Unity™ 480/480F, 680/680F, 880/880F

Quick Start

Before you begin

- ☐ Create a Dell Online Support account: Dell Support. You will need this account later in the installation process to activate software licenses and configure Secure Remote Services.
- ☐ The following features are available in Unity OE version 5.5.3:
  1) Dynamic licensing allows you to connect to and refresh Unity licenses directly from the graphical user interface (GUI) without the need to upload a license file.
  2) If you already have a Unity system, Unisphere enables you to click "Register and Connect License" to change from file-based licensing to Dynamic Licensing. If your Unity system is new, you can get your license by clicking the same button.
  3) After you transition to Dynamic Licensing, you cannot revert to XML/FLX file-based licensing.
  4) FLX-based licensing is no longer supported beginning with version 5.5.3. See the Dell Dynamic Licensing Portal User Guide for more detailed information.
- ☐ Obtain the help of a second person to install the enclosure into the rack or use a mechanical lift.
- ☐ If you have more than one enclosure to install, use the Unity 480/480F, 680/680F, 880/880F Installation and Service Guide to complete your installation. The guide includes racking and cabling instructions required for additional enclosures, which are not covered here. The Unity 480/480F, 680/680F, 880/880F Installation and Service Guide is located on http://bit.ly/unityinfohub
- ☐ Download the Connection Utility at http://bit.ly/unityinfohub. You need this utility to assign static IP addresses to your system. You do not need this utility if you plan to use DHCP to automatically assign IP addresses to your system.
- ☐ See the *What's next* section for important details about adding enclosures and using Unisphere Online Help.

Purpose of this document

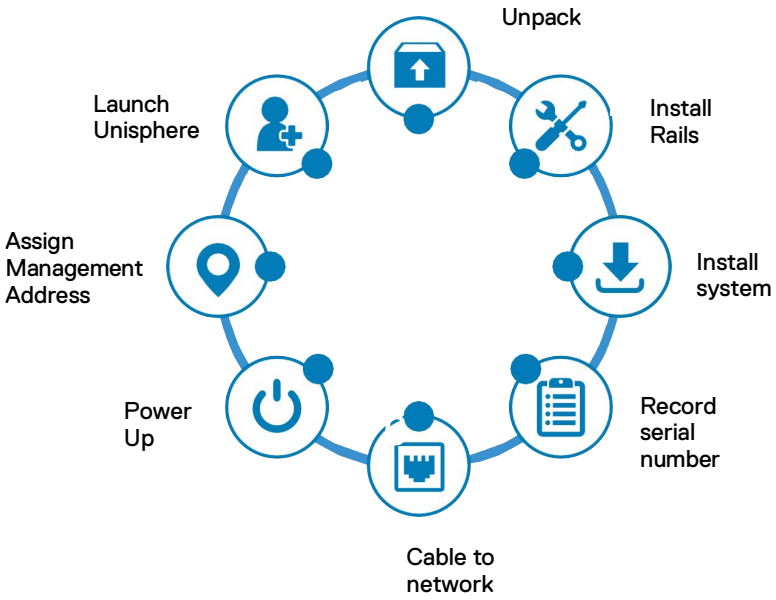

UNITY

Copyright © 2026 Dell Inc. or its subsidiaries. All Rights Reserved. Dell, EMC, Dell EMC and other trademarks are trademarks of Dell Inc. or its subsidiaries. Other trademarks may be trademarks of their respective owners.
P/N 300-015-628 Rev 02

1. Unpack your system

If your Unity system arrives pre-racked, begin installation at Step 4 of this guide.

Verify that you have the following components:

- ☐ 2U Disk Processor Enclosure (DPE) (1)
- ☐ Rails (2)
- ☐ Power cables (2)
- ☐ Bezel (1)
- ☐ Electrostatic discharge clip (1)

You will also need a minimum of two Cat 5 or better Ethernet cables.

2. Install the rails

When installing the rails, ensure that the rail pins are lined up correctly:

- For the front end of the rail, the bottom pin of the rail goes through the middle hole of the lower U, and the top pin goes through the top hole of the upper U.
- For the rear end of the rail, the bottom pin of the rail goes through the bottom hole of the lower U, and the top pin goes through the top hole of the upper U.

1. Position the rail so the label FRONT is located at the front of the rack and facing towards the inside of the rack, while orienting the rear of the rail to align level with the holes on the rear of the rack.
2. From the rear of the rack, pull the rail straight back until the latch is locked.
3. To install the front of the rail, press the blue latch release button until the latch rotates open.
4. Pull the rail forward until the pins slide into the holes on the front of the rack, then release the latch to secure the rail in place.
5. Repeat for the other rail.

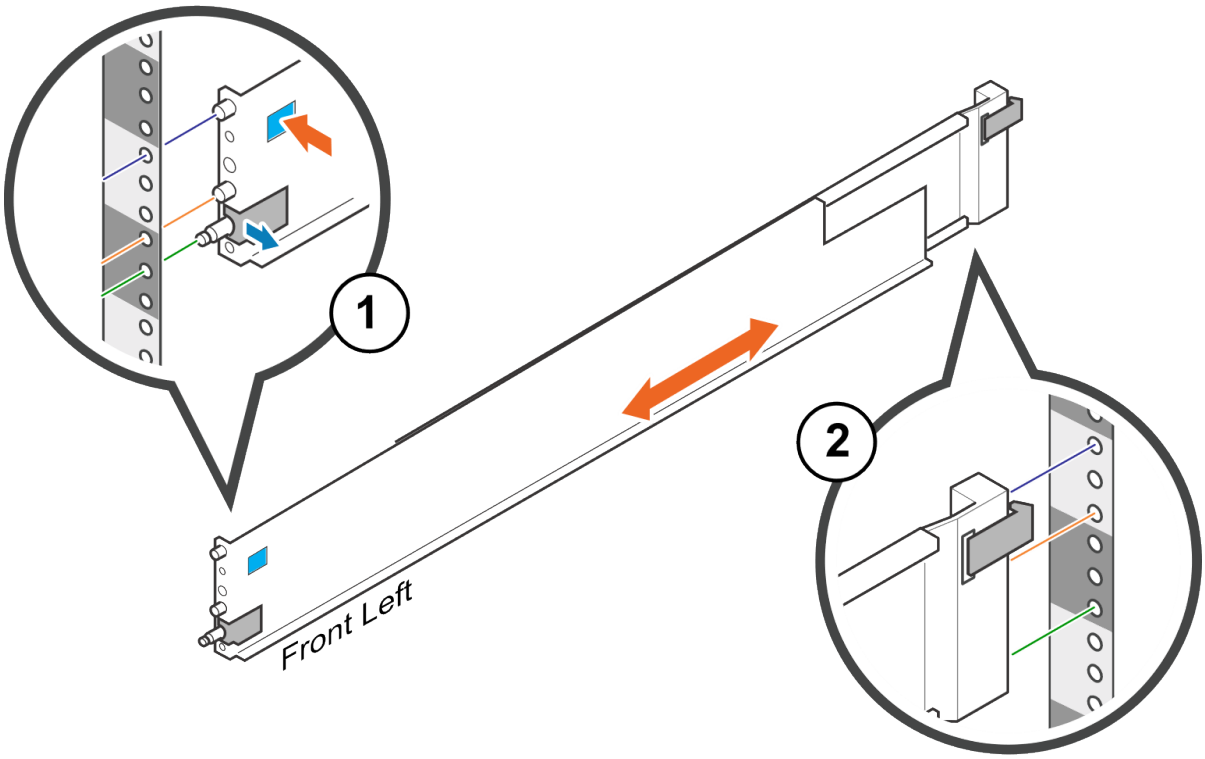

3. Install the system onto the rails

⚠ CAUTION

The enclosure is heavy and should be installed into or removed from a rack by two people. To avoid personal injury and/or damage to the equipment, do not attempt to lift and install the enclosure into a rack without a mechanical lift and/or help from another person.

1. From the front of the rack, slide the enclosure onto the rails.
   Ensure that the enclosure is flush with the front of the rack, fully seated in the cabinet, and does not easily slide out.

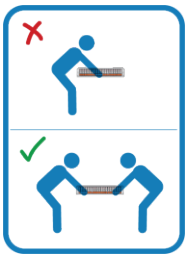

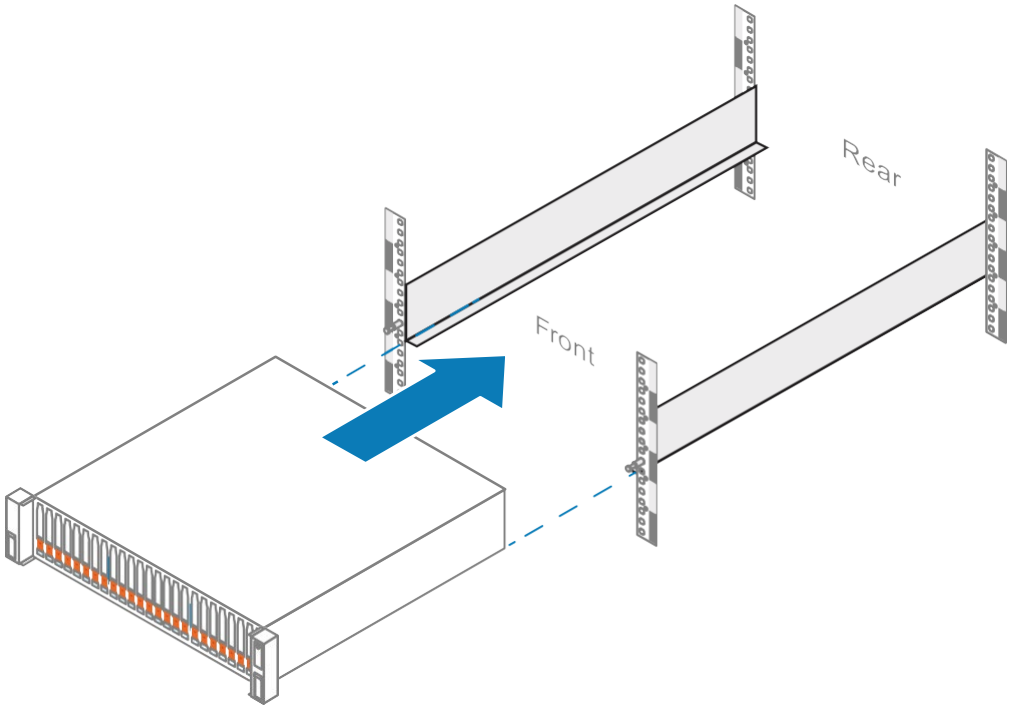

2. (Optional) If securing the system for shipment in the cabinet or for other unstable environments,
   a. Locate the captive screw under each latch and tighten to the front of the cabinet using a #1 Phillips screwdriver.

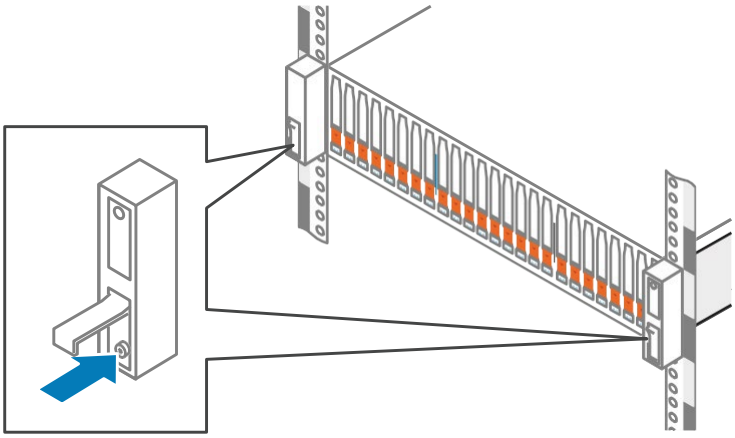

4. Record your system serial number

Locate and record the product serial number tag from the black tag on the front of the DPE. You will use this number to obtain product licenses later in the installation process:

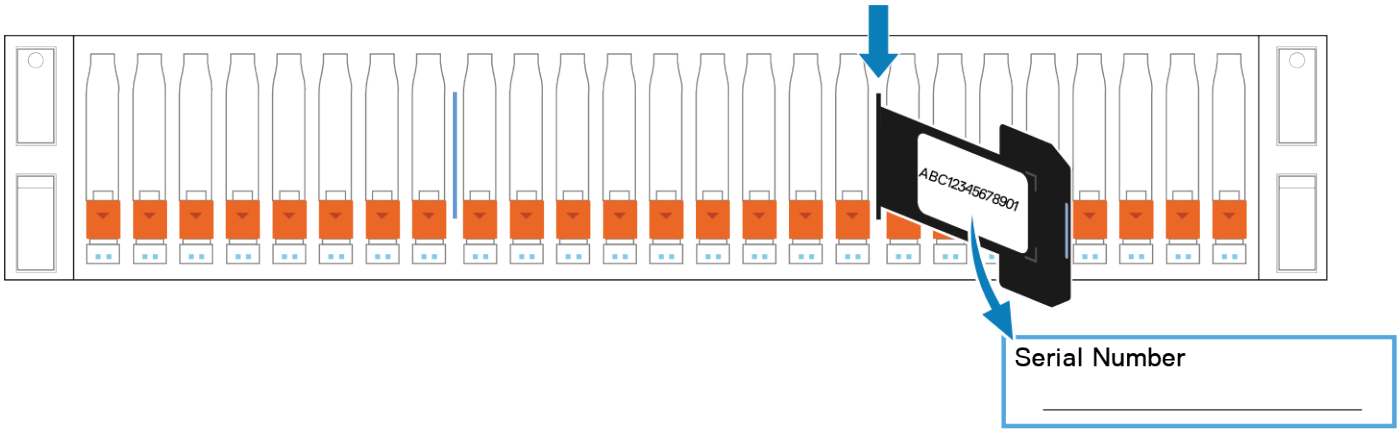

5. Cable the system to the network

Connect two Cat 5 (or better) Ethernet cables from your local network (LAN) to the RJ45 management ports at the rear of the system.

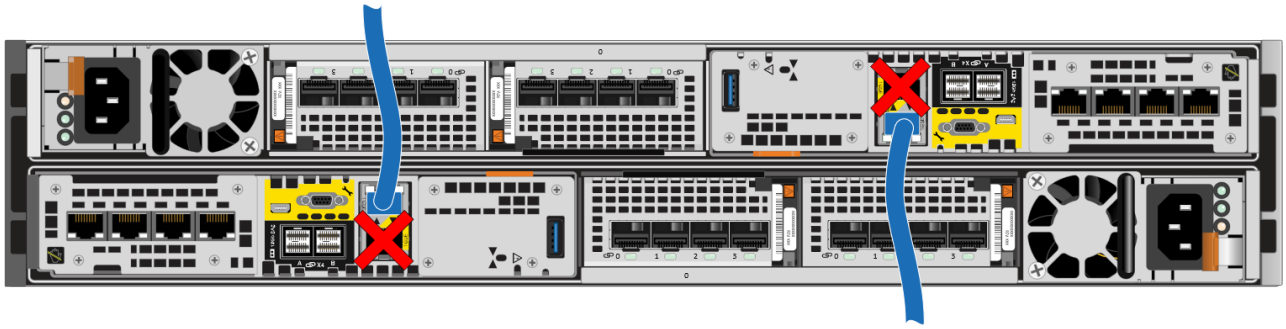

6. Power up

1. Verify that the cabinet's circuit breakers are in the ON position and power is connected to the cabinet.
2. Connect each DPE power cable to the system power component and to the PDUs.

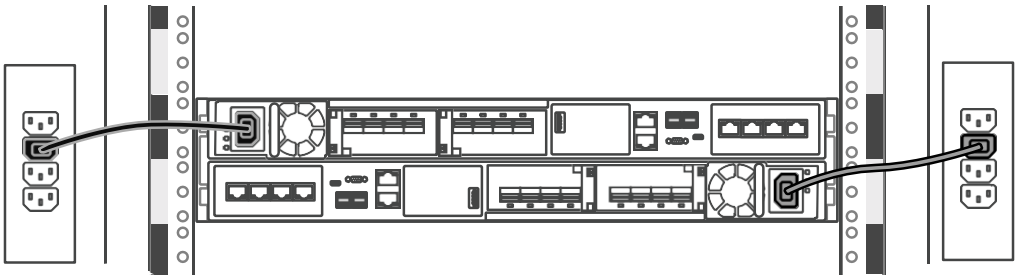

3. Insert the power cables and secure each cable to the system component with the cable clip. After you plug in the power cables, the system immediately powers on.

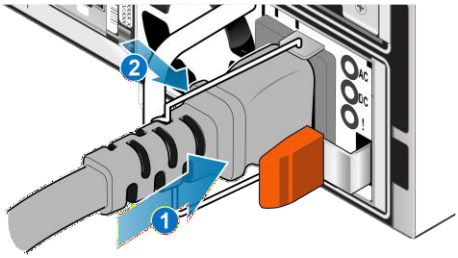

4. Ensure that the service processor LEDs display the correct condition before continuing with system initialization. The service processor power light (1) should be green, and the service processor fault light (2) should be solid blue or alternating blue and amber in three second intervals.

   The initial system boot could take 15-60 minutes to complete, depending on factory configuration.

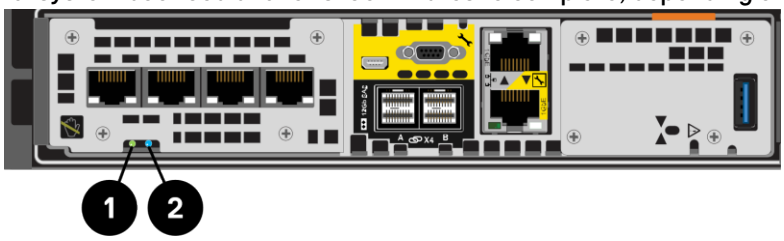

7. Assign a management address

Before you can configure and manage the Unity system, you must assign a network address to it.

Note: It can take the Connection Utility 10-15 minutes to recognize and populate the serial number.

Note: Disable any security software running on your workstation that may prevent the initialized system from being detected.

There are two ways to assign a management address:

- **Assign a static address to the system**. Download and install the Connection Utility software. Then, run the Connection Utility on a computer with access to the subnet where you installed your Unity system. The Connection Utility requires the following:
  - Your system serial number, which identifies the system on the network.
  - The system IP address. Obtain an IP address from your network administrator.
  - Subnet mask.
  - Default gateway.
- **Allow the system to dynamically acquire an IP address by using DHCP**. If DHCP is supported on your network, the Unity system automatically obtains a network address when you power it up. Check with your network administrator about DHCP availability on your network.

8. Launch the Unisphere Initial Configuration Wizard

The Initial Configuration Wizard walks you through the steps to install licenses, configure network settings, create pools, manage alerts, define support options, configure network interfaces, and create NAS servers.

1. Complete the *Configuration Worksheet*. The worksheet is available at the end of this document.
2. Access the Unisphere management application.
   - If you manually configured the system with the Connection Utility, click **Launch Unisphere**, or open a web browser and enter the IP address that you assigned to the Unity system.
   - If the system automatically acquired an IP address through DHCP, enter the Unity system serial number and its network domain in the browser's address bar as follows:
     Sample URL: FM100000000017.mylab.xyz.com

     Note: If you receive a certificate error when trying to access Unisphere, refer to your internet browser instructions to either bypass the error or to install the self-signed array certificate. For more details about your system certificate, refer to the *Dell Unity Family Security Configuration Guide.*

   - License your system:
     - The Unisphere Initial Configuration Wizard automatically takes you to SW Licensing Central.
     - Register, activate, and download your license files as described on SW Licensing Central.
     - Install licenses on your array using the Unisphere Initial Configuration Wizard.

What's next?

- ☐ Use the Unisphere Online Help to further guide you through the configuration process.
- ☐ If you need to add disk array enclosure (DAEs) to the system at a later time, use the *Installing an Optional Disk Array Enclosure* (15- or 25-drive) guide at http://bit.ly/unityinfohub_cru

Other languages

You can access localized versions of this and other documents at dell.com/unitydocs.
您可以在 www.dell.com/support上访问本文及其他文档的本地化版本。
Локализованные версии этого и других документов можно найти на веб-сайте dell.com/support.
Você pode acessar versões localizadas deste e de outros documentos em dell.com/support.
본 문서 및 기타 문서의 한국어 버전은 dell.com/support 에서 이용할 수 있습니다.
このドキュメントおよびその他のドキュメントの日本語版は、dell.com/support からご覧いただけます。
Des versions traduites du present document et d'autres documents sont disponibles sur le site dell.support.com.
Puede obtener acceso a versiones traducidas de este y otros documentos en dell.com/support.
Lokalisierte Versionen dieses Dokuments und anderer Dokumente finden Sie unter dell.com/support.

Configuration worksheet

Collect and record information for configuring the system with the following:

- Connection Utility
- Unisphere Initial Configuration wizard

This worksheet should be used with the Connection Utility and Unisphere Online Help for an installation overview and additional guidance for setting up the Unity system.

Note: Sites with restricted Internet access must download the *Connection Utility* software and obtain product license keys in advance of configuring the system. Go to the Unity Info Hub at http://bit.ly/unityinfohub for detailed instructions.

	System management address	
Connection Utility	**Name**: If you obtained the system's IP address through DHCP, use the system serial number for the name. **Note:** You cannot use DHCP if you plan to enable ESRS.	
	Management IP Address: Management IPv4 and/or IPv6 address to assign to the storage system.	
	Subnet Mask: (IPv4 only) IP address mask that identifies the range of IP addresses in the subnet where the storage system is connected.	
	Gateway: Default gateway IP address of the storage system management interface.	
	Prefix Length (IPv6 only): The number of significant bits in the address that will be used for routing purposes.	
Unisphere	**Unisphere login information**: When logging into Unisphere for the first time, use the default system account username and password.	**User**: admin **Password**: Password123#
	Initial Configuration Settings	
	☐ Accept the license agreement and specify new administrator and service account passwords.	

(continued on the next page)

Configuration Wizard

The following sections are OPTIONAL	
Domain Name System (DNS) servers (manual configuration) Network name or IP address of one or more DNS servers. **Note:** A DNS server is required for EMC Secure Remote Services (ESRS).	
Network Time Protocol (NTP) Server Network name or IP address of one or more NTP servers. **Note:** An NTP server must be configured before you can create a NAS server with SMB shares that use Windows Active Directory (required for multiprotocol, also recommended for virtual volumes). It is also recommended that you configure an NTP server on both systems in order for the replication feature to work correctly.	
☐ Obtain your license file online and upload your license file.	
Alert Email and SMTP Settings	
Enter the email addresses to which alerts should be sent, set the severity level for these alerts, and configure an SMTP server.	
Proxy Server	
Proxy Server credentials (optional) Select the type of protocol and enter the IP address and credentials for the proxy server.	
☐ Configure FAST Cache and Pools	
☐ Enter Support Credentials	
☐ Specify Contact Information	
☐ Configure EMC Secure Remote Services (ESRS)	
☐ Create iSCSI Network Interfaces	
☐ Create NAS servers (if supported)	

Scan the QR code below for troubleshooting, how-to information, and setup videos.

