ergotron®

mosaic™

Mobile Workstation
Powered (AC or DC), LCD

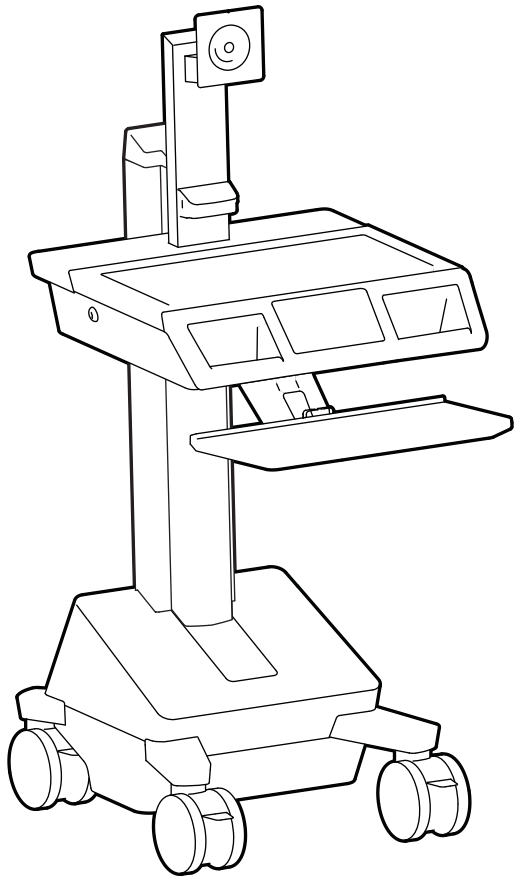

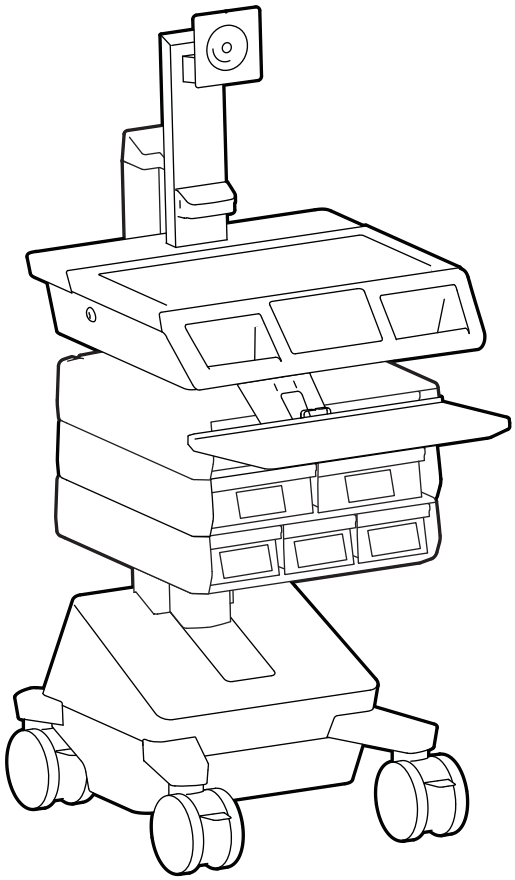

Includes
Constant Force™
Technology

Mosaic™ powered carts provide electrical power for mobile point of care computing equipment in a healthcare environment. The carts are not intended to power medical products or devices. Outlets are provided to power information technology equipment only such as computer equipment and computer peripherals.

English

For the latest User Installation Guide please visit: www.ergotron.com
English, Español, Français, Deutsch, Nederlands, Italiano, Svenska, Polski, عربي

www.ergotron.com | USA: 1-800-888-8458 | Europe: +31 (0)33-45 45 600 | China: 400-120-3051 | Japan: japansupport@ergotron.com

888-25-019-G-00 rev. D • 08/26

Table of Contents	page
Safety	2 - 4, 23 - 25
Ergonomics	4
Getting to Know Your Cart	5
Specifications	6
Set-up	7 - 20
Adjustment	11, 12, 19
Drawers	20
Change Batteries	21 - 22
Cart Storage	23
Cleaning and Maintenance	25
Specifications	26 - 27
Touch Screen Control Panel	Refer to Software User Guide for instructions

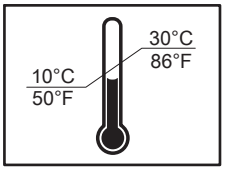

Operational Temperature Range

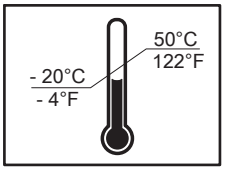

Storage Temperature Range



Relative Humidity Range
Atmospheric Pressure: 50 kPa to 106 kPa

Software User Guide:
https://www.ergotron.com/guide/mosaic

Safety

Hazard Symbols Review

These symbols alert users of a safety condition that demands attention. All users should be able to recognize and understand the significance of the following Safety Hazards if encountered on the product or within the documentation. Children who are not able to recognize and respond appropriately to Safety Alerts should not use this product without adult supervision!

Symbol	Signal Word	Level of Hazard
	INSTRUCTIONS	Refer to instruction manual/booklet. Follow instructions for use.
	CAUTION	A CAUTION indicates either potential damage to hardware or loss of data and tells you how to avoid the problem.
	WARNING	A WARNING indicates either potential for property damage, personal injury, or death.
	DANGER	A DANGER indicates a hazardous situation that, if not avoided, will result in death or serious injury.
	DO NOT PUSH	Do Not push any part of cart other than the handle, cart may tip. Follow 'Moving' instructions in 'Safety' section.
	DO NOT SIT	Do Not sit on cart. Doing so may cause property damage and/or personal injury.
	DO NOT STAND	Do Not stand on cart. Doing so may cause property damage and/or personal injury.
	DISCONNECT POWER	Remove power cord from wall power outlet.
	WEEE	WEEE
	THIS SIDE UP	Do not tip on side or upside down.

888-25-019-G-00 rev. D • 08/26

Safety

Safety Alerts Associated with this Product
The following Warnings/Cautions appear in this reference guide or on the cart:
NOTE: Failure to adhere to these guidelines may result in equipment damage or personal injury.
CAUTION: The lift brake helps stabilize the worksurface and keyboard tray during normal use but it DOES NOT increase load capacity. DO NOT load riser with equipment totaling more than the maximum weight capacity specified by Ergotron. Ensure optimum lift function by testing and if necessary, re-adjusting tension whenever the weight mounted to the riser changes (i.e., equipment is removed or added). See "Set Riser Lift Tension" adjustment instructions.
CAUTION: Do not operate Cart with missing or damaged components! Do not remove, modify or substitute Cart components without consulting Ergotron. If you encounter problems with Cart installation or operation, contact Ergotron Customer Care.
CAUTION: DO NOT overtighten fasteners. Overtightening may cause damage to your equipment.
WARNING: Stored Energy Hazard: The worksurface lift mechanism is under tension and will move up rapidly, on its own, as soon as attached equipment is removed. For this reason, DO NOT remove equipment unless the worksurface has been moved to the highest position on the tower! Failure to follow this instruction may result in serious personal injury and/or equipment damage! When Shipping the cart, set the worksurface lift mechanism to the lowest tension setting.
CAUTION: DO NOT loosen, tighten or remove any other nuts or bolts on the riser or top of tower. Tampering with nuts or bolts may result in an unstable Cart, leading to equipment damage and/or personal injury.
CAUTION: Release Lift Brake before moving work surface! Moving work surface while Lift Brake is engaged may cause serious damage to Lift Engine.
WARNING: In the event that repair of the Cart is needed, contact Ergotron Customer Care immediately. Cart repair can only be performed by Ergotron, Inc. or by an Ergotron authorized agent.
WARNING: This cart is not intended for use in a flammable, anesthetic mixture or oxygen rich environment.
NOTE: No user serviceable parts. Repairs and/or upgrades are to be performed only by an authorized service provider.

WARNING: In rare cases, if the power system and battery protection features fail, the battery may become overcharged and in some instances it may become extremely hot, possibly melting the plastics and releasing smoke. If a battery begins to smoke or melt:
• Unplug the cart, or if possible disconnect the battery from the power system immediately.
• Move the cart to a well ventilated area.
• Use a Carbon Dioxide, Dry Chemical or appropriate foam fire extinguisher to spray the hot battery.
If a fire extinguisher is not available, use copious amounts of water, or cover the battery with sand.
If exposed to battery contents seek immediate medical attention and follow the below guidelines.
Exposure to vapor released from the battery is irritating to the eyes, skin, mucous membranes and respiratory tract. This may cause nausea, dizziness and headache.
In case of direct contact to the battery's electrolyte:
• Immediately flush eyes with water for at least 15 minutes.
• Thoroughly rinse hands and other affected areas with water.
• Promptly remove and wash any contaminated clothing.
In All Cases, Seek Immediate Medical Attention!

Configuration & Safety
WARNING: To avoid the risk of electric shock, this equipment must only be connected to a supply mains with protective earth.
Position workstation in a manner that does not obstruct or make it difficult to disconnect from external power source.
Walk or look all around equipment prior to moving to ensure it has been completely disconnected.
Additional multiple socket-outlet or extension cord shall not be connected to the Powered Computer Cart.
When used in a Medical Electrical system, connect only equipment that complies with IEC, ISO, UL/ANSI, or CSA standards that are relevant to that equipment.
Risk of shock or personal injury when connecting non-medical equipment supplied as part of a system directly to the wall outlet when non-medical equipment is intended to be supplied by the multiple socket outlet.
Risk of shock or personal injury when connecting any equipment that has not been supplied as part of the Powered Computer Cart to the multiple socket outlet.
WARNING: Use of this equipment adjacent to or stacked with other equipment should be avoided because it could result in improper operation. If such use is necessary, this equipment and the other equipment should be observed to verify that they are operating normally.
WARNING: Use of accessories, transducers and cables other than those specified or provided by the manufacturer of this equipment could result in increased electromagnetic emissions or decreased electromagnetic immunity of this equipment and result in improper operation.
WARNING: Portable RF communications equipment (including peripherals such as antenna cables and external antennas) should be used no closer than 30 cm (12 inches) to any part of the Powered Computer Cart, including cables specified by the manufacturer. Otherwise, degradation of the performance of this equipment could result.



IMPORTANT! This product will need tension adjustments once installation is complete. Make sure all equipment is properly installed on the product before attempting range of motion or tension adjustments. Any time equipment is added or changed on this product resulting in a different mounted weight, you should repeat the adjustment steps to ensure safe and optimum operation. This product should move smoothly and easily through the full range of motion and stay where you set it. If movement is difficult or the product does not stay where you set it, follow the adjustment instructions to loosen or tighten the tension to create a smooth, easy motion. Depending on your product and the adjustment, it may take many turns to notice a difference.



DANGER! Electrical cables can be hazardous. Misuse can result in fire or death by electrical shock.

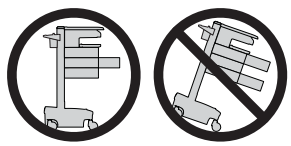

CAUTION: Open only one drawer at a time. Do Not push cart when drawers are open. Failure to follow these instructions may cause the cart to be unstable.

Safety

CAUTION: Failure to follow these instructions may cause the cart to be unstable.

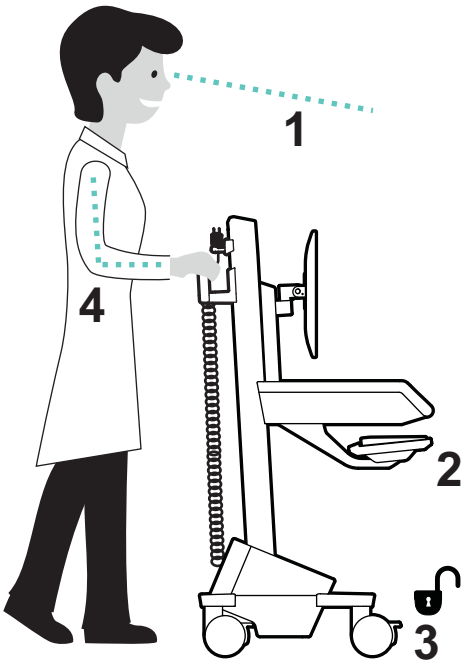

Moving
Stow - before you go

1 During normal movement, release brake and lower worksurface to lowest position for optimal stability and unobstructed view.

2 Tuck away open trays and return mouse, scanner and other accessories to their places.

3 Unlock both front casters.

4 Push cart from rear with elbows bent at about 90° to maximize control and minimize muscle strain.

Ergonomics

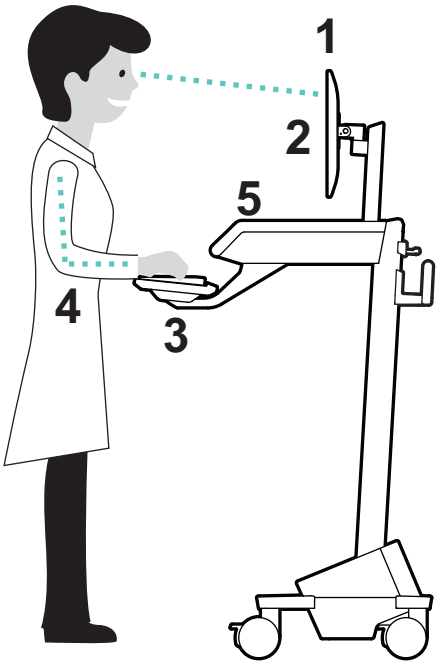

Working
Customize - to your size

1 Set top of monitor screen about one inch below eye level - Release brake and lift or lower riser as needed.

2 Tilt screen for comfortable viewing and to reduce eye and neck strain.

3 Pull keyboard tray forward and position mouse tray on right or left, as needed.

4 Work with elbows bent at about 90° to minimize muscle strain.

5 If the riser moves up and down with difficulty, or if it drifts out of set position, consult the product manual for adjustment information.

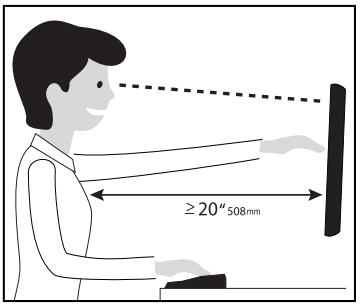

Learn more about ergonomic computer use at:
www.ergotron.com/ergonomics

888-25-019-G-00 rev. D • 08/26

Getting to Know Your Cart

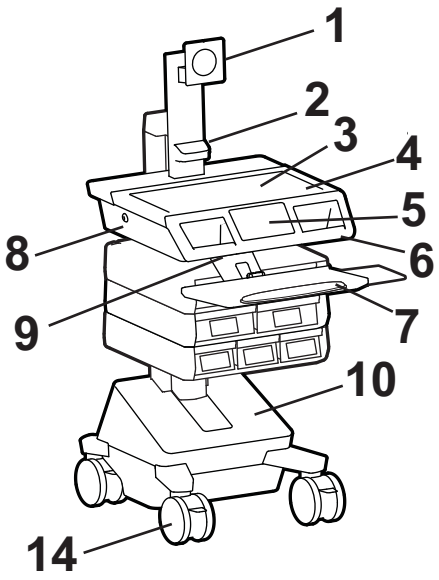

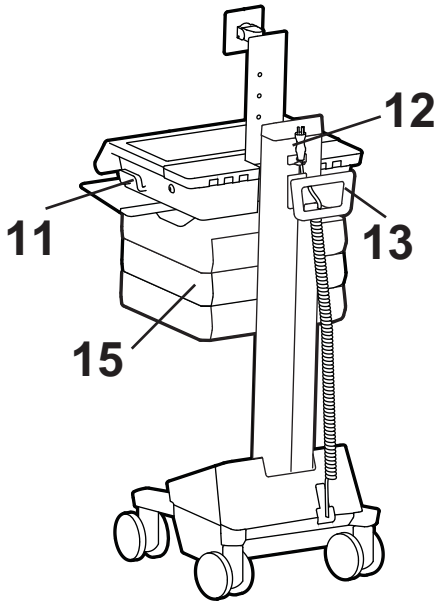

1. LCD Mount for LCDs or Tablet PC's with 75x75 or 100x100 mm Mounting Interface Provides Lift, Tilt, Pan, and P/L Rotation, with option to: lock Lift and lock P/L Rotation
2. Worksurface light with USB charging port
3. Worksurface with removable document cover
4. Badge Scanning location for customer supplied RFID
5. Touch Screen Control Panel Controls all Lights, Power System on/off, Displays Battery Charge Levels, and provides Low Battery Charge warning. Refer to Software User Guide for instructions.
6. Front Handle
7. Keyboard Tray, mouse pouch, and Wrist Rest. Slides Out, Pans, and Allows for Right or Left Mousing
8. Secure Storage for CPU, Cable Management, Excess Cables, 3 Port USB Hub, 4 Power Cord Receptacles for AC or 3 Channels for DC, and Removable Top/Worksurface
9. Keyboard Lights
10. Internal Battery
11. Height Adjustment Brake Release
12. Power Cord and Hook
13. Rear Handle
14. Four Locking Casters with one 3 Function Caster - Locks Swivel or Rotation and Swivel
15. Optional Auto-Lock Drawers

The cart and power system are certified to ANSI/AAMI ES60601-1 and CAN/CSA-C22.2 No. 60601-1
The cart and power system are compliant with EN 60601-1-2 4th edition

Part Number	Power System
M1XX-XXXX-XXXXXX-X-1	Input: 120V~, 60Hz, 5.0A Output: 120V~, 60Hz, 150W, 150VA
M1XX-XXXX-XXXXXX-X-2 M1XX-XXXX-XXXXXX-X-3 M1XX-XXXX-XXXXXX-X-4 M1XX-XXXX-XXXXXX-X-C M1XX-XXXX-XXXXXX-X-E	Input: 230V~, 50Hz, 5.0A Output: 230V~, 50Hz, 150W, 150VA
M1XX-XXXX-XXXXXX-X-7	Input: 220V~, 60Hz, 5.0A Output: 220V~, 60Hz, 150W, 150VA
M2XX-XXXX-XXXXXX-X-1 M2XX-XXXX-XXXXXX-X-2 M2XX-XXXX-XXXXXX-X-3 M2XX-XXXX-XXXXXX-X-4 M2XX-XXXX-XXXXXX-X-C	Input: 120-240V~, 50/60Hz, 5.0A Output: 150W Total. 5-24V 5A max per channel

14

3 Function Caster

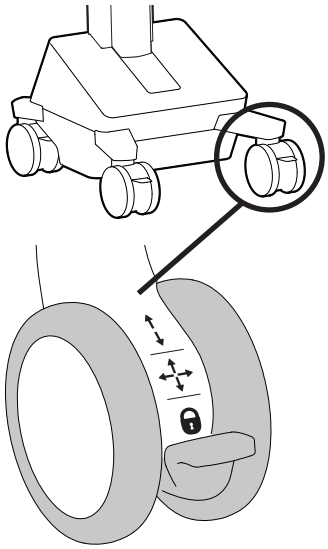

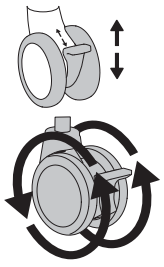

Wheel Rotation

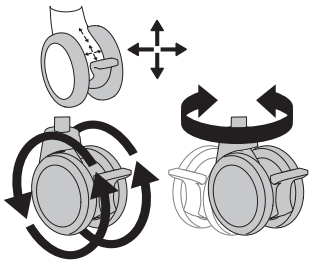

Wheel Rotation and Swivel

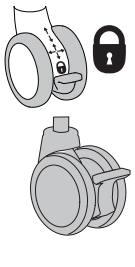

Locked

Specifications

Range of Motion

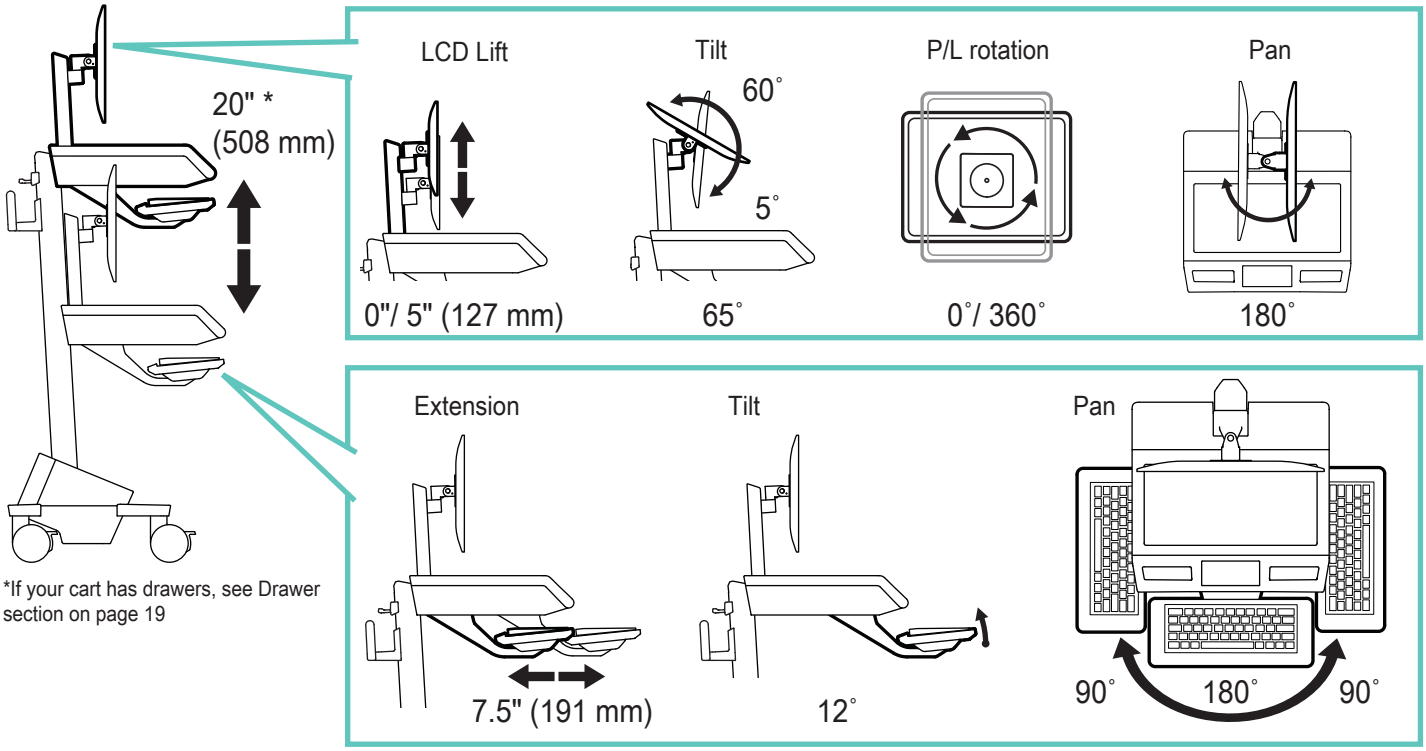

*If your cart has drawers, see Drawer section on page 19

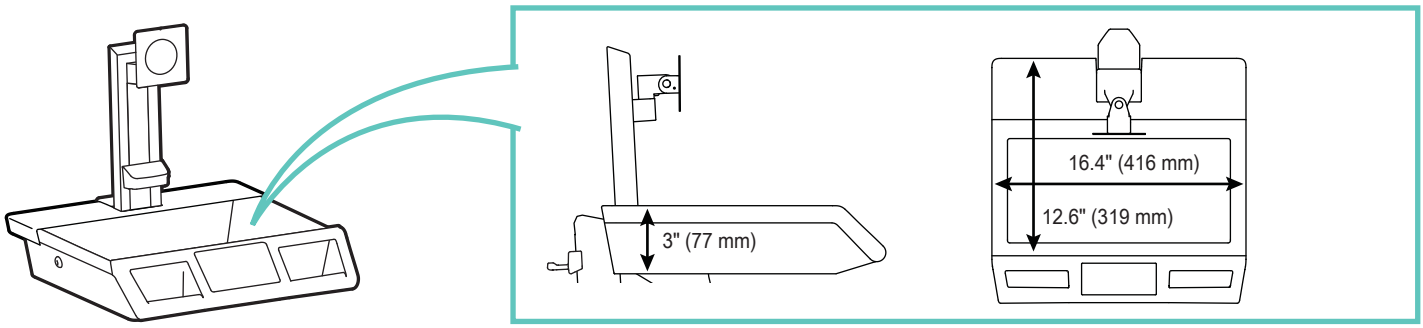

Weight Capacity

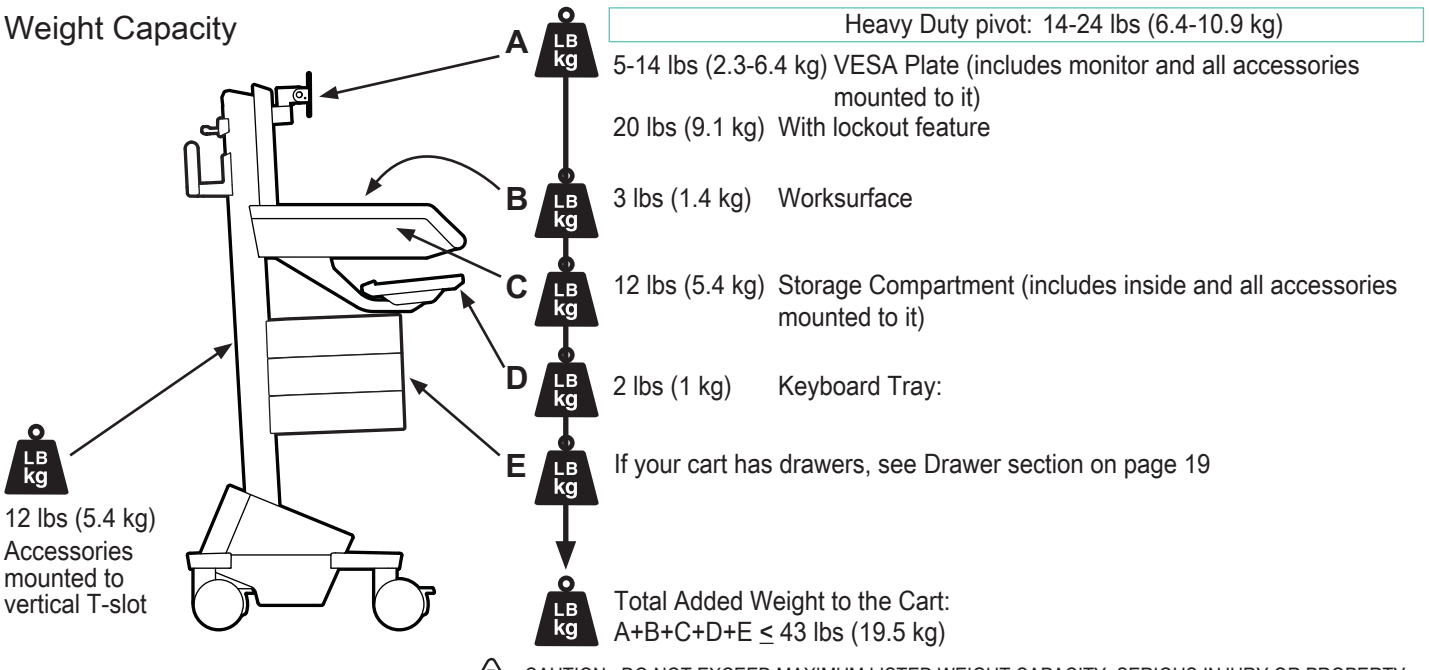

		Heavy Duty pivot: 14-24 lbs (6.4-10.9 kg)
A	5-14 lbs (2.3-6.4 kg)	VESA Plate (includes monitor and all accessories mounted to it)
	20 lbs (9.1 kg)	With lockout feature
B	3 lbs (1.4 kg)	Worksurface
C	12 lbs (5.4 kg)	Storage Compartment (includes inside and all accessories mounted to it)
D	2 lbs (1 kg)	Keyboard Tray:
E		If your cart has drawers, see Drawer section on page 19
		Total Added Weight to the Cart: A+B+C+D+E ≤ 43 lbs (19.5 kg)

CAUTION: DO NOT EXCEED MAXIMUM LISTED WEIGHT CAPACITY. SERIOUS INJURY OR PROPERTY DAMAGE MAY OCCUR!

888-25-019-G-00 rev. D • 08/26

Set-up

Components

	A	B	C	D
1	1x 	3x 	1x 	4x 
2	4x 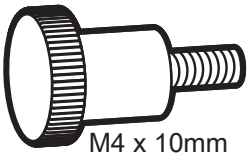	8x 	6x 	2x 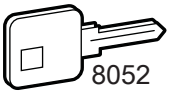
3	4x 	1x 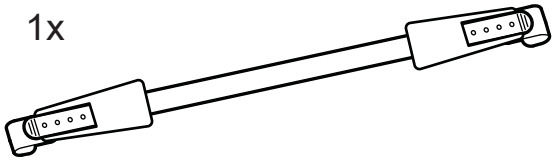		2x for each drawer row 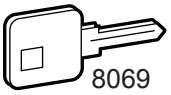
4	For DC powered carts only 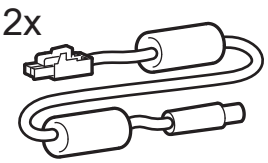 2x 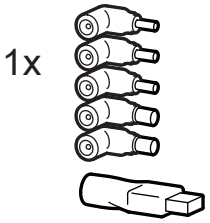 1x			

Tools Needed

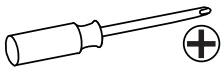
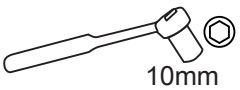

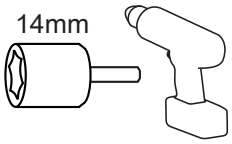

Set-up

1

Plug cart into power outlet and turn cart power on to charge to 100% before use.
Cart does not charge when turned off.

1

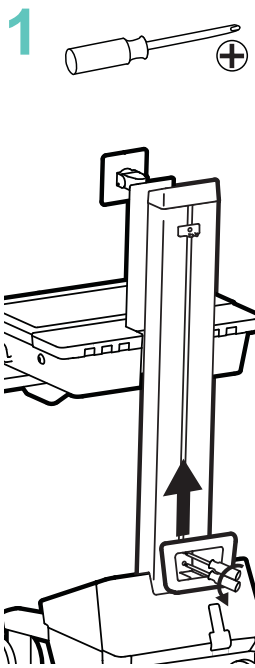

2

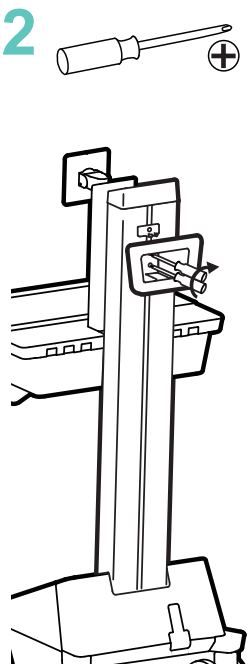

3

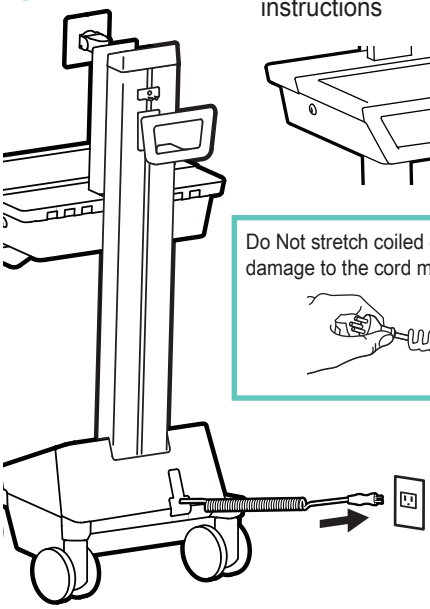

Refer to Software User Guide for instructions

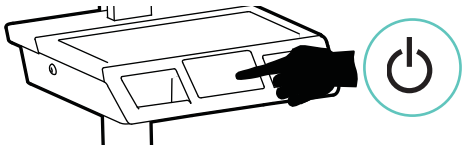

Do Not stretch coiled cord further than 6 feet (1.8 meters), damage to the cord may occur.

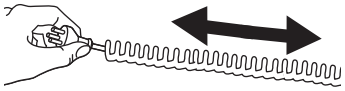

2

1

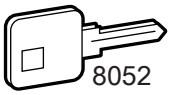

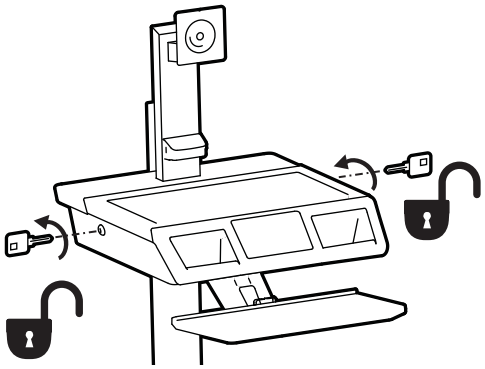

2

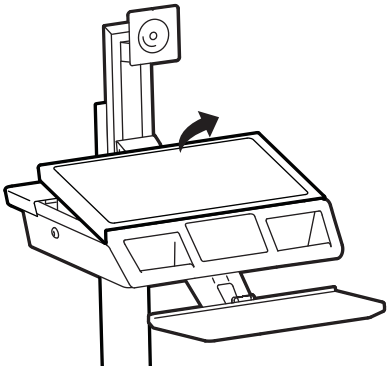

3

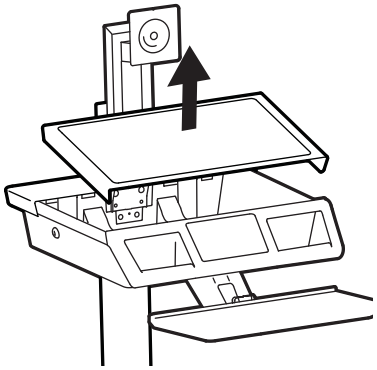

888-25-019-G-00 rev. D • 08/26

3

NOTE: Leave enough slack in cable to allow full range of motion.
Caution: To avoid the potential to pinch cables it is important to follow the cable routing instructions in this manual. Failure to follow these instructions may result in equipment damage or personal injury.

1

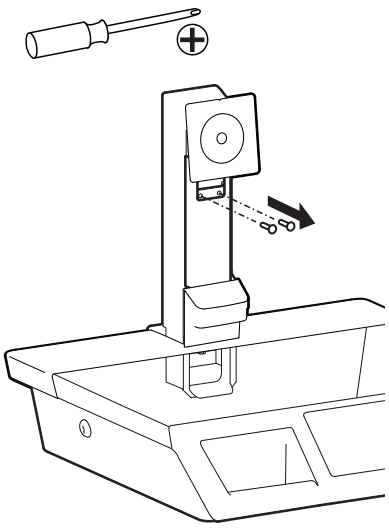

2

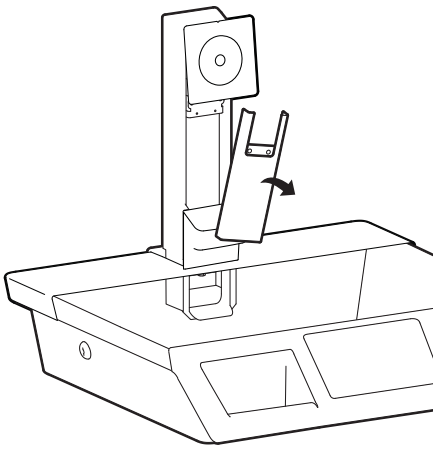

3

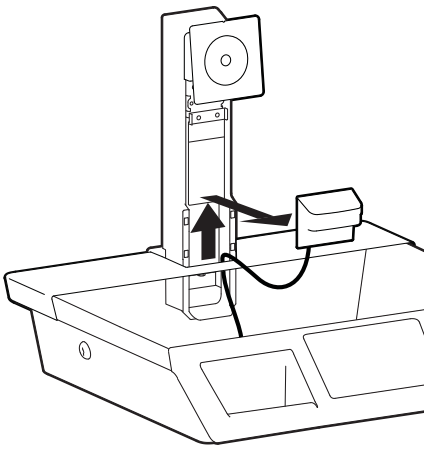

4

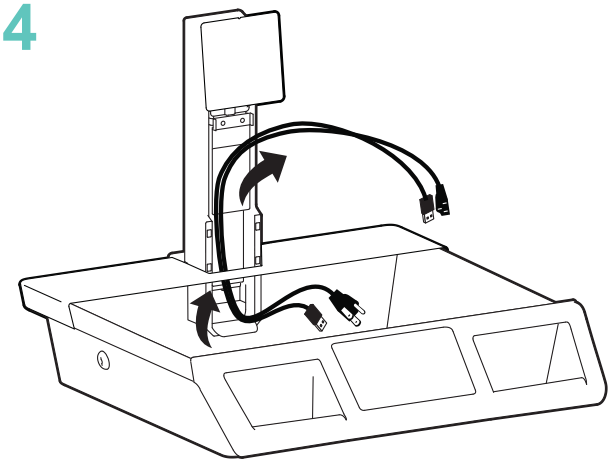

5

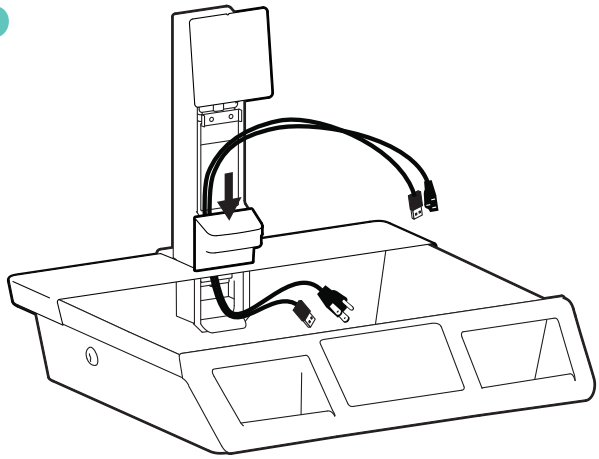

6

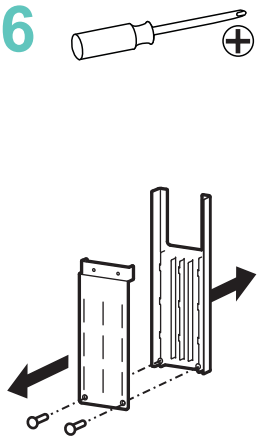

7

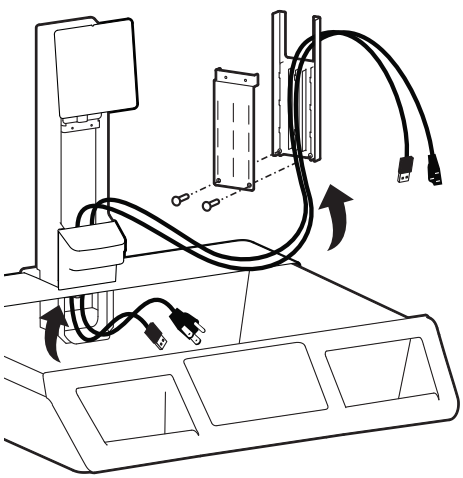

8

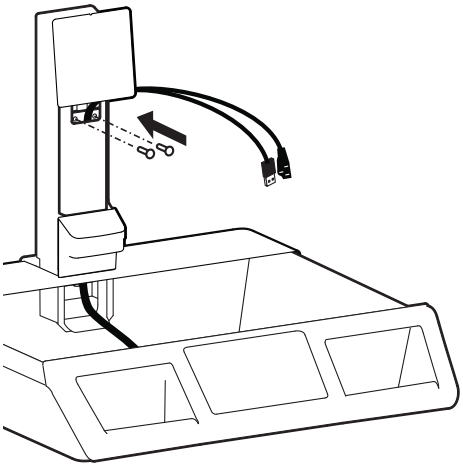

4

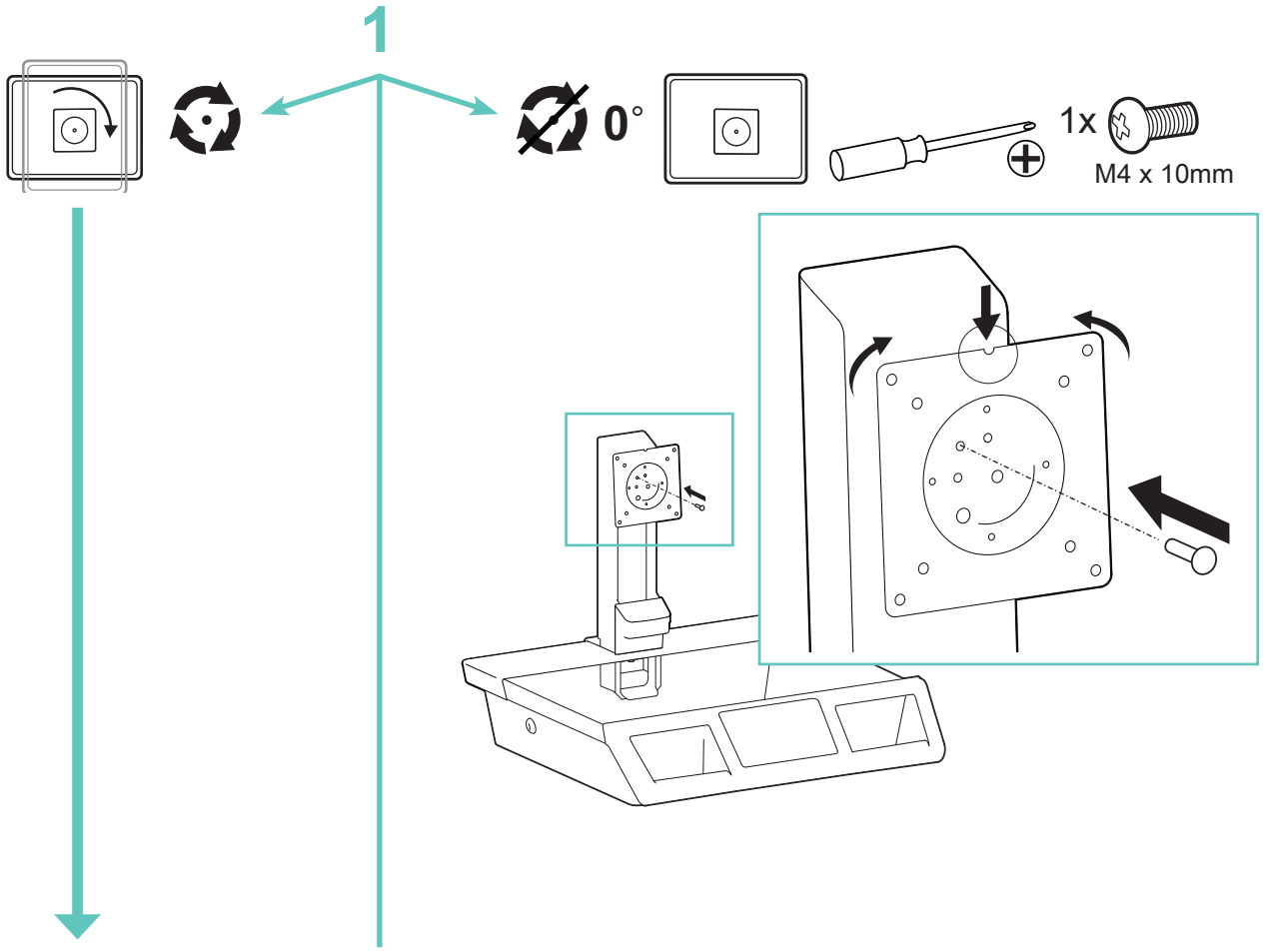
1
0°
1x
M4 x 10mm

2

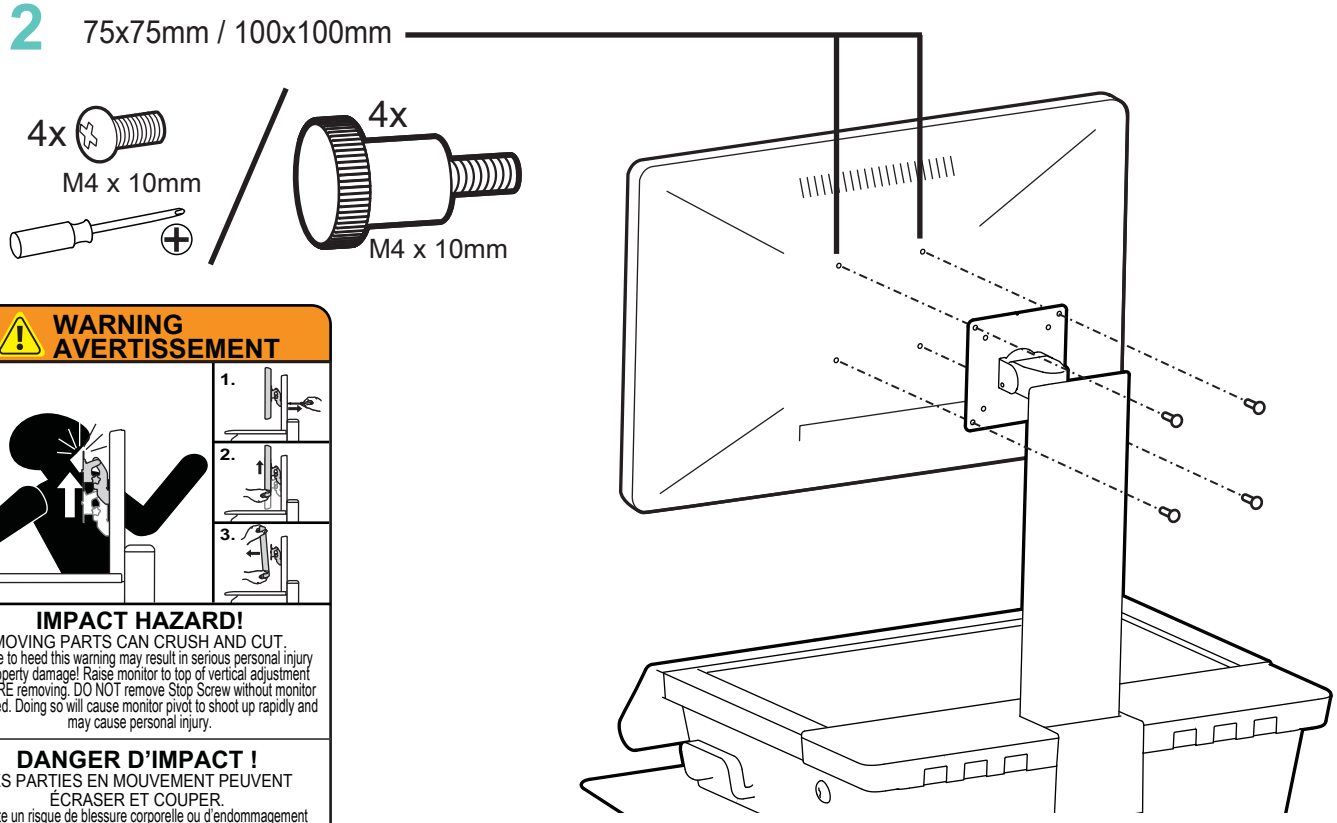
75x75mm / 100x100mm
4x
M4 x 10mm
4x
M4 x 10mm

WARNING
AVERTISSEMENT
1.
2.
3.
IMPACT HAZARD!
MOVING PARTS CAN CRUSH AND CUT.
Failure to heed this warning may result in serious personal injury or property damage! Raise monitor to top of vertical adjustment BEFORE removing. DO NOT remove Stop Screw without monitor attached. Doing so will cause monitor pivot to shoot up rapidly and may cause personal injury.
DANGER D'IMPACT !
LES PARTIES EN MOUVEMENT PEUVENT ÉCRASER ET COUPER.
Il existe un risque de blessure corporelle ou d'endommagement matériel en cas de non respect de cet avertissement.
Élevez l'écran au plus haut de l'ajustement vertical AVANT de le retirer. NE retirez PAS la vis d'arrêt avant que l'écran soit fixé. Dans un tel cas, le pivot d'écran se relèverait rapidement et cela pourrait engendrer des blessures.
www.ergotron.com
830-406

5

Important! You will need to adjust this product after installation is complete. Make sure all your equipment is properly installed on the product before attempting adjustments. This product should move smoothly and easily through the full range of motion and stay where you set it. If movements are too easy or difficult or if product does not stay in desired positions, follow the adjustment instructions to create smooth and easy movements. Depending on your product and the adjustment, it may take many turns to notice a difference. Any time equipment is added or removed from this product, resulting in a change in the weight of the mounted load, you should repeat these adjustment steps to ensure safe and optimum operation.

Lift – Up and down

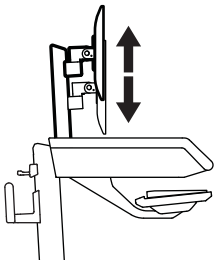

Follow these instructions to tighten or loosen tension.

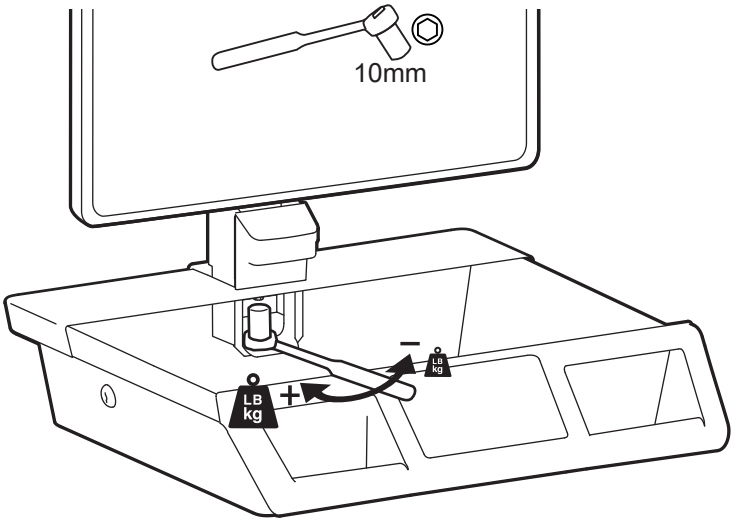

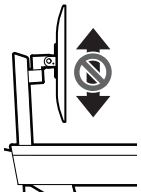

To Stop Independent LCD Lift

For heavier Displays or when using a Tablet PC, you can keep the LCD Lift from moving out of position, by installing this screw into one of the three holes on the back of the riser depending on the desired height.

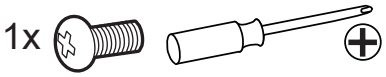

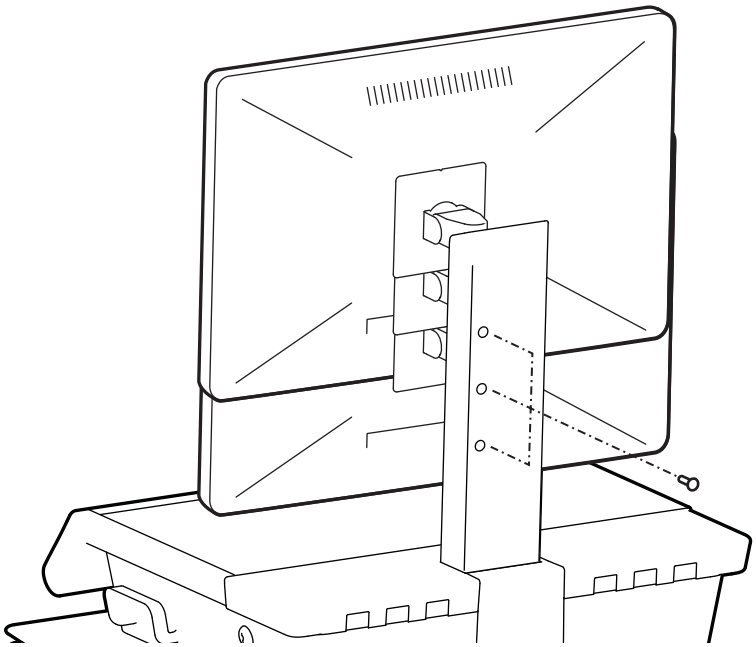



6

Important! You will need to adjust this product after installation is complete. Make sure all your equipment is properly installed on the product before attempting adjustments. This product should move smoothly and easily through the full range of motion and stay where you set it. If movements are too easy or difficult or if product does not stay in desired positions, follow the adjustment instructions to create smooth and easy movements. Depending on your product and the adjustment, it may take many turns to notice a difference. Any time equipment is added or removed from this product, resulting in a change in the weight of the mounted load, you should repeat these adjustment steps to ensure safe and optimum operation.

Tilt – Forward and Backward

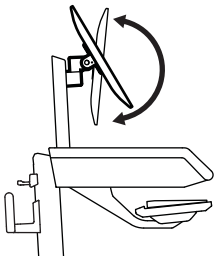



Follow these instructions to tighten or loosen tension.

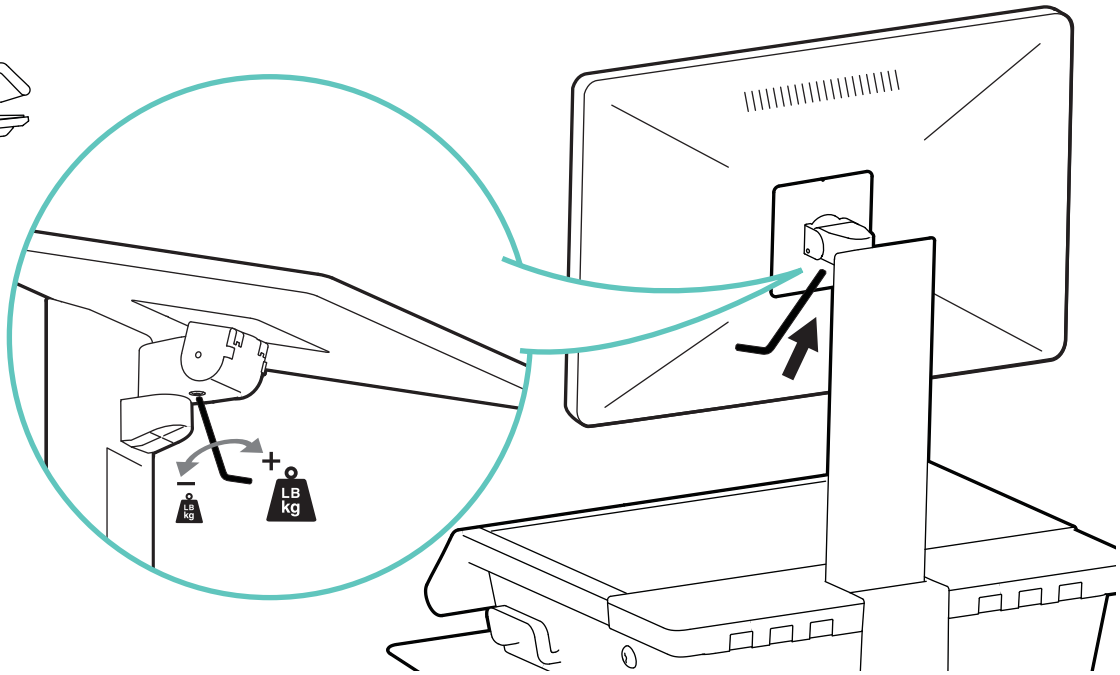

7

1 1x

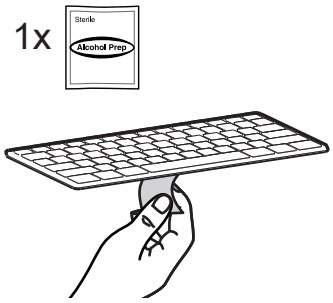

2

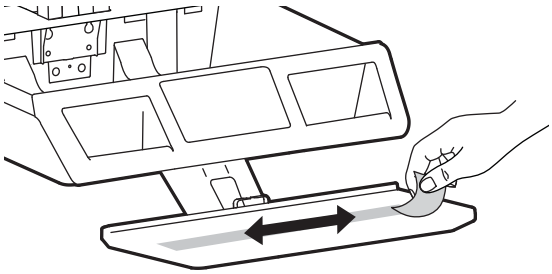

3



Let dry for 60 seconds.

4 4x



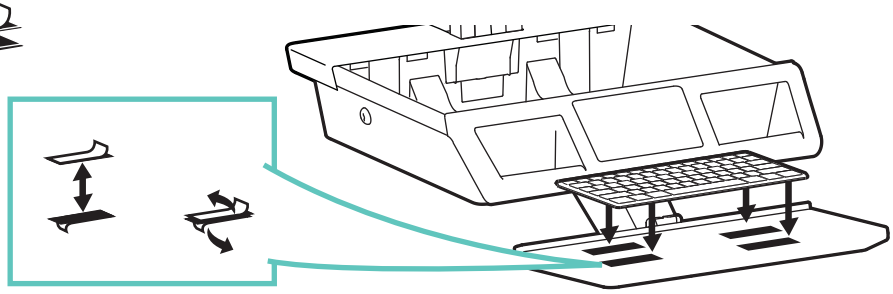

5 1x



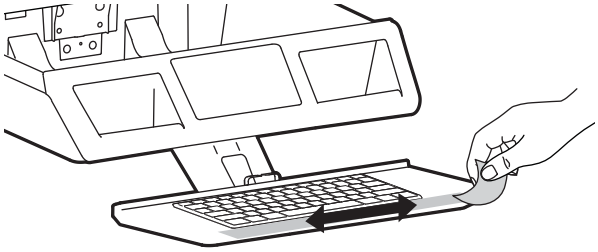

6



Let dry for 60 seconds.

7



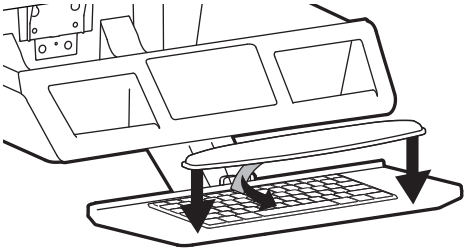

8

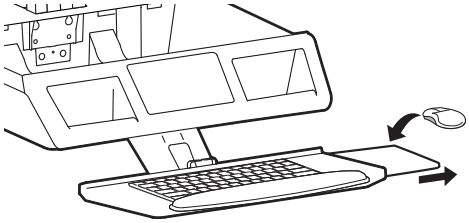

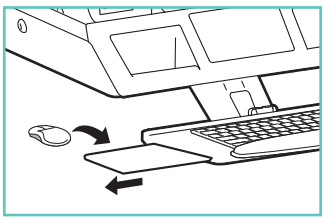

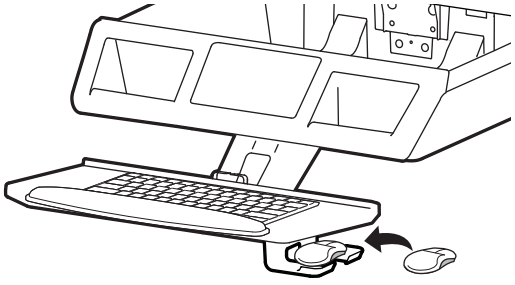

8

1

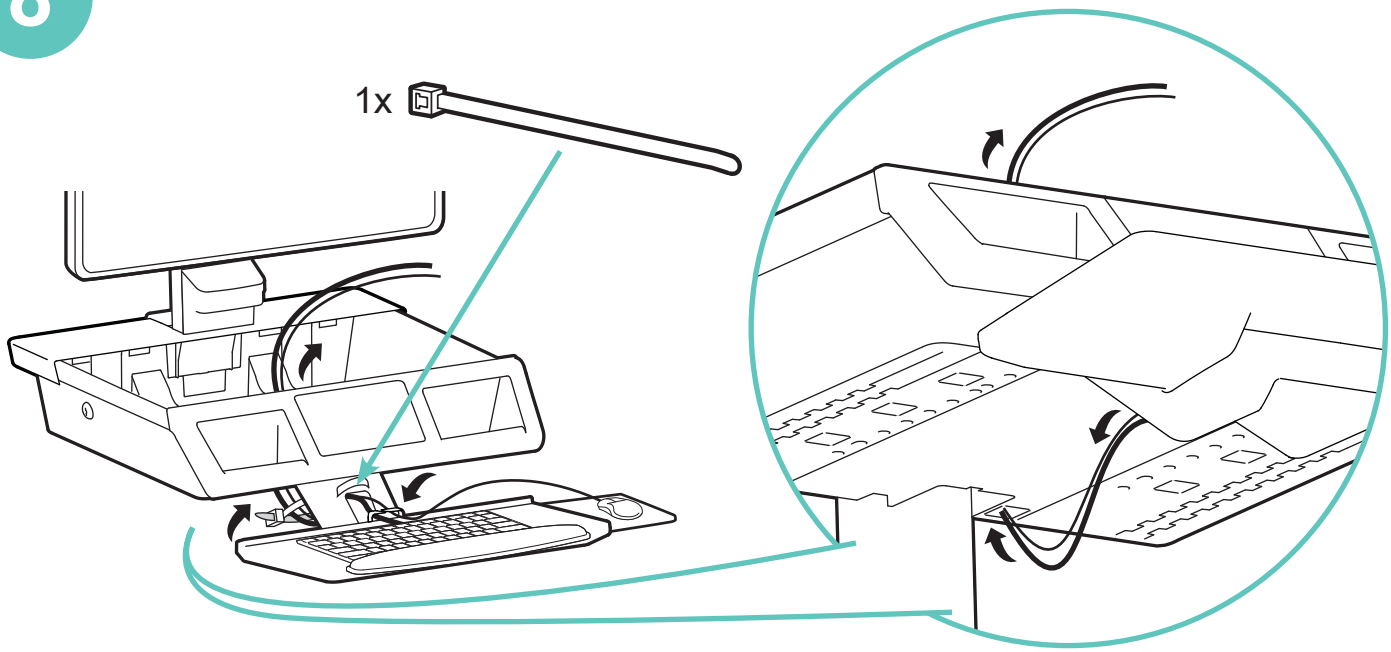

2

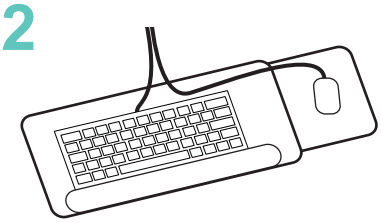

Plug in keyboard and mouse USB cables

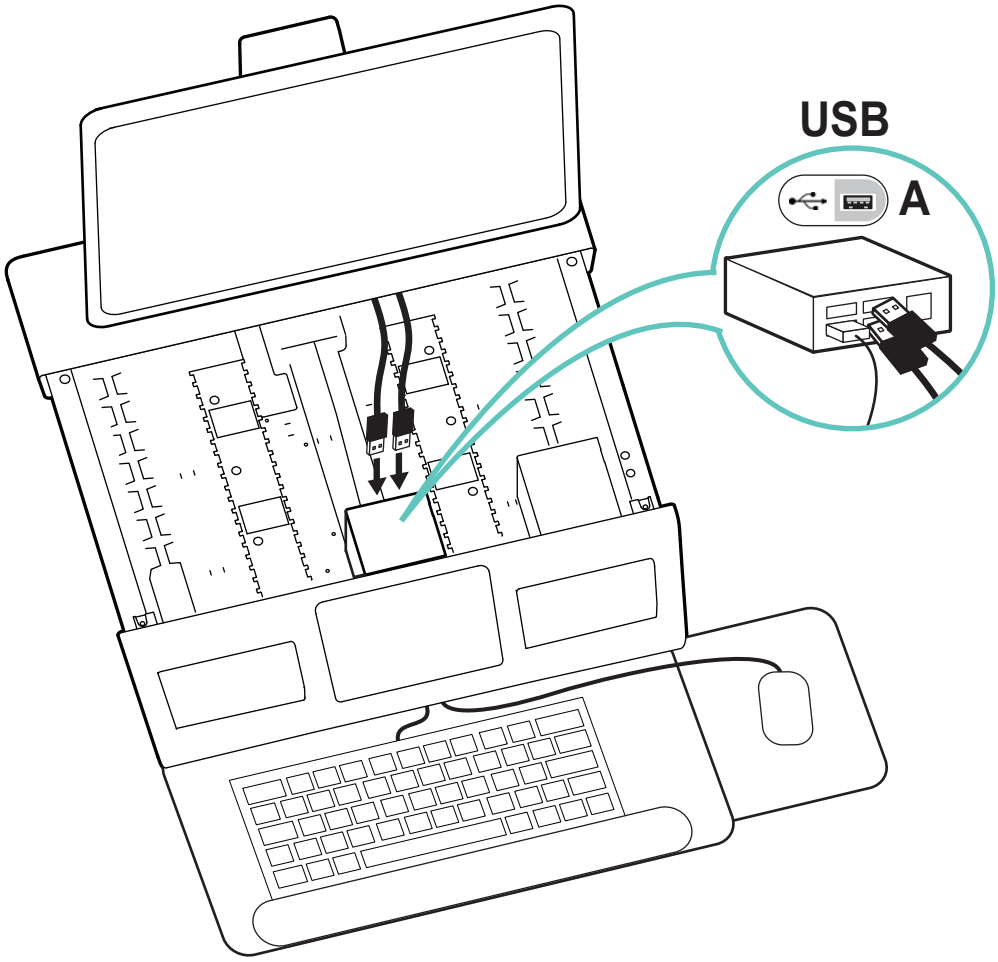

888-25-019-G-00 rev. D • 08/26

Set-up

9 If you are attaching accessories to the back of the cart or under the worksurface, do so now.

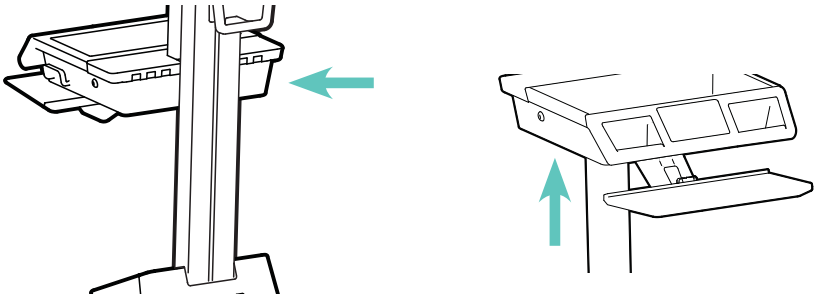

10 Route accessory cables

NOTE: Leave enough slack in cable to allow full range of motion.

Caution: To avoid the potential to pinch cables it is important to follow the cable routing instructions in this manual. Failure to follow these instructions may result in equipment damage or personal injury.



AC accessory power cable

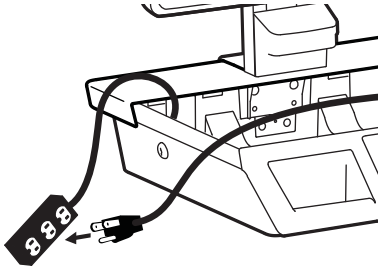

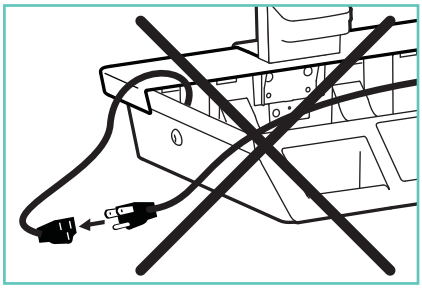

DC accessory power cable

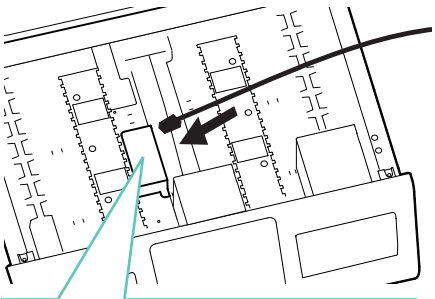

AUX: power for accessories

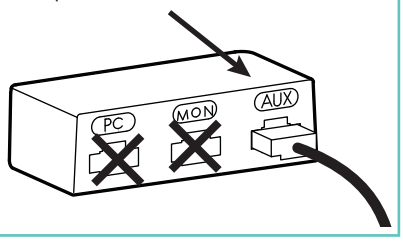

Place power bricks into lower sections of compartment

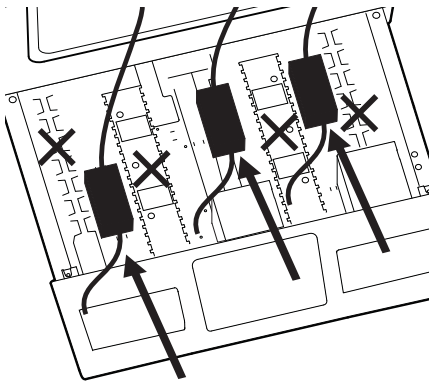

Set-up

11

Attach OPTIONAL customer supplied RFID card reader



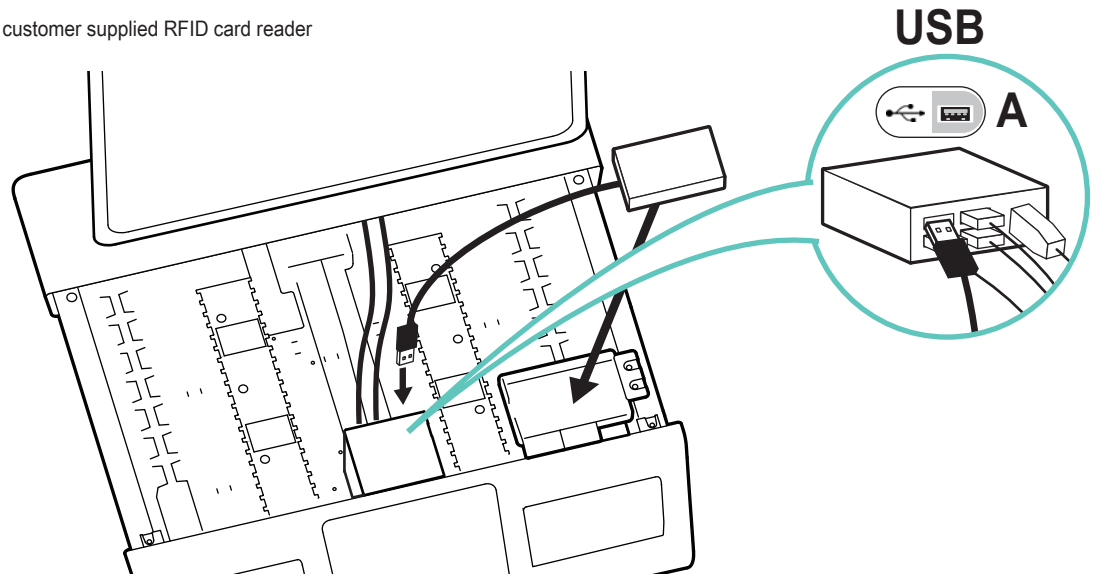

12

Plug in monitor power cable.

1

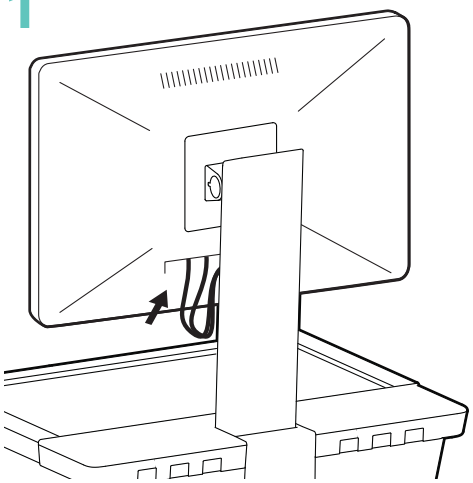

2

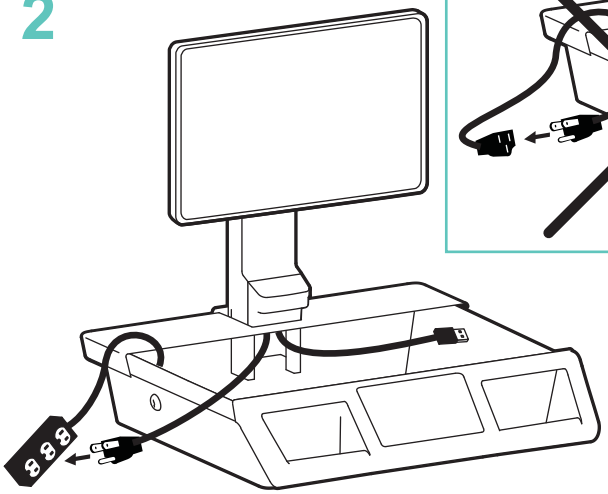

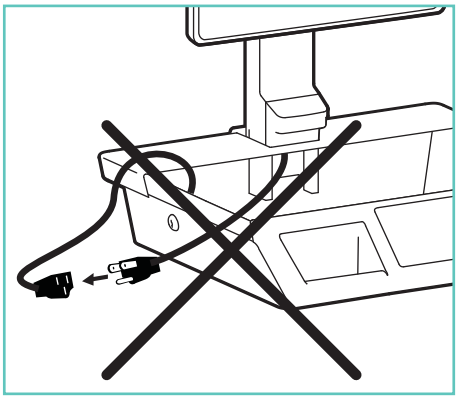

13



4x



1

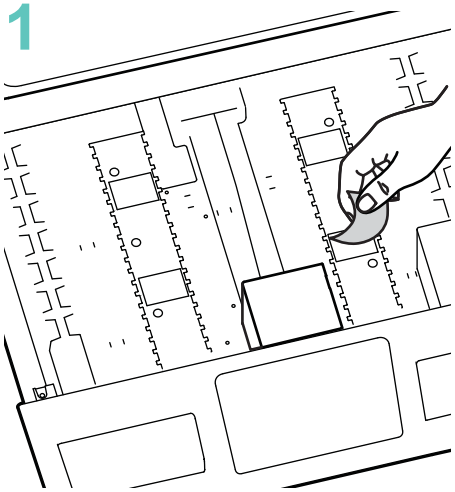

2



Let dry for 60 seconds.

3



4

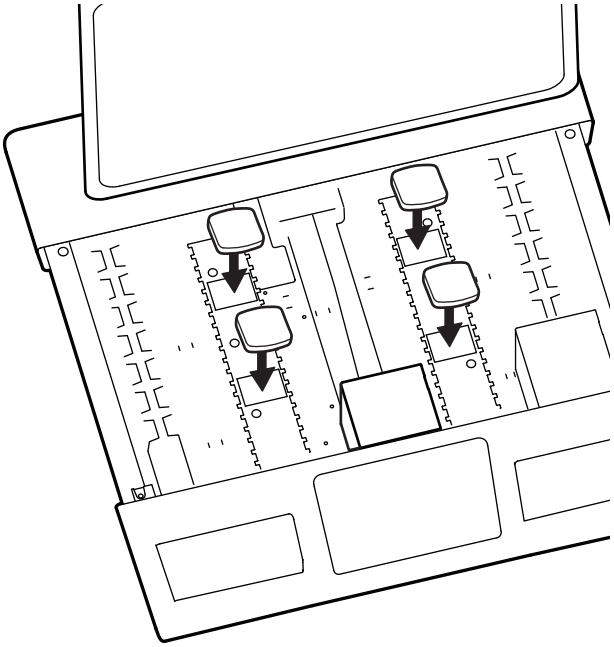

888-25-019-G-00 rev. D • 08/26

14

Plug in computer power cable

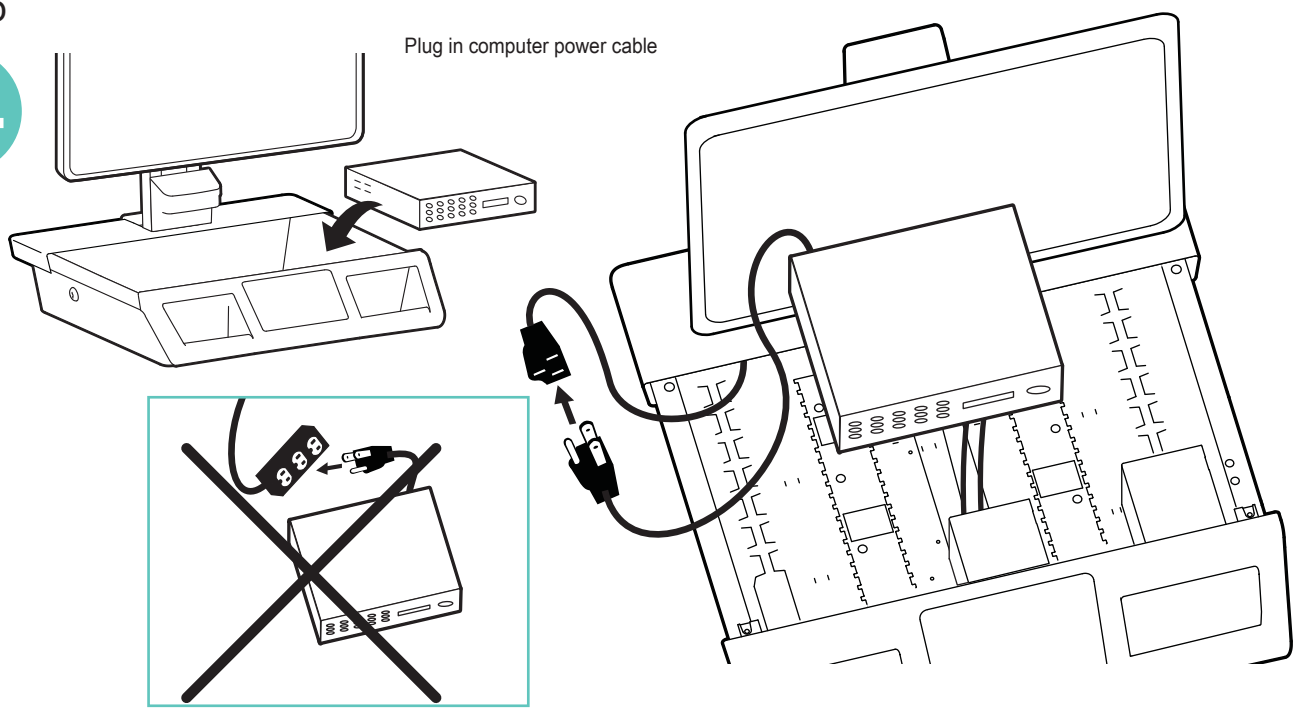

DC Monitor and computer power cables

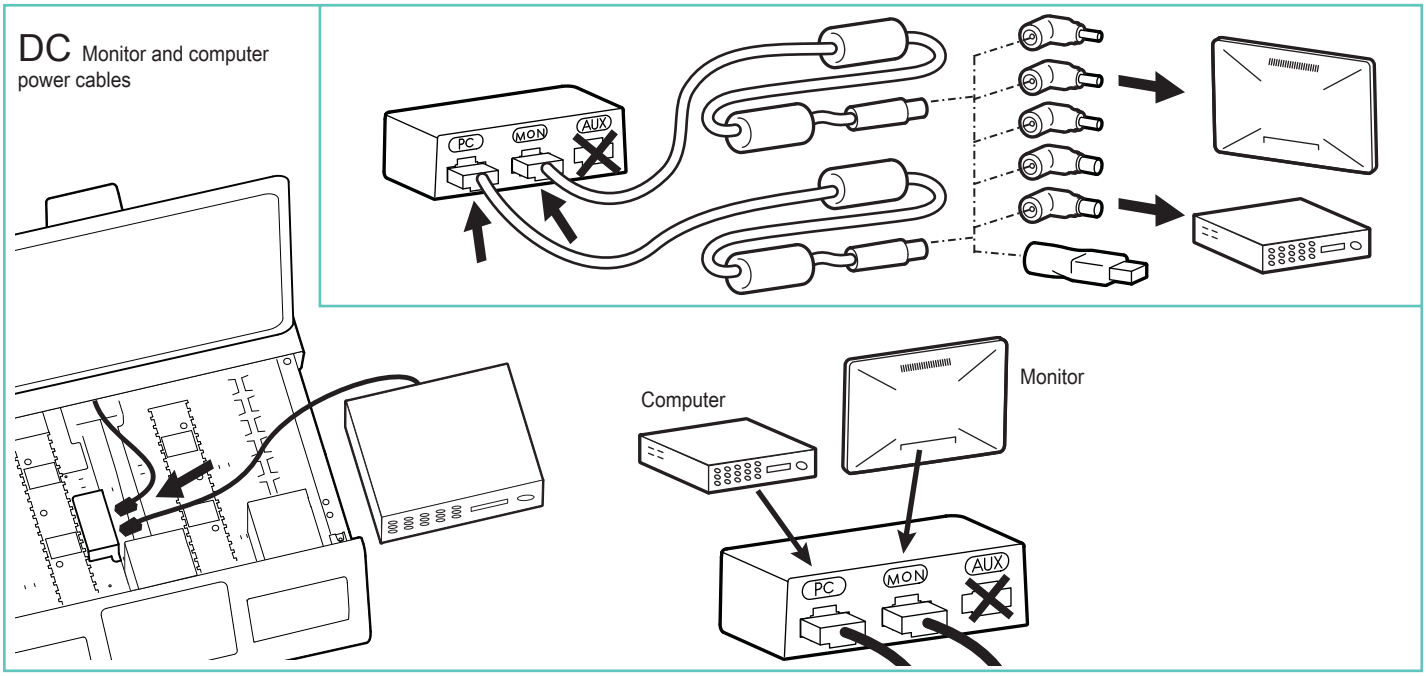

15

Route monitor, computer, and accessory USB cables.
NOTE: USB hub is not powered and will not supply power to powered accessories.

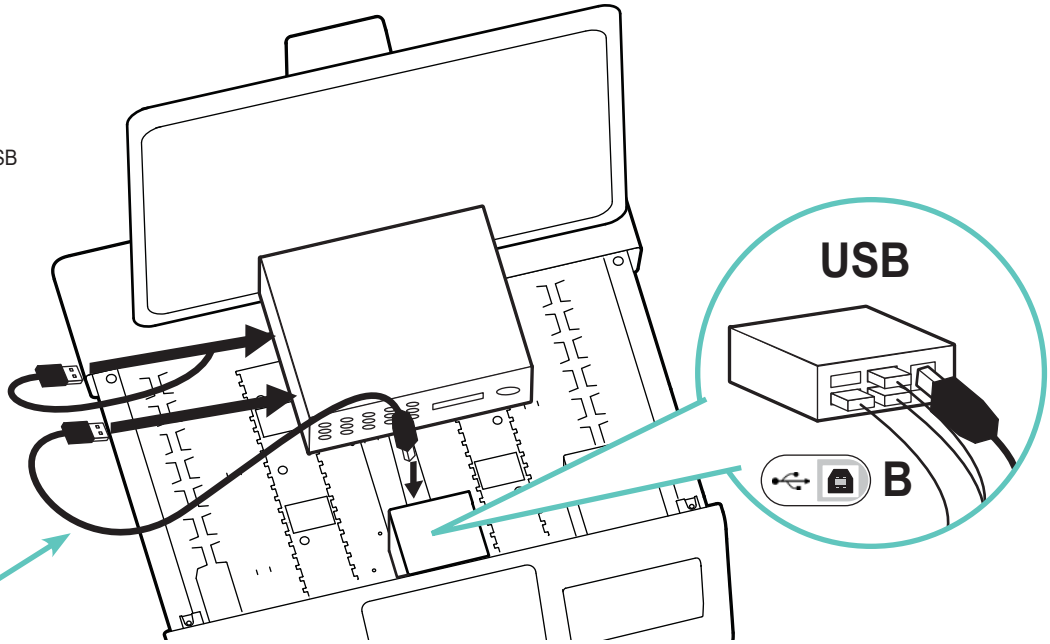

16



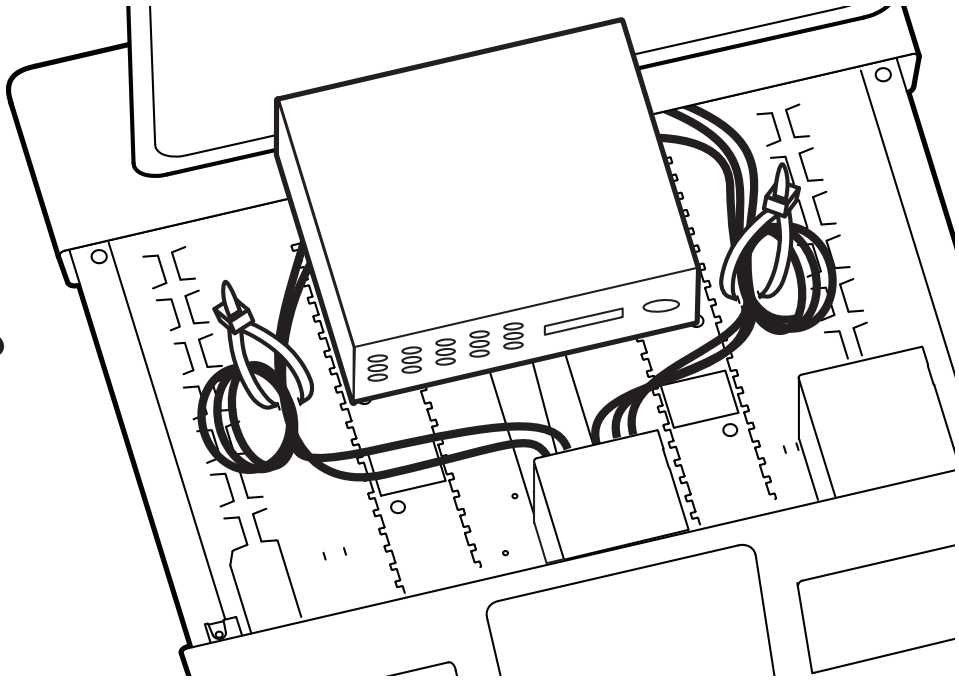

17

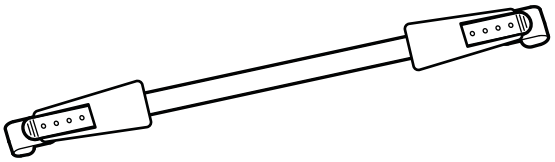

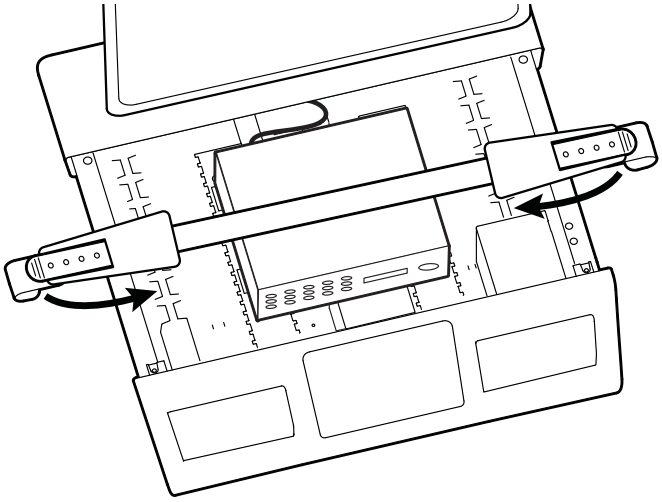

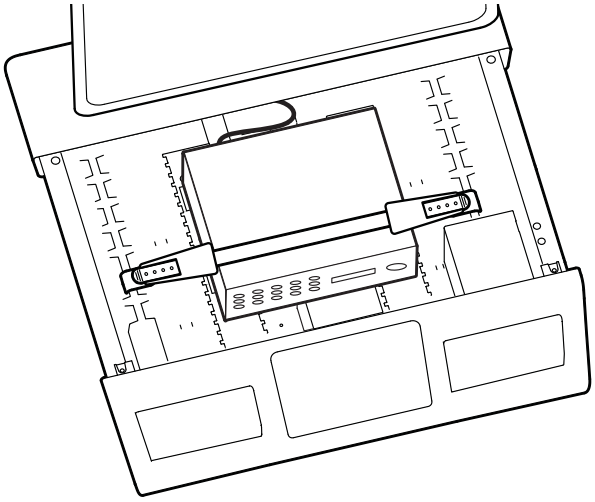

18

1

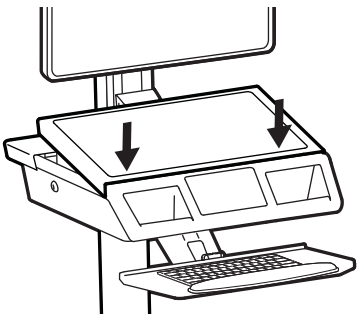

2

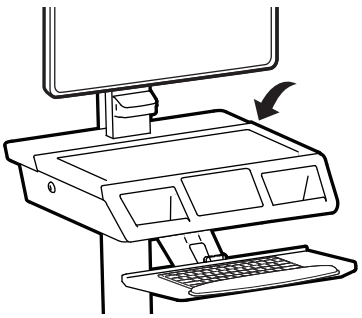

3

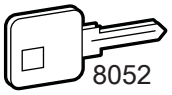

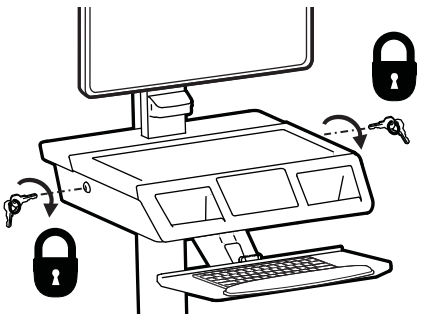

Adjustment

19

Important! You will need to adjust this product after installation is complete. Make sure all your equipment is properly installed on the product before attempting adjustments. This product should move smoothly and easily through the full range of motion and stay where you set it. If movements are too easy or difficult or if product does not stay in desired positions, follow the adjustment instructions to create smooth and easy movements. Depending on your product and the adjustment, it may take many turns to notice a difference. Any time equipment is added or removed from this product, resulting in a change in the weight of the mounted load, you should repeat these adjustment steps to ensure safe and optimum operation.

1

Release Brake to move riser.

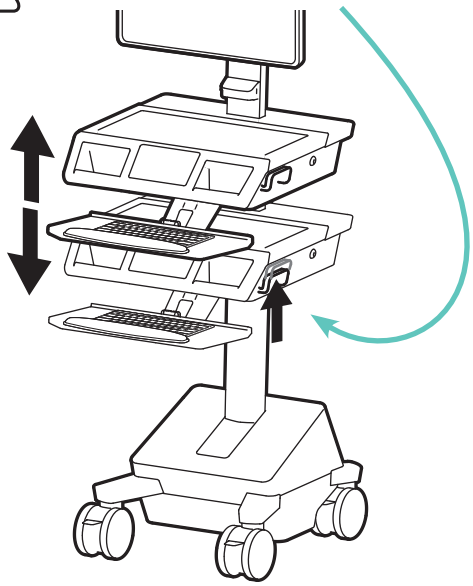

Lift – Up and down

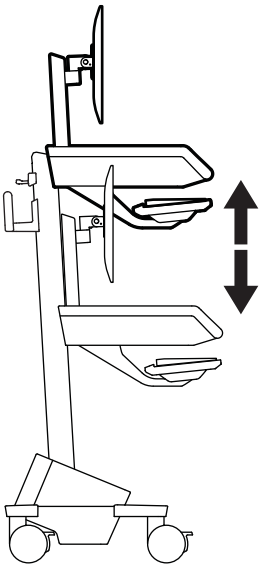

2

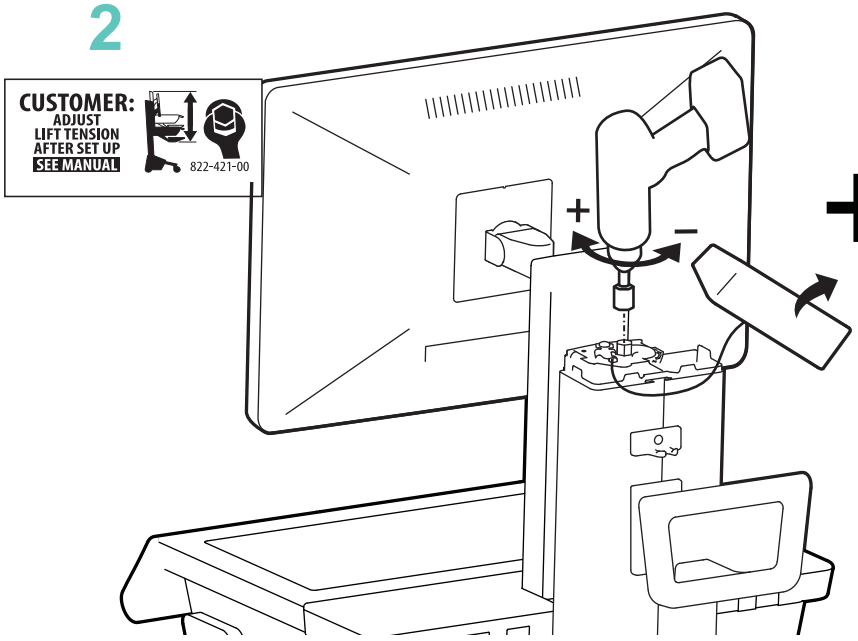

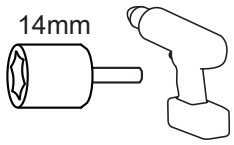



Increase Lift Strength

If the mounted weight is too heavy or this product does not stay up when raised, then you'll need to increase Lift Strength



Decrease Lift Strength

If the mounted weight is too light or this product does not stay down when lowered, then you'll need to decrease Lift Strength

Set-up

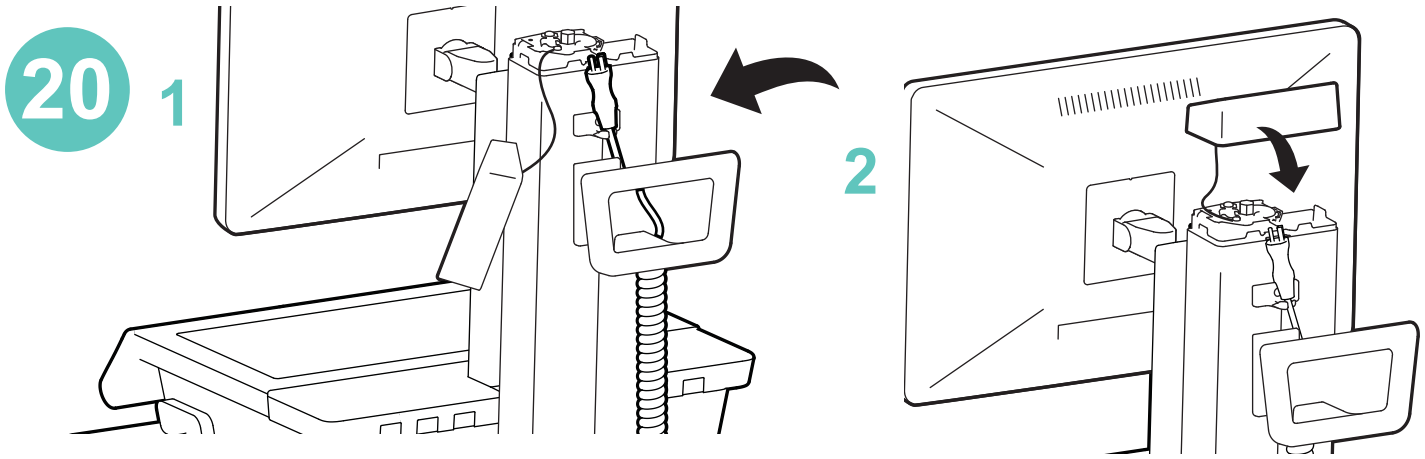

Drawers

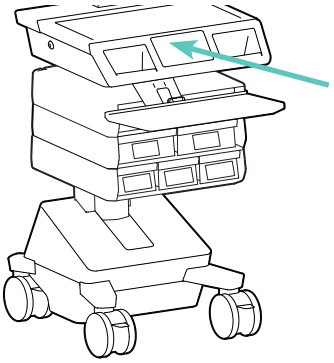

Refer to Software User Guide for Drawer operations

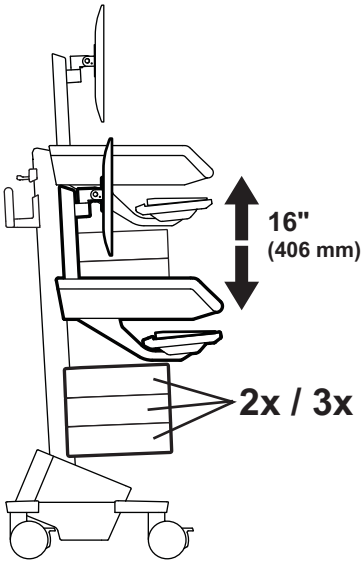

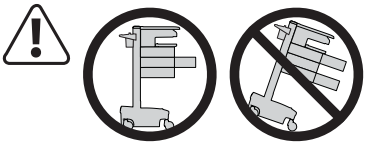

CAUTION: Open only one drawer at a time. Do Not push cart when drawers are open. Failure to follow these instructions may cause the cart to be unstable.

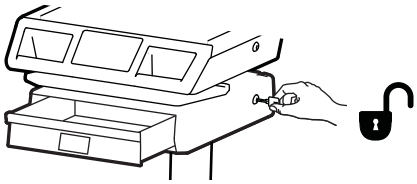

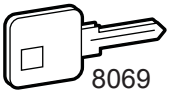

8069

Use key to manually unlock drawer

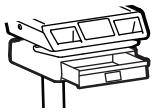

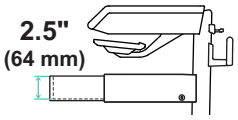

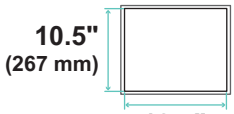

LB kg **Total weight capacity per drawer.**
≤ 2 lbs (1 kg)

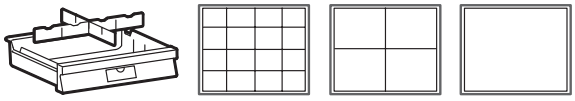

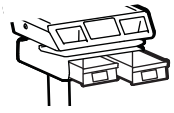

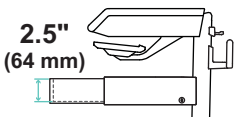

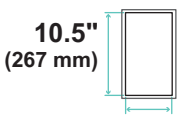

LB kg **Total weight capacity per drawer.**
≤ 1 lbs (0.5 kg)

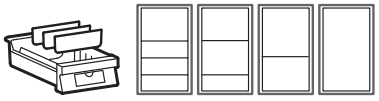

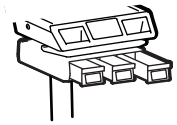

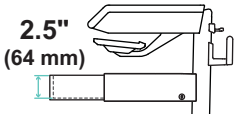

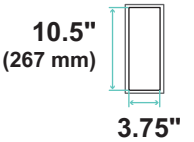

LB kg **Total weight capacity per drawer.**
≤0.25 lbs (0.1 kg)

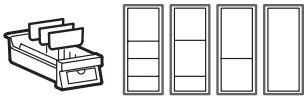

888-25-019-G-00 rev. D • 08/26

How to Change Power System Battery

WARNING: RISK OF ELECTRICAL DISCHARGE

- **Do NOT swap battery cables, doing so will cause arcing or damage.**
- **Do not remove or replace the batteries while cart is located in an oxygen rich or hazardous environment, arcing may occur and cause combustion.**
- Replace batteries with same Amp/Hour rating batteries only.
- Only Ergotron-specified batteries may be used in the Power System. Please call customer care for more details.
- Recycle battery or contact Ergotron for proper battery disposal guidelines.

⚠ WARNING/AVERTISSEMENT

BATTERY REPLACEMENT

Only the following lithium batteries are compatible with this system:

Power Sonic: LI0120460M6CP Inventus 07-56179-502

Installing batteries other than the battery listed above will void the product warranty and result in power system malfunction. Failure to heed this warning may result in severe damage to batteries, power module and possible fire hazard.

REMPLACEMENT DE LA BATTERIE

Seule la batterie suivante est compatible avec ce système :

Power Sonic: LI0120460M6CP Inventus 07-56179-502

L'installation de toute batterie autre que la batterie indiquée ci-dessus rendra nulle la garantie du produit et entraînera le dysfonctionnement du système d'alimentation. Si vous ne vous conformez pas à cette précaution d'utilisation, les batteries et le module d'alimentation risquent d'être sérieusement endommagés, ce qui pourrait provoquer un incendie.

830-345

1

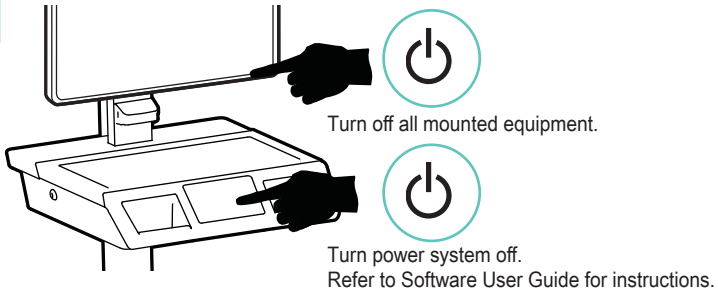

Turn off all mounted equipment.

Turn power system off.
Refer to Software User Guide for instructions.

2

Disconnect Power System from power source.

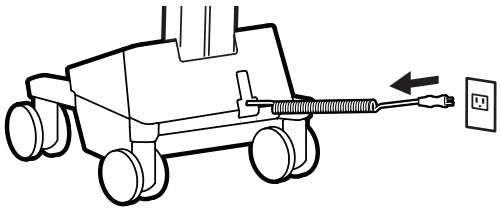

3

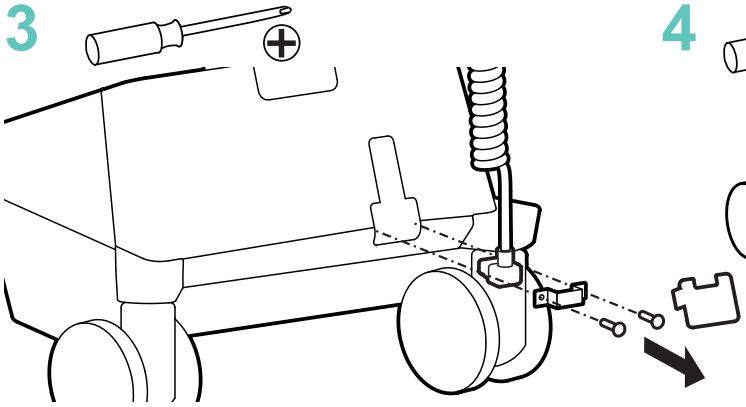

4

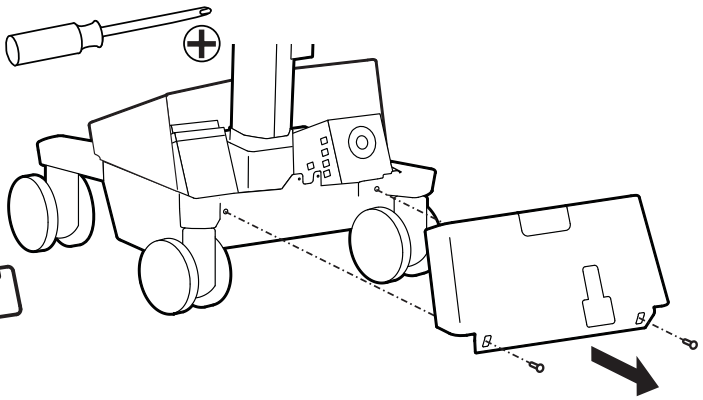

5

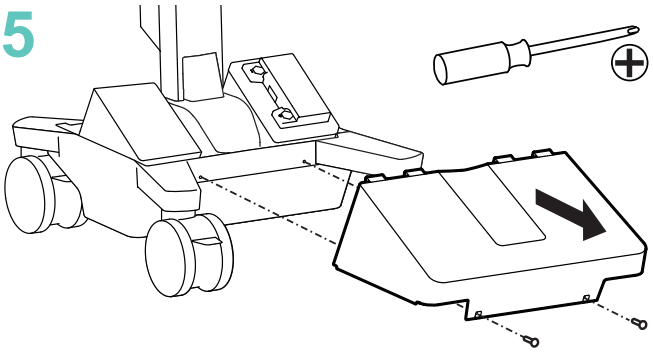

6

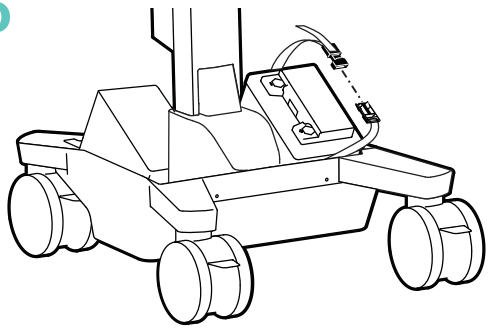

7 Disconnect cables

Battery Harness

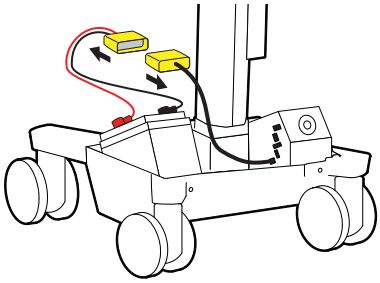

Battery cable

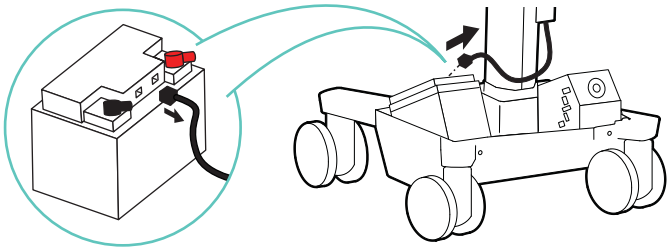

How to Change Power System Battery

⚠ Caution: Do NOT swap battery cables, doing so will cause sparking and trip the circuit breaker.

8

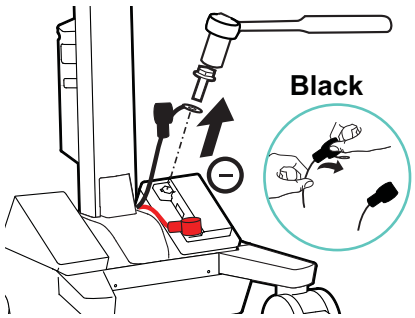

⚠ Caution: Remove Black (-) before removing Red (+).

9

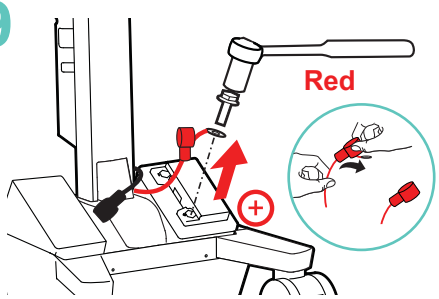

10 Recycle the battery according to local regulations.

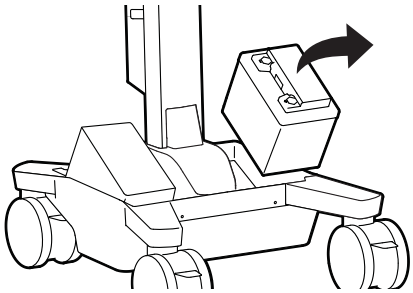

11

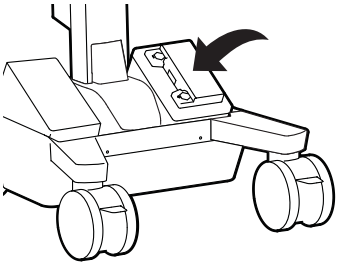

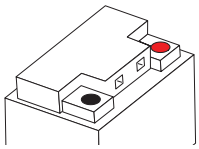

Torque Terminal Bolts to 25-30 in-lbs

12

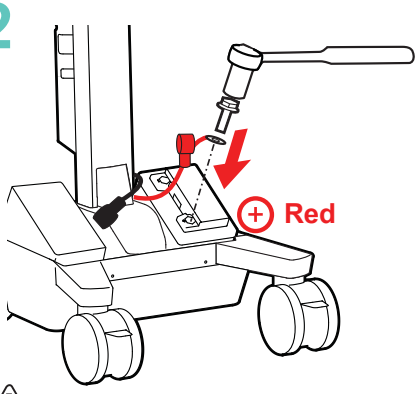

⚠ Caution: Connect Red (+) before connecting Black (-).

13

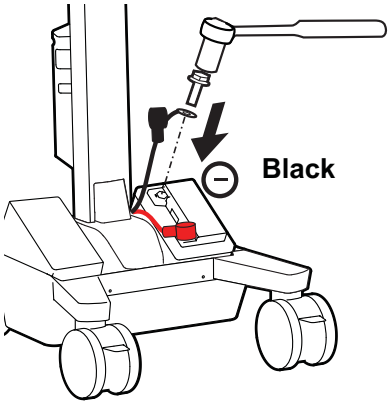

14 PLUG BATTERY HARNESS IN FIRST!

Battery Harness

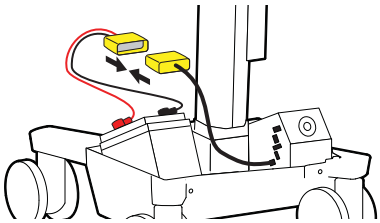

Battery cable

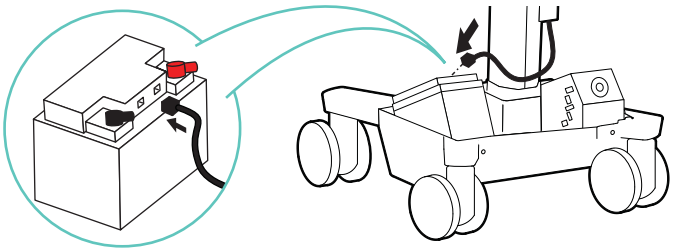

15

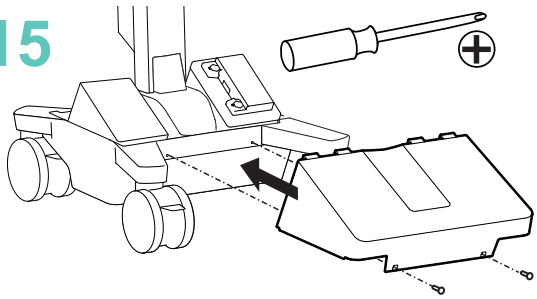

16

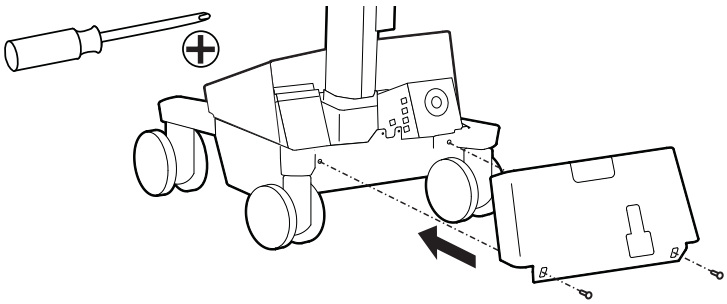

17

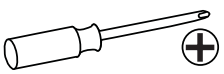

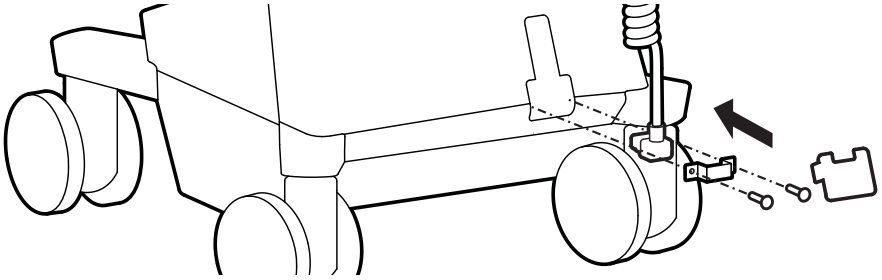

18 Turn cart power back on. Refer to Software User Guide for instructions.

Cart Storage Instructions

Storage - The battery needs to be fully charged before storing and the battery must be recharged a minimum of every 90 days.
The recommended cart storage temperature is 25°C (77°F). At this temperature, the battery's age-related capacity loss is minimized. The minimum storage temperature is -20°C (-4°F) and the maximum storage temperature is 50°C (122°F). The recommended humidity range for storage is 5-95% RH.

1. Turn off all mounted equipment.

2. Plug power cord into appropriate wall outlet to fully charge battery to 100%. Power system must be fully charged before storing!

3. Once battery has been charged to 100%, unplug cart and turn power system off. Refer to touchscreen manual.

4. Recharge battery a minimum of every 90 days.

NOTICE:
Warranty on fully charged batteries left in an unused state for more than three (3) consecutive months is automatically void.
Warranty on fully discharged batteries left in an unused state for more than three (3) consecutive days is automatically void.
If the battery is stored too long without recharging, the electronics in the battery may cause the battery voltage to drop to an unusable level. If this happens, the power system will enter a low charge recovery mode when plugged into power source. Once the process has finished the power system will resume charging as normal. If the low charge recovery process takes longer than 45 minutes please contact Ergotron Customer Care.

EMC

Ergotron Electromagnetic Guidance and Manufacturer's Declaration

Guidance and Manufacturer's Declaration – Electromagnetic Emissions		
The Powered Computer Cart is intended for use in the electromagnetic environment specified below. The customer or the user of the Powered Computer Cart should assure that it is used in such an environment.		
Emissions Test	Complies	Electromagnetic environment – guidance.
RF Emissions CISPR 11	Class A, Group 1	The Powered Computer Cart uses RF energy only for its internal function. Therefore, its RF emissions are very low and unlikely to cause any interference in nearby electronic equipment.
RF Emissions CISPR 11	Class A, Group 1	The Powered Computer Cart is suitable for use in all establishments other than domestic and those directly connected to the public low-voltage power supply network that supplies buildings used for domestic purposes.
Harmonic Emissions IEC 61000-3-2	Class A, Group 1	
Voltage fluctuations/ flicker emissions IEC 61000-3-3	Class A, Group 1	

EMC

Guidance and Manufacturer's Declaration – Electromagnetic Immunity			
The Powered Computer Cart is intended for use in the electromagnetic environment specified below. The customer or the user of the Powered Computer Cart should assure that it is used in such an environment.			
Immunity Test	IEC 60601-1-2 Edition 4.1	Compliance Level	Electromagnetic environment - guidance.
Electrostatic Discharge (ESD) IEC 61000-4-2	±8 kV contact ±2 kV, ±4 kV, ±8 kV, ±15 kV air	Complies	Floors should be wood, concrete, or ceramic tile. If floors are covered with synthetic material, the relative humidity should be at least 30%.
Electrical Fast Transient/ Burst IEC 61000-4-4	±2 kV for power supply lines ±1 kV for input/output lines	Complies	Mains power quality should be that of a typical commercial or hospital environment.
Surge IEC 61000-4-5	±1 kV differential mode ±2 kV common mode	Complies	Mains power quality should be that of a typical commercial or hospital environment.
Voltage Dips, short interruptions, and voltage variations on power supply input lines IEC 61000-4-11	<5% U_T (>95% dip in U_T) for 0.5 cycle 40% U_T (60% dip in U_T) for 5 cycles 70% U_T (30% dip in U_T) for 25 cycles <5% U_T (>95% dip in U_T) for 5 seconds	Complies	Mains power quality should be that of a typical commercial or hospital environment.
Power Frequency (50/60 Hz) Magnetic Field IEC 61000-4-8	30 A/m	Complies	Power frequency magnetic fields should be at levels characteristic of a typical location in a typical commercial or hospital environment.
Radiated, RF, EM Fields IEC 61000-4-3	3 V/m f) 80 MHz – 2.7 GHz 80 % AM at 1 kHz	Complies	Mains power quality should be that of a typical commercial or hospital environment.
Conducted Disturbances, Induced by RF Fields IEC 61000-4-6	3 V 0,15 MHz – 80 MHz 6 V in ISM bands between 0.15 MHz and 80 MHz 80 % AM at 1 kHz	Complies	Mains power quality should be that of a typical commercial or hospital environment.
Radiated Fields in Close Proximity IEC 61000-4-39	30 kHz; CW; 8 A/m 134,2 kHz; 2.1 kHz; 65 A/m	Complies	Mains power quality should be that of a typical commercial or hospital environment.
Note: U_T is the AC mains voltage prior to application of the test level.			

NOTE The EMISSIONS characteristics of this equipment make it suitable for use in industrial areas and hospitals (CISPR 11 class A). If it is used in a residential environment (for which CISPR 11 class B is normally required) this equipment might not offer adequate protection to radio-frequency communication services. The user might need to take mitigation measures, such as relocating or re-orienting the equipment.

Earth Bond Test: To ensure safety grounding between the power cord ground connection and any accessible metal parts on the cart, although not mandatory, the following test is recommended to be performed every two years using a calibrated medical device safety analyzer. The procedure is as follows:

1. Disconnect the cart from mains power (unplug cart from the wall).
2. Remove power from internal power system outlets by pressing the power button on the cart's screen.
3. Set up Earth Bond Test per the medical device safety analyzer instructions.
4. Connect the Cart power cord to the medical device safety analyzer.
5. Remove cover to access Lift Tension Adjustment point.
6. Attach second medical safety device analyzer probe to Lift Tension Adjustment point on Cart.
7. Perform Test (25 amps).
8. Ensure Earth Bond is less than or equal to 0.2 Ohms.
9. Remove medical device safety analyzer connections to Cart, replace cover over Lift Tension Adjustment point, return the Cart to service.

Safety

Recommended Periodic Inspection and Maintenance			
Component	Action	How often	By whom
Ethernet, USB cables	Inspect for wear, pinching, bad connectors	Monthly	Any user
Casters	Inspect for wear and debris	Monthly	Any user
Maximum Load	Inspect to ensure that maximum recommended loads are not exceeded	Daily	Any user
Power System batteries	Replace lithium battery[1,2]	When battery runtime is 60% of original runtime	IT Personnel
Power Module	Inspect for dust at intake, vacuum as required using a vacuum cleaner that DOES NOT generate ESD (Electrostatic Discharge)	Monthly	IT Personnel
Battery harness	Inspect for wear, cracking, pinching, or other damage	Monthly	IT Personnel
Coiled Cord	Inspect for wear including cracking, stretching, or other damage	Weekly	Any user
1. Please dispose of all batteries in accordance with local law. 2. Always replace battery with approved battery.			



Cleaning and Maintenance
The following procedures are not guaranteed to control infection. The hospital infection control administrator or epidemiologist should be consulted regarding cleaning procedures and processes.
To avoid risk of electric shock, do not expose electrical components to water, cleaning solutions or other potentially corrosive liquids or substances.
Before cleaning, disconnect the Cart from its power source.
Do not immerse Cart or Cart components in liquid or allow liquids to flow into the Cart. Wipe all cleaners off surface immediately using a damp cloth. Thoroughly dry surface after cleaning.
Do not use flammable cleaners on Cart surfaces due to close proximity of electrical power and equipment.
You can use most hospital-grade, diluted, non-abrasive, non-corrosive cleaning solutions on all plastic and metal surfaces, whether painted, polished or unfinished.
• Pen and permanent and dry erase markers can be removed with 91% isopropyl alcohol and a soft cloth.
• Iodine stains can be removed with commonly used cleaners and a soft cloth.
• Never use steel wool or other abrasive materials that will damage the surface finish.
• Do not use strong solvents such as trichloroethylene and acetone. These solvents will damage the surface finish.
It is recommended that any cleaning solution be tested on a small, inconspicuous area to ensure surface is not harmed.
Adjustment, Service, Replacement - DO NOT attempt to adjust, service or replace any part of the Cart unless directed to do so through Ergotron-approved documentation (i.e. installation instructions). Only Ergotron, Inc. or an Ergotron-certified entity may adjust, service or replace Cart components. If any component on the Cart is missing or damaged, the Cart must not be used, contact Ergotron Customer Care immediately to request a replacement part.
Cables - Keep cables neatly organized on the Cart (a variety of solutions are provided with your cart for this purpose). Excess cables should be routed away from moving components with cable clips. Review Cable Routing section of this guide, or contact Ergotron Customer Care for more information.
Casters - Check casters periodically to make sure they are clean and free of debris that would prevent smooth travel. Avoid moving Cart across uneven, dirty or damaged surfaces.
Customer Equipment- Make sure equipment is balanced and mounted securely to Cart. Do not reposition Cart components on riser or tower unless instructed to do so in the installation instructions. Moving Cart components too high or too low on the Riser may create an unstable condition, leading to equipment damage or even personal injury. Contact Ergotron Customer Care for information about moving Cart components.



Equipment & Accessories Disposal

1. Please dispose of all batteries in accordance with local law.
2. All Electronics should be recycled through an electronics recycler.
3. Remaining plastics and metals can be recycled through a commercial recycler.

Specifications

CLASSIFICATIONS
Charger: Class 1
Main Controller: Class 1, Internally Powered
Degree of Protection against Harmful Ingress of Water, IPX0
EQUIPMENT not suitable for use in the presence of a FLAMMABLE ANAESTHETIC MIXTURE WITH AIR or WITH OXYGEN OR NITROUS OXIDE

POWER SPECIFICATIONS

Cart Power

	AC - 120 / 60	AC - 230 / 50	AC - 220 / 60	DC
Input Voltage:	120 VAC	230 VAC	220 VAC	120 / 240 VAC
Input Current:	5.0 A max	5.0 A max	5.0 A max	5.0 A max
Input Frequency:	60 Hz	50 Hz	60 Hz	50 / 60 Hz
Output Voltage:	120 VAC, 60 Hz	230 VAC, 50 Hz	220 VAC, 60 Hz	
Channel 1:				5 – 24 VDC
Channel 2:				5 – 24 VDC
Channel 3:				5 – 24 VDC
Output Current:	150 W, 150 VA	150 W, 150 VA	150 W, 150 VA	5 A max, each DC channel

Battery Specifications

Lithium U1	
Chemistry:	Lithium Iron Phosphate
Capacity:	46 Ah - 46.8 Ah
Voltage:	12.9V (nominal), 14.4V – 14.6V (max)
Energy:	591 Wh – 599 Wh
Charge Time:	< 2.5 hrs.
Measurements (max):	U1; 209.7 mm (8.3”) L x 137.2 mm (5.4”) W x 18.5 mm (7.3”) H
Weight (max):	6.46 kg (14.24 lbs.)

Specifications

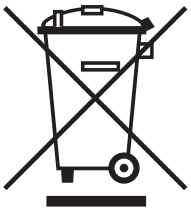




RADIO COMPLIANCE STATEMENTS
This Class A digital apparatus complies with Canadian ICES-003.
Cet appareil numerique de la classe A est conforme a la norme NMB-003 du Canada.

FCC
This device complies with Part 15 of FCC Rules. Operation is subject to the following two conditions:
(1) This device may not cause harmful interference, and
(2) This device must accept any interference received including interference that causes undesired operation.
Caution: Any changes or modifications to this equipment not expressly approved by Ergotron could void the user's authority to operate the equipment.
This equipment has been tested and found to comply within the limits for a Class A digital device, pursuant to part 15 of the FCC Rules. These limits are designed to provide reasonable protection against harmful interference in a residential installation. This equipment generates, uses, and can radiate radio frequency energy and, if not installed and used in accordance with the instructions, may cause harmful interference to radio communications. However, there is no guarantee that interference will not occur in a particular installation. If this equipment does cause harmful interference to radio or television reception, which can be determined by turning the equipment off and on, the user is encouraged to try to correct the interference by one or more of the following measures: (1) Re-orient or relocate the receiving antenna (2) Increase the separation between the equipment and receiver (3) Connect the equipment into an outlet on a different circuit from that to which the receiver is connected (4) Consult the dealer or an experienced radio/TV technician for help.
This device and its antenna(s) must not be co-located or operated in conjunction with any other antenna or transmitter except in accordance with FCC's multi-transmitter procedures.

IMPORTANT NOTE:
FCC Radiation Exposure Statement:
Co-location of this module with other transmitter that operate simultaneously are required to be evaluated using the FCC multi-transmitter procedures. This device complies with FCC RF radiation exposure limits set forth for an uncontrolled environment at 8.5 mm.

ISED / Declaration de conformite d'ISDE
This device complies with Industry Canada license-exempt RSS Standard(s). Operation is subject to the following two conditions: (1) This device may not cause interference, and (2) this device must accept any interference, including interference that may cause undesired operation of the device.
Le present appareil est conforme aux CNR d'Industrie Canada applicables aux appareils radio exempts de licence. L'exploitation est autorisee aux deux conditions suivantes: (1) l'appareil ne doit pas produire de brouillage, et (2) l'utilisateur de l'appareil doit accepter tout brouillage radioelectrique subi, meme si le brouillage est susceptible d'en compromettre le fonctionnement.
The device and its antenna(s) must not be co-located with any other transmitters except in accordance with IC multi-transmitter product procedures.
Cet appareil et son antenne(s) ne doit pas etre co-localises ou fonctionnement en association avec une autre antenne ou transmetteur.

IMPORTANT NOTE:
IC Radiation Exposure Statement:
This equipment complies with radiation exposure limits set forth for uncontrolled environment for a separation distance of 8.5 mm from the radiating antenna element.
The antenna used for this transmitter was installed to provide the appropriate separation distance from all persons.
Cet équipement est conforme aux limites d'exposition aux rayonnements établies pour un environnement non contrôlé, pour une distance de séparation de 8.5 mm par rapport à l'élément rayonnant de l'antenne. L'antenne utilisée pour cet émetteur a été installée de manière à assurer une distance de séparation appropriée par rapport à toute personne.

CHANGES IN USAGE CONDITIONS
As noted above, this device and its antenna(s) must not be co-located with any other transmitters except in accordance with IC multi-transmitter product procedures.
If the device is co-located with multiple antennas, the module could be subject to a FCC Class 2 Permissive Change and a ISED Canada Class 4 Permissive Change policy in accordance with FCC KDB 996396 D01 and ISED Canada RSP-100.
In accordance with FCC KDB 996369 D03, section 2.9, test mode configuration information is available from the Module manufacturer for the Host (OEM) product manufacturer. This test mode configuration information is included in Appendix A at the end of this User Manual
Changes or modifications not expressly approved by Ergotron, Inc. could void the user's authority to operate the equipment.
Please contact Ergotron for complete EMC compatibility information.
FCC ID: 2AVU2-917542CM
IC: 25915-917542CM
HVIN: MC20-CMACLCD – Mosaic Cart with LCD Monitor Riser and 120V~, 60Hz, 150W AC output power for customer peripherals.
HVIN: MC20-CMDCLCD – Mosaic Cart with LCD Monitor Riser and Three channels of 5-24VDC, 5A output power for customer peripherals
Contains FCC ID: 2AQ9D-ENV2SOM, IC: 24335-ENV2SOM
Contains FCC ID: V7TW311MI6, IC: 32636-AX5

For the latest User Installation Guide please visit: www.ergotron.com
For Warranty visit: www.ergotron.com/warranty
For Service visit: www.ergotron.com
For local customer care phone numbers visit: http://contact.ergotron.com

NOTE: When contacting customer service, reference the serial number.

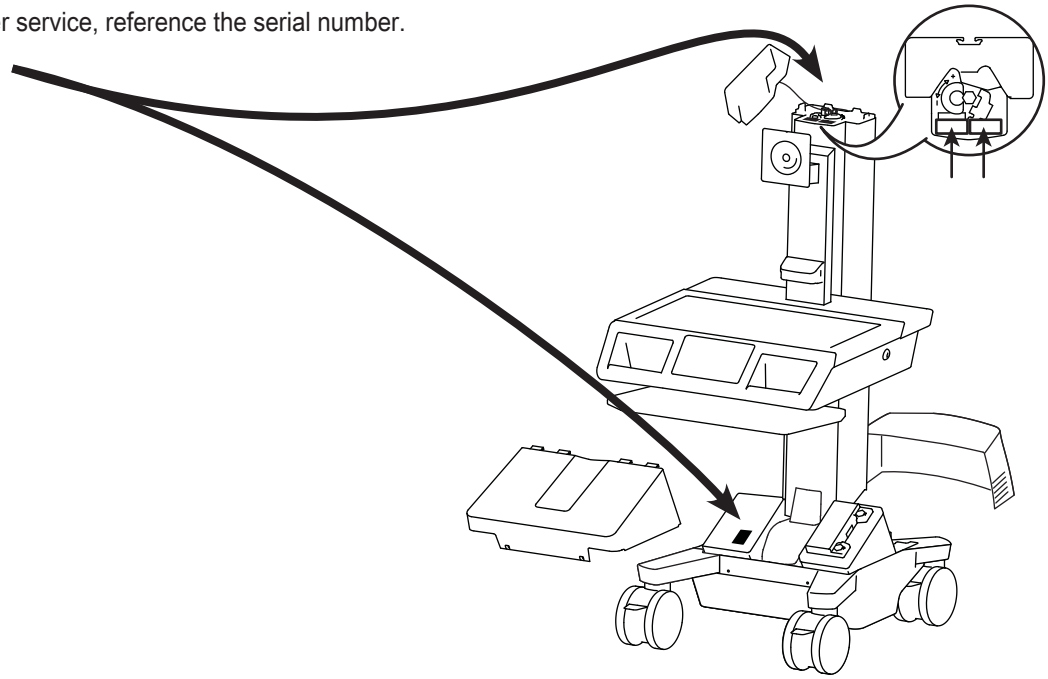

ergotron®

www.ergotron.com | USA: 1-800-888-8458 | Europe: +31 (0)33-45 45 600 | China: 400-120-3051 | Japan: japansupport@ergotron.com

© 2025 Ergotron, Inc. All rights reserved. Mosaic™ is a trademark of Ergotron, Inc.

While Ergotron, Inc. makes every effort to provide accurate and complete information on the installation and use of its products, it will not be held liable for any editorial errors or omissions (including those made in the process of translation from English to another language), or for incidental, special or consequential damages of any nature resulting from furnishing this instruction and performance of equipment in connection with this instruction. Ergotron, Inc. reserves the right to make changes in the product design and/or product documentation without notification to its users. For the most current product information, or to know if this document is available in languages other than those herein, please contact Ergotron. No part of this publication may be reproduced, stored in a retrieval system, or transmitted in any form or by any means, electronic, mechanical, photocopying, recording or otherwise without the prior written consent of Ergotron, Inc.,1181 Trapp Road, Eagan, Minnesota, 55121, USA Patents Pending and Patented U.S. & Foreign. Ergotron is a registered trademark of Ergotron, Inc.

888-25-019-G-00 rev. D • 08/26