Maintenance and Service Guide

HP EliteDesk 8 Mini G2i Desktop Next Gen AI PC

SUMMARY

This guide provides maintenance information about such topics as spare parts, removal and replacement of parts, security, and backing up.

Legal information

© Copyright 2026 HP Development Company, L.P.

Intel and Thunderbolt are trademarks of Intel Corporation or its subsidiaries in the U.S. and/or other countries. Microsoft and Windows are either registered trademarks or trademarks of Microsoft Corporation in the United States and/or other countries. USB4, USB Type-C, USB-C, and the USB 10 Gbps and USB 40 Gbps port logos are registered trademarks of USB Implementers Forum. DisplayPort and the DisplayPort logo are trademarks owned by the Video Electronics Standards Association (VESA) in the United States and other countries. Wi-Fi is a registered trademark of Wi-Fi Alliance.

The information contained herein is subject to change without notice. The only warranties for HP products and services are set forth in the express warranty statements accompanying such products and services. Nothing herein should be construed as constituting an additional warranty. HP shall not be liable for technical or editorial errors or omissions contained herein.

First Edition: April 2026

Document Part Number: P98046-001

Product notice

This guide describes features that are common to most models. Some features may not be available on your computer.

Not all features are available in all editions or versions of Windows. Systems may require upgraded and/or separately purchased hardware, drivers, software or BIOS update to take full advantage of Windows functionality. Windows is automatically updated, which is always enabled. High-speed internet and Microsoft account required. ISP fees may apply and additional requirements may apply over time for updates. See http://www.windows.com. **If your product ships with Windows in S Mode:** Windows in S Mode works exclusively with apps from the Microsoft Store within Windows. Certain default settings, features, and apps cannot be changed. Some accessories and apps that are compatible with Windows may not work (including some antivirus, PDF writers, driver utilities, and accessibility apps), and performance may vary, even if you switch out of S Mode. If you switch to Windows, you cannot switch back to S Mode. Learn more at Windows.com/SmodeFAQ.

To access the latest user guides, go to http://www.hp.com/support, and follow the instructions to find your product. Then select **Setup & User Guides**.

To help us improve this document, please send any suggestions, comments, or errors to mailto:hp.doc.feedback@hp.com. Include the document part number when submitting your feedback.

Software terms

By installing, copying, downloading, or otherwise using any software product preinstalled on this computer, you agree to be bound by the terms of the HP End User License Agreement (EULA). If you do not accept these license terms, your sole remedy is to return the entire unused product (hardware and software) within 14 days for a full refund subject to the refund policy of your seller.

For any further information or to request a full refund of the price of the computer, please contact your seller.

Important notice about Customer Self-Repair parts

Your computer includes Customer Self-Repair parts and parts that should be accessed only by an authorized service provider.

IMPORTANT: See Removal and replacement procedures for Customer Self-Repair parts on page 28 for details.

Accessing parts described in the **Removal and replacement procedures for authorized service provider parts** section can damage the computer or void your warranty.

Table of contents

1 Computer features 1
- Standard configuration features 1
- Front panel components 1
- Rear panel components 2
- Serial number location 4
- Changing from desktop to tower orientation 4

2 Computer features 6
- Standard configuration features 6
- Front panel components 6
- Rear panel components 7
- Serial number location 9
- Changing from desktop to tower orientation 9

3 Illustrated parts catalog 11
- Computer major components 11
- Miscellaneous parts 14

4 Routine care, drive guidelines, and disassembly preparation 19
- Electrostatic discharge information 19
  - Generating static electricity 19
  - Preventing electrostatic damage to equipment 20
  - Personal grounding methods and equipment 20
  - Grounding the work area 21
  - Recommended materials and equipment 21
- Operating guidelines 22
- Routine care 22
  - General cleaning safety precautions 22
  - Removing dirt and debris from your computer 23
  - Cleaning your computer with a disinfectant 23
  - Cleaning the computer case 24
  - Cleaning the keyboard 24
  - Cleaning the monitor 25
  - Cleaning the mouse 25
- Service considerations 25
  - Tools and software requirements 25
  - Screws 26
  - Cables and connectors 26
  - Hard drives 26
  - Lithium coin cell battery 27

5 Removal and replacement procedures for Customer Self-Repair parts 28
Component replacement procedures 28
Preparation for disassembly 28
Access panel 29
Front bezel and dust filter 29
Ambient sensor 30
Speaker 31
Fan 32
Second fan 33
Solid-state drive 35
WLAN module 36
Memory modules (SODIMMs) 38
Battery 41
Flex I/O connector board 44
6 Removal and replacement procedures for authorized service provider parts 46
Component replacement procedures 46
Heat sink 46
Flex I/O connector board (board-to-board) 48
System board 49
Wireless antennas (select models only) 51
7 Troubleshooting without diagnostics 53
Before you call for technical support 53
Helpful hints 54
Solving general problems 54
Cannot access the Computer Setup (F10) Utility when booting the computer 55
Computer appears locked up and will not turn off when the power button is pressed 55
Computer will not respond to keyboard or mouse 55
Computer date and time display is incorrect 55
There is no sound or sound volume is too low 55
Cannot remove computer cover or access panel 56
Poor performance 56
System does not turn on and the lights on the front of the computer are not blinking 57
Solving power problems 57
Power supply shuts down intermittently 57
Solving audio problems 58
Sound cuts in and out 58
Sound does not come out of the speaker or headphones 58
Computer appears to be locked up while recording audio 58
Line-in jack is not functioning properly 59
Solving printer problems 59
Printer will not print 59
Printer will not turn on 59
Printer prints garbled information 59
Solving keyboard and mouse problems 60
Keyboard commands and typing are not recognized by the computer 60

Mouse does not respond to movement or is too slow....60
Solving hardware installation problems....61
A new device is not recognized as part of the system....61
Computer will not start....61
Solving network problems....62
Network driver does not detect network controller....62
Network status link light never blinks....62
Diagnostics reports a failure....63
Diagnostics passes, but the computer does not communicate with the network....63
Network controller stopped working when an expansion board was added to the computer....63
Network controller stops working without apparent cause....63
Cannot connect to network server when attempting remote system installation....64
System setup utility reports unprogrammed EEPROM....64
Solving memory problems....64
System will not boot or does not function properly after installing additional memory modules....64
Out of memory error....65
Memory count during POST is wrong....65
Insufficient memory error during operation....65
Solving USB flash drive problems....65
USB flash drive is not seen as a drive letter in Windows....65
USB flash drive not found (identified)....65
System will not boot from USB flash drive....66
The computer boots to DOS after making a bootable flash drive....66
Solving internet access problems....66
Unable to connect to the internet....66
Cannot automatically launch internet programs....67
Solving software problems....67
Computer will not start up and the HP logo does not appear....67
"Illegal Operation has Occurred" error message is displayed....67
8 Computer Setup (F10) Utility....68
Using Computer Setup (F10) Utilities....68
Computer Setup Main....69
Computer Setup Security....73
Computer Setup Advanced....79
9 POST error messages....89
POST numeric codes and text messages....89
Interpreting POST diagnostic front panel lights and audible codes....96
10 Password security and resetting CMOS....99
Changing a setup or power-on password....99
Deleting a setup or power-on password....99
11 Backing up, restoring, and recovering....101
Backing up information and creating recovery media....101

Using Windows tools for backing up 101
Using the HP Cloud Recovery Download Tool to create recovery media (select products only) 101
Restoring and recovering your system 102
Creating a system restore 102
Restoring and recovery methods 102
Recovering using HP Recovery media 102
Changing the computer boot order 103
Using HP Sure Recover (select products only) 103
12 Statement of memory volatility 104
Current BIOS steps 104
Nonvolatile memory usage 106
Questions and answers 107
Using HP Sure Start (select products only) 108
13 Using HP PC Hardware Diagnostics 109
Using HP PC Hardware Diagnostics Windows (select products only) 109
Using an HP PC Hardware Diagnostics Windows hardware failure ID code 109
Accessing HP PC Hardware Diagnostics Windows 109
Accessing HP PC Hardware Diagnostics Windows from HP Support Assistant (select products only) 109
Accessing HP PC Hardware Diagnostics Windows from the Start menu (select products only) 110
Downloading HP PC Hardware Diagnostics Windows 110
Downloading the latest HP PC Hardware Diagnostics Windows version from HP 110
Downloading the HP PC Hardware Diagnostics Windows from the Microsoft Store 110
Downloading HP Hardware Diagnostics Windows by product name or number (select products only) 111
Installing HP PC Hardware Diagnostics Windows 111
Using HP PC Hardware Diagnostics UEFI 111
Using an HP PC Hardware Diagnostics UEFI hardware failure ID code 111
Starting HP PC Hardware Diagnostics UEFI 111
Starting HP PC Hardware Diagnostics UEFI through HP Hotkey Support software (select products only) 112
Downloading HP PC Hardware Diagnostics UEFI to a USB flash drive 112
Downloading the latest HP PC Hardware Diagnostics UEFI version 113
Downloading HP PC Hardware Diagnostics UEFI by product name or number (select products only) 113
Using Remote HP PC Hardware Diagnostics UEFI settings (select products only) 113
Downloading Remote HP PC Hardware Diagnostics UEFI 113
Downloading the latest Remote HP PC Hardware Diagnostics UEFI version 113
Downloading Remote HP PC Hardware Diagnostics UEFI by product name or number 114
Customizing Remote HP PC Hardware Diagnostics UEFI settings 114
14 Power cord set requirements 115
General requirements 115
Japanese power cord requirements 115
Country-specific requirements 115

15 Specifications 117
Index 118

1 Computer features

This chapter provides you with an overview of your computer's features.

IMPORTANT: Your keyboard might include a Copilot key. Copilot in Windows (select products only) requires Windows 11. Some features require a neural processing unit (NPU). The timing of feature delivery and availability varies by market and device. You must have a Microsoft account to use the Copilot feature. When the Copilot feature is not available, pressing the Copilot key opens the Bing search engine. See http://aka.ms/WindowsAIFeatures.

Standard configuration features

To identify a typical computer configuration, read this section. Features vary depending on the model. For support assistance and to learn more about the hardware and software installed on your computer model, run the HP Support Assistant utility.

NOTE: You can use this computer model in a tower orientation or a desktop orientation. See Changing from desktop to tower orientation on page 4.

NOTE: Your computer model might look slightly different from the illustration in this section.

Front panel components

Use the illustration and table to identify the front panel components.

NOTE: Drive configuration varies by model. Some models have a bezel blank that covers one or more drive bays.

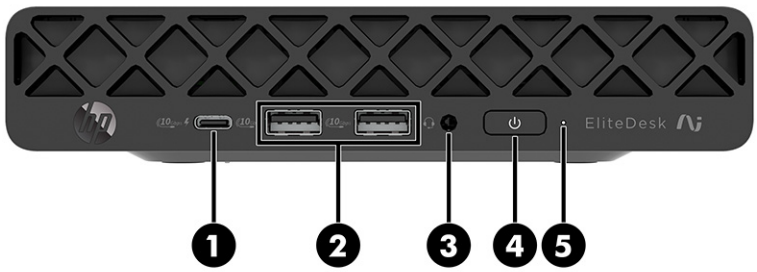

Table 1-1 **Identifying the front panel components**

		Front panel components			
(1)		USB Type-C® 10 Gbps port with HP Sleep and Charge	(4)		Power button*
(2)		USB 10 Gbps ports (2) NOTE: Use a standard USB Type-A charging cable or cable adapter (purchased separately) when charging a small external device such as a smartphone.	(5)		Hard drive activity light
(3)		Audio-out (headphone)/Audio-in (microphone) combo jack**			

*The light on the power button is normally white when the power is on. If the light blinks red, the computer displays a diagnostic code to indicate a problem. See the Interpreting POST diagnostic front panel lights and audible codes on page 96 to interpret the code.

**The combo jack supports headphones, line output devices, microphones, line input devices, or CTIA-style headsets.

Rear panel components

Use the illustration and table to identify the rear panel components.

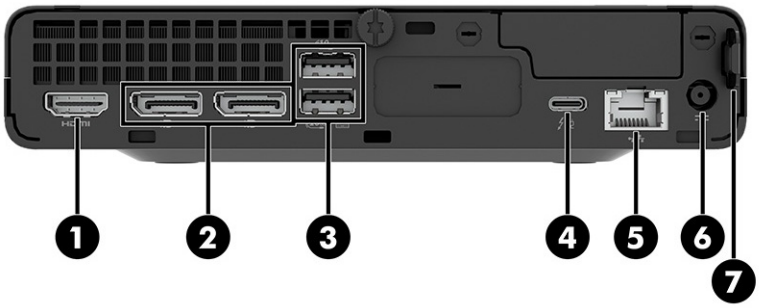

Table 1-2 Identifying the rear panel components

		Rear panel components			
(1)	HDMI	HDMI port	(5)		RJ-45 (network) jack
(2)		DisplayPort monitor connectors (2)	(6)		Power connector
(3)	10Gbps	USB 10 Gbps ports (2) Connect a USB device, provide high-speed data transfer, and (for select products) charge small devices (such as a smartphone) when the computer is on or in sleep mode. NOTE: Use a standard USB Type-A charging cable or cable adapter (purchased separately) when charging a small external device.	(7)		Padlock or security cable loop
(4)		USB Type-C port with HP Sleep and Charge Connects a USB device, provides data transfer, and charges small devices (such as a smartphone), even when the computer is off. NOTE: Use a standard USB Type-C charging cable or cable adapter (purchased separately) when charging a small external device. – and – Connects a display device that has a USB Type-C connector, providing DisplayPort output.			

NOTE: Your model might have additional ports available from HP.

When a graphics card is installed in one of the system board slots, you can use the video connectors on the graphics card or the integrated graphics on the system board. The specific graphics card installed and software configuration determine the behavior.

You can disable the system board graphics by changing settings in BIOS F10 Setup.

Serial number location

Each computer has a unique serial number and a product ID number that are located on the exterior of the computer. Keep these numbers available when contacting customer service for assistance.

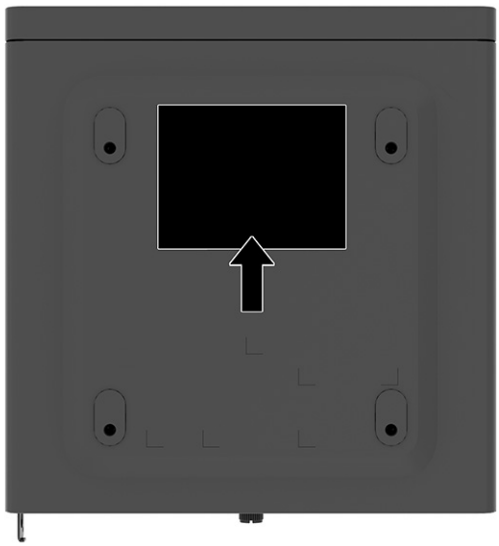

Changing from desktop to tower orientation

You can use the computer in a tower orientation with an optional tower stand that you can purchase from HP.

NOTE: To stabilize the computer in a tower orientation, HP recommends the use of the optional tower stand.

1. Remove or disengage any security devices that prohibit opening the computer.
2. Remove all removable media, such as compact discs and USB flash drives, from the computer.
3. Turn off the computer properly through the operating system, and turn off any external devices.
4. Disconnect the power cord from the AC outlet and disconnect any external devices.

5. Position the computer so that its right side faces up, and place the computer in the optional stand.

6. Reconnect the power cord and any external devices, and then turn on the computer.

NOTE: Be sure that at least 10.2 centimeters (4 inches) of space on all sides of the computer remains clear and free of obstructions.

7. Lock any security devices that were disengaged before the computer was moved.

2 Computer features

This chapter provides you with an overview of your computer's features.

IMPORTANT: Your keyboard might include a Copilot key. Copilot in Windows (select products only) requires Windows 11. Some features require a neural processing unit (NPU). The timing of feature delivery and availability varies by market and device. You must have a Microsoft account to use the Copilot feature. When the Copilot feature is not available, pressing the Copilot key opens the Bing search engine. See http://aka.ms/WindowsAIFeatures.

Standard configuration features

To identify a typical computer configuration, read this section. Features vary depending on the model. For support assistance and to learn more about the hardware and software installed on your computer model, run the HP Support Assistant utility.

NOTE: You can use this computer model in a tower orientation or a desktop orientation. See Changing from desktop to tower orientation on page 4.

NOTE: Your computer model might look slightly different from the illustration in this section.

Front panel components

Use the illustration and table to identify the front panel components.

NOTE: Drive configuration varies by model. Some models have a bezel blank that covers one or more drive bays.

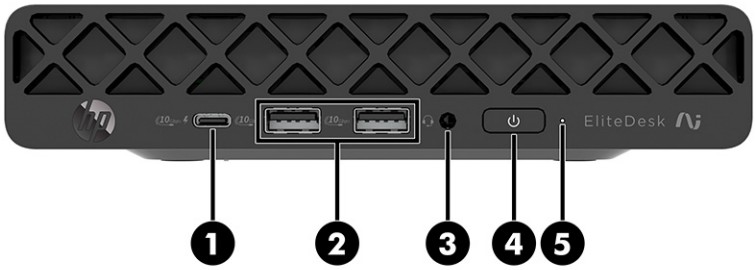

Table 2-1 **Identifying the front panel components**

		Front panel components			
(1)		USB Type-C® 10 Gbps port with HP Sleep and Charge	(4)		Power button*
(2)		USB 10 Gbps ports (2) NOTE: Use a standard USB Type-A charging cable or cable adapter (purchased separately) when charging a small external device such as a smartphone.	(5)		Hard drive activity light
(3)		Audio-out (headphone)/Audio-in (microphone) combo jack**			

*The light on the power button is normally white when the power is on. If the light blinks red, the computer displays a diagnostic code to indicate a problem. See the Interpreting POST diagnostic front panel lights and audible codes on page 96 to interpret the code.

**The combo jack supports headphones, line output devices, microphones, line input devices, or CTIA-style headsets.

Rear panel components

Use the illustration and table to identify the rear panel components.

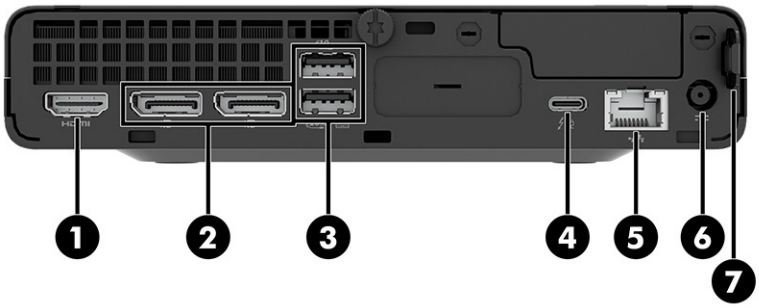

Table 2-2 Identifying the rear panel components

		Rear panel components			
(1)	HDMI	HDMI port	(5)		RJ-45 (network) jack
(2)		DisplayPort monitor connectors (2)	(6)		Power connector
(3)	10Gbps	USB 10 Gbps ports (2) Connect a USB device, provide high-speed data transfer, and (for select products) charge small devices (such as a smartphone) when the computer is on or in sleep mode. NOTE: Use a standard USB Type-A charging cable or cable adapter (purchased separately) when charging a small external device.	(7)		Padlock or security cable loop
(4)		USB Type-C port with HP Sleep and Charge Connects a USB device, provides data transfer, and charges small devices (such as a smartphone), even when the computer is off. NOTE: Use a standard USB Type-C charging cable or cable adapter (purchased separately) when charging a small external device. – and – Connects a display device that has a USB Type-C connector, providing DisplayPort output.			

NOTE: Your model might have additional ports available from HP.

When a graphics card is installed in one of the system board slots, you can use the video connectors on the graphics card or the integrated graphics on the system board. The specific graphics card installed and software configuration determine the behavior.

You can disable the system board graphics by changing settings in BIOS F10 Setup.

Serial number location

Each computer has a unique serial number and a product ID number that are located on the exterior of the computer. Keep these numbers available when contacting customer service for assistance.

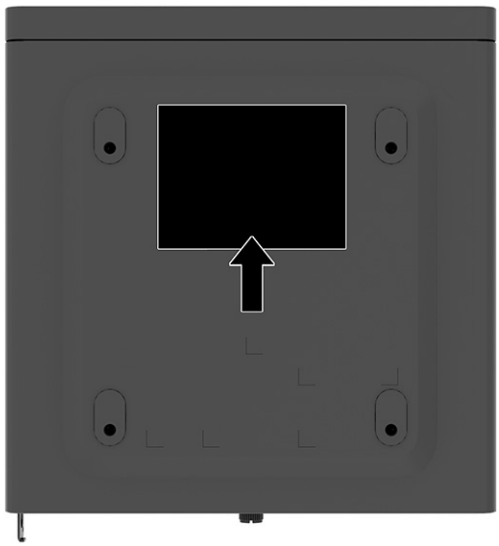

Changing from desktop to tower orientation

You can use the computer in a tower orientation with an optional tower stand that you can purchase from HP.

NOTE: To stabilize the computer in a tower orientation, HP recommends the use of the optional tower stand.

1. Remove or disengage any security devices that prohibit opening the computer.
2. Remove all removable media, such as compact discs and USB flash drives, from the computer.
3. Turn off the computer properly through the operating system, and turn off any external devices.
4. Disconnect the power cord from the AC outlet and disconnect any external devices.

5. Position the computer so that its right side faces up, and place the computer in the optional stand.

6. Reconnect the power cord and any external devices, and then turn on the computer.

NOTE: Be sure that at least 10.2 centimeters (4 inches) of space on all sides of the computer remains clear and free of obstructions.

7. Lock any security devices that were disengaged before the computer was moved.

3 Illustrated parts catalog

Use this information to determine the spare parts that are available for the computer.

NOTE: HP continually improves and changes product parts. For complete and current information about supported parts for your computer, go to https://partsurfer.hp.com/, select your country or region, and then follow the on-screen instructions.

Computer major components

Use this illustration and table to identify the computer major components.

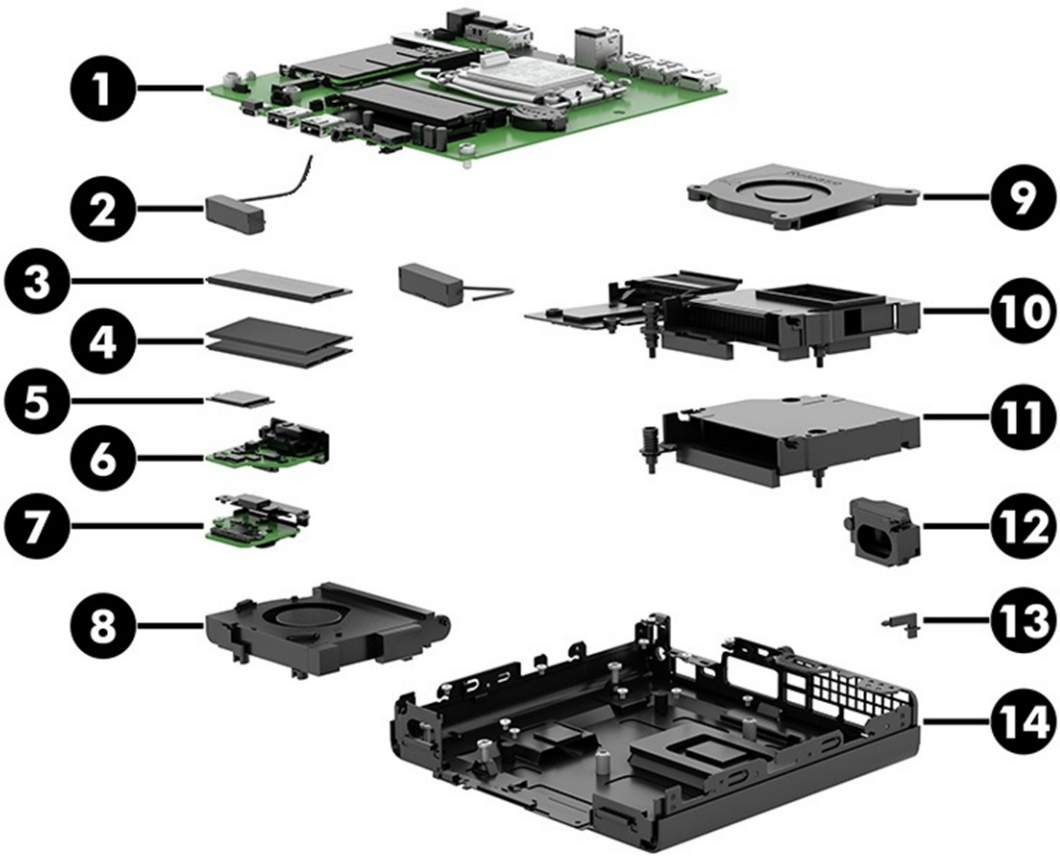

Table 3-1 Computer major components and their descriptions

Item	Description	CSR category*	Spare part number
(1)	System board		
	Intel® Core™ Ultra 9 386H processor for use in models with a standard BIOS	N	Q00282-601
	Intel Core Ultra 9 386H processor for use in models with a NetClone BIOS	N	Q00295-601

Table 3-1 Computer major components and their descriptions (continued)

Item	Description	CSR category*	Spare part number
	Intel Core Ultra 7 366H processor for use in models with a standard BIOS	N	Q00290-601
	Intel Core Ultra 7 366H processor for use in models with a NetClone BIOS	N	Q00303-601
	Intel Core Ultra 7 356H processor for use in models with a standard BIOS (PTLM)	N	Q00293-601
	Intel Core Ultra 7 356H processor for use in models with a NetClone BIOS (PTLM)	N	Q00306-601
	Intel Core Ultra 7 356H processor for use in models with a standard BIOS (PTLPG)	N	Q00289-601
	Intel Core Ultra 7 356H processor for use in models with a NetClone BIOS (PTLPG)	N	Q00302-601
	Intel Core Ultra 5 336H processor for use in models with a standard BIOS (PTLM)	N	Q00286-601
	Intel Core Ultra 5 336H processor for use in models with a NetClone BIOS (PTLM)	N	Q00299-601
	Intel Core Ultra 5 336H processor for use in models with a standard BIOS (PTLPG)	N	Q00283-601
	Intel Core Ultra 5 336H processor for use in models with a NetClone BIOS (PTLPG)	N	Q00296-601
	Intel Core Ultra 5 335 processor for use in models with a standard BIOS	N	Q00285-601
	Intel Core Ultra 5 335 processor for use in models with a NetClone BIOS	N	Q00298-601
	Intel Core Ultra 5 325 processor for use in models with a standard BIOS	N	Q00284-601
	Intel Core Ultra 5 325 processor for use in models with a NetClone BIOS	N	Q00297-601
	Intel Core Ultra 5 322 processor for use in models with a standard BIOS	N	Q00291-601
	Intel Core Ultra 5 322 processor for use in models with a NetClone BIOS	N	Q00304-601
(2)	**Antenna**	B	P34934-001
(3)	**Solid-state drive (SSD)**		
	2 TB, PCIe-5 × 4	A	P73031-001
	2 TB, PCIe-5 × 4 (non-Micron [nM])	A	P41682-001
	2 TB, PCIe-5 × 4 (self-encrypting drive [SED])	A	P90258-001
	1 TB, PCIe-5 × 4, SED	A	P90257-001
	1 TB, PCIe-5 × 4	A	P73030-001
	1 TB, PCIe-5 × 4 (nM)	A	P32587-001
	1 TB, PCIe-4 × 4	A	N77394-001
	1 TB, PCIe-4 × 4 (Not Made in China [NMIC])	A	P17111-001
	512 GB, PCIe-5 × 4, SED	A	P86946-001
	512 GB, PCIe-5 × 4	A	P73029-001
	512 GB, PCIe-4 × 4	A	N77392-001
	256 GB, PCIe-4 × 4, SED	A	N35225-001

Table 3-1 Computer major components and their descriptions (continued)

Item	Description	CSR category*	Spare part number
	256 GB, PCIe-4 × 4	A	N77391-001
(4)	**Memory modules** (SODIMM, DDR5-5600)		
	32 GB (NMIC)	A	N97399-001
	32 GB (nM)	A	N77400-001
	24 GB (nM)	A	P55196-001
	16 GB (nM)	A	N77399-001
	8 GB (nM)	A	N77398-001
	Memory (DDR5-6400)		
	32 GB (nM)	A	P32320-001
	16 GB (nM)	A	P32319-001
(5)	**WLAN modules**		
	Intel BE211 Wi-Fi® 7 + Bluetooth® 6.0, vPro	A	P36620-001
	Intel BE211 Wi-Fi 7 + Bluetooth 6.0, non-vPro	A	P36621-001
	Realtek RTC8852CE Wi-Fi 6E + Bluetooth 5.3	A	N19618-001
(6)	**Flex I/O connector board (board-to-board)**		
	HP DisplayPort 2.1 Flex IO v3	C	P27712-001
	HP VGA Flex IO v3	C	P27714-001
	HP HDMI 2.1 Flex IO v3	C	P27713-001
	HP Dual Type-A 3.2 Gen 1 2nd Flex IO v3	C	P37127-001
	HP Serial Port 2nd Flex IO v3	C	N07478-001
	HP Dual Type-C 3.2 Gen2 15W Out Flex IO v3	C	P27711-001
	2.5 Gbe NIC	C	P07166-001
	Thunderbolt™ 4	C	Q09568-001
	Graphics boards		
	NVIDIA® GeForce RTX™ 5050	B	P84065-001
(7)	**Flex I/O connector board**		
	Dual Type-A 3.2 Gen 1 Flex IO v2	A	P39360-001
	HP Serial Port Flex IO v3	A	P37040-001
	HP Dual Mini DisplayPort Video Port Extender	A	P39602-001
	1 GbE USB NIC	A	M27481-002
(8)	**Fan**		
	Models with UMA graphics	A	P34938-001
	Models with discrete graphics	A	P35211-001
(9)	**Fan (second fan)**	A	P35210-001

Table 3-1 Computer major components and their descriptions (continued)

Item	Description	CSR category*	Spare part number
	Heat sink		
(10)	For use in models with discrete graphics	C	Q00280-001
(11)	For use in 65 W models	C	Q00279-001
	For use in 40 W models	C	Q00278-001
(12)	**Speaker**	A	P35215-001
(13)	**Ambient (thermal) sensor**	A	P34939-001
(14)	**System chassis**		not available as a spare part
	SSD board (not illustrated)	A	P35214-001
	I/O board for NVIDIA GeForce RTX 5050 (not illustrated)	B	P84066-001

Miscellaneous parts

To identify the various computer parts, use this table.

Table 3-2 Miscellaneous parts and their descriptions

Description	Spare part number
Front bezel	P54327-001
Bezel dust filter	P34942-001
Stand assembly	768430-001
SSD latch (toolless)	P37117-001
Adapters	
HP USB-C to HDMI 2.0 Adapter	935325-001
Cable lock	840158-001
Dual VESA sleeve	N68878-001
Ambient sensor	P34939-001
Thunderbolt 4 Gen3 40 Gbps, 1 m (3.3 ft) cable	M91121-001
HP keyed cable lock (10 mm)	840158-001
Adapters	
DisplayPort-to-LCD	487562-001
HDMI 1.4-to-HDMI 2.0 (1.8 m)	L05069-001
Mini DisplayPort (Mini DP)-to-DisplayPort	L76565-001
Micro-HDMI-to-HDMI	P44273-001
Antenna	
Antenna bar	M11547-001
Dual internal WLAN antenna	P34934-001

Table 3-2 **Miscellaneous parts and their descriptions (continued)**

Description	Spare part number
External	P34935-001
Mounting kit	
Quick Release 2	L57512-002
Plastic port cover	P37186-001
Shelf bracket	L03412-002
Mouse	
HP 175M wired mouse	P54989-001
HP 175M antimicrobial wired mouse	P54981-001
Keyboard (country codes are listed following this table)	
HP 175K wired keyboard	P54981-001
HP 175K antimicrobial wired keyboard	P54995-AA1
HP 275C wireless keyboard and mouse	P54997-001
Power adapters	
180 W USB-C, smart, 7.4 mm	L56595-001
180 W, smart, PFC, slim, straight, 7.4 mm	P55563-001
150 W, smart, PFC, slim, straight, 7.4 mm	P55550-001
150 W USB-C, smart, 7.4 mm	L68323-001
120 W, smart, PFC, slim barrel	L57117-001
120 W, smart, PFC, slim, straight, 7.4 mm	P55548-001
100 W, USB-C, GaN, 2 pin, wall mount, 2.0 m (6.5 ft), FD	P58631-001
100 W, USB-C, GaN, 2 pin, wall mount, 2.0 m (6.5 ft), FX	P58632-001
90 W, PFC, straight, 7.4 mm	P55545-001
90 W, smart, PFC, slim barrel	L40098-001
Power cord (C5, 1.8 m [6 ft])	
Argentina	L19357-002
Australia	L19358-002
Brazil	L19359-002
Denmark	L19360-002
Denmark (halogen free)	M75269-001
Europe (Austria, Belgium, Finland, France, Germany, the Netherlands, Norway, and Sweden)	L19361-002
Europe (Austria, Belgium, Finland, France, Germany, the Netherlands, Norway, and Sweden) (halogen free)	M75279-001
Israel	L19362-002
Israel (halogen free)	M75271-001
India	L19363-002

Table 3-2 Miscellaneous parts and their descriptions (continued)

Description	Spare part number
Italy	L19364-002
Japan	L19365-002
Japan, bundle	P15102-001
Korea	L19366-002
North America	L19367-002
The People's Republic of China (PRC)	L19368-002
South Africa	L19369-002
Switzerland	L19370-002
Switzerland (halogen free)	M75275-001
Thailand	L19371-002
Thailand, bundle	M85420-001
Taiwan	L19372-002
The United Kingdom	L19373-002
The United Kingdom (halogen free)	M75277-001
Power cord (C5, 1.0 m [3.3 ft])	
Argentina	L19357-001
Australia	L19358-001
Brazil	L19359-001
Denmark	L19360-001
Denmark (halogen free)	M79264-001
Europe (Austria, Belgium, Finland, France, Germany, the Netherlands, Norway, and Sweden)	L19361-001
Europe (Austria, Belgium, Finland, France, Germany, the Netherlands, Norway, and Sweden) (halogen free)	M79266-001
Israel	L19362-001
Israel (halogen free)	M82712-001
India	L19363-001
Italy	L19364-001
Japan	L19365-001
Korea	L19366-001
North America	L19367-001
The PRC	L19368-001
South Africa	L19369-001
Switzerland	L19370-001
Switzerland (halogen free)	M79265-001
Thailand	L19371-001

Table 3-2 **Miscellaneous parts and their descriptions (continued)**

Description	Spare part number
Thailand, bundle	M85418-001
Taiwan	L19372-001
The United Kingdom	L19373-001
The United Kingdom (halogen free)	M82711-001
Power cord (AC, 1.8 m [6 ft])	
Argentina	M82819-001
Australia	M82822-001
Brazil	M82820-001
Denmark	M82829-001
Europe (Austria, Belgium, Finland, France, Germany, the Netherlands, Norway, and Sweden)	M82827-001
Israel	M82830-001
India	M82824-001
Italy	M82831-001
Japan	M82825-001
North America	M82821-001
The PRC	M82823-001
South Africa	M82832-001
Switzerland	M82833-001
Taiwan	M82826-001
The United Kingdom	M82834-001
Power cord (C5, conventional, red, 6.0 ft [1.83 m])	P79415-001
Power cord (C13 1.8 m [6 ft], halogen free)	
Denmark	P23965-001
Europe	P23967-001
Israel	P23969-001
Switzerland	P23966-001
The United Kingdom	P23968-001
Flange premium straight desktop	P10529-001
Duckhead power cord (non-standard, halogen free)	
Argentina	P57788-001
Australia	P57784-001
Europe (Austria, Belgium, Finland, France, Germany, the Netherlands, Norway, and Sweden)	P57782-001
India	P57790-001
Japan	L33157-001

Table 3-2 Miscellaneous parts and their descriptions (continued)

Description	Spare part number
PRC	P57787-001
South Korea	P57785-001
Thailand	P57786-001
United Kingdom	P57783-001

Table 3-3 Spare part country codes

For use in country or region	Spare part number	For use in country or region	Spare part number	For use in country or region	Spare part number
Belgium	-A41	Iceland	-DD1	Saudi Arabia	-171
Brazil	-201	India	-D61	Slovenia	-BA1
Bulgaria	-261	Israel	-BB1	South Korea	-AD1
Chile	-161	Italy	-061	Spain	-071
Czech Republic/Slovakia	-FL1	Japan	-291	Switzerland	-BG1
Denmark, Finland, and Norway	-DH1	Kazakhstan	-DF1	Taiwan	-AB1
French Canada	-DB1	The Netherlands	-B31	Thailand	-281
France	-051	Northern Africa	-FP1	Turkey	-141
Germany	-041	Portugal	-131	Ukraine	-BD1
Greece	-151	Romania	-271	United Kingdom	-031
Hungary	-211	Russia	-251	United States	-001

4 Routine care, drive guidelines, and disassembly preparation

This information provides general service information for the computer. Adherence to the procedures and precautions is essential for proper service.

IMPORTANT: When the computer is plugged into an AC power source, DC voltage is always applied to the system board. You must disconnect the power cord from the power source before opening the computer to prevent electric shock, system board, or component damage.

Electrostatic discharge information

A sudden discharge of static electricity from your finger or other conductor can destroy static-sensitive devices or microcircuitry. Often the spark is neither felt nor heard, but damage occurs.

An electronic device exposed to electrostatic discharge (ESD) might not appear to be affected at all and can work perfectly throughout a normal cycle. The device might function normally for a while, but it has been degraded in the internal layers, reducing its life expectancy.

Networks built into many integrated circuits provide some protection, but in many cases, the discharge contains enough power to alter device parameters or melt silicon junctions.

IMPORTANT: To prevent damage to the device when you are removing or installing internal components, observe these precautions:

- Keep components in their electrostatic-safe containers until you are ready to install them.
- Before touching an electronic component, discharge static electricity by using the guidelines described in this section.
- Avoid touching pins, leads, and circuitry. Handle electronic components as little as possible.
- If you remove a component, place it in an electrostatic-safe container.

Generating static electricity

This table shows how humidity affects the electrostatic voltage levels generated by different activities. A product can be degraded by 700 V of static electricity.

- Different activities generate different amounts of static electricity.
- Static electricity increases as humidity decreases.

Multiple electronic components can be packaged in plastic tubes, trays, or polystyrene foam.

Table 4-1 **Static electricity occurrence based on activity and humidity**

	Relative humidity 55%	Relative humidity 40%	Relative humidity 10%
Event			

Table 4-1 Static electricity occurrence based on activity and humidity (continued)

	Relative humidity 55%	Relative humidity 40%	Relative humidity 10%
Walking across carpet	7500 V	15,000 V	35,000 V
Walking across vinyl floor	3000 V	5000 V	12,000 V
Motions of bench worker	400 V	800 V	6000 V
Removing DIPs (dual in-line packages) from plastic tube	400 V	700 V	2000 V
Removing DIPs from vinyl tray	2000 V	4000 V	11,500 V
Removing DIPs from polystyrene foam	3500 V	5000 V	14,500 V
Removing bubble pack from PCB (printed circuit board)	7000 V	20,000 V	26,500 V
Packing PCBs in foam-lined box	5000 V	11,000 V	21,000 V

Preventing electrostatic damage to equipment

Many electronic components are sensitive to ESD. Circuitry design and structure determine the degree of sensitivity. The following packaging and grounding precautions are necessary to prevent static electricity damage to electronic components.

- To avoid hand contact, transport products in static-safe containers such as tubes, bags, or boxes.
- Protect all electrostatic parts and assemblies with conductive or approved containers or packaging.
- Keep electrostatic-sensitive parts in their containers until they arrive at static-free stations.
- Place items on a grounded surface before removing them from their container.
- Always be properly grounded when touching a sensitive component or assembly.
- Avoid contact with pins, leads, or circuitry.
- Place reusable electrostatic-sensitive parts from assemblies in protective packaging or conductive foam.

Personal grounding methods and equipment

Use this equipment to prevent static electricity damage to electronic components.

- **Wrist straps** are flexible straps with a maximum of 1 MΩ ±10% resistance in the ground cords. To provide proper ground, wear a strap snug against bare skin. Verify that the ground cord is connected and fits snugly into the banana plug connector on the grounding mat or workstation.
- **Heel straps/Toe straps/Boot straps** can be used at standing workstations and are compatible with most types of shoes or boots. On conductive floors or dissipative floor mats, use them on both feet with a maximum of 1 MΩ ±10% resistance between the operator and ground.

Table 4-2 Static shielding protection levels

Static shielding protection levels	
Method	Voltage

Table 4-2 **Static shielding protection levels (continued)**

Static shielding protection levels	
Antistatic plastic	1500 V
Carbon-loaded plastic	7500 V
Metalized laminate	15,000 V

Grounding the work area

To prevent static damage at the work area, use these precautions.

- Cover the work surface with approved static-dissipative material. Provide a wrist strap connected to the work surface and properly grounded tools and equipment.
- Use static-dissipative mats, foot straps, or air ionizers to give added protection.
- Handle electrostatic sensitive components, parts, and assemblies by the case or PCB laminate. Handle them only at static-free work areas.
- Turn off power and input signals before inserting and removing connectors or test equipment.
- Use fixtures made of static-safe materials when fixtures must directly contact dissipative surfaces.
- Keep work area free of nonconductive materials such as ordinary plastic assembly aids and polystyrene foam.
- Use field service tools, such as cutters, screwdrivers, and vacuums, that are conductive.

Recommended materials and equipment

HP recommends these materials and equipment to prevent static electricity.

- Antistatic tape
- Antistatic smocks, aprons, or sleeve protectors
- Conductive bins and other assembly or soldering aids
- Conductive foam
- Conductive tabletop workstations with ground cord of 1 MΩ ±10% resistance
- Static-dissipative table or floor mats with hard tie to ground
- Field service kits
- Static awareness labels
- Wrist straps and footwear straps providing 1 MΩ ±10% resistance
- Material handling packages
- Conductive plastic bags
- Conductive plastic tubes
- Conductive tote boxes

- Opaque shielding bags
- Transparent metallized shielding bags
- Transparent shielding tubes

Operating guidelines

This information details how to prevent overheating and help prolong the life of the computer.

- Keep the computer away from excessive moisture, direct sunlight, and extremes of heat and cold.
- Operate the computer on a sturdy, level surface. Leave a 10.2 cm (4 inch) clearance on all vented sides of the computer and above the monitor to permit the required airflow.
- Do not restrict the airflow into the computer by blocking any vents or air intakes. Do not place the keyboard, with the keyboard feet down, directly against the front of the desktop unit as this also restricts airflow.
- Occasionally clean the air vents on all vented sides of the computer. Lint, dust, and other foreign matter can block the vents and limit the airflow. Be sure to unplug the computer before cleaning the air vents.
- Do not operate the computer with the cover or side panel removed.
- Do not stack computers on top of each other or place computers so near each other that they are subject to each other's recirculated or preheated air.
- If the computer is to be operated within a separate enclosure, intake and exhaust ventilation must be provided on the enclosure, and the same operating guidelines listed previously still apply.
- Keep liquids away from the computer and keyboard.
- Do not cover the ventilation slots on the monitor with any type of material.
- Install or enable power management functions of the operating system or other software, including sleep states.

Routine care

Use this information to properly care for your computer.

General cleaning safety precautions

Use this information to safely clean your computer.

⚠ CAUTION: To prevent electric shock or damage to components, never clean a product while it is turned on or plugged in.

- Never use solvents or flammable solutions to clean the computer.
- Never immerse any parts in water or cleaning solutions; apply any liquids to a clean cloth and then use the cloth on the component.
- Always unplug the computer when cleaning with liquids or damp cloths.
- Always unplug the computer before cleaning the keyboard, mouse, or air vents.

- Disconnect the keyboard before cleaning it.
- Wear safety glasses equipped with side shields when cleaning the keyboard.

Removing dirt and debris from your computer

Here are the recommended steps to clean dirt and debris from your computer.

1. Wear disposable gloves made of latex (or nitrile gloves, if you are latex-sensitive) when cleaning the surfaces.
2. Turn off your device and unplug the power cord and other connected external devices. Remove any installed batteries from items such as wireless keyboards.

   CAUTION: To prevent electric shock or damage to components, never clean a product while it is turned on or plugged in.

3. Moisten a microfiber cloth with water. The cloth should be moist, but not dripping wet.

   IMPORTANT: To avoid damaging the surface, avoid abrasive cloths, towels, and paper towels.

4. Wipe the exterior of the product gently with the moistened cloth.

   IMPORTANT: Keep liquids away from the product. Avoid getting moisture in any openings. If liquid makes its way inside your HP product, it can cause damage to the product. Do not spray liquids directly on the product. Do not use aerosol sprays, solvents, abrasives, or cleaners containing hydrogen peroxide or bleach that might damage the finish.

5. Start with the display (if applicable). Wipe carefully in one direction, and move from the top of the display to the bottom. Finish with any flexible cables, like power cord, keyboard cable, and USB cables.
6. Be sure that surfaces have completely air-dried before turning the device on after cleaning.
7. Discard the gloves after each cleaning. Clean your hands immediately after you remove the gloves.

See Cleaning your computer with a disinfectant on page 23 for recommended steps to clean the high-touch, external surfaces on your computer to help prevent the spread of harmful bacteria and viruses.

Cleaning your computer with a disinfectant

The World Health Organization (WHO) recommends cleaning surfaces, followed by disinfection, as a best practice for preventing the spread of viral respiratory illnesses and harmful bacteria.

After cleaning the external surfaces of your computer using the steps in Removing dirt and debris from your computer on page 23, you might also choose to clean the surfaces with a disinfectant. A disinfectant that is within HP's cleaning guidelines is an alcohol solution consisting of 70% isopropyl alcohol and 30% water. This solution is also known as rubbing alcohol and is sold in most stores.

Follow these steps when disinfecting high-touch, external surfaces on your computer:

1. Wear disposable gloves made of latex (or nitrile gloves, if you are latex-sensitive) when cleaning the surfaces.

2. Turn off your device and unplug the power cord and other connected external devices. Remove any installed batteries from items such as wireless keyboards.

CAUTION: To prevent electric shock or damage to components, never clean a product while it is turned on or plugged in.

3. Moisten a microfiber cloth with a mixture of 70% isopropyl alcohol and 30% water. The cloth should be moist, but not dripping wet.

CAUTION: Do not use any of the following chemicals or any solutions that contain them, including spray-based surface cleaners: bleach, peroxides (including hydrogen peroxide), acetone, ammonia, ethyl alcohol, methylene chloride, or any petroleum-based materials, such as gasoline, paint thinner, benzene, or toluene.

IMPORTANT: To avoid damaging the surface, avoid abrasive cloths, towels, and paper towels.

4. Wipe the exterior of the product gently with the moistened cloth.

IMPORTANT: Keep liquids away from the product. Avoid getting moisture in any openings. If liquid makes its way inside your HP product, it can cause damage to the product. Do not spray liquids directly on the product. Do not use aerosol sprays, solvents, abrasives, or cleaners containing hydrogen peroxide or bleach that might damage the finish.

5. Start with the display (if applicable). Wipe carefully in one direction, and move from the top of the display to the bottom. Finish with any flexible cables, like power cord, keyboard cable, and USB cables.

6. Be sure that surfaces have completely air-dried before turning the device on after cleaning.

7. Discard the gloves after each cleaning. Clean your hands immediately after you remove the gloves.

Cleaning the computer case

Follow all safety precautions before cleaning the computer case.

To clean the computer case, follow these procedures:

NOTE: You can also use these procedures to clean the tops of the keys, keyboard body, monitor body, or mouse body.

- To remove light stains or dirt, use plain water with a clean, lint-free cloth or swab.
- For stronger stains, use a mild dishwashing liquid diluted with water. Rinse well by wiping it with a cloth or swab dampened with clear water.
- For stubborn stains, use isopropyl (rubbing) alcohol. No rinsing is needed because the alcohol evaporates quickly and does not leave a residue.
- After cleaning, always wipe the unit with a clean, lint-free cloth.
- Occasionally clean the air vents on the computer. Lint and other foreign matter can block the vents and limit the airflow.

Cleaning the keyboard

Use this information to properly clean the keyboard. Follow all safety precautions before cleaning the keyboard.

To clean the tops of the keys or the keyboard body, follow the procedures described in Cleaning the computer case on page 24.

When cleaning debris from under the keys, review all rules in General cleaning safety precautions on page 22 before following these procedures.

CAUTION: Use safety glasses equipped with side shields before attempting to clean debris from under the keys.

- You can remove visible debris underneath or between the keys by vacuuming or shaking.
- You can use canned, pressurized air to clean debris from under the keys. Use caution because too much air pressure can dislodge lubricants applied under the wide keys.
- If you remove a key, use a specially designed key puller to prevent damage to the keys. This tool is available through many electronic supply outlets.

IMPORTANT: Never remove a wide leveled key (like the space bar) from the keyboard. If these keys are improperly removed or installed, the keyboard might not function properly.

- You can clean under a key with a swab moistened with isopropyl alcohol and squeezed out. Be careful not to wipe away lubricants necessary for proper key functions. Use tweezers to remove any fibers or dirt in confined areas. Allow the parts to air dry before reassembly.

Cleaning the monitor

Follow all safety precautions before cleaning dirt and debris from your computer. Use this information to properly clean the monitor.

- Wipe the monitor screen with a clean cloth moistened with water or with a towelette designed for cleaning monitors. Do not use sprays or aerosols directly on the screen; the liquid can seep into the housing and damage a component. Never use solvents or flammable liquids on the monitor.
- To clean the monitor body, follow the procedures in Cleaning the computer case on page 24.

Cleaning the mouse

Follow all safety precautions before cleaning your mouse. Use this information to properly clean the mouse.

To clean the mouse body, follow the procedures in Cleaning the computer case on page 24.

Service considerations

Keep these considerations in mind during the disassembly and assembly of the computer.

Tools and software requirements

Servicing the computer requires these tools.

- Torx T-15 screwdriver
- Flat-bladed screwdriver (can sometimes be used in place of the Torx screwdriver)
- Phillips PH1 screwdriver
- Nonconductive, nonmarking pry tool

- Diagnostics software

Screws

The screws used in the computer are not interchangeable. They could have standard or metric threads and might be of different lengths.

If you use an incorrect screw during the reassembly process, it can damage the unit. HP strongly recommends that you keep all screws that you remove during disassembly with the removed part and then return them to their proper locations.

IMPORTANT: As you remove each subassembly from the computer, place it away from the work area to prevent damage.

Cables and connectors

Use this information to properly handle cables.

Apply only the tension required to seat or unseat the cables during insertion or removal from the connector. Handle cables by the connector whenever possible. In all cases, avoid bending or twisting the cables, and route the cables so that they cannot be caught or snagged by parts being removed or replaced.

Graphics cards adapter cables

To prevent electrical issues, only use high-quality, HP certified 12VHPWR adapter cables. Be sure to fully insert the 12VHPWR connector into a graphics card until it clicks into place. A loose connection can cause overheating and could be a potential fire hazard. Do not sharply bend the cable near the connector. Maintain at least a 35 mm bending radius to prevent strain on the connection. Check for discoloration, burnt smell, or signs of damage before and after use. If you find any abnormalities, immediately stop using the cable.

IMPORTANT: When servicing this computer, be sure to place cables in their proper location during the reassembly process. Improper cable placement can damage the computer.

Hard drives

Handle hard drives as delicate, precision components, and avoid all physical shock and vibration. This advice applies to failed drives as well as replacement spares.

- If a drive must be mailed, place the drive in a bubble-pack mailer or other suitable protective packaging and label the package “Fragile: Handle With Care.”
- Do not remove hard drives from the shipping package for storage. Keep hard drives in their protective packaging until they are actually mounted in the computer.
- Avoid dropping drives from any height onto any surface.
- If you are inserting or removing a hard drive, turn off the computer. Do not remove a hard drive while the computer is on or in standby mode.
- Before handling a drive, ensure that you are discharged of static electricity. While handling a drive, avoid touching the connector.
- Do not use excessive force when inserting a drive.

- Avoid exposing a hard drive to liquids, temperature extremes, or products that have magnetic fields such as monitors or speakers.

Lithium coin cell battery

The battery that comes with the computer provides power to the real-time clock and has a minimum lifetime of approximately three years.

See the removal and replacement chapter for replacement instructions.

WARNING! This computer contains a lithium battery. There is a risk of fire and chemical burn if the battery is handled improperly. Do not disassemble, crush, puncture, short external contacts, dispose of in water or fire, or expose it to temperatures higher than 140°F (60°C). Do not attempt to recharge the battery.

NOTE: Do not dispose of batteries, battery packs, and accumulators with general household waste. To forward them to recycling centers for proper disposal, use the public collection system or return them to HP, their authorized partners, or their agents.

5 Removal and replacement procedures for Customer Self-Repair parts

This chapter provides removal and replacement procedures for Customer Self-Repair parts.

NOTE: The Customer Self-Repair program is not available in all locations. Installing a part that is not supported by the Customer Self-Repair program can void your warranty. Check your warranty to determine whether Customer Self-Repair is supported in your location.

NOTE: The HP Support YouTube Channel (in English) has videos that provide step-by-step removal and replacement instructions for many common parts and models.

Component replacement procedures

Use these procedures to remove and replace computer components.

NOTE: Details about your computer, including the model, serial number, product key, and length of warranty, are on the service tag at the bottom of your computer.

NOTE: HP continually improves and changes product parts. For complete and current information about supported parts for your computer, go to https://partsurfer.hp.com/, select your country or region, and then follow the on-screen instructions.

Make special note of each screw size and location during removal and replacement.

Preparation for disassembly

Use this information to properly prepare to disassemble and reassemble the computer.

See Routine care, drive guidelines, and disassembly preparation on page 19 for initial safety procedures.

1. Turn off the computer. If you are unsure whether the computer is off or in hibernation, turn the computer on, and then shut it down through the operating system.

   IMPORTANT: Turn off the computer before disconnecting any cables.

   Regardless of the power state, voltage is always present on the system board as long as the system is plugged into an active AC outlet. In some systems, the cooling fan is on even when the computer is in the standby or suspend modes. Always disconnect the power cord before servicing a unit.

2. Disconnect the power from the computer by unplugging the power cord from the computer.
3. Disconnect all external devices from the computer.

CAUTION: Beware of sharp edges inside the chassis.

NOTE: During disassembly, label each cable as you remove it, and note its position and routing. Keep all screws with the removed components.

Access panel

Use these procedures to remove the access panel.

IMPORTANT: On workstations, the computer will not turn on if a removable access panel is not installed, and the computer displays error code 3.7.

Before removing the access panel, follow these steps:

- Prepare the computer for disassembly (see Preparation for disassembly on page 28).

Remove the access panel:

- Loosen the thumbscrew **(1)** on the rear of the computer, slide the panel **(2)** forward, and then lift it off the computer.

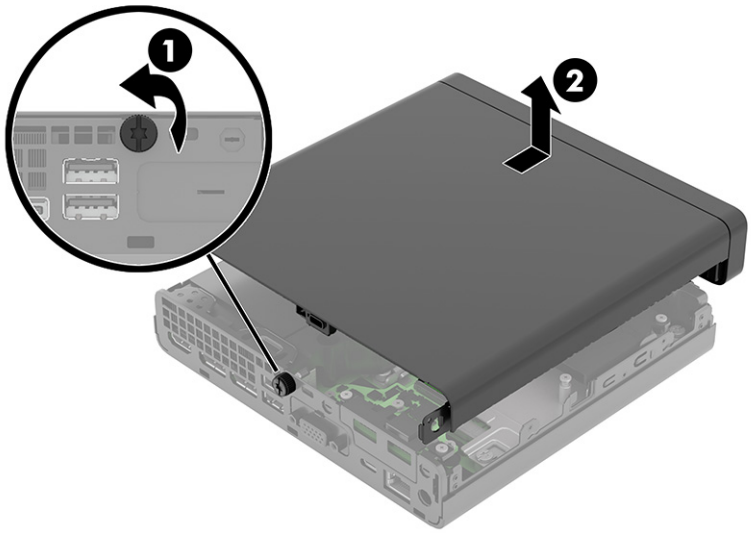

Reverse the removal procedure to install the access panel.

Front bezel and dust filter

Use these procedures to remove the front bezel and dust filter.

Table 5-1 **Front bezel and dust filter descriptions and part numbers**

Description	Spare part number
Front bezel	P54327-001
Dust filter	P34942-001

Before removing the front bezel and dust filter, follow these steps:

1. Prepare the computer for disassembly (see Preparation for disassembly on page 28).
2. Remove the access panel (see Access panel on page 29).

Remove the front bezel and dust filter:

1. Remove the five screws **(1)** that attach the bezel to the access panel.
2. Pull the bezel **(2)** off the computer.

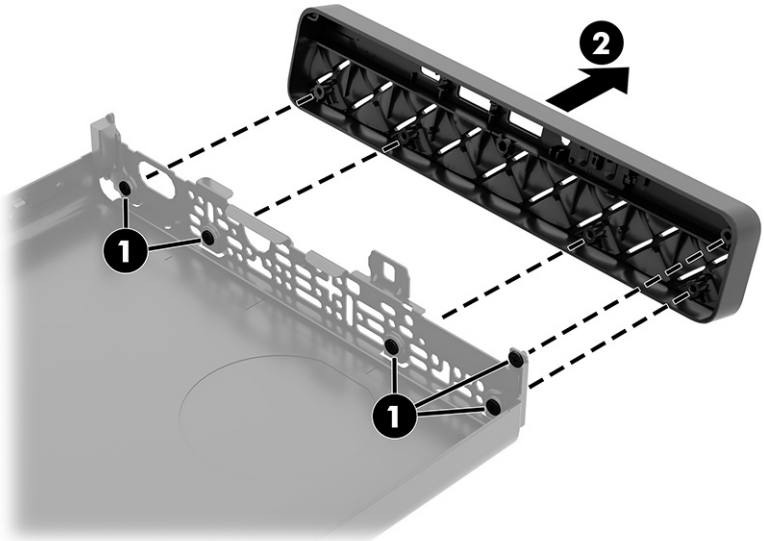

3. To remove the dust filter, pull the filter straight off the front bezel.

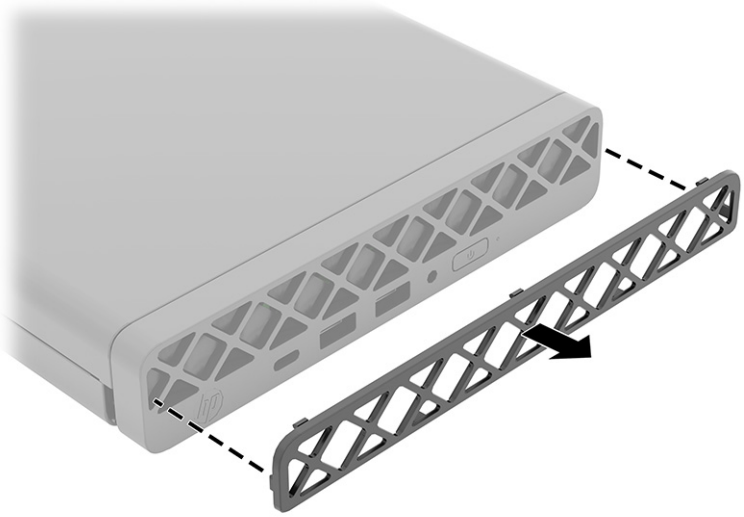

Reverse the removal procedure to install the front bezel and dust filter.

Ambient sensor

Use these procedures to remove the ambient sensor.

Table 5-2 **Ambient sensor description and part number**

Description	Spare part number
Ambient sensor	P34939-001

Before removing the ambient sensor, follow these steps:

1. Prepare the computer for disassembly (see Preparation for disassembly on page 28).
2. Remove the access panel (see Access panel on page 29).

Remove the ambient sensor:

- Disconnect the sensor from the system board connector.

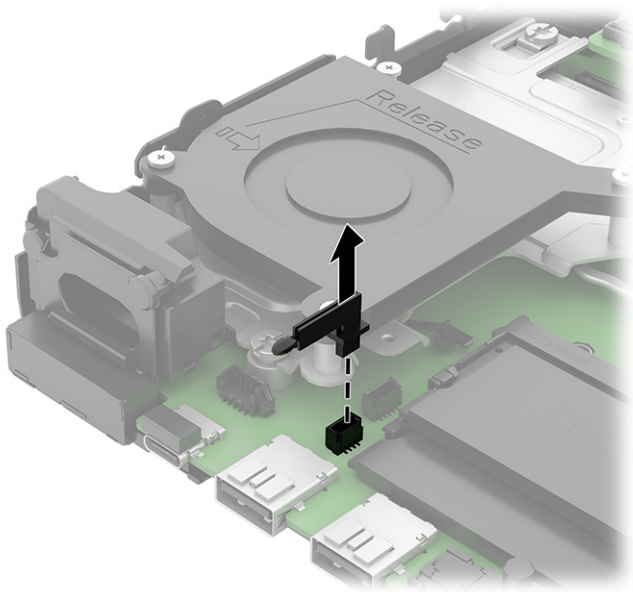

Reverse the removal procedures to replace the ambient sensor.

Speaker

Use these procedures to remove the speaker. A single speaker is located on the left side of the computer behind the front bezel, inside the chassis.

Table 5-3 **Speaker description and part number**

Description	Spare part number
Speaker	P35215-001

Before removing the speaker, follow these steps:

1. Prepare the computer for disassembly (see Preparation for disassembly on page 28).
2. Remove the access panel (see Access panel on page 29).

Remove the speaker:

1. Disconnect the speaker cable from the system board connector **(1)**.
2. From the front of the computer, pull up on the tabs **(2)** that secure the speaker.

3. Lift the speaker **(3)** from the computer.

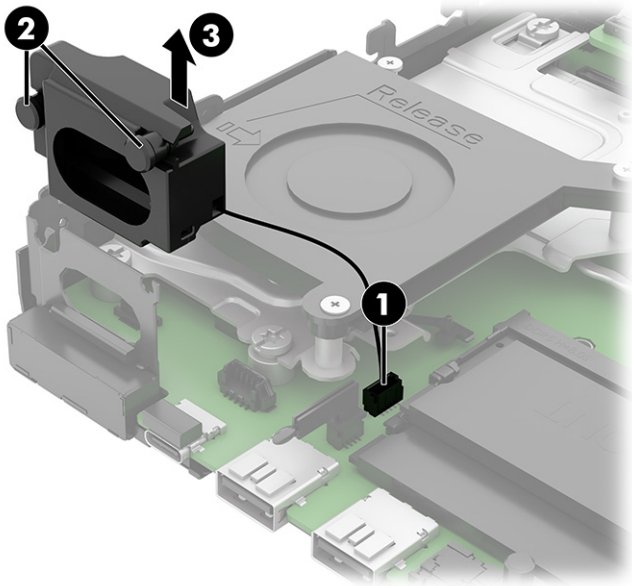

Reverse the removal procedure to install the speaker.

Fan

Use these procedures to remove the fan.

Table 5-4 **Fan description and part number**

Description	Spare part number
Fan	P34938-001

Before removing the fan, follow these steps:

1. Prepare the computer for disassembly (see Preparation for disassembly on page 28).
2. Remove the access panel (see Access panel on page 29).

Remove the fan:

1. Lift the fan **(1)** up, and then disconnect the fan cable **(2)** from the system board.

2. Lift the fan **(3)** out of the computer.

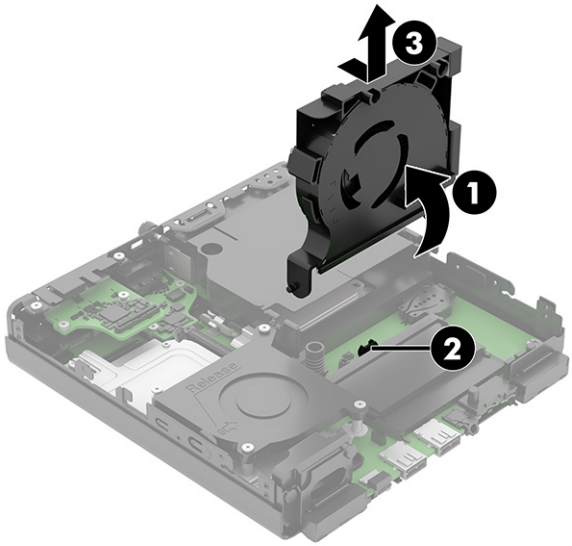

Reverse the removal procedure to install the fan.

Second fan

Use these procedures to remove the second fan.

Table 5-5 **Second fan description and part number**

Description	Spare part number
Fan (second)	P35210-001

Before removing the second smaller fan, follow these steps:

1. Prepare the computer for disassembly (see Preparation for disassembly on page 28).
2. Remove the access panel (see Access panel on page 29).

Remove the fan:

1. If you only need to replace the fan, skip to step 5.
2. Disconnect the fan cable from the system board connector **(1)**.
3. Remove the three Torx screws **(2)** that secure the fan bracket to the computer.

4. Slide the assembly **(3)** back, and then remove the fan and bracket assembly **(4)** from the computer.

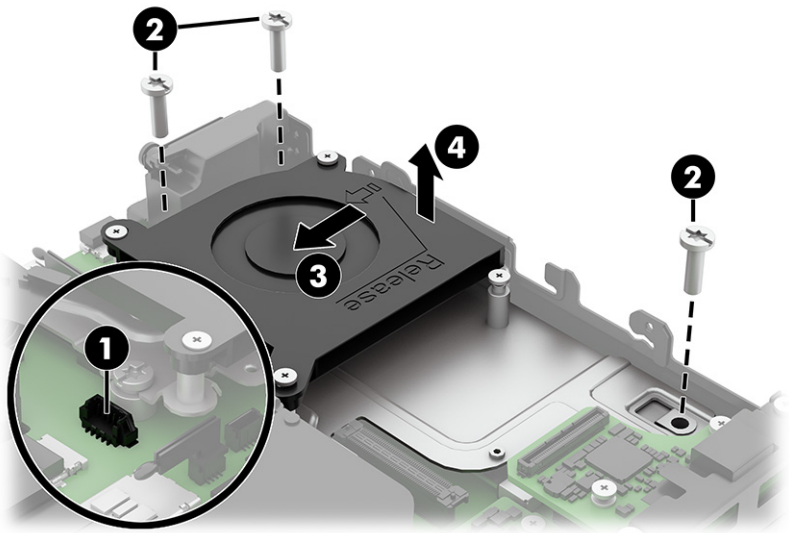

5. To remove the fan from the bracket, remove the three Phillips screws **(1)** that secure the fan to the bracket, and the remove the fan **(2)** from the bracket.

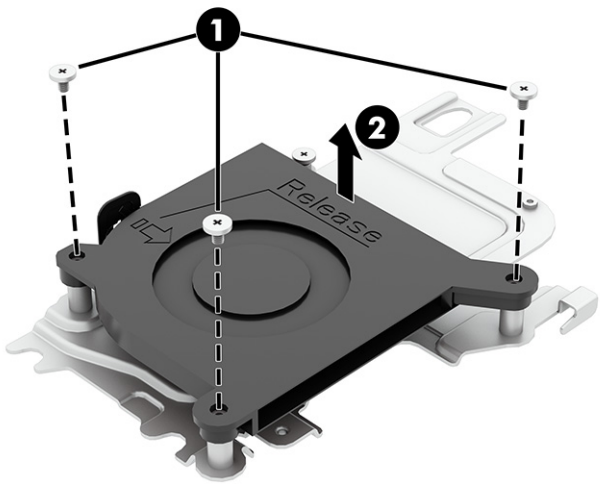

To install the second fan and bracket assembly:

1. Place the assembly **(1)** into the computer.
2. Insert the hook on the bracket onto the metal bar **(2)** on the bottom of the heat sink.
3. Slide the assembly **(3)** toward the side of the computer.
4. Replace the three Torx screws **(4)**.
5. Connect the fan cable to the system board **(5)**.

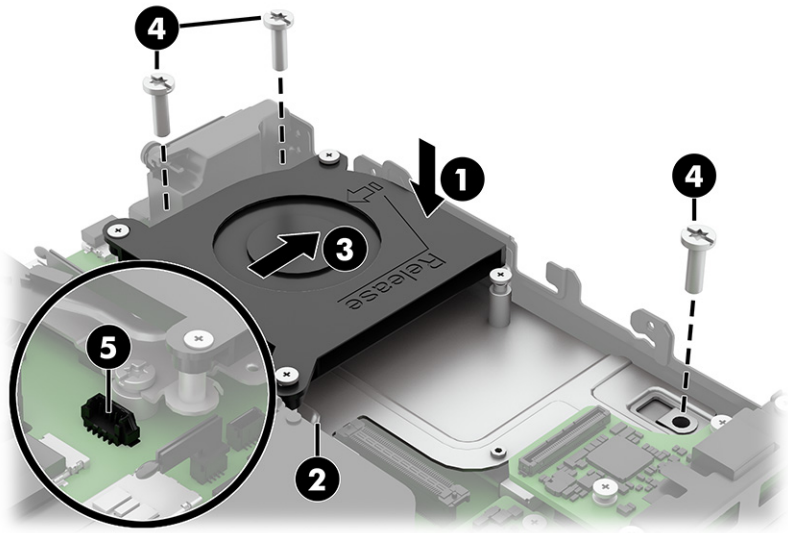

Solid-state drive

Use these procedures to remove the SSD.

Table 5-6 **SSD module descriptions and part numbers**

Description	Spare part number
2 TB, PCIe-5 × 4	P73031-001
2 TB, PCIe-5 × 4 (nM)	P41682-001
2 TB, PCIe-5 × 4 (SED)	P90258-001
1 TB, PCIe-5 × 4, SED	P90257-001
1 TB, PCIe-5 × 4	P73030-001
1 TB, PCIe-5 × 4 (nM)	P32587-001
1 TB, PCIe-4 × 4	N77394-001
1 TB, PCIe-4 × 4 (NMIC)	P17111-001
512 GB, PCIe-5 × 4, SED	P86946-001
512 GB, PCIe-5 × 4	P73029-001
512 GB, PCIe-4 × 4	N77392-001
256 GB, PCIe-4 × 4, SED	N35225-001
256 GB, PCIe-4 × 4	N77391-001

Before removing the SSD, follow these steps:

1. Prepare the computer for disassembly (see Preparation for disassembly on page 28).
2. Remove the access panel (see Access panel on page 29).
3. Remove the second fan (see Second fan on page 33).

Remove the SSD:

1. If the SSD has a cover, lift the cover so you can access the SSD release lever.
2. Lift the plastic green release lever **(1)** on the front of the SSD
3. Pull the SSD **(2)** out of the system board connector.

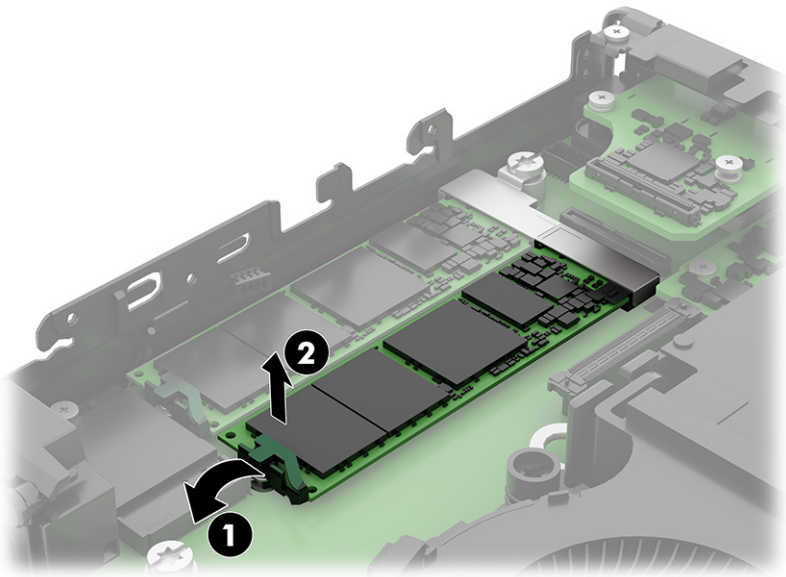

Reverse the removal procedures to replace the SSD.

NOTE: SSD modules are designed with a notch to prevent incorrect insertion.

WLAN module

Use these procedures to remove the WLAN module.

Table 5-7 **WLAN module descriptions and part numbers**

Description	Spare part number
Intel BE211 Wi-Fi® 7 + Bluetooth® 6.0, vPro	P36620-001
Intel BE211 Wi-Fi 7 + Bluetooth 6.0, non-vPro	P36621-001
Realtek RTC8852CE Wi-Fi 6E + Bluetooth 5.3	N19618-001

NOTE: WLAN module appearance can vary.

Before removing the WLAN module, follow these steps:

1. Prepare the computer for disassembly (see Preparation for disassembly on page 28).
2. Remove the access panel (see Access panel on page 29).
3. Remove the second fan (see Second fan on page 33).

Remove the WLAN module:

1. Remove the antenna protector **(1)** from the module.
2. Remove the screw **(2)** that secures the module to the computer.
3. Disconnect the antenna cables **(3)** from the module.

NOTE: The WLAN antenna cable labeled 1/MAIN connects to the WLAN module Main terminal. The WLAN antenna cable labeled 2/AUX connects to the WLAN module Aux terminal.

4. Pull the module **(4)** out of the socket.

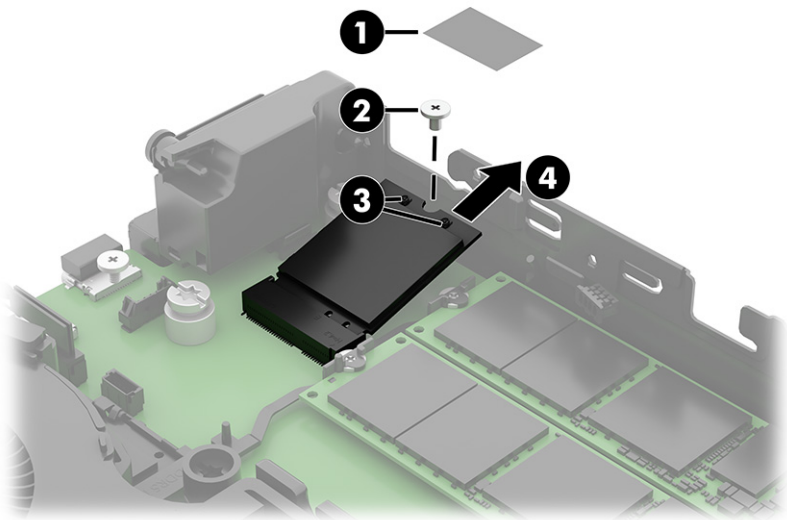

5. If the WLAN antenna is not connected to the terminal on the WLAN module, a protective sleeve must be installed on the antenna connector, as shown in the following illustration.

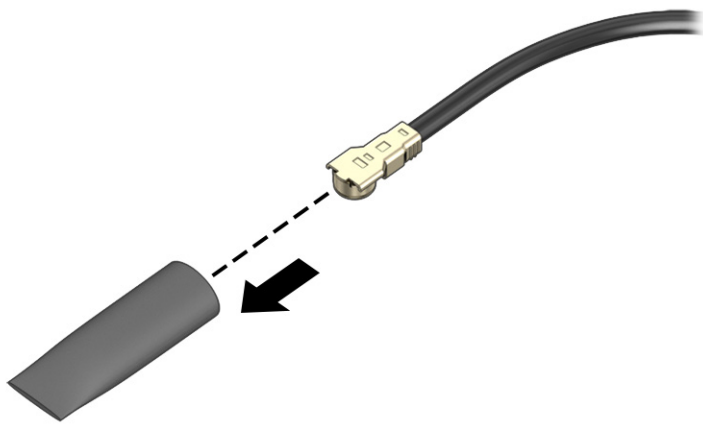

Reverse the removal procedure to install the WLAN module.

NOTE: WLAN modules are designed with a notch to prevent incorrect insertion.

Memory modules (SODIMMs)

use the information in this section to remove the memory modules.

Table 5-8 **Memory module descriptions and part numbers**

Description	Spare part number
Memory (DDR5-5600)	
32 GB (NMIC)	N97399-001
32 GB (nM)	N77400-001
24 GB (nM)	P55196-001
16 GB (nM)	N77399-001
8 GB (nM)	N77398-001
Memory (DDR5-6400)	
32 GB (nM)	P32320-001
16 GB (nM)	P32319-001

Use this information to correctly populate SODIMM sockets:

There are two SODIMM sockets on the system board, with one socket per channel. The sockets are labeled DIMM1 and DIMM3. The DIMM1 socket operates in memory channel B. The DIMM3 socket operates in memory channel A.

The computer comes with double data rate 5 synchronous dynamic random access memory (DDR5-SDRAM) small outline dual inline memory modules (SODIMMs).

The memory sockets are populated with at least one preinstalled SODIMM. To achieve the maximum memory support, you can populate the system board with up to 64 GB of memory.

DDR5-SDRAM SODIMMs requirements:

- Industry-standard 262 pin
- Unbuffered non-ECC DDR5-5600 MHz-compliant or DDR5-6400 MHz-compliant
- 1.1 V DDR5-SDRAM SODIMMs

In addition, the computer supports:

- 512 Mbit, 1 Gbit, and 2 Gbit non-ECC memory technologies
- Single-sided and double-sided SODIMMS
- SODIMMs constructed with ×8 and ×16 devices; SODIMMs constructed with ×4 SDRAM are not supported

NOTE: The system will not operate properly if you install unsupported SODIMMs.

IMPORTANT: You must disconnect the power cord and wait approximately 30 seconds for the power to drain before adding or removing memory modules. Regardless of the power state, voltage is always supplied to the memory modules as long as the computer is plugged into an active AC outlet. Adding or

removing memory modules while voltage is present can cause irreparable damage to the memory modules or system board.

IMPORTANT: When handling a memory module, be careful not to touch any of the contacts. Doing so can damage the module.

The memory module sockets have gold-plated metal contacts. When upgrading the memory, use memory modules with gold-plated metal contacts to prevent corrosion, oxidation, or both, resulting from having incompatible metals in contact with each other.

Static electricity can damage the electronic components of the computer or optional cards. Before beginning these procedures, be sure that you are discharged of static electricity by briefly touching a grounded metal object.

Table 5-9 **Memory module socket locations**

Item	Description	System Board Label	Socket Color
1	SODIMM1 socket, channel A	DIMM1	Black
2	SODIMM3 socket, channel B	DIMM3	Black

The system automatically operates in single-channel mode, dual-channel mode, or flex mode, depending on how the SODIMMs are installed.

- The system operates in single-channel mode if the SODIMM sockets are populated in one channel only.
- The system operates in a higher-performing dual-channel mode if the memory capacity of the SODIMM in channel A is equal to the memory capacity of the SODIMM in channel B.
- In any mode, the maximum operational speed is determined by the slowest SODIMM in the system.

Before replacing the memory modules, follow these steps:

1. Prepare the computer for disassembly (see Preparation for disassembly on page 28).
2. Remove the access panel (see Access panel on page 29).

Replace a memory module:

1. Rotate the fan up off the memory modules.

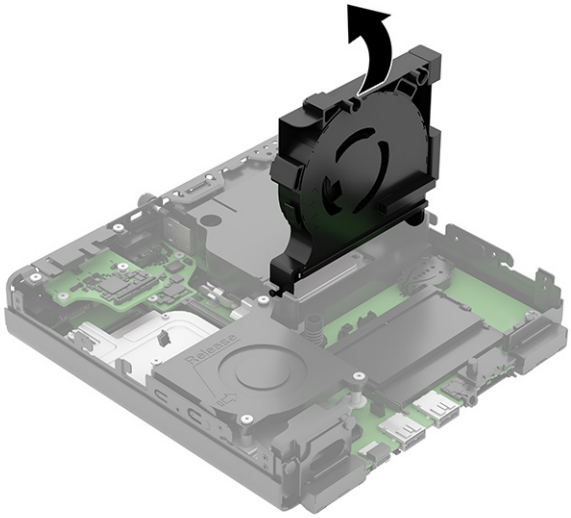

2. Lift the cover to access the memory modules.
3. Press outward on the two latches **(1)** on each side of the memory module, and then pull the module **(2)** out of the socket.

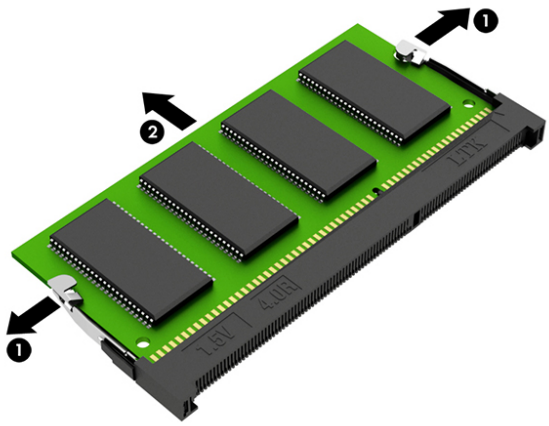

4. To install a memory module, match the notch on the module with the tab on the memory socket. Slide the new module **(1)** into the socket at approximately a 30° angle, and then press the module **(2)** down so that the latches lock it in place.

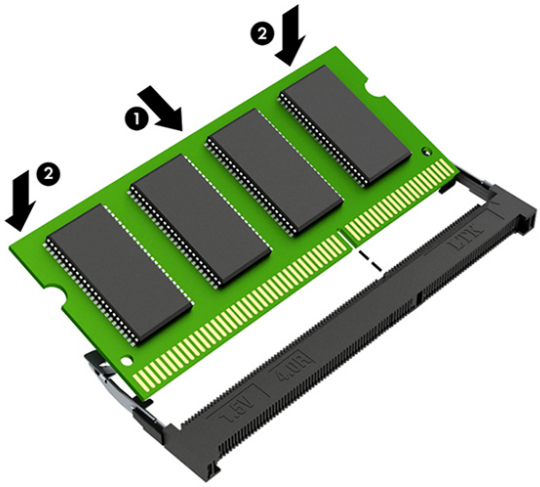

NOTE: A memory module can be installed in only one way.

The computer automatically recognizes the additional memory when you turn on the computer.

Battery

Use these procedures to remove the battery. The battery that comes with the computer provides power to the real-time clock. When replacing the battery, use a battery equivalent to the battery originally installed in the computer. The computer comes with a 3 V lithium coin cell battery.

WARNING! The computer contains an internal lithium manganese dioxide battery. There is a risk of fire and burns if the battery is not handled properly. To reduce the risk of personal injury:

- Do *not* attempt to recharge the battery.
- Do *not* expose to temperatures higher than 60°C (149°F).
- Do *not* disassemble, crush, puncture, short external contacts, or dispose of in fire or water.
- Replace the battery only with the HP spare part that is designated for this product.

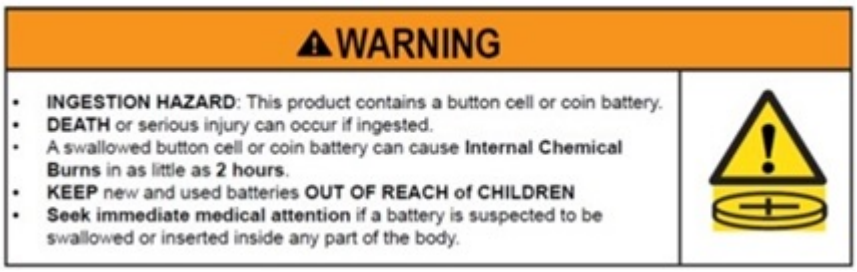

IMPORTANT: Before replacing the battery, back up the computer CMOS settings. When the battery is removed or replaced, the CMOS settings are cleared.

Static electricity can damage the electronic components of the computer or optional equipment. Before beginning these procedures, be sure that you are discharged of static electricity by briefly touching a grounded metal object.

NOTE: You can extend the lifetime of the lithium battery by plugging the computer into an AC outlet. The lithium battery is used only when the computer is not connected to AC power.

HP encourages customers to recycle used electronic hardware, HP original print cartridges, and rechargeable batteries. For more information about recycling programs, go to http://www.hp.com/recycle.

Before removing the battery, follow these steps:

1. Prepare the computer for disassembly (see Preparation for disassembly on page 28).
2. Remove the access panel (see Access panel on page 29).

Remove the battery:

1. Rotate the fan up off the battery.

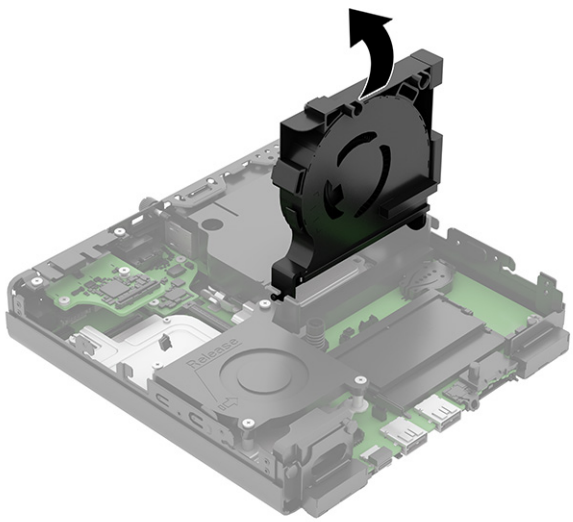

2. Squeeze the latch **(1)**, and then lift the cover **(2)** to open it.

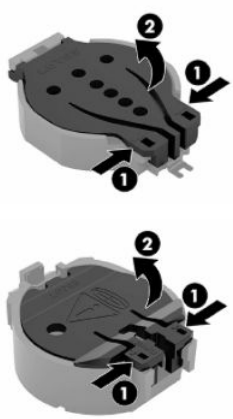

3. To release the battery from its holder, squeeze the metal clamp **(1)** that extends above one edge of the battery. When the battery **(2)** pops up, lift it out.

4. To replace the battery, with the positive side up, insert the battery **(1)** onto the battery socket at an angle, and then press the battery **(2)** down until it locks into place. The battery holder automatically secures the battery in the proper position.

5. Rotate the cover **(1)** onto the battery socket, and then press the cover **(2)** down until it locks into place.

Flex I/O connector board

Use these procedures to remove the flex I/O connector board.

Table 5-10 **Flex I/O connector board descriptions and part numbers**

Description	Spare part number
Dual Type-A 3.2 Gen 1 Flex IO v2	P39360-001
HP Serial Port Flex IO v3	P37040-001
HP Dual Mini DisplayPort Video Port Extender	P39602-001
1 GbE USB NIC	M27481-002

Before removing the flex I/O connector board, follow these steps:

1. Prepare the computer for disassembly (see Preparation for disassembly on page 28).
2. Remove the access panel (see Access panel on page 29).

Remove the flex I/O connector board:

1. Disconnect the cable from the system board (connector location might vary).
2. Remove the Phillips screws **(1)** from the metal frame and the I/O board.
3. Remove the board **(2)** from the computer.

NOTE: Screw and connector locations can vary depending on the type of flex I/O connector board that is installed.

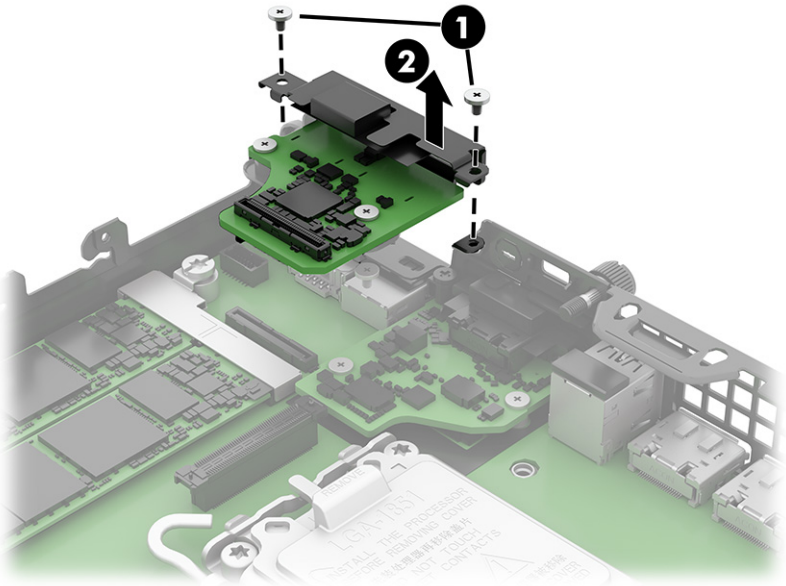

Reverse the removal procedure to install the flex I/O connector board.

6 Removal and replacement procedures for authorized service provider parts

This chapter provides removal and replacement procedures for authorized service provider parts.

IMPORTANT: Only an authorized service provider should access the components described in this chapter. Accessing these parts can damage the computer or void the warranty.

NOTE: Details about your computer, including model, serial number, product key, and length of warranty, are on the service tag.

NOTE: The HP Support YouTube Channel (in English) has videos that provide step-by-step removal and replacement instructions for many common parts and models.

IMPORTANT: Adherence to these procedures and precautions is essential for proper service. After completing all necessary removal and replacement procedures, run the Diagnostics utility to verify that all components operate properly.

NOTE: Not all features listed in this guide are available on all computers.

Component replacement procedures

Use the procedures described in this section to remove and replace computer components.

NOTE: HP continually improves and changes product parts. For complete and current information about supported parts for your computer, go to https://partsurfer.hp.com/, select your country or region, and then follow the on-screen instructions.

Make special note of each screw size and location during removal and replacement.

Heat sink

Use these procedures to remove the heat sink.

Table 6-1 **Heat sink descriptions and part numbers**

Description	Spare part number
For use in models with discrete graphics	Q00280-001
For use in 65 W models	Q00279-001
For use in 40 W models	Q00278-001

IMPORTANT: The bond between the heat sink and the processor can be very tight.

If the computer will turn on, before removing the heat sink, turn on the computer until it warms the heat sink. Warming the heat sink loosens the bond between the heat sink and the processor, thereby making it easier to separate them.

Be sure not to pull the processor out of the socket when you lift the heat sink, especially if you cannot warm the heat sink before removal. Inadvertently removing the processor can damage the pins.

Before removing the heat sink, follow these steps:

1. Prepare the computer for disassembly (see Preparation for disassembly on page 28).
2. Remove the access panel (see Access panel on page 29).

Remove the heat sink:

1. In the order indicated on the heat sink, loosen the three captive Torx screws **(1)**, and then lift the heat sink **(2)** out of the computer.

   IMPORTANT: Be sure to loosen the screws in the order indicated by the numbers stamped on the heat sink.

   IMPORTANT: For optimum thermal performance, be sure not to touch the thermal grease on the surface of the processor or the heat sink.

   Use the illustration that matches your computer.

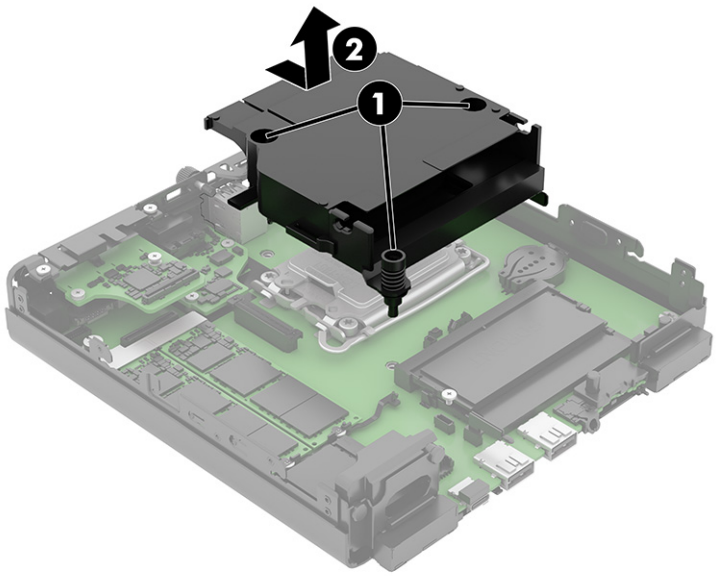

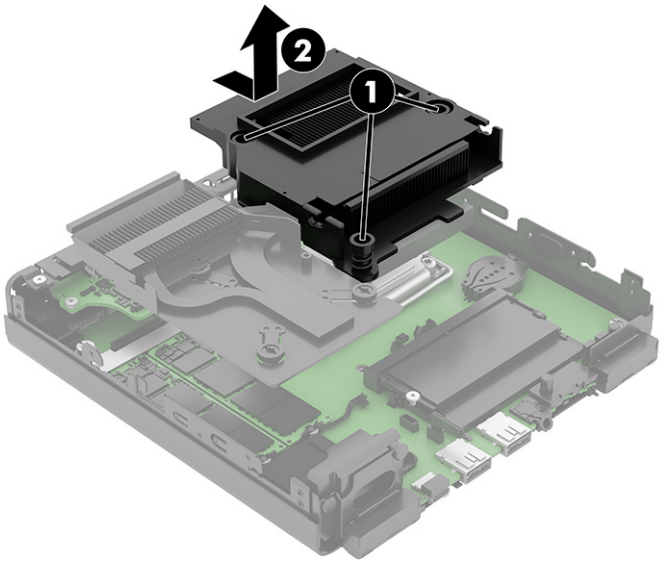

2. Thoroughly clean the thermal grease **(1)** from the surfaces of the heat sink and the system board components each time the heat sink is removed. Thermal grease is used on the processor area of the heat sink. Make sure the thermal pads **(2)** are undamaged.

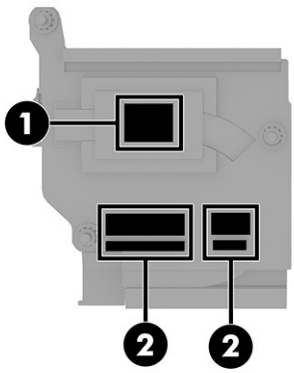

IMPORTANT: Tighten heat sink retaining screws in diagonally opposite pairs (as in an X) to evenly seat the heat sink on the processor to avoid damage that could require replacing the system board.

Reverse the removal procedures to replace the heat sink.

Flex I/O connector board (board-to-board)

Use these procedures to remove the flex I/O connector board.

Table 6-2 **Flex I/O connector board descriptions and part numbers**

Description	Spare part number
HP DisplayPort 2.1 Flex IO v3	P27712-001
HP VGA Flex IO v3	P27714-001
HP HDMI 2.1 Flex IO v3	P27713-001

Table 6-2 Flex I/O connector board descriptions and part numbers (continued)

Description	Spare part number
HP Dual Type-A 3.2 Gen 1 2nd Flex IO v3	P37127-001
HP Serial Port 2nd Flex IO v3	N07478-001
HP Dual Type-C 3.2 Gen2 15W Out Flex IO v3	P27711-001
2.5 Gbe NIC	P07166-001
Thunderbolt 4	Q09568-001

Before removing the flex I/O connector board, follow these steps:

1. Prepare the computer for disassembly (see Preparation for disassembly on page 28).
2. Remove the access panel (see Access panel on page 29).

Remove the flex I/O connector board:

- Remove the two Phillips screws **(1)** that secure the board to the computer, and then lift the board **(2)** to disconnect it from the connector on the system board.

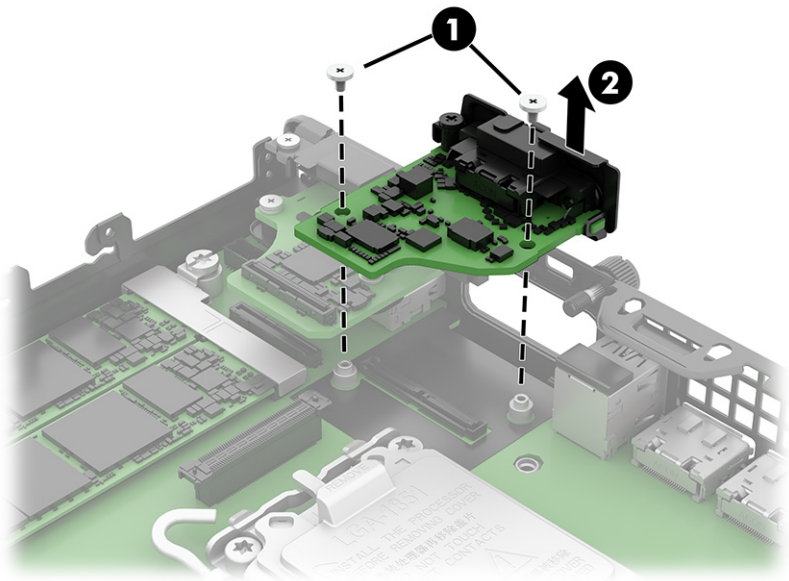

Reverse the removal procedure to install the flex I/O connector board.

System board

Use these procedures to remove the system board.

Table 6-3 System board descriptions and part numbers

Description	Spare part number
Intel Core Ultra 9 386H processor for use in models with a standard BIOS	Q00282-601
Intel Core Ultra 9 386H processor for use in models with a NetClone BIOS	Q00295-601

Table 6-3 System board descriptions and part numbers (continued)

Description	Spare part number
Intel Core Ultra 7 366H processor for use in models with a standard BIOS	Q00290-601
Intel Core Ultra 7 366H processor for use in models with a NetClone BIOS	Q00303-601
Intel Core Ultra 7 356H processor for use in models with a standard BIOS (PTLM)	Q00293-601
Intel Core Ultra 7 356H processor for use in models with a NetClone BIOS (PTLM)	Q00306-601
Intel Core Ultra 7 356H processor for use in models with a standard BIOS (PTLPG)	Q00289-601
Intel Core Ultra 7 356H processor for use in models with a NetClone BIOS (PTLPG)	Q00302-601
Intel Core Ultra 5 336H processor for use in models with a standard BIOS (PTLM)	Q00286-601
Intel Core Ultra 5 336H processor for use in models with a NetClone BIOS (PTLM)	Q00299-601
Intel Core Ultra 5 336H processor for use in models with a standard BIOS (PTLPG)	Q00283-601
Intel Core Ultra 5 336H processor for use in models with a NetClone BIOS (PTLPG)	Q00296-601
Intel Core Ultra 5 335 processor for use in models with a standard BIOS	Q00285-601
Intel Core Ultra 5 335 processor for use in models with a NetClone BIOS	Q00298-601
Intel Core Ultra 5 325 processor for use in models with a standard BIOS	Q00284-601
Intel Core Ultra 5 325 processor for use in models with a NetClone BIOS	Q00297-601
Intel Core Ultra 5 322 processor for use in models with a standard BIOS	Q00291-601
Intel Core Ultra 5 322 processor for use in models with a NetClone BIOS	Q00304-601

NOTE: System board appearance can vary.

Before removing the system board, follow these steps:

1. Prepare the computer for disassembly (see Preparation for disassembly on page 28).
2. Remove the access panel (see Access panel on page 29).
3. Remove the speaker (see Speaker on page 31).
4. Remove the fan (see Fan on page 32).
5. Remove the second fan (see Second fan on page 33).
6. Remove the WLAN module (see WLAN module on page 36).
7. If applicable, remove the flex I/O connector board (board-to-board) (see Flex I/O connector board (board-to-board) on page 48).
8. Remove the heat sink (see Heat sink on page 46).

Remove the system board:

1. Disconnect all cables from the system board, and note their location for reinstallation.
2. Remove the Torx screw **(1)** that secures the system board to the computer.

3. Lift the front of the system board **(2)**, and then pull it **(3)** away from the rear connectors to remove it from the computer.

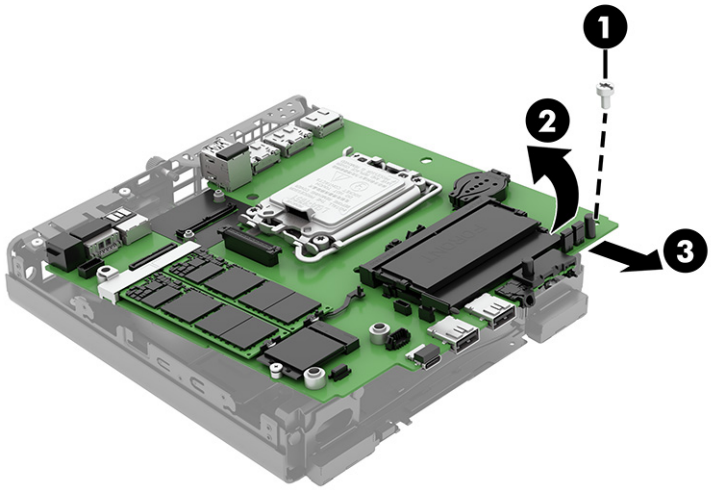

Reverse the removal procedures to replace the system board.

NOTE: When replacing the system board, you must change the chassis serial number in the BIOS.

When replacing the system board, you must reprogram the SMBIOS information about the affected computer. Failure to reprogram the board will result in eventual failure, such as an activation failure (need to reactivate the system) or a system recovery failure.

Update SMBIOS information in Computer Setup.

Wireless antennas (select models only)

Use this procedure to remove the wireless antennas.

Table 6-4 **Antenna description and part number**

Description	Spare part number
Antennas	P34935-001

Before removing the antennas, follow these steps:

1. Prepare the computer for disassembly (see Preparation for disassembly on page 28).
2. Remove the access panel (see Access panel on page 29).
3. Remove the front bezel (see Front bezel and dust filter on page 29).
4. Remove the system board (see System board on page 49).

Remove the antennas:

1. Use a tool **(1)** to release both antennas from the front of the computer. The antennas are secured with adhesive.
2. Remove the antenna cables from the clips **(2)** on the computer chassis floor.

3. Pull the antennas and cables **(3)** out of the front of the computer.

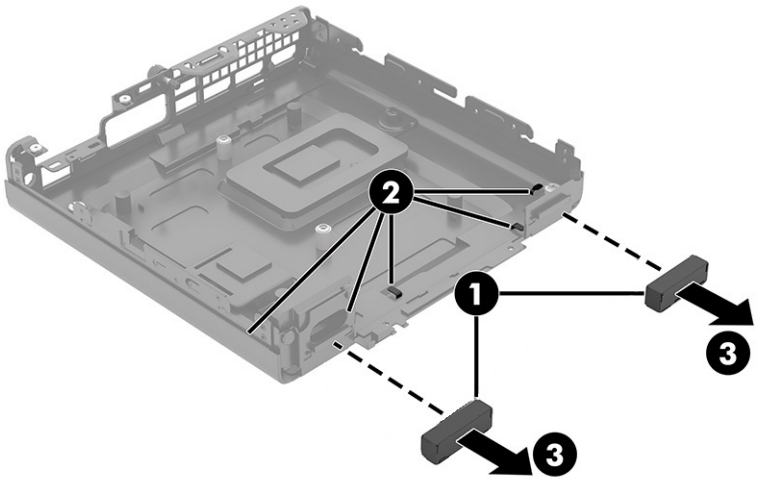

Reverse the removal procedure to install the antennas.

7 Troubleshooting without diagnostics

Use this chapter to identify and correct minor problems.

⚠ **CAUTION:** Misuse of the computer or failure to establish a safe and comfortable work environment can result in discomfort or serious injury. For more information, see the *Safety & Regulatory Information* guide.

Before you call for technical support

If you are having problems with the computer, try these solutions to isolate the exact problem before calling for technical support.

- Run the HP diagnostic tool.
- Run the hard drive self-test in Computer Setup.
- Check the power light on the front of the computer to see if it is blinking red. The blinking lights are error codes that will help you diagnose the problem.
- If you are working on a network, plug another computer with a different cable into the network connection. There might be a problem with the network plug or cable.
- If you recently added new hardware, remove the hardware and see if the computer functions properly.
- If you recently installed new software, uninstall the software and see if the computer functions properly.
- Boot the computer to Safe Mode to see if it will boot without all of the drivers loaded. When booting the operating system, use "Last Known Configuration."
- See the comprehensive online technical support at http://www.hp.com/support.

Access HP Business Solutions at https://www.hp.com/us-en/solutions/business-solutions.html for the latest online support information, software and drivers, proactive notification, and worldwide community of peers and HP experts.

If it becomes necessary to call for technical assistance, be prepared to do the following tasks to ensure that your service call is handled properly:

- Be in front of your computer when you call.
- Before you call, write down the computer serial number and product ID number.
- Spend time troubleshooting the problem with the service technician.

- Restore the system from the Recovery Disc Set that you created or restore the system to its original factory condition in System Software Requirement Disks (SSRD).

IMPORTANT: Restoring the system will erase all data on the hard drive. Be sure to back up all data files before running the restore process.

NOTE: For sales information and warranty upgrades (Care Packs), call your local authorized service provider or dealer.

Helpful hints

If you encounter problems with the computer or software, see this list of general suggestions before taking further action.

- Check that the computer is plugged into a working electrical outlet.
- Check that the computer is turned on and the white power light is on.
- Check the power light on the front of the computer to see if it is blinking red. The blinking lights are error codes that help you diagnose the problem.
- Press and hold any key if the system beeps. Then the keyboard should be operating correctly.
- Check all cable connections for loose connections or incorrect connections.
- Wake the computer by pressing any key on the keyboard or pressing the power button. If the system remains in suspend mode, shut down the computer by pressing and holding the power button for at least 10 seconds, and then press the power button again to restart the computer. If the system does not shut down, unplug the power cord, wait a few seconds, and then plug it in again. The computer will restart if it is set to turn on automatically as soon as power is restored in Computer Setup.
- Be sure that all the needed device drivers have been installed. For example, if you are using a printer, you need a driver for that model printer.
- Remove all bootable media (such as a USB device) from the system before turning it on.
- If you have installed an operating system other than the factory-installed operating system, check to be sure that it is supported on the system.

NOTICE: When the computer is plugged into an AC power source, voltage is always being applied to the system board. You must disconnect the power cord from the power source before opening the computer to prevent system board or component damage.

Solving general problems

You might be able to easily resolve the general problems described in this section. If a problem persists and you cannot resolve it yourself or if you feel uncomfortable about performing the operation, contact an authorized dealer or reseller.

CAUTION: When the computer is plugged into an AC power source, voltage is always being applied to the system board. To reduce the risk of personal injury from electrical shock, hot surfaces, or both, be sure to disconnect the power cord from the AC outlet and allow the internal system components to cool before touching.

Cannot access the Computer Setup (F10) Utility when booting the computer

Use this information to troubleshoot the computer.

Cause	Solution
The Computer Setup (F10) Utility is set to Fast Boot, causing the F10 access screen to display too briefly when booting the computer.	Complete one of these tasks: - Before turning on the computer, press and hold f10. Turn on the computer and continue to hold F10 until the Computer Setup (F10) Utility is displayed. - Follow the Windows instructions for rebooting the computer into the Computer Setup (F10) Utility.

Computer appears locked up and will not turn off when the power button is pressed

Use this information to troubleshoot the computer.

Cause	Solution
Software control of the power switch is not functional.	1. Press and hold the power button for at least 10 seconds until the computer turns off. 2. Disconnect the power cord from the electrical outlet.

Computer will not respond to keyboard or mouse

Use this information to troubleshoot the computer.

Cause	Solution
Computer is in sleep state.	To resume from sleep state, press the power button. IMPORTANT: When attempting to resume from sleep state, do not hold down the power button for more than 10 seconds. Otherwise, the computer shuts down and you lose any unsaved data.
System has locked up.	Restart computer.
USB cables might not be seated properly.	Disconnect, and then reconnect USB cables to keyboard and mouse.

Computer date and time display is incorrect

Use this information to troubleshoot the computer.

Cause	Solution
RTC battery might need to be replaced.	Reset the date and time under **Control Panel**. You can also use Computer Setup to update the RTC date and time. If the problem persists, replace the RTC battery. To access Control Panel in Windows, type `control panel` in the taskbar search box, and then select Control Panel.

There is no sound or sound volume is too low

Use this information to troubleshoot the computer.

Cause	Solution
System volume might be set low or muted.	1. Check the front panel to see if an amber light indicates the system has been muted. Tap the touch-sensitive button to toggle the mute on and off. 2. Check the Computer Setup settings to be sure that the internal system speaker is not muted. This setting does not affect the external speakers. 3. Be sure that the external speakers are properly connected and powered on and that speaker volume control is set correctly. 4. Use the system volume control available in the operating system to be sure that the speakers are not muted or to increase the volume.

Cannot remove computer cover or access panel

Use this information to troubleshoot the computer.

Cause	Solution
Smart Cover Lock, featured on some computers, is locked.	Unlock the Smart Cover Lock using Computer Setup. In case of forgotten password, power loss, or computer malfunction, you must manually disable the Smart Cover lock. A key to unlock the Smart Cover Lock is not available from HP. Keys are typically available from a hardware store.

Poor performance

Use this information to troubleshoot the computer.

Cause	Solution
Processor is too hot.	1. Be sure that airflow to the computer is not blocked. Leave a 10.2 cm (4 inch) clearance on all vented sides of the computer to permit the required airflow. 2. Be sure that fans are connected and working properly (some fans only operate when needed). 3. Be sure that the processor heat sink is installed properly.
Hard drive is full.	Transfer data from the hard drive to create more space on the hard drive.
Low on memory.	Add more memory.
Hard drive fragmented.	Defragment hard drive.
Program previously accessed did not release reserved memory back to the system.	Restart the computer.
Virus resident on the hard drive.	Run virus protection program.
Too many applications running.	1. Close unnecessary applications to free memory. 2. Add more memory. 3. Some applications run in the background and can be closed by right-clicking their corresponding icons in the task tray.

Some software applications, especially games, are stressful on the graphics subsystem.	1. Lower the display resolution for the current application or consult the documentation that came with the application for suggestions on how to improve performance by adjusting parameters in the application. 2. Add more memory. 3. Upgrade the graphics subsystem.
Cause unknown.	Restart the computer.

System does not turn on and the lights on the front of the computer are not blinking

Use this information to troubleshoot the computer.

Cause	Solution
System unable to power on.	Press and hold the power button for fewer than 10 seconds. If the hard drive light turns white: 1. If the computer has a voltage selector, check that the voltage selector located on the rear of the power supply is set to the appropriate voltage. The proper voltage setting depends on your region. 2. Remove the expansion cards one at a time until the 5V_aux light on the system board turns on. 3. Replace the system board. OR Press and hold the power button for fewer than 10 seconds. If the hard drive light does not turn white: 1. Check whether the unit is plugged into a working AC outlet. 2. Open the access panel and check that the power button cable is properly connected to the system board. 3. Check that the power supply cables are properly connected to the system board. 4. Check to see if the 5V_aux light on the system board is turned on. If it is turned on, replace the power button assembly. 5. If the 5V_aux light on the system board is off, replace the power supply. 6. Replace the system board.

Solving power problems

This table provides common causes and solutions for power problems.

Power supply shuts down intermittently

Use this information to troubleshoot the computer.

Cause	Solution
If the computer has a voltage selector, the voltage selector switch on the rear of the computer chassis (select products only) is not switched to the correct line voltage (115 V or 230 V).	Select the proper AC voltage using the selector switch.
Power supply will not turn on because of internal power supply fault.	Replace the power supply.

Solving audio problems

If the computer has audio features and you encounter audio problems, see the common causes and solutions listed in these tables.

Sound cuts in and out

Use this information to troubleshoot the computer.

Cause	Solution
Processor resources are being used by other open applications.	Shut down all open processor-intensive applications.

Sound does not come out of the speaker or headphones

Use this information to troubleshoot the computer.

Cause	Solution
Software volume control is turned down or muted.	Double-click the **Speaker** icon on the taskbar, be sure that **Mute** is not selected, and use the volume slider to adjust the volume. You can perform this action with the touch-sensitive buttons on the front of the computer.
Audio is hidden in Computer Setup.	Enable the audio in Computer Setup: **Advanced** > **Built-in Device Options**.
The external speakers are not turned on.	Turn on the external speakers.
Headphones or devices connected to the line-out connector mute the internal speaker.	Turn on and use headphones or external speakers, if connected, or disconnect headphones or external speakers.
Computer is in the sleep state.	Press the power button to resume from the sleep state. IMPORTANT: When attempting to resume from the sleep state, do not hold down the power button for more than 4 seconds. Otherwise, the computer will shut down, and you will lose any unsaved data.
Internal speaker is disabled in Computer Setup.	Enable the internal speaker in Computer Setup. Select **Advanced** > **Built-in Device Options**.
Some applications can select which audio output device is used.	Be sure that the application has selected the correct audio device.
The operating system controls might be set to use a different audio device as the default output device than what is expected.	Set the operating system to use the correct audio device.

Computer appears to be locked up while recording audio

Use this information to troubleshoot the computer.

Cause	Solution
The hard disk might be full.	Before recording, be sure that there is enough free space on the hard disk. You can also try recording the audio file in a compressed format.

Line-in jack is not functioning properly

Use this information to troubleshoot the computer.

Cause	Solution
Jack has been reconfigured in the audio driver or application software.	In the audio driver or application software, reconfigure the jack or set the jack to its default value.

Solving printer problems

If you encounter printer problems, see the documentation that came with the printer and the common causes and solutions listed in these tables.

Printer will not print

Use this information to troubleshoot the computer.

Cause	Solution
Printer is not turned on and online.	Turn the printer on and be sure that it is online.
The correct printer driver for the application is not installed.	1. Install the correct printer driver for the application. 2. Try printing using the MS-DOS command: `DIR C:\ > [printer port]` where `[printer port]` is the address of the printer being used. If the printer works, reload the printer driver. To run MS-DOS commands, press the Windows key + r, type `cmd` in the **Open** box, and then select **OK**.
If you are on a network, you might not have made the connection to the printer.	Make the proper network connections to the printer.
Printer might have failed.	Run printer self-test.
The printer might be out of paper.	Check the paper tray, and refill it if it is empty.

Printer will not turn on

Use this information to troubleshoot the computer.

Cause	Solution
The cables might not be connected properly.	Reconnect all cables, and check the power cord and electrical outlet.

Printer prints garbled information

Use this information to troubleshoot the computer.

Cause	Solution
The correct printer driver for the application is not installed.	Install the correct printer driver for the application.
The cables might not be connected properly.	Reconnect all cables.
Printer memory might be overloaded.	Reset the printer by turning it off for 1 min, and then turn it back on.

Solving keyboard and mouse problems

If you encounter keyboard or mouse problems, see the documentation that came with the equipment and the common causes and solutions listed in these tables.

Keyboard commands and typing are not recognized by the computer

Use this information to troubleshoot the computer.

Cause	Solution
Keyboard connector is not properly connected.	Shut down the computer, reconnect the keyboard, and then restart the computer.
Program in use has stopped responding to commands.	Shut down your computer using the mouse, and then restart the computer.
Keyboard needs repairs.	See the Worldwide Limited Warranty for terms and conditions.
Computer is in the sleep state.	Press the power button to resume from the sleep state. IMPORTANT: When attempting to resume from the sleep state, do not hold down the power button for more than 4 seconds. Otherwise, the computer will shut down, and you will lose any unsaved data.

Mouse does not respond to movement or is too slow

Use this information to troubleshoot the computer.

Cause	Solution
Mouse needs to be cleaned	Clean the mouse. For more information, see Cleaning the mouse on page 25.
Mouse connector is not properly plugged into the back of the computer.	Shut down the computer using the keyboard. 1. Press the ctrl and esc keys at the same time, or press the Windows logo key, to display the **Start** menu. 2. Use the arrow keys to scroll to and select the power icon at the top right on the menu, and then press enter. 3. Use the arrow keys to select **Shut Down**, and then press enter. 4. After the shutdown is complete, plug the mouse connector into the back of the computer (or the keyboard) and restart.
Program in use has stopped responding to commands.	Shut down the computer using the keyboard, and then restart the computer.
Mouse might need repair.	See the Worldwide Limited Warranty for terms and conditions.

Computer is in the sleep state.	Press the power button to resume from the sleep state. **IMPORTANT:** When attempting to resume from the sleep state, do not hold down the power button for more than 10 seconds. Otherwise, the computer will shut down, and you will lose any unsaved data.
If using a wireless mouse, you might need to resynchronize the mouse with the computer.	Follow the instructions that came with the mouse.

Solving hardware installation problems

You might need to reconfigure the computer when you add or remove hardware, such as an additional drive or expansion card.

If you install a plug and play device, Windows automatically recognizes the device and configures the computer. If you install a device that is not plug and play, you must reconfigure the computer after completing installation of the new hardware. In Windows, use the **Add Hardware Wizard**, and follow the instructions that appear on the screen.

To open the Add Hardware Wizard, open a command prompt and type **hdwwid.exe**.

⚠ **WARNING!** When the computer is plugged into an AC power source, voltage is always applied to the system board. To reduce the risk of personal injury from electrical shock, hot surfaces, or both, be sure to disconnect the power cord from the AC outlet and allow the internal system components to cool before touching.

A new device is not recognized as part of the system

Use this information to troubleshoot the computer.

Cause	Solution
Cables of new external device are loose or power cables are unplugged.	Be sure that all cables are properly and securely connected and that pins in the cable or connector are not bent down.
Power switch of new external device is not turned on.	Turn off the computer, turn on the external device, and then turn on the computer to integrate the device with the computer system.
When the system advised you of changes to the configuration, you did not accept them.	Reboot the computer and follow the instructions for accepting the changes.
A plug and play board might not automatically configure when added if the default configuration conflicts with other devices.	Use Windows Device Manager to clear the automatic settings for the board, and choose a basic configuration that does not cause a resource conflict. You can also use Computer Setup to reconfigure or disable devices to resolve the resource conflict. To access Device Manager in Windows, type `device manager` in the taskbar search box, and then select **Device Manager** from the list of applications.
USB ports on the computer are disabled in Computer Setup.	Run the Computer Setup utility and ensure that **Device available** is selected for appropriate USB ports under **Advanced** > **Port Options**.

Computer will not start

Use this information to troubleshoot the computer.

Cause	Solution
Incorrect memory modules were used in the upgrade, or memory modules were installed in the wrong location.	1. Review the documentation that came with the system to determine if you are using the correct memory modules and to verify the proper installation. NOTE: DIMM1 or XMM1 must always be installed. DIMM1 must be installed before DIMM3. 2. Observe the beeps and lights on the front of the computer. Beeps and blinking lights are codes for specific problems. 3. If you still cannot resolve the issue, contact Customer Support.

Solving network problems

Some common causes and solutions for network problems are listed in these tables. The guidelines do not discuss the process of debugging the network cabling.

Network driver does not detect network controller

Use this information to troubleshoot the computer.

Cause	Solution
Network controller is disabled.	1. Run Computer Setup and enable network controller. 2. Enable the network controller in the operating system using Device Manager. To access Device Manager in Windows, type `device manager` in the taskbar search box, and then select **Device Manager** from the list of applications.
Incorrect network driver.	Check the network controller documentation for the correct driver or obtain the latest driver from the manufacturer's website.

Network status link light never blinks

Use this information to troubleshoot the computer.

NOTE: The network status light is supposed to blink when there is network activity.

Cause	Solution
No active network is detected.	Check cabling and network equipment for proper connection.
Network controller is not set up properly.	Check for the device status within Windows, such as Device Manager for driver load and the Network Connections applet within Windows for link status. To access Device Manager in Windows, type `device manager` in the taskbar search box, and then select **Device Manager** from the list of applications.

Network controller is disabled.	1. Run Computer Setup and enable network controller. 2. Enable the network controller in the operating system using Device Manager. To access Device Manager in Windows, type `device manager` in the taskbar search box, and then select **Device Manager** from the list of applications.
Network driver is not properly loaded.	Reinstall network drivers.
System cannot autosense the network.	Disable autosensing capabilities, and force the system into the correct operating mode.

Diagnostics reports a failure

Use this information to troubleshoot the computer.

Cause	Solution
The cable is not securely connected.	Be sure that the cable is securely attached to the network connector and that the other end of the cable is securely attached to the correct device.
The cable is attached to the incorrect connector.	Be sure that the cable is attached to the correct connector.
There is a problem with the cable or a device at the other end of the cable.	Be sure that the cable and device at the other end are operating correctly.
The network controller is defective.	Contact an authorized service provider.

Diagnostics passes, but the computer does not communicate with the network

Use this information to troubleshoot the computer.

Cause	Solution
Network drivers are not loaded, or driver parameters do not match current configuration.	Be sure that the network drivers are loaded and that the driver parameters match the configuration of the network controller. Be sure that the correct network client and protocol are installed.
The network controller is not configured for this computer.	Select the **Network and Sharing Center** icon in the **Control Panel**, and configure the network controller. To access Control Panel in Windows, type `control panel` in the taskbar search box, and then select **Control Panel** from the list of applications.

Network controller stopped working when an expansion board was added to the computer

Use this information to troubleshoot the computer.

Cause	Solution
The network controller requires drivers.	Verify that the drivers were not accidentally deleted when the drivers for a new expansion board were installed.

Network controller stops working without apparent cause

Use this information to troubleshoot the computer.

Cause	Solution
The cable is not securely connected.	Be sure that the cable is securely attached to the network connector, and that the other end of the cable is securely attached to the correct device.
The network controller is defective.	Contact an authorized service provider.

Cannot connect to network server when attempting remote system installation

Use this information to troubleshoot the computer.

Cause	Solution
The network controller is not configured properly.	Verify that network connectivity exists, a DHCP Server is present, and the Remote System Installation Server contains the network interface card (NIC) drivers for your NIC.

System setup utility reports unprogrammed EEPROM

Use this information to troubleshoot the computer.

Cause	Solution
Unprogrammed EEPROM.	Contact an authorized service provider.

Solving memory problems

If you encounter memory problems, some common causes and solutions are listed in these tables.

IMPORTANT: Depending on the Management Engine (ME) settings, power can still be supplied to the DIMMs when the computer is turned off. To avoid damage to the DIMMs or the system board, you must unplug the computer power cord before attempting to reseat, install, or remove a memory module.

For those systems that support error correction code (ECC) memory, HP does not support mixing ECC and non-ECC memory. Otherwise, the computer will not boot the operating system.

NOTE: The memory count will be affected by configurations with the ME enabled. The ME uses 8 MB of system memory in single-channel mode or 16 MB of memory in dual-channel mode to download, decompress, and execute the ME firmware for Out-of-Band (OOB), third-party data storage, and other management functions.

System will not boot or does not function properly after installing additional memory modules

Use this information to troubleshoot the computer.

Cause	Solution
A memory module is not installed in the DIMM1 or XMM1 socket.	Verify that a memory module is installed in the DIMM1 or XMM1 socket on the system board. This socket must be populated with a memory module.
Memory module is not the correct type or speed grade for the system, or the new memory module is not seated properly.	Replace module with the correct industry-standard device for the computer. On some models, ECC and non-ECC memory modules cannot be mixed.

Out of memory error

Use this information to troubleshoot the computer.

Cause	Solution
You have run out of memory to run the application.	Check the application documentation to determine the memory requirements.

Memory count during POST is wrong

Use this information to troubleshoot the computer.

Cause	Solution
The memory modules might not be installed correctly.	Check that the memory modules have been installed correctly and that proper modules are used.
Integrated graphics might use system memory.	No action required.

Insufficient memory error during operation.

Use this information to troubleshoot the computer.

Cause	Solution
Too many Terminate and Stay Resident programs (TSRs) are installed.	Delete any TSRs that you do not need.
You have run out of memory for the application.	Check the memory requirements for the application or add more memory to the computer.

Solving USB flash drive problems

If you encounter USB flash drive problems, common causes and solutions are listed in these tables.

USB flash drive is not seen as a drive letter in Windows

Use this information to troubleshoot the computer.

Cause	Solution
The drive letter after the last physical drive is not available.	Change the default drive letter for the flash drive in Windows.

USB flash drive not found (identified)

Use this information to troubleshoot the computer.

Cause	Solution
The device is attached to a USB port that has been hidden in Computer Setup.	Run the Computer Setup utility and enable the USB ports in **Advanced** > **Port Options**.
The device was not properly seated before startup.	Be sure that the device is fully inserted into the USB port before applying power to the system

System will not boot from USB flash drive

Use this information to troubleshoot the computer.

Cause	Solution
Boot order is not correct.	Run the Computer Setup utility, and change the boot sequence in **Advanced** > **Boot Options**.
Removable Media Boot is disabled in the Computer Setup utility.	Run the Computer Setup utility, and enable booting to removable media in **Advanced** > **Boot Options**. Be sure that USB is enabled in **Storage** > **Boot Order**.

The computer boots to DOS after making a bootable flash drive

Use this information to troubleshoot the computer.

Cause	Solution
Flash drive is bootable.	Install the flash drive only after the operating system boots.
Flash drive is defective.	Try a different flash drive.

Solving internet access problems

If you encounter internet access problems, consult your internet service provider (ISP), or see the common causes and solutions listed in these tables.

Unable to connect to the internet

Use this information to troubleshoot the computer.

Cause	Solution
ISP account is not set up properly.	Verify internet settings, or contact your ISP for assistance.
Web browser is not set up properly.	Verify that the web browser is installed and set up to work with your ISP.
Cable/DSL modem is not plugged in.	Plug in the cable/DSL modem. You should see a power light on the front of the cable/DSL modem.
Cable/DSL service is not available or has been interrupted due to bad weather.	Try connecting to the internet at a later time or contact your ISP. If the cable/DSL service is connected, the cable light on the front of the cable/DSL modem will be on.
The CAT5 UTP cable is disconnected.	Connect the CAT5 UTP cable between the cable modem and the computer's RJ-45 connector. If the connection is good, the PC light on the front of the cable/DSL modem will be on.
IP address is not configured properly.	Contact your ISP for the correct IP address.
Cookies are corrupted. A *cookie* is a small piece of information that a web server can store temporarily with the web browser. Cookies are useful because they enable the browser to remember some specific information that the web server can later retrieve.	1. Type `control panel` in the taskbar search box, and then select **Control Panel** from the list of applications. 2. Select **Internet Options**. 3. In the **Browsing history** section, select the **Delete** button. 4. Select the **Cookies and website data** check box, and select the **Delete** button.

Cannot automatically launch internet programs

Use this information to troubleshoot the computer.

Cause	Solution
You must log on to your ISP before some programs will start.	Log on to your ISP and launch the program.

Solving software problems

Most software problems occur as a result of these situations:

- The application was not installed or configured correctly.
- Insufficient memory is available to run the application.
- A conflict exists between applications.
- All the necessary device drivers might not have been installed.
- If you have installed an operating system other than the factory-installed operating system, it might not be supported on the system.

If you encounter software problems, see the applicable solutions listed in the following table.

Computer will not start up and the HP logo does not appear

Use this information to troubleshoot the computer.

Cause	Solution
ROM issue - POST error has occurred.	Observe the beeps and lights on the front of the computer. See the Worldwide Limited Warranty for terms and conditions.

“Illegal Operation has Occurred” error message is displayed

Use this information to troubleshoot the computer.

Cause	Solution
Software being used is not Microsoft-certified for your version of Windows.	Verify that the software is certified by Microsoft for your version of Windows (see program packaging for this information).
Configuration files are corrupt.	If possible, save all data, close all programs, and restart the computer.

8 Computer Setup (F10) Utility

This information provides details of the functions of the Computer Setup Utility.

- Change settings from the defaults or restore the settings to default values.
- View the system configuration, including settings for processor, graphics, memory, audio, storage, communications, and input devices.
- Modify the boot order of bootable devices such as hard drives or USB flash media devices.
- Enter the Asset Tag or property identification number assigned by the company to this computer.
- Enable the power-on password prompt during system restarts (warm boots) as well as during startup.
- Establish an administrator password that controls access to the Computer Setup (F10) Utility and the settings described in this section.
- Establish minimum requirements for valid passwords, including length and required types of characters.
- Secure integrated I/O functionality, including the serial, USB, audio, or embedded NIC, so that they cannot be used until they are unsecured.
- Enable or disable different types of boot sources.
- Configure features such as Secure Boot, power management, virtualization support, and language and keyboard type used in Setup and POST.
- Replicate the system setup by saving system configuration information about a USB device and restoring it on one or more computers.
- Enable or disable DriveLock security or securely erase a hard drive.

Using Computer Setup (F10) Utilities

You can access Computer Setup only by turning on the computer or restarting the system.

To access the Computer Setup Utilities menu, complete these steps:

1. Turn on or restart the computer.
2. Repeatedly press f10 when the power button light turns white to access the utility.

   You can also press esc to see a menu that allows you to access different options available at startup, including the Computer Setup utility.

A choice of four headings appears in the Computer Setup Utilities menu: Main, Security, Advanced, and UEFI Drivers.

NOTE: If you do not press f10 at the appropriate time, you must restart the computer and again repeatedly press f10 when the power button light turns white to access the utility.

NOTE: Selecting UEFI Drivers restarts the computer into the third-party option ROM management application. You can access this application directly by pressing f3 during startup.

3. Use the left and right arrow keys to select the appropriate heading. Use the up and down arrow keys to select the option you want, and then press enter. To return to the Computer Setup Utilities menu, press esc.

4. To apply and save changes, select **Main** > **Save Changes and Exit**.

   - If you have made changes that you do not want applied, select **Ignore Changes and Exit**.
   - To restore settings from the Advanced and Main menus to original values, select **Apply Factory Defaults and Exit**.
   - To restore settings from the Advanced and Main menus to those previously saved by **Save Custom Defaults**, select **Apply Custom Defaults and Exit**. If no custom defaults have been saved, factory defaults are used.

NOTE: You cannot modify settings in the Security menu by selecting **Apply Defaults**. You reset those values by selecting **Restore Security Settings to Factory Defaults** at the bottom of the **Security** menu.

NOTE: Not all settings shown in the following sections are available for all models.

IMPORTANT: Do not turn computer power off while the BIOS is saving the Computer Setup (F10) changes because the settings could become corrupted. It is safe to turn off the computer only after exiting the F10 Setup screen.

Computer Setup Main

This table provides information about the Computer Setup Main menu.

NOTE: Support for specific Computer Setup options can vary, depending on the hardware configuration.

Table 8-1 Computer Setup Main

Option	Description
System Information	Lists all information in following list if **Advanced System Information** is selected. Lists smaller subset if **Basic System Information** is selected. • Product name • Installed memory size • Processor type • Processor cache size (L1/L2/L3) • Processor speed • MicroCode revision • Processor stepping • Memory speed • DIMM size (for each installed module) • System BIOS version • ME Firmware version (Intel only) • Video BIOS version • Reference code revision • Super I/O firmware version • USB Type-C controller firmware version • Born on date • Serial number • SKU number • UUID (Universally Unique Identifier) • Asset tracking number • Feature byte • Build ID • Product family • System board ID • System board CT number • Panel type • Panel serial number • Integrated MAC Address

Table 8-1 Computer Setup Main (continued)

Option	Description
System Diagnostics	If the hard drive has the HP Advanced Diagnostics installed, the application launches. If HP Advanced Diagnostics is not installed, a basic version that is built into the BIOS provides the capability to perform the following functions: • Memory Test • Hard Drive Check • Language
BIOS Event Log	**View BIOS Event Log** Displays a list of events, alerts, or warnings that have been logged since the log was last cleared. **Export to USB Key** Saves a file named BiosEventLog.txt containing the log entries to an inserted USB storage device. **Clear BIOS Event Log on Next Boot** When selected, the BIOS clears the event log when the user saves and exits. Default is disabled.

Table 8-1 Computer Setup Main (continued)

Option	Description
Update System BIOS	Lets you update the system BIOS from www.hp.com or another network server, from a removable USB drive, or from a file located on the hard drive. **Check [current selection] for BIOS Updates** The string that appears here depends on the setting in **BIOS Update Preferences**. **Lock BIOS Version** If this option is selected, the system is locked to the current BIOS version, and updates are not allowed. **Native OS Firmware Update Service** Allows the operating system to drive firmware updates (for example, Windows® Update). **BIOS Rollback Policy** • Unrestricted Rollback to older BIOS: Lets you roll back to any previous version of BIOS. • Restricted Rollback to older BIOS: If selected, **Minimum BIOS Version** becomes active, which lets you manually enter the minimum BIOS version that you can roll back to. **Minimum BIOS Version** Defaults to current version. Read-only unless restricted rollback is selected. **Allow BIOS Updates Using a Network** Lets you configure scheduled, automatic BIOS updates through the network. **BIOS Update Preferences** • Check for Update on Next Reboot: Default is disabled. • BIOS Source: Lets you select either HP.com or a custom URL. If **Custom URL** is selected, **Edit Custom URL** becomes active. HP recommends using a custom URL only for a managed IT environment. **Automatic BIOS Update Setting** Allows configuration of a periodic check for updates: NOTE: If Windows BitLocker Drive Encryption (BDE) is enabled, it must be temporarily suspended before the BIOS is flashed. • Do not update • Check for updates and prompt the user to accept or reject the update at that time • Check for updates and install all new versions • Check for updates and install only new versions marked important **BIOS Update Frequency** • Daily • Weekly • Monthly (default)

Table 8-1 Computer Setup Main (continued)

Option	Description
Update System BIOS	**Network Configuration Settings** Lets you configure the network connection to the server that is the host for system firmware updates. **Update BIOS Using Local Media** Lets you access files on either USB storage or the hard drive. The HP BIOS Update and Recovery application included in BIOS Softpaqs at www.hp.com copies the BIOS file to the correct location on the hard drive or USB device.
Change date and time	Lets you update system date and time.
System IDs	Let you set the following values: • Asset Tracking Number • Ownership Tag
Replicated Setup	**Back up current settings to USB device** Saves system configuration to a formatted USB flash media device. **Restore current settings from USB device** Restores system configuration from a USB flash media device.
Save Custom Defaults	Saves the current system configuration settings as the custom default set.
Apply Custom Defaults and Exit	Applies the custom default settings to the computer after rebooting. Does not apply to options in the **Security** menu.
Apply Factory Defaults and Exit	Restores the factory system configuration settings to the computer after rebooting. Does not apply to options in the **Security** menu.
Ignore Changes and Exit	Exits Computer Setup without applying or saving any changes.
Save Changes and Exit	Saves changes to current system configuration, exits Computer Setup, and reboots.

Computer Setup Security

This table provides information about the Computer Setup Security menu.

NOTE: Support for specific Computer Setup options can vary, depending on the hardware configuration.

Table 8-2 Computer Setup Security

Option	Description
Create BIOS Administrator Password	Lets you set and enable a BIOS administrator password, which controls access to the following features: • Setup Menu (F10) • Third-Party Option ROM Management (F3) • Update system ROM • WMI commands that change system settings • BIOS Configuration Utility (BCU) • Alternative power-on password NOTE: Creating a BIOS user disables the Fast Boot option.
Change BIOS Administrator Password (This selection is active only if a BIOS administrator password is set.)	Lets you change the BIOS administrator password. You must know the current password to be able to change it.
Create POST Power-On Password	Lets you change or delete power-on password. The power-on password prompt appears after a power cycle or reboot. If the user does not enter the correct power-on password, the unit will not boot.
Change POST Power-On Password (This selection is active only if a BIOS administrator password is set.)	Lets you change the POST power-on password. You must know the current password to be able to change it.
Password Policies	Let you set the guidelines for a valid password. Options include: • Using a password minimum length • Requiring at least one symbol • Requiring at least one number • Requiring at least one uppercase character • Requiring at least one lowercase character • Allowing spaces
Administrator Authentication Policies	Let you set limitations on some boot features restricting them to admin only, including: • Prompt for administrator authorization to access: – Boot menu in POST – System Recovery – Network boot – BIOS update • Allow the use of administrator credentials to modify the power-on password.

Table 8-2 Computer Setup Security (continued)

Option	Description
Security Configuration	**TPM Embedded Security** • **TPM Specification Version** Displays the current Trusted Platform Module (TPM) version. • **TPM Device** Lets you set the TPM as available or hidden. Default is available. • **TPM State** Select to enable the TPM. Default is disabled. • **Clear TPM** Select to reset the TPM to an unowned state. After the TPM is cleared, it is also turned off. To temporarily suspend TPM operations, turn the TPM off instead of clearing it. Default is on. IMPORTANT: Clearing the TPM resets it to factory defaults and turns it off. You will lose all created keys and data protected by those keys. • **TPM Activation Policy** – F1 to boot – Allow user to reject (default) – No prompts **BIOS Sure Start** • Verify Boot Block on every boot: Select to enable HP Sure Start. Default is disabled. • BIOS Data Recovery Policy: Select Automatic or Manual to determine data recovery process. Manual recovery is intended only for situations when you want forensic analysis before HP Sure Start recovery. When this policy is set to manual, HP Sure Start will not correct any issues that are found until the local user enters the manual recovery key sequence. This can result in a computer that cannot start until the manual recovery key sequence is entered. • Network Controller Configuration Restore: Select to restore the network controller parameters to the factory state saved in the HP Sure Start Private nonvolatile (flash) memory. This setting is available only on computers with built-in NIC. NOTE: This process can take up to 30 seconds. You need to restore this only when the Network Controller Configuration mismatch warning is set. • Dynamic Runtime Scanning of Boot Block: Verifies the integrity of the BIOS boot block region several times each hour while the computer is running. Default is enabled. • Sure Start BIOS Settings Protection: When enabled, HP Sure Start locks all critical BIOS settings and provides enhanced protection for these settings using nonvolatile (flash) memory. Default is off. NOTE: An administrator password must be set to activate this setting. • Sure Start Secure Boot Keys Protection: Saves a backup copy of Secure Boot Keys so that they can be recovered if someone attempts to alter them in an unauthorized manner. • Enhanced HP Firmware Runtime Intrusion Prevention and Detection: Enables monitoring of HP system firmware executing out of main memory while the operating system is running. Any anomalies detected in HP system firmware that are active while the operating system is running will result in a Sure Start security event being generated.

Table 8-2 **Computer Setup Security (continued)**

Option	Description
Security Configuration (*continued*)	• Sure Start Security Event Policy: Controls HP Sure Start behavior upon identifying a critical security event, such as any modification to HP firmware, while the operating system is running. – Log Event Only: HP Sure Start will log all critical security events in the HP Sure Start audio log within the HP Sure Start nonvolatile (flash) memory. – Log Event and Notify User: In addition to logging all critical security events, HP Sure Start will notify the user within the operating system that a critical event has occurred. – Log Event and Power Off System: In addition to logging all critical security events, HP Sure Start turns off the computer upon detecting an HP Sure Start Security Event. Because of the potential for data loss, HP recommends this setting only in situations where security integrity of the system is a higher priority than the risk of potential data loss. • Sure Start Security Event Boot Notification: Lets you enable a warning message on the startup screen if a Sure Start event, such as BIOS recovery or memory intrusion, occurs. **Secure Boot Configuration**. Lets you be sure that an operating system is legitimate before booting to it, making Windows resistant to malicious modification from preboot to full operating system booting, preventing firmware attacks. UEFI and Windows Secure Boot only allow code signed by preapproved digital certificates to run during the firmware and OS boot process. NOTE: An administrator password must be set to activate this setting. Secure Boot must also be enabled. • Secure Boot: Default is disabled. • Secure Boot Key Management: Lets you manage the custom key settings. NOTE: Access to these settings requires Sure Start Secure Boot Keys Protection to be disabled. – Import Custom Secure Boot Keys: Default is disabled. – Clear Secure Boot Keys: Lets you delete any previously loaded custom boot keys. Clearing keys will disable secure boot. Default is disabled. – Reset Secure Boot Keys to factory defaults: Default is disabled. – Enable MS UEFI CA Key: Disabling this setting alters the Secure Boot key list to further restrict the allowed software components. Set this option to disable to support Device Guard. Default is enabled. – Ready BIOS for Device Guard Use: Requires BIOS Administrator password to be configured and Secure Boot to be enabled.

Table 8-2 Computer Setup Security (continued)

Option	Description
Security Configuration (*continued*)	**Secure Platform Management (SPM)** • SPM Current State: Displays the current state. Also lets you change the state. • Unprovision SPM: Deprovisions SPM, which causes HP Sure Run to revert to the inactive state and return HP Sure Recover to default settings. • HP Sure Run Current State: Displays the current state. Also lets you change the state. • Smart Health Enable • EBAM Current State: Displays the current state. Also lets you change the state. Disable EBAM: Disables Enhanced BIOS Authentication Mode (EBAM). • Deactivate HP Sure Run: Deactivates HP Sure Run without deprovisioning SPM. Requires BIOS Administrator password to be configured. • Local Access Key: Indicates that the key is present. Also lets you clear the keys and reboot. Clear EBAM Local Access Keys and Reboot: Deletes all currently established local access keys created for Enhanced BIOS Authentication Mode (EBAM). **Physical Presence Interface**: When set to enabled, the user is notified at system power up when changes are made to system security policy. The user must manually agree to those changes before the change is confirmed. Default is enabled. **Smart Cover**: The Smart Cover Lock (select products only) is a software-controllable solenoid lock that restricts unauthorized access to the system's internal components. • Cover Lock: Default is unlock. • Cover Removal Sensor: Lets you disable the cover sensor or configure what action is taken if the computer cover is removed. Default is disabled. NOTE: **Notify user** alerts the user with a POST error on the first boot after the sensor detects removal of the cover. If the password is set, **Administrator Password** requires that the password be entered to boot the computer if the sensor detects that the cover has been removed. **Trusted Execution Technology (TXT)** Enables TXT on select Intel-based systems. Default is disabled. NOTE: Enabling this feature disables OS management of the TPM, prevents a reset of the TPM, and constrains the configuration of VTx, VTd, and TPM. **Intel Software Guard Extensions (SGX)** Intel SGX is a set of processor code instructions that allows user-level code to allocate private regions of memory. Unlike normal process memory, SGX protects these private memory regions from processes running at higher privilege levels. • Software control • Disable • Enable **Full encryption of main memory (DRAM)** (select products only) When selected, the computer stores all data to DRAM in an encrypted format.

Table 8-2 Computer Setup Security (continued)

Option	Description
Utilities	Hard Drive Utilities • **Save/Restore GPT of System Hard Drive** Enabling this feature saves the GUID Partition Table (GPT) of the system hard drive. If the GPT is subsequently changed, the user is prompted to choose whether to restore GPT. Default is disabled. • **Boot Sector (GPT) Recovery Policy** Allows selection of the default action when a GPT event occurs. • **DriveLock/Automatic DriveLock** Allows you to assign or modify a master or user password for hard drives. When this feature is enabled, the user is prompted to provide one of the DriveLock passwords during POST. If neither is successfully entered, the hard drive remains inaccessible until one of the passwords is successfully provided during a subsequent cold-boot sequence. NOTE: This selection appears only when at least one drive that supports the DriveLock feature is attached to the system. IMPORTANT: Be aware that these settings take place immediately. It is not necessary to save. IMPORTANT: Be sure to document the DriveLock password. Losing a DriveLock password will render a drive permanently locked. NOTE: Disable DriveLock on NVMe drives before using applications for hardware-based encryption. After you select a drive, the following options are available: – Set DriveLock Master Password. Sets the drive's master password but does not enable DriveLock. – Enable DriveLock. Sets the drive's user password and enables DriveLock. • **Secure Erase** Lets you select a hard drive to completely erase. After you erase a hard drive with a program that uses Secure Erase firmware commands, no file recovery program, partition recovery program, or other data recovery method can extract data from the drive. • **Allow OPAL Hard Drive SID Authentication** BIOS supports drive encryption using the DriveLock feature by creating the storage device's ownership key. If BIOS creates the key, any third-party applications (including other encryption software) are not allowed to perform certain drive operations such as establishing their own key using SID. Encryption software applications might not be limited by SID authentication lockout depending on how they are designed. Default is disabled.
Absolute Persistence Module Current State	Shows the current state of the Absolute Persistence module. Yes: Disabled No: Available
System Management Command	Allows authorized personnel to reset security settings during a service event. Default is enabled.
Restore Security Settings to Factory Default	This action resets security devices, clears BIOS passwords (not including DriveLock), and restores settings in the **Security menu** to factory defaults.

Computer Setup Advanced

This table provides information about the Computer Setup Advanced menu.

NOTE: Support for specific Computer Setup options can vary, depending on the hardware configuration.

Table 8-3 Computer Setup Advanced (for advanced users)

Option	Heading
Display Language	Lets you select the language of the menus in F10 Setup and the keyboard layout.
Scheduled Power-On	This feature wakes the system when it is off at a specified date and time.
Boot Options	Select the devices that the computer can boot from, as well as other options, including: • Startup Delay (sec): Enabling this feature adds a user-specified delay to the POST process. One purpose for the delay is to provide additional time to activate hotkeys such as esc for the Startup Menu or f10 for Computer Setup. • Fast Boot: Default is enabled. • CD-ROM Boot (select products only): Default is enabled. • USB Storage Boot: Default is enabled. • Network (PXE) Boot: Default is enabled. • After Power Loss: Default is Power Off. – Power off: Causes the computer to remain off when power is restored. – Power on: Causes the computer to turn on automatically as soon as power is restored. – Previous state: Causes the computer to turn on automatically as soon as power is restored, if it was on when power was lost. NOTE: If the system is configured to Power On from Keyboard Ports in Power Management Options, this setting is forced to Power On. • Prompt on Memory Size Change: Default is enabled. • Prompt on Fixed Storage Change: Default is disabled. • Audio Alerts During Boot: Default is enabled. When disabled, most audible beeps from errors, warnings, and password prompts during boot up are suppressed. • Numlock on at boot: Default is disabled. • UEFI Boot Order: Specify the order in which UEFI boot sources are checked for a bootable operating system image. The default boot order is: 1. USB 2. SATA DVD 3. SATA hard drives 4. M.2 devices 5. Network boot

Table 8-3 Computer Setup Advanced (for advanced users) (continued)

Option	Heading
Boot Options	NOTE: Use the UP and DOWN arrows to highlight an item. Press enter to select. Use the UP and DOWN arrows to move a selected item. Press f5 to enable or disable. Press esc to exit. NOTE: MS-DOS drive lettering assignments might not apply after a non-MS-DOS operating system has started. **Shortcut to Temporarily Override Boot Order** To boot **one time** from a device other than the default device specified in Boot Order, restart the computer and press esc (to access the Startup menu) and then f9 (Boot Menu), or only f9 (skipping the Startup menu) when the power button light turns white. After POST is completed, a list of bootable devices is displayed. Use the arrow keys to select the preferred bootable device and press enter. The computer then boots from the selected non-default device for this one time.
HP Sure Recover	**HP Sure Recover** If enabled and HP Sure Recover is launched, the system firmware honors local and remote requests to reinstall the operating system. If it is disabled, all requests to reinstall the operating system are ignored. Default is enabled. **Recover from Network** Allows system firmware to retrieve the recovery agent from the network. If disabled, system firmware retrieves the recovery agent from a local drive. Default is enabled. **Recover after Boot Failure** If enabled and no bootable UEFI operating system is found, system firmware launches HP Sure Recover. Default is disabled. **Recover before Boot Failure Recovery** If enabled and HP Sure Recover is launched because of a boot failure, the user is notified of the boot failure and asked to choose whether to start or cancel HP Sure Recover. This setting is displayed only if **Recover after Boot Failure** is selected. **Recovery Agent** Displays recovery agent information. This information is displayed only if **Recover from Network** is selected. **Recovery Image** Displays recovery image information. This information is displayed only if **Recover from Network** is selected. **OS Recovery Image Version**. Display the version of the recovery image stored in the embedded secure storage device. This information is displayed only if an embedded secure storage device is installed. **OS Recovery Driver Version** Display the version of the recovery driver stored in the embedded secure storage device. This information is displayed only if an embedded secure storage device is installed.

Table 8-3 Computer Setup Advanced (for advanced users) (continued)

Option	Heading
System Options	**Configure storage controller for Intel Optane™** (Intel products only) Enables the Intel Optane memory module. **Configure storage controller for RAID** Enables RAID. Default is enabled. **Limit PCIe Speed** (workstation models only) Lets you restrict the maximum speed of the PCI Express devices to previous generations. The following settings are possible: • Auto • Gen 1 (2.5 Gbps) • Gen 2 (5 Gbps) • Gen 3 (8 Gbps) **Turbo-boost** (Intel products only) Allows Intel Turbo Boost Technology to improve performance when operation conditions allow. Default is enabled. **Hyperthreading** (Intel products only) Lets you control processor capability. Default is enabled. **Virtualization Technology (VTx)** (Intel only) Controls the virtualization features of the processor. Changing this setting requires turning the computer off and then back on. Default is disabled. **Virtualization Technology for Directed I/O (VTd)** (Intel only) Controls virtualization DMA remapping features of the chipset. Changing this setting requires turning the computer off and then back on. Default is disabled. **SVM CPU Virtualization** (AMD® products only) Enables AMD-V and AMD-Vi virtualization features on AMD-based systems **Enhanced Hello Sign-in** (systems with supporting hardware for biometric identification only) Allows for secure logon using the Windows Hello feature. **DMA Protection** Enables DMA redirection using IOMMU for enhanced security. Default is enabled. NOTE: Requires that VTd is enabled. **Pre-boot DMA protection** Secures memory access through DMA to allowed regions prior to operating system startup. **Full encryption of main memory (DRAM)** (select products only) Stores all data to DRAM in an encrypted format. Default is enabled. **PCI slots** (vary by product) Lets you enable or display PCI slots. Default is enabled.

Table 8-3 Computer Setup Advanced (for advanced users) (continued)

Option	Heading
System Options	**M.2 slots** (vary by product) Let you enable or display M.2 slots. Default is enabled. **Performance Control** (High Performance Mode/Performance Mode/Quiet Mode) Select **Quite Mode** to prioritize acoustics. Select **Performance Mode** for a balance between performance and acoustics. Select **High Performance Mode** to prioritize performance. **Power Button Override** (disable/4 sec/15 sec/30 sec) Lets you enable and select the number of seconds you have to hold down the power button for it to force the system to turn off. Default is 4 sec. **USB Type-C Connector System Software Interface (UCSI)** (select products only) Allows UCSI to be exposed to the operating system (ACPI table). **HP Application Driver** Provides ACPI structure to enable HP common software application framework. The driver is provided in the latest HP support software that you can download from the web. NOTE: Device Manager shows an alert if this setting is enabled without the HP application driver installed. **AMD DASH** Lets you enable AMD Remote system management capability. Default is disabled. **Hardware enabled Spectre Variant 2 Mitigation** Enables Single Thread Indirect Branch Predictor (STIBP) functionality in AMD processors. Default is disabled.

Table 8-3 Computer Setup Advanced (for advanced users) (continued)

Option	Heading
Built-In Device Options	**Embedded LAN Controller** (select products only) Select to show the device in the operating system. Default is enabled. **Wake On LAN** Lets you either disable the Wake On LAN feature or configure where the computer boots, including the network or hard drive. Default is boot to network. **LAN Controller Option (1)(2)** (select products only) Enables the integrated network controller in the designated rear option slot. **Dust Filter** (select products only) Default is disabled. **Dust Filter Reminder (Days)** (select products only) Default is 60. **Allow No Panel configuration** (All-in-One 1000 series models only) Allows operation of the base unit without a boot warning when the panel is not installed. **Integrated Video** (models with discrete graphics) Disables the integrated video device. When not using integrated video, disabling the integrated video will free some system memory. **VGA Boot Device** (models with discrete graphics) Selects the graphics controller to use as the primary VGA device during boot-up when there are multiple graphics devices. The firmware can use only one graphics device when booting up. **Video Memory Size** Lets you manage graphics memory allocation. The value you choose is allocated permanently to graphics and is unavailable to the operating system. **Integrated Camera** Lets you disable the integrated camera. Default is enabled. **Audio Device** Select to show audio devices in the operating system, including integrated microphone, internal speakers, and headphone out. When selected, operating system visibility of each audio device is controlled independently. When this setting is cleared, all audio devices are hidden from the operating system. Individual audio device settings are also disabled. Default is enabled. **Microphone** Clear to disable the integrated microphone. This does not affect devices plugged into audio jacks. The disable and lock setting prevents other audio ports from being remapped to the microphone function in the operating system. Default is enabled. **Internal Speakers** (does not affect external speakers) Clear to disable the chassis speaker or speakers. This function is applicable to normal audio playback in the operating system and does not affect the error or warning beeps during POST. Default is enabled. **Headphone Output** Clear to disable the headphone jack. Default is enabled.

Table 8-3 Computer Setup Advanced (for advanced users) (continued)

Option	Heading
Built-In Device Options	**Collaboration Buttons** (select products only) Clear to disable the collaboration buttons. Default is enabled. **Button Sensitivity** (select products only) Controls touch sensitivity of collaboration buttons. Select from low, medium, or high. **LAN/WLAN auto switching** Select to enable auto switching between a wired and wireless connection. Default is disabled. **Wake on WLAN** Select to enable wake on WLAN. Default is disabled. **M.2 USB/Bluetooth** Select to enable the M.2 controller. Default is enabled. **Increase Idle Fan Speed (%)** Increases the minimum fan speeds over the normal settings while still enabling normal control using the internal thermal sensors. **Force enable HP Sure View** Enables the HP Sure View privacy panel by changing the screen brightness.

Table 8-3 Computer Setup Advanced (for advanced users) (continued)

Option	Heading
Port Options	**USB ports** (varies by model) Lets you enable specific USB ports. Default is enabled. **USB Legacy Port Charging** Lets you enable USB charging port capability when the computer is in hibernate or shutdown mode. Default is enabled. **USB Type-C Downstream Charging** Lets you enable USB charging port capability when the computer is in hibernate, on, or off. Default is enabled. **Media Card Reader/SD_RDR USB** Enables the media card reader connector (labeled SD_RDR) on a desktop. Default is enabled. **SATA** (varies by model) Lets you hide SATA ports from the operating system. Default is enabled (not hidden). **Serial Port** (varies by model) Lets you enable specific serial ports. Default is enabled. **Serial Port Voltage** (Retail Point-of-Sale models only; ports vary by model) Lets you configure powered serial port voltage selection on RPOS units that include this feature. Default is 0 Volts. • 0 Volts • 5 Volts • 12 Volts **Cash Drawer Port** (Retail Point-of-Sale models only) Controls whether the cash drawer port can be activated. Default is enabled. **Restrict USB Devices** Specify the following categories of USB devices to enable: • Allow all USB devices (default) • Allow only keyboard and mouse • Allow all but storage devices and hubs When some devices are restricted, the system will disable USB ports that do not meet the allowed criteria. This feature is usually combined with similar policies within the operating system because USB devices can be moved to different ports. The ports disabled by the BIOS remain disabled until the system is restarted.

Table 8-3 Computer Setup Advanced (for advanced users) (continued)

Option	Heading
Power Management Options	**Runtime Power Management** Allows certain operating systems to reduce processor voltage and frequency when the current software load does not require the full capabilities of the processor. Default is enabled. **Extended Idle Power States** Allows certain operating systems to decrease the processors power consumption when the processor is idle. Default is enabled. **S5 Maximum Power Savings** Enabling this feature reduces the power of the system as much as possible in the S5 state. Power is removed from the wake up circuitry, the expansion slots, and any management features while in S5. Default is disabled. **SATA Power Management** Enables or disables SATA bus, device power management, or both. Default is enabled. **PCI Express Power Management** Enabling this option permits the PCI Express links to use Active Power State Management (ASPM) to enter lower power states while not in use. Default is enabled. **Power On from Keyboard Ports** When enabled, this feature allows a key press to turn on the system when it is off (S5 state). If using a USB keyboard, you must plug it into one of the rear ports labeled with the keyboard icon. Default is disabled. **Unique Sleep State Blink Rates** This feature is designed to provide a visual indication of what Sleep state the system is in. Each Sleep state has a unique blink pattern. Default is disabled. NOTE: A normal shutdown goes to the S4 state for Windows 8 or later. S0 (On) = solid white light. S3 (Stand By) = 3 blinks at 1 Hz (50% duty cycle) followed by a pause of 2 seconds (white light), repeated cycles of 3 blinks and a pause. S4 (Hibernation) = 4 blinks at 1 Hz (50% duty cycle) followed by a pause of 2 seconds (white light), repeated cycles of 4 blinks and a pause. S5 (Soft Off) = Light is off.

Table 8-3 Computer Setup Advanced (for advanced users) (continued)

Option	Heading
Remote Management Options (Intel only)	**Active Management Technology (AMT)** Allows you to discover, repair, and protect networked computing devices. Default is enabled. **USB Key Provisioning Support** Enables AMT provisioning using a USB storage device. Default is disabled. **USB Redirection Support** USB redirection allows USB devices plugged into a client computer to be transparently redirected to the guest operating system. Default is enabled. **Unconfigure AMT on next boot**. Resets AMT configuration options on next boot. Default is Do Not Apply. **SOL Terminal Emulation Mode** SOL (serial-over-LAN) terminal emulation mode is only activated during remote AMT (Active Management Technology) redirection operations. The emulation options allow administrators to select which mode works best with their console. Default is ANSI. **Show Unconfigure ME Confirmation Prompt** Requires user confirmation when unconfiguring the Intel Management Engine. Default is enabled. **Verbose Boot Messages** Verbose boot shows additional logging information during startup, which is mainly for debugging if something goes wrong during bootup. Default is enabled. **Watchdog Timer** Allows you to set the amount of time for an operating system and BIOS watchdog alert to be sent if the timers are not deactivated. BIOS watchdog is deactivated by BIOS and would indicate that a halt occurred during execution if the alert is sent to the management console. An operating system alert is deactivated by the operating system image and would indicate that a hang occurred during its initialization. Default is enabled. • OS Watchdog Timer (min.): Default is 5 min. • BIOS Watchdog Timer (min.): Default is 5 min. **CIRA Timeout (min.)** CIRA is Customer Initiated Remote Assistance, an Intel service to help users employing Active Management Technology (AMT). Default is 1.

Table 8-3 Computer Setup Advanced (for advanced users) (continued)

Option	Heading
Thunderbolt Options (select products only)	**Thunderbolt Mode** Enables Thunderbolt™ connections on the Type-C port. When cleared, disables Thunderbolt connections on the Type-C port and disables PCIe tunneling on USB4® connections. **Require BIOS PW to change Thunderbolt Security Level** When selected, **Thunderbolt Security Level** cannot be changed unless a BIOS administrator password has been created. This setting cannot be disabled if DMA Protection (System Options) is enabled. **Thunderbolt Security Level** • PCIe and DisplayPort – No Security: Any Thunderbolt device detected that requests a PCI-express connection is connected to the system PCI-express bus without approval by the local user. • PCIe and DisplayPort – User Authorization (default): Each Thunderbolt peripheral includes a unique identifier used to determine if the device has been previously connected. If the user previously selected **Always Connect** for a device, it is automatically connected to the PCI-Express bus when attached. • PCIe and DisplayPort – Secure Connect: Offers enhanced protection for authenticating a previously connected Thunderbolt device beyond relying on its identifier. The device is provisioned with a key when initially connected, and on subsequent connections a challenge-response is implemented to verify the device before it is connected to the PCI-express bus. • DisplayPort™ only: Permits only USB and DisplayPort functionality to be available via the Type-C Thunderbolt port. PCI-Express will not be connected from the Thunderbolt device to the internal PCI-express interface, thus any Thunderbolt device that requires PCI-Express will not function correctly. **Native PCIe Hot Plug** Enables hot plug support to the system PCI-Express bus.
Remote HP PC Hardware Diagnostics	**Settings** Sets the configuration for Remote HP PC Hardware Diagnostics, including the URLs used for download and upload and scheduled execution frequency. **Execute Remote HP PC Hardware Diagnostics** Select to immediately execute Remote HP PC Hardware Diagnostics based on the how settings are configured. Any unsaved BIOS settings will be lost.

9 POST error messages

This section lists the error codes, error messages, and the various indicator light and audible sequences that you might encounter during Power-On Self-Test (POST) or computer restart, the probable source of the problem, and steps you can take to resolve the error condition.

POST Message Disabled suppresses most system messages during POST, such as memory count and non-error text messages. If a POST error occurs, the screen will display the error message. To manually switch to the POST Messages Enabled mode during POST, press any key except f10, f11, or f12. The default mode is POST Message Disabled.

The POST mode selection determines the speed at which the computer loads the operating system and the extent to which it is tested.

Quick Boot is a fast startup process that does not run all of the system level tests, such as the memory test. Full Boot runs all of the ROM-based system tests and takes longer to complete.

You can enable Full Boot to run every 1 to 30 days on a regularly scheduled basis. To establish the schedule, reconfigure the computer to the Full Boot Every x Days mode, using Computer Setup.

POST numeric codes and text messages

This section identifies those POST errors that have numeric codes associated with them. The section also includes some text messages that you might encounter during POST.

NOTE: The computer beeps once after a POST text message is displayed on the screen.

Table 9-1 **POST numeric codes and text messages**

Control panel message	Description	Recommended action
002-Option ROM Checksum Error	System ROM or expansion board option ROM checksum.	1. Verify the correct ROM. 2. Flash the ROM if needed. 3. If an expansion board was recently added, remove it to see if the problem remains. 4. Clear CMOS. 5. If the message disappears, there might be a problem with the expansion card. 6. Replace the system board.
003-System Board Failure	DMA or timers.	1. Clear CMOS. 2. Replace the system board.
005-Real-Time Clock Power Loss	Invalid time or date in configuration memory. RTC battery might need to be replaced.	Reset the date and time under Control Panel (you can also use Computer Setup). If the problem persists, replace the RTC battery.

Table 9-1 POST numeric codes and text messages (continued)

Control panel message	Description	Recommended action
008-Microcode Patch Error	Processor is not supported by the BIOS.	1. Upgrade BIOS to proper version. 2. Change the processor. NOTE: When an update to the BIOS is performed using a Softpaq, HP CMSL or Windows Update, the installation process copies files to the EFI partition on the operating system storage device. The EFI partition must be at least 300 MB for this process to complete successfully. If you are not using the HP image from the factory, you must create an EFI partition that is at least 300 MB when installing the operating system.
009-PMM Allocation Error During MEBx Download	Memory error during POST execution of the Management Engine (ME) BIOS Extensions option ROM.	1. Reboot the computer. 2. Unplug the power cord, reseat the memory modules, and reboot the computer. 3. If the memory configuration was recently changed, unplug the power cord, restore the original memory configuration, and reboot the computer. 4. If the error persists, replace the system board.
00A-Product Information Not Valid	The product information programmed into the system board is missing or invalid.	Use Computer Setup (F10) Utility on page 68 to update this information.
00B-MEBx Module Did Not Checksum Correctly	Memory error during POST execution of the Management Engine (ME) BIOS Extensions option ROM.	1. Reboot the computer. 2. Unplug the power cord, reseat the memory modules, and reboot the computer. 3. If the memory configuration was recently changed, unplug the power cord, restore the original memory configuration, and reboot the computer. 4. If the error persists, replace the system board.
00C-PMM Deallocation Error During MEBx Cleanup	Memory error during POST execution of the Management Engine (ME) BIOS Extensions option ROM.	1. Reboot the computer. 2. Unplug the power cord, reseat the memory modules, and reboot the computer. 3. If the memory configuration was recently changed, unplug the power cord, restore the original memory configuration, and reboot the computer. 4. If the error persists, replace the system board.

Table 9-1 POST numeric codes and text messages (continued)

Control panel message	Description	Recommended action
00D-Setup Error During MEBx Execution	MEBx selection or exit resulted in a setup failure.	1. Reboot the computer. 2. Unplug the power cord, reseat the memory modules, and reboot the computer. 3. If the memory configuration was recently changed, unplug the power cord, restore the original memory configuration, and reboot the computer. 4. If the error persists, replace the system board.
00E-Inventory Error During MEBx Execution	BIOS information passed to the MEBx resulted in a failure.	1. Reboot the computer. 2. If the error persists, update to the latest BIOS version. 3. If the error still persists, replace the system board. NOTE: When an update to the BIOS is performed using a Softpaq, HP CMSL or Windows Update, the installation process copies files to the EFI partition on the operating system storage device. The EFI partition must be at least 300 MB for this process to complete successfully. If you are not using the HP image from the factory, you must create an EFI partition that is at least 300 MB when installing the operating system.
00F-Interface Error During MEBx Execution	MEBx operation experienced a hardware error during communication with the ME.	1. Reboot the computer. 2. If the error persists, update to the latest BIOS version. 3. If the error still persists, replace the system board. NOTE: When an update to the BIOS is performed using a Softpaq, HP CMSL or Windows Update, the installation process copies files to the EFI partition on the operating system storage device. The EFI partition must be at least 300 MB for this process to complete successfully. If you are not using the HP image from the factory, you must create an EFI partition that is at least 300 MB when installing the operating system.
100-Front Audio Not Connected	Front audio cable has been detached or unseated from the system board.	Reconnect or replace front audio cable.
2E1-Memory Size Error	Memory amount has changed since the last boot (memory added or removed).	The system memory size is different from the last startup. The most common reason is the removal of memory from the system board. Press the f1 key to save the memory changes.

Table 9-1 POST numeric codes and text messages (continued)

Control panel message	Description	Recommended action
2E2-Memory Error	Memory module configuration failed during startup.	1. Be sure that memory modules are correctly installed. 2. Verify proper memory module type. 3. Remove and replace the identified faulty memory modules. 4. If the error persists after replacing memory modules, replace the system board.
2E3-Incompatible Memory Module in Memory Socket(s) X, X, ...	A memory module in the memory socket(s) identified in the error message is missing critical SPD information, or is incompatible with the chipset.	1. Verify proper memory module type. 2. Try another memory socket. 3. Replace with a supported module.
2E4-DIMM Configuration Warning	Populated DIMM Configuration is not optimized.	Rearrange the DIMMs so that each channel has the same amount of memory.
2E5-ECC Memory Module Detected on Unsupported Platform	Recently added memory modules support ECC memory error correction.	1. If additional memory was recently added, remove it to see if the problem remains. 2. Check product documentation for memory support information.
2E6-Memory Not Configured Correctly for Proper MEBx Execution	DIMM1 is not installed.	Be sure that a memory module is in the DIMM1 socket and that it is properly seated.
300-Configuration Change Warning	A change in storage configuration has been detected (see the **Boot Options** menu in BIOS Setup to enable this feature). Either the installed hardware has changed, storage or firmware mode might have been changed, or a storage device might have failed to respond.	If no changes were made before this warning, check that the drives are connected properly to power cables and system board. User Diagnostics (f2 during startup) might help identify any problem with specific devices.
301-Hard Disk 1: SMART Hard Drive Detects Imminent Failure	Hard drive will soon fail. Some hard drives have a hard drive firmware patch that will fix an erroneous error message.	1. Determine whether hard drive is giving correct error message. Run the Drive Protection System test using F2 Diagnostics when booting the computer. 2. Apply hard drive firmware patch if applicable. The patch is available at http://www.hp.com/support. 3. Back up contents and replace hard drive.

Table 9-1 POST numeric codes and text messages (continued)

Control panel message	Description	Recommended action
302-Hard Disk 2: SMART Hard Drive Detects Imminent Failure	Hard drive will soon fail. Some hard drives have a hard drive firmware patch that will fix an erroneous error message.	1. Determine whether hard drive is giving correct error message. Run the Drive Protection System test using F2 Diagnostics when booting the computer. 2. Apply hard drive firmware patch if applicable. The patch is available at http://www.hp.com/support. 3. Back up contents and replace hard drive.
309 - 30C: Hard Disk 3-6: SMART Hard Drive Detects Imminent Failure	Hard drive will soon fail. Some hard drives have a hard drive firmware patch that will fix an erroneous error message.	1. Determine whether hard drive is giving correct error message. Run the Drive Protection System test using F2 Diagnostics when booting the computer. 2. Apply hard drive firmware patch if applicable. The patch is available at http://www.hp.com/support. 3. Back up contents and replace hard drive.
3F0-Boot Device Not Found	Boot device not found.	Insert boot device or load operating system.
3F1-Hard Disk 1 Error	Hard disk 1 error.	1. Check cables and replace if necessary. 2. Clear CMOS. 3. Replace the hard disk drive.
3F2-Hard Disk 2 Error	Hard disk 2 error.	1. Check cables and replace if necessary. 2. Clear CMOS. 3. Replace the hard disk drive.
400-Serial Port A Address Conflict Detected	Both external and internal serial ports are assigned to the same resources.	1. Remove any serial port expansion cards. 2. Clear CMOS. 3. Reconfigure card resources, run Computer Setup or Windows utilities, or do both if needed.
401-Serial Port B Address Conflict Detected	Both external and internal serial ports are assigned to the same resources.	1. Remove any serial port expansion cards. 2. Clear CMOS. 3. Reconfigure card resources, run Computer Setup or Windows utilities, or do both if needed.

Table 9-1 POST numeric codes and text messages (continued)

Control panel message	Description	Recommended action
402-Serial Port C Address Conflict Detected	Both external and internal serial ports are assigned to the same resources.	1. Remove any serial port expansion cards. 2. Clear CMOS. 3. Reconfigure card resources, run Computer Setup or Windows utilities, or do both if needed.
403-Serial Port D Address Conflict Detected	Both external and internal serial ports are assigned to the same resources.	1. Remove any serial port expansion cards. 2. Clear CMOS. 3. Reconfigure card resources, run Computer Setup or Windows utilities, or do both if needed.
419-Out of Memory Space for Option ROMs	Recently added PCI expansion card contains an option ROM too large to download during POST.	If a PCI expansion card was recently added, remove it to see if the problem remains.
41A-Front USB1/USB2 Not Connected	Front USB cable has been detached or unseated from system board.	Reconnect or replace front USB cable.
41B-Device in PCI Express Slot Failed To Initialize	There is an incompatibility or problem with a PCIe device and the system or PCIe link could not be configured to a valid bus width or speed.	Try rebooting the system. If the error reoccurs, the device might not work with this system
43A-USB Type-C I2C Not Connected	Cable is required between I2C on card and USB-C on the system board.	Install cable between I2C on card and USB-C on the system board.
43B-More Than One USB Type-C Card Installed	More than one USB Type-C card is installed.	Remove USB Type-C card so that only one is installed.
500-BIOS Recovery	A system BIOS recovery has occurred.	Not applicable.
513-(GFX) Configuration requires a front chassis fan and this fan is not detected.	The system does not detect a front chassis fan assembly when installing a graphics card.	Install a front chassis fan assembly.
517-Memory configuration requires a memory fan and this fan is not detected.	The system does not detect a memory fan when installing a memory module.	Install a memory fan.
519-Aux fan not detected	The system does not detect a PCIe retainer fan assembly when installing a graphics card.	Install a PCIe retainer fan assembly.
520-Memory configuration requires a second memory fan and this fan is not detected.	The system does not detect a memory fan when installing a memory module.	Install a memory fan.
525-(GFX) Configuration requires a second front chassis fan and this fan is not detected.	The system does not detect a front chassis fan assembly when installing a graphics card.	Install a front chassis fan assembly.
70x-Wireless Mode Not Supported	The system has detected a wireless module installed in the system that is not supported and has been disabled.	Replace with a supported module.

Table 9-1 POST numeric codes and text messages (continued)

Control panel message	Description	Recommended action
800-Keyboard Error	Keyboard failure.	1. Reconnect keyboard with computer turned off. 2. Check connector for bent or missing pins. 3. Be sure that none of the keys are pressed. 4. Replace keyboard.
801-Keyboard or System Unit Error	Keyboard failure.	1. Reconnect the keyboard with computer turned off. 2. Be sure that none of the keys are pressed. 3. Replace the keyboard. 4. Replace the system board.
900-CPU Fan Not Detected	CPU fan is not connected or might have malfunctioned.	1. Reseat fan. 2. Reseat fan cable. 3. Replace fan.
901-Chassis, Rear Chassis, Front Chassis, or PCIe Blower Fan Not Detected	Fan is not connected or might have malfunctioned.	1. Reseat fan. 2. Reseat fan cable. 3. Replace fan.
904-SATA Cabling Error	One or more SATA devices are improperly attached. For optimal performance, the SATA0, SATA1, and SATA2 ports should be used for hard drives before other ports.	Be sure that SATA connectors are used in ascending order. For one device, use SATA0. For two devices, use SATA0 and SATA1. For three devices, use SATA0, SATA1, and SATA2.
90B-Fan Failure	The system has detected that a cooling fan is not operating correctly.	1. Reseat fan. 2. Reseat fan cable. 3. Replace fan.
90D-System Temperature	Thermal shutdown occurred. The system BIOS has detected that your machine was previously shut down to avoid overheating. Overheating might occur if the cooling vents are blocked or the operating temperature exceeds the system specifications. The machine should return to normal operation once the situation is resolved.	Be sure system has proper airflow.
90E-Power Supply Fan Not Detected	Power supply fan is not connected or might have malfunctioned.	1. Reseat power supply fan. 2. Reseat fan cable. 3. Replace power supply fan.
910–Filter Warning	Airflow filter is dirty.	Replace the airflow filter.

Table 9-1 POST numeric codes and text messages (continued)

Control panel message	Description	Recommended action
911-Graphics Module Fan Not Detected	Graphics card fan is not connected or might have malfunctioned.	1. Reseat graphics card fan. 2. Reseat fan cable. 3. Replace graphics card fan.
912-Incorrect CPU Cooler Installed For This Configuration	The processor cooler/heat sink does not match processor power requirement.	Replace the cooler/heat sink to match the processor power requirement.
915-Front Panel OcuLink Cable Not Connected	The cable from the system board to the front panel is not connected or might have malfunctioned.	1. Reseat cable. 2. Replace the cable.

Interpreting POST diagnostic front panel lights and audible codes

This section identifies the front panel light codes as well as the audible codes that can occur before or during POST that might not have an error code or text message associated with them.

CAUTION: When the computer is plugged into an AC power source, voltage is always applied to the system board. To reduce the risk of personal injury from electrical shock or hot surfaces, be sure to disconnect the power cord from the AC outlet and allow the internal system components to cool before touching.

During the system validation phase that occurs at system startup, the BIOS validates the functionality of the following subsystems and conditions:

- AC adapter
- System board power
- Processor failure
- BIOS corruption
- Memory failure
- Graphics failure
- System board failure
- BIOS authentication failure

If an error is detected, specific patterns of long and short blinks, accompanied by long and short beeps (where applicable) are used to identify the error. These patterns make up a two-part code:

- Major: The category of the error
- Minor: The specific error within the category

NOTE: Single beep and blink codes are not used.

Table 9-2 **Beep pattern error identification**

Number of long beeps or blinks	Error category
1	Not used
2	BIOS
3	Hardware
4	Thermal
5	System board

Patterns of blink/beep codes are determined by using the following parameters:

- 1-second pause occurs after the last major blink.
- 2-second pause occurs after the last minor blink.
- Beep error code sequences occur for the first five iterations of the pattern and then stop.
- Blink error code sequences continue until the computer is unplugged or the power button is pressed.

NOTE: Not all diagnostic lights and audible codes are available on all models.

The red LED blinks to represent the major error category (long blinks). The white LED blinks to represent the minor error category (short blinks). For example, *3.5* indicates 3 long red blinks and 5 short white blinks to communicate the processor is not detected.

Table 9-3 **Interpreting POST diagnostic front panel lights and audible codes**

Category	Major/minor code	Description
BIOS	2.2	The main area (DXE) of BIOS has become corrupted, and there is no recovery binary image available.
	2.3	The embedded controller policy requires the user to enter a key sequence.
	2.4	The embedded controller is checking or recovering the boot block.
Hardware	3.2	The embedded controller has timed out waiting for BIOS to return from memory initialization.
	3.3	The embedded controller has timed out waiting for BIOS to return from graphics initialization.
	3.4	The system board displays a power failure (crowbar).*
	3.5	The processor is not detected.*
	3.6	The processor does not support an enabled feature.
	3.7	System shutdown forced because cover was open.
Thermal	4.2	A processor over temperature condition has been detected.*
	4.3	An ambient temperature over temperature condition has been detected.
	4.4	An MXM over temperature condition has been detected.

Table 9-3 Interpreting POST diagnostic front panel lights and audible codes (continued)

Category	Major/minor code	Description
System board	5.2	The embedded controller cannot find valid firmware.
	5.3	The embedded controller has timed out waiting for the BIOS.
	5.4	The embedded controller has timed out waiting for BIOS to return from system board initialization.
	5.5	The embedded controller rebooted the system after a possible lockup condition had been detected through the use of a System Health Timer, Automated System Recovery Timer, or other mechanism.

* Indicates a hardware-triggered event; BIOS controls all other events.

10 Password security and resetting CMOS

This computer supports two security password features that you can establish through the Computer Setup Utilities menu: administrator password and power-on password.

When you establish only an administrator password, any user can access all the information on the computer except Computer Setup. When you establish only a power-on password, the power-on password is required to access Computer Setup and any other information on the computer. When you establish both passwords, only the administrator password will give you access to Computer Setup.

When both passwords are set, you can use the administrator password in place of the power-on password as an override to log in to the computer. This feature is useful for a network administrator.

IMPORTANT: Back up the BIOS settings or save them as custom defaults in case you need them later. You can back up in Computer Setup or with the BiosConfigUtility tool available from www.hp.com.

Changing a setup or power-on password

Use this procedure to change a password.

To change the power-on or setup password, complete the following steps:

1. Turn on or restart the computer.
   - To change the setup password, go to step 2.
   - To change the power-on password, go to step 3.
2. To change the setup password, as soon as the computer turns on:
   - Press esc while the “Press the ESC key for Startup Menu” message is displayed.
   - Press f10 to enter Computer Setup.
3. When the key icon appears, type your current password, a slash (/) or alternate delimiter character, your new password, another slash (/) or alternate delimiter character, and your new password again as shown:

   current password/new password/new password

   NOTE: Type the new password carefully because the characters do not appear on the screen.
4. Press enter.

The new password will take effect the next time the computer is restarted.

Deleting a setup or power-on password

Use this procedure to delete a password.

To delete the power-on or setup password, complete the following steps:

1. Turn on or restart the computer.
   - To delete the setup password, go to step 2.
   - To delete the power-on password, go to step 3.
2. To delete the setup password, as soon as the computer turns on:
   - Press esc while the “Press the ESC key for Startup Menu” message is displayed.
   - Press f10 to enter Computer Setup.
3. When the key icon appears, type your current password, a slash (/) or alternate delimiter character, your new password, another slash (/) or alternate delimiter character, and your new password again as shown:

   current password/
4. Press enter.

11 Backing up, restoring, and recovering

You can use Windows tools or HP software to back up your information, create a restore point, reset your computer, create recovery media, or restore your computer to its factory state. Performing these standard procedures can return your computer to a working state faster.

IMPORTANT: If you are performing recovery procedures on a tablet, the tablet battery must be at least 70% charged before you start the recovery process.

IMPORTANT: For a tablet with a detachable keyboard, connect the tablet to the keyboard base before beginning any recovery process.

Backing up information and creating recovery media

These methods of creating recovery media and backups are available on select products only.

Using Windows tools for backing up

HP recommends that you back up your information immediately after initial setup. You can do this task either using Windows Backup locally with an external USB drive or using online tools.

IMPORTANT: Windows is the only option that allows you to back up your personal information. Schedule regular backups to avoid information loss.

NOTE: If computer storage is 32 GB or less, Microsoft® System Restore is disabled by default.

Using the HP Cloud Recovery Download Tool to create recovery media (select products only)

You can use the HP Cloud Recovery Download Tool to create HP Recovery media on a bootable USB flash drive.

For details:

- Go to http://www.hp.com, search for HP Cloud Recovery, and then select the result that matches the type of computer that you have.

NOTE: If you cannot create recovery media yourself, contact support to obtain recovery discs. Go to http://www.hp.com/support, select your country or region, and then follow the on-screen instructions.

IMPORTANT: HP recommends that you follow the Restoring and recovery methods on page 102 to restore your computer before you obtain and use the HP recovery discs. Using a recent backup can return your machine to a working state sooner than using the HP recovery discs. After the system is restored, reinstalling all the operating system software released since your initial purchase can be a lengthy process.

Restoring and recovering your system

You have several tools available to recover your system both within and outside of Windows if the desktop cannot load.

HP recommends that you attempt to restore your system using the Restoring and recovery methods on page 102.

Creating a system restore

System Restore is available in Windows. The System Restore software can automatically or manually create restore points, or snapshots, of the system files and settings on the computer at a particular point.

When you use System Restore, it returns your computer to its state at the time you made the restore point. Your personal files and documents should not be affected.

Restoring and recovery methods

After you run the first method, test to see whether the issue still exists before you proceed to the next method, which might now be unnecessary.

1. Run a Microsoft System Restore.
2. Run Reset this PC.

   NOTE: The options **Remove everything** and then **Fully clean the drive** can take several hours to complete and leave no information on your computer. It is the safest way to reset your computer before you recycle it.

3. Recover using HP Recovery media. For more information, see Recovering using HP Recovery media on page 102.

For more information about the first two methods, see the Get Help app:

Select the **Start** button, select the **Get Help** app, and then enter the task you want to perform.

NOTE: You must be connected to the internet to access the Get Help app.

Recovering using HP Recovery media

You can use HP Recovery media to recover the original operating system and software programs that were installed at the factory. On select products, it can be created on a bootable USB flash drive using the HP Cloud Recovery Download Tool.

For details, see Using the HP Cloud Recovery Download Tool to create recovery media (select products only) on page 101.

NOTE: If you cannot create recovery media yourself, contact support to obtain recovery discs. Go to http://www.hp.com/support, select your country or region, and then follow the on-screen instructions.

To recover your system:

- Insert the HP Recovery media, and then restart the computer.

NOTE: HP recommends that you follow the Restoring and recovery methods on page 102 to restore your computer before you obtain and use the HP recovery discs. Using a recent backup can return your

machine to a working state sooner than using the HP recovery discs. After the system is restored, reinstalling all the operating system software released since your initial purchase can be a lengthy process.

Changing the computer boot order

If your computer does not restart using the HP Recovery USB flash drive, you can change the computer boot order, which is the order of devices listed in BIOS for startup information.

IMPORTANT: For a tablet with a detachable keyboard, connect the tablet to the keyboard base before beginning these steps.

To change the boot order:

1. Insert the HP Recovery USB flash drive.
2. Access the system **Startup** menu.
   - For computers or tablets with keyboards attached, turn on or restart the computer or tablet, quickly press esc, and then press f9 for boot options.
   - For tablets without keyboards, turn on or restart the tablet, and then quickly press and hold one of the following buttons:
     - Volume up
     - Volume down

     Then select **f9**.
3. Select the USB flash drive to boot from, and then follow the on-screen instructions.

Using HP Sure Recover (select products only)

Select computer models are configured with HP Sure Recover, a PC operating system (OS) recovery solution built into the hardware and software. HP Sure Recover can fully restore the HP OS image without installed recovery software.

Using HP Sure Recover, an administrator or user can restore the system and install:

- Latest version of the OS
- Platform-specific device drivers
- Software applications, in the case of a custom image

To access the latest documentation for HP Sure Recover, go to http://www.hp.com/support. Follow the on-screen instructions to find your product and locate your documentation.

12 Statement of memory volatility

For general information regarding nonvolatile memory in HP business computers, and to restore nonvolatile memory that can contain personal data after the system has been turned off and the hard drive has been removed, use these instructions.

HP business computer products that use Intel®-based or AMD®-based system boards contain volatile DDR memory. The amount of nonvolatile memory present in the system depends upon the system configuration. Intel-based and AMD-based system boards contain nonvolatile memory subcomponents as originally shipped from HP, with the following assumptions:

- No subsequent modifications were made to the system.
- No applications, features, or functionality were added to or installed on the system.

Following system shutdown and removal of all power sources from an HP business computer system, personal data can remain on volatile system memory (DIMMs) for a finite period of time and also remains in nonvolatile memory. Use the following steps to remove personal data from the computer, including the nonvolatile memory found in Intel-based and AMD-based system boards.

NOTE: If your tablet has a keyboard base, connect to the keyboard base before beginning steps in this chapter.

Current BIOS steps

Use these instructions to restore nonvolatile memory.

1. Follow these steps to restore the nonvolatile memory that can contain personal data. Restoring or reprogramming nonvolatile memory that does not store personal data is neither necessary nor recommended.

   a. Turn on or restart the computer, and then quickly press esc.

   NOTE: If the system has a BIOS administrator password, type the password at the prompt.

   b. Select **Main**, select **Apply Factory Defaults and Exit**, and then select **Yes** to load defaults. The computer restarts.

   c. During the restart, press esc while the "Press the ESC key for Startup Menu" message is displayed at the bottom of the screen.

   NOTE: If the system has a BIOS administrator password, type the password at the prompt.

   d. Select the **Security** menu, select **Restore Security Settings to Factory Defaults**, and then select **Yes** to restore security level defaults. The computer restarts.

   e. During the restart, press esc while the "Press the ESC key for Startup Menu" message is displayed at the bottom of the screen.

   NOTE: If the system has a BIOS administrator password, type the password at the prompt.

f. If an asset or ownership tag is set, select the **Security** menu and scroll down to the **Utilities** menu. Select **System IDs**, and then select **Asset Tracking Number**. Clear the tag, and then make the selection to return to the prior menu.

g. If a DriveLock password is set, select the **Security** menu, and scroll down to **Hard Drive Utilities** under the **Utilities** menu. Select **Hard Drive Utilities**, select **DriveLock**, and then clear the check box for **DriveLock password on restart**. Select **OK** to proceed.

h. Select the **Main** menu, and then select **Reset BIOS Security to factory default**. Select **Yes** at the warning message. The computer restarts.

i. During the restart, press esc while the "Press the ESC key for Startup Menu" message is displayed at the bottom of the screen.

NOTE: If the system has a BIOS administrator password, type the password at the prompt.

j. Select the **Main** menu, select **Apply Factory Defaults and Exit**, select **Yes** to save changes and exit, and then select **Shutdown**.

k. Restart the system. If the system has a TPM, fingerprint reader, or both, one or two prompts will appear—one to clear the TPM and the other to Reset Fingerprint Sensor. Press or tap f1 to accept or f2 to reject.

l. Remove all power and system batteries for at least 24 hours.

2. Complete one of the following tasks:

- Remove and retain the storage drive.
- Clear the drive contents by using a third-party utility designed to erase data from an SSD.
- Clear the contents of the drive by using the following BIOS Setup Secure Erase command option steps:

NOTE: If you clear data using Secure Erase, you cannot recover it.

a. Turn on or restart the computer, and then quickly press esc.

b. Select the **Security** menu and scroll down to the esc menu.

c. Select **Hard Drive Utilities**.

d. Finish by completing one of these tasks:

- Under **Utilities**, select **Secure Erase**, select the hard drive storing the data you want to clear, and then follow the on-screen instructions to continue.
- Clear the contents of the drive using the following Disk Sanitizer commands steps:

i. Turn on or restart the computer, and then quickly press esc.

ii. Select the **Security** menu and scroll down to the **Utilities** menu.

iii. Select **Hard Drive Utilities**.

iv. Under **Utilities**, select **Disk Sanitizer**, select the hard drive with the data that you want to clear, and then follow the on-screen instructions to continue.

NOTE: The amount of time it takes for Disk Sanitizer to run can be several hours. Plug the computer into an AC outlet before starting.

Nonvolatile memory usage

Use this table to troubleshoot nonvolatile memory usage.

Table 12-1 **Troubleshooting information for nonvolatile memory usage**

Description	Volatility description	Storage user data	How to erase
Primary storage device, holds the OS, applications, and application settings	Nonvolatile, 8-256 GB of eMMC or NVMe SSD storage, removable	Yes[1]	See Current BIOS steps on page 104 for information about erasing the primary storage device.
System memory (RAM), holds transient data during system operation	Volatile, SODIMM socket. Removable (4 GB/8 GB/16 GB)	Yes	Unplug unit from power.
Permanent system BIOS settings	Nonvolatile, 16 KB, stored	No[2]	See Current BIOS steps on page 104 for information about clearing BIOS settings.
System boot ROM (BIOS)	Nonvolatile memory, 128 Mbit (16 MB) socketed, removable	No	Download the latest BIOS for your model from the HP website and follow the instructions to flash the BIOS that are on the website.
RTC (CMOS) RAM	Volatile memory, 256 bytes located in AMD embedded System on Chip (SoC)	No	**Desktop computers with a CMOS button:** Unplug unit from main power, remove top cover and press the **Clear CMOS** button. **Notebook and desktop computers without a CMOS button:** 1. Press and hold power button for 12 seconds. 2. Press Windows key + V, and then press power button.
Keyboard/mouse (ROM)	Nonvolatile, 2 KB embedded in the super I/O controller (SIO2)	Yes	N/A
Keyboard/mouse (RAM)	Volatile, 256 bytes embedded in the super I/O controller (SIO2)	No	Unplug unit from main power.
LOM EEPROM	Nonvolatile, 2 MB embedded in LAN controller	No	N/A
TPM	Nonvolatile, 51 KB ROM for firmware and 38 KB system parametric data	No[3]	See Current BIOS steps on page 104 for information about clearing TPM.

[1] Under typical operation, the only user data stored on the primary storage device are preferences for device configuration and settings for connections. However, the administrator can configure the system to allow users to store data locally.

[2] The only user data potentially stored in BIOS Settings are the ownership and asset tags, administrator password, and startup password.

[3] The TPM might contain encrypted passwords or certificates generated from user or administrator input.

Questions and answers

Use this section to answer your questions about nonvolatile memory.

1. **How can the BIOS settings be restored (returned to factory settings)?**

IMPORTANT: The restore defaults feature does not securely erase any information on your hard drive. See question and answer 6 for steps to securely erase information.

The restore defaults feature does not reset the Custom Secure Boot keys. See question and answer 7 for information about resetting the keys.

   a. Turn on or restart the computer, and then quickly press esc.

   b. Select **Main**, and then select **Apply Factory Defaults and Exit**.

   c. Follow the on-screen instructions.

   d. Select **Main**, select **Save Changes and Exit**, and then follow the on-screen instructions.

2. **What is a UEFI BIOS?**

   The Unified Extensible Firmware Interface (UEFI) BIOS is an industry-standard software interface between the platform firmware and an operating system (OS). It replaces the older legacy BIOS architecture.

   The UEFI BIOS provides an interface to display the system information and configuration settings and to change the configuration of your computer before an OS is loaded. BIOS provides a secure runtime environment that supports a GUI. In this environment, you can use either a pointing device (touch screen, touchpad, pointing stick, or USB mouse) or the keyboard to navigate and make menu and configuration selections. The UEFI BIOS also contains basic system diagnostics.

   In addition, the UEFI BIOS works to initialize the computer's hardware before loading and executing the OS; the runtime environment allows the loading and execution of software programs from storage devices to provide more functionality, such as advanced hardware diagnostics (with the ability to display more detailed system information) and advanced firmware management and recovery software.

3. **Where is the UEFI BIOS located?**

   The UEFI BIOS is located on a flash memory chip. You must use a utility to write to the chip.

4. **What kind of configuration data is stored on the DIMM Serial Presence Detect (SPD) memory module? How would this data be written?**

The DIMM SPD memory contains information about the memory module, such as size, serial number, data width, speed and timing, voltage, and thermal information. This information is written by the module manufacturer and stored on an EEPROM. You cannot write to this EEPROM when the memory module is installed in a computer. Third-party tools do exist that can write to the EEPROM when the memory module is not installed in a computer. Various third-party tools are available to read SPD memory.

5. **What is meant by "Restore the nonvolatile memory found in Intel-based system boards"?**

   This message relates to clearing the Real Time Clock (RTC) CMOS memory that contains computer configuration data.

6. **How can the BIOS security be reset to factory defaults and erase the data?**

   IMPORTANT: Resetting results in the loss of information.

   These steps do not reset Custom Secure Boot Keys. See question and answer 7 for information about resetting the keys.

   a. Turn on or restart the computer, and then quickly press esc.

   b. Select **Main**, and then select **Reset Security to Factory Defaults**.

   c. Follow the on-screen instructions.

   d. Select **Main**, select **Save Changes and Exit**, and then follow the on-screen instructions.

7. **How can the Custom Secure Boot Keys be reset?**

   Secure Boot is a feature to ensure that only authenticated code can start on a platform. If you enabled Secure Boot and created Custom Secure Boot Keys, disabling Secure Boot does not clear the keys. You must also select to clear the Custom Secure Boot Keys. Use the same Secure Boot access procedure that you used to create the Custom Secure Boot Keys, but select to clear or delete all Secure Boot Keys.

   a. Turn on or restart the computer, and then quickly press esc.

   b. Select the **Security** menu, select **Secure Boot Configuration**, and then follow the on-screen instructions.

   c. At the **Secure Boot Configuration** window, select **Secure Boot**, select **Clear Secure Boot Keys**, and then follow the on-screen instructions to continue.

Using HP Sure Start (select products only)

Select computer models are configured with HP Sure Start, a technology that continuously monitors your computer's BIOS for attacks or corruption.

If the BIOS becomes corrupted or is attacked, HP Sure Start restores the BIOS to its previously safe state, without user intervention. Those select computer models ship with HP Sure Start configured and enabled. HP Sure Start is configured and already enabled so that most users can use the HP Sure Start default configuration. Advanced users can customize the default configuration.

To access the latest documentation on HP Sure Start, go to http://www.hp.com/support.

13 Using HP PC Hardware Diagnostics

You can use the HP PC Hardware Diagnostics utility to determine whether your computer hardware is running properly. The three versions are HP PC Hardware Diagnostics Windows, HP PC Hardware Diagnostics UEFI (Unified Extensible Firmware Interface), and (for select products only) Remote HP PC Hardware Diagnostics UEFI, a firmware feature.

Using HP PC Hardware Diagnostics Windows (select products only)

HP PC Hardware Diagnostics Windows is a Windows-based utility that allows you to run diagnostic tests to determine whether the computer hardware is functioning properly. The tool runs within the Windows operating system to diagnose hardware failures.

If HP PC Hardware Diagnostics Windows is not installed on your computer, you must download and install it. To download HP PC Hardware Diagnostics Windows, see Downloading HP PC Hardware Diagnostics Windows on page 110.

Using an HP PC Hardware Diagnostics Windows hardware failure ID code

When HP PC Hardware Diagnostics Windows detects a failure that requires hardware replacement, a 24-digit failure ID code is generated for select component tests. For interactive tests, such as keyboard, mouse, or audio and video palette, you must perform troubleshooting steps before you can receive a failure ID.

You have several options after you receive a failure ID:

- Select **Next** to open the Event Automation Service (EAS) page, where you can log the case.
- Scan the QR code with your mobile device, which takes you to the EAS page, where you can log the case.
- Select the box next to the 24-digit failure ID to copy your failure code and send it to support.

Accessing HP PC Hardware Diagnostics Windows

After HP PC Hardware Diagnostics Windows is installed, you can access it from HP Support Assistant or the Start menu.

Accessing HP PC Hardware Diagnostics Windows from HP Support Assistant (select products only)

After HP PC Hardware Diagnostics Windows is installed, follow these steps to access it from HP Support Assistant.

1. Complete one of the following tasks:
   - Select the **Search** icon in the taskbar, type `support` in the search box, and then select the **HP Support Assistant** app.
   - Select the question mark icon in the taskbar.

2. Select **Fixes & Diagnostics**.
3. Select **Run hardware diagnostics**, and then select **Launch**.
4. When the tool opens, select the type of diagnostic test that you want to run, and then follow the on-screen instructions.

NOTE: To stop a diagnostic test, select **Cancel**.

Accessing HP PC Hardware Diagnostics Windows from the Start menu (select products only)

After HP PC Hardware Diagnostics Windows is installed, follow these steps to access it from the Start menu.

1. Select the **Start** button, and then select **All apps**.
2. Select **HP PC Hardware Diagnostics Windows**.
3. When the tool opens, select the type of diagnostic test that you want to run, and then follow the on-screen instructions.

NOTE: To stop a diagnostic test, select **Cancel**.

Downloading HP PC Hardware Diagnostics Windows

The HP PC Hardware Diagnostics Windows downloading instructions are provided in English only. You must use a Windows computer to download this tool because only .exe files are provided.

Downloading the latest HP PC Hardware Diagnostics Windows version from HP

To download HP PC Hardware Diagnostics Windows from HP, follow these steps.

1. Go to http://www.hp.com/go/techcenter/pcdiags. The HP PC Diagnostics home page is displayed.
2. Select **Diagnose PC Hardware issues in Windows**, scroll down to the expanded window that appears, and then select **Download**.
3. A pop-up that asks what you want to do with the file opens. Select **Open** or **Save As**. The latest version of the diagnostics tool opens or downloads to the selected location.

Downloading the HP PC Hardware Diagnostics Windows from the Microsoft Store

You can download the HP PC Hardware Diagnostics Windows from the Microsoft Store.

1. Select the Microsoft Store app on your desktop or select the **Search** icon in the taskbar, and then type `Microsoft Store` in the search box.
2. Type `HP PC Hardware Diagnostics Windows` in the **Microsoft Store** search box.
3. Follow the on-screen directions.

The tool downloads to the selected location.

Downloading HP Hardware Diagnostics Windows by product name or number (select products only)

You can download HP PC Hardware Diagnostics Windows by product name or number.

NOTE: For some products, you might have to download the software to a USB flash drive by using the product name or number.

1. Go to http://www.hp.com/support.
2. Select **Software and Drivers**, select your type of product, and then enter the product name or number in the search box that is displayed.
3. In the **Diagnostics** section, select **Download**, and then follow the on-screen instructions to select the specific Windows diagnostics version to be downloaded to your computer or USB flash drive.

The tool downloads to the selected location.

Installing HP PC Hardware Diagnostics Windows

To install HP PC Hardware Diagnostics Windows, navigate to the folder on your computer or the USB flash drive where the .exe file downloaded, double-click the .exe file, and then follow the on-screen instructions.

Using HP PC Hardware Diagnostics UEFI

HP PC Hardware Diagnostics Unified Extensible Firmware Interface (UEFI) allows you to run diagnostic tests to determine whether the computer hardware is functioning properly. The tool runs outside the operating system so that it can isolate hardware failures from issues that are caused by the operating system or other software components.

NOTE: For some products, you must use a Windows computer and a USB flash drive to download and create the HP UEFI support environment because only .exe files are provided. For more information, see Downloading HP PC Hardware Diagnostics UEFI to a USB flash drive on page 112.

If your PC does not start in Windows, you can use HP PC Hardware Diagnostics UEFI to diagnose hardware issues.

Using an HP PC Hardware Diagnostics UEFI hardware failure ID code

When HP PC Hardware Diagnostics UEFI detects a failure that requires hardware replacement, a 24-digit failure ID code is generated.

For assistance in solving the problem, complete one of these tasks:

- Select **Contact HP**, accept the HP privacy disclaimer, and then use a mobile device to scan the failure ID code that appears on the next screen. The HP Customer Support - Service Center page appears with your failure ID and product number automatically filled in. Follow the on-screen instructions.
- Contact support, and provide the failure ID code.

Starting HP PC Hardware Diagnostics UEFI

To start HP PC Hardware Diagnostics UEFI, follow this procedure.

1. Turn on or restart the computer, and quickly press esc.
2. Press f2.

   The BIOS searches three places for the diagnostic tools, in the following order:

   a. Connected USB flash drive

   NOTE: To download the HP PC Hardware Diagnostics UEFI tool to a USB flash drive, see Downloading the latest HP PC Hardware Diagnostics UEFI version on page 113.

   b. Hard drive

   c. BIOS

3. When the diagnostic tool opens, select the type of diagnostic test that you want to run, and then follow the on-screen instructions.

Starting HP PC Hardware Diagnostics UEFI through HP Hotkey Support software (select products only)

This section describes how to start HP PC Hardware Diagnostics UEFI through HP Hotkey Support software.

NOTE: You must disable Fast Boot to access HP PC Hardware Diagnostics UEFI from the HP System Information application.

To disable Fast Boot:

1. Turn on or restart the computer, and when the HP logo appears, press f10 to enter Computer Setup.
2. Select **Advanced**, and then select **Boot Options**.
3. Clear **Fast Boot**.
4. Select **Save Changes and Exit**, and then select **Yes**.

To start HP PC Hardware Diagnostics UEFI through HP Hotkey Support software, follow this procedure:

1. From the **Start** menu, open the HP System Information Application or press fn+esc.
2. In HP System Information screen, select **Run System Diagnostics**, select **Yes** to run the application, and then select **Restart**.

IMPORTANT: To prevent loss of data, save your work in all open apps before restarting your computer.

NOTE: When the restart is complete, the computer opens the HP PC Hardware Diagnostics UEFI Application. Proceed with the troubleshooting tests.

Downloading HP PC Hardware Diagnostics UEFI to a USB flash drive

Downloading HP PC Hardware Diagnostics UEFI to a USB flash drive can be useful in some situations.

- HP PC Hardware Diagnostics UEFI is not included in the preinstallation image.
- HP PC Hardware Diagnostics UEFI is not included in the HP Tool partition.

- The hard drive is damaged.

NOTE: The HP PC Hardware Diagnostics UEFI downloading instructions are provided in English only, and you must use a Windows computer to download and create the HP UEFI support environment because only `.exe` files are provided.

Downloading the latest HP PC Hardware Diagnostics UEFI version

To download the latest HP PC Hardware Diagnostics UEFI version to a USB flash drive, follow these steps.

1. Go to http://www.hp.com/go/techcenter/pcdiags. The HP PC Diagnostics home page is displayed.
2. Select **Diagnose PC Hardware Issues outside of the OS**, scroll down to the expanded window that appears, and then select **Download**.
3. A pop-up that asks what you want to do with the file opens. Select **Open** or **Save As**. The latest version of the diagnostics tool opens or downloads to the selected location.

Downloading HP PC Hardware Diagnostics UEFI by product name or number (select products only)

You can download HP PC Hardware Diagnostics UEFI by product name or number (select products only) to a USB flash drive.

NOTE: For some products, you might have to download the software to a USB flash drive by using the product name or number.

1. Go to http://www.hp.com/support.
2. Enter the product name or number, select your computer, and then select your operating system.
3. In the **Diagnostics** section, follow the on-screen instructions to select and download the specific UEFI Diagnostics version for your computer.

Using Remote HP PC Hardware Diagnostics UEFI settings (select products only)

Remote HP PC Hardware Diagnostics UEFI is a firmware (BIOS) feature that downloads HP PC Hardware Diagnostics UEFI to your computer. It can then run the diagnostics on your computer, and it might upload results to a preconfigured server.

For more information about Remote HP PC Hardware Diagnostics UEFI, go to http://www.hp.com/go/techcenter/pcdiags, select **Diagnose Other Potential Issues**, scroll down to **Remote PC Hardware Diagnostics UEFI**, and then select **Learn More**.

Downloading Remote HP PC Hardware Diagnostics UEFI

Remote HP PC Hardware Diagnostics UEFI is also available as a SoftPaq that you can download to a server.

Downloading the latest Remote HP PC Hardware Diagnostics UEFI version

You can download the latest Remote HP PC Hardware Diagnostics UEFI version to a USB flash drive.

1. Go to http://www.hp.com/go/techcenter/pcdiags. The HP PC Diagnostics home page is displayed.

2. Select **Diagnose PC Hardware Issues outside of the OS**, scroll down to the expanded window that appears, and then select **Download**.

3. A pop-up that asks what you want to do with the file opens. Select **Open** or **Save As**. The latest version of the diagnostics tool opens or downloads to the selected location.

Downloading Remote HP PC Hardware Diagnostics UEFI by product name or number

You can download Remote HP PC Hardware Diagnostics UEFI by product name or number.

NOTE: For some products, you might have to download the software by using the product name or number.

1. Go to http://www.hp.com/support.

2. Select **Software and Drivers**, select your type of product, enter the product name or number in the search box that is displayed, select your computer, and then select your operating system.

3. In the **Diagnostics** section, follow the on-screen instructions to select and download the **Remote UEFI** version for the product.

Customizing Remote HP PC Hardware Diagnostics UEFI settings

Using the Remote HP PC Hardware Diagnostics setting in Computer Setup (BIOS), you can perform several customizations.

- Set a schedule for running diagnostics unattended. You can also start diagnostics immediately in interactive mode by selecting **Execute Remote HP PC Hardware Diagnostics UEFI**.
- Set the location for downloading the diagnostic tools. This feature provides access to the tools from the HP website or from a server that has been preconfigured for use. Your computer does not require the traditional local storage, such as a hard drive or USB flash drive, to run remote diagnostics.
- Set a location for storing the test results. You can also set the user name and password that you use for uploads.
- Display status information about the diagnostics run previously.

To customize Remote HP PC Hardware Diagnostics UEFI settings, follow these steps:

1. Turn on or restart the computer, and when the HP logo appears, press f10 to enter Computer Setup.

2. Select **Advanced**, and then select **Settings**.

3. Make your customization selections.

4. Select **Main**, then select **Save Changes and Exit** to save your settings.

Your changes take effect when the computer restarts.

14 Power cord set requirements

The power supplies on some computers have external power switches.

The voltage select switch feature on the computer permits it to operate from any line voltage of 100 V AC to 120 V AC or 220 V AC to 240 V AC. Power supplies on those computers that do not have external power switches are equipped with internal switches that sense the incoming voltage and automatically switch to the proper voltage.

The power cord set received with the computer meets the requirements for use in the country where you purchased the equipment.

Power cord sets for use in other countries must meet the requirements of the country where you use the computer.

General requirements

These requirements are applicable to all countries.

1. The power cord must be approved by an acceptable accredited agency responsible for evaluation in the country where the power cord set will be installed.
2. The power cord set must have a minimum current capacity of 10 A (7 A Japan only) and a nominal voltage rating of 125 V AC or 250 V AC, as required by each country's power system.
3. The diameter of the wire must be a minimum of 0.75 mm^2 or 18 AWG, and the length of the cord must be between 1.8 m (6 ft) and 3.6 m (12 ft).

The power cord should be routed so that it is not likely to be walked on or pinched by items placed upon it or against it. Particular attention should be paid to the plug, electrical outlet, and the point where the cord exits from the product.

WARNING! Do not operate this product with a damaged power cord set. If the power cord set is damaged in any manner, replace it immediately.

Japanese power cord requirements

For use in Japan, use only the power cord received with this product.

IMPORTANT: Do not use the power cord received with this product on any other products.

Country-specific requirements

This information provides additional requirements specific to a country.

Table 14-1 Power cord country-specific requirements

Country	Accrediting Agency	Country	Accrediting Agency
Australia (1)	EANSW	Italy (1)	IMQ
Austria (1)	OVE	Japan (3)	METI
Belgium (1)	CEBC	Norway (1)	NEMKO
Canada (2)	CSA	Sweden (1)	SEMKO
Denmark (1)	DEMKO	Switzerland (1)	SEV
Finland (1)	SETI	United Kingdom (1)	BSI
France (1)	UTE	United States (2)	UL
Germany (1)	VDE		

1. The flexible cord must be Type HO5VV-F, 3-conductor, 0.75 mm^2 conductor size. Power cord set fittings (appliance coupler and plug) must bear the certification mark of the agency responsible for evaluation in the country where it will be used.
2. The flexible cord must be Type SVT or equivalent, No. 18 AWG, 3 conductor. The plug must be a 2-pole grounding type with a NEMA 5-15P (15 A, 125 V) or NEMA 6-15P (15 A, 250 V) configuration.
3. Appliance coupler, flexible cord, and plug must bear a T mark and registration number in accordance with the Japanese Dentori Law. Flexible cord must be Type VCT or VCTF, 3-conductor, 0.75 mm^2 conductor size. Plug must be a 2-pole grounding type with a Japanese Industrial Standard C8303 (7 A, 125 V) configuration.

15 Specifications

This section provides specifications for your computer.

Table 15-1 **Specifications**

	Metric	U.S.
Dimensions		
Height	34.2 cm	1.35 in
Width	17.7 cm	6.97 in
Depth	18.1 cm	7.13 in
Approximate weight	1.35 kg	2.97 lb
Temperature range		
Operating	10°C to 50°C	50°F to 122°F
Nonoperating	-20°C to 65°C	-4°F to 149°F
Maximum altitude (unpressurized)		
Operating	5,000 m	16,404 ft
Nonoperating	15,240 m	50,000 ft
Relative humidity (noncondensing)		
Operating	10% to 95%	
Nonoperating (38.7°C max wet bulb)	0% to 95%	
Power supply		
Operating voltage range	90 V AC to 264 V AC	
Rated voltage range[1]	100 V AC to 240 V AC	
Rated line frequency	50 Hz to 60 Hz	
Operating line frequency	47 Hz to 63 Hz	
External power supply	90 W	
	100 W	
	120 W	
	150 W	
	180 W	

[1] This system uses an active power factor-corrected power supply. This allows the system to pass the CE mark requirements for use in the countries of the European Union. The active power factor-corrected power supply also has the added benefit of not requiring an input-voltage range select switch.

NOTE: Operating temperature is derated 1.0°C per 300 m (1000 ft) to 3000 m (10,000 ft) above sea level; no direct sustained sunlight. Maximum rate of change is 10°C/hour. The upper limit might be limited by the type and number of options installed.

Index

A

access panel
  locked 54
  removal and replacement 29
  spare part number 29
accessory padlock loop, identifying 3, 8
accessory security cable loop, identifying 3, 8
Advanced menu, Computer Setup 79
ambient sensor
  illustrated 14
  removal and replacement 30
  spare part number 30
antenna
  illustrated 12
antennas
  removal and replacement 51
  spare part number 51
audible codes 96
audio problems 58

B

backup, creating 101
backups 101
battery
  disposal 19, 25, 27
battery replacement 41
beep codes 96
blinking lights 96
boot order, changing 103
booting options
  Full Boot 89
  Quick Boot 89

C

cable management 19
changing a Power-On password 99
changing a Setup password 99
cleaning
  computer 19, 22, 24
  mouse 19, 22, 25
  safety precautions 19, 22
cleaning your computer
  disinfecting 23
  removing dirt and debris 23
CMOS
  clearing and resetting 99
computer cleaning 19, 22, 24
computer major components 11
Computer Setup
  access problem 54
  Advanced menu 79
  Main menu 69
  Security menu 73
Computer Setup Utility 68
country power cord set requirements 115
Customer Support 53

D

deleting a Power-On password 99
deleting a Setup password 99
dust filter
  removal and replacement 29
  spare part number 29

E

electrostatic discharge (ESD) 19
  preventing damage 19, 20
error
  codes 89, 96
error messages 89

F

F10 Setup 68
  access problem 54
fan
  removal and replacement 32, 33
  spare part number 32, 33
Fan
  illustrated 13
Fan (second)
  illustrated 13
flash drive problems 65
flex I/O connector board
  removal and replacement 44
flex I/O connector board (board-to-board)
  removal and replacement 48
front bezel
  removal and replacement 29
  spare part number 29
front panel components 1, 6

G

general problems 54
grounding methods 19, 20

H

hard drive
  proper handling 19, 25, 26
hardware installation problems 61
HDMI port, identifying 3, 8
heat sink
  illustrated 14
  removal and replacement 46
  spare part number 46
helpful hints 54
HP PC Hardware Diagnostics UEFI
  downloading 112
  failure ID code 111
  HP Hotkey Support software 112
  starting 111, 112
  using 111
HP PC Hardware Diagnostics Windows
  accessing 109, 110
  downloading 110
  failure ID code 109
  installing 111
  using 109
HP Recovery media recovery 102
HP Sure Recover 103
HP Sure Start 104, 108

I

illustrated parts catalog 11
installing
  battery 41
  memory modules 38
internet access problems 66

K

keyboard
  cleaning 19, 22, 24
keyboard problems 60

L

lights
  blinking PS/2 keyboard 96

M

Main menu, Computer Setup 69
memory
  nonvolatile 104
  problems 64
  socket population 38
  volatile 104
memory modules
  removal and replacement 38
  spare part number 38
miscellaneous parts 14
mouse
  cleaning 19, 22, 25
  problems 60

N

network problems 62
nonvolatile memory 104
numeric error codes 89

O

operating guidelines 19, 22
overheating, prevention 19, 22

P

password
  Power-On 99
  security 99
  Setup 99
ports
  HDMI 3, 8
  USB 10 Gbps port 3, 8
  USB Type-C with HP Sleep and Charge 3, 8
POST error messages 89
power cord set requirements
  country specific 115
power problems 57
power supply
  operating voltage range 117
Power-On password 99
printer problems 59
problems
  audio 58
  Computer Setup 54
  F10 Setup 54
  flash drive 65
  general 54
  hardware installation 61
  internet access 66
  keyboard 60
  memory 64
  mouse 60
  network 62
  power 57
  printer 59
  software 67
Processor
  illustrated 11
product ID location 4, 9

R

rear panel components 2, 7
recovery 101, 102
  discs 102
  media 102
  USB flash drive 102
recovery media 101
  creating using HP Cloud Recovery Download Tool 101
  creating using Windows tools 101
Remote HP PC Hardware Diagnostics UEFI settings
  customizing 114
  using 113
removal and replacement
  access panel 29
  ambient sensor 30
  antennas 51
  dust filter 29
  fan 32, 33
  flex I/O connector board 44
  flex I/O connector board (board-to-board) 48
  front bezel 29
  heat sink 46
  memory modules 38
  procedures 28, 46
  speaker 31
  SSD 35
  system board 49
  WLAN module 36
removing
  battery 41
removing personal data from volatile system memory 104
restoring 101
restoring and recovery methods 102

S

safety precautions
  cleaning 19, 22
screws, correct size 19, 25, 26
Security menu, Computer Setup 73
serial number location 4, 9
service considerations 19, 25
Setup password 99
software
  problems 67
  servicing computer 19, 25
spare part number
  access panel 29
  ambient sensor 30
  antennas 51
  dust filter 29
  fan 32, 33
  front bezel 29
  heat sink 46
  memory modules 38
  speaker 31
  SSD 35
  system board 49
  WLAN module 36
speaker
  illustrated 14
  removal and replacement 31
  spare part number 31
specifications
  computer 117
SSD
  removal and replacement 35
  spare part number 35
static electricity 19
system board
  removal and replacement 49
  spare part number 49
system memory, removing personal data from volatile 104
system restore 102
system restore point, creating 101

T

temperature control 19, 22
tools, servicing 19, 25

Torx T15 screwdriver 19, 25
tower conversion 4, 9
troubleshooting without
diagnostics 53

U

USB 10 Gbps port, identifying 3, 8
USB Type-C port with HP Sleep and
Charge, identifying 3, 8
using Computer Setup
Utilities 68

V

ventilation, proper 19, 22

W

Windows
backup 101
recovery media 101
system restore point 101
Windows tools, using 101
WLAN
illustrated 13
WLAN module
removal and replacement 36
spare part number 36