Getac

UX10 Series

USER MANUAL

Rugged Mobile Computing Solutions

May 2026

Trademarks
The Bluetooth® word mark and logos are registered trademarks owned by Bluetooth SIG, Inc.
Thunderbolt is a trademark of Intel Corporation or its subsidiaries.
All other brand and product names are trademarks or registered trademarks of their respective companies.

Disclaimer
Specifications and manuals are subject to change without notice. Getac assumes no liability for damage incurred directly or indirectly from errors, omissions, or discrepancies between the device and the manuals.

Note
For the latest version of the manual, please visit the Getac website at www.getac.com.

Table of Contents

Chapter 1 Getting Started 1

Getting the Tablet PC Running 2
- Unpacking 2
- Installing the Micro-SIM Card (Optional) 3
- Installing the Battery Pack 4
- Installing the Stylus Tether 5
- Connecting to AC Power 6
- Turning On and Off the Tablet PC 7

Taking a Look at the Tablet PC 8
- Front Components 8
- Rear Components 11
- Right-Side Components 12
- Left-Side Components 13
- Top Components 14
- Bottom Components 15

Chapter 2 Operating Your Tablet PC 16

Navigating on the Screen 17
- Using the Touchscreen 17
- Using the Dual Mode Display (Optional) 20

Using Network and Wireless Connections 21
- Using the LAN (Optional) 21
- Using the WLAN 21
- Using the Bluetooth Feature 22
- Using the WWAN Feature (Optional) 23

Chapter 3 Managing Power 25

AC Adapter (Optional) 26
Battery Pack 27
- Charging the Battery Pack 27
- Initializing the Battery Pack 28
- Checking the Battery Level 28
- Battery Low Signals and Actions 29

Replacing the Battery Pack 30
Hot Swapping the Battery Pack (Optional) 32
Power-Saving Tips 34

Chapter 4 Using Options and Peripherals 35
Using the Fingerprint Scanner (Optional) 36
Enrolling a Fingerprint 36
Fingerprint Login 37
Using the Barcode Scanner (Optional) 38
Notes 39
Connecting Peripheral Devices 40
Connecting a USB Device 40
Connecting a Thunderbolt™ Device 40
Connecting a Display Monitor 41
Connecting a Serial Device (Optional) 42
Using Various Card Readers 43
Using MicroSD Cards (Optional) 43
Using Smart Cards (Optional) 44
Using the RFID Reader/Writer (Optional) 45

Chapter 5 Using BIOS Setup 46
When and How to Use 47
Menu Descriptions 48
Information Menu 48
Main Menu 48
Advanced Menu 48
Security Menu 50
Boot Menu 51
Exit Menu 52

Chapter 6 Using Getac Software 53
OSD Control Panel 54
G-Manager 55
G-Camera (Optional) 56

Chapter 7 Care and Maintenance 57
Protecting the Tablet PC 58
Using an Anti-Virus Strategy 58
Using the Cable Lock 58
Taking Care of the Tablet PC 59
Location Guidelines 59
General Guidelines 59
Cleaning Guidelines 60

Battery Pack Guidelines 60
Touchscreen Guidelines 61
When Traveling 63

Chapter 8 Troubleshooting 64
Preliminary Checklist 65
Solving Common Problems 66
Battery Problems 66
Bluetooth Problems 66
Display Problems 67
Fingerprint Scanner Problems 67
Hardware Device Problems 68
Power Management Problems 68
Software Problems 69
Sound Problems 69
Startup Problems 69
WLAN Problems 70
Other Problems 71
Resetting the Tablet PC 72
System Recovery 73
Using Windows RE 73
Using Recovery Partition 74
Using the Driver Disc (Optional) 75

Appendix A Specifications 76

Appendix B Regulatory Information 79
Safety Notices 80
About the Battery 80
About the AC Adapter 83
Heat Related Concerns 84
North America 85
USA 85
Canada 88
User Notification of Take-back Service 90
Europe Marking and Compliance Notices 91
Statements of Compliance 91
Restriction of Hazardous Substances (RoHS) Directive 93
Declaration of Conformity 93
About USB Power Delivery 93
ENERGY STAR 94
About Battery and External Enclosure Replacement 95

Battery 95
External Enclosure..... 95
Manufacture Date and Labels 96

Chapter 1

Getting Started

This chapter first tells you step by step how to get the Tablet PC up and running. Then, you will find a section briefly introducing the external components of the Tablet PC.

CAUTION: Safety instructions are provided in related sections throughout the *User Manual*. Please read the manual and any accompanying document(s) before starting to use the product.

NOTE: Depending on the specific model you purchased, the color and look of your model may not exactly match the graphics shown in this document.

Getting the Tablet PC Running

Unpacking

After unpacking the shipping carton, you should find these items.

Tablet PC
Documents
Battery pack 
Power adapter and power cord (optional) 
Stylus and tether (optional) 
Driver disc (optional)

Depending on your purchase, you may have additional items.

Inspect all the items. If any item is damaged or missing, notify your dealer immediately.

NOTE: To purchase the power adapter kit for your model, contact a Getac authorized distributor. For contact information, check the below website.
https://www.getac.com/en/contact/

Installing the Micro-SIM Card (Optional)

NOTE: The micro-SIM card socket is located below the battery pack. If you have already installed the battery pack, remove it in order to install the micro-SIM card.

CAUTION: Before installing the micro-SIM card, make sure the power adapter is not connected and the power is not turned on.

1. Locate the micro-SIM card socket. Remove one screw to detach the small metal plate that covers the micro-SIM card socket.



2. Slide the socket cover toward the unlocked direction ( ) and open the cover.

3. Noting the orientation, put down the micro-SIM card on the socket.

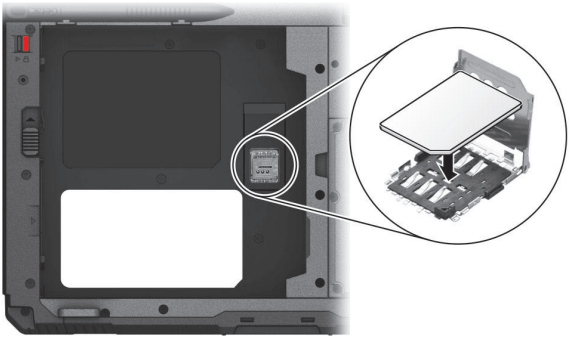

4. Close the cover and slide it back to the locked position ( ).

5. Replace the metal plate and secure it in place with the screw previously removed.

Installing the Battery Pack

1. With the battery pack correctly oriented, attach its connector side to the battery compartment at an angle (❶) and then press down the other side (❷). The battery release latch should automatically engage.

NOTE: If you have the high-capacity battery model, the battery pack looks different from the one shown here. The removal and installation method is the same.



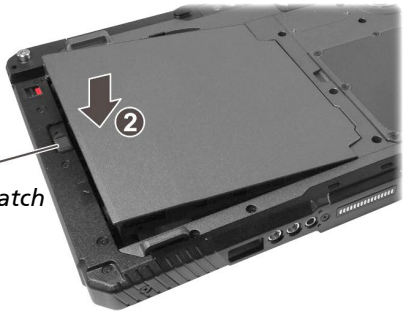

2. Slide the security lock to the locked position (🔒).

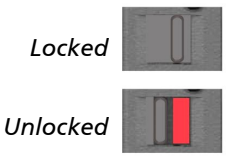



CAUTION: Make sure the lock is correctly locked, not revealing the underneath red part.

Installing the Stylus Tether

A stylus and tether can be purchased from Getac.

1. Insert one of the tether's loop ends through the hole of the stylus (as indicated by ❶ below). Then, insert the other end through the first loop (as indicated by ❷ below) and pull it tight.

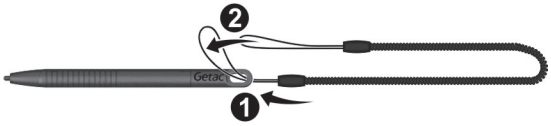

2. Insert the other loop end to the tether hole on the Tablet PC (as indicated by ❶ below). Then, insert the stylus end through the loop (as indicated by ❷ below) and pull it tight.

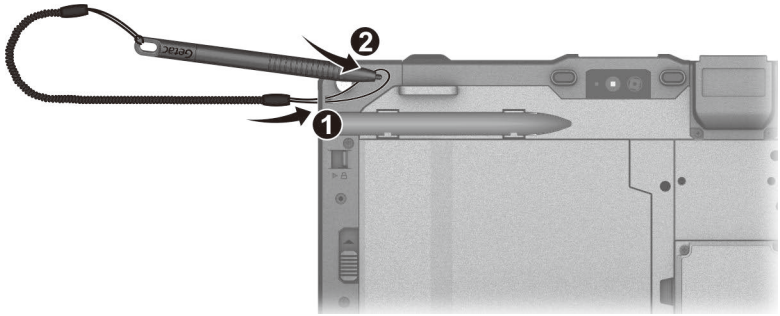

NOTE: If the hard handle is installed, attach the tether to the D-ring on the hard handle.

Connecting to AC Power

CAUTION: It is recommended to use a Getac adapter for optimal performance. Using other adapters may not guarantee system stability or sufficient power delivery under heavy workloads, potentially resulting in system malfunction or safety hazards.

NOTE: The battery pack is shipped to you in power saving mode that protects it from charging/discharging. It will get out of the mode to be ready for use when you install the battery pack and connect AC power to the Tablet PC for the very first time.

You must use AC power when starting up the Tablet PC for the very first time.

1. Plug the DC cord of the AC adapter to the power connector of the Tablet PC (❶).
2. Plug the female end of the AC power cord to the AC adapter and the male end to an electrical outlet (❷).

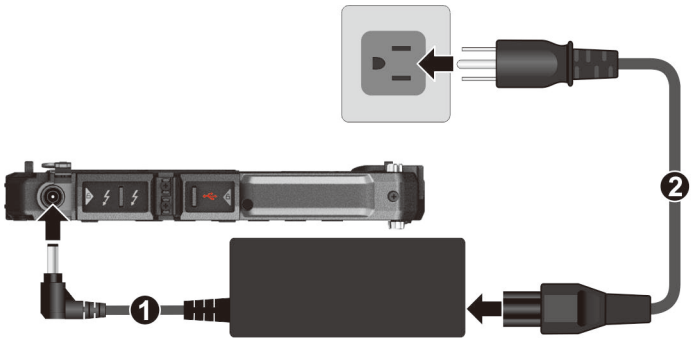

NOTE: The power cord type varies with countries. The look of your power cord and electrical outlet might not match the one shown in this document.

3. Power is being supplied from the electrical outlet to the AC adapter and onto your Tablet PC. Now, you are ready to turn on the Tablet PC.

Turning On and Off the Tablet PC

Turning On

Press the power button (⏻). The Windows operating system should start.

NOTE: Tapping the screen during startup may invoke a pre-boot menu (unless the default settings have been changed). If the menu appears, simply select **Continue**.

Turning Off

When you finish a working session, you can stop the system by turning off the power or leaving it in Sleep or Hibernation mode.

To...	Do this...
Power off (Shutdown)	Tap **Start** → ⏻ **Power** → **Shut down**.
Sleep	Press the power button.* -or- Tap **Start** → ⏻ **Power** → **Sleep**.
Hibernate	By default, this option is not shown in the Start menu. If you want to use the feature, set up accordingly in Windows settings.

* "Sleep" is the default setting of the power button. You may change what the power button does in Windows settings.

Taking a Look at the Tablet PC

CAUTION: You need to open the protective covers to access the connectors. When not using a connector, make sure to close the cover completely for water- and dust-proof integrity. (Engage the locking mechanism if existing.)

Front Components

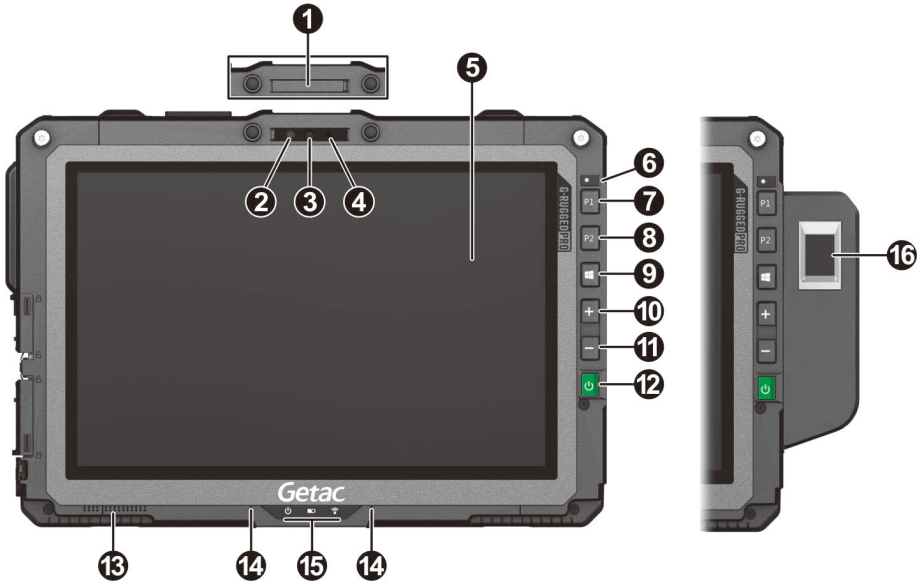

Ref	Component	Description
❶	**Camera cover** (optional)	Covers the camera lens. Slide the cover to open or close it. The cover provides privacy protection.
❷	**Camera lens** (optional)	Allows you to use the camera function.
❸	**IR sensor**	Detects the infrared energy of objects to form an image. The sensor flashes red light when in use. The near infrared (IR) imaging capability allows you to use Windows Hello face authentication.

Ref	Component	Description	
❹	**Camera indicator** (optional)	Lights up when the camera lens beside it is in use.	
❺	**Touchscreen**	Displays and receives information for the Tablet PC.	
❻	**Light sensor** (optional)	Senses the ambient light for automatic adjustments of the display backlight.	
❼	**P1 button**	Opens or closes the OSD Control Panel.	
		When pressed longer: Serves as the **Ctrl+Alt+Del** keyboard keys.	
❽	**P2 button**	**Trigger**	Serves as the trigger button for the barcode scanner if your model has the option.
		Camera	Starts the G-Camera application This is the default function for models without the barcode scanner.
❾	**Windows logo button**	Opens or closes the Start menu.	
❿	**Plus button**	Increases the sound volume.	
⓫	**Minus button**	Decreases the sound volume.	
⓬	**Power button**	Turns the power on or off. (The default "off" state is "Sleep mode.")	
⓭	**Speaker**	Sends out sound and voice from your Tablet PC.	
⓮	**Microphone**	Receives sound and voice to record voice.	
⓯	**Indicators**		
	Power	Lights blue when the power is on.	
		Blinks blue when the system is in Sleep mode.	
	Battery	Lights amber when the battery is being charged.	
		Lights green when battery charging is completed.	
		Blinks green to indicate the battery's built-in high temperature protection mechanism is activated. **CAUTION:** Do not remove the battery during this period.	

Ref	Component	Description
		Blinks red (once per second) when the battery's capacity is below 10%.
		Blinks red rapidly (once per 0.5 second) when there is a thermal protection problem. Ask for repair service in case this happens.
		Blinks amber when the battery charging is in an abnormal state. Replace the battery in case this happens.
	Airplane mode	Lights blue when the RF radio of any RF feature (WLAN/Bluetooth/WWAN) is on. If Airplane mode is switched on, the light turns off.
⓰	**Fingerprint scanner** (optional)	Serves as the fingerprint verification, preventing unauthorized access to your Tablet PC.

NOTE: The hardware buttons (except the power button) can be re-defined using G-Manager.

Rear Components

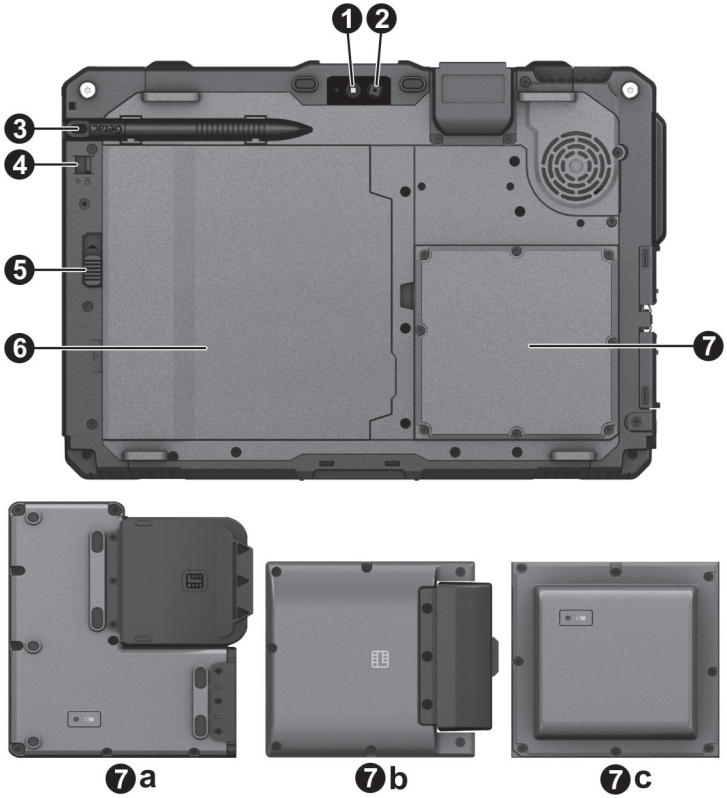

Ref	Component	Description
❶	**Flash** (optional)	Provides extra light when taking pictures.
❷	**Camera lens** (optional)	Allows you to use the camera function. When the camera lens is in use, the indicator beside it lights up.
❸	**Stylus holder**	Holds the stylus (optional).
❹	**Security lock**	Locks the battery release latch.
❺	**Battery release latch**	Releases the battery pack.

Ref	Component		Description
❻	**Battery pack**		Supplies power to your Tablet PC when external power is not connected. **NOTE:** If you have the high-capacity battery model, the battery pack looks different from the one shown here.
❼	Select models have one of the below components.		
	a	**Bridge battery and smart card reader module**	Provides enough extra power for the purpose of hot swapping the battery pack.
			Accepts a smart card for additional security feature.
	b	**Smart card reader module**	Accepts a smart card for additional security feature.
	c	**Bridge battery module**	Provides enough extra power for the purpose of hot swapping the battery pack.

Right-Side Components

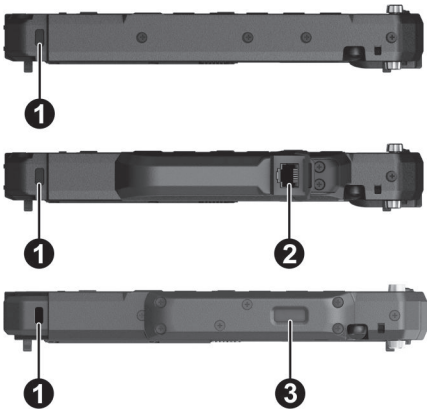

Ref	Component	Description
❶	**Kensington Security Slot**	Locks the Tablet PC to a stationary object for security.
❷	**RJ45 connector** (optional)	Connects the LAN cable.

Ref	Component	Description
❸	**Fingerprint scanner** (optional)	Serves as the fingerprint verification, preventing unauthorized access to your Tablet PC.

Left-Side Components

Slide the cover toward the unlocked position ( ) to open the cover.

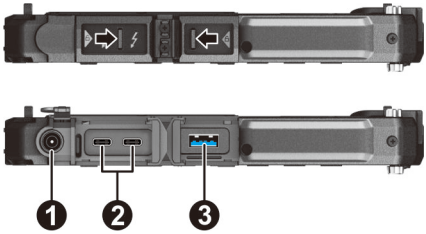

Ref	Component	Description
❶	**DC Power connector**	Connects the AC adapter. **CAUTION:** Use only the AC adapter supplied by Getac.
❷	**USB-C Thunderbolt™ 4 port**	Connects to devices that support Thunderbolt or USB-C connection.
❸	**USB 3.2 Gen 2 port**	Connects a USB device.

Top Components

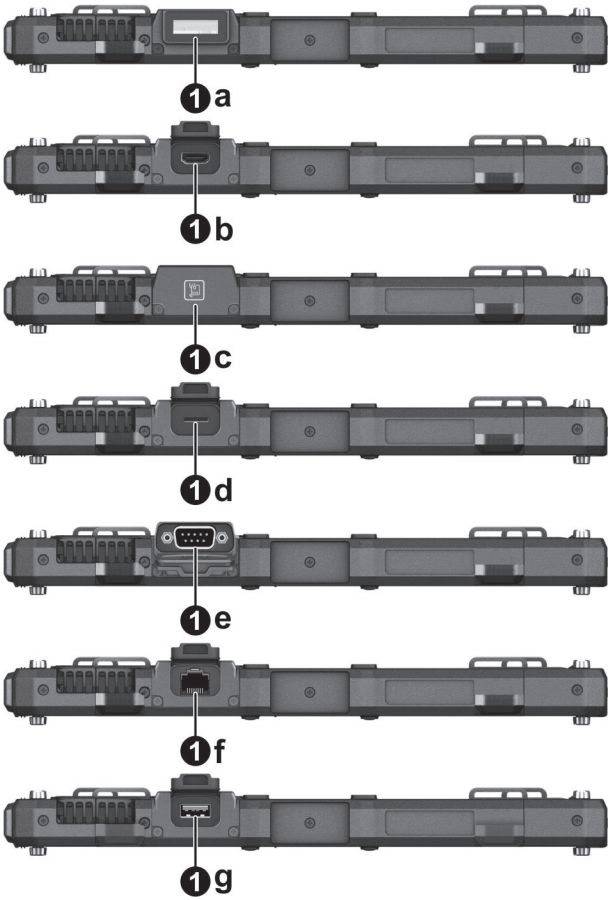

Ref	Component		Description
1	Select models have one of the below components.		
	a	**Barcode scanner lens**	Scans and reads barcodes.
	b	**HDMI connector**	Connects a HDMI monitor or TV set.
	c	**HF RFID antenna**	Reads data from HF RFID tags.

Ref	Component		Description
	d	**MicroSD card slot**	Accepts a microSD card for removable storage media.
	e	**RS-232 serial connector**	Connects a serial device.
	f	**RJ45 connector**	Connects the LAN cable.
	g	**USB 2.0 port**	Connects a USB device.

Bottom Components

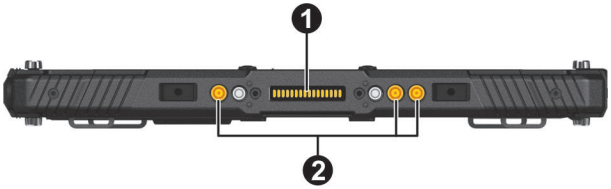

Ref	Component	Description
❶	**Docking connector**	Connects a proprietary dock such as the keyboard dock, office dock, and vehicle dock.
❷	**Tri antenna passthrough** (optional)	Connects to the docking station for using external GPS/WWAN/WLAN antenna.

Chapter 2

Operating Your Tablet PC

This chapter provides information about the use of the Tablet PC.

If you are new to computers, reading this chapter will help you learn the operating basics. If you are already a computer user, you may choose to read only the parts containing information unique to your Tablet PC.

CAUTION:

- Do not expose your skin to the product when operating it in a very hot or cold environment.
- The product can get uncomfortably warm when you use it in high temperatures. As a safety precaution in such a circumstance, do not place the product on your lap or touch it with your bare hands for extended periods of time. Prolonged body contact can cause discomfort and potentially a burn.
- When the product is placed flat on a table top for work, the back surface can get hot after long working hours. Take precautions if you need to carry the product around while it is hot to the touch. Depending on your model, a carrying handle or strap may be available as an option. You can use the handle or strap to carry the product.

Navigating on the Screen

NOTE: A protection film has been attached to the screen before shipment. The film is a consumable, which will be worn out by possible scratches. You can purchase a new one when replacement is required.

Using the Touchscreen

Your Tablet PC has a capacitive touchscreen, which responds to objects that have conductive properties, such as fingertips and a capacitive-tipped stylus (an option available from Getac).

You can change the touchscreen sensitivity settings to suit your scenario. Double-tap the **Touch Screen Mode** shortcut on Windows desktop to open the settings menu and select one of the options (as shown below).



Select this mode when liquids, such as raindrops, are falling on the screen and should be rejected as input. Works best with fingertips.

Has a higher sensitivity to allow use with gloves (referring to warm gloves or work gloves, not referring to touchscreen-capable gloves).

Enables simultaneous use with Getac stylus or finger touch. (You must use the stylus from Getac.)

NOTE:

- In high temperatures (above 60 °C / 140 °F), set the mode to **Finger** instead of **Glove** or **Stylus** mode.
- If liquid is spilled on the touchscreen causing a wet area, the area will stop responding to any inputs. For the area to function again, you must dry it.

The following table shows how you use the touchscreen to obtain equivalent mouse functions.

Term/Action	Equivalent Mouse Function
Tap: Touch the screen once.	Click/Point
Double-tap: Touch the screen twice rapidly.	Double-click
Tap and hold: Tap and hold until a popup menu appears.	Right-click
Drag: Hold the stylus (or finger) on the screen and drag across the screen until reaching your destination.	Drag

Using Multi-touch Gestures

You can interact with your computer by placing two fingers on the screen. The movement of the fingers across the screen creates "gestures," which send commands to the computer.

Here are the multi-touch gestures that you can use:

Gestures	Actions (◯ = finger down; ◌ = finger up)	Descriptions
Pan (Scroll)	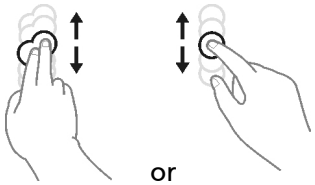 or Drag 1 or 2 fingers up or down.	Use panning to see another part of a page that has scroll bars.
Zoom (Pinch)	 Move two fingers apart/toward each other.	Use zooming to make an item (a photo for example) on the screen larger or smaller. The gesture works in applications that support mouse wheel zooming.

Gestures	Actions (◯ = finger down; ◌ = finger up)	Descriptions
Rotate	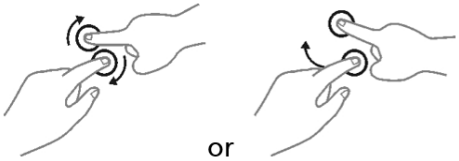 or Move two fingers in opposing directions. -or- Use one finger to pivot around another.	Use rotating to move a picture or other item on the screen in a circular direction (clockwise or counter-clockwise). The gesture works in applications that support the specific gesture.
Press and Tap	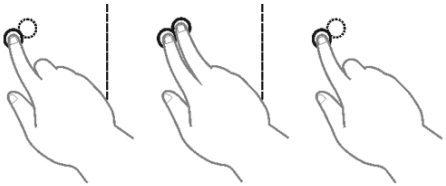 Press on target and tap using a second finger.	Use press and tap to access the shortcut menu.
Two-finger Tap	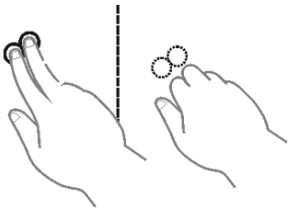 Tap two fingers at the same time (where the target is in the midpoint between the fingers).	The function is defined by applications that support the specific gesture.
Flicks	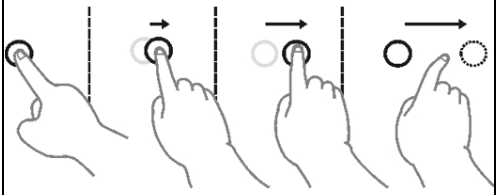 Make quick drag gestures in the desired direction.	Flick left or right to navigate back and forward in a browser and other applications. The gesture works in most applications that support back and forward.

Using the Dual Mode Display (Optional)

Dual mode display (if your model has the feature) incorporates both touchscreen and digitizer functions.

The display is set to Touchscreen mode by default. Touchscreen mode provides all the functionalities that an ordinary touchscreen has. When the Tablet PC receives signals from the digitizer pen, the display automatically switches to Digitizer mode.

You can move the cursor by bringing the digitizer pen close to the screen, without actually touching the screen's surface. The digitizer pen has a shortcut button that functions as the right-click of a mouse.



Using Network and Wireless Connections

Using the LAN (Optional)

Select models have the LAN module. To connect the network cable to the LAN module, connect one end of the LAN cable to the RJ45 connector on the Tablet PC and the other end to the network hub.

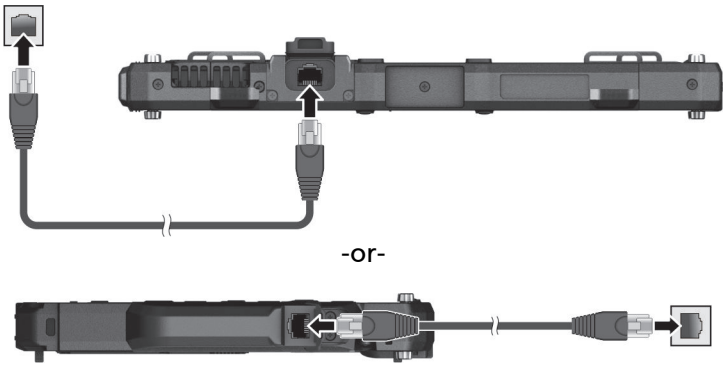

NOTE: The location of the connector depends on your model.

Using the WLAN

The WLAN (Wireless Local Area Network) module of your Tablet PC supports IEEE 802.11be.

Turning On/Off the WLAN Radio

To turn on the WLAN radio:

Select the network icon in the lower right of the taskbar. Then, select the **Wi-Fi** button.

To turn off the WLAN radio:

You can turn off the WLAN radio the same way you turn it on.

If you want to quickly turn off all wireless radio, simply switch on Airplane mode. You can control the Airplane mode using one of the below methods.

- Select the network icon in the lower right of the taskbar. Then, select the **Airplane mode** button.
- Use the **Airplane Mode** button in the OSD Control Panel.

Connecting to a WLAN Network

1. Make sure that the WLAN function is enabled (as described above).
2. Tap the network icon  in the lower right of the task bar.
3. In the list of available wireless networks, tap a network, and then tap **Connect**.
4. Some networks require a network security key or passphrase. To connect to one of those networks, ask your network administrator or Internet service provider (ISP) for the security key or passphrase.

For more information on setting a wireless network connection, refer to Windows online help.

Using the Bluetooth Feature

The Bluetooth technology allows short-range wireless communications between devices without requiring a cable connection. Data can be transmitted through walls, pockets and briefcases as long as two devices are within range.

Turning On/Off the Bluetooth Radio

To turn on the Bluetooth radio:

Go to **Settings → Bluetooth & devices**. Slide the **Bluetooth** switch to the **On** position.

To turn off the Bluetooth radio:

You can turn off the Bluetooth radio the same way you turn it on.

If you want to quickly turn off all wireless radio, simply switch on Airplane mode. You can control the Airplane mode using one of the below methods.

- Select the network icon in the lower right of the taskbar. Then, select the **Airplane mode** button.
- Use the **Airplane Mode** button in the OSD Control Panel.

Connecting to another Bluetooth Device

1. Make sure that the Bluetooth function is enabled (as described above).
2. Make sure that the target Bluetooth device is turned on, discoverable and within close range. (See the documentation that came with the Bluetooth device.)
3. Go to **Settings → Bluetooth & devices → Add device → Bluetooth**.
4. Select the device you want to connect from the search results.
5. Depending on the type of Bluetooth device that you want to connect to, you will need to enter the pertinent information.

For detailed information on using the Bluetooth feature, see Windows' online Help.

Using the WWAN Feature (Optional)

A WWAN (Wireless Wide Area Network) uses mobile telecommunication cellular network technologies to transfer data. The WWAN module of your Tablet PC supports dual SIM: physical SIM (4G LTE or 5G NR) and eSIM.

NOTE:

- Your model only supports data transmission. Voice transmission is not supported.
- For instructions on installing the micro-SIM card, see "Installing the Micro-SIM Card (Optional)" in Chapter 1.

Turning On/Off the WWAN Radio

To turn on the WWAN radio:

Select the network icon in the lower right of the taskbar. Then, select the **Cellular** button.

To turn off the WWAN radio:

You can turn off the WWAN radio the same way you turn it on.

If you want to quickly turn off all wireless radio, simply switch on Airplane mode. You can control the Airplane mode using one of the below methods.

- Select the network icon in the lower right of the taskbar. Then, select the **Airplane mode** button.
- Use the **Airplane Mode** button in the OSD Control Panel.

Setting up a WWAN Connection

Go to **Settings** → **Network & Internet** → **Cellular**. (For detailed information on cellular settings in Windows, see Microsoft Support website.)

Chapter 3

Managing Power

Your Tablet PC operates either on external AC power or on internal battery power.

This chapter tells you how you can effectively manage power. To maintain optimal battery performance, it is important that you use the battery in the proper way.

AC Adapter (Optional)

CAUTION:

- The AC adapter is designed for use with your Tablet PC only. Connecting the AC adapter to another device can damage the adapter.
- The AC power cord supplied with your Tablet PC is for use in the country where you purchased your Tablet PC. If you plan to go overseas with the Tablet PC, consult your dealer for the appropriate power cord.
- When you disconnect the AC adapter, disconnect from the electrical outlet first and then from the Tablet PC. A reverse procedure may damage the AC adapter or Tablet PC.
- When unplugging the connector, always hold the plug head. Never pull on the cord.

The AC adapter serves as a converter from AC (Alternating Current) to DC (Direct Current) power because your Tablet PC runs on DC power, but an electrical outlet usually provides AC power. It also charges the battery pack when connected to AC power.

The adapter operates on any voltage in the range of 100 V – 240 V AC.

Battery Pack

The battery pack is the internal power source for the Tablet PC. It is rechargeable using the power adapter.

Charging the Battery Pack

NOTE:

- Charging will not start if the battery's temperature is outside the allowed range, which is between 0 °C (32 °F) and 50 °C (122 °F). Once the battery's temperature meets the requirements, charging automatically resumes.
- During charging, do not disconnect the power adapter before the battery has been fully charged; otherwise, you will get a prematurely charged battery.
- The battery has an adaptive charging mechanism that identifies constant plugged-in operation and frequent use under high temperature. When a high temperature is detected, the system limits the maximum charge to 80%.
- The system automatically resumes charging to 100% once the high temperature scenario is no longer present. Users may also manually adjust full charging to 100% when needed.
- The battery level may automatically lessen due to the self-discharge process, even when the battery pack is fully charged. This happens no matter if the battery pack is installed in the Tablet PC.

To charge the battery pack, connect the power adapter to the Tablet PC and an electrical outlet. The Battery Indicator ( ) on the Tablet PC glows amber to indicate that charging is in progress. You are advised to keep the Tablet PC power off while the battery is being charged. When the battery is fully charged, the Battery Charge Indicator glows green.

The charging time is approximately 3 hours (for the standard battery pack) and 5.5 hours (for the high-capacity battery pack) when the power is off.

CAUTION: After the Tablet PC has been fully recharged, do not immediately disconnect and reconnect the power adapter to charge it again. Doing so may damage the battery.

Initializing the Battery Pack

You need to initialize a new battery pack before using it for the first time or when the actual operating time of a battery pack is much less than expected. Initializing is the process of fully charging, discharging, and then charging. It can take several hours.

The G-Manager program provides a tool called “Battery Recalibration” for the purpose. (See “G-Manager” in Chapter 6.)

Checking the Battery Level

NOTE: Any battery level indication is an estimated result. The actual operating time can be different from the estimated time, depending on how you are using the Tablet PC.

The operating time of a fully charged battery pack depends on how you are using the Tablet PC. When your applications often access peripherals, you will experience a shorter operating time.

By Operating System

You can check the approximate battery level using the battery meter function of the operating system. To read the battery level in Windows, click the battery icon on the taskbar.

By Gas Gauge

On the exterior side of the battery pack is a gas gauge for displaying the estimated battery charge.



When the battery pack is not installed in the Tablet PC and you want to know the battery charge, you can press the push-button to see the number of LEDs that light up. Each LED represents 20% charge.

Battery Low Signals and Actions

The battery icon changes appearance to display the current state of the battery.

Battery Icon	Battery Level	Description
	Discharging	The icon shows the charge remaining in 10-percent increments until the charge reaches the low-battery level.
	Low	The battery charge has reached the low-battery level.
	Critically low	The battery charge has reached the critical battery level. By default, Windows will display a notification and put your Tablet PC into Hibernation.

When the battery is low, the Tablet PC's Battery Indicator () also blinks red to alert you to take actions.

Always respond to low-battery by connecting the power adapter, placing your Tablet PC in Hibernation mode, or turning off the Tablet PC.

Replacing the Battery Pack

CAUTION:

- There is danger of explosion if the battery is incorrectly replaced. Replace the battery only with the Tablet PC manufacturer's battery packs. Discard used batteries according to the dealer's instructions.
- Do not attempt to disassemble the battery pack.
- A battery pack can get hot due to long working hours. Do not touch a hot battery pack with bare hands. After removing a battery pack, put it in a well-ventilated area.

NOTE:

- You can hot swap the battery pack if your model has the bridge battery.
- If you have the high-capacity battery model, the battery pack looks different from the one shown here. The removal/installation method is the same.

1. Skip this step if you are hot swapping the battery pack.

   Turn off the Tablet PC and disconnect the power adapter. After turning off the Tablet PC, allow a cool-down time of at least 5 minutes before removing the battery pack.

2. Slide the security lock of the battery release latch to the unlocked position (❶). Slide the battery release latch upwards (❷). The battery pack will slightly pop up. Remove the battery pack from its compartment (❸).

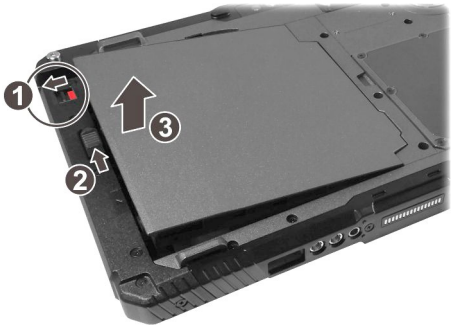

3. Fit another battery pack into place. With the battery pack correctly oriented, attach its connector side to the battery compartment at an angle (❶) and then press down the other side (❷). The battery release latch should automatically engage.



4. Slide the security lock to the locked position ( ).



CAUTION: Make sure the lock is correctly locked, not revealing the underneath red part.

Hot Swapping the Battery Pack (Optional)

You can hot swap the battery pack if your model has the bridge battery. “Hot swapping” means you can safely replace the battery pack without shutting down while your Tablet PC is running on battery power.

Hints and Reminders

See “Replacing the Battery Pack” for replacement instructions and note the following hints and reminders on hot swapping:

- Make sure the battery pack to be installed is charged.
- The appropriate temperature range for hot swapping the battery pack is between -15°C (5 °F) and 45 °C (113 °F).
- Check the Battery Hot Swapping Indicator after removing the battery pack. Hot swap the battery pack only when the indicator lights in green. A red light means there is not enough extra power for you to safely hot swap the battery pack.

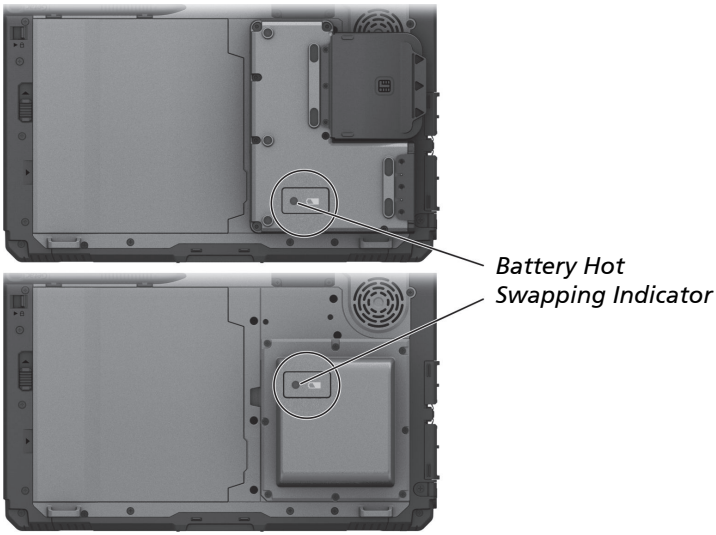

- Once a battery pack is removed, the display brightness level will be fixed at a low level and cannot be adjusted.
- If a charged battery pack is not inserted within 2 minutes, the Tablet PC enters Hibernation mode.

- After removing the battery pack, do not connect and immediately disconnect the power adapter. This will shut down the Tablet PC.

About the Bridge Battery

For models having the bridge battery:

- The bridge battery is not user-replaceable and is invisible to the operating system. It never functions as the power source as long as the battery pack is installed.
- The bridge battery is charged by external AC power if the power adapter is connected.
- If the Battery Hot Swapping Indicator blinks in amber, it means the bridge battery charging is in an abnormal state. Replace the bridge battery in case this happens.

Power-Saving Tips

Aside from enabling your Tablet PC's power saving mode, you can do your part to maximize the battery's operating time by following these suggestions.

- Do not disable Power Management.
- Decrease the LCD brightness to the lowest comfortable level.
- Shorten the length of time before Windows turn off the display.
- When not using a connected device, disconnect it.
- Turn off the wireless radio if you are not using the wireless module (such as WLAN, Bluetooth, or WWAN).
- Turn off the Tablet PC when you are not using it.

Chapter 4

Using Options and Peripherals

This chapter describes the use of optional modules and the connection of peripherals.

Using the Fingerprint Scanner (Optional)

CAUTION:

- For optimal performance, both the scanning surface and the finger should be clean and dry. Clean the scanning surface when needed. You can use adhesive tape to remove dirt and oil from the scanner surface.
- It is not recommended that you use the fingerprint scanner in a below-freezing temperature. The moisture on your finger can freeze to the scanner's metal surface when you touch it, resulting in a failed operation. Besides, touching freezing metal with your finger can cause frostbite.

The fingerprint scanner (if your model has the feature) provides a strong authentication mechanism based on fingerprint recognition. You can log on to Windows and dismiss the lock screen with an enrolled fingerprint instead of a password or PIN.

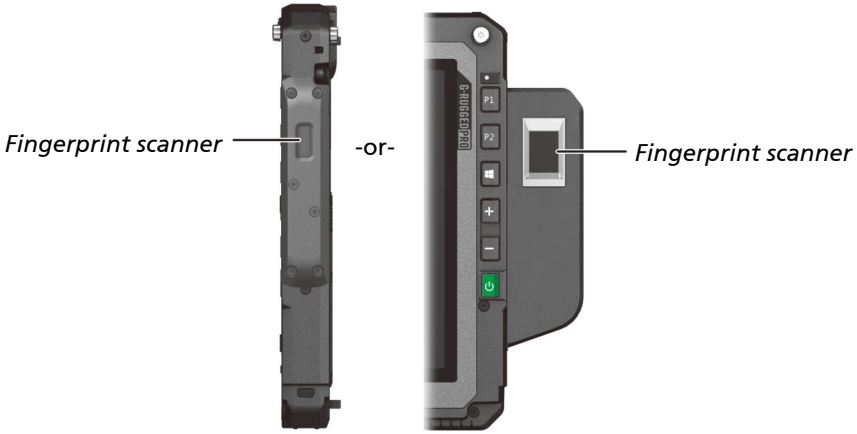

Enrolling a Fingerprint

NOTE: You can enroll a fingerprint only after creating a password/PIN for the Windows user account.

1. Go to **Settings →Accounts → Sign-in options**.
2. Select the fingerprint option.

3. Follow the onscreen instructions to complete.

   When placing your finger on the scanner, make sure you position your finger correctly as described and illustrated below.

   - **Maximum contact area:** Place your finger to completely cover the scanner with maximum contact surface.
   - **Place on the center:** Position the center of your fingerprint (core) at the center of scanner.

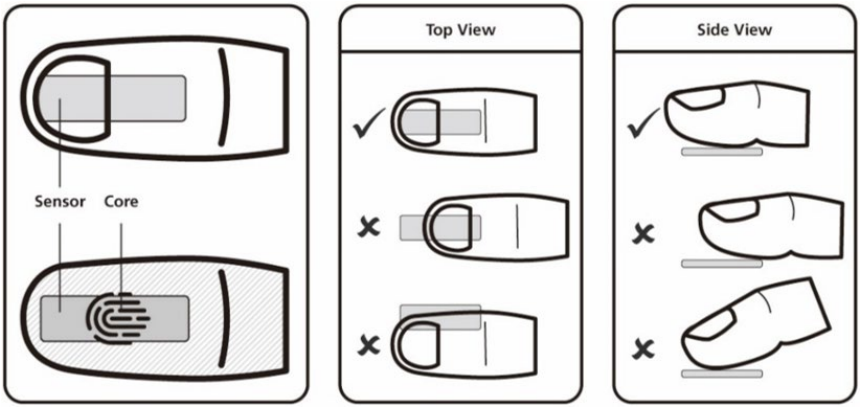

   After placing your finger on the scanner, lift it up and place it down again. You should slightly move your finger between each reading. Repeat this action several times (normally between 12 and 16 times) until the fingerprint is enrolled.

Fingerprint Login

NOTE: The fingerprint login process can take a while. This is because the system has to check hardware devices and security configuration before initiating the fingerprint scanner.

With an enrolled fingerprint, the user can log on by tapping the **Fingerprint** option in Windows login screen and then placing the finger on the scanner. The user can also dismiss the lock screen with the fingerprint.

The fingerprint scanner has 360-degree readability. You can place your finger in any orientation for the scanner to recognize an enrolled fingerprint.

If fingerprint login attempts fail three times, you will be switched to password login.

Using the Barcode Scanner (Optional)

NOTE:

- For enhanced applications and customization of the module, you can use the Barcode Manager program. (For detailed information on the program, see the program's online help.)
- The maximum operating temperature for the barcode scanner is 50 °C (122 °F).

If your model has the barcode scanner module, you can scan and decode most common 1D and 2D symbologies.

1. Start your processing software and open a new or existing file. Place the insertion point (or called cursor) where you want the data to be entered.
2. Press the Trigger button (**P2**) on your Tablet PC. (The button function is configured by G-Manager.)
3. Aim the scan beam at the barcode. (The scan beam projected from the lens varies with models.)

   Adjust the lens' distance from the barcode, shorter for a smaller barcode and farther for a larger one.



NOTE: Improper ambient light and scanning angle can affect the scanning results.

CAUTION: When or immediately after using the barcode scanner for a long time, do not touch the lens area as the area might be hot.

4. Upon a successful scan, the system beeps and the decoded barcode data is entered.

Notes

The below label indicates that your barcode scanner supports the TraCS (Traffic and Criminal Software) trigger button. The TraCS feature is available for customized orders only. If you have already purchased a standard model and require the TraCS feature, please contact Getac technical support for the purpose.



- **Pulse repetition rate:** 57.67 Hz or 16.7 ms
- **Scan angle:** 360° tilt; ±60° pitch; ±60° skew

CAUTION: Use of controls or adjustments or performance of procedures other than those specified herein may result in hazardous radiation exposure.

About Manufacture Date and Labels

See “Manufacture Date and Labels” in Appendix B for information.

Connecting Peripheral Devices

Connecting a USB Device

NOTE: USB 3.2/3.1/3.0 port is backward compatible with USB 2.0 port. However, if necessary, you can set the USB 3.2/3.1/3.0 port to be a USB 2.0 port in the BIOS Setup Utility. Go to the utility, select **Advanced → Device Configuration**, find the setting item, and change the setting to USB 2.0.

Your Tablet PC has a USB 3.2 Gen 2 port for connecting USB devices, such as a digital camera, scanner, printer, modem, and mouse.

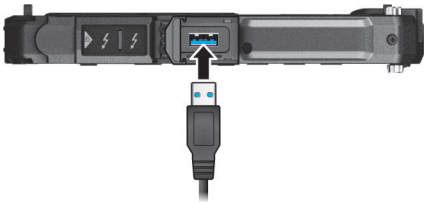

Select models have a USB 2.0 port.

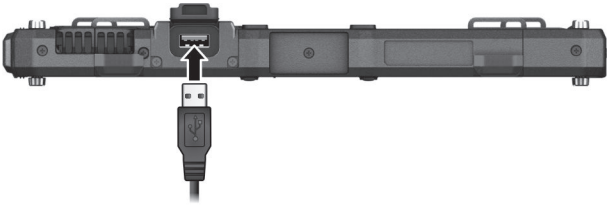

Connecting a Thunderbolt™ Device

Your Tablet PC has two Thunderbolt 4 ports. This port features:

- USB Type-C (or simply USB-C) connector format
- Up to 40 Gbps data transfer speed
- DisplayPort
- USB Power Delivery
  Note that you should use the appropriate wattage/voltage USB-C power adapter for your model.
  USB-C power adapter specifications: 45 W ~ 100 W (20 V, 2.25 A ~ 5 A)

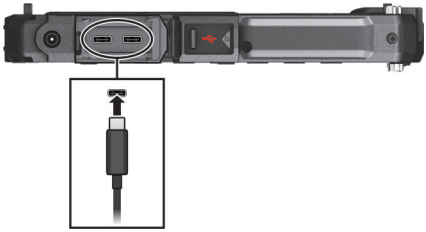

NOTE:

- Thunderbolt ports are backward-compatible with USB-C devices. An USB-C device plugged into a Thunderbolt port will function normally.
- Using a lower wattage USB-C power adapter can result in lower charging speeds or system performance.

Connecting a Display Monitor

Your Tablet PC supports DisplayPort interface (through Thunderbolt).

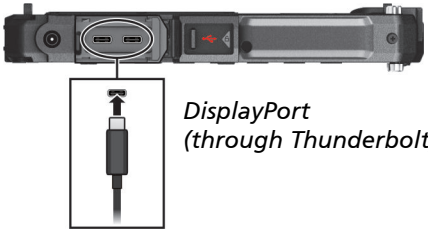

DisplayPort
(through Thunderbolt)

Select models have an HDMI connector.

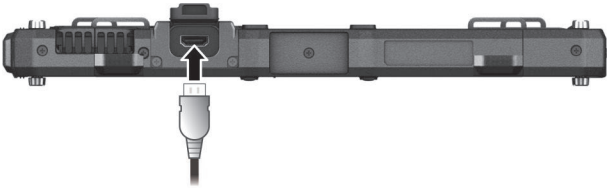

To switch the display output, use Windows **Control Panel** or OSD Control Panel.

Connecting a Serial Device (Optional)

Select models have a RS-232 serial port for connecting a serial device such as a serial mouse or serial communication device.

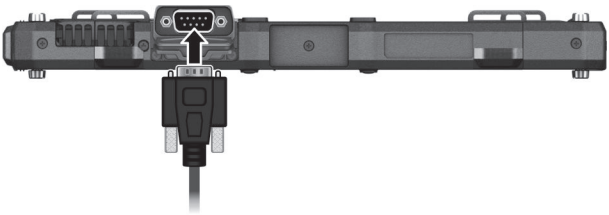

Using Various Card Readers

Using MicroSD Cards (Optional)

If your model has the microSD card reader, you can use microSD cards for removable storage media.

To insert a microSD card:

1. Locate the storage card reader and open the protective cover.
2. Noting the orientation, slide the card into the slot until it reaches the end.



3. Windows will detect the card and assign it a drive name.
4. Close the cover.

To remove a microSD card:

1. Open **File Explorer** and tap **Computer**.
2. Tap and hold the memory card icon and tap **Eject**.
3. Open the cover.
4. Slightly push the card to release and then pull it out of the slot.
5. Close the cover.

Using Smart Cards (Optional)

Select models have a smart card reader. With an embedded microcontroller, smart cards have the unique ability to store large amounts of data, carry out their own on-card functions (e.g., encryption and mutual authentication), and interact intelligently with a smart card reader.

To insert a smart card:

1. Locate the smart card reader and open the protective cover.
2. With the embedded computer chip facing front and near the slot, slide the smart card into the slot.

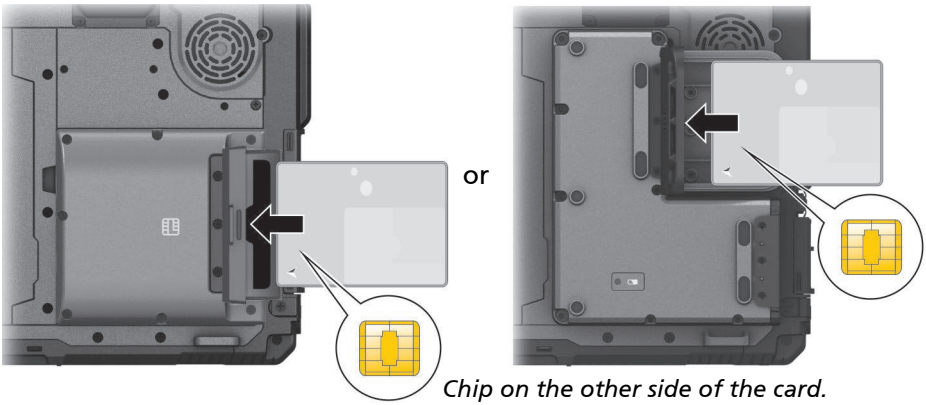

Chip on the other side of the card.

3. Close the cover.

To remove a smart card:

1. Make sure that the software is not accessing the smart card.
2. Open the cover.
3. Slightly push the card to release and then pull it out of the slot.
4. Close the cover.

Using the RFID Reader/Writer (Optional)

Select models have an HF RFID reader/writer module. You can read data from and write data to HF (High Frequency) RFID (Radio Frequency Identification) tags.

The module is enabled by default. To enable or disable the module, run the BIOS Setup program and select **Advanced → Device Configuration → RFID Card Reader**. (See Chapter 5 for information on BIOS Setup.)

For optimal results when accessing an RFID tag, have the tag face the antenna in the same orientation as indicated by the icon on the exterior of the Tablet PC. The icon indicates where the RFID antenna is located.

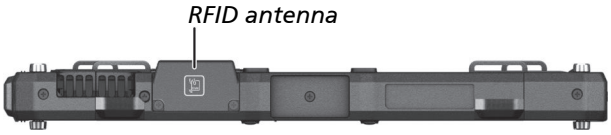

NOTE:

- When not using an RFID card, do not leave it within or near the antenna area.
- For enhanced applications and customization of the module, contact your authorized Getac dealer.

Chapter 5

Using BIOS Setup

BIOS Setup Utility is a program for configuring the BIOS (Basic Input/ Output System) settings of the computer. BIOS is a layer of software, called firmware, that translates instructions from other layers of software into instructions that the computer hardware can understand. The BIOS settings are needed by your Tablet PC to identify the types of installed devices and establish special features.

This chapter tells you how to use the BIOS Setup Utility.

When and How to Use

NOTE:

- The actual setting items on your model may differ from those described in this chapter.
- The availability of some setting items depends on the configuration of your model.

You need to run BIOS Setup Utility when:

- You see an error message on the screen requesting you to run BIOS Setup Utility.
- You want to restore the factory default BIOS settings.
- You want to modify specific settings for the hardware.
- You want to modify specific settings to optimize the system performance.

To run BIOS Setup Utility:

Method 1: During system startup when the logo screen appears, tap the screen or press the **Windows Logo** button on your Tablet PC. In the pre-boot menu that appears, select **Setup Utility**.

NOTE:

- If you don't want any accidental tapping to invoke the pre-boot menu, you can disable this method by setting the "**Screen Tapping for Boot Options**" item in the BIOS Setup Utility.
- The time period in which you can use the above method is extremely short. You can use the other method as described below.

Method 2: Go to **Settings** → **System** → **Recovery**. Under **Advanced startup**, select **Restart now**. In the boot options menu, select **Troubleshoot** → **Advanced options** → **UEFI Firmware Settings**. Select **Restart**. In the pre-boot menu that appears, select **Setup Utility**.

Menu Descriptions

Information Menu

The Information menu contains the basic configuration information of the system. There are no user-definable items in this menu.

NOTE: The "Asset Tag" information appears when you have entered the asset number for this computer using the asset management program. The program is provided in the **Asset tag** folder of the Driver disc.

Main Menu

The Main menu contains the various system settings.

- **System Date** sets the system date.
- **System Time** sets the system time.

Advanced Menu

The Advanced menu contains the advanced setting.

- **Wake Up Capability**
  Home Button Wake Up from Sleep allows the Home button to wake up the system from Sleep mode. The Home button refers to the Windows logo ( ) key.
- **Power Button Delay** sets power button delay time (1 second or 2 seconds) so that accidental touching of the power button does not cause undesired operation. You can also disable the delay.
- **AC Initiation** sets if connecting AC power will automatically start or resume the system.
- **Hybrid Power** enables or disables the Hybrid Power feature. This feature allows a system under heavy loading to function optimally by adjusting the power input from the AC adapter and the battery in a dynamic way. If enabled, the computer will enter Hybrid Power mode once pre-defined conditions are met. It will exit the mode when the conditions are not met.

NOTE: The Hybrid Power mode may cause the battery to discharge and the battery level to drop, especially during sustained high-load conditions.

- **Magnetic Sensor** enables or disables the magnetic sensor. You can disable the magnetic sensor to avoid the magnetic interference in a strong magnetic environment. When this item is disabled, the computer will not enter the power saving state(s) associated with the magnetic sensor.

- **Screen Tapping for Boot Options** sets if tapping the screen during startup will invoke the boot options menu which provides access to some pre-boot operations. If disabled, tapping the screen during startup has no effect to the system's booting process.

- **MAC Address Pass Through** allows the system specific MAC address to pass through a connected dock, meaning the dock specific MAC address will be overridden by the system specific MAC address.

- **Active Management Technology Support** (This item appears only on models supporting vPro.)
  Intel AMT Support enables or disables Intel® Active Management Technology BIOS extension execution. AMT allows the system administrator to access an AMT featured computer remotely.
  Intel AMT Setup Prompt determines whether the prompt for entering Intel AMT Setup appears or not during POST.
  USB Provisioning of AMT enables or disables the use of a USB key for provisioning Intel AMT.

- **Virtualization Technology Setup**
  Intel(R) Virtualization Technology enables or disables Intel® VT (Intel Virtualization Technology) feature which provides hardware support for processor virtualization. When enabled, a VMM (Virtual Machine Monitor) can utilize the additional hardware virtualization capabilities provided by this technology.
  Intel(R) VT for Directed I/O (VT-d) enables or disables VT-d (Intel® Virtualization Technology for Directed I/O). When enabled, VT-d helps enhance Intel platforms for efficient virtualization of I/O devices.

- **Device Configuration** enables or disables several hardware components. The items available for setting depend on your model.

- **Diagnostics and System Tester**
  H2ODST Tool performs system baseline check.

- **Recovery Partition** allows you to restore your Windows system to the factory default state by using the "recovery partition" feature. Recovery partition is a portion of your hard disk drive that is set aside by the manufacturer to hold the original image of your system.

WARNING:

- Using this feature will reinstall Windows to your system and configure it to the system's factory default settings. All data on the hard disk drive will be lost.
- Make sure that power is not interrupted during the recovery process. An unsuccessful recovery may result in Windows startup problems.

- **Windows RE** launches Windows Recovery Environment. Windows RE (Windows Recovery Environment) is a recovery environment that provides recovery, repair, and troubleshooting tools in Windows.

Security Menu

The Security menu contains the security settings, which safeguard your system against unauthorized use.

NOTE:

- You can set the user password only when the supervisor password has been set.
- If both the supervisor and user passwords are set, you can enter any of them for starting up the system and/or entering BIOS Setup. However, the user password only allows you to view/change the settings of certain items.
- A password setting is applied right after it is confirmed. To cancel a password, leave the password empty by pressing the **Enter** key.

- **Set Supervisor/User Password** sets the supervisor/user password. You can set the supervisor/user password to be required for starting up the system and/or entering BIOS Setup.

- **Strong Password** enables or disables strong password. When enabled, the password you set must contain at least one upper-case letter, one lower-case letter, and one digit.

- **Password Configuration** sets the minimum password length. Enter the number in the input field and select **[Yes]**. The number should be between 4 and 64.

- **Password on Boot** allows you to enable or disable the entering of password for booting up your system.

- **Secure Boot Configuration** (This item appears only when the password has been set.)
  Secure Boot enables or disables Secure Boot. Secure Boot is a feature

that helps prevent unauthorized firmware, operating systems, or UEFI drivers from running at boot time.
Delete all Security Boot keys deletes all secure boot variables.
Restore Factory Defaults resets secure boot variables to manufacturing defaults.

- **Set PCIe SSD 0 User Password** sets the password for locking the SSD. After setting a password, the SSD can only be unlocked by the password no matter where it is installed.
- **Security Freeze Lock** enables or disables the "Security Freeze Lock" function. This function is only applicable to SATA drives in AHCI mode. It prevents attacks on the SATA drive by freezing the security state of the drive at POST and also when the system resumes from S3.
- **TPM Setup Menu**
  TPM Support enables or disables TPM (Trusted Platform Module) support. TPM (Trusted Platform Module) is a component on your computer's mainboard that is specifically designed to enhance platform security by providing a protected space for key operations and other security critical tasks.
  Change TPM Status allows you to select between *No Operation* and *Clear*.
- **Intel Trusted Execution Technology** enables utilization of additional hardware capabilities provided by Intel® Trusted Execution Technology.
- **Getac Secure Erase** performs a permanent erasure of all data on the SSD. The erased information is unrecoverable and irretrievable, and it is essential to back up any necessary data before proceeding.

Boot Menu

The Boot menu sets the sequence of the devices to be searched for the operating system.

- **Boot Type Order** determines the boot order. You can rearrange the order by dragging the boot device name up or down in the list.
- Each boot device can be individually set to *On* or *Off*. If you want to exclude a boot device from the boot order, set the device to *Off*.
- **Alternative WBM option** enables or disables WBM (Windows Boot Manager). If your computer has multiple operating systems, enable this

item so that you can choose a specific one from a list of operating systems whenever the computer boots up.

Exit Menu

The Exit menu displays ways of exiting BIOS Setup Utility. After finishing with your settings, you must save and exit so that the changes can take effect.

- **Exit Saving Changes** saves the changes you have made and exits BIOS Setup Utility.
- **Exit Discarding Changes** exits BIOS Setup Utility without saving the changes you have made.
- **Load Setup Defaults** loads the factory default values for all the items.
- **Discard Changes** restores the previous values for all the items.
- **Saves Changes** saves the changes you have made.

Chapter 6

Using Getac Software

Getac software includes application programs for specific computer components and utility programs for overall management.

This chapter briefly introduces the programs.

NOTE: The screenshots and other presentations shown in this document are for reference only. They may differ from the actual screens and presentations generated by the actual product.

OSD Control Panel

The OSD (On Screen Display) Control Panel provides a user-friendly interface for you to quickly activate or operate certain functions on your Tablet PC with a simple tap of the screen.

To open the OSD Control Panel, start the program named **OSDC**. The following screen appears.

For detailed information on the program, see the program's online help.



The above screen is for reference only. Not all items are supported by all models. Depending on your model, the actual items and information appearing on the screen can differ from those shown in this manual.

G-Manager

G-Manager allows you to view, manage, and configure several system functions and features. At the left side of the G-Manager screen are the menu items. Select an item to open its menu.

For detailed information, see the program's online help. Select **About → Help**.

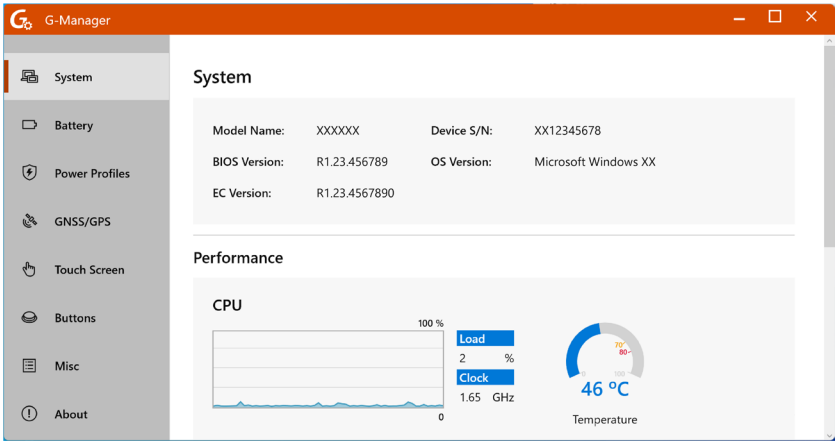

The above screen is for reference only. Not all items are supported by all models. Depending on your model, the actual items and information appearing on the screen can differ from those shown in this manual.

G-Camera (Optional)

G-Camera is a geo-tagging camera application. Geographical information can be embedded into JPEG files as EXIF 2.2 metadata.

NOTE: G-Camera uses the standard location service of Windows.

To start the G-Camera application, select **Start → G-Camera**.



In the middle is the preview window with status display. At the two sides are various buttons.

For detailed information on the program, see the program's online help.

Tap **(Settings) → Help**.

Chapter 7

Care and Maintenance

Taking good care of your Tablet PC will ensure a trouble-free operation and reduce the risk of damage to your Tablet PC.

This chapter gives you guidelines covering areas such as protecting, storing, cleaning, and traveling.

Protecting the Tablet PC

To safeguard the integrity of your Tablet PC data as well as the Tablet PC itself, you can protect the Tablet PC in several ways as described in this section.

Using an Anti-Virus Strategy

You can install a virus-detecting program to monitor potential viruses that could damage your files.

Using the Cable Lock

You can use a Kensington-type cable lock to protect your Tablet PC against theft. The cable lock is available in computer stores.

To use the lock, loop the lock cable around a stationary object such as a table. Insert the lock to the Kensington Security Slot and turn the key to secure the lock. Store the key in a safe place.



Taking Care of the Tablet PC

Location Guidelines

- For optimal performance, use the Tablet PC where the recommended temperature is between -15 °C (5 °F) and 55 °C (131 °F). (Actual operating temperature depends on product specifications.)
- Avoid placing the Tablet PC in a location subject to high humidity, extreme temperatures, mechanical vibration, or heavy dust. Using in extreme environments for long periods can result in product deterioration and a shortened product life.
- Operating in an environment with metallic dust is not allowed.
- Place the Tablet PC on a flat and steady surface. A strong impact by dropping or hitting may damage the Tablet PC.
- Do not cover or block any ventilation openings on the Tablet PC. For example, do not place the Tablet PC on a bed, sofa, rug, or other similar surface. Otherwise, overheating may occur that results in damage to the Tablet PC.
- As the Tablet PC can become very hot during operation, keep it away from objects that are vulnerable to heat.
- Keep the Tablet PC at least 13 cm (5 inches) away from electrical appliances that can generate a strong magnetic field such as a TV, refrigerator, motor, or a large audio speaker.
- Avoid moving the Tablet PC abruptly from a cold to a warm place. A temperature difference of more than 10 °C (18 °F) may cause condensation inside the unit, which may damage the storage media.

General Guidelines

- Do not place heavy objects on top of the Tablet PC as this may damage the display.
- To avoid damaging the screen, do not touch it with any sharp object.
- LCD image sticking occurs when a fixed pattern is displayed on the screen for a prolonged period of time. You can avoid the problem by limiting

the amount of static content on the display. It is recommended that you use a screen saver or turn off the display when it is not in use.

- To maximize the life of the backlight in the display, allow the backlight to automatically turn off as a result of power management.

Cleaning Guidelines

- Never clean the Tablet PC with its power on.
- Use a soft cloth moistened with water or a non-alkaline detergent to wipe the exterior of the Tablet PC.
- Gently wipe the display with a soft, lint-free cloth.
- If water or liquid is split onto the Tablet PC, wipe it dry and clean when possible. Though your Tablet PC is water-proof, do not leave the Tablet PC wet when you can dry it.
- If the Tablet PC gets wet where the temperature is 0° C (32° F) or below, freeze damage may occur. Make sure to dry the wet Tablet PC.

Battery Pack Guidelines

- Recharge the battery pack when it is nearly discharged. When recharging, make sure that the battery pack is fully charged. Doing so may avoid harm to the battery pack.
- The battery pack is a consumable product and the following conditions will shorten its life:
  – when frequently charging the battery pack
  – when using, charging, or storing the battery in high temperature condition
- To avoid hastening the deterioration of the battery pack thereby prolonging its useful life, minimize the number of times you charge it so as not to frequently increase its internal temperature.
- Charge the battery pack between 10 °C ~ 30 °C (50 °F ~ 86 °F) temperature range. A higher environment temperature will cause the battery pack's temperature to rise. Avoid charging the battery pack inside a closed vehicle and in hot weather condition. Also, charging will not start if the battery pack is not within the allowed temperature range.

- It is recommended that you charge the battery pack with the Tablet PC's power off.
- To maintain the battery pack's operating efficiency, store it in a cool dark place removed from the Tablet PC and with 30 % ~ 40 % charge remaining.
- Important guidelines when using the battery pack.
  When installing or removing the battery pack, take note of the following:
  – avoid installing or removing the battery pack when the Tablet PC is in Sleep mode. Abruptly removing the battery pack may cause loss of data or the Tablet PC may become unstable.
  – avoid touching the battery pack terminals or damage may occur, thereby causing improper operation to it or the Tablet PC.
  The Tablet PC's input voltage and surrounding temperature will directly affect the battery pack's charge and discharge time:
  – charging time will be prolonged when the Tablet PC is turned on. To shorten the charging time, it is recommended that you place the Tablet PC in Sleep or Hibernation mode.
  – a low temperature will prolong the charging time as well as hasten the discharge time.
- When using battery power in an extremely low temperature environment, you may experience shortened operating time and incorrect battery level reading. This phenomenon comes from the chemical characteristics of batteries. The appropriate operating temperature for the battery is -10 °C ~ 50 °C (14 °F ~ 122 °F).
- Do not leave the battery pack in storage for more than six months without recharging it.

Touchscreen Guidelines

- Use the finger or the stylus on the display. Using a sharp or metallic object other than your finger or stylus may cause scratches and damage the display, thereby causing errors.
- Use a soft cloth to remove dirt on the display. The touchscreen surface has a special protective coating that prevents dirt from sticking to it. Not using a soft cloth may cause damage to the special protective coating on the touchscreen surface.

- Turn off the Tablet PC power when cleaning the display. Cleaning the display with the power on may cause improper operation.
- Do not use excessive force on the display. Avoid placing objects on top of the display as this may cause the glass to break thereby damaging the display.
- In low and high temperatures (below 5 °C / 41 °F and above 60 °C / 140 °F), the touchscreen may have a slower response time or register the touch in the wrong location. It will go back to normal after returning to room temperature.
- When there is noticeable discrepancy in the operation of the touchscreen function (wrong location on intended operation or improper display resolution), refer to the Windows online Help for instructions on recalibrating the touchscreen display.

When Traveling

- Make sure that the battery pack is fully charged.
- Make sure that the Tablet PC is turned off.
- Make sure that all the connector covers are closed completely to ensure the waterproof integrity.
- Disconnect the power adapter from the Tablet PC and take it with you. Use the power adapter as the power source and as a battery charger.
- Hand-carry the Tablet PC. Do not check it in as luggage.
- If you need to leave the Tablet PC in the car, put it in the trunk of the car to avoid exposing the Tablet PC to excessive heat.
- When going through airport security, it is recommended that you send the Tablet PC and flash disks through the X-ray machine (the device you set your bags on). Avoid the magnetic detector (the device you walk through) or the magnetic wand (the handheld device used by security personnel).
- If you plan to travel abroad with your Tablet PC, consult your dealer for the appropriate AC power cord for use in your country of destination.

Chapter 8

Troubleshooting

Computer problems can be caused by hardware, software, or both. When you encounter any problem, it might be a typical problem that can easily be solved.

This chapter tells you what actions to take when solving common computer problems.

Preliminary Checklist

Here are helpful hints to follow before you take further actions when you encounter any problem:

- Try to isolate which part of the Tablet PC is causing the problem.
- Make sure that you turn on all peripheral devices before turning on the Tablet PC.
- If an external device has a problem, make sure that the cable connections are correct and secure.
- Make sure that the configuration information is properly set in the BIOS Setup program.
- Make sure that all the device drivers are correctly installed.
- Make notes of your observations. Are there any messages on the screen? Do any indicators light? Do you hear any beeps? Detailed descriptions are useful to the service personnel when you need to consult one for assistance.

If any problem persists after you follow the instructions in this chapter, contact an authorized dealer for help.

Solving Common Problems

Battery Problems

The battery does not charge (Battery Charge indicator does not light amber).

- Make sure that the power adapter is properly connected.
- Make sure that the battery is not too hot or cold. Allow time for the battery pack to return to room temperature.
- If the battery doesn't charge after it has been stored in very low temperatures, try disconnecting and reconnecting the power adapter to solve the problem.
- Make sure that the battery pack is installed correctly.
- Make sure that the battery terminals are clean.

The operating time of a fully charged battery becomes shorter.

- If you often partially recharge and discharge, the battery might not be charged to its full potential. Initialize the battery to solve the problem.

The battery operating time indicated by the battery meter does not match the actual operating time.

- The actual operating time can be different from the estimated time, depending on how you are using the Tablet PC. If the actual operating time is much less than the estimated time, initialize the battery.

Bluetooth Problems

I cannot connect to another device with Bluetooth wireless technology.

- Make sure that both devices have activated Bluetooth feature.
- Make sure that the distance between the two devices is within the limit and that there are no walls or other obstructions between the devices.
- Make sure that the other device is not in "Hidden" mode.
- Make sure that both devices are compatible.

Display Problems

Nothing appears on the screen.

- During operation, the screen may automatically turn off as a result of power management. Press any key to see if the screen comes back.
- The brightness level might be too low. Increase the brightness.

The characters on the screen are dim.

- Adjust the brightness and/or contrast.

The display brightness cannot be increased.

- As a protection, the display brightness will be fixed at a low level when the surrounding temperature is too high or too low. It is not a malfunction in this situation.

Bad dots appear on the display at all times.

- A small number of missing, discolored, or bright dots on the screen are an intrinsic characteristic of TFT LCD technology. It is not regarded as an LCD defect.

Clouding (or called "mura") happens on the screen when you exert forces on the left or right side of the LCD frame.

- This is a normal phenomenon, not a defect.

The display has a slower response time in low temperature environments.

- The response time of LCDs can be affected by low temperatures. This does not mean the LCD is defective. The LCD will resume normal response time after returning to room temperature.

Fingerprint Scanner Problems

The following message appears during the fingerprint enrollment process – "Your device is having trouble recognizing you. Make sure your sensor is clean."

- When enrolling a fingerprint, make sure you move your finger slightly between each reading. Not moving or moving too much can both result in fingerprint reading failures.

The following message appears during the fingerprint login process – "Couldn't recognize that fingerprint. Make sure you've set up your fingerprint in Windows Hello."

- When placing your finger on the scanner, make sure your finger aims at the center of the scanner surface and covers as much area as possible.
- If a fingerprint login frequently fails, try enrolling again.

Hardware Device Problems

The Tablet PC does not recognize a newly installed device.

- The device may not be correctly configured in the BIOS Setup program. Run the BIOS Setup program to identify the new type.
- Make sure if any device driver needs to be installed. (Refer to the documentation that came with the device.)
- Check the cables or power cords for correct connections.
- For an external device that has its own power switch, make sure that the power is turned on.

Power Management Problems

The Tablet PC does not enter Sleep or Hibernation mode automatically.

- If you have a connection to another computer, the Tablet PC does not enter Sleep or Hibernation mode if the connection is actively in use.
- Make sure that the Sleep or Hibernation time-out is enabled.

The Tablet PC does not enter Sleep or Hibernation mode immediately.

- If the Tablet PC is performing an operation, it normally waits for the operation to finish.

The Tablet PC does not resume from Sleep or Hibernation mode.

- The Tablet PC automatically enters Sleep or Hibernation mode when the battery pack is empty. Do any one of the following:
  - Connect the power adapter to the Tablet PC.
  - Replace the empty battery pack with a fully charged one.

Software Problems

An application program does not work correctly.

- Make sure that the software is correctly installed.
- If an error message appears on the screen, consult the software program's documentation for further information.
- If you are sure the operation has stopped, reset the Tablet PC.

Sound Problems

No sound is produced.

- Make sure that the volume control is not set too low. Increase the volume.
- Make sure that the sound is not muted.
- Make sure that the Tablet PC is not in Sleep mode.
- If using an external speaker, make sure that the speaker is properly connected.

Distorted sound is produced.

- Make sure that the volume control is not set too high or too low. In most cases, a high setting can cause the audio electronics to distort the sound.

Startup Problems

When you turn on the Tablet PC, it does not respond and the Power Indicator does not light up.

- If you are using external AC power, make sure that the power adapter is correctly and securely connected. If so, make sure that the electrical outlet works properly.
- If you are using the battery power, make sure that the battery is not discharged.

When you turn on the Tablet PC, it stops after POST.

- Reset your Tablet PC.

WLAN Problems

I cannot use the WLAN feature.

- Make sure that the WLAN feature is turned on.

Transmission quality is poor.

- Your Tablet PC may be in an out-of-range situation. Move your Tablet PC closer to the Access Point or another WLAN device it is associated with.
- Check if there is high interference around the environment and solve the problem as described next.

Radio interference exists.

- Move your Tablet PC away from the device causing the radio interference such as microwave oven and large metal objects.
- Plug your Tablet PC into an outlet on a different branch circuit from that used by the affecting device.
- Consult your dealer or an experienced radio technician for help.

I cannot connect to another WLAN device.

- Make sure that the WLAN feature is turned on.
- Make sure that the SSID setting is the same for every WLAN device in the network.
- Your Tablet PC is not recognizing changes. Restart the Tablet PC.
- Make sure that the IP address or subnet mask setting is correct.

I cannot communicate with the computer in the network when Infrastructure mode is configured.

- Make sure that the Access Point your Tablet PC is associated with is powered on and all the LEDs are working properly.
- If the operating radio channel is in poor quality, change the Access Point and all the wireless station(s) within the BSSID to another radio channel.
- Your Tablet PC may be in an out-of-range situation. Move your Tablet PC closer to the Access Point it is associated with.

- Make sure that your Tablet PC is configured with the same security option (encryption) to the Access Point.
- Use the Web Manager/Telnet of the Access Point to check whether it is connected to the network.
- Reconfigure and reset the Access Point.

I cannot access the network.

- Make sure that the network configuration is appropriate.
- Make sure that the user name or password is correct.
- You have moved out of range of the network.
- Turn off power management.

Other Problems

The date/time is incorrect.

- Correct the date and time via the operating system or BIOS Setup program.
- After you have performed everything as described above and still have the incorrect date and time every time you turn on the Tablet PC, the RTC (Real-Time Clock) battery is at the end of its life. Call an authorized dealer to replace the RTC battery.

GPS signals drop when they are not supposed to.

- If your Tablet PC is connected to the docking station which has one or more USB 3.2/3.1/3.0 devices connected, the USB device can interfere with the radio frequency, causing poor GPS signal reception. To solve the problem in this situation, run the BIOS Setup Utility, go to **Advanced** → **Device Configuration** → **Docking USB Port Setting** and change the setting to USB 2.0.

The photos taken show a slight color cast.

- A slight color cast in a photo can sometimes occur due to complex lighting conditions. Adjusting the White Balance setting manually will help achieve more accurate colors.

Resetting the Tablet PC

You may have to reset (reboot) your Tablet PC on some occasions when an error occurs and the program you are using hangs up.

If you are sure the operation has stopped and you cannot use the “restart” function of the operating system, reset the Tablet PC.

Reset the Tablet PC by any one of these methods:

- Press and hold the **P1** button for more than 2 seconds. This opens the **Ctrl-Alt-Del** screen where you can select actions including **Restart** (in the pop-up menu of **Power** icon).
- If the above action does not work, press and hold the power button for more than 5 seconds to force the system to turn off. Then turn on the power again.

System Recovery

Using Windows RE

Windows has a recovery environment (Windows RE) that provides recovery, repair, and troubleshooting tools. The tools are referred to as Advanced Startup Options. You can access these options by selecting **Start → Settings → System → Recovery**.

There are several choices:

- **System Restore**
  This option allows you to restore Windows to an earlier point in time if you have created a restore point.
- **Recover from a drive**
  If you have created a recovery drive on Windows, you can use the recovery drive to reinstall Windows.
- **Reset this PC**
  This option allows you to reinstall Windows with or without keeping your files.

See Microsoft website for more information.

NOTE:

- If you are in a situation where your computer won't boot into Windows, you can access the Advanced Startup Options by running the BIOS Setup Utility and selecting **Advanced → Windows RE**.
- System recovery for Windows typically will take several hours to complete.

Using Recovery Partition

When necessary, you can restore your Windows system to the factory default state by using the "recovery partition" feature. Recovery partition is a portion of your SSD that is set aside by the manufacturer to hold the original image of your system.

WARNING:

- Using this feature will reinstall Windows to your system and configure it to the system's factory default settings. All data on the SSD will be lost.
- Make sure that power is not interrupted during the recovery process. An unsuccessful recovery may result in Windows startup problems.

To restore your system to the factory default state:

1. Connect the power adapter.
2. Run BIOS Setup Utility. Select **Advanced** → **Recovery Partition**. (See Chapter 5 for more information.)
3. Follow the onscreen instructions to complete the process.

Using the Driver Disc (Optional)

NOTE: You can download the latest drivers and utilities from Getac website at http://www.getac.com → **Support**.

The Driver disc contains drivers and utilities required for specific hardware in your Tablet PC.

Since your Tablet PC comes with drivers and utilities pre-installed, you normally do not need to use the Driver disc. In case you want to manually install Windows, you will have to install the drivers and utilities one by one after installing Windows.

To manually install drivers and utilities:

1. Start up the Tablet PC.
2. Prepare an external CD/DVD drive (with USB connection). Connect the drive to your Tablet PC. Wait for the Tablet PC to recognize the drive.
3. Insert the Driver disc. Make sure you use the disc that matches the Windows version of your Tablet PC.
4. The autorun program should automatically start. You will see the installation menu. Tap **NEXT** to go to the next page if there is more than one.
5. To install a driver or utility, just tap the particular button and follow the onscreen instructions to complete the installation.

Appendix A

Specifications

NOTE: Specifications are subject to change without any prior notice.

Parts		Specifications
CPU		Intel® Core™ Ultra Series 2, 8MB Cache
BIOS		Insyde, Flash EEPROM, 32MB, UEFI, supporting ACPI, TPM, Computrace, AMT12, WMI, BIOS diagnostic, Self Healing, and Hybrid power
RAM		8/16/32GB LPDDR5X, 5600MHz
Video	Controller	Intel® Arc™ Graphics 130V
	Display panel	10.1-inch (16:10) TFT LCD, FHD 1920 × 1200, dimmer mode, blackout mode, sunlight readable, 1000 nits standard brightness
Touchscreen		Capacitive multi-touch screen - 10 points
Audio	Features	High Definition audio
	Speaker	1.5 W
	Microphone	Integrated × 2, Mic Array
Mass storage device		256GB/512GB/1TB/2TB SSD (Solid-State Drive), M.2 2280 Form Factor, PCIe interface
I/O ports		USB 3.2 Gen 2, USB-C Thunderbolt 4 × 2, RJ45 (optional), Docking, tri antenna passthrough (optional)
Mutually-exclusive I/O option		One of the below options on the top side (select models only): Barcode scanner / HDMI 2.0 / HF RFID / microSD card / RS-232 serial / USB 2.0 / RJ45
Card slot		Smart Card (optional) MicroSD card (optional)
LAN (optional)		Top side: Intel® i219-LM Gigabit Network Connection, 10/100/1000 Mbps Ethernet
		Right side: 10/100 Mbps Ethernet
Wireless LAN + Bluetooth		Intel® Wi-Fi 7 BE201 + Bluetooth 5.4 combo (vPro)

Parts		Specifications
WWAN + GPS (optional)		4G LTE / 5G NR + GPS combo
		Dual SIM: Micro-SIM 3FF and eSIM
GPS		One of the below depending on your model: - Integrated GPS - Discrete GPS (optional)
Camera (optional)		Front: FHD 5MP webcam, IR sensor (optional) Rear: 13MP, autofocus, LED, video capture **CAUTION:** Possibly hazardous optical radiation emitted from this product. Do not stare at operating lamp. May be harmful to the eyes.
Barcode scanner (optional)		1D and 2D
RFID reader/writer (optional)		Contactless, HF, supporting ISO 14443A/B, MIFARE, ISO 15693, and ISO 18000-3
Security		Kensington Security Slot TPM 2.0 Fingerprint scanner (optional)
Power	AC adapter (optional)	Universal 65 W; input: 100–240 V AC, 50/60 Hz; output: 19 V
	Battery pack	Standard: Model BP3S1P4070P-01, Lithium-ion Polymer type, 3-cell
		High capacity (optional): Model BP3S3P3450P-03, Lithium-ion Prismatic type, 9-cell
	Bridge battery (optional)	Lithium-ion Prismatic type, 2-cell, Hot Swap technology, factory-installed
	Coin battery	CR2016
Dimension (L×W×D)		279 × 194.5 × 23.5 mm (10.98 × 7.65 × 0.92 inches)
Weight		1.15 kg (2.56 lb)
Environ-mental	Tempera-ture*	Operating: -31 °C to 63 °C (-25 °F to 145 °F) Storage: -51 °C to 71 °C (-60 °F to 160 °F)
	Humidity	95% relative humidity, non-condensing
	Drop**	1.8 m (6 ft) drop resistant

Table Notes:

* When using the computer with AC power, a low temperature down to -31 °C (-25 °F) and the temperature range for MIL-STD-810 are supported. When using the Tablet PC with only battery power in a temperature down to -21 °C (-6 °F) (for standard battery packs) or -29 °C (-20 °F) (for high-capacity battery packs), it is advised that the system

be booted in a warm environment, if possible, before being taken into an extreme cold environment for work.

** Drop test results vary with different computer configurations and also vary if optional accessories are attached.

Appendix B

Regulatory Information

This appendix provides regulatory statements and safety notices on your Tablet PC.

NOTE: Marking labels located on the exterior of your Tablet PC indicate the regulations that your model complies with. Please check the marking labels and refer to the corresponding statements in this appendix. Some notices apply to specific models only.

Safety Notices

About the Battery

If the battery is mishandled, it may cause fire, smoke or an explosion and the battery's functionality will be seriously damaged. The safety instructions listed below must be followed.

Danger

- Do not immerse the battery with liquid such as water, sea water or soda.
- Do not charge/discharge or place the battery in high-temperature (more than 80 °C / 176 °F) locations, such as near a fire, heater, in a car in direct sunlight, etc.
- Do not use unauthorized chargers.
- Do not force a reverse-charge or a reverse-connection.
- Do not connect the battery with AC plug (outlet) or car plugs.
- Do not adapt the battery to unspecified applications.
- Do not short circuit the battery.
- Do not drop or subject the battery to impacts.
- Do not penetrate with a nail or strike with a hammer.
- Do not directly solder the battery.
- Do not disassemble the battery.
- Keep the battery away from an extremely low air pressure environment as it may result in an explosion or the leakage of flammable liquid or gas.

Warning

- Keep the battery away from infants.
- Stop using the battery if there are noticeable abnormalities such as abnormal smell, heat, deformities, or discoloration.
- Stop charging if the charging process cannot be finished.

- In case of a leaking battery, keep the battery away from flames and do not touch it.
- Pack the battery tightly during transport.

Caution

- Do not use the battery where static electricity (more than 100V) exists that might damage the protection circuit of the battery.
- When children are using the system, parents or adults must ensure that they are using the system and battery correctly.
- Keep the battery away from flammable materials during charging and discharging.
- In case lead wires or metal objects come out from the battery, you must seal and insulate them completely.

Caution Texts Concerning Lithium Batteries

DANISH
ADVARSEL! Lithiumbatteri – Eksplosionsfare ved fejlagtig håndtering. Udskiftning må kun ske med batteri af samme fabrikat og type. Levér det brugte batteri tilbage til leverandøren.

NORWEGIAN
ADVARSEL: Eksplosjonsfare ved feilaktig skifte av batteri. Benytt samme batteritype eller en tilsvarende type anbefalt av apparatfabrikanten. Brukte batterier kasseres i henhold til fabrikantens instruksjoner.

SWEDISH
VARNING: Explosionsfara vid felaktigt batteribyte. Använd samma batterityp eller en ekvivalent typ som rekommenderas av apparattillverkaren. Kassera använt batteri enligt fabrikantens instruktion.

FINNISH
VAROITUS: Paristo voi räjähtää, jos se on virheellisesti asennettu. Vaihda paristo ainoastaan valmistajan suosittelemaan tyyppiin. Hävitä käytetty paristo valmistajan ohjeiden mukaisesti.

ENGLISH
CAUTION: Danger of explosion if battery is incorrectly replaced. Replace only with the same or equivalent type recommended by the equipment manufacturer. Discard used batteries according to manufacturer's instructions.

DEUTSCH
VORSICHT: Explosionsgefahr bei unsachgemäßem Austausch der Batterie. Ersatz nur durch denselben oder einen vom Hersteller empfohlenen gleichwertigen Typ. Entsorgung gebrauchter Batterien nach Angaben des Herstellers.

FRENCH
ATTENTION: Il y a danger d'explosion s'il y a remplacement incorrect de la batterie. Remplacer uniquement avec une batterie du même type ou d'un type équivalent recommandé par le constructeur. Mettre au rebut les batteries usagées conformément aux instructions du fabricant.

Attention (for USA Users)

The product that you have purchased contains a rechargeable battery. The battery is recyclable. At the end of its useful life, under various state and local laws, it may be illegal to dispose of this battery into the municipal waste stream. Check with your local solid waste officials for details in your area for recycling options or proper disposal.

Caution Texts Concerning Coin Batteries

⚠ WARNING

- **INGESTION HAZARD:** This product contains a button cell or coin battery.
- **DEATH** or serious injury can occur if ingested.
- A swallowed button cell or coin battery can cause **Internal Chemical Burns** in as little as **2 hours**.
- **KEEP** new and used batteries **OUT OF REACH of CHILDREN**.
- **Seek immediate medical attention** if a battery is suspected to be swallowed or inserted inside any part of the body.



- The coin battery is not user replaceable. It must be replaced by Getac authorized service centers.
- Remove and immediately recycle or dispose of used batteries according to local regulations and keep away from children. Do NOT dispose of batteries in household trash or incinerate.

- Even used batteries may cause severe injury or death.
- Call a local poison control center for treatment information.
- Battery type: CR2016
- Nominal battery voltage: 3 V
- Non-rechargeable batteries are not to be recharged.
- Do not force discharge, recharge, disassemble, heat above 60 °C (140 °F), or incinerate. Doing so may result in injury due to venting, leakage or explosion resulting in chemical burns.
- Ensure the batteries are installed correctly according to polarity (+ and -).
- Do not mix old and new batteries, different brands or types of batteries, such as alkaline, carbon-zinc, or rechargeable batteries.
- Remove and immediately recycle or dispose of batteries from equipment not used for an extended period of time according to local regulations.
- Always completely secure the battery compartment. If the battery compartment does not close securely, stop using the product, remove the batteries, and keep them away from children.

About the AC Adapter

- It is recommended to use a Getac adapter for optimal performance. Using other adapters may not guarantee system stability or sufficient power delivery under heavy workloads, potentially resulting in system malfunction or safety hazards.
- If a ground/earth pin attachment plug on the AC power cord is provided, always plug the cord into a grounded/earthed outlet. Do not disable ground/earth pin of the plug/cord.
- Do not use the adapter in a high moisture environment. Never touch the adapter when your hands or feet are wet.
- Allow adequate ventilation around the adapter when using it to operate the device or charge the battery. Do not cover the AC adapter with paper or other objects that will reduce cooling. Do not use the AC adapter while it is inside a carrying case.

- Connect the adapter to a proper power source. The voltage requirements are found on the product case and/or packaging.
- Do not use the adapter if the cord becomes damaged.
- Do not attempt to service the unit. There are no serviceable parts inside. Replace the unit if it is damaged or exposed to excess moisture.

Heat Related Concerns

Your device may become very warm during normal use. It complies with the user-accessible surface temperature limits defined by the International Standards for Safety. Still, sustained contact with warm surfaces for long periods of time may cause discomfort or injury. To reduce potential heat-related concerns, follow these guidelines:

- Keep your device and its power adapter in a well-ventilated area when in use or charging. Allow for adequate air circulation under and around the device.
- Use common sense to avoid situations where your skin is in contact with your device or its power adapter when it's operating or connected to a power source. For example, don't sleep with your device or its power adapter, or place it under a blanket or pillow, and avoid contact between your body and your device when the power adapter is connected to a power source. Take special care if you have a physical condition that affects your ability to detect heat against the body.
- If your device is used for long periods, its surface can become very warm. While the temperature may not feel hot to the touch, if you maintain physical contact with the device for a long time, for example if you rest the device on your lap, your skin might suffer a low-heat injury.
- If your device is on your lap and gets uncomfortably warm, remove it from your lap and place it on a stable work surface.
- Never place your device or power adapter on furniture or any other surface that might be marred by exposure to heat since the base of your device and the surface of the power adapter may increase in temperature during normal use.

North America

USA

Company name	Getac Inc.
Address	15495 Sand Canyon Rd., Suite 350 Irvine, CA 92618 USA
Phone	+1-949-681-2900

Federal Communications Commission Radio Frequency Interference Statement

NOTE:

This equipment has been tested and found to comply with the limits for a Class B digital device pursuant to Part 15 of the FCC Rules. These limits are designed to provide reasonable protection against harmful interference in a residential installation. This equipment generates, uses, and can radiate radio frequency energy and, if not installed and used in accordance with the instructions, may cause harmful interference to radio communications. However, there is no guarantee that interference will not occur in a particular installation. If this equipment does cause harmful interference to radio or television reception, which can be determined by turning the equipment off and on, the user is encouraged to try to correct the interference by one or more of the following measures:

- Reorient or relocate the receiving antenna.
- Increase the separation between the equipment and receiver.
- Connect the equipment into an outlet on a circuit different from that to which the receiver is connected.
- Consult the dealer or an experienced radio/TV technician for help.

Any changes or modifications not expressly approved by the manufacturer could void the user's authority to operate the equipment.

Please note:

The use of a non-shielded interface cable with this equipment is prohibited.

This device complies with Part 15 of the FCC Rules. Operation is subject to the following two conditions:

(1) This device may not cause harmful interference.

(2) This device must accept any interference received, including interference that may cause undesired operation.

RF Exposure Information (SAR)

This product meets applicable national SAR limits of 1.6W/kg.

This specific maximum SAR values can be found in the section of this user guide. When carrying the product or using it while worn on your body, maintain a distance of 0mm from the body to ensure compliance with RF exposure requirements. Note that the product may be transmitting even if you are not Surfing Internet.

Body SAR: 1.59 W/kg

ANSI Warning

Equipment approved for ANSI/UL121201 and CSA C22.2 No. 213, Nonincendive Electrical Equipment for use in Class I, Division 2, Group A, B, C, and D. Ambient temperature: -29°C to 45°C

EXPLOSION HARZARD WARNINGS:

- External connections/hubs through the connectors as mentioned (HDMI port, combo audio port, USB Type-A port, USB Type-C port, RJ45 port, RS-232 port, DC-in jack, docking port, and tri antenna passthrough connector) are **NOT** to be used in a hazardous location. When used with a docking station (such as the office dock, keyboard dock, or vehicle dock), the docking/undocking of the equipment must be conducted outside the hazardous area. Docking/undocking in a hazardous area is prohibited.
- The tablet is to be only powered from the battery pack while in hazardous locations. Power adapter is **NOT** certified to use in hazardous locations and **NOT** to be used in hazardous locations.
- The battery must only be changed in an area known to be non-hazardous.
- **DO NOT** disconnect equipment unless power has been switched off or the area is known to be non-hazardous.

- **DO NOT** remove or replace a user-removable item (such as the battery pack, micro-SIM card, smart card, etc.) while the circuit is live unless the area is free of ignitable concentrations.
- Replace the battery with battery model BP3S1P4070P-01 or BP3S3P3450P-03, manufactured by Getac Technology Corporation only. Use of another battery may present a risk of fire or explosion.
- The lock of the battery pack must be engaged when used in hazardous locations.

California Proposition 65

For California USA:

Proposition 65, a California law, requires warnings to be provided to California consumers when they might be exposed to chemical(s) identified by Proposition 65 as causing cancer and birth defects or other reproductive harm.

Almost all electronic products contain 1 or more of the chemicals listed under Proposition 65. This does not mean the products pose a significant risk of exposure. As the consumers have the right to know about the products they purchase, we are giving this warning on our packaging and user manual to keep our consumers well informed.

⚠ WARNING

This product can expose you to chemicals including lead, TBBPA or formaldehyde, which are known to the State of California to cause cancer and birth defects or other reproductive harm. For more information go to www.P65Warnings.ca.gov

Canada

Canadian ICES-003

CAN ICES-3(B)/NMB-3(B)

This device contains licence-exempt transmitter(s)/receiver(s) that comply with Innovation, Science and Economic Development Canada's licence-exempt RSS(s). Operation is subject to the following two conditions: (1) This device may not cause interference. (2) This device must accept any interference, including interference that may cause undesired operation of the device.

L'émetteur/récepteur exempt de licence contenu dans le présent appareil est conforme aux CNR d'Innovation, Sciences et Développement économique Canada applicables aux appareils radio exempts de licence. L'exploitation est autorisée aux deux conditions suivantes : 1) L'appareil ne doit pas produire de brouillage; 2) L'appareil doit accepter tout brouillage radioélectrique subi, même si le brouillage est susceptible d'en compromettre le fonctionnement.

The device could automatically discontinue transmission in case of absence of information to transmit, or operational failure. Note that this is not intended to prohibit transmission of control or signaling information or the use of repetitive codes where required by the technology.

L'appareil peut interrompre automatiquement la transmission en cas d'absence d'informations à transmettre ou de panne opérationnelle. Notez que ceci n'est pas destiné à interdire la transmission d'informations de contrôle ou de signalisation ou l'utilisation de codes répétitifs lorsque cela est requis par la technologie.

Caution:

1) The device for operation in the band 5150–5250 MHz is only for indoor use to reduce the potential for harmful interference to co-channel mobile satellite systems;

2) For devices with detachable antenna(s), the maximum antenna gain permitted for devices in the bands 5250-5350 MHz and 5470-5725 MHz shall be such that the equipment still complies with the e.i.r.p. limit;

3) For devices with detachable antenna(s), the maximum antenna gain permitted for devices in the band 5725-5850 MHz shall be such that the equipment still complies with the e.i.r.p. limits specified for point-to-point and non-point-to-point The high-power radars are allocated as primary

users (i.e. priority users) of the bands 5250-5350 MHz and 5650-5850 MHz and that these radars could cause interference and/or damage to LE-LAN devices.

DFS (Dynamic Frequency Selection) products that operate in the bands 5250-5350 MHz, 5470-5600MHz, and 5650-5725MHz.

Avertissement:

1) Le dispositif fonctionnant dans la bande 5150-5250 MHz est réservé uniquement pour une utilisation à l'intérieur afin de réduire les risques de brouillage préjudiciable aux systèmes de satellites mobiles utilisant les mêmes canaux;

2) Le gain maximal d'antenne permis pour les dispositifs avec antenne(s) amovible(s) utilisant les bandes 5250-5350 MHz et 5470-5725 MHz doit se conformer à la imitation P.I.R.E.;

3) Le gain maximal d'antenne permis pour les dispositifs avec antenne(s) amovible(s) utilisant la bande 5725-5850 MHz doit se conformer à la limitation P.I.R.E spécifiée pour l'exploitation point à point et non point à point, selon le cas.

En outre, les utilisateurs devraient aussi être avisés que les utilisateurs de radars de haute puissance sont désignés utilisateurs principaux (c.-à-d., qu'ils ont la priorité) pour les bandes 5250-5350 MHz et 5650-5850 MHz et que ces radars Les produits utilisant la technique d'atténuation DFS (sélection dynamique des réquences) sur les bandes 5250- 5350 MHz, 5470-5600MHz et 5650-5725MHz.

Devices shall not be used for control of or communications with unmanned aircraft systems.

Les dispositifs ne doivent pas être utilisés pour commander des systèmes d'aéronef sans pilote ni pour communiquer avec de tells.

RF Exposure Information (SAR)

This EUT is compliance with SAR for general population/uncontrolled exposure limits in IC RSS-102 and had been tested in accordance with the measurement methods and procedures specified in IEEE 1528 and IEC 62209.

This equipment should be installed and operated with minimum distance 0cm between the radiator and your body. This device and its antenna(s) must not be co-located or operating in conjunction with any other antenna or transmitter.

Cet appareil est conforme aux limites d'exposition DAS incontrôlée pour la population générale de la norme CNR- 102 d'Industrie Canada et a été testé en conformité avec les méthodes de mesure et procédures spécifiées dans IEEE 1528 et IEC 62209.

Cet appareil doit être installé et utilisé avec une distance minimale de 0cm entre l'émetteuret votre corps. Cet appareil et sa ou ses antennes ne doivent pas être co-localisés ou fonctionner en conjonction avec tout autre antenne ou transmetteur.

Body SAR: 1.59 W/kg

User Notification of Take-back Service

To customers in the United States:

Getac is committed to minimizing environmental impact and promoting a circular economy through our comprehensive Take-Back Program. This take-back service is offered everywhere in the United States, ensuring all customers have convenient access to sustainable product return solutions. To ensure the responsible handling of end-of-life devices, Getac follows a structured three-stage process. In line with EPEAT requirements, we prioritize reuse, followed by refurbishment and materials recovery, before considering energy recovery or disposal.

For more information, see the Getac website at https://www.getac.com/us/environment/take-back-program/.

For recycling Getac batteries, please visit this website https://www.getac.com/us/environmental-certifications/.

Europe Marking and Compliance Notices

Company name	Getac Technology GmbH.
Address	Kanzlerstrasse 4 40472 Dusseldorf, Germany
Phone	+49 (0) 211-984819-0

Company name	Getac UK Ltd.
Address	Getac House, Stafford Park 12, Telford, Shropshire, TF3 3BJ, UK
Phone	+44 (0) 1952-207-222

Statements of Compliance

EU

English
Getac hereby declares that this product complies with the EU Directive 2014/53/EU. The full text of the EU declaration of conformity is available at:
https://support.getac.com/Portal/Page/809

Deutsch
Getac erklärt hiermit, dass Gerät mit den grundlegenden Anforderungen und anderen relevanten Bestimmungen der Richtlinie 2014/53/EU übereinstimmt. Der gesamte Text der EU Konformitätserklärung ist verfügbar unter:
https://support.getac.com/Portal/Page/846

Español
Por la presente, Getac declara que el producto cumple con la Directiva de la UE 2014/53/UE. El texto completo de la declaración UE de conformidad se encuentra a continuación.
https://support.getac.com/Portal/Page/866

Français
Getac déclare par la présente que cet appareil est conforme aux critères essentiels et autres clauses pertinentes de la directive 2014/53/EU. La déclaration de conformité de l'UE peut être téléchargée à partir du site internet suivant :
https://support.getac.com/Portal/Page/879

Italiano
Getac con la presente dichiara che questo dispositivo è conforme ai requisiti essenziali e alle altre disposizioni pertinenti con la direttiva 2014/53/EU. Il testo completo della dichiarazione di conformità UE è disponibile all'indirizzo: https://support.getac.com/Portal/Page/892

Notices

Max power:
WWAN: 25 dBm
WLAN 2.4G: 20 dBm
WLAN 5150-5725MHz: 23 dBm
WLAN 5725-5875: 14 dBm
WLAN 6E (LPI): 23 dBm
WLAN 6E (VLP): 14 dBm
BT: 20 dBm
RFID: 14.22 dBuA/m at 10m
Digitizer: -13.14 dBuA/m at 10m

The device is restricted to indoor use only when operating in the 5150 to 5350 MHz frequency range.

	BE	BG	CZ	DK	DE	EE
	IE	EL	ES	FR	HR	IT
	CY	LV	LT	LU	HU	MT
	NL	AT	PL	PT	RO	SI
	SK	FI	SE	NO	IS	LI
	CH	TR	UK (NI)			

Restriction or Requirement in the UK: 5150 to 5350 MHz indoor-use only.

	UK



Waste Electrical and Electronic Equipment (WEEE)

This symbol means that according to local laws and regulations your product shall be disposed of separately from household waste. When this product reaches its end of life, take it to a collection point designated by local authorities. Proper recycling of your product will protect human health and the environment.



Battery Regulation — Information for Users

In the European Union, this label indicates that the batteries in this product should be collected separately and not be disposed of with household waste. Substances in batteries can have a potential impact on health and environment and you have a role in recycling waste batteries thus contributing to the protection, preservation, and improvement of the quality of the environment.

Restriction of Hazardous Substances (RoHS) Directive

EU RoHS

Getac products meet the requirements of Directive 2011/65/EU on the restriction of the use of certain hazardous substances in electrical and electronic equipment. For more information about RoHS, go to: https://www.getac.com/us/environment/

Declaration of Conformity

See the CE/UK **Declaration of Conformity** document supplied in the package of your product.

About USB Power Delivery

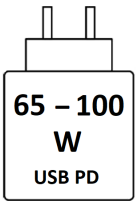

Wattage for charging:
Minimum 65 W
Maximum 100 W

ENERGY STAR

ENERGY STAR® is a government program that offers businesses and consumers energy-efficient solutions, making it easy to save money while protecting the environment for future generations.

Please reference ENERGY STAR® related information from http://www.energystar.gov.

As an ENERGY STAR® Partner, Getac Technology Corporation has determined that this product meets the ENERGY STAR® guidelines for energy efficiency.

All Getac products with ENERGY STAR® logo comply with the ENERGY STAR® standard, and the power management feature is enabled by default. Getac's ENERGY STAR® qualified products are listed on the EPA website. https://www.energystar.gov/products

NOTE: This product complies with ENERGY STAR® only if it is used with the power adapter supplied by Getac.

About Battery and External Enclosure Replacement

Battery

The batteries of your product include a battery pack and a button cell (or called RTC battery). Select models have a bridge battery. All batteries are available from Getac authorized service centers.

The battery pack is user-replaceable. Replacement instructions can be found in “Replacing the Battery Pack” in Chapter 3. The bridge battery and button cell must be replaced by Getac authorized service centers.

Visit the website at http://us.getac.com/support/support-select.html for authorized service center information.

External Enclosure

The external enclosure of the product can be removed using screwdrivers. The external enclosure can then be reused or refurbished.

Manufacture Date and Labels

The manufacture date is identified by the second and third digits of the product's serial number.

Example:

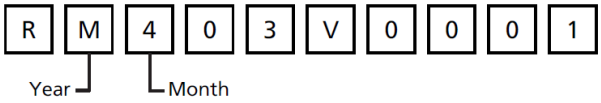

Code	Year
M	2021
N	2022
P	2023
Q	2024
R	2025
S	2026
T	2027
U	2028
V	2029
W	2030
X	2031
Y	2032

Code	Month
1	Jan.
2	Feb.
3	Mar.
4	Apr.
5	May
6	Jun.
7	Jul.
8	Aug.
9	Sep.
A	Oct.
B	Nov.
C	Dec.

See the next page for the label information.

The below labels are for reference only. The actual contents of the labels depend on your model.

