Network Video Recorder Pro

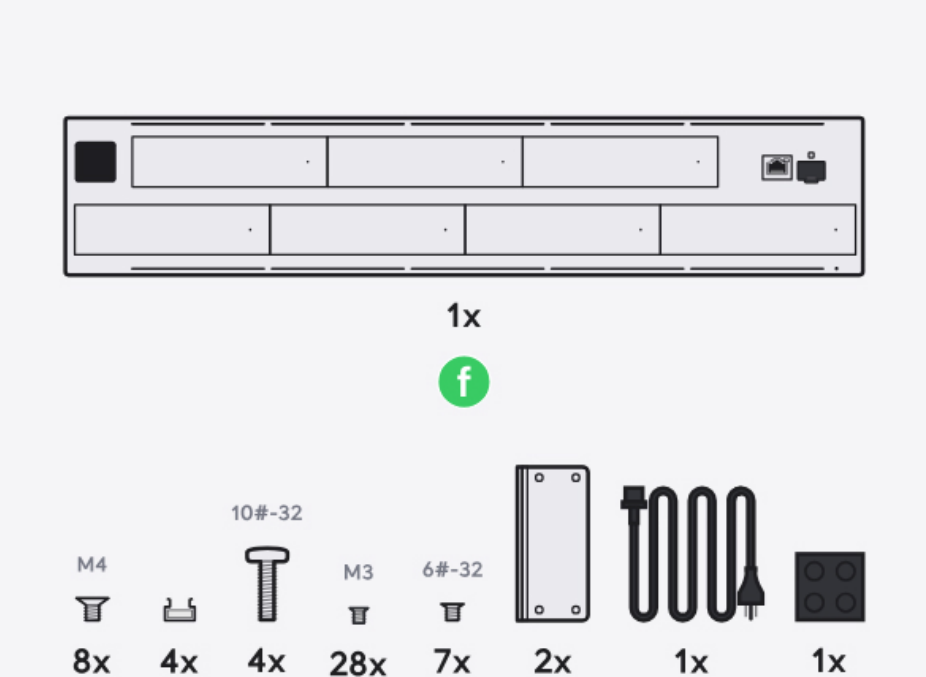
1x
f
M4
8x
a
4x
b
10#-32
4x
c
M3
28x
d
6#-32
7x
e
2x
g
1x
h
1x
i

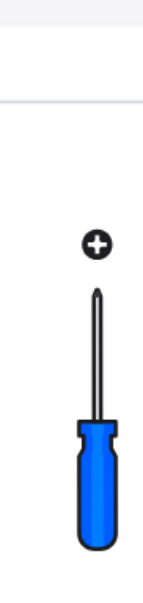

1

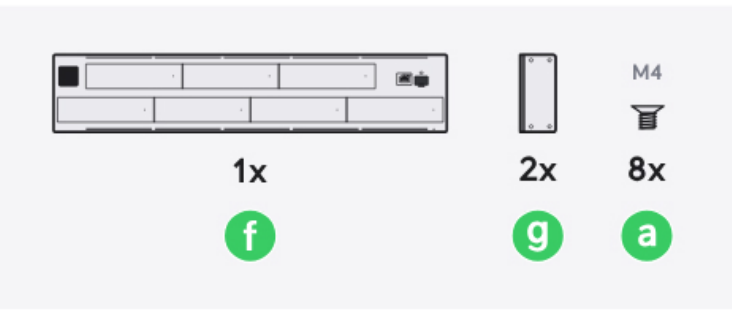
1x
f
2x
g
M4
8x
a

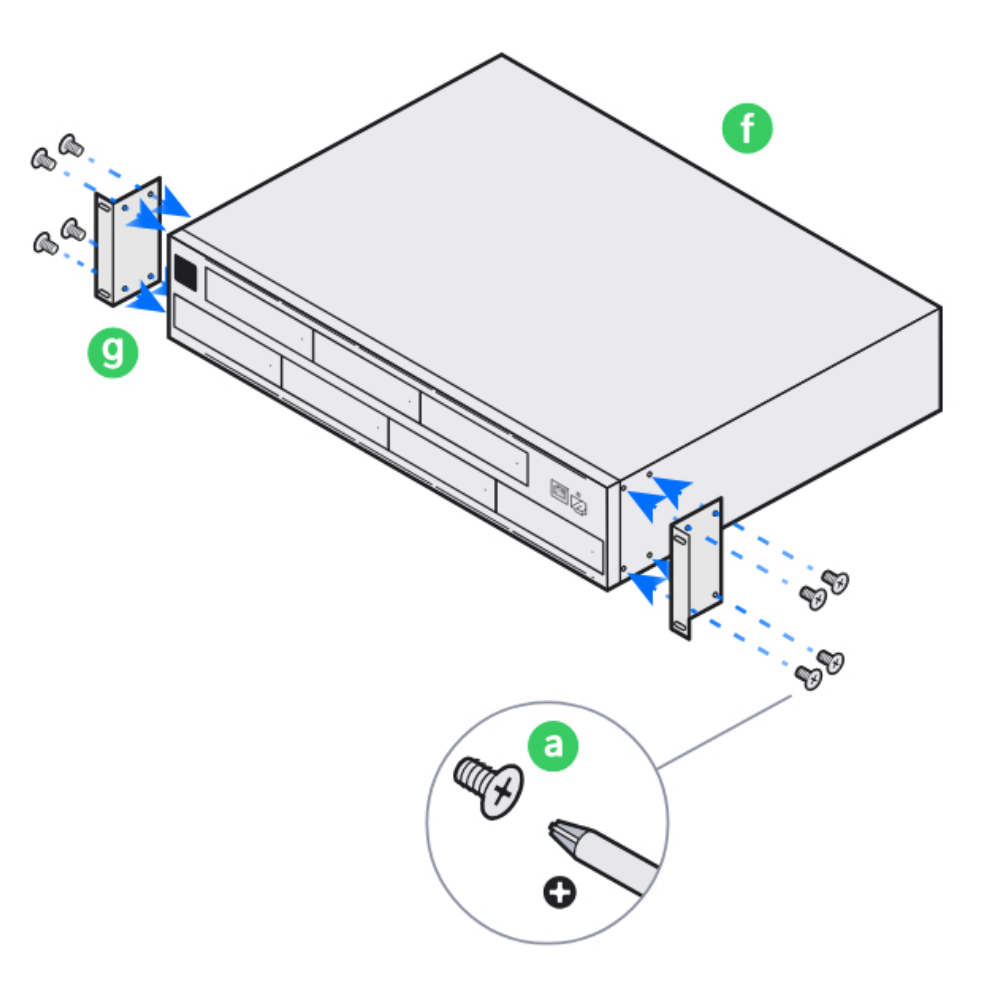

2

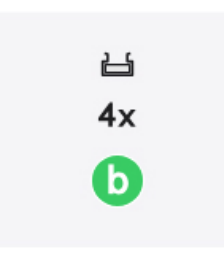

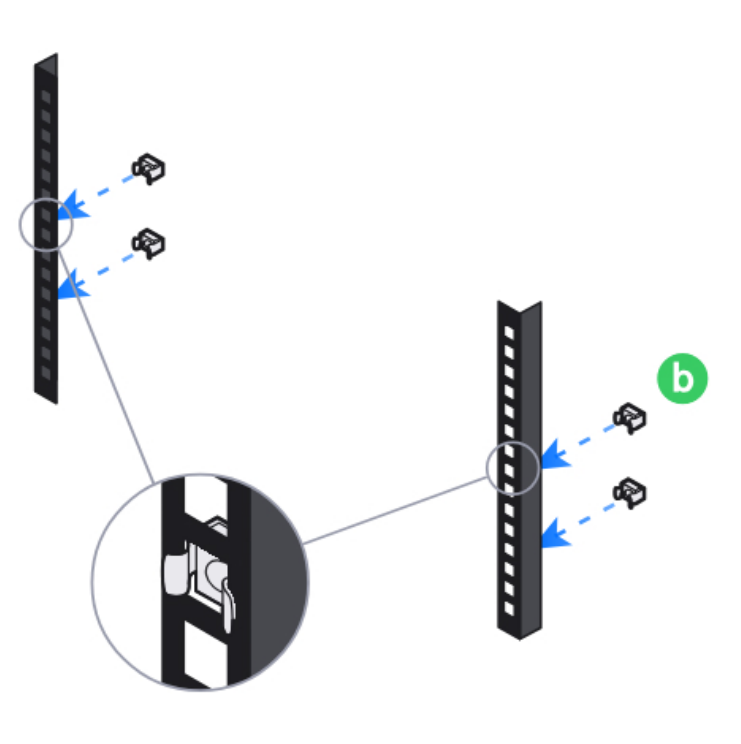

3

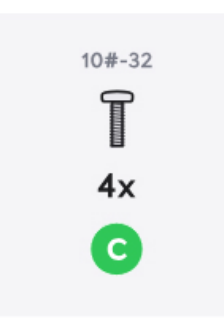

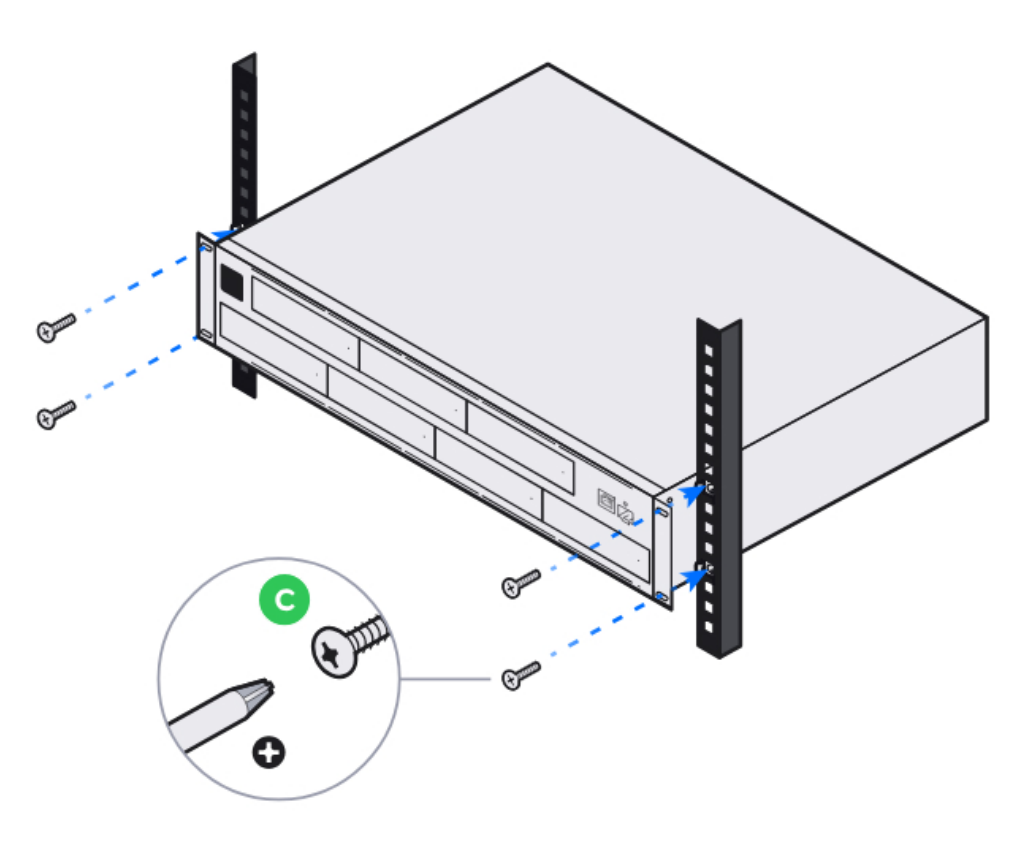

4

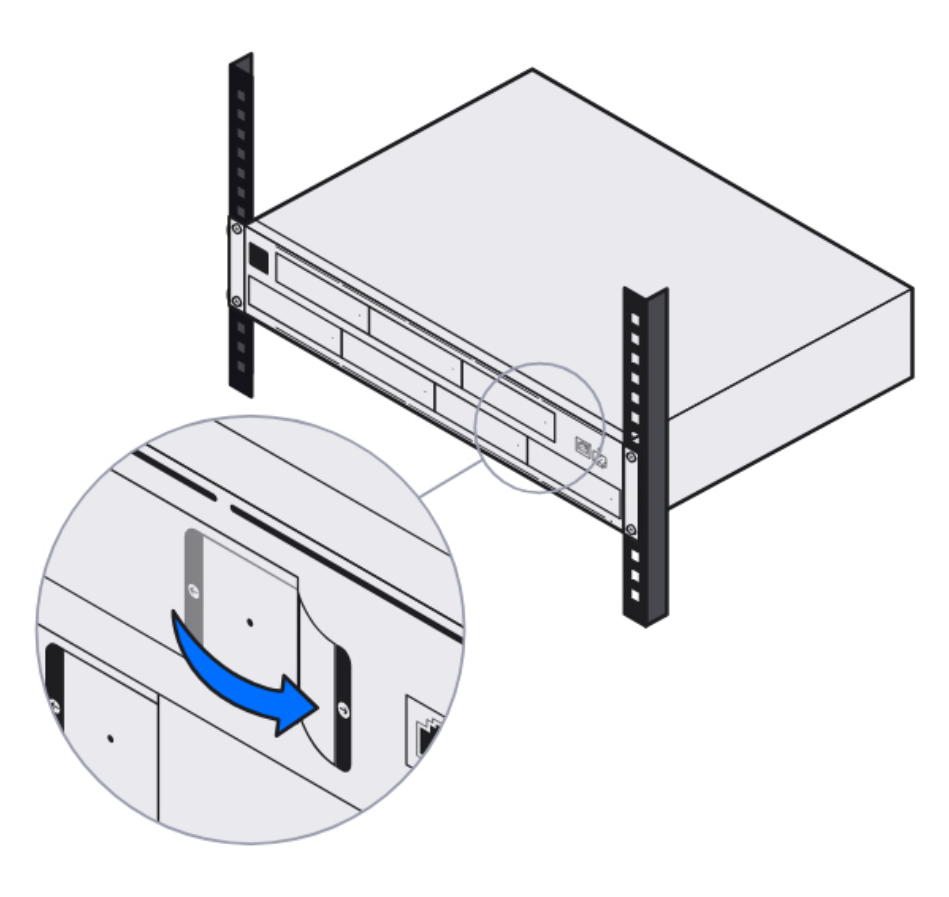

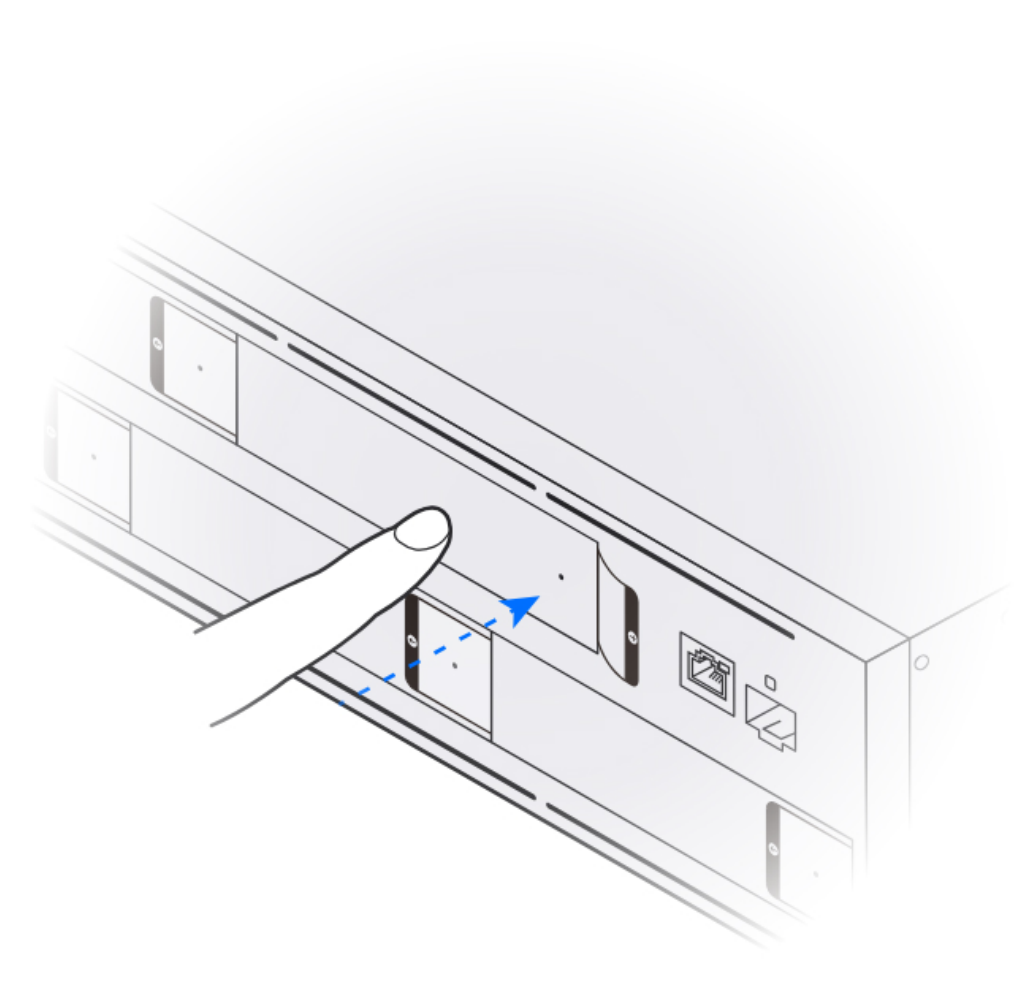

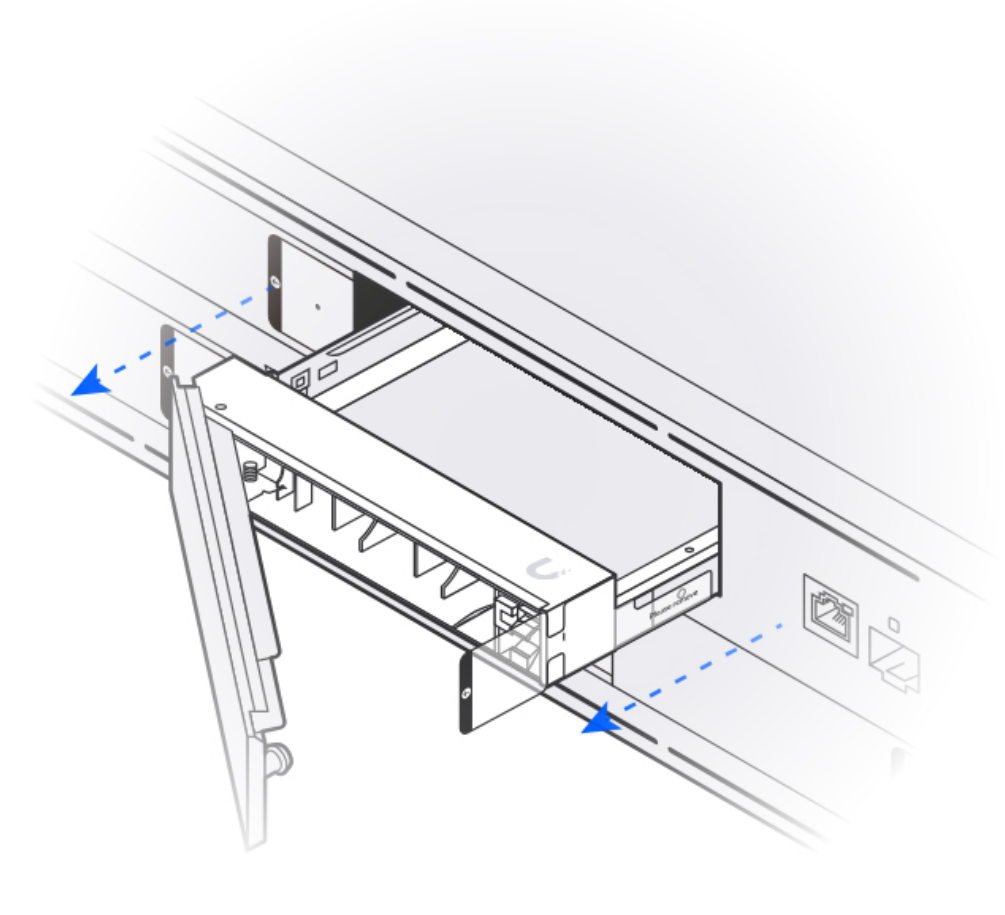

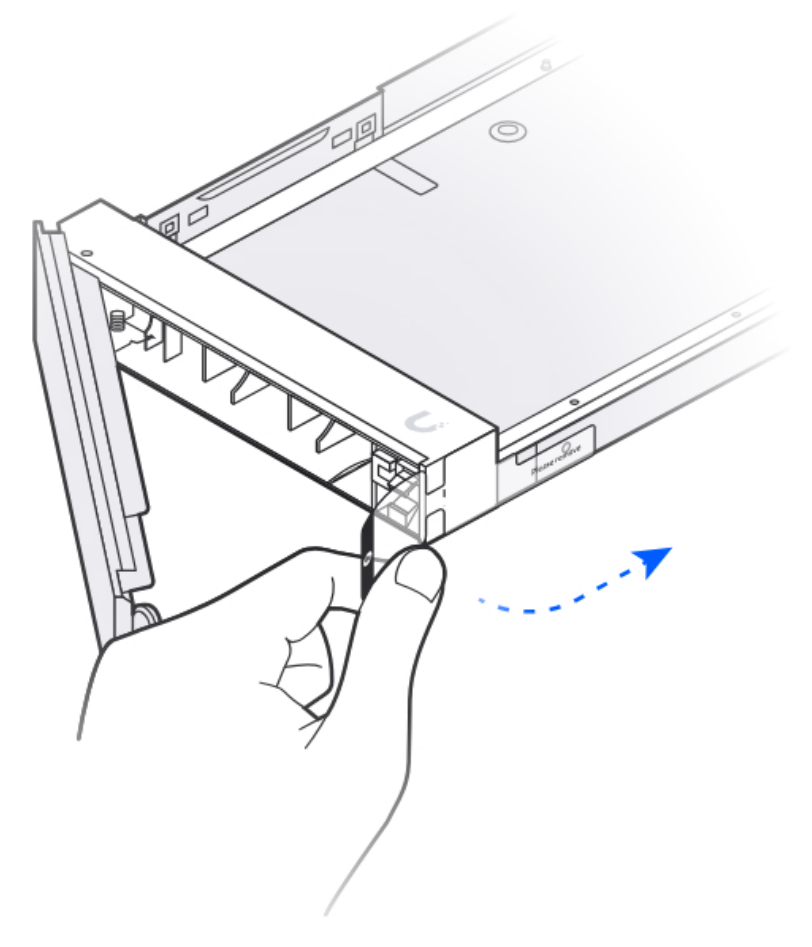

5

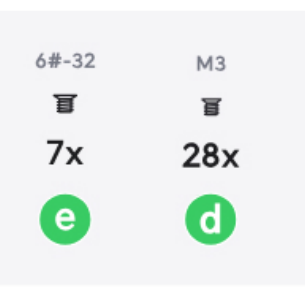
6#-32
7x
e
M3
28x
d

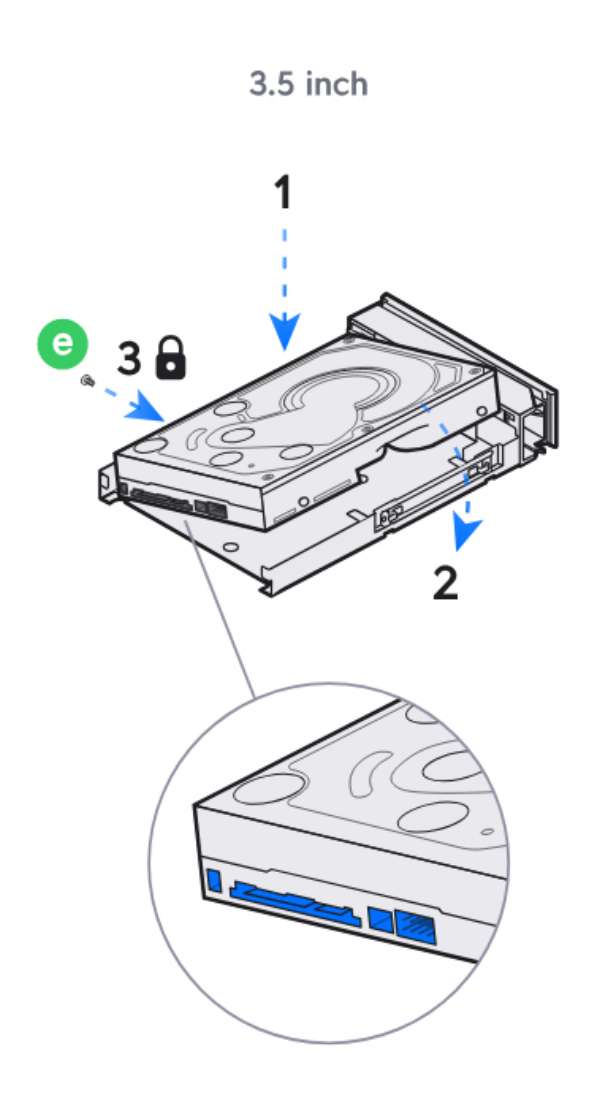
3.5 inch
1
e
3
2

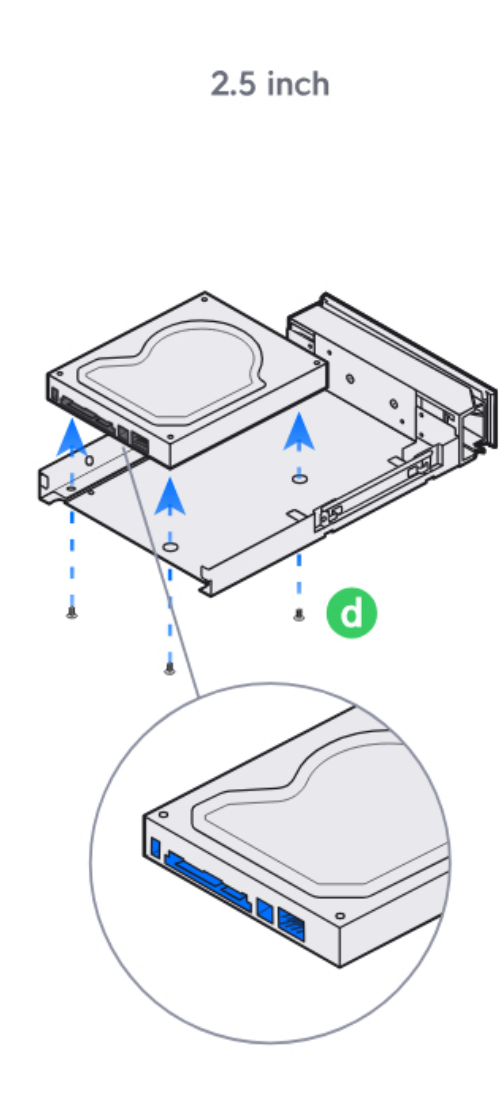

6

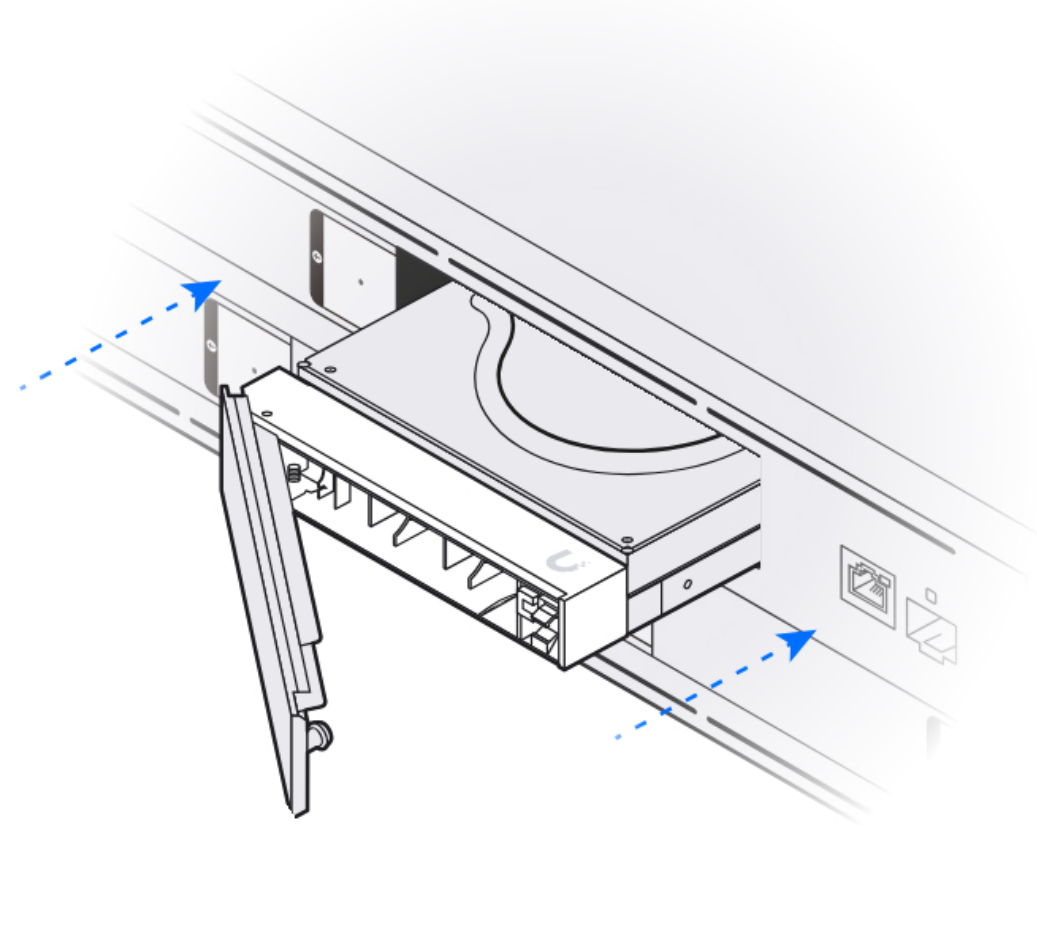

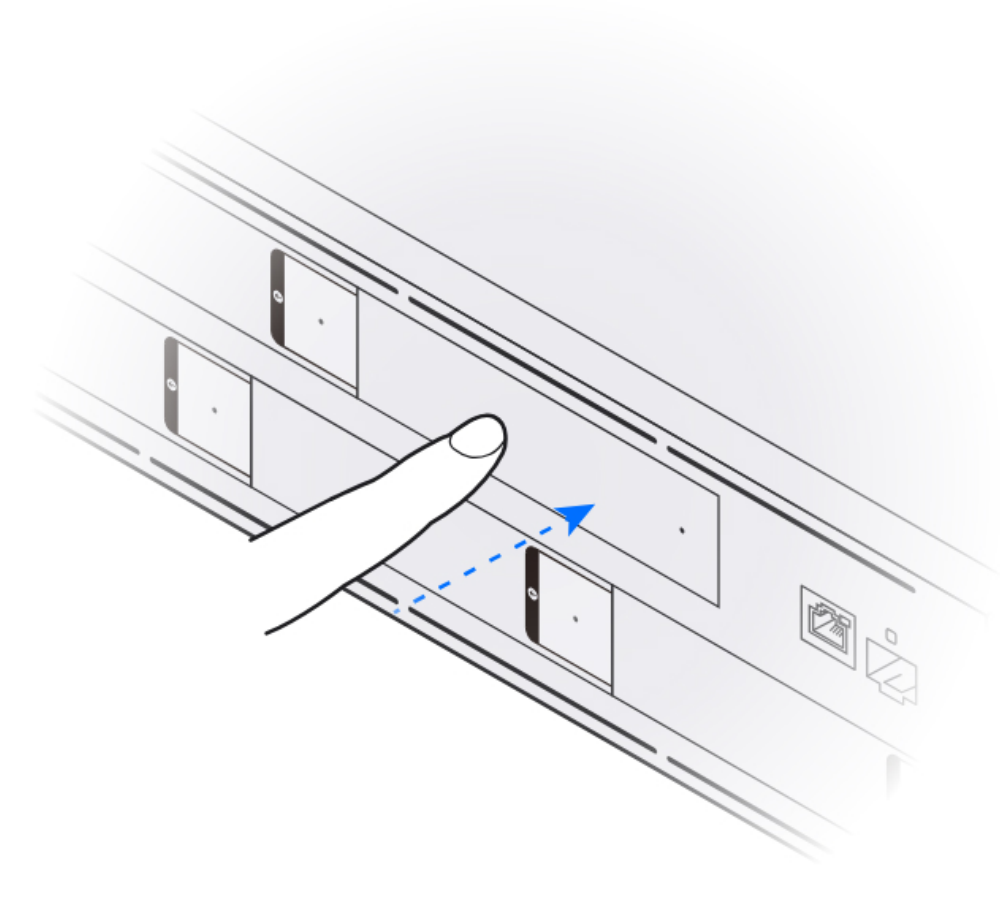

7

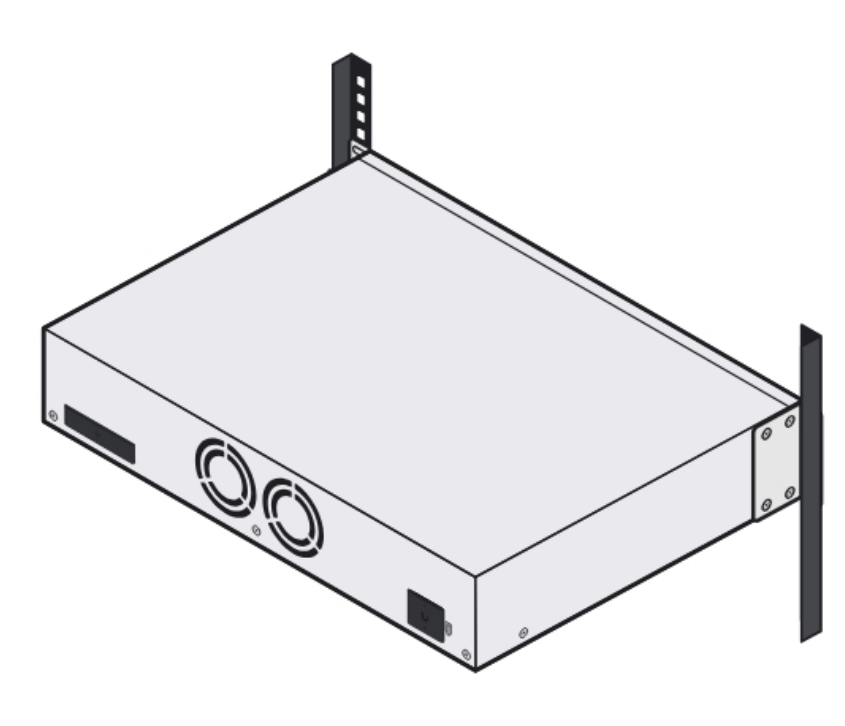

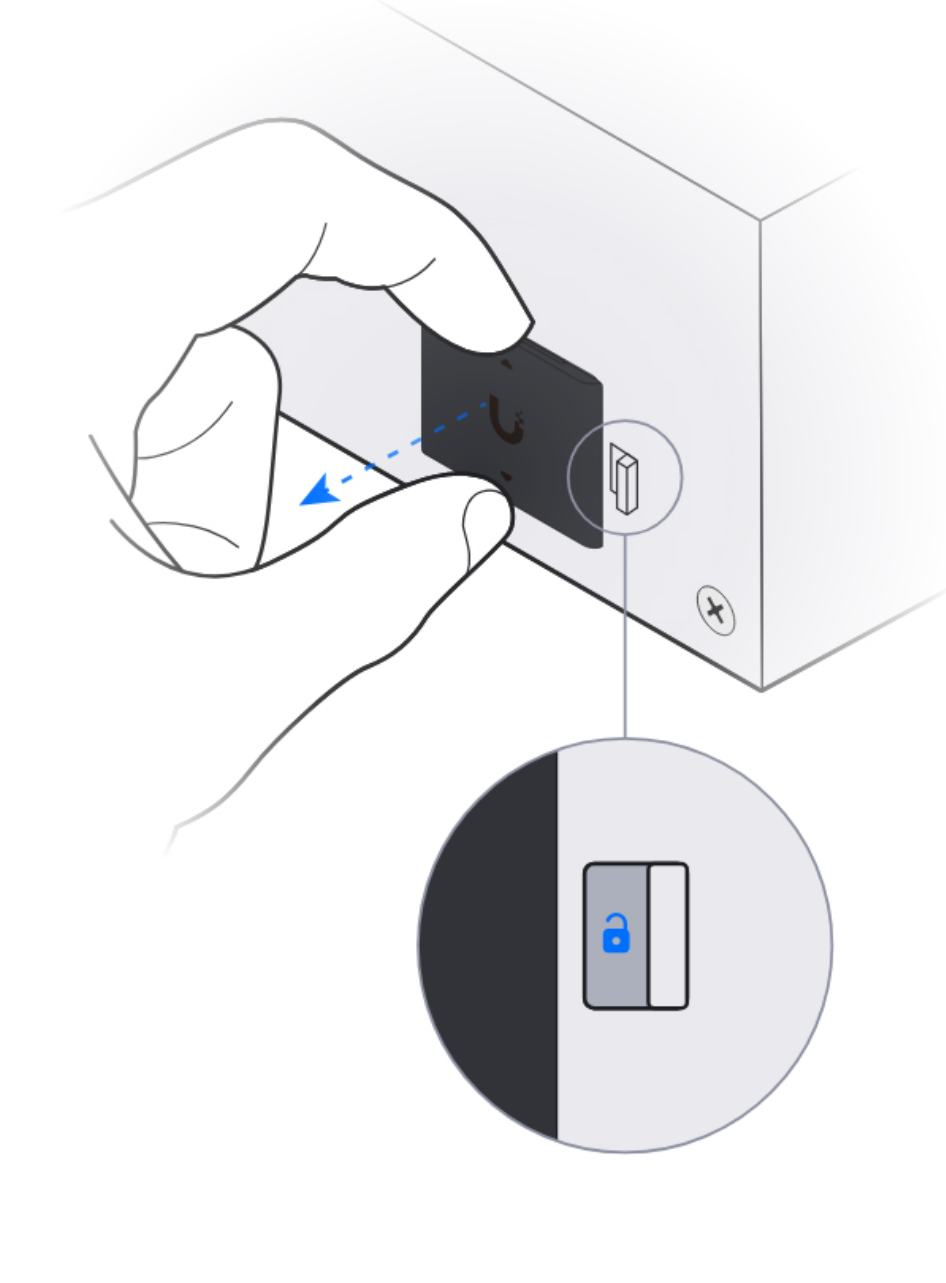

8

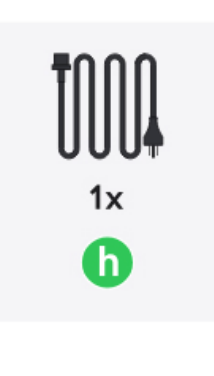

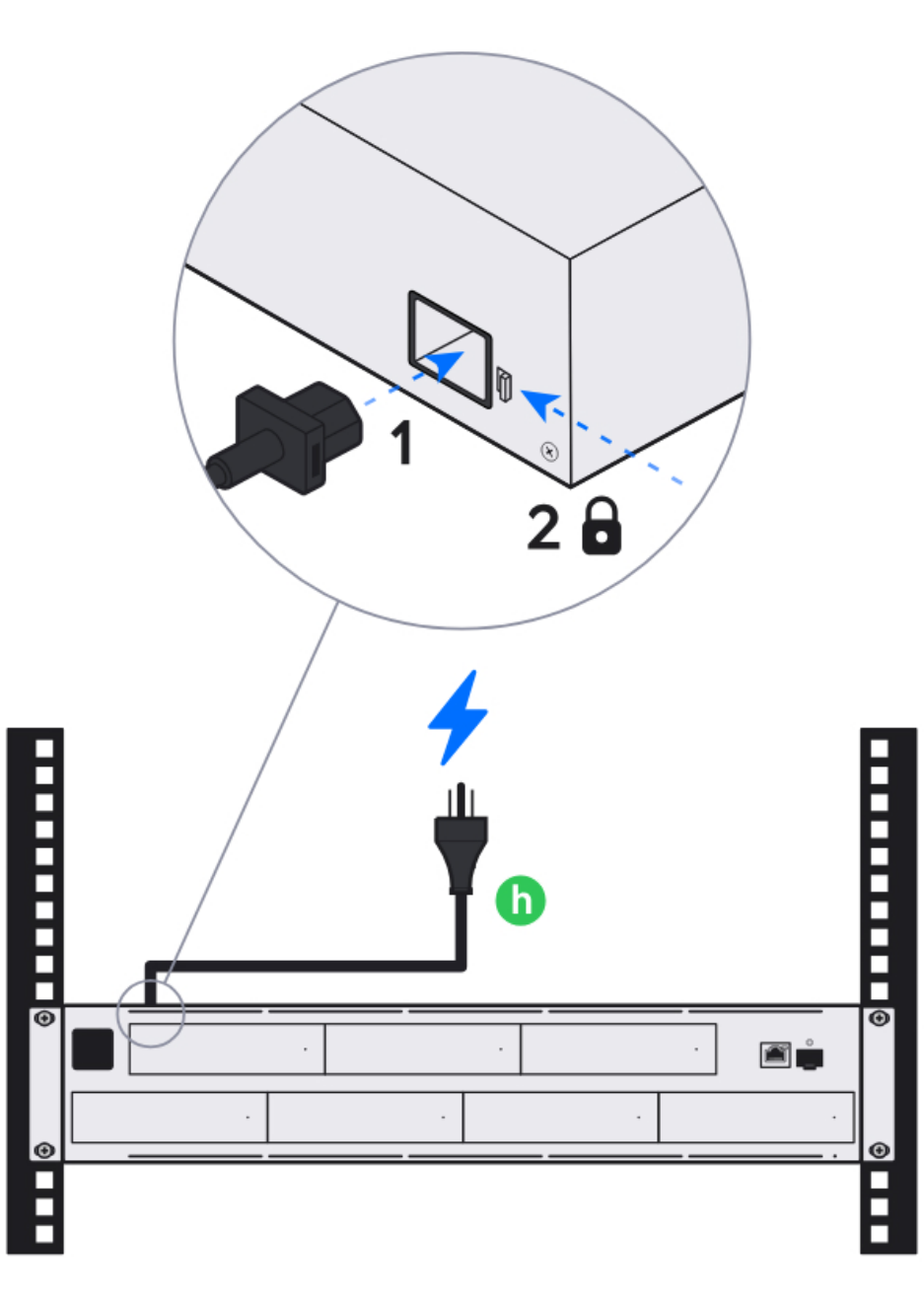

9

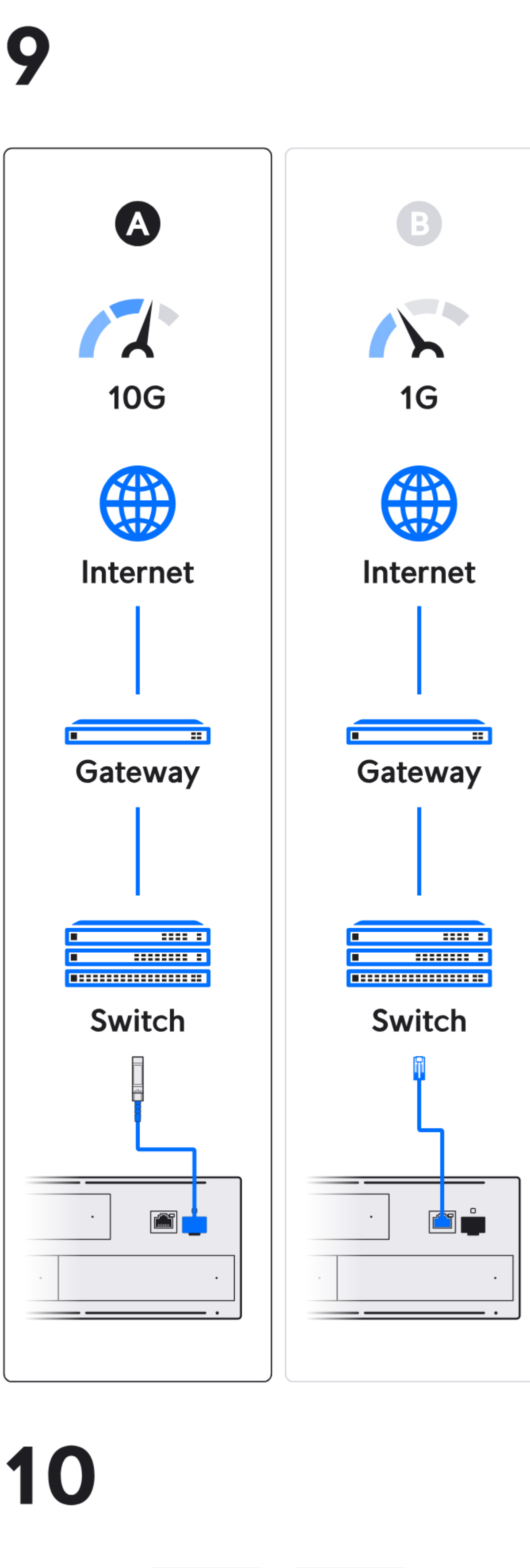
A
10G
Internet
Gateway
Switch
B
1G
Internet
Gateway
Switch

10

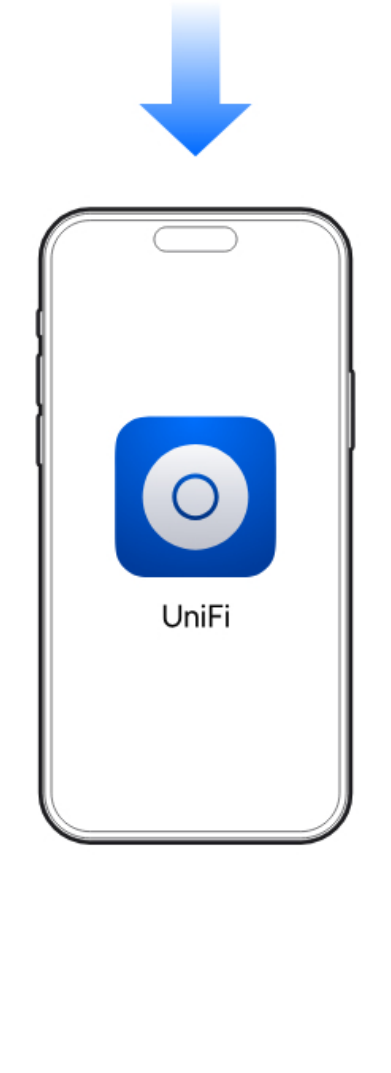
Download on the App Store
GET IT ON Google Play
UniFi

11

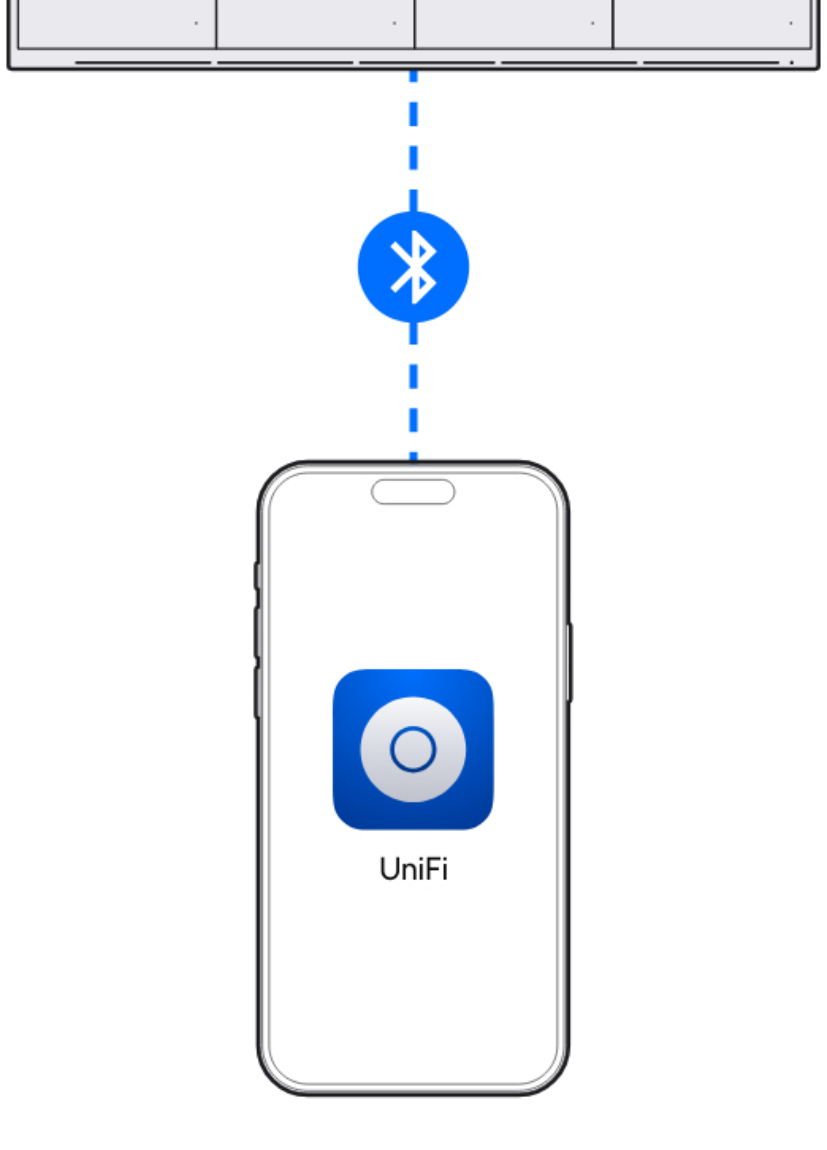

If you need further assistance, visit our Help Center or contact Ubiquiti Support.

©2019-2021 Ubiquiti Inc. All rights reserved. Ubiquiti, Ubiquiti Networks, the Ubiquiti U logo, UniFi, UniFi Protect, and UniFi SmartPower are trademarks or registered trademarks of Ubiquiti Inc. in the United States and in other countries. App Store and the Apple logo are trademarks of Apple Inc., registered in the U.S. and other countries. Google Play and the Google Play logo are trademarks of Google LLC. All other trademarks are the property of their respective owners.