MP72 Scanner Scale

Integrator Guide

ZEBRA

MN-004870-06EN Rev. A

2025/07/24

ZEBRA and the stylized Zebra head are trademarks of Zebra Technologies Corporation, registered in many jurisdictions worldwide. All other trademarks are the property of their respective owners. ©2025 Zebra Technologies Corporation and/or its affiliates. All rights reserved.

Information in this document is subject to change without notice. The software described in this document is furnished under a license agreement or nondisclosure agreement. The software may be used or copied only in accordance with the terms of those agreements.

For further information regarding legal and proprietary statements, please go to:

SOFTWARE: zebra.com/informationpolicy.
COPYRIGHTS: zebra.com/copyright.
PATENTS: ip.zebra.com.
WARRANTY: zebra.com/warranty.
END USER LICENSE AGREEMENT: zebra.com/eula.

Terms of Use

Proprietary Statement

This manual contains proprietary information of Zebra Technologies Corporation and its subsidiaries (“Zebra Technologies”). It is intended solely for the information and use of parties operating and maintaining the equipment described herein. Such proprietary information may not be used, reproduced, or disclosed to any other parties for any other purpose without the express, written permission of Zebra Technologies.

Product Improvements

Continuous improvement of products is a policy of Zebra Technologies. All specifications and designs are subject to change without notice.

Liability Disclaimer

Zebra Technologies takes steps to ensure that its published Engineering specifications and manuals are correct; however, errors do occur. Zebra Technologies reserves the right to correct any such errors and disclaims liability resulting therefrom.

Limitation of Liability

In no event shall Zebra Technologies or anyone else involved in the creation, production, or delivery of the accompanying product (including hardware and software) be liable for any damages whatsoever (including, without limitation, consequential damages including loss of business profits, business interruption, or loss of business information) arising out of the use of, the results of use of, or inability to use such product, even if Zebra Technologies has been advised of the possibility of such damages. Some jurisdictions do not allow the exclusion or limitation of incidental or consequential damages, so the above limitation or exclusion may not apply to you.

Contents

About This Guide **8**
Configurations 8
Notational Conventions 12
Icon Conventions 12
Service Information 13

Getting Started **14**
Features Summary 15
MP72 Scanner Scale Features 16
MP72 Scanner Scale Related Hardware 21
Scan Windows 21
Platter 21
Scale (Scanner/Scale Configurations Only) 21
Scale Displays (Scanner/Scale Configurations Only) 21
Weight Guard 22
Peripherals 23
Customer Facing Scanner 23
Auxiliary Hand-held Scanner 23
EAS Devices 23
Scale Devices 24
USB Flash Drives 24
Related Product Line Configurations 24

Host Interfaces and Cable Pinouts **25**
Interfaces, Components, and Communication 25

USB Connections Interface....27
USB Connection Methods....27
Setting up the MP72....28
USB Device Type....28
RS-232 Connections Interface....30
MP72 Scanner Only or MP72 Scale with Single Cable Protocol....30
Price Computational Scale Interface Circuit Drawing....32
Connecting to an RS-232 Host....32
Models with a Dual Cable Scanner/Scale....32
RS-232 Host Parameters....33
Third-Party Scale Parameters....45
IBM RS-485 Interface....47
Setting up the MP72 with IBM RS-485....47
IBM RS-485 Host Parameters....48
Connector Pins....50

Site Preparation and Installation....54
Site Preparation....54
Ventilation and Spacing Requirements....55
Service Access Requirements....56
Electrical Power Considerations....56
Checkstand Preparation....57
Installation Process....59
Installing Components....59
Removing Existing Scanner Scale and Accessories....60
Unpacking MP72 Scanner Scale Equipment....60
Scale Display....62
Installing the Customer Facing Scanner....66
EAS Devices....73
Installing the Optional Trim Kit....76
MP72 Scanner Scale Installation....77
Checkstand Counter Cutouts and MP72 Dimensions....77
Installing the MP72 Scanner Scale....85
Cables and Connections....89

Scale Calibration **90**
Scale Configurations 90
Scale Calibration Notes 91
Calibrating the Scale 91
Enter Calibration Mode 91
Program Legal Parameters 92
Calibration at NO LOAD 93
Calibration at LOAD 94
Calibration Success or Failure 96
Calibration Mode Exit Conditions 97
Verification Test 97
Audit Tallies 100
Scale Configuration Parameters 101
Legal Scale Units 101
Scale Display Configuration 102
Legal Scale Dampening Filter Setting 103
Third-Party Scale Weight Guard Beam Break Pin Polarity 103
User Interface Indications for Scale 104

Weight Guard Configuration **108**
Weight Guard Enable 108
Weight Guard Calibration 109
Weight Guard Calibration Health Check 109
Calibration Warning 109
Calibration Error 109
Field Re-calibration 109
Field Re-calibration For Third Party Scales 110
Re-calibration Indications for Third Party Scales 110
Cleaning the Weight Guard 111
Weight Guard User Interface Indications 112
Weight Guard User Interface Indications for Third Party Scales 112

MP72 EDGE **114**

MP72 EDGE Cabling....115
MP72 EDGE Status Light....116

Programming....117
Programming Management Tools....117
Application Programming Interfaces....117
Programming Barcodes....118
USB Staging Flash Drive....118
MP72 Menu Structure for the USB Staging Flash Drive....118
Manually Staging/Configuring MP72 Devices....119
123Scan Staging Flash Drive Configuration....121
Approved USB Flash Drives....121

123Scan and Software Tools....122
123Scan....122
Communication with 123Scan....123
123Scan Requirements....123
123Scan Information....123
Scanner SDK, Other Software Tools, and Videos....124

Operating the Scanner....125
Controls and Indicators....125
User Feedback Light Indicator....125
Diagnostic LED/7-segment Display....126
Front Panel Buttons....127
Identifying Firmware Version....129
Operating Modes....129
Scanning....129
Weighing Items....131
Platter....132
Removing the Short or Medium Platter....132
Installing the Short or Medium Platter....133
Removing the Long Platter....134

Installing the Long Platter....135
Electronic Article Surveillance (EAS)....136
Supported EAS Controllers....136
EAS Operating Modes and Settings....136
Checkpoint Controller....137
Sensormatic Controller....137
Speaker and LED Conditions....138

Maintenance, Troubleshooting, and Error Codes....142
Maintenance....142
Troubleshooting....142
Diagnostic LED 7-segment Display - Error and Warning Codes....142
Troubleshooting Assistance....143
General Error and Warning Codes....144
Scale Warning Codes....144
Weight Guard Warning Codes....148

Technical Specifications....149

ASCII Character Sets....153

Communication Protocol Functionality....163
Functionality Supported via Communication (Cable) Interface....163

About This Guide

This guide provides information about installing, operating, and programming the MP72 Scanner Scale.

Configurations

The MP72 is available in a variety of configurations.

Table 1 MP72 Scanner Scale Configurations

Number	Description
MP7200-LND0L000WW	LONG, NO SCALE, DLC GLASS, COLOR CAMERA, WORLDWIDE
MP7200-LND0N000WW	LONG, NO SCALE, DLC GLASS, WORLDWIDE
MP7200-LNS0L000WW	LONG, NO SCALE, SAPPHIRE GLASS, COLOR CAMERA, WORLDWIDE
MP7200-LNS0N000WW	LONG, NO SCALE, SAPPHIRE GLASS, WORLDWIDE
MP7200-LPS0L000WW	LONG, NO SCALE, DL PARSING, COLOR CAMERA, SAPPHIRE GLASS, WORLDWIDE
MP7200-LPS0N000WW	LONG, NO SCALE, DL PARSING, SAPPHIRE GLASS, WORLDWIDE
MP7200-MND0L000WW	MEDIUM, NO SCALE, DLC GLASS, COLOR CAMERA, WORLDWIDE
MP7200-MND0N000WW	MEDIUM, NO SCALE, DLC GLASS, WORLDWIDE
MP7200-MNDLL000WW	MEDIUM, SCALE READY, COLOR CAMERA, DLC GLASS, WORLDWIDE
MP7200-MNDLN000WW	MEDIUM, SCALE READY, DLC GLASS, WORLDWIDE
MP7200-MNS0L000WW	MEDIUM, NO SCALE, SAPPHIRE GLASS, COLOR CAMERA, WORLDWIDE
MP7200-MNS0N000WW	MEDIUM, NO SCALE, SAPPHIRE GLASS, WORLDWIDE
MP7200-MNSLL000WW	MEDIUM, SCALE READY, COLOR CAMERA, SAPPHIRE GLASS, WORLDWIDE

Table 1 MP72 Scanner Scale Configurations (Continued)

Number	Description
MP7200-MNSLN000WW	MEDIUM, SCALE READY, SAPPHIRE GLASS, WORLDWIDE
MP7200-MPS0L000WW	MEDIUM, NO SCALE, DL PARSING, COLOR CAMERA, SAPPHIRE GLASS, WORLDWIDE
MP7200-MPS0N000WW	MEDIUM, NO SCALE, DL PARSING, SAPPHIRE GLASS, WORLDWIDE
MP7200-SND0L000WW	SHORT, NO SCALE, DLC GLASS, COLOR CAMERA, WORLDWIDE
MP7200-SND0N000WW	SHORT, NO SCALE, DLC GLASS, WORLDWIDE
MP7200-SNS0L000WW	SHORT, NO SCALE, SAPPHIRE GLASS, COLOR CAMERA, WORLDWIDE
MP7200-SNS0N000WW	SHORT, NO SCALE, SAPPHIRE GLASS, WORLDWIDE
MP7200-SPS0L000WW	SHORT, NO SCALE, DL PARSING, COLOR CAMERA, SAPPHIRE GLASS, WORLDWIDE
MP7200-SPS0N000WW	SHORT, NO SCALE, DL PARSING, SAPPHIRE GLASS, WORLDWIDE
MP7201-LNDLL000AU	LONG, SINGLE INTERVAL SCALE,COLOR CAMERA, DLC GLASS, AUSTRALIA
MP7201-LNDLL000CM	LONG, SINGLE INTERVAL SCALE, COLOR CAMERA, DLC GLASS, CANADA/MEXICO
MP7201-LNDLL000EU	LONG, SINGLE INTERVAL SCALE, DLC GLASS, COLOR CAMERA, EUROPE
MP7201-LNDLL000NN	LONG, SINGLE INTERVAL SCALE,DLC GLASS, COLOR CAMERA, OIML
MP7201-LNDLL000US	LONG, SINGLE INTERVAL SCALE, DLC GLASS, COLOR CAMERA, UNITED STATES
MP7201-LNDLN000AU	LONG, SINGLE INTERVAL SCALE, DLC GLASS, AUSTRALIA
MP7201-LNDLN000CM	LONG, SINGLE INTERVAL SCALE, DLC GLASS, CANADA/MEXICO
MP7201-LNDLN000EU	LONG, SINGLE INTERVAL SCALE, DLC GLASS, EUROPE
MP7201-LNDLN000US	LONG, SINGLE INTERVAL SCALE, DLC GLASS, UNITED STATES
MP7201-LNDLN000NN	LONG, SINGLE INTERVAL SCALE, DLC GLASS, OIML
MP7201-LNDWL000NN	SCALE,LONG, DLC,SINGLE INTERVAL, COLOR CAMERA, WEIGHT GUARD, OIML
MP7201-LNSLL000AU	LONG, SINGLE INTERVAL SCALE, COLOR CAMERA,SAPPHIRE GLASS, AUSTRALIA
MP7201-LNSLL000CM	LONG, SINGLE INTERVAL SCALE, COLOR CAMERA,SAPPHIRE GLASS, CANADA/MEXICO
MP7201-LNSLL000US	LONG, SINGLE INTERVAL SCALE, SAPPHIRE GLASS, COLOR CAMERA, UNITED STATES
MP7201-LNSLL000EU	LONG, SINGLE INTERVAL SCALE, SAPPHIRE GLASS, COLOR CAMERA, EUROPE
MP7201-LNSLN000AU	LONG, SINGLE INTERVAL SCALE, SAPPHIRE GLASS, AUSTRALIA

Table 1 MP72 Scanner Scale Configurations (Continued)

Number	Description
MP7201-LNSLN000CM	LONG, SINGLE INTERVAL SCALE, SAPPHIRE GLASS, CANADA/MEXICO
MP7201-LNSLN000NN	LONG, SINGLE INTERVAL SCALE, SAPPHIRE GLASS, OIML
MP7201-LNSLN000US	LONG, SINGLE INTERVAL SCALE, SAPPHIRE GLASS, UNITED STATES
MP7201-LNSLN000EU	LONG, SINGLE INTERVAL SCALE, SAPPHIRE GLASS, EUROPE
MP7201-LPSLL000US	LONG, SINGLE INTERVAL SCALE, DRIVERS LICENSE PARSING, SAPPHIRE GLASS, COLOR CAMERA, UNITED STATES
MP7201-LPSLN000US	LONG, SINGLE INTERVAL SCALE, DRIVERS LICENSE PARSING, SAPPHIRE GLASS, UNITED STATES
MP7201-LPSWL000US	LONG, SINGLE INTERVAL SCALE, DRIVERS LICENSE PARSING, SAPPHIRE GLASS, COLOR CAMERA,WEIGHT GUARD, UNITED STATES
MP7201-LPSWN000US	LONG, SINGLE INTERVAL SCALE, DRIVERS LICENSE PARSING, SAPPHIRE GLASS, WEIGHT GUARD, UNITED STATES
MP7201-MNDLL000AU	MEDIUM, SINGLE INTERVAL SCALE, COLOR CAMERA, DLC GLASS, AUSTRALIA
MP7201-MNDLL000CM	MEDIUM, SINGLE INTERVAL SCALE, COLOR CAMERA, DLC GLASS, CANADA/MEXICO
MP7201-MNDLL000EU	MEDIUM, SINGLE INTERVAL SCALE, DLC GLASS, COLOR CAMERA, EUROPE
MP7201-MNDLL000NN	MEDIUM, SINGLE INTERVAL SCALE, DLC GLASS, COLOR CAMERA, OIML
MP7201-MNDLL000RU	MEDIUM, SINGLE INTERVAL SCALE, COLOR CAMERA, DLC GLASS, RUSSIA
MP7201-MNDLL000US	MEDIUM, SINGLE INTERVAL SCALE, DLC GLASS, COLOR CAMERA, UNITED STATES
MP7201-MNDLN000AU	MEDIUM, SINGLE INTERVAL SCALE, DLC GLASS, AUSTRALIA
MP7201-MNDLN000CM	MEDIUM, SINGLE INTERVAL SCALE, DLC GLASS, CANADA/MEXICO
MP7201-MNDLN000EU	MEDIUM, SINGLE INTERVAL SCALE, DLC GLASS, EUROPE
MP7201-MNDLN000NN	MEDIUM, SINGLE INTERVAL SCALE, DLC GLASS, OIML
MP7201-MNDLN000RU	MEDIUM, SINGLE INTERVAL SCALE, DLC GLASS, RUSSIA
MP7201-MNDLN000US	MEDIUM, SINGLE INTERVAL SCALE, DLC GLASS, UNITED STATES
MP7201-MNSLL000AU	SCNR, MP7201: MEDIUM, SINGLE INTERVAL SCALE, COLOR CAMERA, SAPPHIRE GLASS, AUSTRALIA
MP7201-MNSLL000CM	SCNR, MP7201: MEDIUM, SINGLE INTERVAL SCALE, COLOR CAMERA, SAPPHIRE GLASS, CANADA/MEXICO
MP7201-MNSLL000EU	SCNR, MP7201: MEDIUM, SINGLE INTERVAL SCALE, SAPPHIRE GLASS, COLOR CAMERA, EUROPE
MP7201-MNSLL000NN	SCNR, MP7201: MEDIUM, SINGLE INTERVAL SCALE, SAPHIRE GLASS, COLOR CAMERA, OIML
MP7201-MNSLL000RU	SCNR, MP7201: MEDIUM, SINGLE INTERVAL SCALE, COLOR CAMERA, SAPPHIRE GLASS, RUSSIA
MP7201-MNSLL000US	SCNR, MP7201: MEDIUM, SINGLE INTERVAL SCALE, SAPPHIRE GLASS, COLOR CAMERA, UNITED STATES

Table 1 MP72 Scanner Scale Configurations (Continued)

Number	Description
MP7201-MNSLN000AU	SCNR, MP7201: MEDIUM, SINGLE INTERVAL SCALE, SAPPHIRE GLASS, AUSTRALIA
MP7201-MNSLN000CM	SCNR, MP7201: MEDIUM, SINGLE INTERVAL SCALE, SAPPHIRE GLASS, CANADA/MEXICO
MP7201-MNSLN000EU	SCNR, MP7201: MEDIUM, SINGLE INTERVAL SCALE, SAPPHIRE GLASS, EUROPE
MP7201-MNSLN000NN	SCNR, MP7201: MEDIUM, SINGLE INTERVAL SCALE, SAPPHIRE GLASS, OIML
MP7201-MNSLN000RU	SCNR, MP7201: MEDIUM, SINGLE INTERVAL SCALE, SAPPHIRE GLASS, RUSSIA
MP7201-MNSLN000US	SCNR, MP7201: MEDIUM, SINGLE INTERVAL SCALE, SAPPHIRE GLASS, UNITED STATES
MP7201-MNSWL000EU	SCNR, MP7201: MEDIUM, SINGLE INTERVAL SCALE, SAPPHIRE GLASS, WEIGHT GUARD, COLOR CAMERA, EUROPE
MP7201-MNSWN000EU	SCNR, MP7201: MEDIUM, SINGLE INTERVAL SCALE, SAPPHIRE GLASS,WEIGHT GUARD, EUROPE
MP7201-MPSLL000US	SCNR, MP7201: MEDIUM, SINGLE INTERVAL SCALE, DRIVERS LICENSE PARSING, SAPPHIRE GLASS, COLOR CAMERA, UNITED STATES
MP7201-MPSLN000US	SCNR, MP7201: MEDIUM, SINGLE INTERVAL SCALE, DRIVERS LICENSE PARSING, SAPPHIRE GLASS, UNITED STATES
MP7201-MPSWL000US	SCNR, MP7201: MEDIUM, SINGLE INTERVAL SCALE, DRIVERS LICENSE PARSING, SAPPHIRE GLASS, COLOR CAMERA, WEIGHT GUARD, UNITED STATES
MP7202-LNDWL000NN	SCNR, SCALE, LONG, DLC, DUAL INTERVAL, COLOR CAMERA, WEIGHT GUARD, OIML
MP7202-LNDWL000US	SCNR, SCALE, LONG, DLC, DUAL INTERVAL, COLOR CAMERA, WEIGHT GUARD, UNITED STATES/PUERTO RICO
MP7202-MNDLL000EU	SCNR, MP7202: MEDIUM, DUAL INTERVAL SCALE, DLC GLASS, COLOR CAMERA, EUROPE
MP7202-MNDLL000RU	SCNR, MP7201: MEDIUM, DUAL INTERVAL SCALE,COLOR CAMERA, DLC GLASS, RUSSIA
MP7202-MNDLN000RU	SCNR, MP7201: MEDIUM, DUAL INTERVAL SCALE, DLC GLASS, RUSSIA
MP7202-MNSLL000EU	SCNR, MP7202: MEDIUM,DUAL INTERVAL SCALE, SAPPHIRE GLASS, COLOR CAMERA, EUROPE
MP7202-MNSLL000RU	SCNR, MP7201: MEDIUM, DUAL INTERVAL SCALE, COLOR CAMERA,SAPPHIRE GLASS, RUSSIA
MP7202-MNSLN000RU	SCNR, MP7201: MEDIUM, DUAL INTERVAL SCALE, SAPPHIRE GLASS, RUSSIA
MP7203-LNDWL000NN	SCNR, SCALE, LONG, DLC, SINGLE INTERVAL WITH CALIBRATION SWITCH, COLOR CAMERA, WEIGHT GUARD, OIML
MP7204-MNDWV000NN	SCNR, MP7200: MEDIUM, DUAL INTERVAL WITH CALIBRATION SWITCH, DLC GLASS, COLOR CAMERA, WEIGHT GUARD, SINGLE BOARD COMPUTER, WORLDWIDE

NOTE:

1. EU scales are legally accepted in the following countries: Austria, Belgium, Bulgaria, Croatia, Cyprus, Czech Republic, Denmark, Estonia, Finland, France, Germany, Greece, Hungary, Ireland, Iceland, Italy, Liechtenstein, Lithuania, Luxembourg, Latvia, Malta, Netherlands, Norway, Poland, Portugal, Romania, Slovak Republic, Slovenia, Spain, Sweden, Switzerland, and United Kingdom
2. OIML scales are legally accepted in the following countries: Bahamas, Barbados, Belize, Bermuda, Chile, Colombia, Costa Rica, Ecuador, El Salvador, Guatemala, Hong Kong, Jamaica, Saint Lucia, Panama, Peru, Philippines, Thailand, Trinidad, and Tobago
3. The color camera configuration type is noted by an L in the fifth digit after the dash. For example, MP7200-LND0L000WW.

Notational Conventions

The following notational conventions make the content of this document easy to navigate.

- **Bold** text is used to highlight the following:
  - Dialog box, window, and screen names
  - Dropdown list and list box names
  - Checkbox and radio button names
  - Icons on a screen
  - Key names on a keypad
  - Button names on a screen
- Bullets (•) indicate:
  - Action items
  - List of alternatives
  - Lists of required steps that are not necessarily sequential
- Sequential lists (for example, those that describe step-by-step procedures) appear as numbered lists.

Icon Conventions

The documentation set is designed to give the reader more visual clues. The following visual indicators are used throughout the documentation set.

NOTE: The text here indicates information that is supplemental for the user to know and that is not required to complete a task.

IMPORTANT: The text here indicates information that is important for the user to know.

CAUTION: If the precaution is not heeded, the user could receive a minor or moderate injury.

WARNING: If danger is not avoided, the user CAN be seriously injured or killed.

DANGER: If danger is not avoided, the user WILL be seriously injured or killed.

Service Information

If you have a problem with your equipment, contact Zebra Global Customer Support for your region. Contact information is available at: zebra.com/support.

When contacting support, please have the following information available:

- Serial number of the unit
- Model number or product name
- Software/firmware type and version number

Zebra responds to calls by email, telephone, or fax within the time limits set forth in support agreements.

If your problem cannot be solved by Zebra Customer Support, you may need to return your equipment for servicing and will be given specific directions. Zebra is not responsible for any damages incurred during shipment if the approved shipping container is not used. Shipping the units improperly can possibly void the warranty.

If you purchased your Zebra business product from a Zebra business partner, contact that business partner for support.

Getting Started

The MP72 Scanner Scale is a data capture solution that reads 1D, 2D, and mobile barcodes in all orientations. Barcode data is transmitted to a Point-Of-Sale (POS) host via USB, RS-232, or RS-485. Auxiliary device support includes USB and RS-232 hand-held scanners, Checkpoint and Sensormatic Electronic Article Surveillance (EAS), scale and optional Scale Display (varies with the model), and USB staging flash drive (memory stick).

The MP72 is embedded in a retail checkstand cutout. Features include:

- Support for 1D, 2D (for example, PDF, Aztec), and mobile barcodes (cell phone) in all orientations
  - Reads top-bottom, left-right, and cashier-customer side barcodes
  - Omni-directional symbol orientation
- User interface (LED indicators, touch controls, audio)
- High swipe speed for increased throughput
- Aggressive scanning performance on high-density, truncated, and poorly printed barcodes
- Scanner Management Service (SMS) and 123Scan support enable remote configuration and monitoring of attached peripherals
- Optional integrated scale (single/dual interval)
- Optional Scale Display (single/dual head) for scale installations
- Optional Weight Guard for scale installations
- Optional integrated Customer Facing Scanner (CFS) supporting 1D and 2D barcodes
- Auxiliary scanner support (USB and RS-232)
- Optional color camera
- Optional Checkpoint EAS antenna
- Support for low inductance Sensormatic EAS coil

Features Summary

The following table provides brief MP72 feature descriptions.

Table 2 MP72 Scanner Scale Features

Feature	Description
Diagnostic LED/7-segment Display	Internal display provides detailed status, troubleshooting information, and scale legal parameters during calibration.
User Feedback Light Indicator	Provides visual feedback for system status and alerts.
Scale Zero Button	Scale status LED and touch button provides scale status, and allows user to zero the scale.
Volume/Tone Control Button	User selectable settings for audible system indications (Status LED and button).
EAS Deactivation Button (Sensormatic only)	Indicates the state of the Sensormatic EAS device, and controls manual deactivation (optional).
Color Camera Connection LED	When green, verifies that the MP72 color camera is on. Disconnecting/connecting the USB cable causes the device to beep and toggle the LED (up to a 10 second delay).
Camera Activation Button	Allows an operator to take a picture.
Platter	Stainless steel surface for weighing items and scanning barcodes via the horizontal and vertical imaging windows.
Scale (Optional/Scanner Scale Configurations Only)	Available for medium and long length configurations.
Calibration Switch	Facilitates manual scale calibration.
Scale Display	Single or dual display option provides the weight of items on the scale.
Customer Facing Scanner	Mounts on either side of the MP72; used for scanning barcodes, coupons, and loyalty cards from customers' mobile phones and paper.
Weight Guard	Off-platter detection system. Triggers an alert when an item being weighed blocks the signal.
Leveling Screws (medium and short configurations only)	Standard length leveling screws ship with all short and medium configurations. Longer length screws are available as an accessory.
Connectors	Connect the MP72 to peripherals and POS/host.
Internal USB Cap/Port	Located under the platter.
EAS Cable Channel	Cable routing channel for EAS antenna.
Scale Cable Channel	Cable routing channel for the scale cable.
Drainage/Ventilation Holes	Outlet for spills.

MP72 Scanner Scale Features

The following images illustrate MP72 features. The medium configuration is shown.

Figure 1 Front View

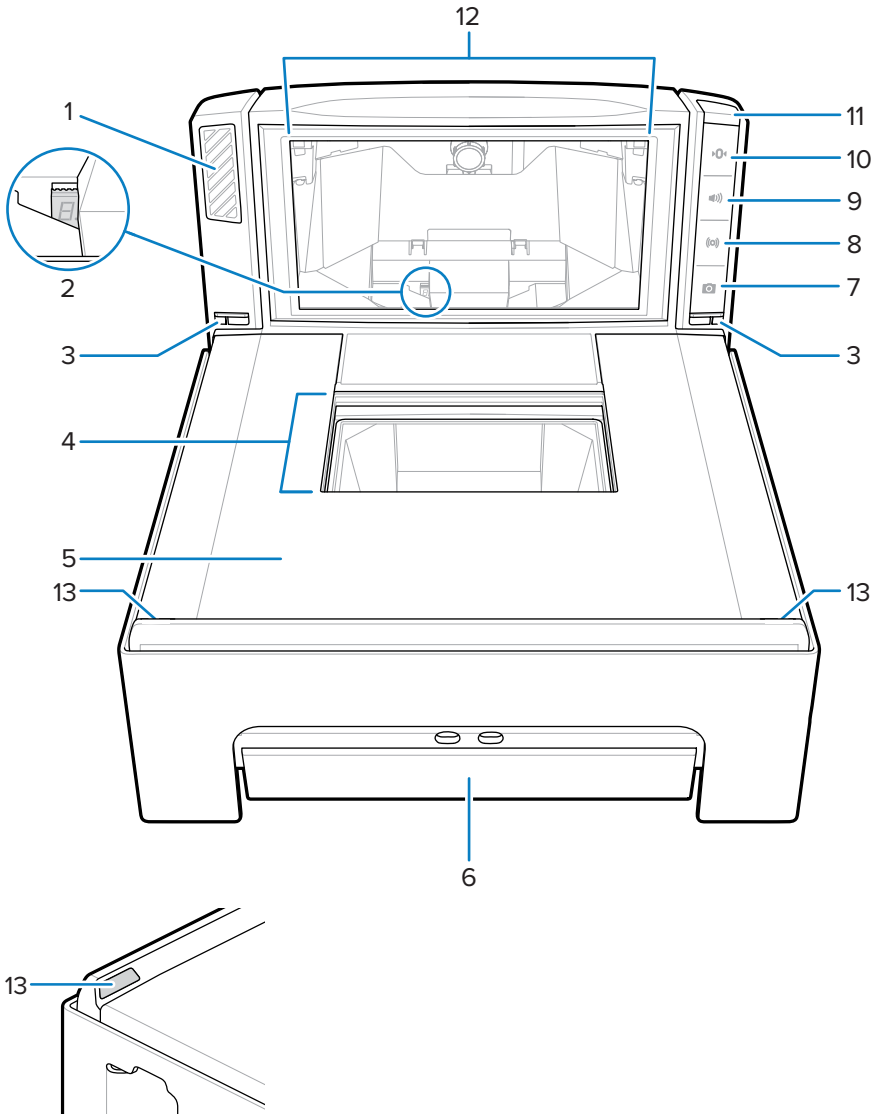

Item	Description
1	Speaker
2	7-segment display
3	Weight Guard indicator LEDs (2)
4	Horizontal scan window
5	Platter
6	Scale (optional)

Item	Description
7	Camera activation button
8	EAS deactivation button
9	Volume/Tone control button
10	Scale zero button
11	User feedback light indicator
12	Vertical scan window
13	Weight Guard retroreflectors

Figure 2 Left Side View

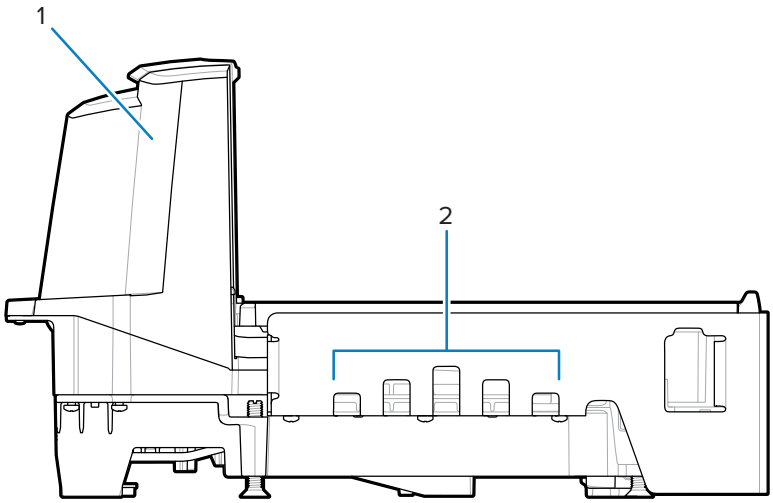

Item	Description
1	Tower (part of upper housing)
2	Drainage/Ventilation holes

Figure 3 Right Side View

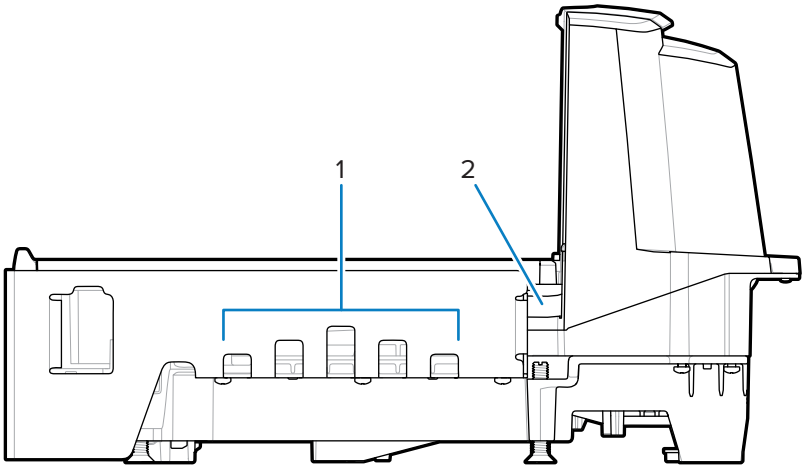

Item	Description
1	Drainage/Ventilation holes
2	EAS cable channel

Figure 4 Connector Ports

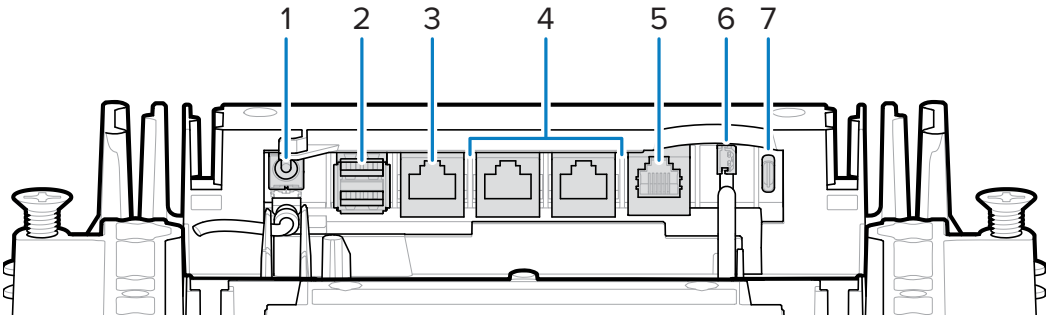

Item	Port	Description
1	12V DC (J1)	External power input. 12V / 3.33A (not required if powered from terminal). **NOTE:** If a power supply plug is inserted in the J1 connector with no voltage to the power supply, the scanner will not power up.
2	AUX A-B (J3)	Dual (stacked) USB 2.0 full speed ports for auxiliary USB scanners, CFS, or mass storage device **NOTE:** An additional USB port is available in the front under the platter.

Item	Port	Description
		All USB ports can be used for the USB staging flash drive. See Stacked USB Port table and USB Staging Flash Drive for more information.
3	POS (J2)	RJ45 port connecting MP72 to Point of Sale (POS) equipment (IBM, PC) via USB
4	RS-232 AUX 1 (J18) / AUX 2 (J5)	See the Auxiliary Connections table.
5	0.0 (J6)	Scale display
6	CKP I-LOCK (J4)	Checkpoint EAS interlock
7	USB type C (J17)	Color camera See the connector pins table Note for supported cables.

Figure 5 View Under Platter

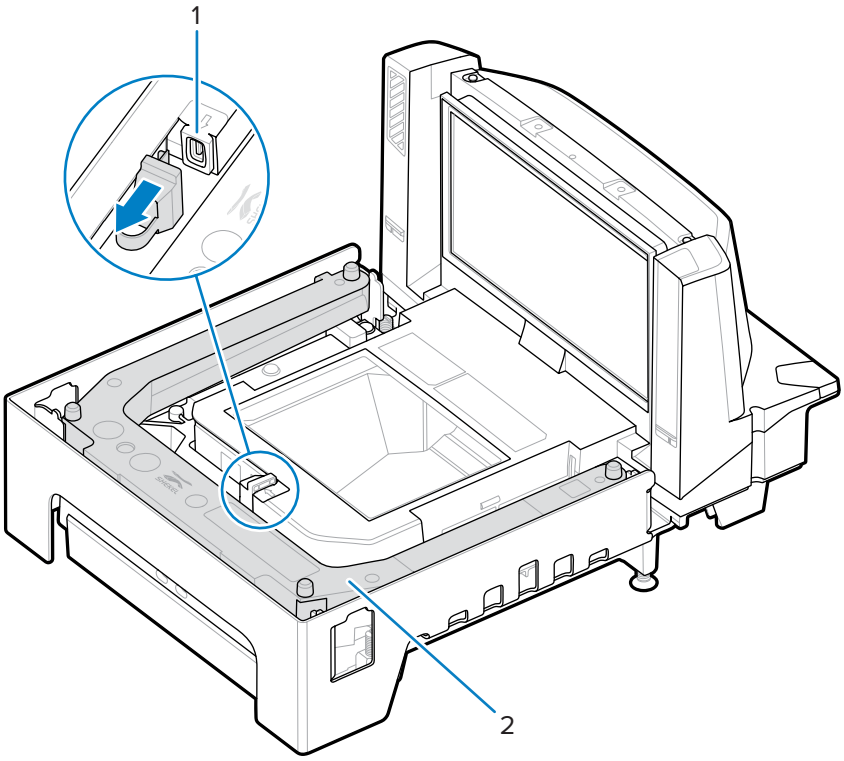

Item	Description
1	USB flash drive port
2	Optional scale (medium and long configurations only)

Figure 6 Leveling Screws (Short and Medium Configurations)

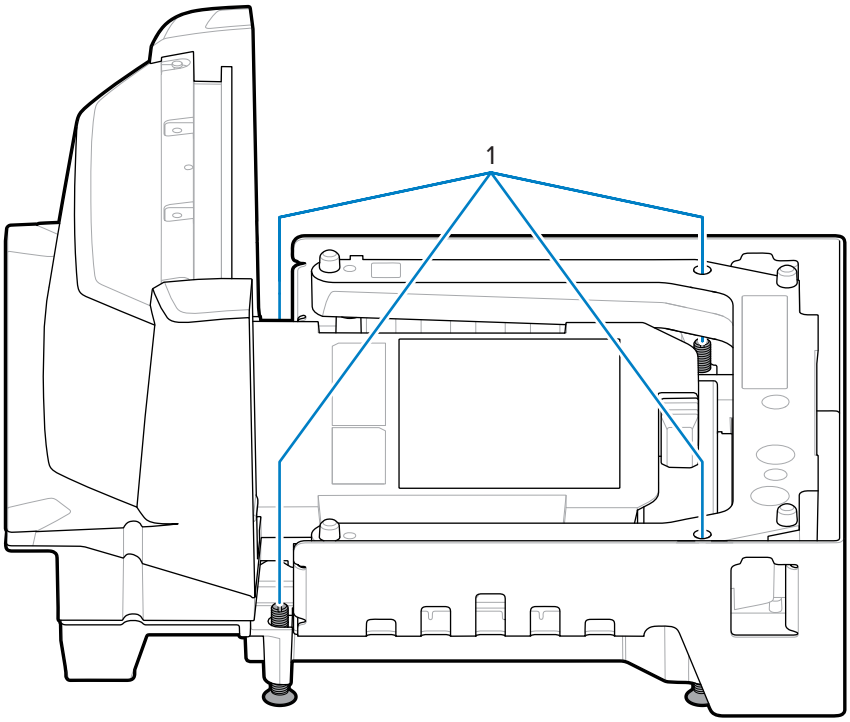

Item	Description
1	Leveling screws

NOTE: Leveling screw kit MX301-SR00004ZZWR is available as an optional accessory at additional cost. Kit MX302-SR00004ZZWR containing 20 mm (0.8 in.) longer leveling screws is available as an optional accessory at additional cost.

MP72 Scanner Scale Related Hardware

This section details MP72 hardware components.

Scan Windows

The MP72 reads 1D, 2D (for example, PDF, Aztec), and mobile barcodes (cell phone) in all orientations and scans difficult symbols (for example, truncated, poor contrast, and damaged barcodes).

The horizontal window on the platter is clear, scratch-proof sapphire built for long-term reliability and clarity and is impervious to scratches. The vertical window is chemically tempered and can sustain normal product impact. In case of abusive impact outside of normal usage, this window is laminated with anti-splinter film to ensure any glass shard remains intact on the window assembly.

See Scanning for more information.

Platter

The platter covers the horizontal scan window and scale (if applicable) and accommodates product placement. The sapphire platter glass is built for long-term reliability and clarity and is impervious to scratches except from industrial diamonds.

Scale (Scanner/Scale Configurations Only)

Scales are available for Medium and Long configurations only.

Two optional scales are available:

- Single Interval Range Scales have the same resolution for the entire weight range (from zero to maximum capacity) and the following weight capacity:
  - 0.00 - 30.00 lb at a resolution of 0.01 lb
  - 0.000 - 15.000 kg at a resolution of 0.005 kg
- Dual Interval Range Scales change resolution after a certain weight is reached. For example, 2g to 6kg, 5g above 6kg. Dual Interval weight capacity is:
  - 0.000 - 12.00 lb at a resolution of 0.005 lb; then 12.00 - 30.00 lb at a resolution of 0.01 lb
  - 0.000 - 6.000 kg at a resolution of 0.002 kg; then 6.000 - 15.000 kg at a resolution of 0.005 kg

Calibration Switch

Some countries require a mechanical calibration switch.

If the integrated scale has a calibration switch, see Manual Entry into Calibration Mode to enter Calibration Mode to calibrate the scale.

Scale Displays (Scanner/Scale Configurations Only)

MP72 scale configurations offer a single or dual Scale Display. The single display is positioned to provide continuous display of weight values and digital zero balance indication for the customer and operator. The dual display offers more flexibility by allowing two display heads to rotate independently. See Scale Display for more information.

Both single and dual displays show gross weight in pounds and/or kilograms (depending on location).

Weight Guard

Weight Guard is an off-platter detection system. An IR emitter/receiver pair (1) on each side of the MP72 tower views a retroreflector pair (2) at the far end of the platter and triggers a user indicator alert when an item being weighed blocks the signal.

See Weight Guard Configuration for information on setting up the Weight Guard.

Figure 7 Weight Guard Detection System

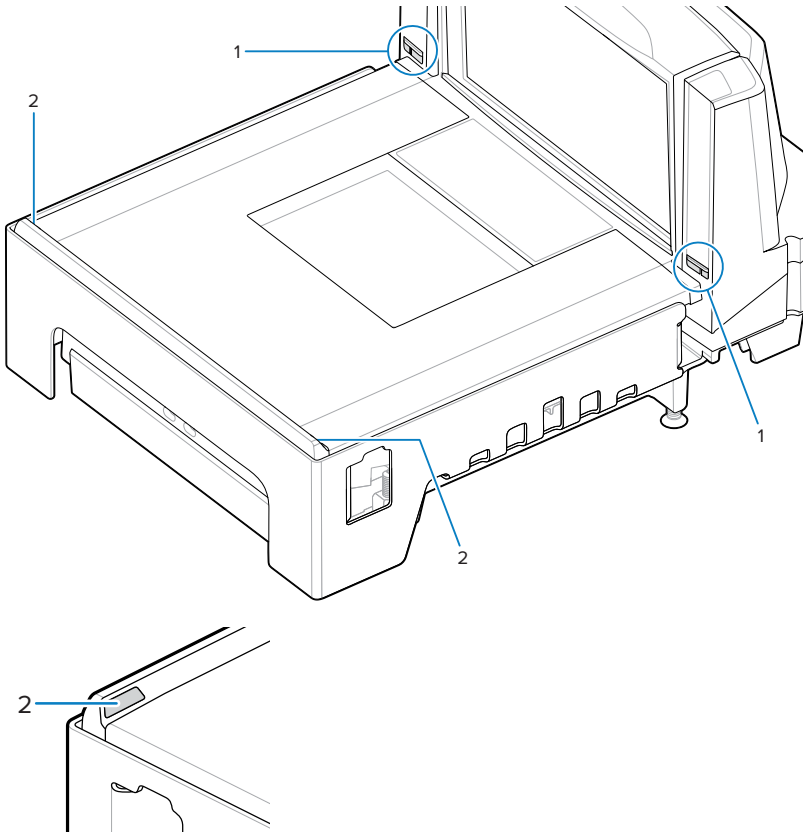

Peripherals

The MP72 Scanner Scale supports various peripheral devices.

Customer Facing Scanner

The Customer Facing Scanner (CFS) is an optional integrated device that supports scanning barcodes, coupons, and loyalty cards from customers' mobile phones and paper.

Figure 8 Customer Facing Scanner

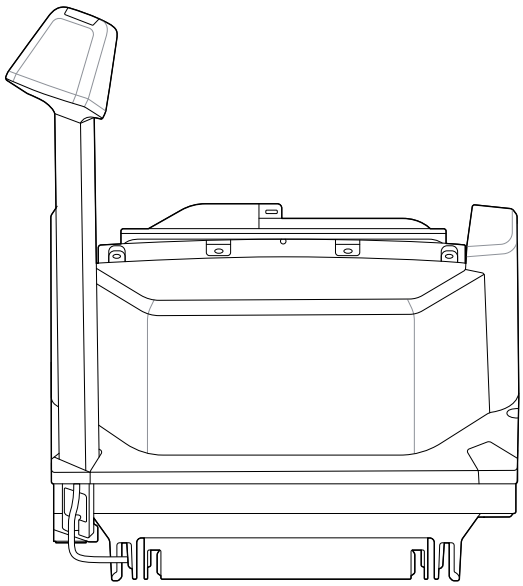

Auxiliary Hand-held Scanner

The MP72 provides auxiliary data ports (USB and RS-232) for hand-held scanner connection.

NOTE: The MP72 supports connecting an auxiliary cordless scanner, such as the DS8178. If the scanner uses a standard cradle, a separate cradle power supply is required.

IMPORTANT: The MP72 scanner does not configure an auxiliary scanner. Auxiliary scanners must be configured separately.

EAS Devices

The MP72 supports various Sensormatic and Checkpoint EAS devices.

- Sensormatic AMB-9010 controller
- Sensormatic AMB-9010-IPS controller
- Checkpoint controller
- Checkpoint with interlock controller

See Electronic Article Surveillance (EAS) for detailed information.

Scale Devices

The MP72 supports various scales and displays.

- OEM standard scale
- Single/dual head Scale Displays
- Mettler-Toledo price computing scale for parts of Europe
- Bizerba scale

USB Flash Drives

The MP72 accommodates a typical USB flash drive with a Type A connector.

See USB Staging Flash Drive.

Related Product Line Configurations

Check Solutions Pathway for additional information regarding all available accessories, and the latest available configurations.

Host Interfaces and Cable Pinouts

This section describes the host interfaces supported by the MP72 Scanner Scale and how to connect the scanner to a host, and includes host interface barcodes.

See Connector Ports for locations of interface connectors. OPOS/JAVAPOS settings are outside the scope of this guide. For the Zebra SDK, go to zebra.com/scannersdkforwindows.

NOTE: See Communication Protocol Functionality for SDK-supported functionality by communication protocol.

Interfaces, Components, and Communication

The MP72 supports the following connections and tools.

POS Interfaces and Host Communication

IMPORTANT: Avoid inserting a POS cable in the AUX 1 or AUX 2 port.

- USB 2.0 full speed using Zebra USB multi-host cables
- RS-232 connection using several communication protocols
- RS-485 communication protocol
- USB type C connection for the color camera

NOTE: See Communication Protocol Functionality for SDK-supported functionality by communication protocol.

Auxiliary Ports and Peripherals

The MP72 includes three USB 2.0 full-speed auxiliary ports and two RS-232 auxiliary ports. See Connector Ports and Connector Pins for port locations and details.

The MP72 supports the following peripherals:

IMPORTANT: Use only Zebra approved cables when connecting peripherals to MP72 ports.

- Hand-held scanners in USB mode or RS-232 mode
- Customer Facing Scanner (USB only)

NOTE: The MP72 supports one hand-held scanner plus one CFS.

- Wireless auxiliary scanner via a corded cradle as an auxiliary device

NOTE: The MP72 supports connecting an auxiliary cordless scanner, such as the DS8178. If the scanner uses a standard cradle, a separate cradle power supply is required.

- Sensormatic controller via the RS-232 auxiliary port
- Dual cable scanner/scale via RS-232 AUX 1 or AUX 2 port

Programming Management Tools

- 123Scan
- SMS
- Staging flash drive reprogramming (USB memory stick)

NOTE: Only Zebra hand-held scanners can be managed via 123Scan (see 123Scan and Software Tools) and SMS through the MP72 scanner.

Application Programming Interfaces

- Zebra scanner SDK APIs (CoreScanner APIs)

NOTE: See Communication Protocol Functionality for SDK-supported functionality by communication protocol.

- Zebra scanner OPOS/JPOS APIs

For access to these programming interfaces, go to zebra.com/scannersdkforwindows.

NOTE: If the MP72 is powered up with no interface cable present, it reverts to **No Host mode**. This is useful for demonstrations where no host is present.

USB Connections Interface

The MP72 connects directly to a USB host.

An additional power supply may be required (PWR-BGA12V50W0WW with CBL-DC-376A1-01 - DC cable). Only a USB Power Plus host using a Zebra Power Plus cable can power the MP72 without an external power supply.

NOTE: See Communication Protocol Functionality for SDK-supported functionality by communication protocol.

Figure 9 USB Connections

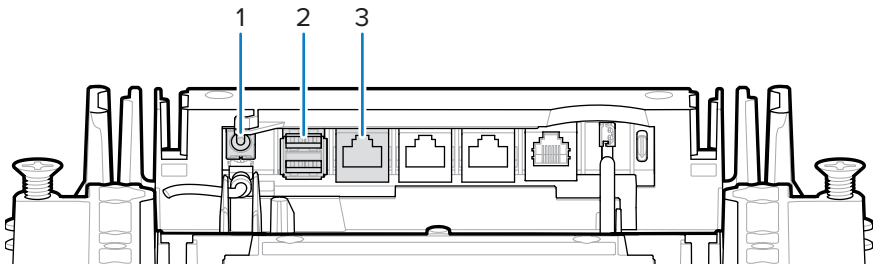

Item	Description
1	12 VDC power
2	AUX scanner connection (AUX A-B)
3	POS interface

NOTE: Interface cables vary depending on configuration.

USB Connection Methods

The MP72 offers three USB connection methods.

- POS connection using USB Power Plus (12V). Requires a CBA-U52-S16PAR cable between POS equipment (for example, IBM) and the MP72 POS RJ-45 connector. The MP72 is a USB device for this connection; no power supply is required (the MP72 draws power from the USB cable).
- POS connection using USB Standard A (5V). Requires a CBA-U51-S16ZAR cable between POS equipment (standard device - PC) and MP72 POS RJ-45 connector. The MP72 is a USB device but requires an external power supply (MP72 does NOT draw power from the USB cable).
- AUX scanner connection using a Zebra USB hand-held scanner. Requires a Zebra USB type A cable between the Zebra USB hand-held scanner (RJ-45) and the MP72 AUX A-B USB port. The MP72 is the USB host, and the Zebra scanner is the USB device that draws power from a 5V cable.

Setting up the MP72

Connect and configure the MP72 via USB.

1. Connect the RJ-45 modular connector of the USB interface cable to the POS interface port on the MP72.
2. Plug the series A connector or the Power Plus connector into the USB host. If Power Plus is used, the MP72 powers up with the POS.
3. If no Power Plus is used, connect a 12V power supply. This immediately turns the MP72 on.
4. Select the USB device type by scanning the appropriate barcode (see USB Device Type).
5. Use one of the following methods to modify any parameter options:
   - 123Scan
   - 123Scan 2D configuration barcode
   - USB staging flash drive (see USB Staging Flash Drive)
   - Scan the appropriate barcodes in the MP72 Scanner Scale Barcode Programming Guide

USB Device Type

To select a USB device type, scan one of the barcodes in this section.

NOTE:

- When changing USB device types, the MP72 automatically resets and issues the standard startup beep sequences.
- Before scanning CDC COM Port Emulation, install the appropriate USB CDC driver on the host to ensure the scanner does not stall during power up (due to a failure to enumerate USB). Go to zebra.com/support, **Support & Downloads** > **Barcode Scanners** > **USB CDC Driver**, select the appropriate Windows platform, and download either **Zebra_CDC_ACM_Driver_(x64)v2.15.0004.exe** (64 bit) or **Zebra_CDC_ACM_Driver(x86)_v2.15.0004.exe** (32 bit).
- For all MP72 programming barcodes, refer to the MP72 Scanner Scale Barcode Programming Guide.

To recover a stalled scanner, install the USB CDC driver; or unplug the USB cable (at the MP72 side), apply power, and scan **IBM Table-top USB** or any other non-USB CDC host.

IBM Table-top USB

IBM Hand-held USB

IBM OPOS (IBM Hand-held USB with Full Scan Disable)

USB HID Keyboard

NOTE: When the HID Keyboard host is selected while the MP72 has auxiliary scanners connected, use ADF rules to program the auxiliary scanners to add a 500 ms pause to the end of the data to prevent barcode data interleaving from multiple scanners. This functions with standard RS-232 and SSI over RS-232 (with the Send Raw Decode Data setting).

USB CDC Host

Symbol Native API (SNAPI) with Imaging Interface

Symbol Native API (SNAPI) without Imaging Interface

RS-232 Connections Interface

Use the RS-232 interface to connect the MP72 to POS devices, host computers, or other devices with an available RS-232 port (for example, a COM port).

NOTE: See Communication Protocol Functionality for SDK-supported functionality by communication protocol.

MP72 Scanner Only or MP72 Scale with Single Cable Protocol

The RS-232 interface supports various host and auxiliary connections.

NOTE: The MP72 uses +/-6V RS-232 signal levels to accommodate long cable lengths and increased noise immunity.

Figure 10 RS-232 Connections

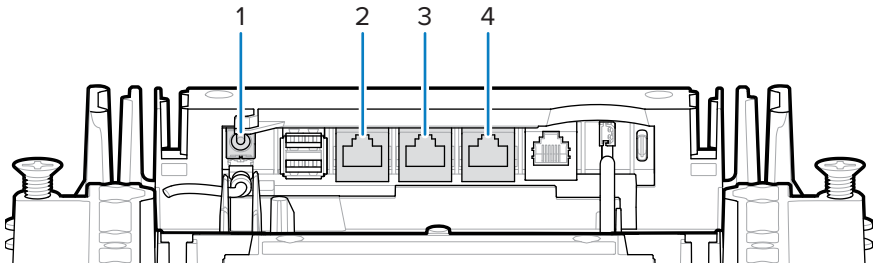

Item	Description
1	12 VDC power
2	POS
3	RS-232 Aux 1
4	RS-232 Aux 2

NOTE: Interface cables vary depending on configuration.

Table 3 Host Connections

Port	Connection Options			
POS	Standard USB (p/n CBA-U51-S16ZAR)	USB PlusPower (p/n CBA-U52-S16PAR)	RS-232 (p/n CBA-R51-S16ZAR)	RS-485 (p/n CBA-M51-S16PAR)

Table 4 Auxiliary Connections

Configuration Choices for the Devices Below	RS-232 Device Port Configuration Value[4]	Connect Device to These Ports			
		RS-232 AUX 1	RS-232 AUX 2	USB1 (AUX A)	USB2 (AUX B)
RS-232 auxiliary scanner, and a Sensormatic Controller [3]	0 [1]	Sensormatic Controller	RS-232 auxiliary scanner [3]	USB auxiliary scanner [3]	USB auxiliary scanner [3]
RS-232 auxiliary scanner, and a Dual Cable Scanner/Scale	1	Dual Cable Scanner/ Scale [2]	RS-232 auxiliary scanner [3]	USB auxiliary scanner [3]	USB auxiliary scanner [3]
Dual Cable Scanner/ Scale, and a Sensormatic Controller [3]	2	Sensormatic Controller	Dual Cable Scanner/Scale [2]	USB auxiliary scanner [3]	USB auxiliary scanner [3]
Third-Party-Scale & Sensormatic-Controller	4	Third-Party-Scale	Sensormatic Controller	USB auxiliary scanner [3]	USB auxiliary scanner [3]

NOTE: [1] Default setting

[2] The Dual Cable Scanner/Scale supports the industry standard SASI, DIGI, ICL OMRON, ICL Old OMRON, ICL Portugal, and scale-only protocols. The default protocol on this Dual Cable Scanner/ Scale port is SASI.

[3] In all configurations up to one or two additional USB auxiliary scanners can be connected, but the total RS-232 auxiliary scanners plus USB auxiliary scanners cannot exceed two. An auxiliary scanner is not counted until it is attached.

[4]See Configuring the RS-232 Device Port.

Price Computational Scale Interface Circuit Drawing

The Price Computational Scale Interface is available on AUX 1. See Third-Party Scale to enable or disable Third-Party Scale functionality.

Figure 11 Price Computational Scale Interface

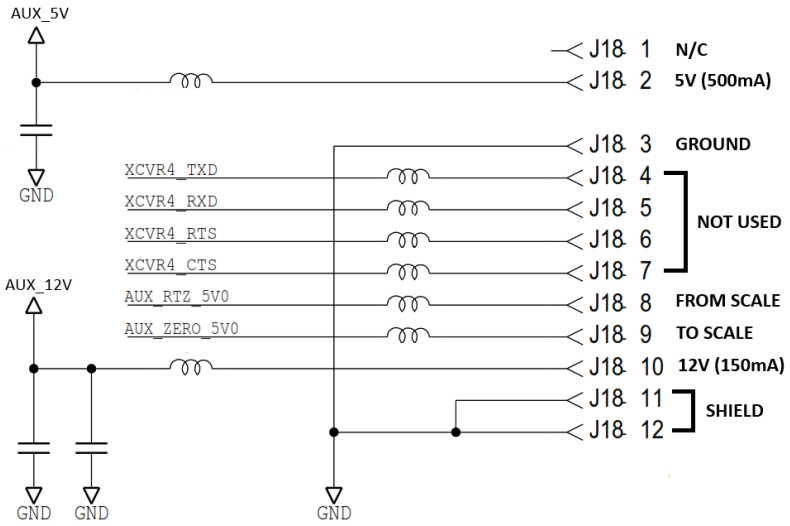

NOTE: Third Party Scale configurations only function on Zebra Bioptic systems sold without a scale (model numbers starting with MP7200-). Zebra Bioptic systems sold with a scale (model numbers starting with MP7201-, MP7202-, MP7203-, MP7204-) do not support Third Party Scale configurations.

Connecting to an RS-232 Host

Connect the MP72 to an RS-232 host.

1. Connect the modular connector of the RS-232 interface cable to the POS interface port on the MP72.
2. Connect the other end of the RS-232 interface cable to the serial port on the host.
3. Connect a 12V power supply directly to the MP72.
4. Select the RS-232 host type by scanning the appropriate barcode (see RS-232 Host Types). If your host does not appear in the terminal specific tables, refer to the host documentation to set communication parameters to match the host.
5. To modify any other parameter options, scan the appropriate barcodes in the MP72 Scanner Scale Barcode Programming Guide.

Models with a Dual Cable Scanner/Scale

Use the RS-232 interface to connect the MP72 to POS devices, host computers, or other devices with an available RS-232 port (for example, a com port). Then, use a second RS-232 cable (p/n CBA-R51-S16ZAR) to connect the MP72 Dual Cable Scanner/Scale AUX port to a scale-only port on the POS device.

The Dual Cable Scanner/Scale interface supports the industry-standard SASI scale-only protocol and communicates with a POS using a 9600 baud rate, 7 data bits, and even parity.

To set up the MP72 and Dual Cable Scanner/Scale:

1. Attach the RJ-45 modular connector of the RS-232 scanner interface cable to the POS port on the MP72.
2. Connect the other end of the interface cable to the serial scanner port on the host.
3. Attach the RJ-45 end of the RS-232 interface cable to AUX 2 on the MP72 (see Connector Ports).
4. Connect the other end of the cable to the scale-only port on the host.
5. Connect the power supply directly to the MP72.
6. Select the RS-232 scanner host type by scanning the appropriate barcode (see RS-232 Host Types). If your host does not display in the terminal-specific tables, refer to the host documentation to set communication parameters to match the host. To modify other parameter options, scan the appropriate barcodes in the MP72 Scanner Scale Barcode Programming Guide.

NOTE: The protocol on this Dual Cable Scanner/Scale port is SASI.

7. Set the RS-232 device port configuration by scanning the appropriate barcode in the MP72 Scanner Scale Barcode Programming Guide.
8. Cycle power on the MP72.

RS-232 Host Parameters

Various RS-232 hosts use their own parameter default settings. Selecting standard, ICL, Fujitsu, Wincor-Nixdorf Mode A, Wincor-Nixdorf Mode B, OPOS/JPOS, Olivetti, Omron, Common Use Terminal Equipment (CUTE-LP/LG barcode readers), NCR, or Datalogic sets the defaults listed in the following tables.

NOTE: This guide includes limited parameter barcodes. Refer to the MP72 Scanner Scale Barcode Programming Guide for all programming barcodes.

NOTE: All items listed in RS-232 Terminal Specific Parameters table and RS-232 Terminal Specific Parameters 2 table are for scanner-only connections except for NCR, which supports scanner and scale.

RS-232 Terminal Specific Parameters

Table 5 RS-232 Terminal Specific Parameters

Parameter	ICL	Fujitsu	Wincor-Nixdorf Mode A	Wincor-Nixdorf Mode B/ OPOS/JPOS
Baud Rate	9600	9600	9600	9600
Parity	Even	None	Odd	Odd
Stop Bit Select	One	One	One	One
ASCII Format	8-Bit	8-Bit	8-Bit	8-Bit
Hardware Handshaking	RTS/CTS Option 3	None	RTS/CTS Option 3	RTS/CTS Option 3
Software Handshaking	None	None	None	None

Table 5 RS-232 Terminal Specific Parameters (Continued)

Parameter	ICL	Fujitsu	Wincor-Nixdorf Mode A	Wincor-Nixdorf Mode B/ OPOS/JPOS
Serial Response Timeout	9.9 Sec.	2 Sec.	None	None
RTS Line State	High	Low	Low	Low = No data to send
Beep On <BEL>	Disable	Disable	Disable	Disable
Transmit Code ID	Yes	Yes	Yes	Yes
Data Transmission Format	Data/Suffix	Data/Suffix	Data/Suffix	Data/Suffix
Prefix	None	None	None	None
Suffix	CR (1013)	CR (1013)	CR (1013)	CR (1013)

NOTE: In Nixdorf Mode B, when CTS is low, scanning is disabled, and when CTS is high, scanning is enabled.

If you scan Nixdorf Mode B without connecting the scanner to the proper host, scanning may appear disabled. In this case, scan a different RS-232 host type within 5 seconds of cycling power to the scanner.

Table 6 RS-232 Terminal Specific Parameters 2

Parameter	Olivetti	Omron	CUTE	NCR (Single Cable Scale)	Datalogic
Baud Rate	9600	9600	9600	9600	9600
Parity	Even	None	Even	Odd	Odd
Stop Bit Select	One	One	One	One	One
ASCII Format	7-Bit	8-Bit	7-Bit	7-Bit	7-Bit
Hardware Handshaking	None	None	None	None	None
Software Handshaking	ACK/NAK	None	None	None	None
Serial Response Timeout	9.9 Sec.	9.9 Sec.	9.9 Sec.	9.9 Sec.	9.9 Sec.
RTS Line State	Low	High	High	High	High
Beep On <BEL>	Disable	Disable	Disable	Disable	Enable
Transmit Code ID	Yes	Yes	Yes	Yes	Yes
Data Transmission Format	Prefix/Data/ Suffix	Data/Suffix	Prefix/Data/ Suffix	Prefix/Data/ Suffix *	Data/Suffix
Prefix	STX (1002)	None	STX (1002)	STX *	None
Suffix	ETX (1003)	CR (1013)	CR (1013) ETX (1003)	ETX *	CR (1013)

NOTE: The CUTE host disables all parameter scanning, including Set Defaults. If you inadvertently select CUTE, scan Enable Parameter Barcode Scanning (located in the MP72 Scanner Scale Barcode Programming Guide) then change the host selection.

RS-232 Host Specific Code ID Characters

Selecting ICL, Fujitsu, Wincor-Nixdorf Mode A, Wincor-Nixdorf Mode B, OPOS/JPOS, Olivetti, Omron, Common Use Terminal Equipment (CUTE-LP/LG barcode readers), NCR, or Datalogic enables the transmission of code ID characters listed in the following tables. These characters are not programmable; do not enable the Transmit Code ID feature for these hosts.

Table 7 Host Specific Code ID Characters

Code Type	ICL	Fujitsu	Wincor-Nixdorf Mode A	Wincor-Nixdorf Mode B/ OPOS/JPOS
UPC-A	A	A	A	A
UPC-E	E	E	C	C
EAN-8/JAN-8	FF	FF	B	B
EAN-13/JAN-13	F	F	A	A
Bookland EAN	F	F	A	A
Code 39	C <len>	None	M	M
Code 39 Full ASCII	None	None	M	M
Trioptic	None	None	None	None
Code 32	None	None	None	None
Codabar	N <len>	None	N	N
Code 128	L <len>	None	K	K
GS1-128	L <len>	None	P	P
Code 93	None	None	L	L
I 2 of 5	I <len>	None	I	I
D 2 of 5	H <len>	None	H	H
MSI	None	None	O	O
IATA	H <len>	None	H	H
GS1 Databar Variants	None	None	E	E
PDF417	None	None	Q	Q
MicroPDF417	None	None	S	S
Data Matrix	None	None	R	R
QR Codes	None	None	U	U
Aztec/Aztec Rune	None	None	V	V

Table 8 Host Specific Code ID Characters 2

Code Type	Olivetti	Omron	CUTE	NCR	Datalogic
UPC-A	A	A	A	A	A

Table 8 Host Specific Code ID Characters 2 (Continued)

Code Type	Olivetti	Omron	CUTE	NCR	Datalogic
UPC-E	C	E	None	E	E
EAN-8/JAN-8	B	FF	None	FF	FF
EAN-13/JAN-13	A	F	A	F	F
Bookland EAN	A	F	None	F	None
Code 39	M <len>	C <len>	3	B1	*
Code 39 Full ASCII	None	None	3	None	None
Trioptic	None	None	None	None	$T
Code 32	None	None	None	None	AE
Codabar	N <len>	N <len>	None	N	%
Code 128	K <len>	L <len>	5	B3	#
GS1-128	P <len>	L <len>	5	]C1	None
Code 93	L <len>	None	None	None	&
I 2 of 5	I <len>	I <len>	1	B	i
D 2 of 5	H <len>	H <len>	2	None	None
MSI	O <len>	None	None	None	@
IATA	H <len>	H <len>	2	None	IA
GS1 DataBar Variants	None	None	None	]e0	GS1 DataBar - R4 GS1 DataBar Limited - RL GS1 DataBar Expanded - RX
PDF417	None	None	6	]L2*	P
MicroPDF417	None	None	6	]L2*	mP
Data Matrix	None	None	4	]d0*	Dm
QR Codes	None	None	7	]Q0	QR
Aztec/Aztec Rune	None	None	8	]z0	Az

*In NCR-LEGACY mode the Code-ID transmits a P.

RS-232 Host Types

To select an RS-232 host interface, scan one of the following barcodes.

NOTE: Scanning Standard RS-232 activates the RS-232 driver but does not change port settings (for example, parity, data bits, and handshaking). Selecting another RS-232 host barcode changes these settings.

The CUTE host disables all parameter scanning, including Set Defaults. If you inadvertently select CUTE, scan Enable Parameter Barcode Scanning in the MP72 Scanner Scale Barcode Programming Guide, then change the host selection.

Option:

- *Standard RS-232 (default)
- ICL RS-232
- Wincor-Nixdorf RS-232 Mode A
- Wincor-Nixdorf RS-232 Mode B
- Olivetti ORS4500
- Omron
- OPOS/JPOS
- Fujitsu RS-232
- CUTE
- NCR Variant (both scanner only and scanner/scale versions)
- Datalogic Variant

*Standard RS-232

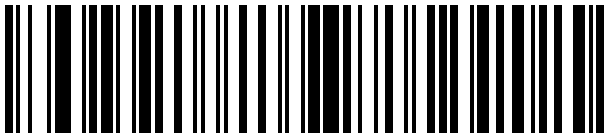

ICL RS-232

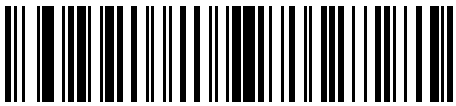

Nixdorf RS-232 Mode A

RS-232 Host Types (continued)

Nixdorf RS-232 Mode B

Olivetti ORS4500

Omron

OPOS/JPOS

RS-232 Host Types (continued)

Fujitsu RS-232

CUTE

NCR

Datalogic Variant

RS-232 Host - NCR Variant

If the NCR host is selected, configure the following NCR-related parameters in the MP72 Scanner Scale Barcode Programming Guide:

- NCR Use Prefix
- NCR Prefix
- NCR Suffix
- NCR Use BCC
- NCR Interface

Configuring the RS-232 Device Port

To configure the device port:

1. Power off the MP72 (disconnect the power cable).
2. Disconnect all RS-232 devices (scanner, Sensormatic, and/or dual cable scale).
3. Power on the MP72 (reconnect the power cable).
4. Scan the appropriate RS-232 Device Port Configuration barcode to select the devices and ports to attach to the MP72.
5. Power off the MP72.
6. Connect the appropriate devices.

NOTE: Ensure the devices connected to the MP72 correctly match the device port configuration option selected. For example, if option 1 is selected, ensure a dual cable scale is connected to the Aux 1 port and an RS-232 scanner is connected to the Aux 2 port. Powering on the MP72 with connected devices that do not match the selected option can result in communication failures.

7. Power on the MP72.

Table 9 Device Specific Default Values (Inherited Defaults)

Device	Baud	Data Bits	Stop Bits	Parity
Scanner	9600	8	1	None
Sensormatic	9600	8	1	None
Dual Cable Scale: SASI Protocol	9600	7	1	Even
Dual Cable Scale: DIGI Protocol	9600	7	2	Even
Dual Cable Scale: ICL Protocol	9600	7	1	Even
Third Party Scale	NA	NA	NA	NA

Available configurations/options are:

- *0 = Aux 1 Sensormatic, and Aux 2 Scanner
- 1 = Aux 1 Dual Cable Scale and Aux 2 Scanner
- 2 = Aux 1 Sensormatic, and Aux 2 Dual Cable Scale
- 4 = Aux 1 Third Party Scale, Aux 2 Sensormatic
- 5 = Aux 1 Sensormatic, and Aux 2 Disabled
- 6 = Aux 1 Dual Cable Scale, and Aux 2 Disabled
- 7 = Aux 1 Third Party Scale, and Aux 2 Disabled
- 8 = Aux 1 Disabled, and Aux 2 Scanner
- 9 = Aux 1 Disabled, and Aux 2 Dual Cable Scale
- 10= Aux 1 Disabled, and Aux 2 Sensormatic
- 11= Aux 1 Disabled, and Aux 2 Disabled

NOTE: Third Party Scale configurations only function on Zebra Bioptic systems sold without a scale (model numbers starting with MP7200-). Zebra Bioptic systems sold with a scale (model numbers starting with MP7201-, MP7202-, MP7203-, MP7204-) do not support Third Party Scale configurations.

RS-232 Device Port Configuration Barcodes

*Aux 1 Sensormatic and Aux 2 Scanner (00h)

Aux 1 Dual Cable Scale and Aux 2 Scanner (01h)

Aux 1 Sensormatic and Aux 2 Dual Cable Scale (02h)

Aux 1 Third Party Scale, Aux 2 Sensormatic (04h)

RS-232 Device Port Configuration Barcodes (continued)

Aux 1 Sensormatic, and Aux 2 Disabled (05h)

Aux 1 Dual Cable Scale, and Aux 2 Disabled (06h)

Aux 1 Third Party Scale, and Aux 2 Disabled (07h)

Aux 1 Disabled, and Aux 2 Scanner (08h)

RS-232 Device Port Configuration Barcodes (continued)

Aux 1 Disabled, and Aux 2 Dual Cable Scale (09h)

Aux 1 Disabled, and Aux 2 Sensormatic (010h)

Aux 1 Disabled, and Aux 2 Disabled (011h)

Third-Party Scale Parameters

These parameters enable and configure third-party scales.

Third-Party Scale

Parameter # 1294

This parameter enables or disables Third-Party Scale functionality.

When disabled, Third-Party Scale LED Pin and Third-Party Scale Zero Pin are ignored/overridden.

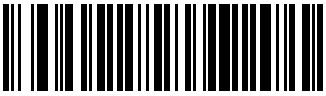

Enable Third Party Scale (1)

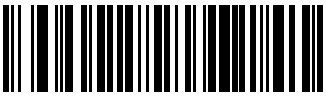

*Disable Third Party Scale (0)

Third-Party Scale LED Pin

Parameter # 1295

This parameter defines the polarity of the LED/Tare input pin that illuminates the scale LED. This parameter has no effect if Third-Party Scale (parameter # 1294) is disabled.

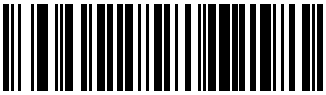

Active Low (0)

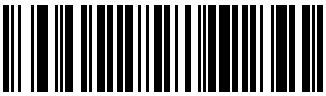

*Active High (1)

Third-Party Scale Zero Pin

Parameter # 1296

This parameter defines the polarity of the zero output pin when the Scale Zero button is pressed. This parameter has no effect if Third-Party Scale (parameter # 1294) is disabled.

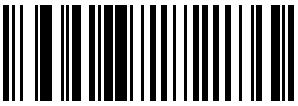

Active Low (0)

*Active High (1)

IBM RS-485 Interface

Connect the MP72 directly to the host interface.

NOTE: See Communication Protocol Functionality for SDK-supported functionality by communication protocol.

Figure 12 IBM RS-485 Connections

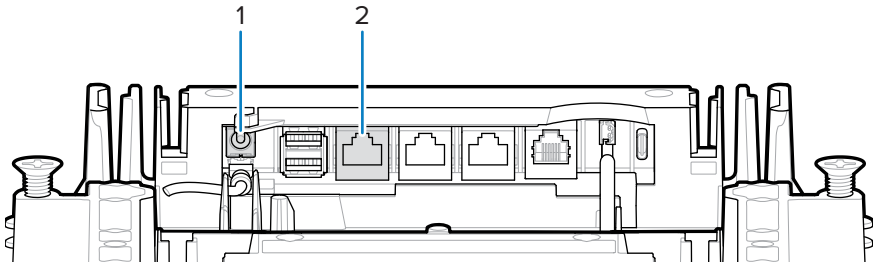

Item	Description
1	12 VDC power
2	POS interface

Setting up the MP72 with IBM RS-485

Connect and configure the MP72 with an IBM RS-485 host.

1. Attach the modular connector of the IBM RS-485 interface cable to the POS interface port on the MP72.
2. Connect the other end of the IBM RS-485 interface cable to the appropriate port on the host (typically Port 9).

NOTE: Older POS systems and/or some retailers require use of the external power supply PWR-BGA12V50W0WW.

3. After the unit powers up, select the port address by scanning the appropriate barcode in the MP72 Scanner Scale Barcode Programming Guide.
4. For MP72 configurations with a scale, scan the appropriate scale port address (IBM Scale Port Addresses).
5. To modify other parameter options, scan the appropriate barcodes in the MP72 Scanner Scale Barcode Programming Guide.

NOTE: The only required configurations are the port addresses (IBM RS-485 port address and a scale port address for scale configurations) and type directives. The IBM system typically controls other MP72 parameters.

To prevent the IBM POS from configuring the MP72, refer to the MP72 Scanner Scale Barcode Programming Guide for information on RS-485 and IBM USB configuration, beep, scale, and type directives.

IBM RS-485 Host Parameters

Use the barcodes in this section to select the IBM RS-485 port used.

NOTE:

- Scanning one of these barcodes enables the RS-485 interface on the MP72.
- The port numbers are no longer physical ports on the IBM POS.
- This section includes port address parameters only. For all MP72 programming barcodes, refer to the MP72 Scanner Scale Barcode Programming Guide.

IBM Port Addresses

This parameter selects the IBM RS-485 port.

*None

Hand-held Scanner Emulation (Port 9B)

Non-IBM Scanner Emulation (Port 5B)

Table-top Scanner Emulation (Port 17)

IBM Scale Port Addresses

The scale port address must be configured for the scale to operate on the IBM RS-485 bus. The default is None Selected.

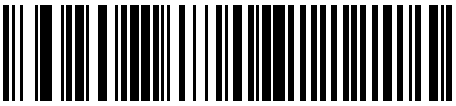

*None Selected

Port 6A

Port 6B

Port 6E

Connector Pins

Refer to the tables in this section for MP72 port pin information.

12V DC (J1)

Table 10 12V DC Jack, 2.5 mm

Pin #	Signal/Name	Direction	Description
1	EXT 12V	In	Center pin: 12V DC (primary power)
2	GND	N/A	Barrel: signal ground

AUX A-B (Stacked USB) (J3)

NOTE: An additional USB port is available in the front under the platter. All USB ports can be used for the USB staging flash drive. See Connectors table and USB Staging Flash Drive for additional information.

Table 11 Stacked USB Port

Pin #	Signal/Name	Direction	Description
1	5V	Out	USB 5V output *
2	D-	Bidirectional	USB D-
3	D+	Bidirectional	USB D+
4	GND	N/A	Signal ground

NOTE: *The total combined current for the USB and RS-232 peripheral ports should be less than 750 mA total auxiliary current. Each individual port should not exceed 500 mA.

POS (J2)

Table 12 RJ-45, Primary POS

Pin #	Signal/Name	Direction	Description
1	DETECT	Out	USB cable detect output
2	5V	In	USB cable 5V detect input
3	GND	N/A	Signal ground
4	TXD/IBM-A	Bidirectional	Multiplexed serial TXD/IBM-A
5	RXD/D+	Bidirectional	Multiplexed serial RXD/USB D+
6	RTS/IBM-B	Bidirectional	Multiplexed serial RTS/IBM-B
7	CTS/USB D-	Bidirectional	Multiplexed serial CTS/USB D
8	DOWNLOAD	In	POS download
9	N/C	N/A	No connection
10	12V	In	Terminal 12V DC to MP72 (power from terminal)*

NOTE: *Terminal systems vary in power capabilities. Ensure your system power supply can support MP72 configuration power requirements. If not, a 12V DC barrel jack is available for external power.

RS-232 AUX 1 (J18)

Table 13 RJ-45 Aux 1

Pin #	Signal/Name	DIrection	Description
1	N/C	N/A	No connection
2	5V	Out	RS-232 scanner 5V DC Supply*
3	GND	N/A	Signal ground
4	TXD	Out	Serial TXD (±5.4V)
5	RXD	In	Serial RXD (±5.4V)
6	RTS	Out	Serial RTS (±5.4V)
7	CTS	In	Serial CTS (±5.4V)
8	Scale LED	In	Price computational scale has returned to zero - reflected in UI Scale Status LED (if enabled). I/O signals are 5V TTL.
9	Scale Zero	Out	Zeros price computational scale when the Zero UI button is pressed (if enabled). I/O signals are 5V TTL.
10	12V/150 mA	Out	Power output for price computational scale.

RS-232 AUX 2 (J5)

Table 14 RJ-45 Aux 2

Pin #	Signal/Name	Direction	Description
1	N/C	N/A	No connection
2	5V	Out	RS-232 scanner 5V supply *
3	GND	N/A	Signal ground
4	TXD	Out	Serial TXD (±5.4V)
5	RXD	In	Serial RXD (±5.4V)
6	RTS	Out	Serial RTS (±5.4V)
7	CTS	In	Serial CTS (±5.4V)
8	N/C	N/A	No connection
9	N/C	N/A	No connection
10	N/C	N/A	No connection

NOTE: *The total combined current for the USB and RS-232 peripheral ports should be less than 750 mA total auxiliary current. Each individual port should not exceed 500 mA.

Scale Display Port (J6)

Table 15 RJ-11, Scale Display

Pin #	Signal/Name	Direction	Description
1	N/C	N/A	No connection
2	5V	Out	Auxiliary 5V output *
3	TXD	Out	Scale Display serial TX (3.3V TTL)
4	RXD	In	Scale Display serial RX (3.3V TTL)
5	GND	N/A	Signal ground
6	N/C	N/A	No connection

NOTE: *The total combined current for the USB and RS-232 peripheral ports should be less than 750 mA total auxiliary current. Each individual port should not exceed 500 mA.

Checkpoint Interlock (J4)

Table 16 EAS Interlock Connector

Pin #	Signal/Name	Direction	Description
1	Interlock	Out	Checkpoint EAS Interlock (5V 4 mA PNP collector out)
2	GND	N/A	Signal ground

USB Type C (J17)

Table 17 USB Type C for Color Camera Configurations

Pin #	Signal/Name	Direction	Description
A1	GND	N/A	Ground
A2	TX1+	In	SuperSpeed differential pair 1 TX, positive
A3	TX1-	In	SuperSpeed differential pair 1 TX, negative
A4	VBUS	N/A	Host indicator (no power consumed by MP72)
A5	CC1	N/A	Configuration channel
A6	D1+	In/Out	USB 2.0 differential pair, position 1, positive
A7	D1-	In/Out	USB 2.0 differential pair, position 1, negative
A8	N/C	N/A	
A9	VBUS	N/A	Host indicator (no power consumed by MP72)
A10	N/C	N/A	
A11	N/C	N/A	
A12	GND	N/A	Ground
B1	GND	N/A	Ground

Table 17 USB Type C for Color Camera Configurations (Continued)

Pin #	Signal/Name	Direction	Description
B2	N/C	N/A	
B3	N/C	N/A	
B4	VBUS	N/A	Host indicator (no power consumed by MP72)
B5	N/C	N/A	
B6	D2+	In/Out	USB 2.0 differential pair, position 2, positive
B7	D2-	In/Out	USB 2.0 differential pair, position 2, negative
B8	N/C	N/A	
B9	VBUS	N/A	Host indicator (no power consumed by MP72)
B10	RX1-	Out	SuperSpeed differential pair 2 RX, negative
B11	RX1+	Out	SuperSpeed differential pair 2 RX, positive
B12	GND	N/A	Ground

NOTE: The USB type-C interface on the MP72 is proprietary and does not support flipped orientation. Use only the following Zebra USB-C color camera cables for the MP72: CBL-CC0025 (2.5M), CBL-CC0020 (2.0M), CBL-CC0015 (1.5M). Do not use MP7000 color camera cables as they are not compatible with the MP72.

Site Preparation and Installation

The MP72 Scanner Scale was designed to drop into an existing bioptic checkstand cutout with no modifications. The MP72 is available in three industry standard sizes.

- Short - no scale available

  Length: 351.0 mm (13.9 in.)

  Width: 292.0 mm (11.5 in.)
- Medium - with or without scale

  Length: 398.0 mm (15.7 in.)

  Width: 292.0 mm (11.5 in.)
- Long - with or without scale

  Length: 506.0 mm (20.0 in.)

  Width: 292.0 mm (11.5 in.)

Site Preparation

Properly prepare the site before installing the MP72 system.

IMPORTANT: This guide provides considerations that may be helpful in ensuring greater safety and productivity, but does not encompass all factors related to worker safety and checkstand design.

Ventilation and Spacing Requirements

The scanner/scale housing is designed to provide adequate space for ventilation and drainage for spills. The following figure shows the drainage holes (1) under the platter for possible spills that may occur when scanning/weighing items.

Figure 13 Drainage/Ventilation Holes

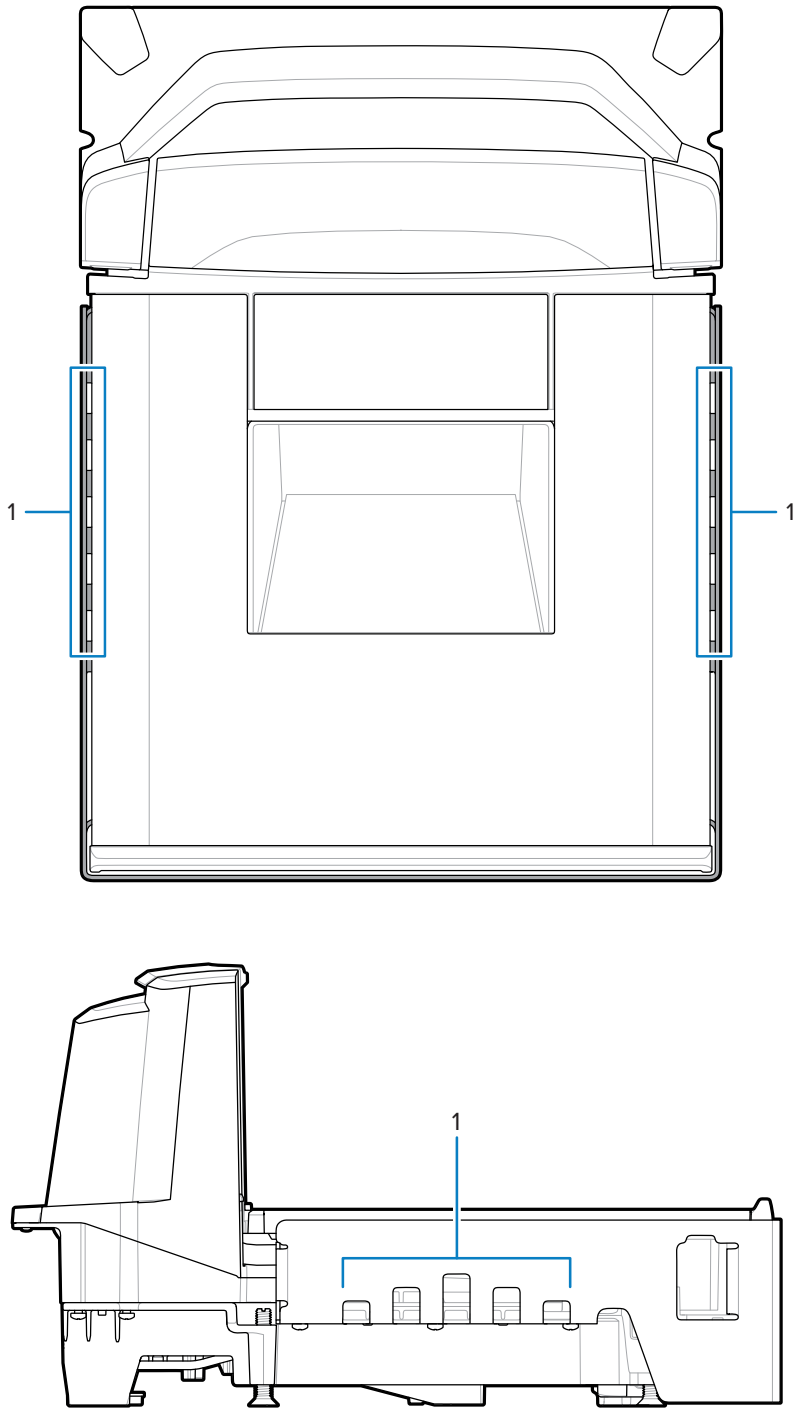

Checkstand ventilation may be required to ensure the MP72 temperature limits are not exceeded. If forced air ventilation is used, it must not pass through the MP72 as this can produce an unstable weighing environment. The ambient air temperature inside the checkstand, adjacent to the MP72, must not exceed 40°C (104°F).

Service Access Requirements

The MP72 is designed to accommodate routine service and maintenance (including scale zeroing and calibration) without removing the scanner from the counter.

Service must be performed by a Zebra Certified Repair Provider who has completed the Service Repair Training course, and (if applicable) the Scale Calibration Training course. For MP72 scanner/scales, depending on the region of installation, a certified Weights & Measures technician is required to place the device in trade before using, and after certain repairs.

Electrical Power Considerations

The MP72 supports two power sources.

- POS equipment
  - IBM register with powered Port 9B interface (using p/n CBA-M51-S16PAR accessory cable)
  - Any register with powered USB interface, 12V only (using p/n CBA-U52-S16PAR accessory cable)
- AC/DC power supply (p/n PWR-BGA12V50W0WW), country-specific IEC Line Cord, and DC power cord (p/n CBL-DC-376A1-01)

Figure 14 Power Supply

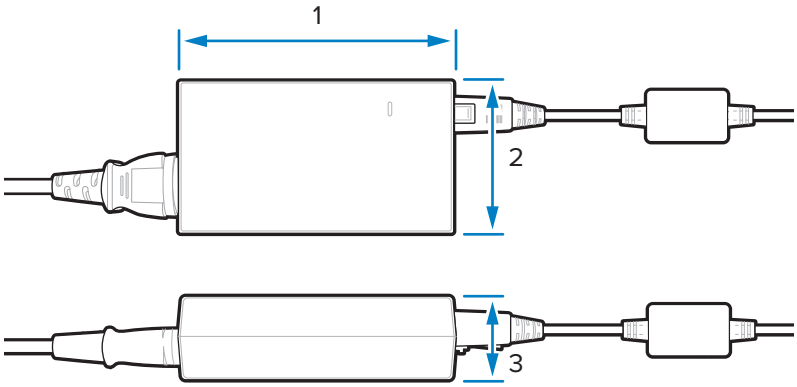

Item	Description
1	110.0 mm (+/- 0.5) / 4.3 in. (+/- 0.02)
2	33.0 mm (+/- 0.5) / 1.3 in. (+/- 0.02)
3	62.0 mm (+/- 0.5) / 2.4 in. (+/- 0.02)

If using the AC/DC accessory power supply, a 115V/230V outlet must be available in the checkstand near the scanner.

Grounding

Properly ground all POS equipment, and use only a three prong IEC-style line cord with the AC/DC accessory power supply.

If you are unsure how to verify proper grounding of equipment in the checkstand, consult a qualified electrician to review the equipment installation.

NOTE: To eliminate a possible safety hazard all metal parts of a checkstand must be electrically grounded.

Checkstand Preparation

If installing the MP72 for the first time in a new checkstand (not replacing a former bioptic device), verify the area allows for proper cabling and an AC/DC power supply. Mounting may require support(s), leveling screws, and peripheral devices.

See Counter Cutout for details about the location and preparation of the opening.

NOTE: If a Sensormatic antenna cable is included in the installation, isolate this from other cabling as much as possible.

Figure 15 Preparing the Checkstand

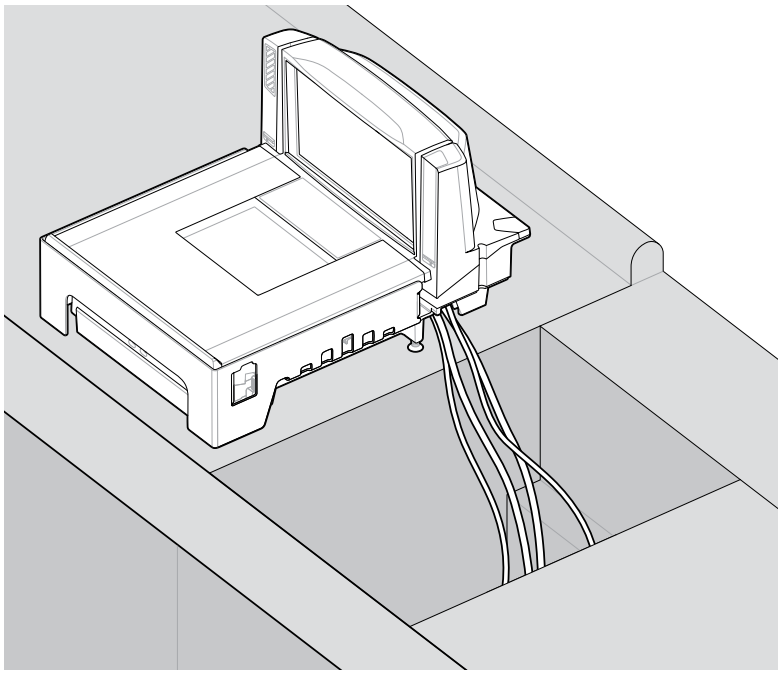

IMPORTANT: Long MP72 configurations (50.6 cm/20.0 in.) are not available with leveling screws. For medium (39.8 cm/15.7 in.) and short (35.1 cm/13.9 in.) configurations, the checkstand should provide for two leveling screws under the front and rear of the MP72.

Leveling screws accessory kit MX301-SR00004ZZWR is shipped with every short and medium configuration. Longer leveling screws with a 25 mm (1 in.) extra length are available for purchase, if required (accessory kit p/n MX302-SR00004ZZWR).

Liquid Spills and Moisture

Select a checkstand design which allows fluids to flow through, and directs liquids and moisture build up away from any electronic equipment or storage areas. Should a liquid spill occur, ensure that moisture can flow through the checkstand without pooling. Locate the power supply away from any area where spills may occur.

Vertical Clearance

For all MP72 configurations, the maximum height above the platter is 129.5 mm (5.1 in); the maximum depth below the platter is 103.6 mm (4.08 in).

Tools

No tools are required to install a MP72 without a scale or a Checkpoint antenna.

The following tools are required to mount the Scale Display:

- Ruler (or similar measuring device)
- Pencil (or similar measuring device)
- Drill
- 2.4 mm (3/32 in.) diameter drill bit (to make screw holes where display is to be mounted)
- 19 mm (3/4 in.) diameter drill bit (to make cable pass through hole where display is to be mounted)
- #2 Phillips screwdriver

If leveling screws are used on a small or medium MP72, a Phillips or flat blade screwdriver is needed.

Counter Cutout

The MP72 is available in long, medium, and short configurations. Ensure the counter opening size reflects the dimensions of the model being installed.

See Checkstand Counter Cutouts and MP72 Dimensions, and Installing the MP72 Scanner Scale for installation information.

Ergonomics

Design the installation for maximum comfort, efficiency, safety, and ease of use, allowing items to be directed within easy reach, and a scanning area requiring no lifting or special orientation of items.

Installation Process

These steps provide an outline of the MP72 installation procedure.

1. Remove the existing scanner scale and accessories if necessary.
2. Unpack the MP72 and accessories.
3. Install the Scale Display if applicable.
4. Install the CFS if applicable.
5. Install the Sensormatic antenna if applicable.
6. Install Checkpoint antennas if applicable.
7. Install the MP72 trim kit if applicable.
8. Install the MP72/scale in the checkstand.
9. Lower and level the MP72 in the checkstand.
10. Install the platter.
11. Connect the cables.
12. Power up the MP72.
13. Calibrate the scale if applicable.
14. Configure the Weight Guard if applicable.

Installing Components

The following items are optionally available for installation with the MP72.

- Scale and Scale Display (depending on Weights and Measure regulatory jurisdictions, a Scale Display may be required for units with a scale)
- Customer Facing Scanner (CFS)
- Checkpoint EAS antenna
- Sensormatic EAS coil antennae and RS-232 cabling
- AUX hand-held scanners

Removing Existing Scanner Scale and Accessories

If you are replacing existing equipment, remove the old scanner scale.

1. Log off the POS and ensure store personnel cleared the drawer. Some installations may require shutting down the POS.
2. Unplug the current scanner from its power supply.
3. Prior to removing cables, note the current cable runs.
4. Remove all cables connected to the scanner. Do not cut cables if you are using or selling the old equipment.
5. If applicable, unplug the current hand-held device from its power supply, and disconnect it from the current scanner/host.
   a) If reusing the hand-held device, leave the cable runs intact.
   b) If the hand-held device was attached to the scanner with an RS-232 cable, a new cable and a new hand-held device configuration is required.
6. If a Sensormatic connection is present, note two cables:
   a) The large cable to the coils/antennas - disconnect from the current scanner but leave in place.
   b) The RS-232 cable to the Sensormatic controller communications port - use its run to assist replacing it.
7. If a Scale Display is present:
   a) Note how the current display was mounted and determine if this placement can accommodate the new Scale Display. Adjustments to the layout and cable run may be required.
   b) Unplug the old Scale Display power.
   c) Remove it from the checkstand.
   d) Remove its cables.
   e) Remove the Scale Display.
8. Remove the existing scanner.

Unpacking MP72 Scanner Scale Equipment

Unpack the MP72 equipment.

1. Unpack all components and ensure all parts are present. The MP72 Scanner Scale Box Contents table lists the material in each box. Each item is contained in a separate package within the box. Power cables, host communications cables, and the trim filler are sold separately in kits.

Table 18 MP72 Scanner Scale Box Contents

Description	Part Number
MP72 w/o Platter	MP720X-XXXXX000XX
Platter	N/A
Leveling Screws	MX301-SR00004ZZWR (leveling screws are included in short and medium configurations)

Table 18 MP72 Scanner Scale Box Contents (Continued)

Description	Part Number
Regulatory Guide	MN-004907-xx

NOTE: An optional Scale Display is available separately for scale models only.

2. For protection during shipment, the MP72 platter is covered with a tight fitting layer of plastic. Remove this before placing the unit into service. For a scale model, remove this just before scale calibration, and for a non-scale model, as the final installation step.

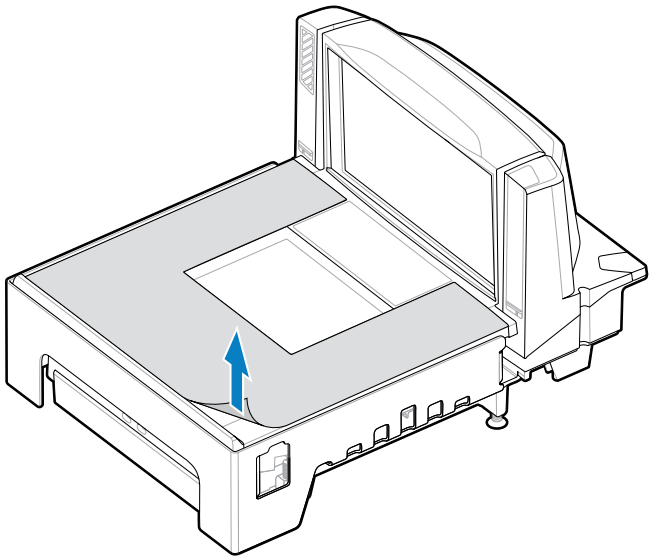

CAUTION: Do not use a sharp object to remove the protector. Doing so can damage the platter.

3. Keep the packing (it is the approved shipping container, and should be used if the MP72 needs to be returned for servicing), or dispose of the packing in an environmentally sensitive manner.

Pre-Installation Notes

These notes provide important information and tips for MP72 installation.

- If a Scale Display is included, it is recommended to mount it in an appropriate location, preferably where the old display was mounted. Route the cable through the checkstand.
- If the unit includes a scale, scale calibration is required.
- If the unit includes EAS Sensormatic, contact a Sensormatic representative for installation:
  - The coils require installation.
  - Thread the large Sensormatic cable from the controller box to the coils.
  - Connect the Sensormatic RS-232 cable to the unit.
- If EAS Checkpoint is required, install the Checkpoint antenna and ensure a Checkpoint representative connects the device to the controller.
- If EAS Checkpoint with interlock is used, connect the interlock cable to the MP72.

- All accessories (such as a hand-held scanner or CFS) require connections.

Scale Display

When installing the optional Scale Display, ensure the displayed weight value is visible from both the cashier's and customer's viewing angle.

Figure 16 Single Scale Display - Dimensions; Display Rotates Independently (Approximately 290°)

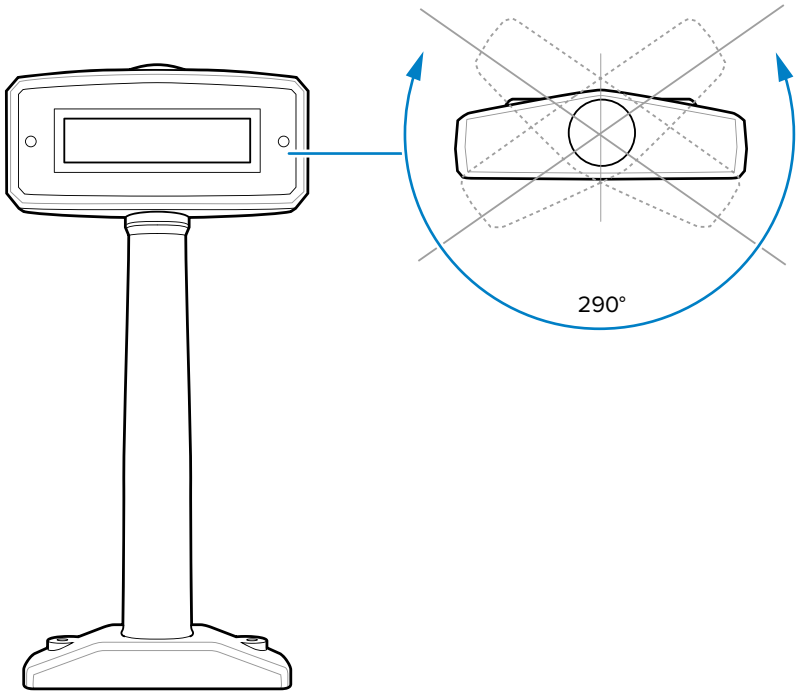

NOTE: The MX201-SI00WW supports the single interval scale (lbs and kg). The MX201-DI00WW supports the dual interval scale (lbs and kg).

Figure 17 Single Head Pole Display - Dimensions; Display Rotates Independently (Approximately 340°)

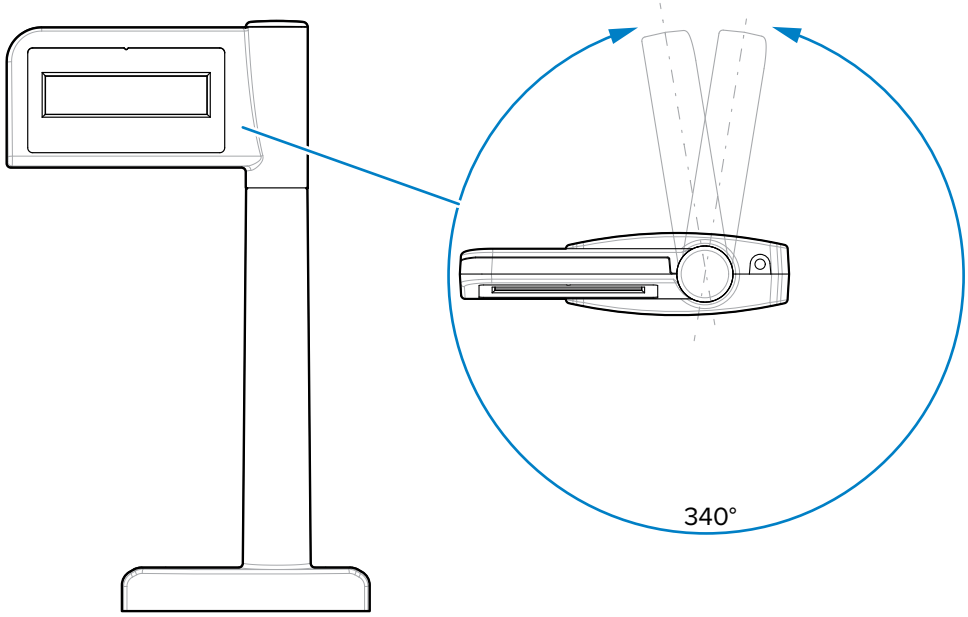

NOTE: The MX203-D200KG, MX203-S200LB, MX203-S200KG, and MX203-S200BR support the single interval scale (lbs and kg).

Figure 18 Dual Scale Display - Dimensions; Display Rotates Independently (Approximately 290°)

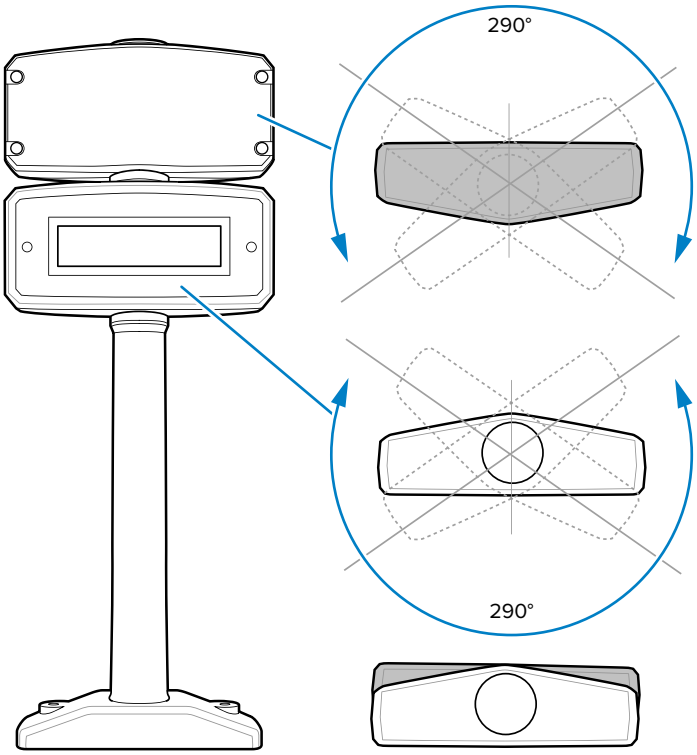

NOTE: The MX202-SI00WW supports the single interval scale (lbs and kg). The MX202-DI00WW supports the dual interval scale (lbs and kg).

Figure 19 Dual Head Pole Display - Dimensions; Display Rotates Independently (Approximately 335°)

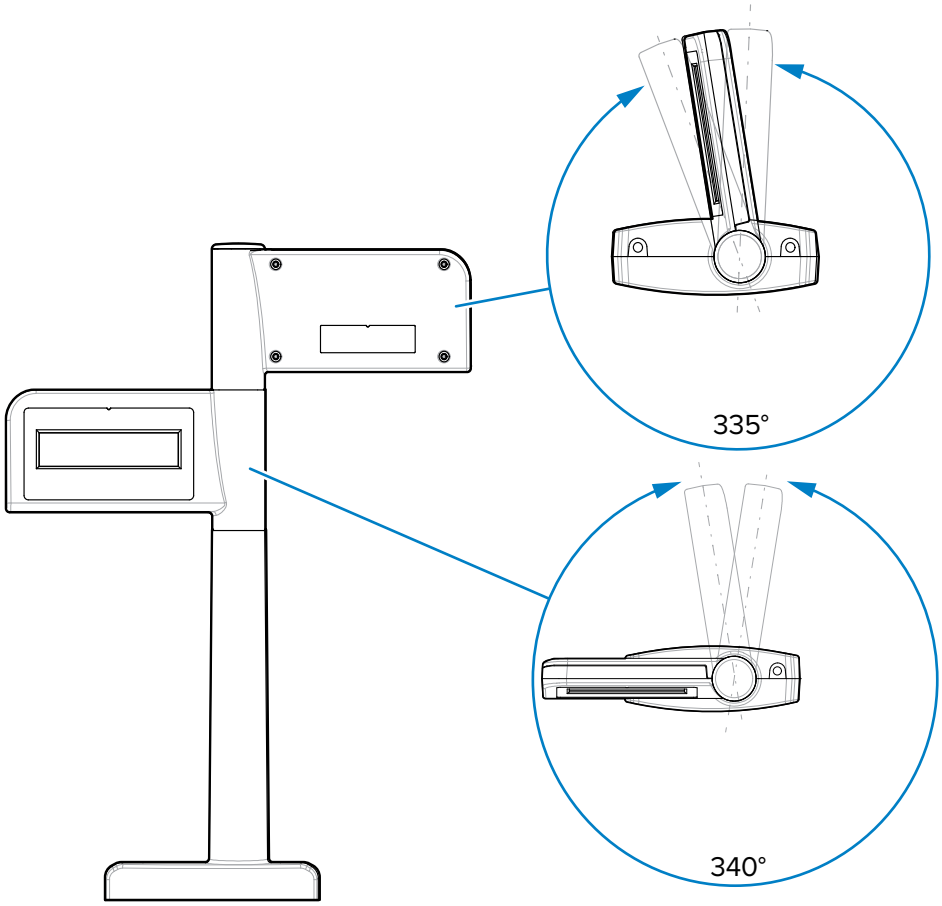

NOTE: The MX204-S200LB, MX204-S200KG, and MX204-D200KG support the dual interval scale (lbs and kg).

Pre-installation Notes

For an existing scale display from a previous scanner, place the Zebra Scale Display in the same location or a new location specified by the retailer and/or local weights and measures law.

Unscrew the existing display, disconnect the cable from the scanner, and remove the display and cables.

For a new Scale Display installation, determine the location based on counter design and viewing angle, where it cannot impede access to scanned items moving over the MP72, payment terminals, printer validation, paper roll slots, or access to replace consumables (rolls).

NOTE: Ensure both the cashier and customer can see the weight value displayed.

Drill the required holes where the display is to be mounted.

- The optional 19 mm (3/4 in.) diameter hole is used for cable pass-through.

NOTE: The cable can also be routed on top of the counter via the notch in the base of the display.

- Use the display to mark holes for the mounting screws, and drill two pilot holes to a diameter of 2.4 mm (3/32 in.) and a depth of 25 mm (.98 in.)

Installing the Scale Display

This section addresses how to install the scale display.

1. Unpack the new Scale Display.
2. Place the proper faceplate on the display.
   a) Fit the correct label on the Scale Display window. Select an overlay to ensure the proper weight units (kg or lb) that are required and parameters EXACTLY match the scale parameters printed on the scale Weights and Measures label. Depending on the unit and the country location, labels vary. You MUST match the label to the type of MP72 scale you are installing. (Labels, and instructions for their use, are packaged with the Scale Display.)
      - kg single interval
      - lb single interval
      - kg dual interval
      - kb single interval (with comma) for Brazil
   b) Remove adhesive backing and carefully secure on the front face of the display.
3. Route the cable through the 19 mm hole in the countertop, or through the notch in the base of the display.

NOTE: The notch is usually located towards the rear, where it is less visible.

4. Fasten the Scale Display to the countertop.
   a) Align the display over the countertop screw holes.
   b) Place a screw through each screw hole in the base of the display.
   c) Drive both screws into the counter until tight.
   d) Route the cable accordingly and connect the Scale Display cable to port 0.0 Scale Display on the MP72 before powering up the scanner/scale (see Connector Ports).
5. Power on the MP72. The Scale Display presents the following test sequence:
   a) Displays 00.000 for 1.5 seconds, and then 99.999 for 1.5 seconds.
   b) Displays xx.xx0 lb or xx.xxx kg (based on the units selected) in normal operating mode.

Installing the Customer Facing Scanner

Mount the CFS on either side of the MP72 and connect it to the USB-A port on the main PCB on the bottom of the MP72.

NOTE: The CFS kit (MX72-SR000WW) includes left and right brackets. Choose the bracket according to the CFS mounting side.

Installing the CFS Bracket

CFS bracket holes align with corresponding openings on the MP72 flange for the long configuration, or on the MP72 lower housing for the short and medium (flangeless) configurations.

Long (Flanged) Configuration

This section describes how to install the CFS bracket on the long MP72 configuration.

1. Remove the two T20 screws from the MP72 flange.

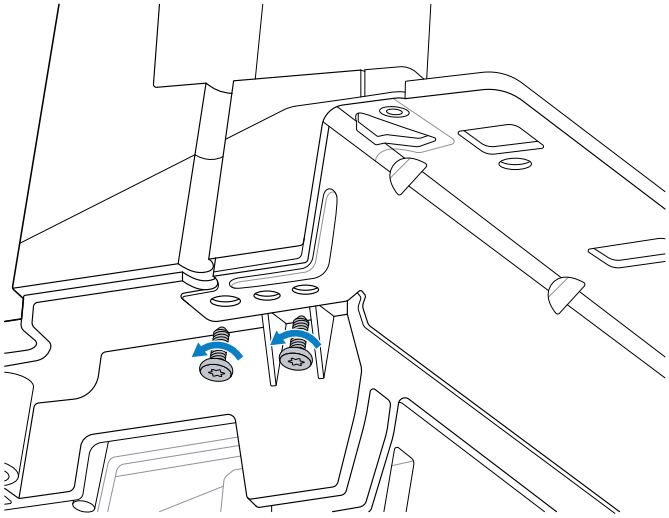

2. Secure the CFS bracket (2) to the flange (1) using the two T20 flange screws. Torque screws to 1.36 Nm +/- 0.03 (12 in-lb +/- 0.25).

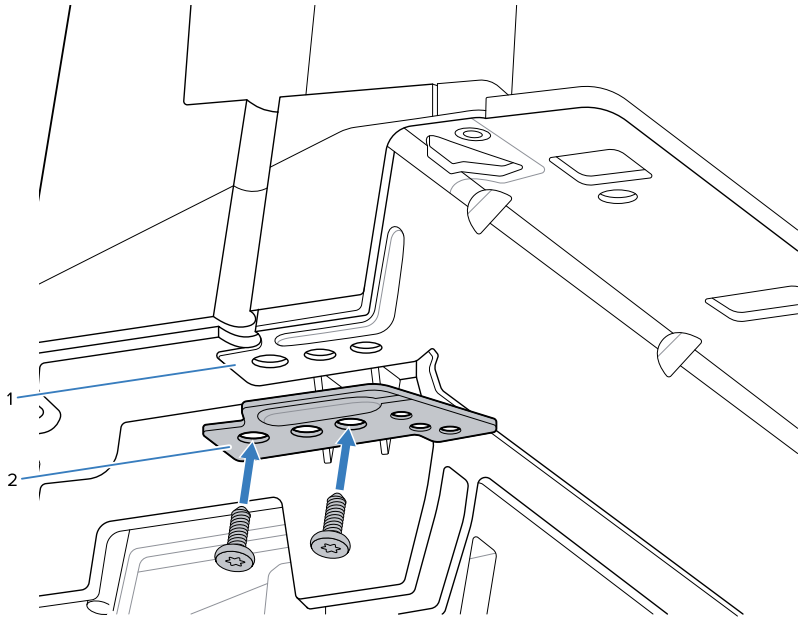

Short or Medium (Flangeless) Configuration

This section describes how to install the CFS bracket on the short or medium (flangeless) MP72 configuration.

Place the spacer (2) between the CFS bracket (3) and MP72 chassis (1), and secure using the two screws provided with the CFS. Torque to 1.36 Nm +/- 0.03 (12 in-lb +/- 0.25).

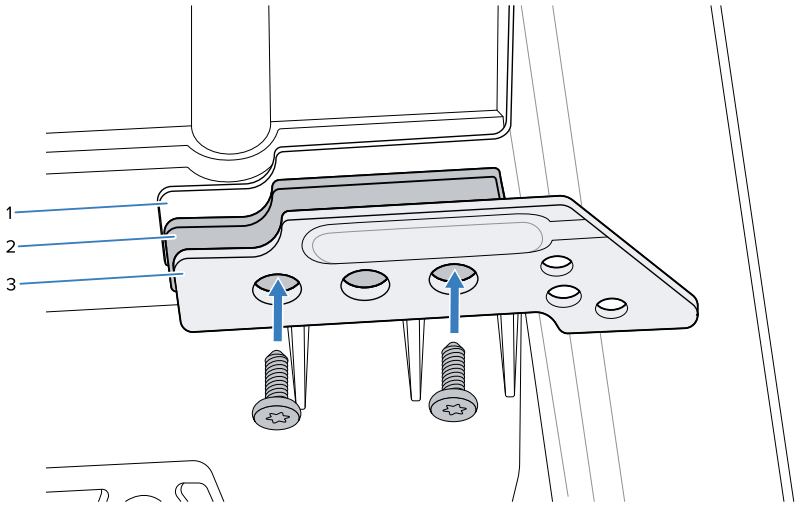

Replacing the Filler Cap

After installing the CFS bracket, replace the MP72 filler cap with the CFS filler cap.

NOTE: The CFS kit includes left and right filler caps. Select the correct one according to the CFS mounting side, as shown in Step 3.

1. Remove the MP72 filler cap T7 mounting screw.

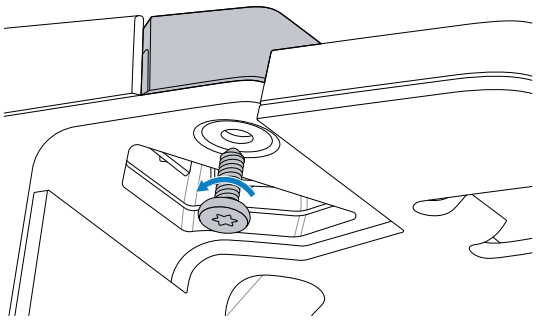

2. Remove the MP72 filler cap.

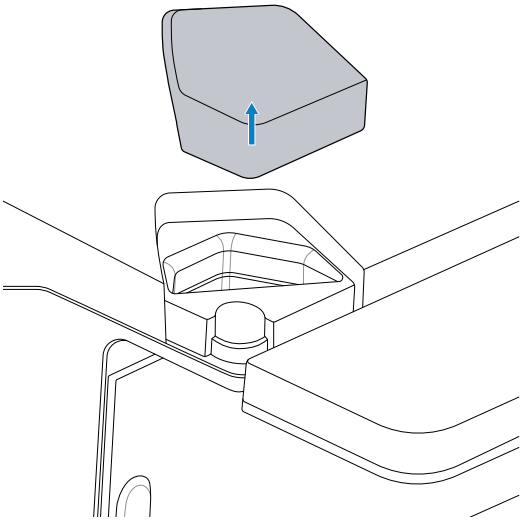

3. Insert the CFS filler cap and hold in place.

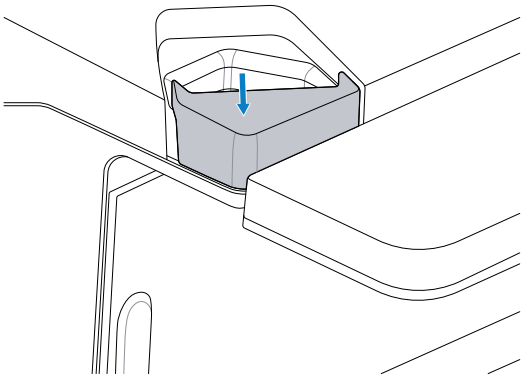

4. Install the filler cap T7 screw and tighten using 0.23 Nm +/- 0.03 (2 in-lb +/- 0.25) torque until the filler cap is fully seated.

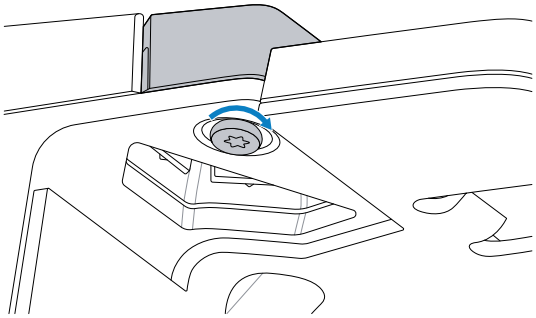

Installing the CFS Pole and Cable

This section describes how to install the CFS pole and USB cable.

1. Route the USB cable from the CFS through the opening in the MP72, ensuring the cable is vertical in the pole slot.

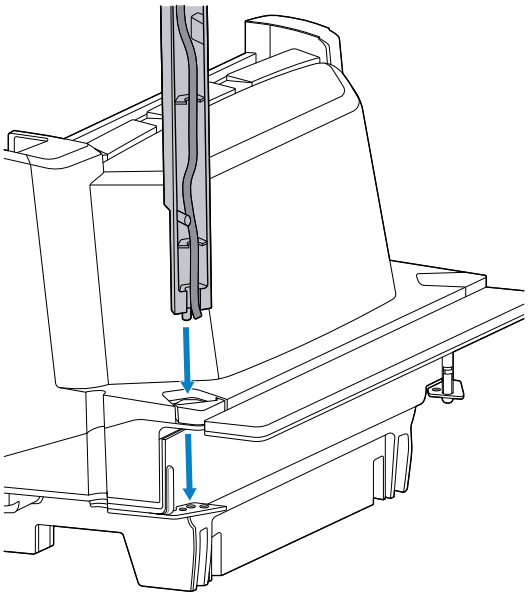

2. Guide the CFS pole so the alignment pin on the pole enters the mating hole on the bracket.

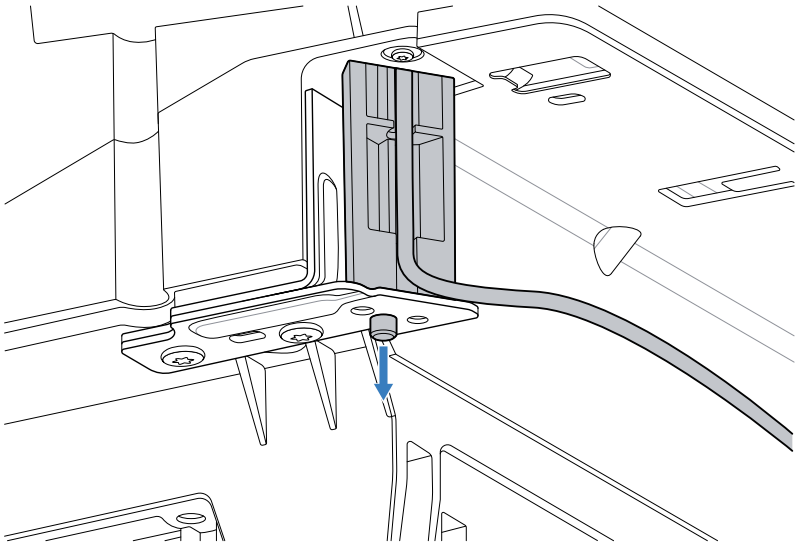

3. Attach the two T20 screws to mount the CFS pole to the bracket, and torque to 1.36 Nm +/- 0.03 (12 in-lb +/- 0.25).

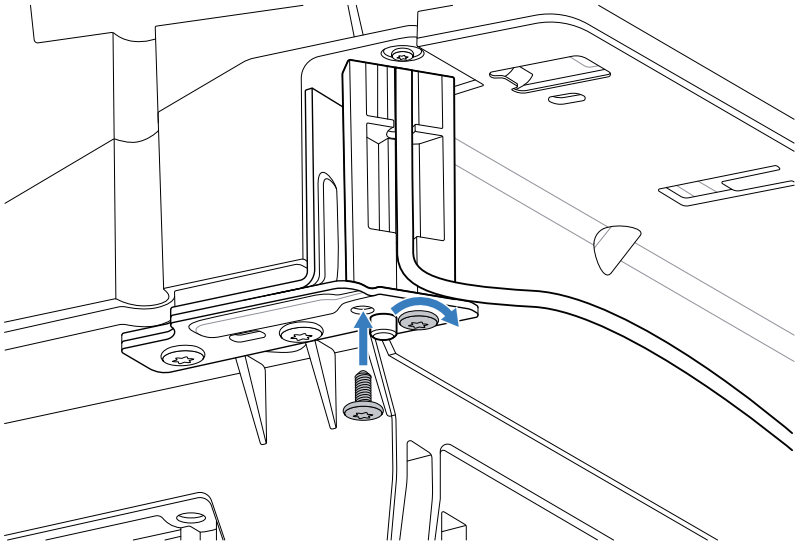

4. Route the USB cable towards the MP72, through an open guiding slot in the CFS mount, pulling the cable taught when routing so it remains in the CFS pole slot after installation.

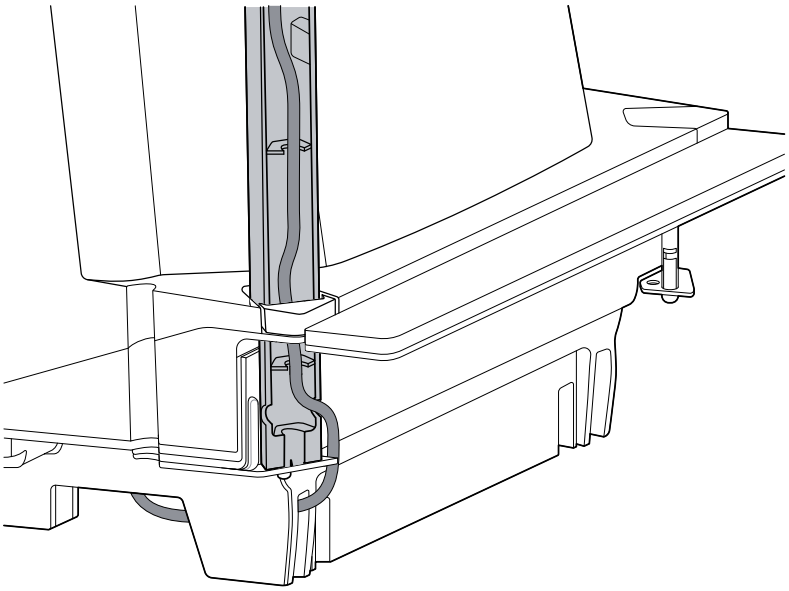

5. Connect the USB cable to an open USB port.

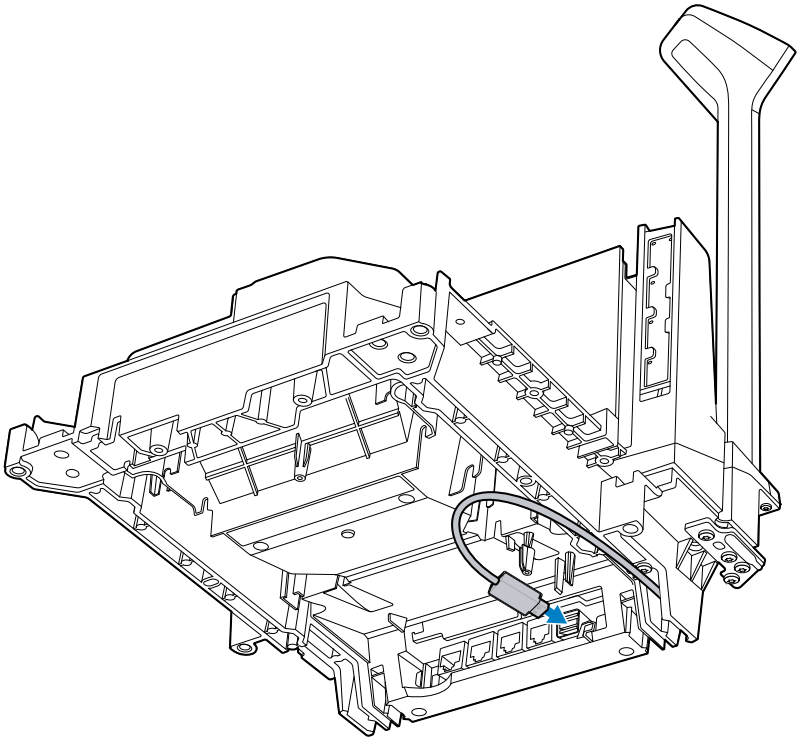

NOTE: If the CFS is mounted on the opposite side of the MP72, the USB cable routes from the other direction.

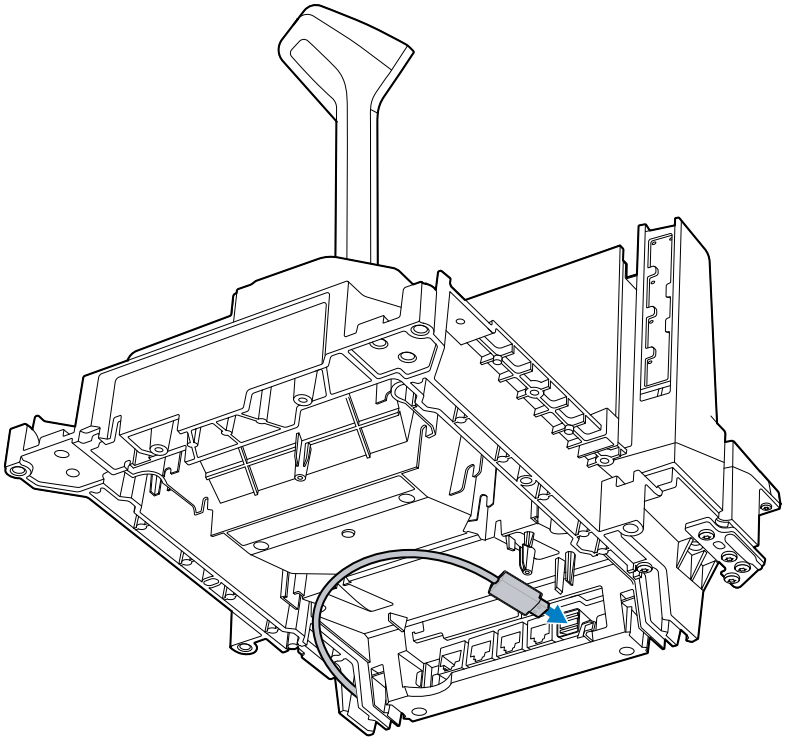

EAS Devices

The MP72 supports an optional Checkpoint or Sensormatic EAS antenna. The device nests in the MP72 upper housing.

The Sensormatic antenna must be installed by a Sensormatic representative.

Sensormatic Antenna

The antenna is installed inside the upper housing, behind the vertical glass and below the platter, and is secured with clips. The antenna cable is routed alongside the scanner and out the corner of the MP72, near the vertical window, and connects to the Sensormatic controller box.

IMPORTANT: Contact your local Sensormatic representative for EAS antenna installation. Refer to the Sensormatic device documentation for details on functionality.

NOTE: Isolate the Sensormatic antenna cable from other cabling as much as possible.

Figure 20 Sensormatic Antenna

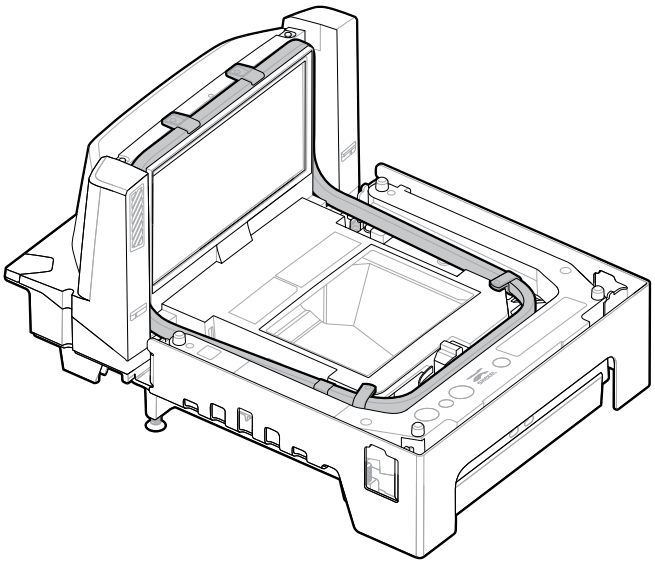

Installing the Checkpoint Antenna

The Checkpoint antenna is installed inside the upper housing below the platter, and loops around the top of the vertical window. The antenna cable is routed alongside the scanner and connects to the controller box.

WARNING: Improper installation of Checkpoint antennas can cause issues with scale functionality.

To install the antenna:

1. Remove the MP72 platter.

2. Set the antenna in place in the upper housing of the MP72, around the vertical window and into the body of the device.

Figure 21 Lower Antenna into Housing

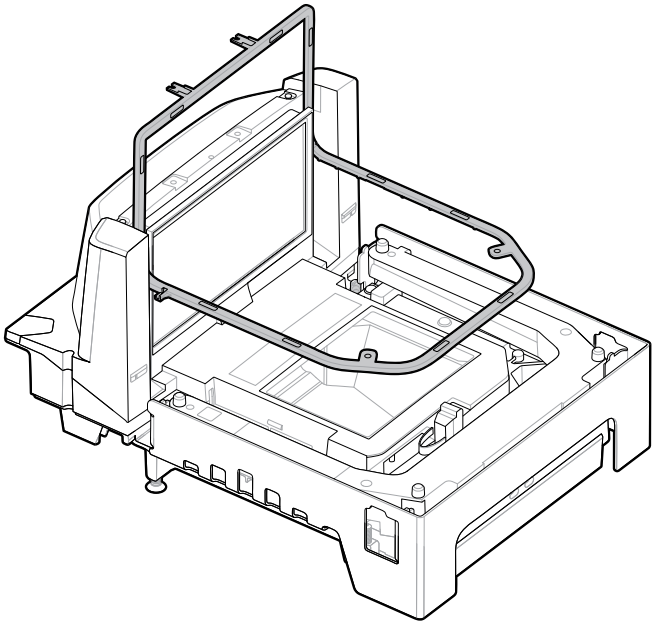

Figure 22 Set Antenna in Place

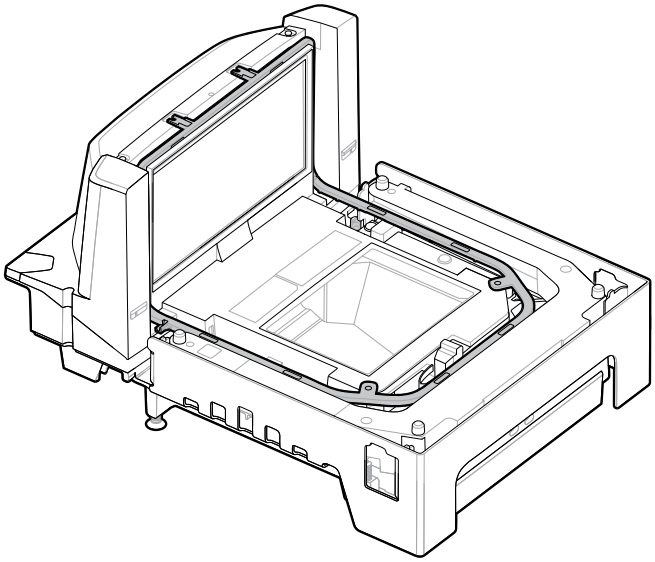

3. Use the four screws provided to secure the antenna to the housing using a T8 Torx screwdriver.

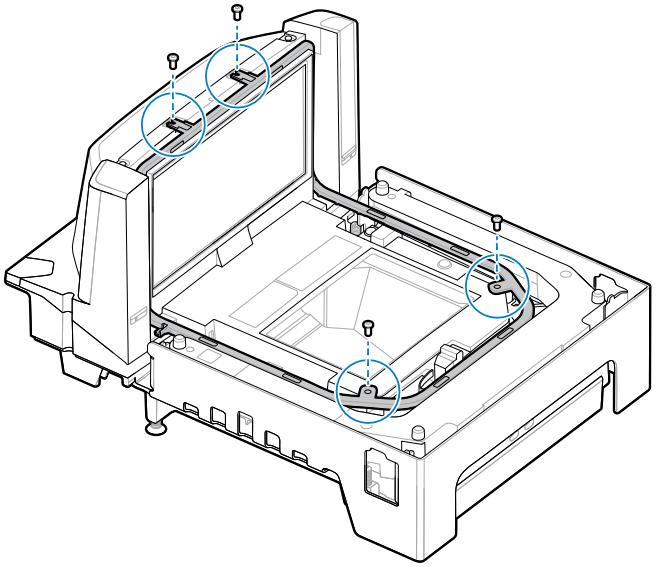

4. Route the antenna cable alongside the scanner and out the corner of the MP72, near the vertical window.

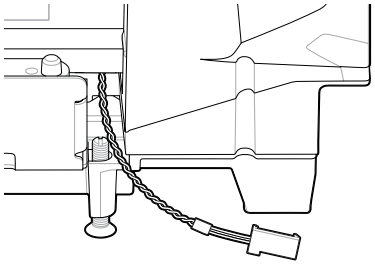

NOTE: The connector on the antenna cable shown is an example only. Use the connector appropriate for the specific EAS controller.

5. Contact your local Checkpoint representative to install the EAS cable to the Checkpoint System. Refer to the Checkpoint device documentation for details on functionality.
6. Replace the platter.

Installing the Optional Trim Kit

Use the MX303-SB-05 trim kit to modify the long MP72/scale to fit into a counter cut-out previously occupied by a 12 in. wide NCR scanner/scale. Mount the trim on either side of the MP72, on the downstream side of the conveying goods. The trim adds 1.2 cm (0.5 in.) to the width of the MP72.

The kit includes one metal trim, and two Phillips head screws (M4 x 8mm).

1. Insert the two screws provided in the metal trim.
2. Orient the adapter as shown.

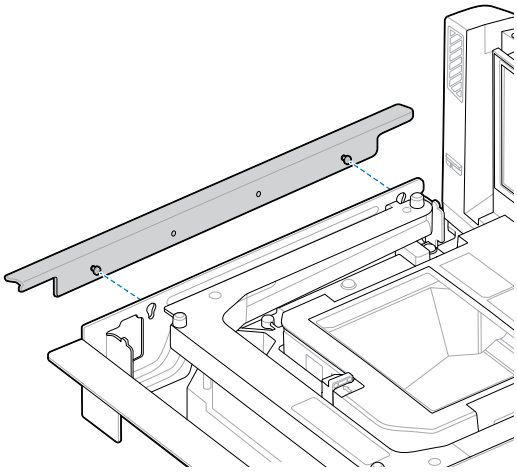

3. Attach the metal trim to the MP72, and tighten using a Phillips head screwdriver.

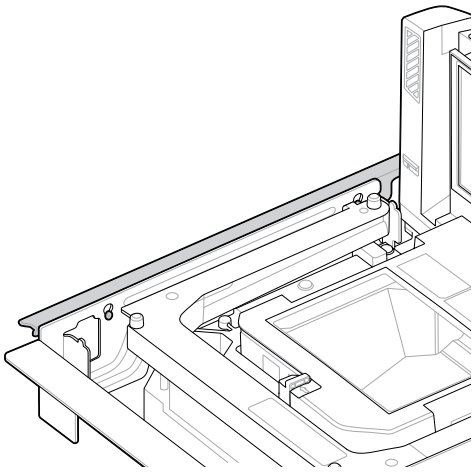

MP72 Scanner Scale Installation

Ensure all components of the MP72 and scale (if applicable) and cables are ready to install (see Unpacking MP72 Scanner Scale Equipment).

Checkstand Counter Cutouts and MP72 Dimensions

There are three sets of dimensions for counter cutouts based on the MP72 configuration to install. Ensure cut edges are clean and straight, with all burrs and splinters removed.

The MP72 is 11.5 in. wide. If replacing an existing scanner in a checkstand that is 12 in. wide, using a Trim Filler Kit is recommended to fill the gap in the checkstand (see Trim Kit Installation (If Required)).

The MP72 is 4 in. deep. If replacing an existing 5 in. deep short or medium scanner, you must use the 1 in. longer leveling screw kit (p/n MX302-SR00004ZZWR) to bring the platter up to the countertop level.

Cutout/Dimensions - MP72 Short Configuration

Figure 23 Short Configuration (No Scale) Counter Cutout

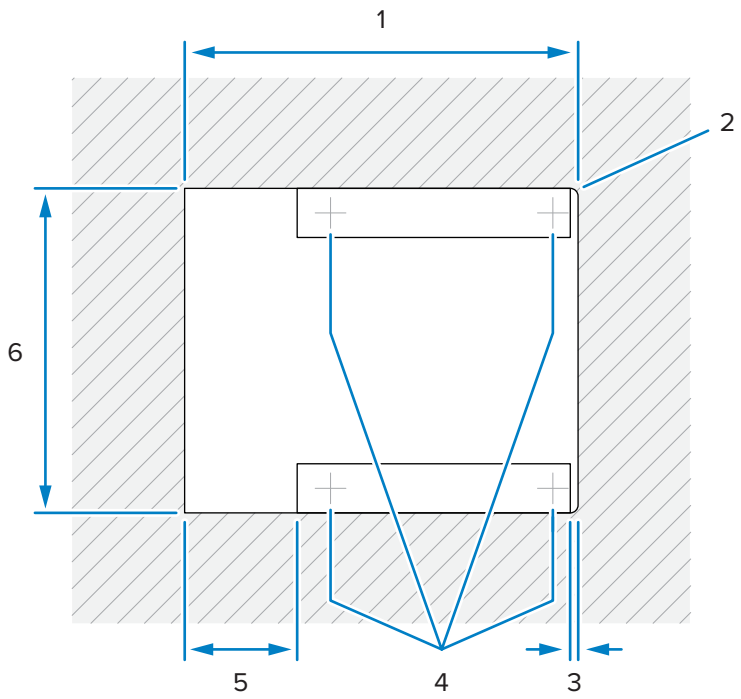

Item	Description
1	356.2 ±1.5 mm / 14.03 ±0.06 in.
2	Max R 6.35 mm / 0.25 in.; 2x cashier side
3	Max 6.4 mm / 0.25 in.
4	Optional leveling feet locations
5	Max 101.6 mm / 4.0 in.
6	295.3 ±1.5 mm / 11.63 ±0.06 in.

Figure 24 Short Configuration (No Scale) Top View Dimensions

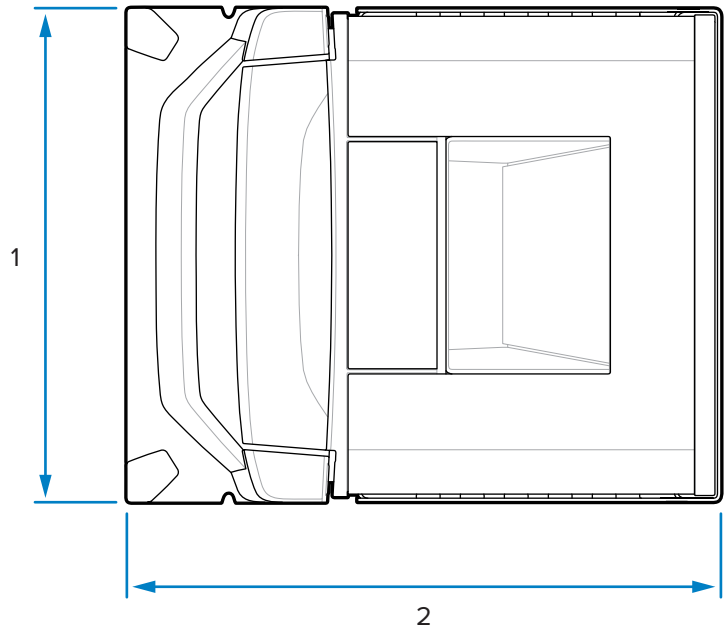

Item	Description
1	292.0 mm / 11.50 in.
2	350.9 mm / 13.81 in.

Figure 25 Short Configuration (No Scale) Side View Dimensions

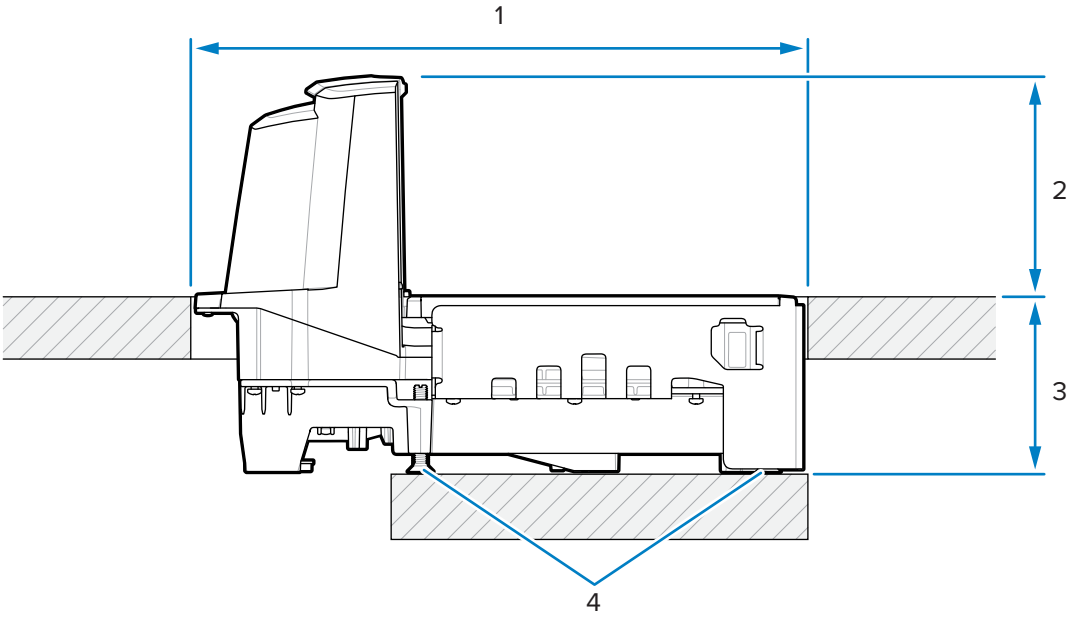

Item	Description
1	356.2 ±1.5 mm / 14.03 ±0.06 in. (counter opening)
2	128.0 mm / 5.04 in.
3	101.0 mm / 3.98 in.
4	Optional leveling screw kit: MX301-SR00004ZZWR or MX302-SR00004ZZWR

Figure 26 Short Configuration (No Scale) Front View Dimensions

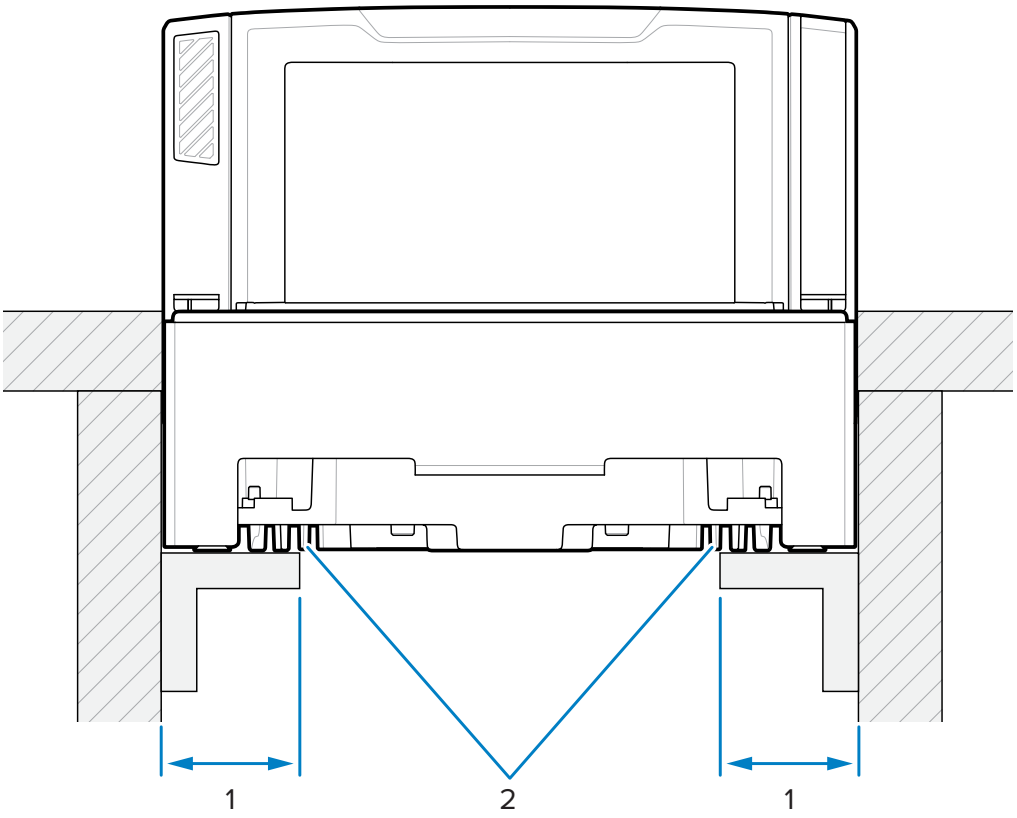

Item	Description
1	44.5 ±6.6 mm / 1.75 ±0.25 in.
2	Support rails

IMPORTANT: Use the support rails as shown, and not a shelf. If liquid spills it pools on a shelf.

Cutout/Dimensions - MP72 Medium Configuration

Figure 27 Medium Configuration Counter Cutout

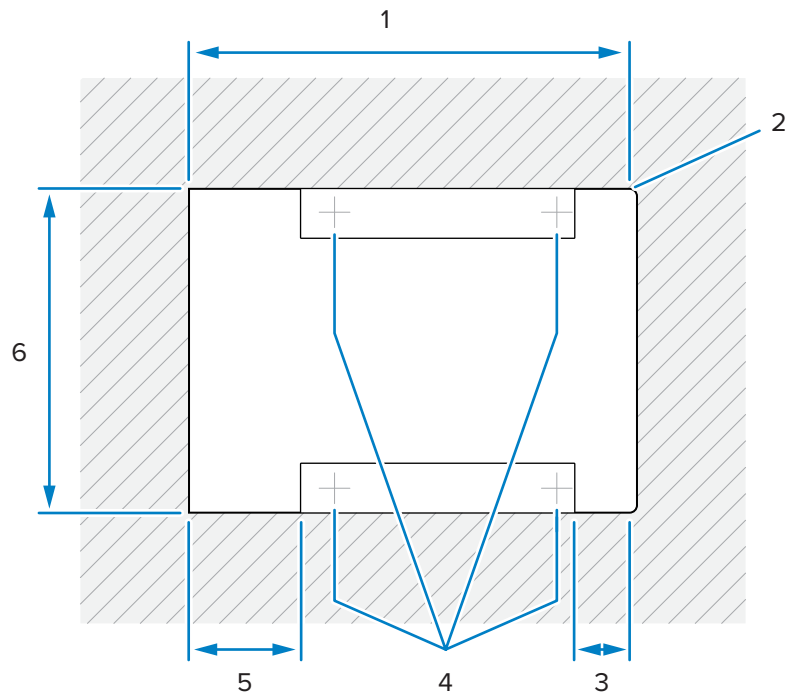

Item	Description
1	402.0 ±1.5 mm / 15.83 ±0.06 in.
2	Max R 6.35 mm / 0.25 in.; 2x cashier side
3	Max 50.8 mm / 0.25 in.
4	Optional leveling feet locations
5	Max 101.6 mm / 4.0 in.
6	295.3 ±1.5 mm / 11.63 ±0.06 in.

Figure 28 Medium Configuration Top View Dimensions

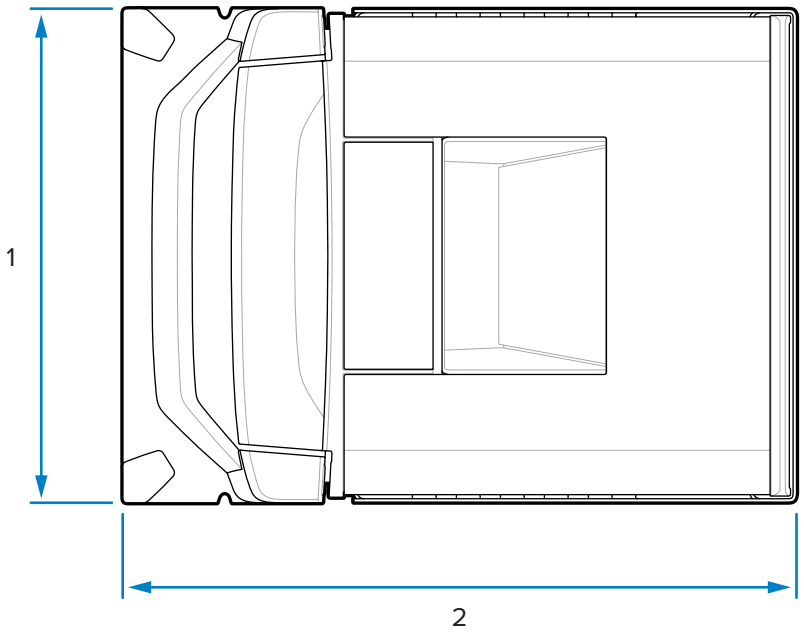

Item	Description
1	292.0 mm / 11.50 in.
2	397.9 mm / 15.66 in.

Figure 29 Medium Configuration Side View Dimensions

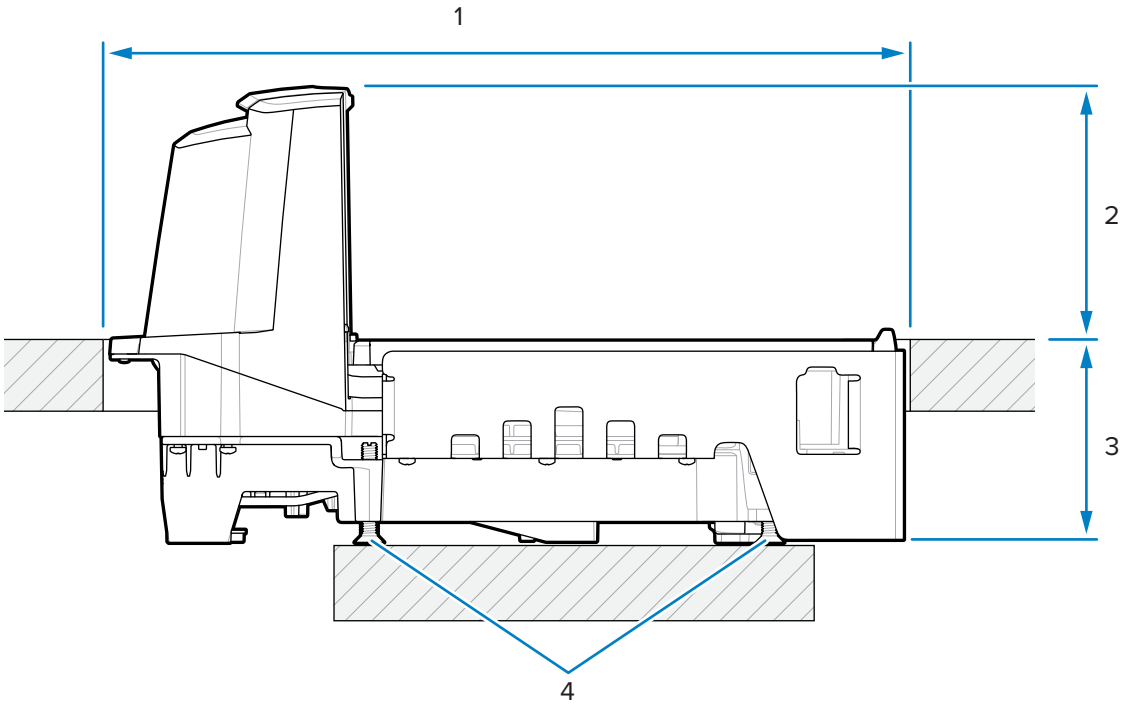

Item	Description
1	402.0 ±1.5 mm / 15.83 ±0.06 in. (counter opening)
2	128.0 mm / 5.04 in.
3	101.0 mm / 3.98 in.
4	Optional leveling screw kit: MX301-SR00004ZZWR or MX302-SR00004ZZWR

NOTE: Leveling screws accessory kit MX301-SR00004ZZWR is shipped with every short and medium configuration. Longer leveling screws with a 25 mm (1 in.) extra length are available for purchase, if required (accessory kit p/n MX302-SR00004ZZWR).

Figure 30 Medium Configuration Front View Dimensions

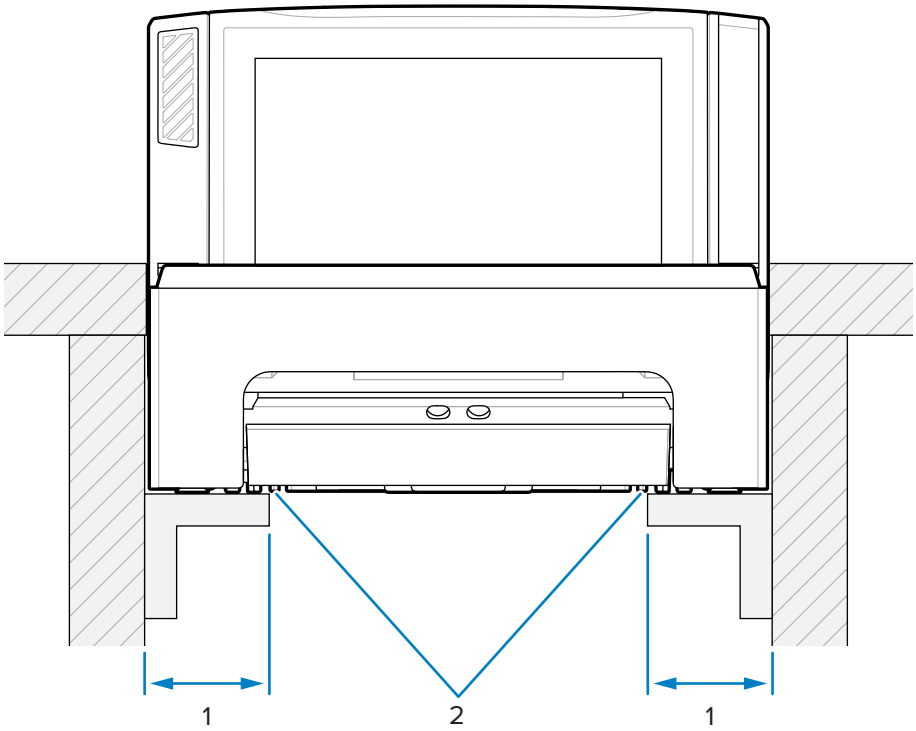

Item	Description
1	44.5 ±6.6 mm / 1.75 ±0.25 in.
2	Support rails

IMPORTANT: Use the support rails as shown, and not a shelf where spilled liquid can pool.

Cutout/Dimensions - MP72 Long Configuration

Figure 31 Long Configuration Counter Cutout

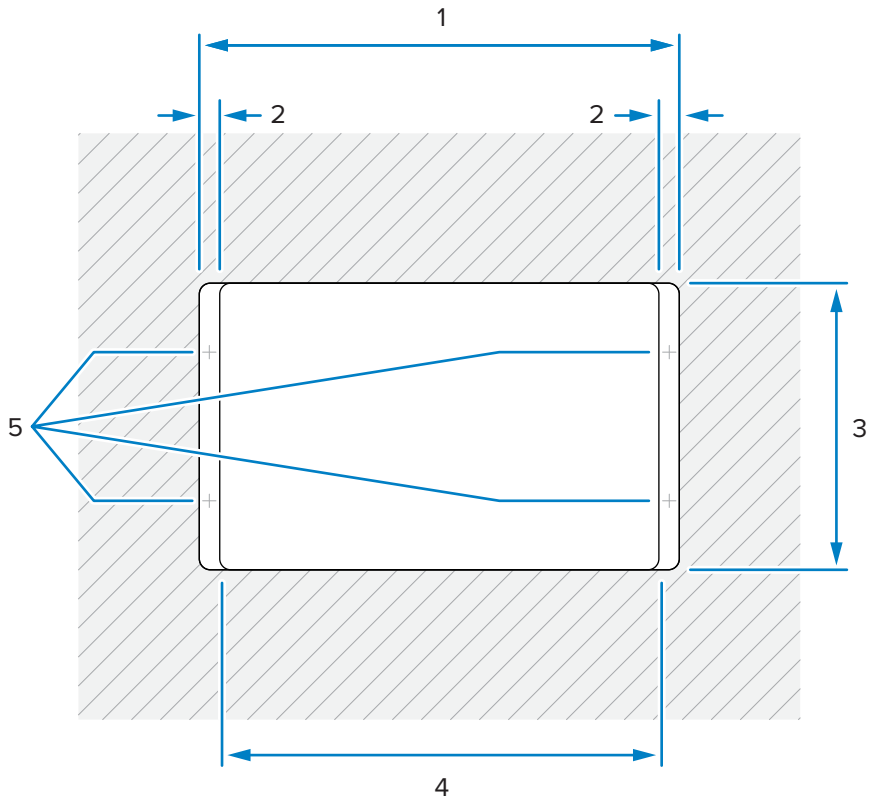

Item	Description
1	511.2 ±1.5 mm / 20.13 ±0.06 in.
2	Min 19.1 mm / 0.75 in. Max 42.0 mm / 1.65 in. Max 31.0 mm / 1.22 in. (cashier side)
3	295.3 ±1.5 mm / 11.63 ±0.06 in.
4	Max 473.1 mm / 18.63 in.
5	Typical checkstand leveling screw locations

Figure 32 Long Configuration Top View Dimensions

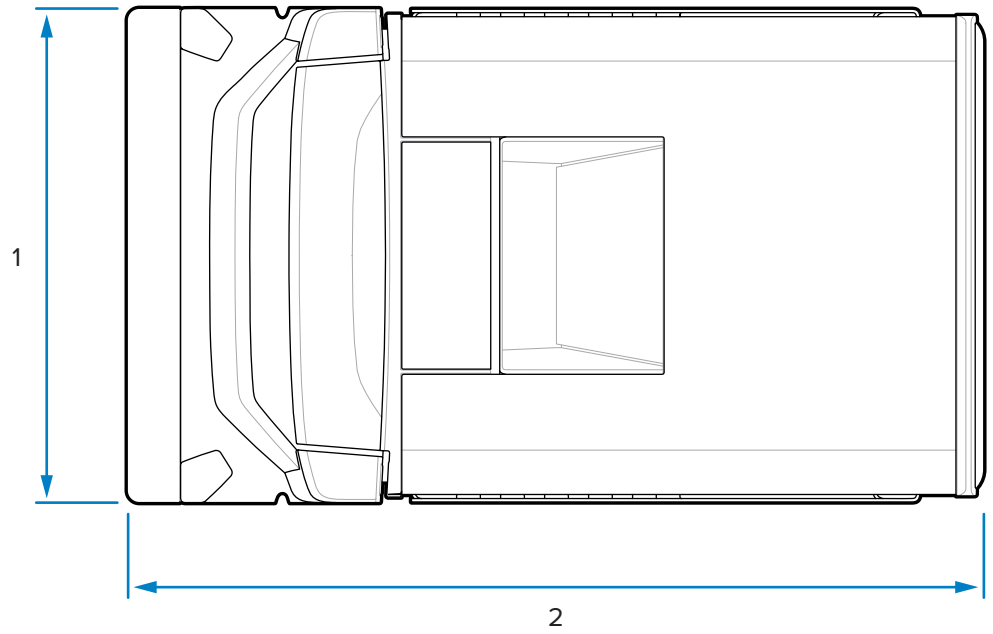

Item	Description
1	292.2 mm / 11.50 in.
2	505.7 mm / 19.90 in.

Figure 33 Long Configuration Side View Dimensions

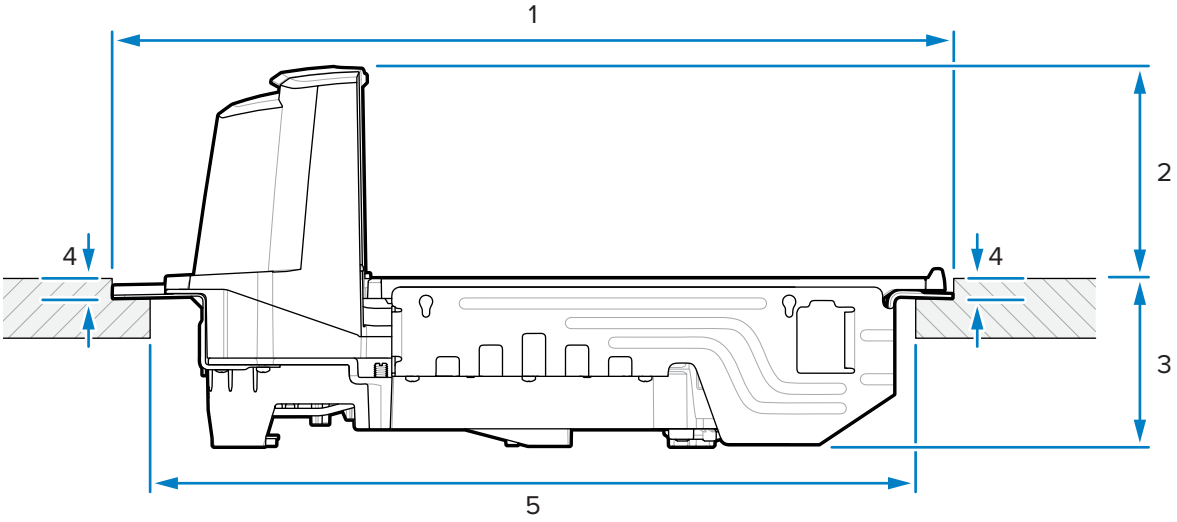

Item	Description
1	511.2 ±1.5 mm / 20.13 ±0.06 in. (counter opening)

Item	Description
2	128.5 mm / 5.06 in. (counter to top of unit)
3	100.6 mm / 3.96 in. (counter to bottom of unit)
4	10.0 ±0.8 mm / 0.39 ±0.03 in.
5	Max 473.1 mm / 18.63 in.

NOTE: After routing, the countertop must have sufficient strength to support the scanner and the loads placed on top of it. If required, add strengthening supports underneath the countertop.

Installing the MP72 Scanner Scale

This section details MP72 installation.

To install the MP72:

1. Ensure the following items were completed:
   a. Existing scanner and accessories were removed, if applicable. See Removing Existing Scanner Scale and Accessories.
   b. The Scale Display was installed, if applicable. See Installing the Scale Display.
   c. CFS was installed, if applicable. See Installing the Customer Facing Scanner.
   d. Sensormatic coil or Checkpoint EAS antenna was installed, if applicable. See Installing the Sensormatic Coil Antenna or Installing the Checkpoint Antennas.

   Verify the checkstand dimensions shown in Checkstand Counter Cutouts and MP72 Dimensions.

2. Lower the scanner into the checkstand:

   a. Raise the handles on either side of the horizontal window, and grasp them to lower the MP72 into the checkstand.

   Figure 34 Lowering into Counter (Short/Medium Configuration)

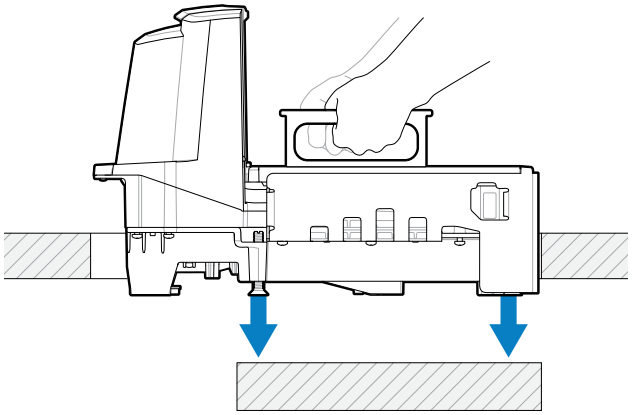

   Figure 35 Lowering into Counter (Long Configuration)

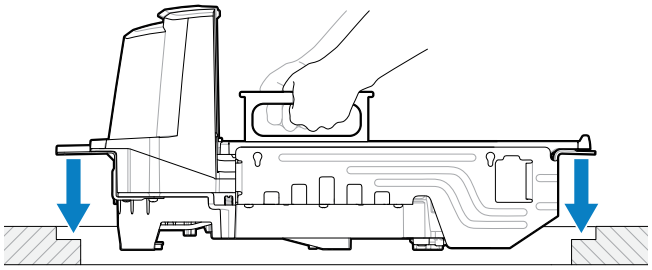

   b. Lower the handles so they are flush with the horizontal window.

Figure 36 Lowering Handles (Short/Medium Configuration)

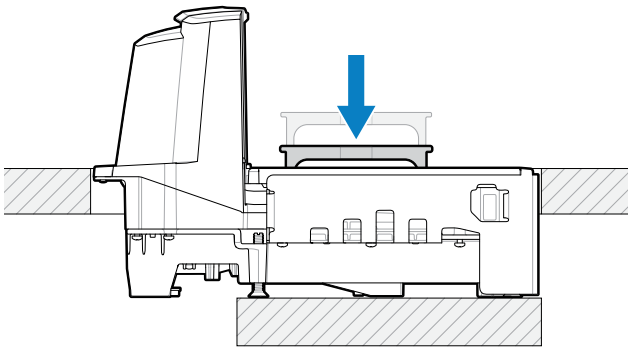

Figure 37 Lowering Handles (Long Configuration)

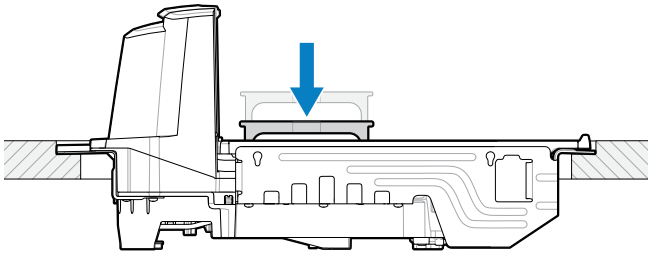

3. Install the platter.

4. Ensure the device is seated properly:
   a. For the long MP72 configuration, ensure the MP72 does not rock on the adjustable supports (screws) of the checkstand, and the platter is flush with the surrounding checkstand. If the MP72 rocks, remove it, and adjust the checkstand supports (screws) until it sits solidly in the checkstand.
   b. For the medium and short configuration, if the platter is not flush, or the MP72 rocks, adjust the leveling screws (1) to place the device at the correct height. This can be done from the top of the MP72, with the platter removed.

   Figure 38 Adjusting Leveling Screws (Medium and Short Configurations)

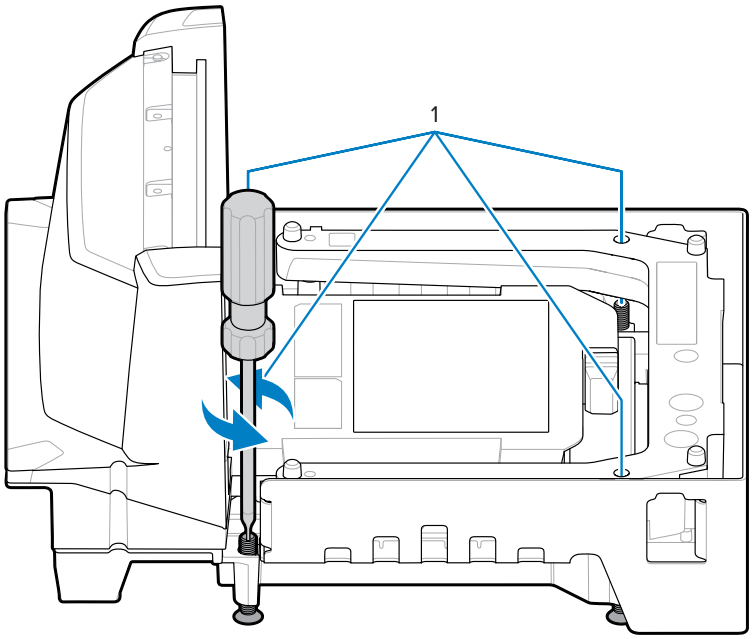

IMPORTANT: Standard length leveling screws ship with all short and medium configurations (kit MX301-SR00004ZZWR).

Four longer length screws are available as an accessory (kit # MX302-SR00004ZZWR) which protrude 25 mm (1 in.) below the bottom of the unit. See Leveling Screws for the installation location for these screws and for access hole locations for turning the screws from above.

   c. When the platter is flush, its leading edge should be slightly below the checkstand, and the trailing edge should be slightly above the checkstand.
   d. To ensure smooth scanning, ensure the platter is in place, and slide a steel can (e.g., a soup can) over the platter in the standard scanning direction with the harsher seam of the can facing down. The can should not catch on the checkstand or the platter when swept across all sections of the platter.
   e. For the long configuration, secure the screws in place with lock nuts.
5. Route all cables through the checkstand as shown in Checkstand Preparation.
6. Connect all cables to the MP72 and POS, as needed (e.g., scale, Scale Display, Checkpoint antenna, Sensormatic coils, POS, CFS).

7. Power up the MP72. The MP72 verifies that all sub-systems and auxiliary devices are operational. If a fault condition exists, an error displays on the 7-segment display, and the startup sequence halts. Correct the fault and then power cycle the MP72. See General Error and Warning Codes.

   Warm-up time for the optional scale is 30 minutes (assuming room temperature is 20° C (70° F).

IMPORTANT: Most accessories (scale, Scale Display, Checkpoint interlock, Sensormatic coils, Sensormatic RS-232 cable, CFS, and auxiliary RS-232 scanners) must be installed and connected prior to applying power to the MP72.

Cables and Connections

When routing the power and interface cables for the MP72:

- Do not route interface cables in close proximity to electrical motors or other sources of electromagnetic interference.
- Cables can drop directly from their connectors on the scanner or, alternatively, can be routed along the scanner's side to the back.
- Connect the power cable to the MP72 before plugging the AC power cord into the AC outlet.

Scale Calibration

This section describes how to calibrate and program the MP72 scale. Included parameter barcodes are listed below.

NOTE: For all scanner programming barcodes and additional scale parameter barcodes, refer to the MP72 Scanner Scale Barcode Programming Guide.

Table 19 Scale Parameters in this Section

Parameter	Parameter Number	Parameter Name
Legal Scale Units	995	Kilograms (default)
		Pounds
Scale Display Configuration	986	Disable Scale Display (default)
		Enable Scale Display
Legal Scale Dampening Filter	996	Normal (Higher) Vibration Sensitivity
		Low Vibration Sensitivity
		Very Low Vibration Sensitivity (default)
		Ultra Low Vibration Sensitivity

Scale Configurations

The MP72 offers the following scale configurations.

- MP7201 - Single interval 0.01 lb (0.005 kg) minimum weight resolution without calibration switch
- MP7202 - Dual interval 0.005 lb (0.002 kg) minimum weight resolution without calibration switch
- MP7203 - Single interval 0.01 lb (0.005 kg) minimum weight resolution with calibration switch
- MP7204 - Dual interval 0.005 lb (0.002 kg) minimum weight resolution with calibration switch

IMPORTANT: Use only one calibration entry method (electronic or manual) for scale configuration.

Remove the MP72 platter to view the model number (P/N) of the MP72 Bi-optic system, which is affixed on the top left-hand side of the bottom panel. The last two digits in the **MP72XX...** model number define the scale's configuration.

Scale Calibration Notes

Note the following during scale calibration.

- The 30-second timer resets after each successful calibration stage (not applicable at Calibration Success or Failure stage).
- If a Scale Display is unavailable, use the internal 7-segment one-character display to guide scale calibration.
- If using a Scale Display during calibration, enable Scale Display Configuration to enable the display and its port. Scale Display Configuration is disabled by default.
- The MP72 scanner/scale must remain powered for at least 30 minutes after a cold power start before calibration.
- At any time during calibration, if the units of measure are modified (for example, lb to kg) and a 30-second timeout completes, the Scale Display flashes CAL, and the 7-segment display has a U14 warning code (indicating Scale Out of Calibration).

Calibrating the Scale

All the following procedures are required for scale calibration.

1. Enter calibration mode (electronically or manually).
2. Program legal parameters.
3. Perform calibration at no load.
4. Perform calibration at load.
5. Finalize the successful calibration.

Enter Calibration Mode

Enter calibration mode electronically for scales sold without a mechanical calibration switch installed, or manually for scales sold with a mechanical calibration switch. Some Weights and Measures regulatory jurisdictions require a mechanical calibration switch.

Electronic Entry into Calibration Mode

For scales sold without a mechanical calibration switch installed, perform an electronic calibration entry.

1. Press and hold the Scale Zero and Volume buttons for five seconds until a short beep sounds, and then release the buttons.
2. Within two seconds after releasing the buttons, press the Scale Zero and Volume buttons again and release.

   If calibration mode is entered successfully, the system sounds five long beeps. The optional Scale Display blinks CAL00 and CAL _ _ and the 7-segment display scrolls C00Lb or C00g. Continue to Program Legal Parameters.

IMPORTANT: If Calibration Mode was not entered successfully, the scale remains in its current state.

Manual Entry into Calibration Mode

For scales sold with a mechanical calibration switch installed, calibrate the scale manually. Some Weights and Measures regulatory jurisdictions require a mechanical calibration switch.

1. Remove the platter (see Removing the Short or Medium Platter).
2. If applicable, remove the security seal (paper labeled seal or tamper-evident film seal) over the calibration switch cover plug.
3. Remove the calibration switch cover plug.
4. Press and release the calibration switch (1).

Figure 39 Scale/Calibration Switch

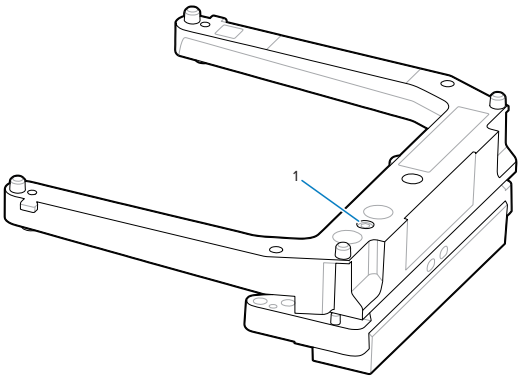

5. Reinstall the platter and ensure there is no weighted load on the platter.

With successful entry into Calibration Mode, the scanner emits five long beeps. The Scale Display blinks CAL00 and CAL _ _ and the 7-segment display scrolls C00Lb or C00g. Continue to Program Legal Parameters.

IMPORTANT: If Calibration Mode was not entered successfully, the scale remains in its current state, or the Scale Display blinks CAL F. If the display blinks CAL F, correct the issue before re-entering calibration to enable an operational scale.

Program Legal Parameters

The MP72 must be in Calibration Mode to optionally change the sealable and legal parameters (Unit Selection and Dampening Filter Setting). The Dampening Filter Setting can be changed multiple times during Calibration Mode without affecting the calibration outcome.

After completing any necessary changes, the calibration process re-starts with Calibration at NO LOAD. If you change the Unit Selection value before successfully reaching Calibration Success or Failure and the Calibration Mode exits, the scale remains non-operational until it is successfully calibrated.

Legal Scale Units (Unit Selection) - Kilograms or Pounds

This section addresses selecting the legal parameter unit (when the scale is in Calibration Mode).

IMPORTANT:

- Automatic zero setting is enabled for metric scales (kg) and disabled for US scales (lb).

- If enabled, automatic zero setting is performed if the weight has remained below zero and stable (for example, no motion on the platter) for at least 5 seconds. The scale is automatically set to zero when the 5 seconds expires.
- If the weight units change from lb to kg, this setting is enabled after a cold power start of the MP72. A scale reset (for example, via the Scale Reset STISCLRST barcode) WILL NOT enable this setting. Likewise, if weight units change from kg to lb, this setting is disabled. This setting is illegal for US (lb) scales.

To change the legal parameter Unit Selection (when the scale is in a Calibration Mode):

1. Verify the units of weight measurement by checking the Scale Display icon (the icon displays either lb or kg units), or the 7-segment display which scrolls either lb or g (g indicates kg).
2. If the weight unit must be changed (for example, from kg units to lb), scan the appropriate barcode in Legal Scale Units. If you do not change the default or current weight unit, the scale calibrates with the default (kg) or previously programmed unit.

NOTE: The unit selection legal parameter can be scanned at any time after entering Calibration Mode. After a successful scan, Calibration Mode restarts at Calibration at NO LOAD.

For additional scale parameter barcodes, refer to the MP72 Scanner Scale Barcode Programming Guide.

Legal Scale Dampening Filter

Set the scale sensitivity to vibration by scanning a Legal Scale Dampening Filter Setting barcode while the scale is in Calibration Mode.

Options are:

- 0 = Normal (Higher) (most sensitive to vibration)
- 1 = Low
- 2 = Very Low (default)
- 3 = Ultra Low

The lower the number, the more sensitive the scale is to vibration. The higher the number, the slower the scale may operate.

Calibration at NO LOAD

IMPORTANT: Complete this calibration step within 30 seconds, or the calibration procedure exits.

Upon successful entry into Calibration Mode, the Scale Display blinks between CAL00 and CAL _ _, and the 7-segment display scrolls C00Lb, or C00g. Scale calibration can begin.

1. Ensure the platter is installed and there is no weighted load on it.
2. Touch the Scale Zero button on the front panel.
3. If Calibration at NO WEIGHTED LOAD is successful, continue to Calibration at LOAD.

   If Calibration at NO WEIGHTED LOAD is not successful, see Calibration Failure.

Calibration at LOAD

Continue calibration at LOAD after calibrating at NO LOAD.

IMPORTANT: Complete this calibration step within 30 seconds, or the calibration procedure exits.

The Scale Display blinks either CAL25 or CAL11, depending on the units of measure programmed (CAL25 = pounds; CAL11 = kilograms). The diagnostic 7-segment display scrolls C25Lb or C11g.

To continue with calibration:

1. Depending on the units of measure programmed, place 25 lb or 11 kg on the scale. Group the weights in the center of the scale for best results.

Figure 40 Center of Scale Location without and with Platter Installed

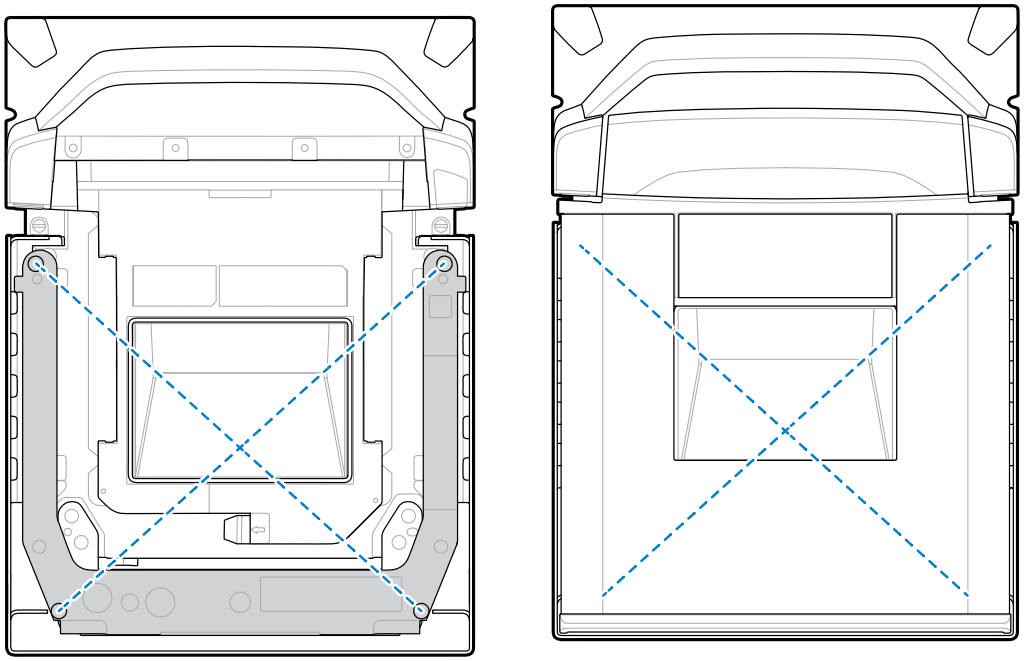

If using 25 lb weights, place them on the scanner as shown; three 5 lb weights centered on the center of the scale, and two 5 lb weights centered on top.

Figure 41 Weight Calibration Configuration for Pounds

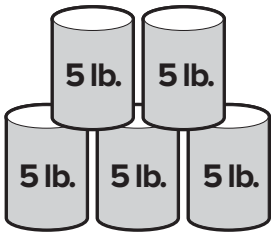

If using 11 kg weights, place them on the scanner as shown; two 5 kg weights centered on the center of the scale, and one 1 kg weight on top between the two 5 kg weights.

Figure 42 Weight Calibration Configuration for Kilograms

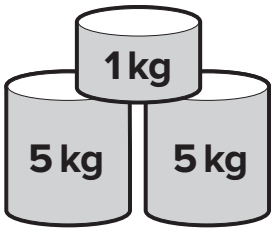

2. Press the Scale Zero button.

Continue calibration with Calibration Success or Failure.

Calibration Success or Failure

This section describes calibration success or failure.

Calibration Success

When calibration is successful, the Scale Display blinks between CAL P and CAL S, and the 7-segment display scrolls between CAL P and CAL S.

NOTE: P = pass; S = Save and Reset the Scale.

To finalize calibration:

1. When the Scale Display starts blinking between CAL P and CAL S, remove the weights from the scale.
2. Touch the Scale Zero button to reset the the MP72 Bi-optic system. The MP72 emits three short beeps to indicate that the calibration was successful and all parameters are saved.

   Or

   Scan the Scale Reset barcode (or issue an equivalent RSM command to the MP72). Refer to the MP72 Scanner Scale Barcode Programmers Guide for all programming barcodes.

NOTE: Scan Scale Reset at any time to exit the calibration process with no impact (as long as a Legal Parameter was not changed during calibration).

The scale is ready to measure weight.

IMPORTANT: If you used the manual calibration entry method and performed a successful calibration and verification, install a new security seal. Reinsert the calibration cover plug aligning the hole in the screw with the hole in the scale U-bar, then insert, or use a tamper evident paper seal or label over the plug. This is the approved sealing method.

Calibration Failure

If calibration fails, the Scale Display blinks CAL F, and the error code u## scrolls on the 7-segment display (see Scale Fault Codes). Use the error message indicators to correct the problem and restart calibration.

Possible reasons for failure include:

- The scale returns to its prior state if Calibration at NO LOAD executes. The Scale Display blinks HOLD for the 30 second time period, and then times out. This condition does not display a calibration failure because the process was unable to find a zero-weight threshold. This may occur if the platter was not re-installed or seated correctly or if the weight on the scale is outside a +/- 2% maximum capacity range (+/- 0.6 lb or +/- 0.3 kg). Incorrect scale installation may also cause this.
- The scale returns to its prior state if Calibration at LOAD executes, but the scale was unable to detect a load of 25 lb / 11 kg. This may occur if the correct weights were not placed on the platter before pressing the Scale Zero button. Incorrect scale installation may also cause this.

In either case, there is no impact on the sealed calibration counter or the scale legal parameter counter. However, if calibration fails, the scale is non-operational until the problem is addressed and the scale is successfully calibrated. Re-enter Calibration Mode. The scale does not have to be reset and can be left on before re-entering this mode.

Calibration Mode Exit Conditions

This section lists the conditions under which Calibration Mode exits.

- No response is received from an external operator for 30 seconds. This timeout does not apply at Calibration Success or Failure.
- The operator shuts off the MP72.
- Calibration at LOAD completes successfully or unsuccessfully (fails).
- The user scans Scale Reset, which runs a test in which the optional Scale Display displays a series of characters (see Cold reset of scale in LED and Beeper Sequences). When the test completes, the scale returns to its prior state before entering a scale Calibration Mode. Refer to the MP72 Scanner Scale Barcode Programming Guide.

Verification Test

The following table describes the five tests required to verify whether or not the scale was calibrated successfully.

Table 20 Tests to Verify Scale Accuracy

Test	Description
Increasing Load Test	Verifies accurate weight measurement with increasing weights placed incrementally on the scale's platter, without returning weight to zero.
Over Capacity Test	Verifies that the correct indication appears on the Scale Display when the maximum weight is exceeded.
Decreasing Load Test	Verifies accurate weight measurement with decreasing weights removed incrementally from the scale's platter, without returning weight to zero.
Return to Zero Test	Verifies that the scale returns to zero when all weights are removed.
Shift Test	Verifies accurate weight measurement in all quadrants.

The verification tests listed in the following tables can be run in successive order. Use the appropriate table based on US (lb) or metric scales (kg) using applicable tolerance for single or dual interval scale models.

Table 21 Verification Tests for US (lb) Scales

Verification Test for US Scale Applied Load lb	Indication = Applied Load Within Applicable Tolerances	All Tolerances Are +/-	All Tolerances Are +/-
		Acceptance Single Int	Acceptance Dual Int
Increasing Load Test			
0.00	0.00	0.0 lb	0.0 lb
0.10	0.10	.005 lb	.0025 lb
5.00	5.00	.005 lb	.005 lb
10.00	10.00	.01 lb	.005 lb
20.00	20.00	.01 lb	.01 lb
30.00	30.00	.015 lb	.015 lb

Table 21 Verification Tests for US (lb) Scales (Continued)

Verification Test for US Scale Applied Load lb		Indication = Applied Load Within Applicable Tolerances	All Tolerances Are +/-	All Tolerances Are +/-
			Acceptance Single Int	Acceptance Dual Int
Over Capacity Test				
Over Capacity 30.20		EEEE	N/A	N/A
Decreasing Load Test				
30.00		30.00	.015 lb	.015 lb
20.00		20.00	.01 lb	.01 lb
10.00		10.00	.01 lb	.005 lb
5.00		5.00	.005 lb	.005 lb
0.10		0.10	.005 lb	.0025 lb
Return to Zero Test				
0.00		0.00	0.0 lb	0.0 lb
Shift Test (see Weight Positions on the Scale Platter).				
10.00	Position 1	10.00	.01 lb	.005 lb
10.00	Position 2	10.00	.01 lb	.005 lb
10.00	Position 3	10.00	.01 lb	.005 lb
10.00	Position 4	10.00	.01 lb	.005 lb

Table 22 Verification Tests for Metric Scale

Verification Test for Metric Scale Applied Load kg	Indication = Applied Load Within Applicable Tolerances	All Tolerances Are +/-	All Tolerances Are +/-
		Acceptance Single Int	Acceptance Dual Int
Increasing Load Test			
0.000	0.000	0.0 kg	0.0 kg
0.100	0.100	.0025 kg	.001 kg
2.500	2.500	.0025 kg	.002 kg
5.000	5.000	.005 kg	.003 kg
10.000	10.000	.005 kb	.005 kg
15.000	15.000	.0075 kg	.0075 kg
Over Capacity Test			
Over Capacity 15.100	EEEE	N/A	N/A
Decreasing Load Test			
15.000	15.000	.0075 kg	.0075 kg

Table 22 Verification Tests for Metric Scale (Continued)

Verification Test for Metric Scale Applied Load kg		Indication = Applied Load Within Applicable Tolerances	All Tolerances Are +/-	All Tolerances Are +/-
			Acceptance Single Int	Acceptance Dual Int
10.000		10.000	.005 kg	.005 kg
5.000		5.000	.005 kg	.003 kg
2.500		2.500	.0025 kg	.002 kg
0.100		0.100	.0025 kg	.001 kg
Return to Zero Test				
0.000		0.000	0.0 kg	0.0 kg
Shift Test (see Weight Positions on the Scale Platter).				
5.00	Position 1	5.000	.005 kg	.003 kg
5.00	Position 2	5.000	.005 kg	.003 kg
5.00	Position 3	5.000	.005 kg	.003 kg
5.00	Position 4	5.000	.005 kg	.003 kg

The weight checked at each position on the scale as shown below represents halfway between the center of the platter and corner. Use a stack configuration of weights if needed (for example, (2) 5.00 lb weights, or (2) 2.500 kg weights) depending on the units of measure programmed.

Figure 43 Weight Positions on the Scale Platter

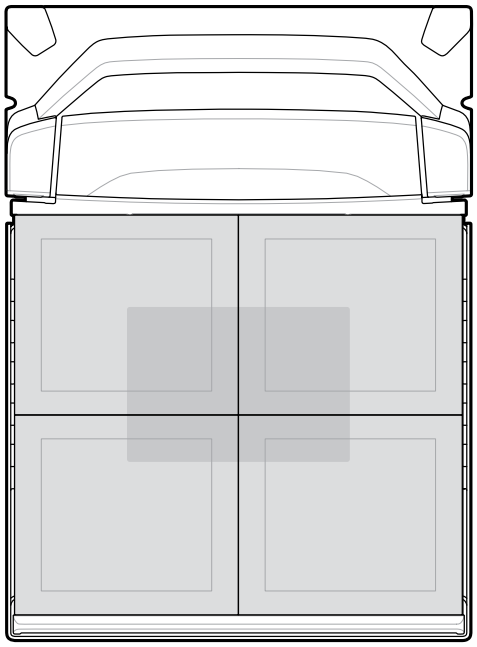

While performing a shift test, the indication of each position is within the applicable tolerance and the range of results obtained should not exceed twice the applicable tolerance.

IMPORTANT: After verification, record/report audit trail information to the local Weights and Measures authority where required by law.

Audit Tallies

Audit Tallies used for scale verification (calibration counter = C, legal parameter counter = P, Legally Relevant firmware version number = F) are shown on the Scale Display or the 7-segment display.

1. Press and hold the Scale Zero button for three seconds to access calibration tallies (not within Calibration mode). C###, P###, and #.##F tallies blink on the Scale Display and/or scroll on the 7-segment display.
   - C### represents the number of times the scale reached Calibration Success.
   - The P### represents the number of times any sealable parameter or legal parameter was changed with or without reaching Calibration Success.
   - #.##F represents the Legally Relevant firmware version number.
2. Release the Scale Zero button to return the scale to normal operation and remove tallies from both displays.

NOTE: This feature is inhibited when the unit is in a scale Calibration Mode.

Modifying the units of weight measure (for example, kg to lb) increments the parameter counter by two in the audit tally, because the Automatic Zero Setting legal parameter is enabled when changing from lb to kg, and disabled when changing from kg to lb.

3. After verification, seal the scale by recording/reporting Audit Trail or apply physical seal to models that contain a physical calibration switch. Report information as required by local Weight & Measures Regulations, or where required by law.

Scale Configuration Parameters

This section includes various parameters for configuring the scale.

NOTE: Refer to the MP72 Scanner Scale Barcode Programming Guide for all programming barcodes.

Legal Scale Units

Parameter # 995

Select a weight unit to set the legal weight units for the scanner. Select Kilograms for international units; select Pounds for the United States.

NOTE: This legal scale unit can only be programmed when the scale is placed into a legal scale calibration mode. Refer to the Integration Guide for detailed information about scale calibration.

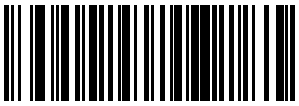

Kilograms (0)

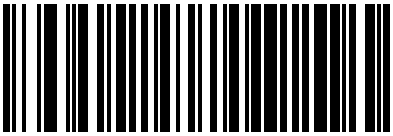

*Pounds (1)

Scale Display Configuration

Parameter # 986

Select **Enable Scale Display Configuration** to enable the pole display port. Scale Display Configuration is disabled by default.

- **Enable Scale Display Configuration**: When a pole display is installed and connected to the scanner/scale, the pole display shows weight, and/or additional alphanumeric information associated with the state of the scale. If a pole display is not connected, and **Enable Scale Display Configuration** is selected, the 7-segment display scrolls the code U23 indicating that there is a remote Scale Display communication error.
- ***Disable Scale Display Configuration**: Select this parameter when no Scale Display is installed. When a Scale Display is installed and connected to the scanner/scale, the Scale Display remains blank. The Scale Display can be installed and programmed in any mode of operation.

Refer to the Integration Guide for detailed information about the audit trail, scale calibration, and error/warning conditions.

Enable Scale Display Configuration (1)

*Disable Scale Display Configuration (0)

Legal Scale Dampening Filter Setting

Parameter # 996

Select an option to set the vibration sensitivity of the scale. The higher the number value, the less sensitive the scale is to vibration. The scale must be in a calibration mode to program this parameter.

Normal (Higher) Vibration Sensitivity (0)

*Low Vibration Sensitivity (1)

Very Low Vibration Sensitivity (2)

Ultra Low Vibration Sensitivity (3)

Third-Party Scale Weight Guard Beam Break Pin Polarity

Parameter # 2499 (SSI # F8h 09h C3h)

This parameter controls the polarity of the 3rd Party Scale Weight Guard beam break signal.

The default value is 0

- 0 - The beam break signal is set to 0 (Low) indicating a beam break event. The beam break signal is set to 1 (High) indicating there is no beam break event at the moment.
- 1 - The beam break signal is set to 1 (High) indicating a beam break event. The beam break signal is set to 0 (Low) indicating there is no beam break event at the moment.

*0 - Low

1 - High

User Interface Indications for Scale

This section defines LED and beeper indications for the scale.

Table 23 Scale Related LED and Beeper Sequences

Scale State	7-segment Diagnostic Display	LED (System)	Beeper Sequence	Scale Zero Button (LED)	Optional Scale Display
Scale disabled	No change	No change	None	OFF	Blank
Scale normal - stable with weight	No change	No change		Solid Green ON	Weight Reading
Under zero	No change	No change	None	Flashing	All “- - - - -” (dashes)
Over range condition (weight is greater than 30.09 lb or 15.045 kg)	No change	No change	None	OFF	EEEEE
Weight unstable	No change	No change	None	OFF	Numerical values blank but measurement unit icons (lb or kg) remain on.
Scale Zero button press	If zero operation fails it scrolls U12	Red (Warning) if zero operation fails on a Scale Zero button press; otherwise, no change	Click sound	No change	If successful weight reads 0 (zero) and <0> indicator icon illuminates.
Scale out of calibration	Scrolls fault code U14	Red (Warning)	None	OFF	Blinks CAL

Table 23 Scale Related LED and Beeper Sequences (Continued)

Scale State	7-segment Diagnostic Display	LED (System)	Beeper Sequence	Scale Zero Button (LED)	Optional Scale Display
Successfully entering scale legal Calibration Mode	Program Legal Parameters and Calibration at NO LOAD Scrolls C00Lb OR C00g depending on units programmed as pounds (lb) or kilograms (kg) Calibration at LOAD - Scrolls C25Lb or C11g depending on units programmed as pounds (lb) or kilograms (kg) Calibration Success or Failure - Repeat scrolls of CALP then CALS Any step - Calibration Fails - Scrolls fault code: u##	No change	Five long beeps	Off	Calibration at NO LOAD Blinks between CAL00 and CAL_ _ with correct unit icon illuminated (lb or kg). Calibration at LOAD Blinks CAL25 with lb icon illuminated, or CAL11 with kg icon illuminated. Calibration Success or Failure - Repeat scrolls of CALP then CALS Blinks between CAL P (PASS) and CAL S (save legal parameter settings). Any step - Calibration fails blinks CAL F.
Between calibration steps	No change	No change	No change	Off	Blinks HOLD while taking a measurement
Performing a calibration step	No change	No change	Single long beep after pressing the Scale Zero button	Off	No change
Failure to place the correct load on the scale at Calibration at LOAD	C25Lb or C11g depending on units programmed	No change	Two long beeps	No change	No change

Table 23 Scale Related LED and Beeper Sequences (Continued)

Scale State	7-segment Diagnostic Display	LED (System)	Beeper Sequence	Scale Zero Button (LED)	Optional Scale Display
Successfully executing and exiting a scale legal calibration	Calibration procedure semantics removed from display	No change	Three short beeps	Solid green on if weight stable after reset of scale	Scale is reset either by pressing the Scale Zero button, scanning the Scale Reset parameter barcode, or powering the unit OFF then ON. The seven segment test runs.
Cold reset of scale	No change	No change	No change except at Calibration Success or Failure - Repeat scrolls of CALP then CALS - when the Scale Zero button is pressed three short beeps sound	No change	Seven segment test runs and displays: • 00.000 all icons illuminated for three seconds • Blank for one second • 99.999 all icons illuminated for three seconds • Blank for one second • Normal display
Audit Tally - Press and hold Scale Zero button for greater than three seconds when not in a Calibration Mode	Repeated scroll: C### then P### then #.##F	No change	None	No change	Blinks between C### and P### and #.##F

Table 23 Scale Related LED and Beeper Sequences (Continued)

Scale State	7-segment Diagnostic Display	LED (System)	Beeper Sequence	Scale Zero Button (LED)	Optional Scale Display
In Bootloader Mode	No change	Slow blinking red Note: Do not turn off the system in this mode.	None	Off	Blinks LDG
Scale Error	Scrolls fault code: u##	Red (Warning)	None	Off	Blinks FAIL or blanks display with unit icon showing lb or kg illuminated. Display can also blink CALF if the system was in a scale legal Calibration Mode.

Weight Guard Configuration

This section describes Weight Guard configuration parameters, initial calibration, calibration health check information, and re-calibration.

Weight Guard is an off-platter condition detection system that, when enabled, uses LED indicators to alert the user. When a pole display is connected, the display flashes while displaying weight information, indicating an off-platter event. When an off-platter event occurs when weight is requested by the POS, a beep and system LED alert occur.

Weight Guard Enable

Parameter # 2427 (SSI # F1h 74h)

This parameter enables and disables the off-platter detection feature of the Weight Guard system.

Enable Weight Guard (1)

*Disable Weight Guard (0)

Weight Guard Calibration

Upon initial unit installation, calibrate the Weight Guard by pressing the Scale Zero button with no weight on the scale. This also performs Scale Zero calibration.

Weight Guard Calibration Health Check

While the Weight Guard feature is enabled, Weight Guard calibration data is continuously checked for system degradation or unclean platters.

Calibration Warning

A Weight Guard calibration warning code is generated when system degradation is not severe. These codes indicate to the user to examine the system or clean the platter. Re-calibration can be performed if the warning persists after system cleaning.

NOTE: The scanner will not display a warning with a third-party scale installed.

The following warning codes appear on the 7-segment display depending on which Weight Guard shows the warning condition. The Weight Guard feature continues to function in this state.

- U34: Weight Guard speaker side warning code
- U37: Weight Guard button side warning code

See General Error and Warning Codes for a complete list of codes.

Calibration Error

A Weight Guard calibration error code is generated when the system degradation is severe. These codes indicate to the user to examine the system/clean the platter. Re-calibration can be performed if the error persists after system cleaning.

NOTE: The scanner will not display a calibration error with a third-party scale installed.

The system LED also blinks red to indicate the severity of the condition. The following warning codes are generated on the 7-segment display depending on which Weight Guard shows the error condition. The off-platter detection feature is disabled while in this state.

- U35: Weight Guard speaker side warning code
- U38: Weight Guard button side warning code

See General Error and Warning Codes for a complete list of codes.

Field Re-calibration

When a Weight Guard calibration warning or error condition persists, press the Scale Zero button to attempt system re-calibration.

NOTE: For configurations featuring a third-party scale, refer to Field Re-Calibration for Third Party Scanners

When calibration fails the following error codes are shown in the 7-segment display, depending on which Weight Guard shows the failure. The system LED also blinks red to indicate the calibration failure. The Weight Guard off-platter detection feature is (or remains) disabled on calibration failure.

- U36: Weight Guard speaker side warning code
- U39: Weight Guard button side warning code

See General Error and Warning Codes for a complete list of codes.

Field Re-calibration For Third Party Scales

Configurations with a third-party scale should be re-calibrated when:

- Platter is installed
- Platter is cleaned
- When the behavior of Weight Guard is inconsistent or incorrect

1. Press and hold **Scale Zero** and **Volume** simultaneously for five seconds until a short beep sounds.
2. Press and release **Scale Zero** and **Volume** again.

   The 7-segment display displays `C00` and 5 long beeps sound.
3. Remove any load from the scale.
4. Touch **Scale Zero**

   If there is a calibration error, it will will display on the 7-segment display. Refer to Re-Calibration Indications for Third Party Scales for information on indications.

The calibration is complete.

Re-calibration Indications for Third Party Scales

The table below shows the indications for re-calibration states when used with a third party scale.

Table 24 Re-calibration Indications With a Third Party Scale

Scale State	7-Segment Diagnostic Display	LED Indicators	Beeper Sequence
Successfully entering “Third-Party Scale Weight Guard Calibration Mode”.	"C00"	No Change	Five long beeps
Under zero	No Change	No Change	Two long beeps
Non-zero weight on the scale	No Change	No Change	Two long Beeps
Weight Guard Field Calibration Failed	"U36" - Speaker-side calibration failed "U39" - Button-side calibration failed	No Change	Long low beep followed by long high beep

Table 24 Re-calibration Indications With a Third Party Scale (Continued)

Scale State	7-Segment Diagnostic Display	LED Indicators	Beeper Sequence
Successfully executing and exiting a Weight Guard Field Calibration	"CAL P" for 10 seconds	No Change	3 short beeps

Cleaning the Weight Guard

Periodically clean the Weight Guard system surfaces to ensure optimal functionality.

Several factors can impact Weight Guard performance after continued use.

- Dirt, scratches, or other substances on the transmit/receive window on either side of the tower
- Dirt or other substances on the platter surface
- Dirt, scratches, or other substances on the retroreflector inlays on either side of the far edge of the platter
- Damaged or peeling retroreflector inlays

Clean the Weight Guard as follows during regular cleaning of the MP7200 scanner, as well as when a Weight Guard warning or error code displays on the 7-segment display.

1. Wipe all Weight Guard surfaces with a damp cloth or Zebra approved cleaning agent. This includes transmit/receive windows, platter surface, and retroreflector inlays.
2. Wait two minutes while the system surfaces dry completely. If the warning or error codes clear, no further action is required.
3. If the warning or error codes persist, attempt a field calibration using the scale **0** button on the touch UI panel. Also perform a field calibration after replacing any parts of the Weight Guard system.
4. If field calibration fails (U39), check all Weight Guard surfaces for damage. A Weight Guard field calibration may compensate for minor damage. More significant damage, such as deep scratches to transmit receive windows, peeling or missing retroreflectors, or hard to remove substances require additional service to restore performance.

NOTE: Wait a minimum of two minutes after cleaning to allow liquid cleaning agents to completely evaporate. Weight Guard function is not reliable when system surfaces are wet or damp.

Weight Guard User Interface Indications

The following table describes all user indications for the Weight Guard.

Table 25 Weight Guard User Interface Indications

Off-Platter Event Scenarios	System Speaker Beep	System LED Indication	Weight Guard LED (Speaker Side)	Weight Guard LED (Button Side)	Pole Display	POS
Weight Guard feature disabled	None	No change	Off	Off	Reports correct weight	Reports correct weight
Weight Guard enabled, no off-platter event	None	No change	Off	Off	Reports correct weight	Reports correct weight
Weight Guard enabled, off-platter event exists on speaker side	3 short high beeps	Blinks red for 3 seconds, then turns green	Blinks 75% duty cycle for 3 seconds, then turns solid red until event is cleared	Off	Flashes while weight read is reported	Weight displays as 0.000 and **Scale Not Ready** message displays in SDK
Weight Guard enabled, off-platter event exists on button side	3 short high beeps	Blinks red for 3 seconds, then turns green	Off	Blinks 75% duty cycle for 3 seconds, then turns solid red until event is cleared	Flashes while weight read is reported	Weight displays as 0.000 and **Scale Not Ready** message displays in SDK
Weight Guard enabled, off-platter event exists on both speaker and button sides	3 short high beeps	Blinks red for 3 seconds, then turns green	Blinks 75% duty cycle for 3 seconds, then turns solid red until event is cleared	Blinks 75% duty cycle for 3 seconds, then turns solid red until event is cleared	Flashes while weight read is reported	Weight displays as 0.000 and **Scale Not Ready** message displays in SDK

See Scale Warning Codes and Weight Guard Warning Codes for a complete list of scale and Weight Guard codes.

Weight Guard User Interface Indications for Third Party Scales

The following table describes all user indications for the Weight Guard with a third-party scale installed.

Table 26 Weight Guard User Indications for Third Party Scales

Off-Platter Event Scenario	Beeper Indication	System LED Indication
Weight Guard feature disabled	None	No change

Table 26 Weight Guard User Indications for Third Party Scales (Continued)

Off-Platter Event Scenario	Beeper Indication	System LED Indication
Weigh Guard feature enabled - no off-platter event	None	Blinks red for 3 seconds followed by green
Weight Guard enabled, off-platter event exists on speaker side	3 short high beeps	Blinks red for 3 seconds followed by green
Weight Guard enabled, off-platter event exists on button side	3 short high beeps	Blinks red for 3 seconds followed by green
Weight Guard enabled, off-platter event exists on both speaker and button sides	3 short high beeps	Blinks red for 3 seconds followed by green

MP72 EDGE

MP72 EDGE is a small Linux-based computer that uses advanced AI software to help improve store checkout systems. The system uses a color camera to identify produce, detect ticket changes, and prevent scanning errors. It is a ready-to-use, smart solution designed to make retail checkouts more efficient and accurate.

Figure 44 MP72 EDGE Module

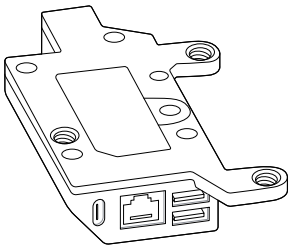

MP72 EDGE Cabling

This section identifies the location of the MP72 EDGE cable ports.

USB Type-C, USB Type-A, and Ethernet Port Locations

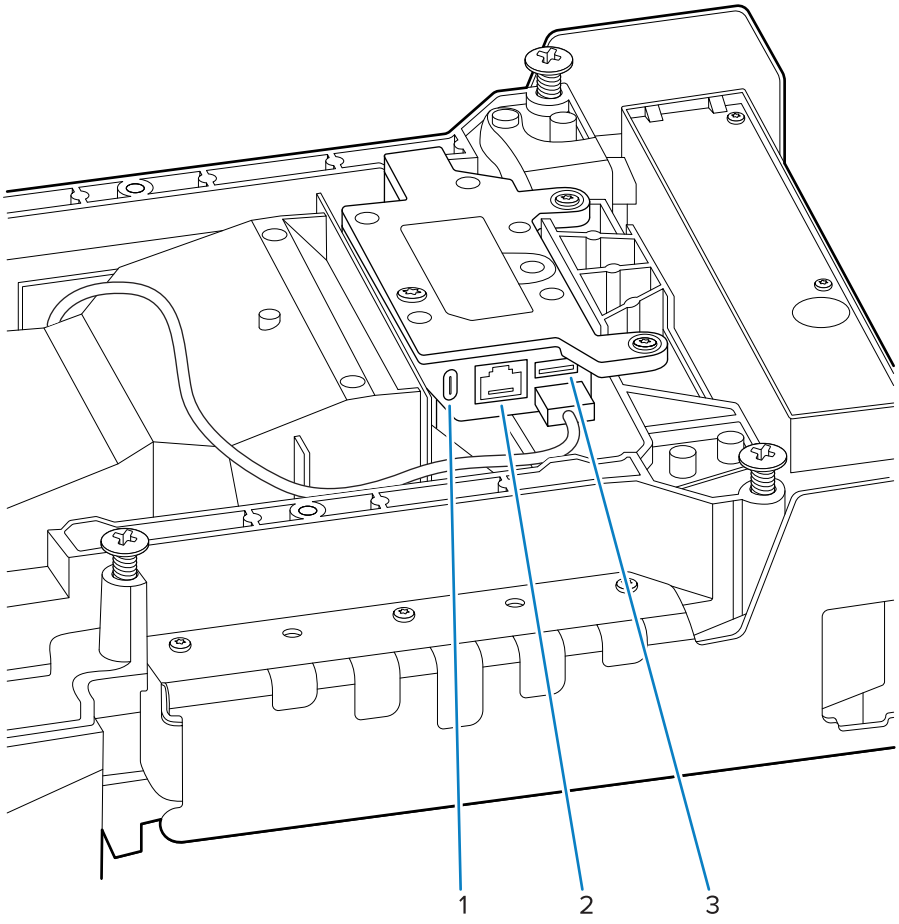

1	USB Type-C Port
2	Ethernet Port
3	USB Type-A Port

NOTE: The USB Type-A port is for service use only.

12V Power Supply Input

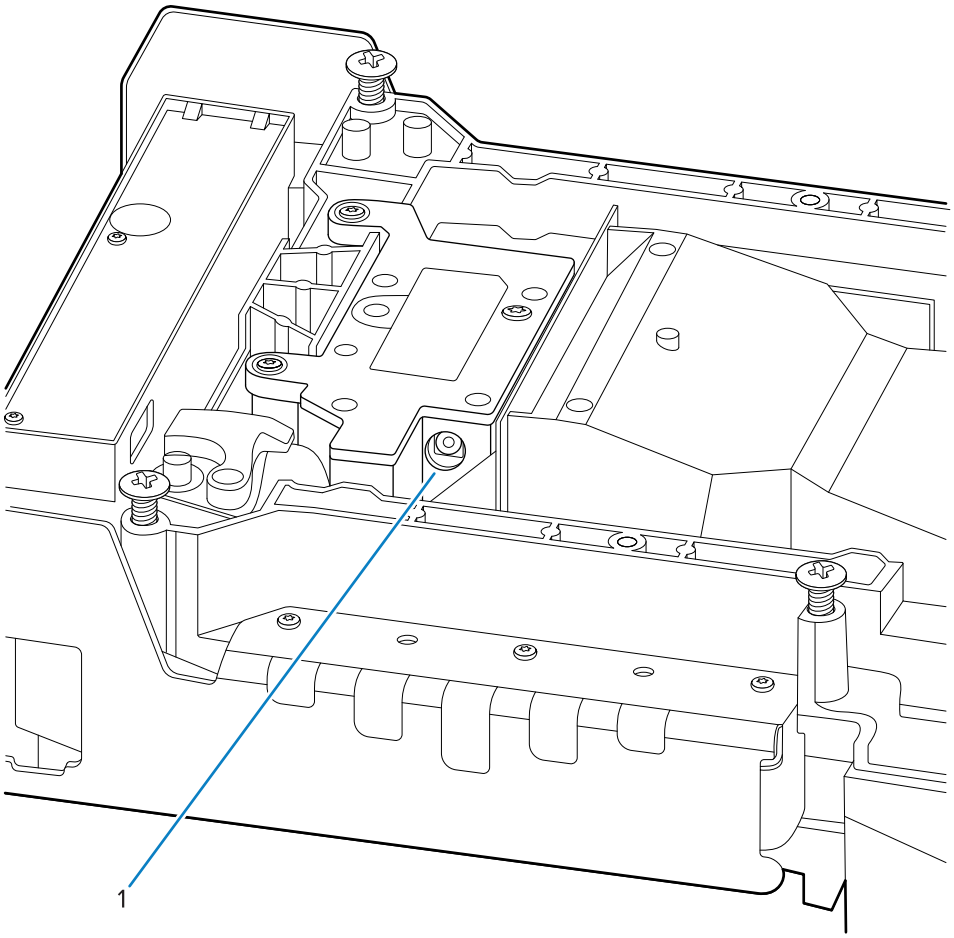

1	12V Power Supply Input

MP72 EDGE Status Light

If the status light on the MP72 EDGE is red after an unsuccessful boot, try rebooting the unit up to a maximum of 20 times to prompt the use of the secondary image to boot up.

Programming

The MP72 can be programmed using the following methods.

Programming Management Tools

This section describes the tools available for programming the MP72.

- 123Scan (see 123Scan and Software Tools for more information).

NOTE: If an MP72 scans a programming 2D barcode generated by 123Scan, it only programs the MP72. An attached CFS and/or auxiliary scanner (for example, the DS8178) must be programmed separately.

- SMS - An SMS package is a file that, when used with the SMS agent, manages a scanner remotely by programming parameters and updating firmware. An SMS package is similar to a zip file and includes three components:
  - 123Scan configuration file containing parameters
  - 123Scan plug-in containing scanner firmware
  - Load Directive file with programming details
- Staging flash drive reprogramming (see USB Staging Flash Drive for more information).

Application Programming Interfaces

This section lists the Application Programming Interfaces (APIs) available for the MP72.

- Zebra Scanner SDK APIs (CoreScanner APIs)

NOTE: SDK-supported functionality by communication protocol is listed in Communication Protocol Functionality.

- Zebra Scanner OPOS/JPOS APIs
- WMI interfaces

For access to APIs, go to: zebra.com/scannersdkforwindows.

Programming Barcodes

With the exception of the host interface and initial scale setup parameters, the MP72 Scanner Scale Barcode Programming Guide includes all the parameter barcodes necessary to configure the device.

USB Staging Flash Drive

This section provides information on using a USB flash drive with the MP72.

NOTE: This feature is only supported with USB 3.0 or above flash drives.

Use a staging USB flash drive to:

- Set up an MP72 system from a 123Scan generated set of files.
- Perform MP72 system cloning.
- Collect MP72 statistics, usage, and diagnostics data.

Create the staging flash drive via 123Scan or an MP72.

- A 123Scan generated flash drive can perform device setups from 123Scan to multiple MP72s.
- An MP72 generated flash drive can perform the following functions:
  - Device cloning from one MP72 to multiple MP72s.
  - Back up system settings from an MP72 (the MP72 parameter settings can be imported into 123Scan)
  - Collect statistics, usage, and diagnostics data (viewable in 123Scan)

MP72 Menu Structure for the USB Staging Flash Drive

This section addresses the various uses for the USB flash drive.

- Option 1 - Copy an MP72[1] configuration to the USB flash drive.
  - Copy parameter settings and firmware from the MP72[1] to the USB flash drive for cloning to another device or viewing in 123Scan.
  - When Option 1 is available, the 7-segment display shows a 1 and one beep sounds.
- Option 2 - Load a USB flash drive configuration to the MP72[1].
  - Load the parameter settings and firmware (if present) from the staging USB flash drive to this MP72[1].

NOTE: The MP72 system configuration settings and firmware are overwritten.

  - When Option 2 is available, the 7-segment display shows a 2 and two beeps sound.
- Option 3 - Copy statistics, usage, and diagnostics data to the USB flash drive.
  - Copy data from the MP72 onto the USB flash drive (the data can be viewed in 123Scan).
  - When Option 3 is available, the 7-segment display shows a 3 and three beeps sound.
- Exit without doing anything - Remove the USB flash drive from the MP72.

[1] Auxiliary device settings are copied/loaded if applicable. Auxiliary scanners are currently not supported.

See Loading Cloning Files for the process steps.

Manually Staging/Configuring MP72 Devices

This section describes how to configure the MP72 using a USB flash drive.

To manually stage/configure MP72 devices using a USB flash drive:

1. Generate the staging files and load them onto a USB flash drive.
2. Deploy the USB flash drive to transport the staging files to an MP72.
3. Load the files and configure the MP72 by inserting the staging flash drive.

   The MP72 has three USB ports which can be used to load files:

   - Two external ports under the device.
   - One internal port accessible by removing the platter. This port faces left and includes a cap which must be replaced when the drive is not in use. If the cap is missing or placed incorrectly, the platter cannot sit properly.

IMPORTANT: See Approved USB Flash Drives for the recommended flash drive dimensions for use in the internal USB port.

Figure 45 Internal USB Port Under Platter

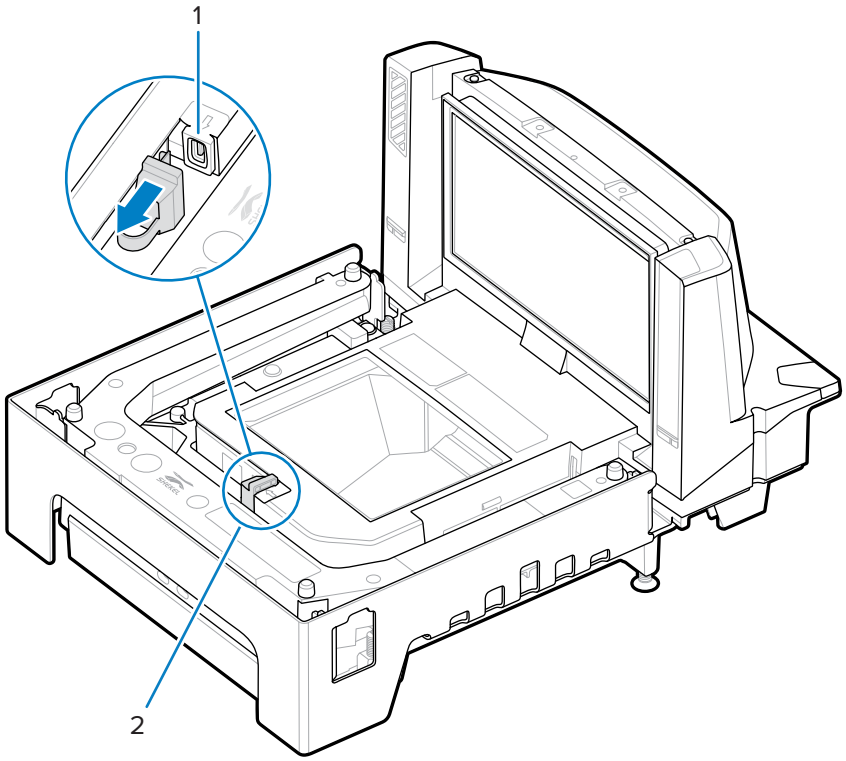

Item	Description
1	Internal USB port cap

Item	Description
2	Staging USB flash drive cap/port

Figure 46 External USB Port

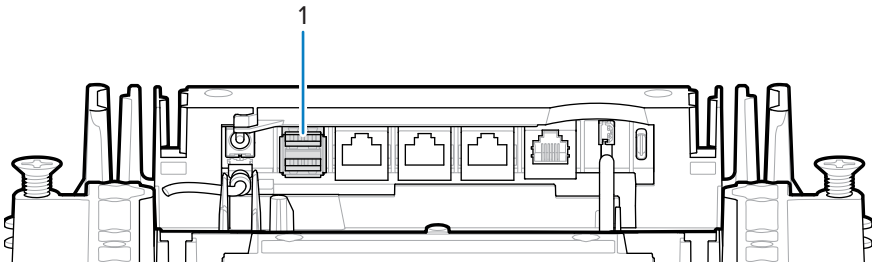

Item	Description
1	External USB port

Loading Cloning Files

Load cloning files to the staging flash drive in one of two ways.

- Insert the flash drive into one of the MP72 USB ports, and select Option 1 - Load Files. See MP72 Menu Structure for the USB Staging Flash Drive.
- Use 123Scan to create and export files to the flash drive. See 123Scan Staging Flash Drive Configuration for more information.

IMPORTANT: See Approved USB Flash Drives for the recommended flash drive dimensions for use in the internal USB port.

NOTE: It is recommended to start with a clean flash drive.

To clone data:

1. Insert the staging flash drive in one of the three MP72 USB ports.

NOTE:

- If EAS is installed and operational, the EAS button remains lit. If EAS is not installed and/or not operational, the EAS button on the front panel of the MP72 lights when the staging flash drive is inserted.
- While the staging flash drive is inserted:
  - Do not remove power.
  - Do not remove or connect any cables.
  - Do not press the Volume or Scale buttons.

  These actions may interfere with the staging flash drive process.

  If the staging flash drive is inserted correctly, the MP72 sounds two beeps (low/high). The MP72 identifies the data on the drive, and the 7-segment display shows a flash drive menu sequence. The menu displays three number options for approximately five seconds each. See MP72 Menu Structure for the USB Staging Flash Drive for options.

2. When the menu displays the desired option, press the EAS button (see MP72 Scanner Scale Features) within five seconds to select it. One, two, or three beeps sound, depending on the option selected.
3. Press the EAS button again within 15 seconds to confirm the selection, otherwise four fail beeps sound, and the 7-segment display re-scrolls the menu.

   After confirmation, the 7-segment display shows a scrolling bar (-) to indicate the device is working. When the process completes (time varies) three success beeps (high/low/high) or four failure beeps sound, and the scrolling bar stops. Removing the staging flash drive sounds the success or failure beeps again.

NOTE: The scrolling bar stops whether the cloning process succeeds or fails. If the process fails, try again or contact the System Administrator.

Removing the staging flash drive prior to completion causes a failure (four beeps sound), and may result in a partial system change.

123Scan Staging Flash Drive Configuration

The 123Scan Flash Drive Wizard guides a user through the process of generating a USB staging flash drive with cloning files.

To access the Flash Drive Wizard from any 123Scan screen, select **Tools** > **Staging Flash Drive (MP72 only)** > **Create Staging Flash Drive Files**.

Approved USB Flash Drives

USB flash drives must meet the following specifications to be accessible for removal from the internal MP72 flash drive well.

- Minimum length: 63.5 mm (2.5 in.)
- Maximum thickness: 11 mm (0.43 in.)
- Maximum width: 21 mm (0.82 in.)

NOTE: Alternatively, some USB flash drives include an opening in their rear covers into which a paper clip can be looped to help achieve the minimal length dimension.

123Scan and Software Tools

This section briefly describes the Zebra software tools available for customizing scanner operation.

123Scan

123Scan is a software tool that simplifies scanner setup and more.

Intuitive enough for first-time users, the 123Scan wizard guides users through a streamlined setup process. Settings are saved in a configuration file that can be printed as a single programming barcode for scanning, emailed to a smartphone for scanning from its screen or downloaded to the scanner using a USB cable.

Through 123Scan, a user can:

- Configure a scanner using a wizard.
  - Program the following scanner settings.
    - Beeper tone/volume settings.
    - Enable/disable symbologies.
    - Communication settings.
  - Modify data before transmission to a host using:
    - Advanced Data Formatting (ADF) - Scan one barcode per decode initiation.
    - Multicode Data Formatting (MDF) - Scan many barcodes in one decode initiation (select scanners).
    - Preferred Symbol - Single out one barcode on label of many (select scanners).
- Load parameter settings to a scanner via the following.
  - Barcode scanning.
    - Scan a paper barcode.
    - Scan a barcode from a smart phone screen.
  - Download over a USB cable.
    - Load settings to one scanner.
    - Stage up to 5 scanners simultaneously (Powered USB Hub recommended with 0.5 amp / port).

- Validate scanner setup.
  - View scanned data within the utility's Data view screen.
  - Capture an image and save to a PC within the utility's Data view screen.
  - Review settings using the Parameter Report.
  - Clone settings from an already deployed scanner from the Start screen.
- Upgrade scanner firmware.
  - Load settings to one scanner.
  - Stage up to 5 scanners simultaneously (Powered USB Hub recommended with 0.5 amp / port).
- View statistics such as:
  - Asset tracking information.
  - Time and usage information.
  - Barcodes scanned by symbology.
- Generate the following reports.
  - Barcode Report - Programming barcode, included parameter settings, and supported scanner models.
  - Parameter Report - Parameters programmed within a configuration file.
  - Inventory Report - Scanner asset tracking information.
  - Validation Report - Scanned data from the Data view.
  - Statistics Report - All statistics retrieved from the scanner.

For more information go to: zebra.com/123Scan.

Communication with 123Scan

Use a USB cable to connect the scanner to a Windows host computer running 123Scan.

123Scan Requirements

- Host computer running Windows 7, 8, 10, or 11.
- Scanner
- USB cable

123Scan Information

For more information on 123Scan, go to: zebra.com/123Scan.

For a 1 minute tour of 123Scan, go to: zebra.com/ScannerHowToVideos.

To see a list of all of our software tools, go to: zebra.com/scannersoftware.

Scanner SDK, Other Software Tools, and Videos

Tackle all your scanner programming needs with our diversified set of software tools. Whether you need to simply stage a device, or develop a fully featured application with image and data capture as well as asset management, these tools help you every step of the way.

To download any of the following free tools, go to: zebra.com/scannersoftware.

- 123Scan configuration utility
- SDKs
  - Scanner SDK for Windows
  - Scanner SDK for Linux
  - Color Camera SDK for Windows and Linux
- Drivers
  - OPOS driver
  - JPOS driver
  - USB CDC driver
  - TWAIN driver
  - Virtual COM port driver
- Scanner Management Service (SMS) for Remote Management
  - Windows
  - Linux
  - IBM 4690
- How-To-Videos
- User documentation

NOTE: For a list of SDK supported scanner functionality by communication protocol, see Communication Protocol Functionality.

Operating the Scanner

This section describes how to operate the MP72 and includes information about indicators (for example, LED, speaker), user buttons, weighing items, and the 7-segment character (diagnostic) display.

Controls and Indicators

See Speaker and LED Indicators for all speaker and LED indications.

User Feedback Light Indicator

The user feedback light indicator (1) is located on the right side of the device and illuminates green and red visual feedback for system statuses and alerts.

- Green indicates the unit is operating normally.
- Blinking red/green indicates a warning. The unit continues to operate with possible performance degradation.
- Red (solid) indicates a fault. The unit does not operate correctly unless the error is resolved.

See Speaker and LED Indicators for indicator descriptions.

Figure 47 User Feedback Light Indicator Location

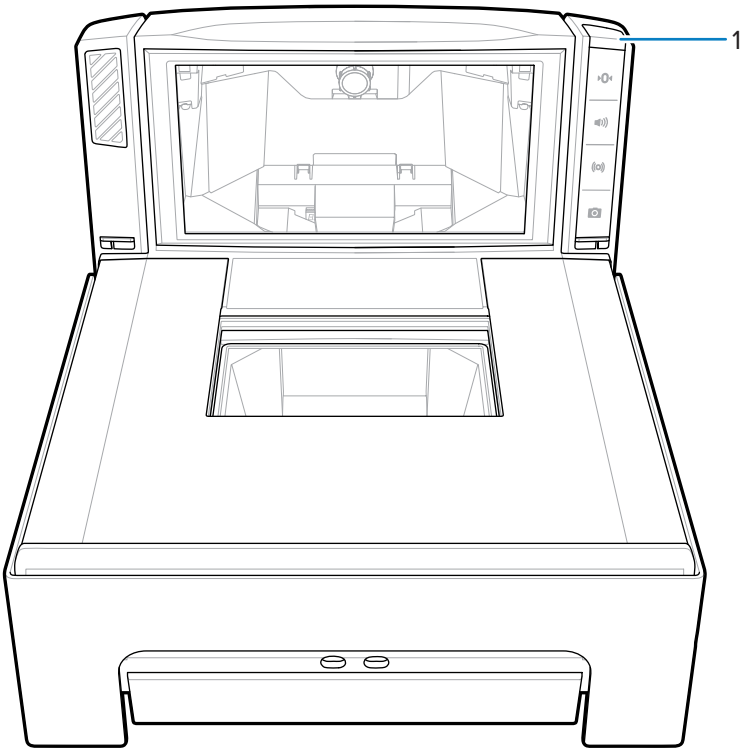

Diagnostic LED/7-segment Display

The internal 7-segment one-character display (1) is visible inside the scanner vertical window. Letter(s) and number(s) scroll one character at a time through the display to provide error and warning codes, scale legal parameters, and guidance during scale calibration. When a message completes, the display pauses for two seconds, then the message repeats continuously.

NOTE: When there are no issues, a dash displays to show the 7-segment display is operational.

- An error or warning message repeats until the issue is resolved.
- A message related to scale calibration repeats until calibration is completed.
- A message related to the CAL/PAR display repeats until the inspector/tester releases the Scale Zero button.

Figure 48 7-segment Diagnostic Display

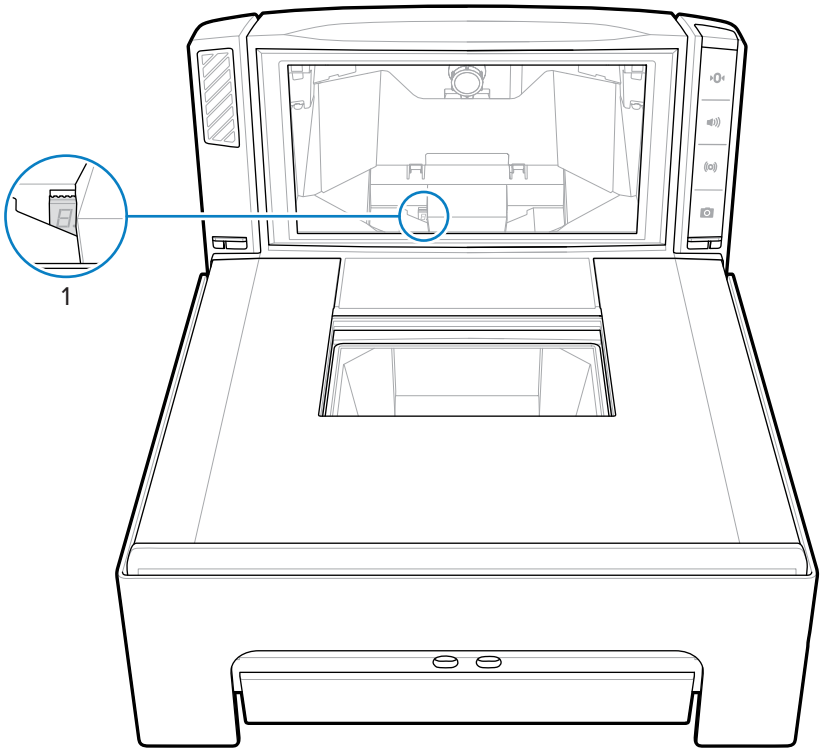

See Maintenance, Troubleshooting, and Error Codes for status and troubleshooting messages.

Front Panel Buttons

The MP72 includes four front panel buttons. Go to Scanner Scale Features for button locations.

Scale Zero Button (Configurations with Scale Only)

The scale zero button controls certain scale operations, and the status LED displays scale status.

Figure 49 Scale Zero Button

Touch Scale Zero to set the scale to zero (within +/- 0.6 lb, or +/- 0.300 kg). The LED is green and can be on, flashing, or off. LED brightness is not programmable. The allowable zeroing weight limit of 0.6 lb and 0.3 kg is configurable. Refer to the Maximum Scale Zeroing Weight Limit parameter in the MP72 Scanner Scale Barcode Programming Guide for more information.

See Speaker and LED Indicators for detailed indications.

Volume/Tone Control Button

This button controls audible system indication settings. The user can set audible feedback for:

- Decoding
- Completion of a request (for example, the successful decode of a barcode, and Sensormatic beep)

- Error conditions
- Processing a request that takes an extended amount of time (for example, scanning a sequence of parameter barcodes) to indicate the scanner is operational and not malfunctioning.

NOTE: If the decode tone is set to off, the Volume/Tone button on the MP72 is not operational. To enable this button, set a tone option other than Off. Refer to the beeper and tone settings in the MP72 Scanner Scale Barcode Programming Guide.

To adjust volume and tone:

- Press and release the Volume/Tone button to sound the current scanner beep volume level.
- Press and release the Volume/Tone button twice within two seconds to change the scanner decode volume.
- Press and hold Volume/Tone for three seconds to change to another tone. Tones cycle.

Each volume or tone change produces a beep when the new setting is complete. Volume and tone wrap from high to low.

See Speaker and LED Indicators table for detailed indications.

Sensormatic Manual Activation and Sensormatic Status Button

This button indicates the state of the Sensormatic EAS device. The LED is yellow/amber and can be on, flashing, or off. See Speaker and LED Indicators table for detailed indications.

Camera Activation Button

This button activates the built-in camera that can be used to take a picture or scan a bank check.

Figure 50 Camera Activation Button

To use this feature, enable the Camera Button (parameter # 1716) and select the interface Symbol Native API (SNAPI) with Imaging Interface. When both of these conditions are met, the Camera Activation LED illuminates. Refer to the MP72 Scanner Scale Barcode Programming Guide to access programmable parameters.

To Capture an Image

Press and release the Camera Activation button. The device sounds a periodic click for 2 seconds while you place the item in position on the horizontal glass closest to the vertical window. After 2 seconds, a camera shutter sounds to capture the image.

Both time duration and camera location are programmable features.

1. Camera Button Delay Time (parameter # 1717) offers delays in increments of 100 ms.
2. Image Capture Camera Selection (parameter # 1715) offers a camera location in the tower (default) or platter.

Soft Reset Buttons

To initiate a soft reset on the MP72 press and hold the Scale Zero and EAS buttons simultaneously for more than 8 seconds. A two-second beep indicates the system reset.

Identifying Firmware Version

To determine the scanner firmware version, hold the EAS button for five seconds. The internal 7-segment display cycles the version numbers one digit at a time.

Operating Modes

The MP72 has two operating modes with the following power requirements:

- Idle Mode 3.0 W (typical)
- Active Mode 5.5 (typical), 6.0 W (maximum)

Scanning

The MP72 uses its horizontal and vertical scan windows simultaneously to read 1D, 2D (for example, PDF, Aztec) and mobile barcodes (cell phone) in all orientations.

The MP72 includes an automatic wakeup system that reduces power consumption. When an object is presented in the field of view of the scan windows, the red illumination turns on and automatically turns off when the object is removed. If the object presented includes a barcode, the MP72 scans the barcode, and if the barcode is successfully decoded, the illumination LED turns off when the object is removed.

Position the barcode anywhere within the MP72's field of view.

Figure 51 Horizontal Scanning with the MP72

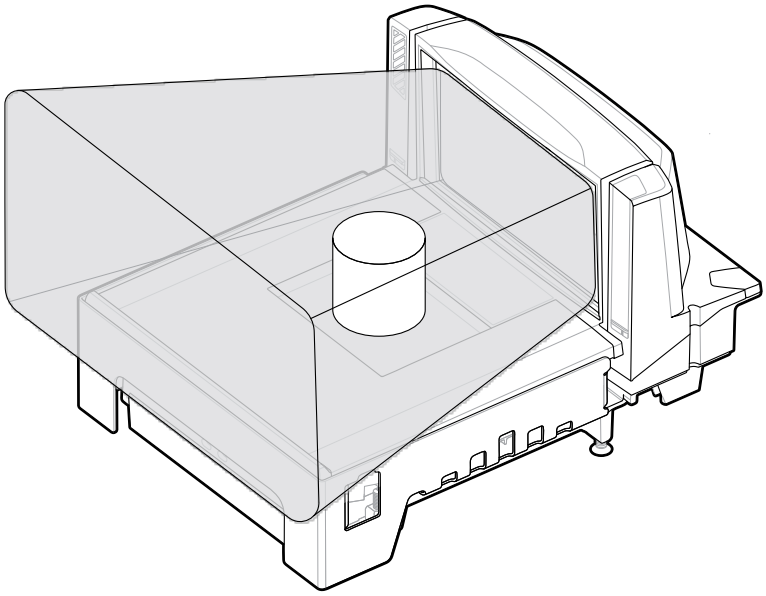

Figure 52 Vertical Scanning with the MP72

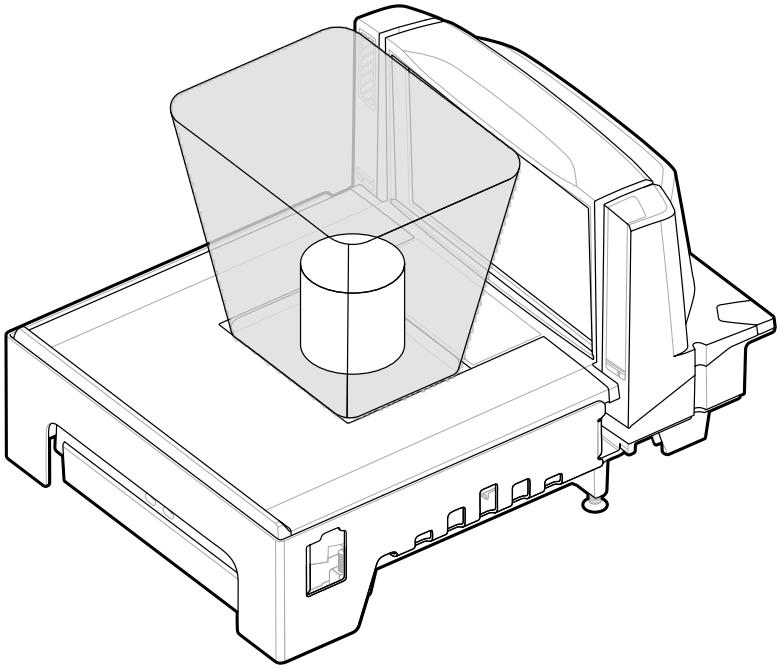

The scanner beeps to indicate a successful decode, and the green LED flashes momentarily (see Speaker and LED Indicators).

Weighing Items

For proper weighing, place items entirely on the scanner's shaded (gray) regions.

Figure 53 Gray Weighing Region

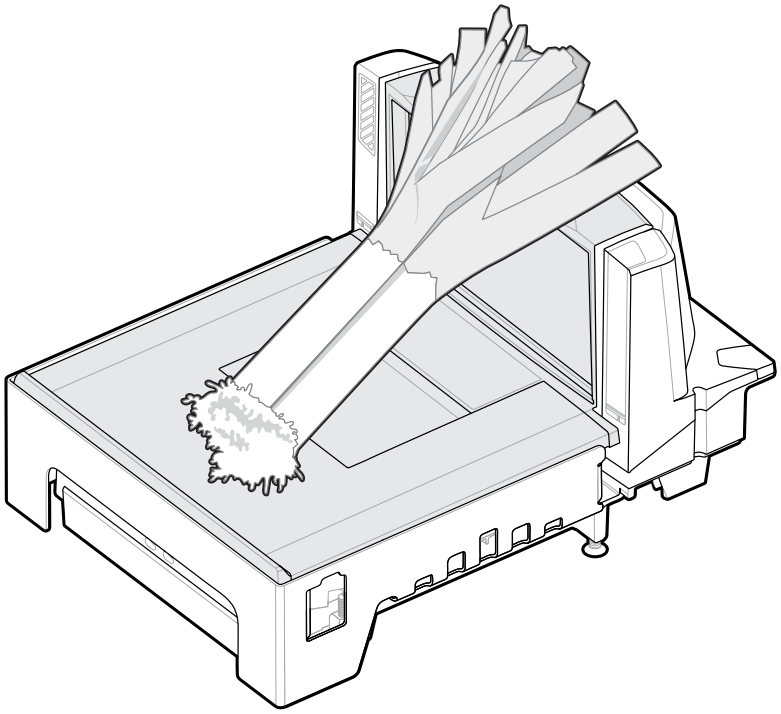

Lay long items on the raised vegetable rail so that the end overhanging the weighing surface is suspended above the countertop.

To weigh an item, ensure all other items are removed from the platter and the platter is in place. Verify the Scale Display shows 0.00 lb (0.000 kg).

NOTE: If the Scale Display does not show 0.00 lb (0.000 kg), clear all items from the platter and zero the scale by touching the Scale Zero button.

If tones are enabled, the MP72 emits a sound to indicate transmission of a stable, non–zero weight.

If weighing does not occur, press CLEAR on the POS and enter the weighed item's PLU number again. If an error code or beep occurs, remove the item, the platter, and any debris underneath. Replace the platter, and press the Scale Zero button to reset the scale. Wait for 0.00 lb (0.000 kg) to display on the Scale Display, and weigh the item again.

NOTE: If an error code displays in the 7-segment display, check LED Display Error and Warning Codes for troubleshooting. If this does not resolve the issue, note the error message and call your service provider or help desk. Go to Front View for the location of the 7-segment display.

Platter

The platter covers the horizontal scan window and scale (if applicable) and accommodates product placement. The sapphire platter glass is built for long-term reliability and clarity and is impervious to scratches except from industrial diamonds.

Removing the Short or Medium Platter

To remove the short or medium platter grasp the top (1) and edge (2) of the platter and lift up.

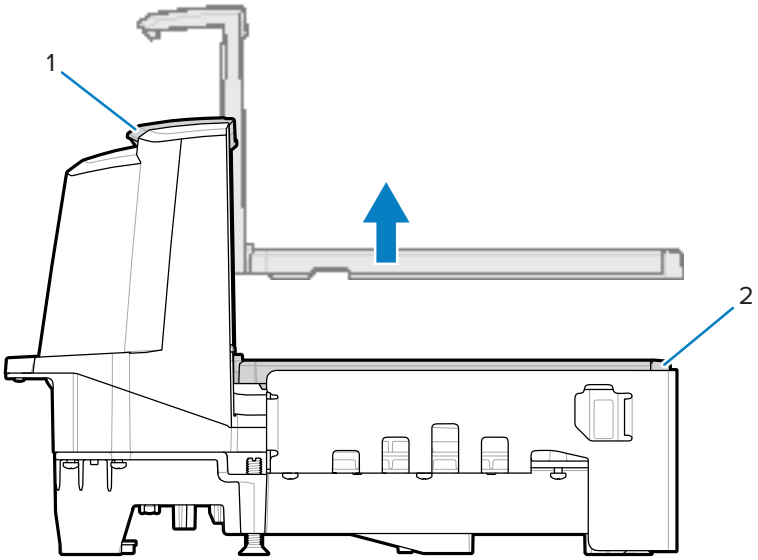

Installing the Short or Medium Platter

To install the short or medium platter, grasp the top and edge of the platter and lower into place until secure.

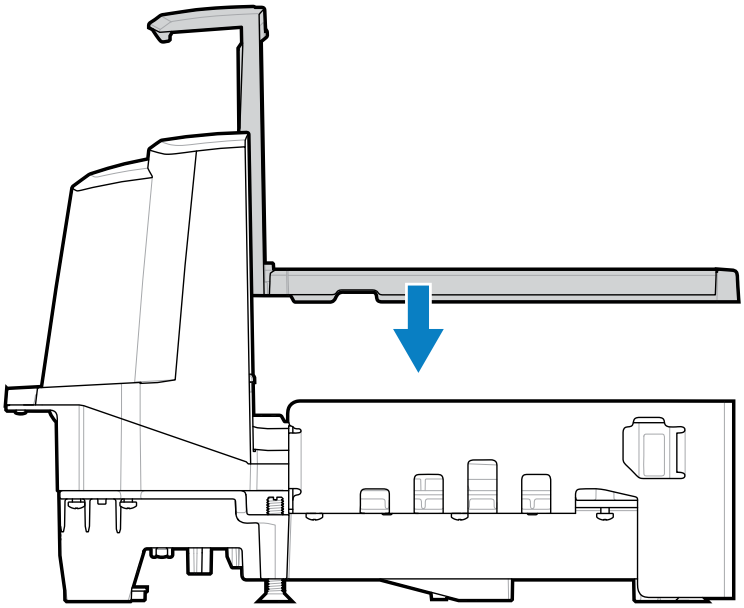

Removing the Long Platter

This section describes how to remove the long platter.

1. Grasp the edge of the platter and lift it up slightly.
2. Holding the edge and top of the platter, pull out and lift off.

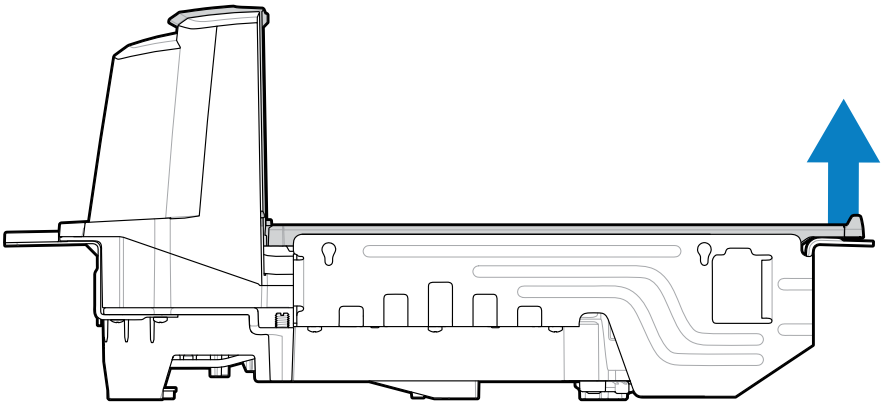

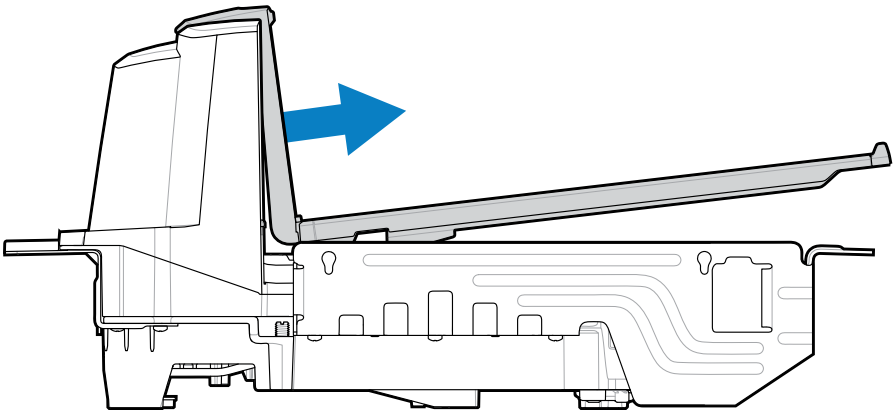

Installing the Long Platter

This section describes how to install the long platter.

1. Grasp the edge and top of the platter and slide the bottom of the vertical scan window into the housing.
2. Lower the edge of platter to sit securely in the device.

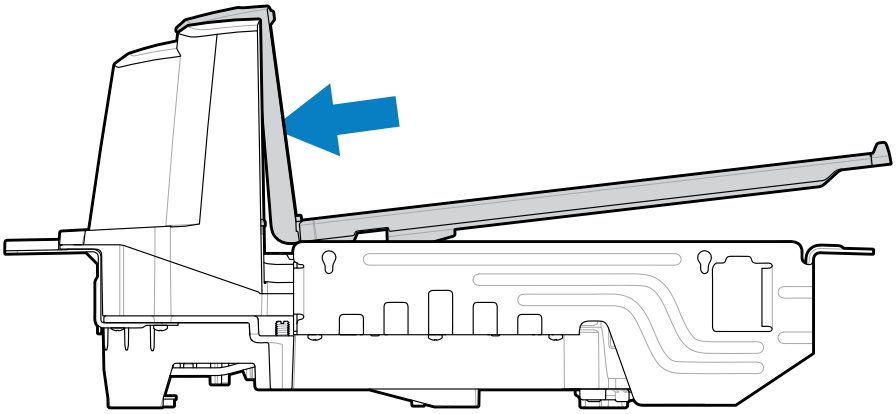

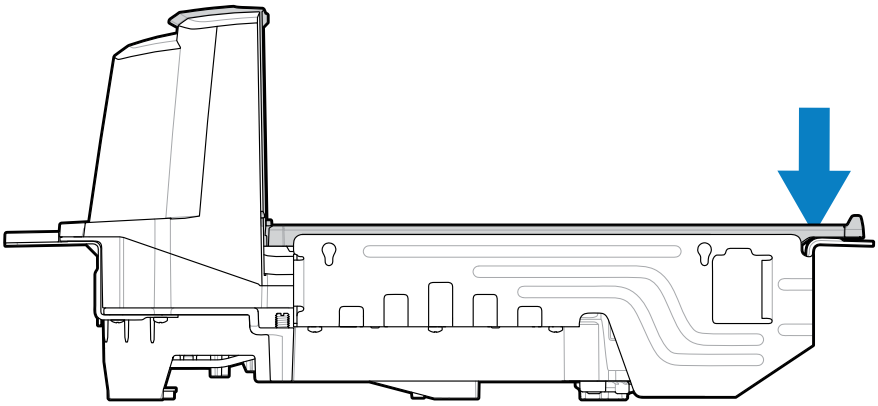

Electronic Article Surveillance (EAS)

The MP72 integrated EAS options support Sensormatic and Checkpoint EAS controllers. The MP72 and EAS system can operate independently of each other or synchronize EAS deactivation with barcode scanning via a communication cable. The deactivation range is mapped suitable to the scanner range, so both can be accomplished almost simultaneously.

Supported EAS Controllers

- Sensormatic
  - Sensormatic AMB-9010
  - Sensormatic AMB-9010-IPS
- Checkpoint
  - Checkpoint Interlocked, requires interlock cable: CB000002A01
  - Checkpoint Non-Interlocked

NOTE: Checkpoint and Sensormatic EAS systems require proper on-site installation by representatives from these companies who install, verify, and tune the system for proper EAS operation.

EAS Operating Modes and Settings

EAS operating modes function when EAS is enabled at the site and are independent of whether EAS equipment is connected. It is the installer's responsibility to match these settings with the installed equipment. Enabling EAS without EAS equipment or with the wrong equipment installed displays an EAS error message. See Speaker and LED Indicators and Diagnostic LED 7-segment Display - Error and Warning Codes for beeper, warning, and error messages. Refer to the MP72 Scanner Scale Barcode Programming Guide for EAS barcodes.

EAS mode is disabled by default. Disable EAS when not using this technology or using Checkpoint without interlock.

There are 10 EAS operating modes and various EAS preferences for the MP72:

- Sensormatic Auto
- Sensormatic Always Enabled
- Sensormatic Barcode Interlock
- Sensormatic Barcode Auto Interlock
- Sensormatic Self Service
- Sensormatic Scan Enable Interlock
- Checkpoint Barcode Interlock
- Checkpoint Scan Enable Interlock
- Checkpoint Non Barcode Interlock
- EAS Disable

For information and parameter barcodes for these modes, refer to the MP72 Scanner Scale Barcode Programming Guide.

Checkpoint Controller

A deactivation antenna mounted under the platter detects and deactivates Checkpoint EAS soft tags (see Installing the Checkpoint Antennas). EAS labels are brought near the antenna for deactivation.

Sensormatic Controller

The Sensormatic controller includes a custom high inductance antenna. The antenna is installed below the platter and is affixed to the housing with clips and screws. See Sensormatic Antenna.

Sensormatic EAS should always be enabled. There is no synchronization with barcode scanning in this mode.

Sensormatic EAS Hard Tags

The detection of hard tags alerts the user with Geiger counter beeps. Environments with a mix of hard and soft tags sound a unique user alert. Go to Speaker and LED Conditions for soft and hard tag beep definitions.

Sensormatic EAS Soft Tags (Labels)

Geiger counter beeps alert the user of soft tag deactivation and soft tag deactivation synchronized with a barcode scan. Use a Sensormatic tag re-setter to disable and reset soft tags.

Speaker and LED Conditions

NOTE: For scale and Weight Guard indications, go to User Interface Indications for Scale and Weight Guard User Interface Indications.

Table 27 Speaker and LED Indicators

Condition	Speaker Indication	System LED Indication	Button LED Indication	Description
Standard Use				
System power-up	Low, Medium, High Beeps	None	No change	Power up.
System reboot	Loud, two seconds beep	No change for 10 seconds. Red for the last two seconds.	No change	After holding the Scale Zero and EAS buttons for 10 seconds, the MP72 reboots.
Barcode decoded	Off, Low, Medium, High, two-tone beep, or TBD tone (programmable)	Bright green	No change	One bright green LED flash.
System is idle	None	Dim green	No change	LED constant on; ready for decode.
System is disabled	None	Off	No change	The host application has sent a SCAN-DISABLE command.
Barcode data transmission error	4 Low Beeps	Red	No change	Transmission error.
Barcode data conversion error	5 Low Beeps	Red	No change	Conversion or format error.
RS-232 host parity error	Low, Low, Low, Extra Low Beeps	Red	No change	RS-232 Receive error.
BELL (RS-232)	High Beep	None	No change	A <BEL> character is received over RS-232
Volume				
Pressed and release Volume/Tone button	Sounds the volume level	No change	Button LED blinks for two seconds (at 2 Hz).	Volume change. It sounds the current volume level. If pressed within two seconds (or while the volume LED is blinking), it sounds the volume at the next level. Once the maximum volume level is reached, it restarts at the lowest volume level.
Press and hold the Volume/Tone button for two seconds	Sounds the decode tone	No change	Button LED blinks for two seconds.	Decode tone change. Subsequence decode tones are heard every second if continuously held. Decode tones cycle.

Table 27 Speaker and LED Indicators (Continued)

Condition	Speaker Indication	System LED Indication	Button LED Indication	Description
Decode tone change (describes action above)	Button click; decode beep at next tone (wrap)	No change	No change	After holding the Volume button for two seconds, the next decode tone sounds. For each additional second, the decode tone changes again.
Button Presses				
Press and release the Scale Zero button	Click	No change	Scale Zero button LED blinks green (momentary)	LED illuminates only if the Scale Zero button is enabled. This causes the scale to zero.
Press and hold the Scale Zero button	Click	No change	None	If the Scale Zero button is enabled, it causes the scale calibration audit trail to display until the button is released.
Press and hold/release the Scale Zero and EAS buttons	Click	Red after 10 seconds upon reboot	No change	After buttons are held for 10 seconds, a system reboot initiates.
Press and hold the Scale Zero and Volume/ Tone buttons for 5 seconds, then release	Short beep after 5 seconds; within 2 seconds of release, press the Scale Zero and Volume/ Tone again and release; 5 long beeps sound	No change	No change	After the final 5 long beeps sound, scale calibration is entered.
Press and release the EAS button	Click	No change	EAS is enabled, LED is amber	If EAS is enabled, button press activates manual tag deactivation.
Camera Activation Button Presses				
Press and release the Camera Activation button	Periodic clicks until shutter sounds indicating a picture was taken.	No Change	No Change	Takes a picture.
EAS/Security Tags				
EAS system disabled	None	No change	EAS LED is off	EAS parameter disabled.
EAS system functional (idle)	None	No change	EAS LED is on	EAS is operating normally.
EAS tag detected anytime	Configurable: None, Geiger Counter clicks	No change	EAS LED blinks yellow at 4 Hz	An EAS tag is in the EAS tag detected area and being detected.

Table 27 Speaker and LED Indicators (Continued)

Condition	Speaker Indication	System LED Indication	Button LED Indication	Description
EAS manual deactivation activated	None	No change	EAS LED is on	When deactivation is active on the system.
EAS Soft Tag Deactivation	None, Beep 1, Beep 2	No change	No change	Beep indicates that a soft tag was deactivated
EAS Hard Tag Detected	None, Beep 1, Beep 2	No change	No change	Beep indicates that a hard tag was detected.
Sensormatic EAS communication disconnect	High, Low Beeps	Green	EAS LED is off	
Sensormatic EAS communication reconnect	Low, High Beeps	Green	EAS LED is on	
Firmware Download				
Firmware Download	Low, Medium, High beep after complete	Red alternating between on and fast blink	No change	Firmware download in progress. Indications identify progress: • Firmware data download in progress: no LED control. • After reboot, firmware is installed: LED blinks fast red. • Download completion: normal power-up beep.
Parameter Programming				
Parameter entry error	Low, High Beeps	Red	No change	Input error: incorrect barcode, programming sequence, or Cancel scanned.
Parameter number entry expected	High, Low Beeps	Green	No change	Number expected. Enter value using numeric barcodes.
Parameter entry accepted	High, Low, High, Low Beeps	Green	No change	Successful program exit with change in parameter setting.
Macro PDF				
Macro PDF buffered	2 Low Beeps	No change	No change	MDPF sequence buffered.
Macro PDF file ID error	2 Long Low Beeps	No change	No change	File ID error. A barcode not in the current MPDF sequence was scanned.
Macro PDF buffer out of memory	3 Long Low Beeps	No change	No change	Out of memory. There is not enough buffer space to store the current MPDF symbol.

Table 27 Speaker and LED Indicators (Continued)

Condition	Speaker Indication	System LED Indication	Button LED Indication	Description
Macro PDF bad symbology encountered	4 Long Low Beeps	No change	No change	Bad symbology. Scanned a 1D or 2D barcode in an MPDF sequence, a duplicate MPDF label, a label in an incorrect order, or trying to transmit an empty or illegal MPDF field.
Macro PDF buffer flushed	5 Long Low Beeps	No change	No change	Flushing MPDF buffer.
Macro PDF aborted	Fast Warble Beep	No change	No change	Aborting MPDF sequence.
Macro PDF buffer flushed with no data	Low, High Beeps	Red	No change	Flushing an already empty MPDF buffer.
ADF Programming				
Number expected	High, Low Beeps	Green	No change	Enter another digit. Add leading zeros to the front if necessary.
Alpha character expected	Low, Low Beeps	Green	No change	Enter another alphabetic character or scan the End of Message barcode.
Criteria or action expected	High, High Beeps	Green Blinking	No change	ADF criteria or action is expected. Enter another criterion or action, or scan the Save Rule barcode.
ADF rule saved	High, Low, High, Low Beeps	Green (turns off blinking)	No change	Rule saved. Rule entry mode exited.
Criteria or action cleared	High, Low, Low Beeps	Green	No change	All criteria or actions cleared for current rule, continue entering rule.
Last rule deleted	Low Beep	Green	No change	Delete the last saved rule. The current rule is left intact.
All rules deleted	Low, High, High Beeps	Green	No change	All rules are deleted.
ADF out of memory	Low, High, Low, High Beeps	Red	No change	Out-of-rule memory. Erase some existing rules, then try to save the rule again.
Cancel rule entry	Low, High, Low Beeps	Green (turns off blinking)	No change	Cancel rule entry. Rule entry mode exited because of an error, or the user asked to exit rule entry.
Rule error	Low, High Beeps	Red	No change	Entry error, wrong barcode scanned, or criteria/action list is too long for a rule. Re-enter criterion or action.

Maintenance, Troubleshooting, and Error Codes

This section provides error/warning codes, troubleshooting, and maintenance information.

Maintenance

Clean the housing and glass with a damp cloth and, if necessary, a non-ammonia-based detergent. Do not allow any abrasive material to touch the screen.

Troubleshooting

The following sections provide information and tips for troubleshooting MP72 issues.

See User Feedback Light Indicator for information on LED color indications.

Diagnostic LED 7-segment Display - Error and Warning Codes

IMPORTANT: Information in LED Display Error and Warning Codes and Scale Fault Codes is for reference only. Contact your service provider for error or warning conditions.

The MP72 includes an LED display inside the scanner vertical window that provides status and troubleshooting information, as well as scale legal parameters during calibration (for configurations with a scale).

The LED display scrolls letter(s) and number(s) one character at a time to indicate status, warning, and error information. When a message completes, the display pauses for two seconds and repeats the sequence continuously.

See Scale Calibration (for scale configurations) for detailed calibration information, including errors and warnings.

LED Display Notes

- - (dash) indicates normal operating mode.
- Scale calibration information (see Scale Fault Codes) has precedence over general warning messages but not over errors.
- Scrolling CAL (number of calibrations performed) and PAR (legal parameter) values display for scale verification (electronic seal).
- Cxxx and Pxxx scroll when the Scale Zero button is held for three or more seconds.

- An error message indicates a fault condition. A power cycle is required. Verify that the subsystems and auxiliary devices are operational.
- A warning message indicates a warning condition. The power sequence pauses until the issue is resolved.
- For scale firmware version # 1.04F (for applicable countries):
  - Scrolling CAL (number of calibrations performed) and PAR (legal parameter) values display for scale verification (electronic seal), and scale approved firmware version number if required by country legislation.
  - Holding the Scale Zero button for three or more seconds scrolls Cxxx and Pxxx, followed by x.xx F (determined by country legislation).

Troubleshooting Assistance

If the MP72 displays an LED code preceded by an E, the error must be resolved before the unit becomes operational. For LED display codes preceded with a U, the MP72 continues to operate, although with possible performance degradation.

Under any circumstance, review basic hardware installation and software configuration before contacting a Zebra-approved service provider. It is often possible to restore unit function by performing the following:

1. Remove power from the MP72, POS equipment, and any auxiliary devices (handheld scanners/cradles).
2. Inspect external cables, including POS, auxiliary handheld devices, and optional pole displays (scale units only) for proper seating in their respective connectors.
3. For units with the optional CFS, ensure the USB cable is properly routed and fully inserted into the USB port.
4. Remove any objects from the platter or near the unit and re-apply power to the MP72 and attached equipment (POS, handheld scanner).
5. Wait for the unit to boot, and listen for start-up audio indicators.
6. If the LED display codes persist contact your Zebra qualified Service Provider.

General Error and Warning Codes

This section describes error and warning codes shown on the 7-segment display.

Table 28 LED 7-Segment Display Error and Warning Codes

LED Display Code	Error/Warning Indication
Errors (E)	
E28	Digital Audio Playback failure
Warnings (U)	
U9	Image Sensor Warning (either)
U16	Sensormatic EAS Offline warning
U17	Host Protocol warning
U27	User Interface (button interface) failure
U31	The Sensormatic control box has an internal high voltage fault. Turn off the control box (EAS tags will not be detected or deactivated).

Scale Warning Codes

The following warning codes appear in the 7-segment display.

Table 29 Scale Warning Codes

Warning Code	Warning Type	Description
U12	Scale Failed to Zero on Scale Zero Button Press	The scale failed to find a zero-weight reference when the Scale Zero button was pressed. The scale zeros if the weight on the platter is within +/- 2% of maximum weight measurement capacity and stable (no motion on the platter). The zeroing weight limit (0.6 lb / 0.3 kg by default) is configurable via the Maximum Scale Zeroing Weight Limit parameter in the MP72 Scanner Scale Barcode Programming Guide. If the operation fails, press the Scale Zero button to clear it.

Table 29 Scale Warning Codes (Continued)

Warning Code	Warning Type	Description
U13	Scale Outside of Zero Drift Threshold	The zero reference drifted beyond 80% of the initial zero setting range of -5% to +15% (-0.9 lb to +3.9 lb / -0.4 kg to +1.9 kg) maximum weight measurement capacity, relative to the zero weight reference found at a no-load legal scale calibration. This indicates the scale will soon require re-calibration. It can possibly be cleared by scanning the Scale Reset parameter barcode, re-powering the scale, or leaving the scale on from a cold power start for more than 10 minutes. If this persists, re-calibrate the scale. **NOTE:** This fault code occurs if a weight greater than 4.5 lb or 2.25 kg is left on the weighing surface while the scale starts from a reset or cold power start. Remove the weight to clear this. **NOTE:** The fault code occurs if the scale resets or upon a cold reset of the MP72 system and the platter is not installed. Install the platter to clear this. **NOTE:** Lowering the Initial Zero Setting maximum weight measurement capacity range of +15% (to as low as +2%) using the **Maximum Initial Zero Setting Range** parameter in the MP72 Scanner Scale Barcode Programming Guide also lowers the maximum Zero Drift warning range respectively, and may lead to more frequent nuisance U13 warnings, which can only be cleared by rebooting the MP72 system. If the U13 warning persists, raise the maximum **Maximum Initial Zero Setting Range**. If the U13 warning persists after reboot and this range is set to the default +15%, then it is not a nuisance annunciation and the scale requires re-calibration.

Table 29 Scale Warning Codes (Continued)

Warning Code	Warning Type	Description
U14	Scale is Out of Calibration	The scale must be legally calibrated before it is operational. There are three possible reasons for this warning: • The scale can no longer find a zero weight reference at power up after a weight is removed from the platter during normal operation or when pressing the Scale Zero button. **NOTE:** The scale software does not remove the scale from calibration under these conditions if it was already legally calibrated. This is an obvious condition for troubleshooting. The Scale Display does not show a 0 (zero) reading from power-up or after pressing the Scale Zero button with no load on the platter. • A new scale was installed in the MP72. • A new MP72 shipped from the factory to an installation that requires calibration at the place of scale use.
U15	Scale Offline	An internal error in the MP72 scanner scale. In most cases, a Scale Communication Error U22 is reported before this error.
U22	Scale Communication Error	Communication failed between the MP72 scanner PCB and the scale device for one of three reasons: • Circuitry on the MP72 scanner PCB failed. • The internal cable between the scanner PCB and scale device is faulty. • Internal circuitry on the scale device is faulty.
U23	Scale Display Communication Error	Communication failed between the MP72 PCB and the Scale Display for one of three reasons: • The Scale Display configuration parameter is enabled, and no Scale Display is connected to the MP72 scanner/scale. Refer to the MP72 Scanner Scale Barcode Programming Guide for scale parameters. • Display circuitry on the MP72 PCB failed. • The Scale Display cable between the MP72 PCB and the Scale Display is faulty, or the internal circuitry of the Scale Display is faulty. The Scale Display and cable are a single Line Replaceable Assembly (FRU*). **NOTE:** In most applications, p/n MX201-SR00004ZZWW can be ordered as a replacement.

Table 29 Scale Warning Codes (Continued)

Warning Code	Warning Type	Description
U24	Scale Motion Fault	The scale detects constant motion on the weighing surface for an extended time. This latched fault requires powering off the MP72, fixing the problem, and powering on the MP72. There are one of three reasons for this fault: • The scale was improperly installed or is mechanically bent or damaged where it cannot achieve a stable weight condition. • The scale or the platter is pressed against a fixed object, inhibiting its free motion. • Debris is lodged under one or more of the over-travel stop screws. **NOTE:** If this occurs, the recommendation in most cases is to remove and re-seat the scale. Replace the scale if the condition persists.

Weight Guard Warning Codes

The following warning codes appear in the 7-segment display.

Table 30 Weight Guard Warning Codes

Warning Code	Warning Type	Description
U34	Weight Guard calibration warning (speaker side)	System degradation is not severe. Examine the system and/or clean the platter. Perform re-calibration if the warning persists after system cleaning.
U35	Weight Guard calibration error (speaker side)	Weight Guard (button side) red LED blinks to indicate that system degradation is severe. Examine the system and/ or clean the platter. Perform re-calibration if the error persists after system cleaning. The off-platter detection feature is disabled while in this state.
U36	Field calibration failure (speaker side)	Re-calibration attempt failed upon a zero button press.
U37	Weight Guard calibration warning (button side)	System degradation is not severe. Examine the system and/or clean the platter. Perform re-calibration if the warning persists after system cleaning.
U38	Weight Guard calibration error (button side)	Weight Guard (speaker side) red LED blinks to indicate system degradation is severe. Examine the system and/or clean the platter. Perform re-calibration if the error persists after system cleaning. The off-platter detection feature is disabled while in this state.
U39	Field calibration failure (button side)	Re-calibration attempt failed upon a zero button press.
U40	Communication to Weight Guard failed (speaker side)	Communication to speaker-side Weight Guard failed. Check the cable connection to the side board.
U41	Communication to Weight Guard failed (button side)	Communication to button-side Weight Guard failed. Check the cable connection to the side board.

Technical Specifications

This section provides MP72 technical specifications.

Table 31 MP72 Technical Specifications

Item	Description
Physical Characteristics	
Dimensions	
Platter Option	
Short (no scale available)	Length: 351.0 mm (13.9 in.) Width: 292.0 mm (11.5 in.) Depth: 102.0 mm (4.0 in.) Height above platter: 129.5 mm (5.1 in.) max
Medium scanner and scanner/ scale	Length: 398.0 mm (15.7 in.) Width: 292.0 mm (11.5 in.) Depth: 102.0 mm (4.0 in.) Height above platter: 129.5 mm (5.1 in.) max
Long scanner and scanner/scale	Length: 506.0 mm (20.0 in.) Width: 292.0 mm (11.5 in.) Depth: 102.0 mm (4.0 in.) Height above platter: 129.5 mm (5.1 in.) max

Table 31 MP72 Technical Specifications (Continued)

Item	Description
Weight **NOTE:** Weight includes platter, but not cables or power supply.	Short: 12.1 lb / 5.5 kg Medium (no scale): 5.7 kg (12.6 lb) Medium (with scale): 7.1 kg (15.7 lb) Long (no scale): 6.6 kg (14.6 lb) Long (with scale): 8.0 kg (17.6 lb)
Power	• 12VDC from POS interface cable (USB PowerPlus, RS-232 or RS-485) • Power Supply P/N: PWR-BGA12V50W0WW - 100-240V~, 50/60Hz, 2.4A, 12VDC, 4.16A • Idle Mode 3.0 W (typical) • Active Mode 5.5 (typical), 6.0 W (maximum) Typical Usage Power = 3.5 W, assuming 18% Active, and 82% Idle **NOTE:** MP72 configurations that include color camera enhancements see an additional 170 mW in power consumption due to the white LEDs. Typical Usage Power = 3.7 W. This increase is based on a color camera exposure time of 1 millisecond.
Data Ports	• One shared POS port for USB / RS-232 / IBM RS-485 • Three USB peripheral ports • Two powered RS-232 peripheral ports • Checkpoint interlock port • Scale Display port • Internal scale port

Scale	• 15 kg in 5 g (30 lb in 0.01 lb) increments
	• Maximum static weight: 136 kg (300 lb)
	• Compatible with Mettler price computational scales
	• Options:
	  • Dual-interval Zebra scale
	  • 0-6 kg in 2 g increments and 6-15 kg in 5 g increments
	  • 0-12 lb in 0.005 lb increments and 12-30 lb in 0.01 lb increments
	  • Single-head and dual head remote scale displays
	  • Dual heads rotate fully independently for widest viewing angles on the market

Table 31 MP72 Technical Specifications (Continued)

Item	Description
Horizontal Platter	• Sapphire and DLC coated • Leek bar option for scale models
User Interface	• Soft touch capacitive pads (no buttons to break or wear out, no debris entry) • Large two-color LED (feedback for cashiers and self-checkout) • Beeper (adjustable volume and beep tones) • Four programmable buttons • Camera Snapshot (collecting images for various applications) • Red light indicators for off-the-scale produce (Weight Guard configurations)
Imaging Technology	
Type	CMOS Array Imager
Illumination	Hyper/deep red, controlled by item detection system
Sides Read/Scan Zone	All sides; 720° coverage
1D/2D Symbologies	2 of 5 (Interleaved, Discrete, IATA, Chinese); Bookland EAN; Code 128; Code 39 (standard, full ASCII); Code 93; EAN128; EAN-13; EAN-8; GS1 DataBar (Omnidirectional, Truncated, Stacked); GS1 DataBar Limited; GS1 DataBar Expanded (regular, stacked); JAN 8; JAN-13; MSI/Plessey; UPC-A; UPC-E; UPC-E1; 2-digit Supplementals; 5-digit Supplemental; Codabar; Pharmacode (Code 32)
2D Symbologies	Aztec; Data Matrix; MicroPDF417; MicroQR Code; PDF417; QR Code; GS1 QR; GS1 Data Matrix; Weblink QR; Han Xin
Digimarc	Digimarc barcode
Performance Characteristics	
User Environment	
Operating Temperature	0° to 40° C (32° F to 104° F)
Storage Temperature	-40° C to 70° C (-40° F to 158° F)
Humidity	20% to 95% (non-condensing)
Ambient Light (for scanning)	Artificial Light: 0 - 450 Foot-candles (4,842 LUX) Sunlight: 0 - 8,000 Foot-candles (86,080 LUX)
Environmental Sealing	IP5X
Utilities and Management	
123Scan	Programs scanner parameters, upgrades firmware, displays scanned barcode data, scanning statistics, battery health, asset data and prints reports. zebra.com/123scan

Table 31 MP72 Technical Specifications (Continued)

Item	Description
Symbol Scanner SDK	Generates a fully-featured scanner application, including documentation, drivers, test utilities and sample source code. zebra.com/scannersdkforwindows
Scanner Management Service (SMS)	Remotely manages your Zebra scanner and queries asset information. zebra.com/sms
Loss Prevention	EAS Checkpoint interlock via optional cables Sensormatic Zebra Scale Platter: Integrated horizontal and vertical platter for increased weighing area
Peripherals and Accessories	
Customer Facing Scanner (CFS)	Mounts on either side of the MP72; used for scanning barcodes, coupons, and loyalty cards from customers' mobile phones and paper.
Scale Display	Enables indication of zero status and gross weight indication for both customer and operator.
Scale (Optional)	Single-interval and dual-interval options available.
Checkpoint Interlock Cable Assembly Kit	P/N: MX310-SA00WW antenna
Width Extender (trim piece)	MP72 long configurations only: p/n: MX303-RAIL
Weight Guard	Off-platter detection system. Triggers an alert when a weighed item blocks the signal.
Color Camera	Optional upper or lower Color Camera configuration, connects to USB type C internal port

ASCII Character Sets

NOTE: For the Keyboard Wedge Interface, Code 39 Full ASCII interprets the barcode special character ($ + % /) preceding a Code 39 character and assigns an ASCII character value to the pair. For example, if you enable Code 39 Full ASCII and scan +B, it transmits as b, %J as ?, and %V as @. Scanning ABC%I outputs the keystroke equivalent of ABC >.

Table 32 ASCII Character Set

ASCII Value (Prefix/ Suffix Value)	Full ASCII Code 39 Encode Char	Keystroke	ASCII Character (Applies to RS-232 Only)
1000	%U	CTRL 2	NUL
1001	$A	CTRL A	SOH
1002	$B	CTRL B	STX
1003	$C	CTRL C	ETX
1004	$D	CTRL D	EOT
1005	$E	CTRL E	ENQ
1006	$F	CTRL F	ACK
1007	$G	CTRL G	BELL
1008	$H	CTRL H/BACKSPACE[1]	BCKSPC
1009	$I	CTRL I/HORIZONTAL TAB[1]	HORIZ TAB
1010	$J	CTRL J	LF/NW LN
1011	$K	CTRL K	VT
1012	$L	CTRL L	FF
1013	$M	CTRL M/ENTER[1]	CR/ENTER
1014	$N	CTRL N	SO
1015	$O	CTRL O	SI
1016	$P	CTRL P	DLE
1017	$Q	CTRL Q	DC1/XON
1018	$R	CTRL R	DC2

Table 32 ASCII Character Set (Continued)

ASCII Value (Prefix/ Suffix Value)	Full ASCII Code 39 Encode Char	Keystroke	ASCII Character (Applies to RS-232 Only)
1019	$S	CTRL S	DC3/XOFF
1020	$T	CTRL T	DC4
1021	$U	CTRL U	NAK
1022	$V	CTRL V	SYN
1023	$W	CTRL W	ETB
1024	$X	CTRL X	CAN
1025	$Y	CTRL Y	EM
1026	$Z	CTRL Z	SUB
1027	%A	CTRL [	ESC
1028	%B	CTRL \	FS
1029	%C	CTRL]	GS
1030	%D	CTRL 6	RS
1031	%E	CTRL -	US
1032	Space	Space	Space
1033	/A	!	!
1034	/B	“	"
1035	/C	#	#
1036	/D	$	$
1037	/E	%	%
1038	/F	&	&
1039	/G	‘	‘
1040	/H	(	(
1041	/I	)	)
1042	/J	*	*
1043	/K	+	+
1044	/L	,	,
1045	-	-	-
1046	.	.	.
1047	/o	/	/
1048	0	0	0
1049	1	1	1
1050	2	2	2

Table 32 ASCII Character Set (Continued)

ASCII Value (Prefix/ Suffix Value)	Full ASCII Code 39 Encode Char	Keystroke	ASCII Character (Applies to RS-232 Only)
1051	3	3	3
1052	4	4	4
1053	5	5	5
1054	6	6	6
1055	7	7	7
1056	8	8	8
1057	9	9	9
1058	/Z	:	:
1059	%F	;	;
1060	%G	<	<
1061	%H	=	=
1062	%I	>	>
1063	%J	?	?
1064	%V	@	@
1065	A	A	A
1066	B	B	B
1067	C	C	C
1068	D	D	D
1069	E	E	E
1070	F	F	F
1071	G	G	G
1072	H	H	H
1073	I	I	I
1074	J	J	J
1075	K	K	K
1076	L	L	L
1077	M	M	M
1078	N	N	N
1079	O	O	O
1080	P	P	P
1081	Q	Q	Q
1082	R	R	R

Table 32 ASCII Character Set (Continued)

ASCII Value (Prefix/ Suffix Value)	Full ASCII Code 39 Encode Char	Keystroke	ASCII Character (Applies to RS-232 Only)
1083	S	S	S
1084	T	T	T
1085	U	U	U
1086	V	V	V
1087	W	W	W
1088	X	X	X
1089	Y	Y	Y
1090	Z	Z	Z
1091	%K	[	[
1092	%L	\	\
1093	%M	]	]
1094	%N	^	^
1095	%O	_	_
1096	%W	‘	`
1097	+A	a	a
1098	+B	b	b
1099	+C	c	c
1100	+D	d	d
1101	+E	e	e
1102	+F	f	f
1103	+G	g	g
1104	+H	h	h
1105	+I	i	i
1106	+J	j	j
1107	+K	k	k
1108	+L	l	l
1109	+M	m	m
1110	+N	n	n
1111	+O	o	o
1112	+P	p	p
1113	+Q	q	q
1114	+R	r	r

Table 32 ASCII Character Set (Continued)

ASCII Value (Prefix/ Suffix Value)	Full ASCII Code 39 Encode Char	Keystroke	ASCII Character (Applies to RS-232 Only)
1115	+S	s	s
1116	+T	t	t
1117	+U	u	u
1118	+V	v	v
1119	+W	w	w
1120	+X	x	x
1121	+Y	y	y
1122	+Z	z	z
1123	%P	{	{
1124	%Q	I	I
1125	%R	}	}
1126	%S	~	~
1127			Undefined
7013			ENTER

NOTE: [1]The keystroke in bold transmits only if you enabled Function Key Mapping. Otherwise, the unbold keystroke transmits.

Table 33 ALT Key Character Set

ALT Keys	Keystroke
2064	ALT 2
2065	ALT A
2066	ALT B
2067	ALT C
2068	ALT D
2069	ALT E
2070	ALT F
2071	ALT G
2072	ALT H
2073	ALT I
2074	ALT J
2075	ALT K
2076	ALT L

Table 33 ALT Key Character Set (Continued)

ALT Keys	Keystroke
2077	ALT M
2078	ALT N
2079	ALT O
2080	ALT P
2081	ALT Q
2082	ALT R
2083	ALT S
2084	ALT T
2085	ALT U
2086	ALT V
2087	ALT W
2088	ALT X
2089	ALT Y
2090	ALT Z

Table 34 GUI Key Character Set

GUI Key	Keystroke
3000	Right Control Key
3048	GUI 0
3049	GUI 1
3050	GUI 2
3051	GUI 3
3052	GUI 4
3053	GUI 5
3054	GUI 6
3055	GUI 7
3056	GUI 8
3057	GUI 9
3065	GUI A
3066	GUI B
3067	GUI C
3068	GUI D
3069	GUI E

Table 34 GUI Key Character Set (Continued)

GUI Key	Keystroke
3070	GUI F
3071	GUI G
3072	GUI H
3073	GUI I
3074	GUI J
3075	GUI K
3076	GUI L
3077	GUI M
3078	GUI N
3079	GUI O
3080	GUI P
3081	GUI Q
3082	GUI R
3083	GUI S
3084	GUI T
3085	GUI U
3086	GUI V
3087	GUI W
3088	GUI X
3089	GUI Y
3090	GUI Z

NOTE: GUI Shift Keys - The Apple™ iMac keyboard has an apple key on either side of the space bar. Windows-based systems have a GUI key to the left of the left ALT key, and to the right of the right ALT key.

Table 35 PF Key Character Set

PF Keys	Keystroke
4001	PF 1
4002	PF 2
4003	PF 3
4004	PF 4
4005	PF 5
4006	PF 6
4007	PF 7

Table 35 PF Key Character Set (Continued)

PF Keys	Keystroke
4008	PF 8
4009	PF 9
40010	PF 10
4011	PF 11
4012	PF 12
4013	PF 13
4014	PF 14
4015	PF 15
4016	PF 16

Table 36 F Key Character Set

F Keys	Keystroke
5001	F 1
5002	F 2
5003	F 3
5004	F 4
5005	F 5
5006	F 6
5007	F 7
5008	F 8
5009	F 9
5010	F 10
5011	F 11
5012	F 12
5013	F 13
5014	F 14
5015	F 15
5016	F 16
5017	F 17
5018	F 18
5019	F 19
5020	F 20
5021	F 21

Table 36 F Key Character Set (Continued)

F Keys	Keystroke
5022	F 22
5023	F 23
5024	F 24

Table 37 Numeric Key Character Set

Numeric Keypad	Keystroke
6042	*
6043	+
6044	Undefined
6045	-
6046	.
6047	/
6048	0
6049	1
6050	2
6051	3
6052	4
6053	5
6054	6
6055	7
6056	8
6057	9
6058	Enter
6059	Num Lock

Table 38 Extended Key Character Set

Extended Keypad	Keystroke
7001	Break
7002	Delete
7003	Pg Up
7004	End
7005	Pg Dn
7006	Pause

Table 38 Extended Key Character Set (Continued)

Extended Keypad	Keystroke
7007	Scroll Lock
7008	Backspace
7009	Tab
7010	Print Screen
7011	Insert
7012	Home
7013	Enter
7014	Escape
7015	Up Arrow
7016	Dn Arrow
7017	Left Arrow
7018	Right Arrow

Communication Protocol Functionality

This section provides the list of functionality supported via communication interfaces.

Functionality Supported via Communication (Cable) Interface

The Communication Interface Functionality table lists supported scanner functionality by the communication protocol.

Table 39 Communication Interface Functionality

Communication Interfaces	Functionality			
	Data Transmission	Remote Management	Image and Video Transmission	
USB				
HID Keyboard Emulation	Supported	Not Available	Not Available	
CDC COM Port Emulation	Supported	Not Available	Not Available	
SSI over CDC COM Port Emulation	Supported	Supported	Supported	
IBM Table-top USB	Supported	Supported	Not Available	
IBM Hand-held USB	Supported	Supported	Not Available	
USB OPOS Hand-held	Supported	Supported	Not Available	
Symbol Native API (SNAPI) without Imaging Interface	Supported	Supported	Not Available	
Symbol Native API (SNAPI) with Imaging Interface	Supported	Supported	Supported	
RS-232				
Standard RS-232	Supported	Not Available	Not Available	
ICL RS-232	Supported	Not Available	Not Available	
Fujitsu RS-232	Supported	Not Available	Not Available	
Wincor-Nixdorf RS-232 Mode A	Supported	Not Available	Not Available	
Wincor-Nixdorf RS-232 Mode B	Supported	Not Available	Not Available	
Olivetti ORS4500	Supported	Not Available	Not Available	

Table 39 Communication Interface Functionality (Continued)

Communication Interfaces	Functionality			
	Data Transmission	Remote Management	Image and Video Transmission	
Omron	Supported	Not Available	Not Available	
CUTE	Supported	Not Available	Not Available	
OPOS/JPOS	Supported	Not Available	Not Available	
SSI	Supported	Supported	Supported	
IBM 4690				
Hand-held Scanner Emulation (Port 9B)	Supported	Not Available	Not Available	
Table-top Scanner Emulation (Port 17)	Supported	Supported	Not Available	
Non-IBM Scanner Emulation (Port 5B)	Supported	Supported	Not Available	