Dell Stereo Headset

WH1022

User's Guide



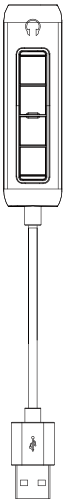

Regulatory Model: HS2201

NOTE: A NOTE indicates important information that helps you make better use of your computer.

CAUTION: A CAUTION indicates potential damage to hardware or loss of data if instructions are not followed.

WARNING: A WARNING indicates a potential for property damage, personal injury, or death.

Copyright © 2021-2025 Dell Inc. or its subsidiaries. All rights reserved. Dell, EMC, and other trademarks are trademarks of Dell Inc. or its subsidiaries. Other trademarks may be trademarks of their respective owners.

2025-01

Rev. A02

Contents

What's in the box 4

Overview 5

Specifications 6

Setting up the headset 7

Headband & microphone boom fit 8

Buttons and indicator light 9

Frequently asked questions 10

Troubleshooting 11

Statutory information 12

Getting help 13

What’s in the box

Dell WH1022 Headset	
Headset controller	
User Documentation (Quick Start Guide, SERI and Warranty Information)	

Overview

Headset

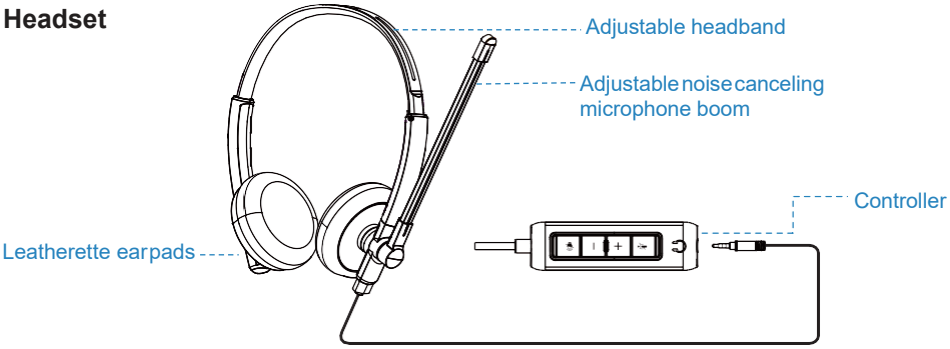

Controller

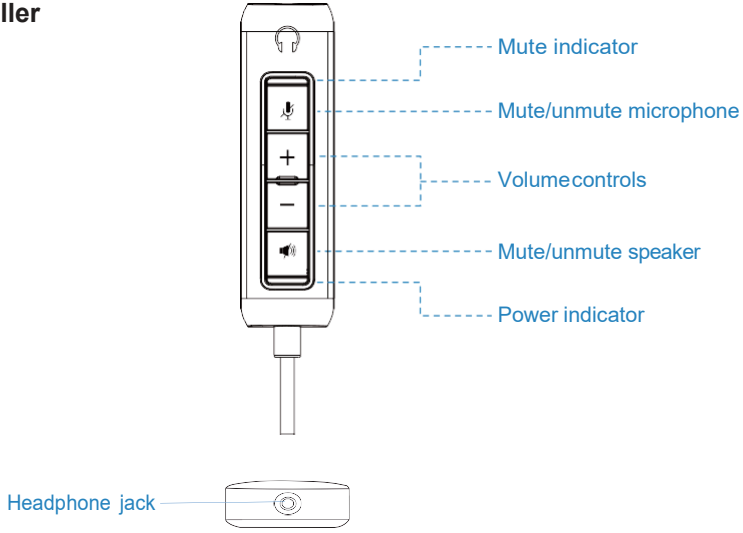

Specifications

Model No.		WH1022
USB-A		USB 2.0
3.5 mm audio jack		CTIA
Height x Width x Depth:	Headset	161.5 mm x 155.2 mm x 59.8 mm
	Ear pads	60 mm x 60 mm x 10 mm
Operating voltage		3.0-5.5 V
System requirements		Windows® 7 or higher
		MacOS® 10.7 or higher
		Linux®
Technical specifications	Input impedance	32 Ohms
	Sensitivity(headphone)	94 dB +/- 3 dB
	Sensitivity(microphone)	-47 dB +/- 3 dB
	Frequency response (headphone)	315 Hz - 20 kHz
	Frequency response (microphone)	100 Hz - 18 kHz

Setting up the headset

1. Connect the headset's audio cable connector to the headphone jack on the headset controller.

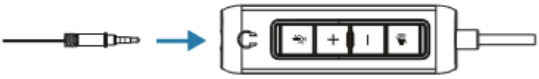

2. Connect the USB-A end of the headset controller cable to a USB-A port on your notebook or desktop.



Note: The headset can be connected to your notebook, desktop or mobile device without the headset controller as well.

Headband & microphone boom fit

Headband fit

Adjust headset by sliding headband open or close.

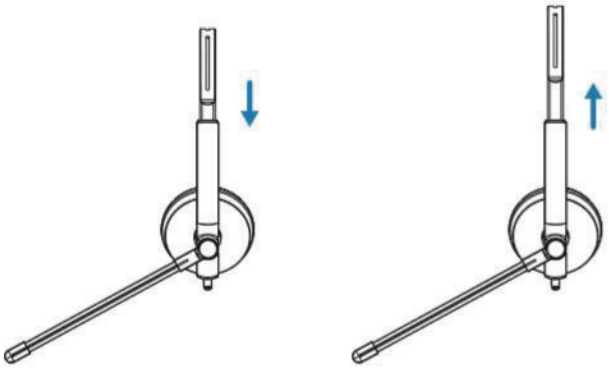

Microphone boom fit

1. Microphone boom rotates 270 degrees. Wear it on either left or right side to capture voice better.

2. Adjust flexible microphone boom location.

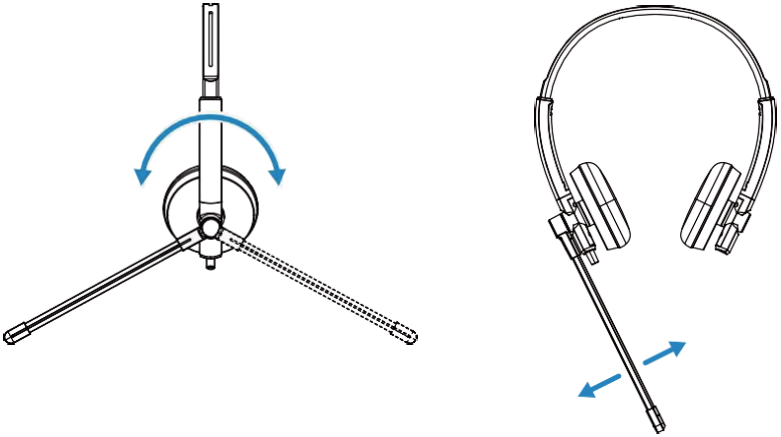

Buttons and indicator light

Button	Usage		Indicator Light	Action
	Mic Mute	Mute On	Solid Red	Short press to Mute On
		Mute Off	No Light	Short press to Mute Off
+	Volume		No Light	Short press to Volume Up
-				Short press to Volume Down
	Speaker Mute	Mute On	No Light	Short press to Mute / Unmute
		Mute Off		
Mic mute off + Speaker mute off			The user can hear the receiver, and the receiver can also hear the user.	
Mic mute on + Speaker mute on			The user cannot hear the receiver, but the receiver cannot hear the user.	
Mic mute off + Speaker mute on			The receiver can hear the user, but the user cannot hear the receiver.	
Mic mute on + Speaker mute off			The user can hear the receiver, but the receiver cannot hear the user.	

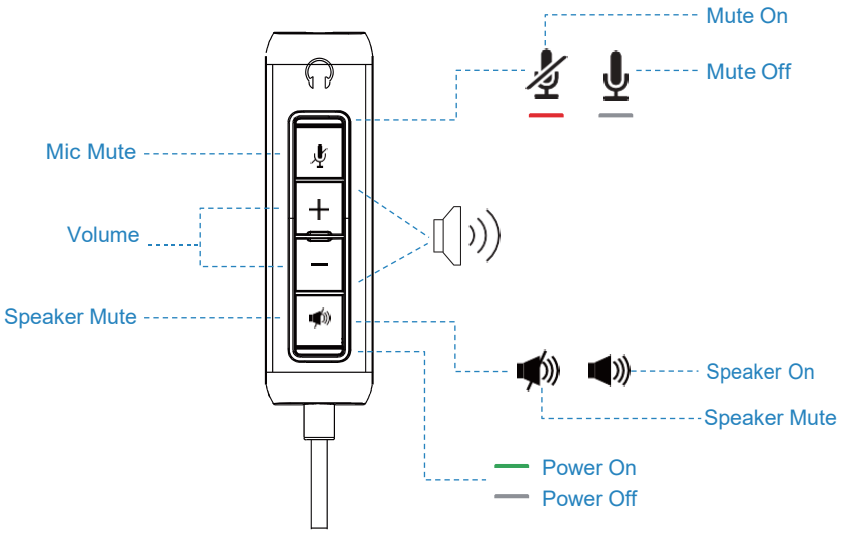

Frequently asked questions

1. What is the recommended configuration to install the Dell WH1022 headset?
Windows 7 64-bit or newer
One USB 2.0 type-A port

2. How do I know if my headset is on?
The Dell WH1022 headset has a status-LED on the controller that stays on (green light) when the headset is in use. The status-LED behavior is as follows:
Headset is on - Status LED is solid green
Headset is off - No light

3. Can I use the Dell WH1022 headset without the controller?
Yes, you can directly plug-in the 3.5 mm audio jack to any device with 3.5 mm port.

4. Can I use the controller with other earphones?
Yes, if your earphones have 3.5 mm audio jack (CTIA), you can plug into the controller and connect it to a computer.

5. How to handle and maximize product shelf life?
Proper Adjustment: When adjusting the size or fit of the headset, do so with care and avoid applying excessive pressure or pulling forcefully on the extender.

Stretch the Headband: If your headphones are new, they might be a bit stiff and exert too much clamping force. Gently stretching (max 260 mm) the headset to help reduce this force. Or when not in use, place the headset on another object that is slightly larger than your head. It can help to gradually reduce the clamping force over time.

Avoid Dropping: Be cautious not to drop the headset. Place the headset on a secure surface when not in use and avoid placing heavy objects on top of it.

Transport Safely: When traveling with the headset, it is recommended to use a protective case or bag. It helps safeguard the headset from impact, scratches, and other potential damage during transportation.

Cable Management: Take care when handling the headset' cables. Avoid bending them excessively or twisting them tightly, as it can strain the connectors and potentially lead to damage. Handle the cables gently and avoid tugging or pulling them forcefully.

Storage: When not in use, store the headset in a clean and dry environment. Keep it away from extreme temperatures, humidity, or direct sunlight, as these conditions can affect its performance and durability.

△ CAUTION: Applying excessive force to extend the headset beyond 260 mm may result in damage or breakage.

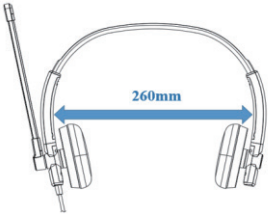

Troubleshooting

Problem	Possible solutions
No audio from headset	**1.** Unplug and re-plug the headset to the computer. **2.** Test on an alternate device if available.
Echo heard from the Mic	**1.** Adjust the volume on your computer or on the host software. **2.** Adjust the mic boom so that it is not too close to your mouth.
Buzzing noise heard on calls	Check the 3.5 mm audio jack by unplug and plug back, if the status remain, try rotate the audio jack.
Unable to hear audio clearly	**1.** Adjust Mic closer to your mouth. **2.** Adjust the microphone volume on the adapter or adjust the microphone type on the selected adapter. **3.** Unplug and re-plug the headset to check again.
Computer speakers playing audio despite having the headset plugged in.	Please check the "Setting>System>Audio>Select Output Device" and select "Dell Stereo Headset".

Statutory information

Warranty

Limited warranty and return policies

Dell WH1022 headset ships with a 3-years limited hardware. If purchased together with a Dell system, it will follow the system warranty.

For U.S. customers:

This purchase and your use of this product are subject to Dell's end user agreement, which you can find at www.dell.com/terms This document contains a binding arbitration clause.

For European, Middle Eastern and African customers:

Dell-branded products that are sold and used are subject to applicable national consumer legal rights, the terms of any retailer sale agreement that you have entered into (which will apply between you and the retailer) and Dell's end user contract terms.

Dell may also provide an additional hardware warranty—full details of the Dell end user contract and warranty terms can be found by going to www.dell.com, selecting your country from the list at the bottom of the "home" page and then clicking the "terms and conditions" link for the end user terms or the "support" link for the warranty terms.

For non-U.S. customers:

Dell-branded products that are sold and used are subject to applicable national consumer legal rights, the terms of any retailer sale agreement that you have entered into (which will apply between you and the retailer) and Dell's warranty terms. Dell may also provide an additional hardware warranty full details of Dell's warranty terms can be found by going to www.dell.com, selecting your country from the list at the bottom of the "home" page and then clicking the "terms and conditions" link or the "support" link for the warranty terms.

Safety Information

 Keep the volume at optimal levels while in use.

Do not listen at high volume levels for a long period. Prolonged exposure to a high volume may cause a high sound pressure and may cause a risk of hearing damage.

Getting help

Contacting Dell

NOTE: If you do not have an active Internet connection, you can find contact information on your purchase invoice, packing slip, bill, or Dell product catalog.

Dell provides several online and telephone-based support and service options. Availability varies by country and product, and some services may not be available in your area. To contact Dell for sales, technical support, or customer service issues:

Steps

1. Go to www.dell.com/support.
2. Select your support category.
3. Verify your country or region in the Choose a Country/Region drop-down list at the bottom of the page.
4. Select the appropriate service or support link based on your need.