ENGLISH Easy Setup Guide
Please read this manual carefully before operating your set and retain it for future reference.

ESPAÑOL Guía Rápida de Configuración
Lea atentamente este manual antes de poner en marcha el equipo y consérvelo para futuras consultas.

FRANÇAIS Guide de configuration rapide
Avant d'utiliser l'appareil, veuillez lire attentivement ce manuel et le conserver pour pouvoir vous y reporter ultérieurement.

OLED TV

55AM960H0UD
65AM960H0UD

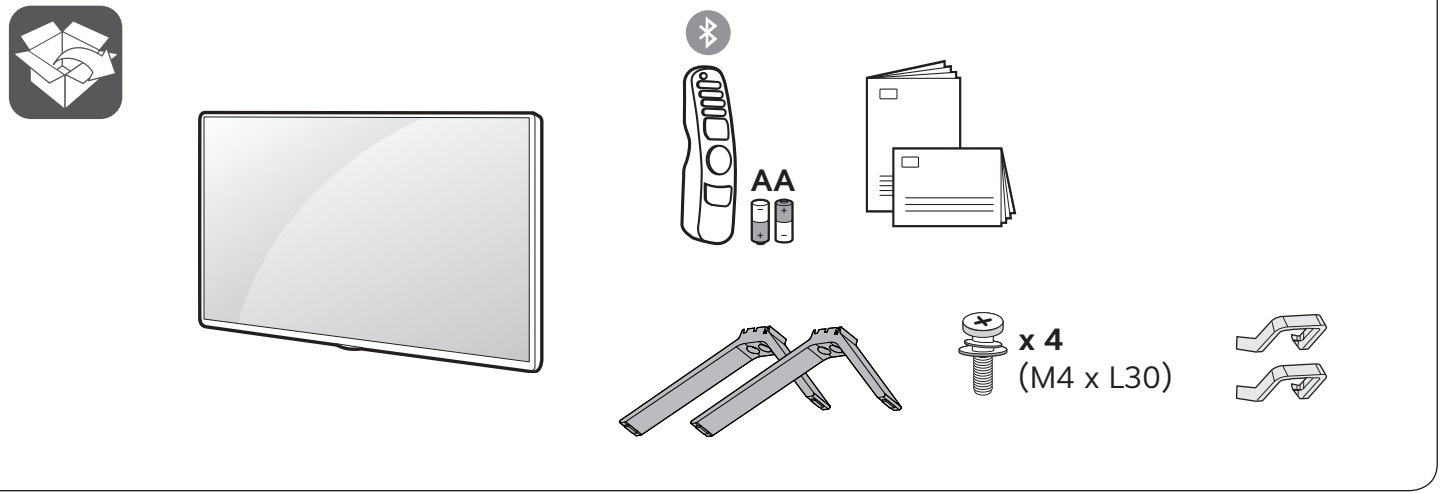

⊕ Depending upon model / Según el modelo / Selon le modèle

www.lg.com

Printed in Korea / Imprimé en Corée

ENGLISH Read **Safety and Reference.**
WARNING : To prevent injury, this apparatus must be securely attached to the desk/wall in accordance with the **Safety and Reference.**

ESPAÑOL Leer **Seguridad y Consultas.**
ADVERTENCIA : Para prevenir daños, este aparato debe ser instalado a la mesa/pared de acuerdo a la guía de **Seguridad y Consultas.**

FRANÇAIS Lisez **Sécurité et références.**
AVERTISSEMENT : Pour éviter les blessures, cet appareil doit être solidement fixé au bureau ou au mur, conformément aux directives du manuel **Sécurité et références.**





1

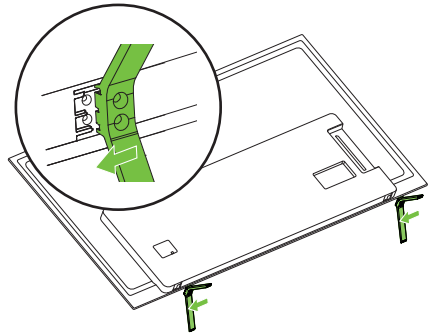

2

x 4



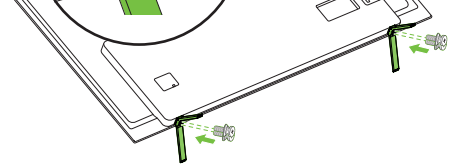

3

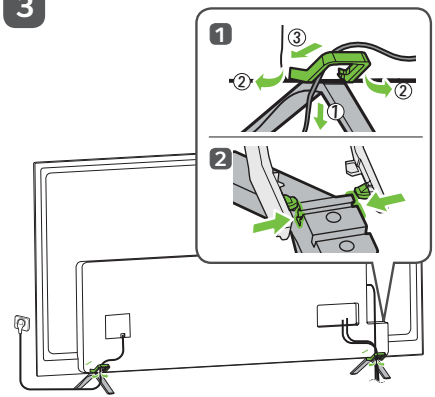

4

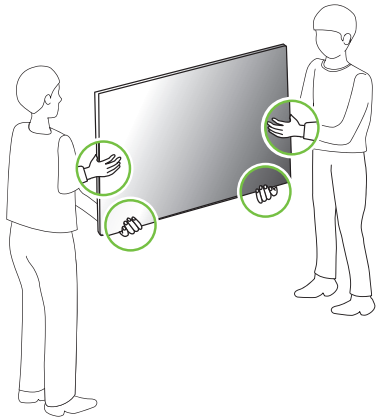

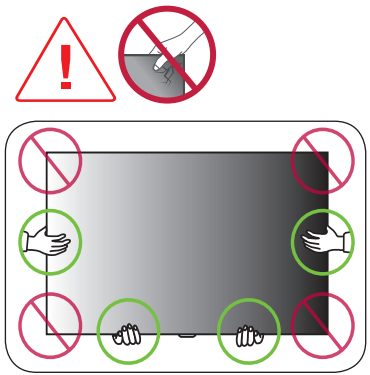

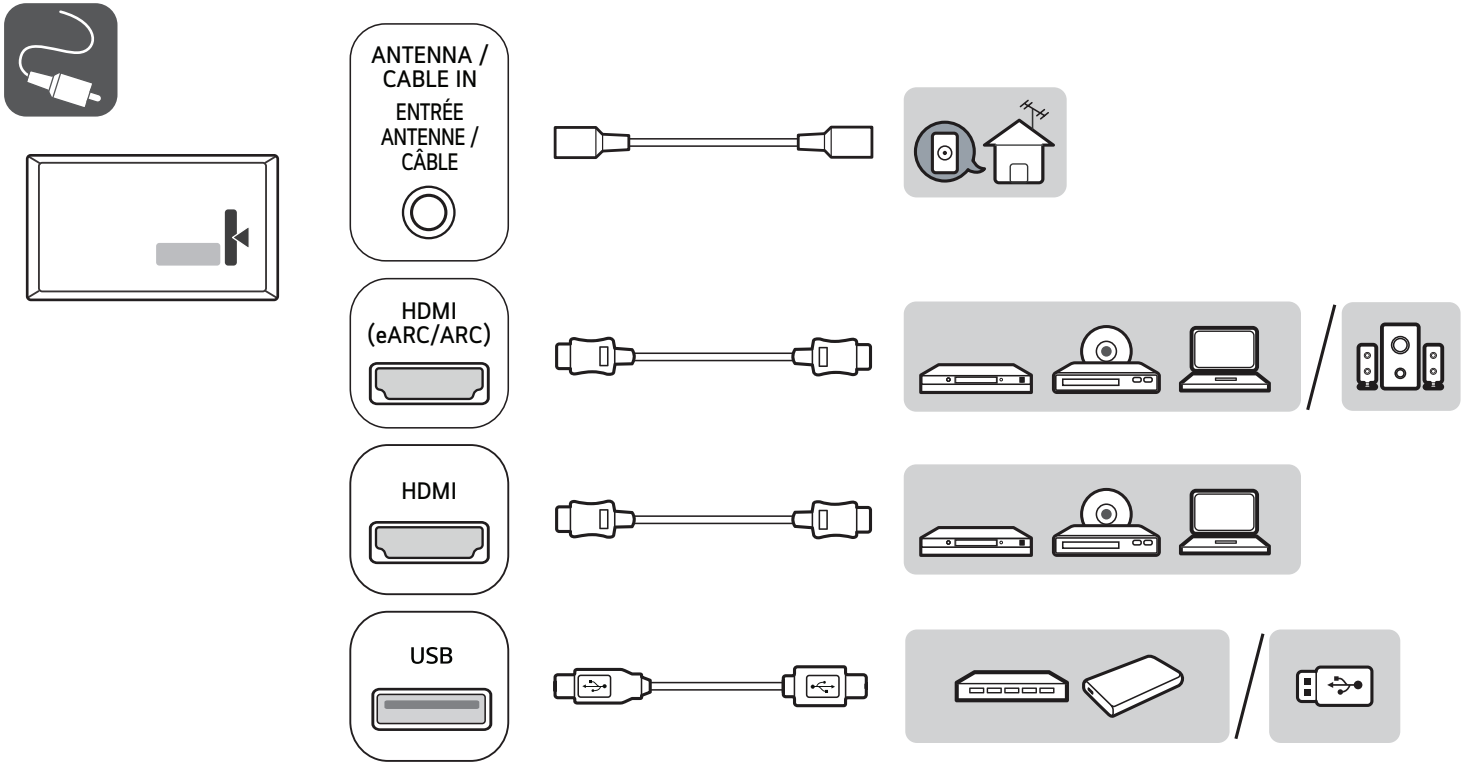
ANTENNA / CABLE IN
ENTRÉE ANTENNE / CÂBLE
HDMI (eARC/ARC)
HDMI
USB

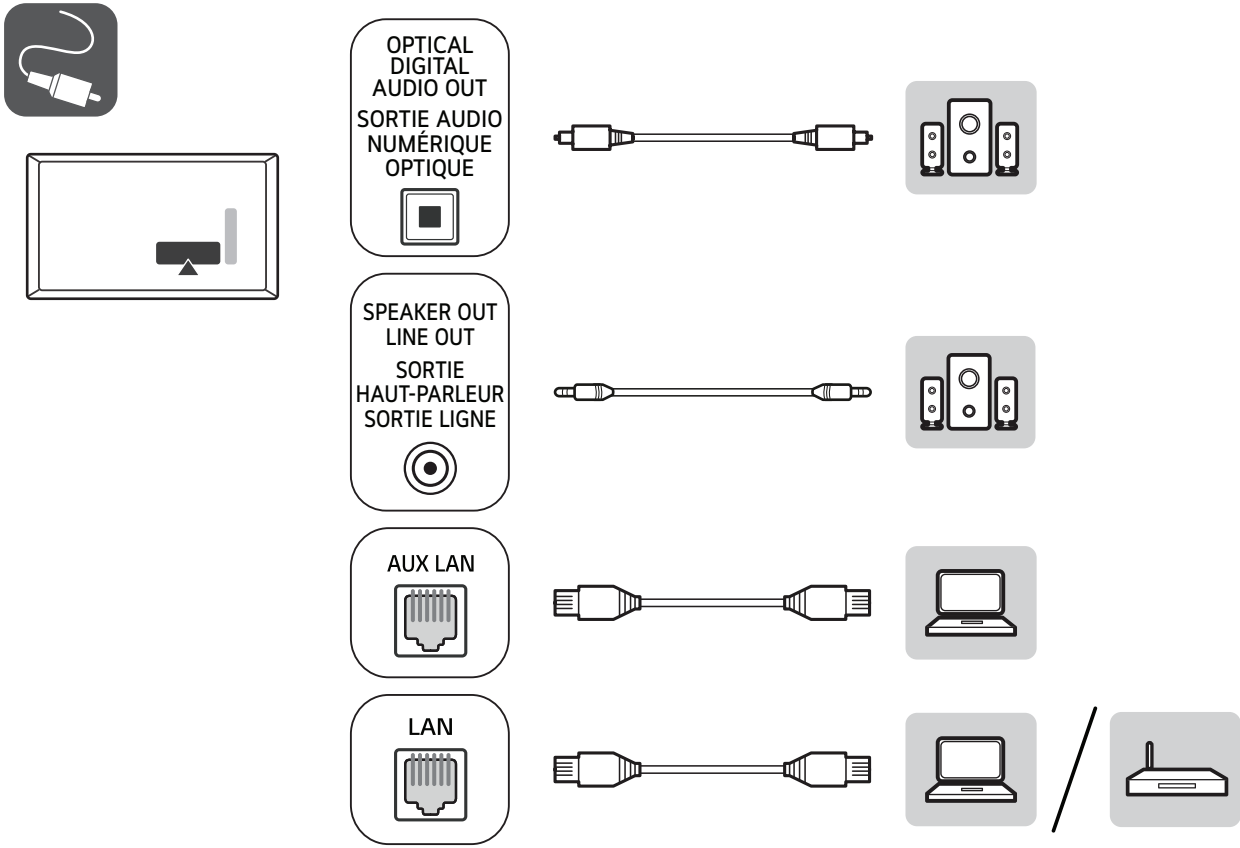
OPTICAL
DIGITAL
AUDIO OUT
SORTIE AUDIO
NUMÉRIQUE
OPTIQUE
SPEAKER OUT
LINE OUT
SORTIE
HAUT-PARLEUR
SORTIE LIGNE
AUX LAN
LAN

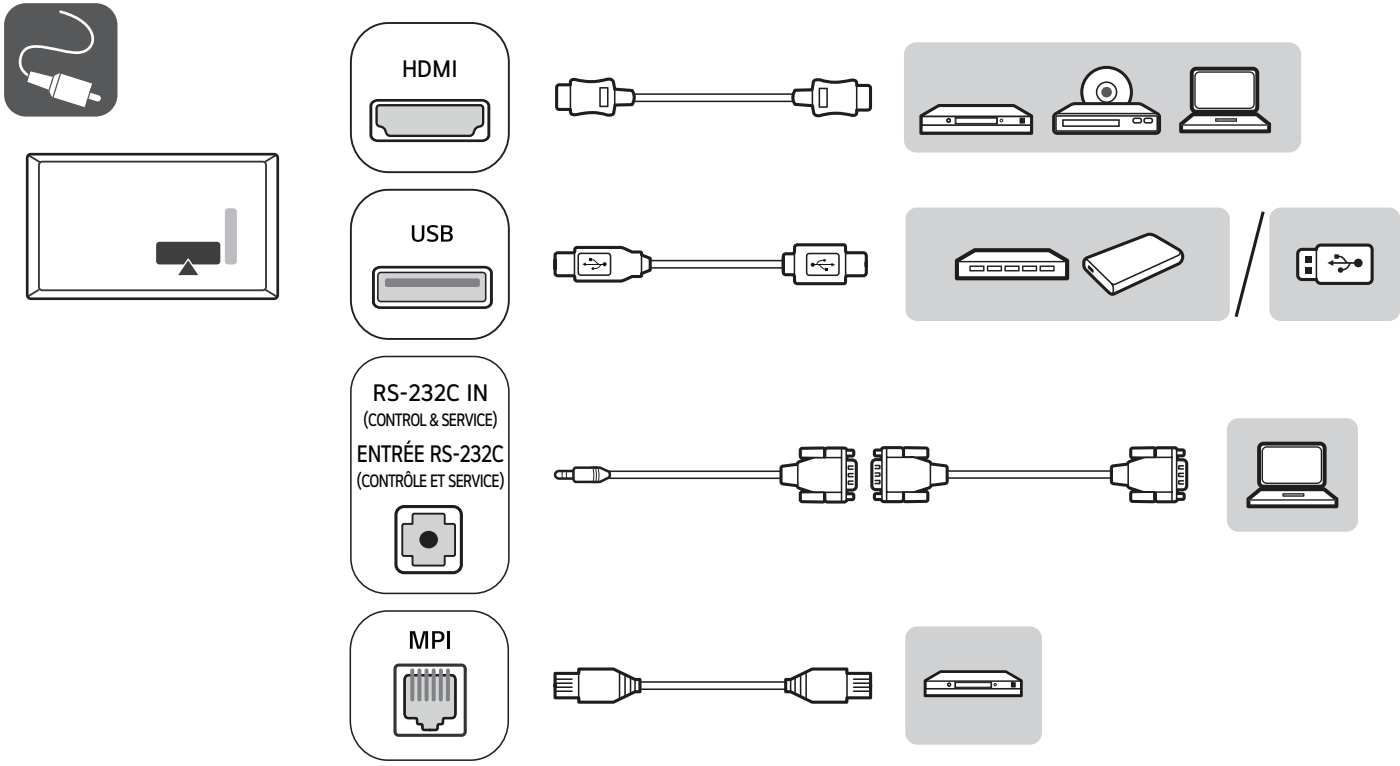
HDMI
USB
RS-232C IN
(CONTROL & SERVICE)
ENTRÉE RS-232C
(CONTRÔLE ET SERVICE)
MPI

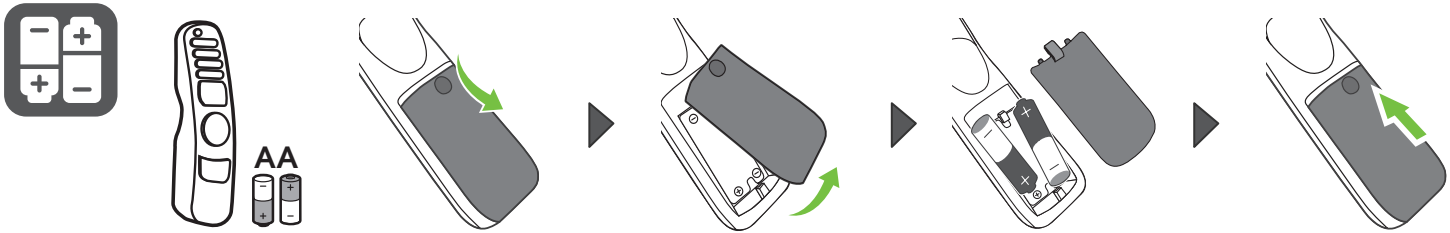
AA

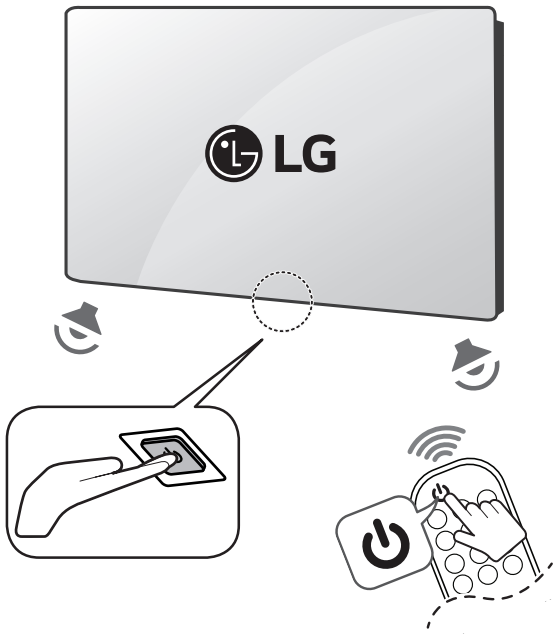
LG

MFL72107002406REV00



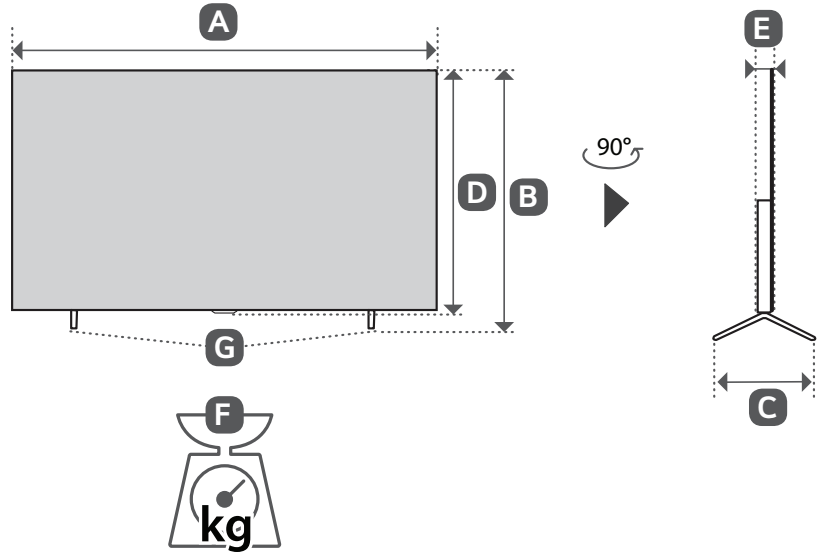

MODELS / MODELOS / MODÈLES	A		B		C		D		E		F		F – G		Power consumption / Consumo de potencia / Consommation électrique
	mm (inches / pulgadas / po)										kg (lbs / libras / lb)				
55AM960H0UD	1,228 (48.3)	1 228 (48,3)	772 (30.3)	772 (30,3)	235 (9.2)	235 (9,2)	708 (27.8)	708 (27,8)	45.9 (1.8)	45,9 (1,8)	14.5 (31.9)	14,5 (31,9)	14.3 (31.5)	14,3 (31,5)	266 W
65AM960H0UD	1,449 (57)	1 449 (57)	896 (35.2)	896 (35,2)	235 (9.2)	235 (9,2)	832 (32.7)	832 (32,7)	45.9 (1.8)	45,9 (1,8)	17.3 (38.1)	17,3 (38,1)	17.1 (37.6)	17,1 (37,6)	347 W
Power requirement / Alimentación requerida / Alimentation électrique											AC 120 V~ 50 / 60 Hz				

OWNER'S MANUAL

Safety and Reference

OLED TV

Please read this manual carefully before operating your set and retain it for future reference.

55AM960H0UD
65AM960H0UD
77AM960H0UD

MFL72107402240 6REV00

www.lg.com

Copyright © 2024 LG Electronics Inc. All Rights Reserved.

Printed in Korea

Table of Contents

Important Safety Instruction

Warning! Safety Instructions

Preparing

Optional Extras
8 Wall Mounting Bracket

Lifting and moving the TV

Mounting on a Table
10 Securing the TV to a Wall

Mounting on a Wall

Connections
12 Antenna/Cable
13 Other connections
14 External Speakers
15 Network setup

Using Button
16 Basic functions

Using Remote Control
18 Registering Magic Remote Control

Troubleshooting

Settings
20 Selecting Picture Mode
20 Adjusting the Brightness of a Picture
20 To use Energy Saving Feature

Specifications
22 HDMI-DTV supported mode
23 HDMI-PC supported Mode
24 Supported Photo Formats
24 Supported Audio Formats
25 Supported Video Formats

Open Source Software Notice Information

Updating Firmware

Licenses

Precautions for Protecting the OLED TV Screen
27 Images that are likely to cause image retention
27 Running [Pixel Cleaning] to Protect the OLED TV Screen
27 Recommendations for Minimizing Image Retention

IR Codes

External Control Device Setup

29 RS-232C Setup
29 Phone jack Type
30 Type of Connector: D-Sub 9-Pin Male
30 RS-232C Configurations
30 Communication Parameters
30 Set ID
31 Command Reference List
32 Transmission / Receiving Protocol

IR OUT Using Guide

40 Suitable / Not Recommend remote-controller data format
40 IR Receiver specifications

Regulatory

41 FCC Notice
41 FCC Radio Frequency Interference Requirements (for UNII devices)
41 FCC RF Radiation Exposure Statement
42 Industry Canada Statement
42 IC Radiation Exposure Statement
42 RSS-247 Requirement
43 NOTE TO CABLE/TV INSTALLER
43 WARNING! (STABILITY HAZARD)
43 Symbols
43 LG Take-back & Recycling Policy
44 Dominican Republic only

Important Safety Instruction

- Read these instructions.
- Keep these instructions.
- Heed all warnings.
- Follow all instructions.
- Do not use this apparatus near water.
- Clean only with dry cloth.
- Do not block any ventilation openings. Install in accordance with the manufacturer's instructions.
- Do not install near any heat sources such as radiators, heat registers, stoves, or other apparatus (including amplifiers) that produce heat.
- Do not defeat the safety purpose of the polarized or grounding-type plug. A polarized plug has two blades with one wider than the other. A grounding type plug has two blades and a third grounding prong. The wide blade or the third prong are provided for your safety. If the provided plug does not fit into your outlet, consult an electrician for replacement of the obsolete outlet.
- Protect the power cord from being walked on or pinched particularly at plugs, convenience receptacles, and the point where they exit from the apparatus.
- Only use attachments/accessories specified by the manufacturer.
- Use only with the cart, stand, tripod, bracket, or table specified by the manufacturer, or sold with the apparatus. When a cart is used, use caution when moving the cart/apparatus combination to avoid injury from tip-over.



- Unplug this apparatus during lightning storms or when unused for long periods of time.
- Refer all servicing to qualified service personnel. Servicing is required when the apparatus has been damaged in any way, such as power-supply cord or plug is damaged, liquid has been spilled or objects have fallen into the apparatus, the apparatus has been exposed to rain or moisture, does not operate normally, or has been dropped.

Warning! Safety Instructions



CAUTION: TO REDUCE THE RISK OF ELECTRIC SHOCK, DO NOT REMOVE COVER (OR BACK). NO USER-SERVICEABLE PARTS INSIDE. REFER TO QUALIFIED SERVICE PERSONNEL.

This symbol is intended to alert the user to the presence of uninsulated "dangerous voltage" within the product's enclosure that may be of sufficient magnitude to constitute a risk of electric shock to persons.

This symbol is intended to alert the user to the presence of important operating and maintenance (servicing) instructions in the literature accompanying this apparatus.

WARNING: TO REDUCE THE RISK OF FIRE AND ELECTRIC SHOCK, DO NOT EXPOSE THIS PRODUCT TO RAIN OR MOISTURE.

- TO PREVENT THE SPREAD OF FIRE, KEEP CANDLES OR OTHER ITEMS WITH OPEN FLAMES AWAY FROM THIS PRODUCT AT ALL TIMES.
- **Do not place the TV and/or remote control in the following environments:**
  - Keep the product away from direct sunlight.
  - An area with high humidity such as a bathroom.
  - Near any heat source such as stoves and other devices that produce heat.
  - Near kitchen counters or humidifiers where they can easily be exposed to steam or oil.
  - An area exposed to rain or wind.
  - Do not expose to dripping or splashing and do not place objects filled with liquids, such as vases, cups, etc. on or over the apparatus (e.g., on shelves above the unit).
  - Near flammable objects such as gasoline or candles, or expose the TV to direct air conditioning.
  - Do not install in excessively dusty places.

  Otherwise, this may result in fire, electric shock, combustion/explosion, malfunction or product deformation.
- **Ventilation**
  - Install your TV where there is proper ventilation. Do not install in a confined space such as a bookcase.
  - Do not install the product on a carpet or cushion.
  - Do not block or cover the product with cloth or other materials while unit is plugged in.
- Take care not to touch the ventilation openings. When watching the TV for a long period, the ventilation openings may become hot.
- Protect the power cord from physical or mechanical abuse, such as being twisted, kinked, pinched, closed in a door, or walked upon. Pay particular attention to plugs, wall outlets, and the point where the cord exits the device.

- Do not move the TV whilst the Power cord is plugged in.
- Do not use a damaged or loosely fitting power cord.
- Be sure to grasp the plug when unplugging the power cord. Do not pull on the power cord to unplug the TV.
- Do not connect too many devices to the same AC power outlet as this could result in fire or electric shock.
- **Disconnecting the Device from the Main Power**
  - The power plug is the disconnecting device. In case of an emergency, the power plug must remain readily accessible.
- Do not let your children climb or cling onto the TV. Otherwise, the TV may fall over, which may cause serious injury.
- **Outdoor Antenna Grounding** (Can differ by country):
  - If an outdoor antenna is installed, follow the precautions below. An outdoor antenna system should not be located in the vicinity of overhead power lines or other electric light or power circuits, or where it can come in contact with such power lines or circuits as death or serious injury can occur. Be sure the antenna system is grounded to provide some protection against voltage surges and built-up static charges Section 810 of the National Electrical Code (NEC) in the U.S.A. provides information with respect to proper grounding of the mast and supporting structure, grounding of the lead-in wire to an antenna discharge unit, size of grounding conductors, location of antenna discharge unit, connection to grounding electrodes and requirements for the grounding electrode. Antenna grounding according to the National Electrical Code, ANSI/NFPA 70
- **Grounding** (Except for devices which are not grounded.)
  - TV with a three-prong grounded AC plug must be connected to a three-prong grounded AC outlet. Ensure that you connect the earth ground wire to prevent possible electric shock.
- Never touch this apparatus or antenna during a lightning storm. You may be electrocuted.
- Make sure the power cord is connected securely to the TV and wall socket if not secured damage to the Plug and socket may occur and in extreme cases a fire may break out.
- Do not insert metallic or inflammable objects into the product. If a foreign object is dropped into the product, unplug the power cord and contact the customer service.
- Do not touch the end of the power cord while it is plugged in. You may be electrocuted.
- **If any of the following occur, unplug the product immediately and contact your local customer service.**
  - The product has been damaged.
  - If water or another substance enters the product (like an AC adapter, power cord, or TV).
  - If you smell smoke or other odors coming from the TV.
  - When lightning storms or when unused for long periods of time.

  Even the TV is turned off by remote control or button, AC power source is connected to the unit if not unplugged in.
- Do not use high voltage electrical equipment near the TV (e.g., a bug zapper). This may result in product malfunction.
- Do not attempt to modify this product in any way without written authorization from LG Electronics. Accidental fire or electric shock can occur. Contact your local customer service for service or repair. Unauthorized modification could void the user's authority to operate this product.
- Use only an authorized attachments / accessories approved by LG Electronics. Otherwise, this may result in fire, electric shock, malfunction, or product damage.
- Never disassemble the AC adapter or power cord. This may result in fire or electric shock.
- Handle the adapter carefully to avoid dropping or striking it. An impact could damage the adapter.

- To reduce the risk of fire or electrical shock, do not touch the TV with wet hands. If the power cord prongs are wet or covered with dust, dry the power plug completely or wipe dust off.
- **Batteries**
  - Store the accessories (battery, etc.) in a safe location out of the reach of children.
  - Do not short circuit, disassemble, or allow the batteries to overheat. Do not dispose of batteries in a fire. Batteries should not be exposed to excessive heat.
  - Caution: Risk of fire or explosion if the battery is replaced by an incorrect type.
- **Moving**
  - When moving, make sure the product is turned off, unplugged, and all cables have been removed. It may take 2 or more people to carry larger TVs. Do not press or put stress on the front panel of the TV. Otherwise, this may result in product damage, fire hazard or injury.
- Keep the packing anti-moisture material or vinyl packing out of the reach of children.
- Do not allow an impact shock, any objects to fall into the product, and do not drop anything onto the screen.
- Do not press strongly upon the panel with a hand or a sharp object such as a nail, pencil, or pen, or make a scratch on it. It may cause damage to screen.
- **Cleaning**
  - When cleaning, unplug the power cord and wipe gently with a soft/dry cloth. Do not spray water or other liquids directly on the TV. Do not clean your TV with chemicals including glass cleaner, any type of air freshener, insecticide, lubricants, wax (car, industrial), abrasive, thinner, benzene, alcohol etc., which can damage the product and/or its panel. Otherwise, this may result in electric shock or product damage.

Preparing

- If the TV is turned on for the first time after it was shipped from the factory, initialization of the TV may take a few minutes.
- Image shown may differ from your TV.
- Your TV's OSD (On Screen Display) may differ slightly from that shown in this manual.
- The available menus and options may differ from the input source or product model that you are using.
- New features may be added to this TV in the future.
- The device must be easily accessed to a location outlet near the access. Some devices are not made by turning on / off button, turning off the device and unplugging the power cord.
- The items supplied with your product may vary depending on the model.
- Product specifications or contents of this manual may be changed without prior notice due to upgrade of product functions.

- For an optimal connection, HDMI cables and USB devices should have bezels less than 10 mm (0.39 inches) thick and 18 mm (0.7 inches) width.
- Use an extension cable that supports USB 2.0 if the USB cable or USB flash drive does not fit into your TV's USB port.
- Use a certified cable with the HDMI logo attached.
- If you do not use a certified HDMI cable, the screen may not display or a connection error may occur.
- Recommended HDMI cable types
  - Ultra High Speed HDMI®/™ cable (3 m (9.84 feet) or less)

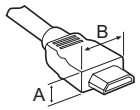

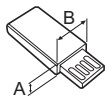

* A ≦ 10 mm (0.39 inches)
* B ≦ 18 mm (0.7 inches)

- Do not use any unapproved items to ensure the safety and lifespan of the product.
- Any damages or injuries by using unapproved items are not covered by the warranty.

Optional Extras

Optional extras can be changed or modified for quality improvement without any notification.
Contact your dealer for buying these items.
These devices work only with certain models.
The model name or design may be changed due to the manufacturer's circumstances or policies.
(Depending upon model)

Wall Mounting Bracket

Make sure to use screws and wall mounts that meet the VESA standard. Standard dimensions for the wall mount kits are described in the following table.

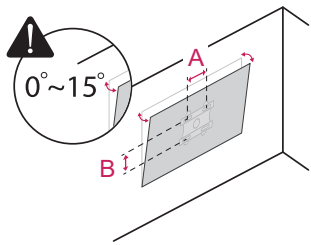

Model	55AM960H0UD 65AM960H0UD 77AM960H0UD
VESA (A x B) (mm)	300 x 200
Standard screw	M6
Number of screws	4
Wall mount bracket	OLW480B

Lifting and moving the TV

Please note the following advice to prevent the TV from being scratched or damaged and for safe transportation regardless of its type and size.

- It is recommended to move the TV in the box or packing material that the TV originally came in.
- Before moving or lifting the TV, disconnect the power cord and all cables.
- When holding the TV, the screen should face away from you to avoid damage.



- Hold the side and bottom of the TV frame firmly. Make sure not to hold the transparent part, speaker, or speaker grill area.

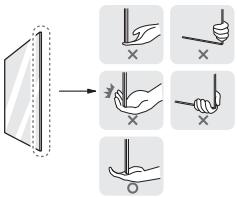

- Use at least two people to move a large TV.
- When transporting the TV by hand, hold the TV as shown in the following illustration.

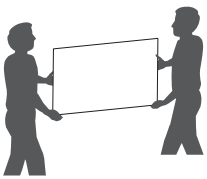

- When transporting the TV, do not expose the TV to jolts or excessive vibration.
- When transporting the TV, keep the TV upright; never turn the TV on its side or tilt towards the left or right.
- When handling the TV, be careful not to damage the protruding buttons.

- Avoid touching the screen at all times, as this may result in damage to the screen.
- Do not place the product on the floor with its front facing down without padding. Failure to do so may result in damage to the screen.
- Do not move the TV by holding the cable holders, as the cable holders may break, and injuries and damage to the TV may occur.
- When attaching the stand to the TV set, place the screen facing down on a cushioned table or flat surface to protect the screen from scratches. (Depending on model)

Mounting on a Table

(Depending upon model)

1 Lift and tilt the TV into its upright position on a table.
- Leave a 10 cm (4 inches) (minimum) space from the wall for proper ventilation.

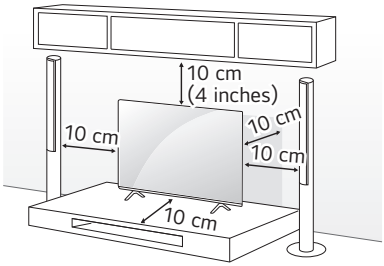

(Depending on model)

2 Connect the power cord to a wall outlet.

- Do not apply foreign substances (oils, lubricants, etc.) to the screw parts when assembling the product. (Doing so may damage the product.)
- If you install the TV on a stand, you need to take actions to prevent the product from overturning. Otherwise, the product may fall over, which may cause injury.
- Do not use any unapproved items to ensure the safety and product life span.
- Any damage or injuries caused by using unapproved items are not covered by the manufacturer's warranty.
- When assembling the stand, ensure that all of the provided screws are attached. If the screws are not fully tightened, the product may tilt or tip over, resulting in damage. Tightening the screws with excessive force may cause them to come off due to abrasion of the screw joint.

Securing the TV to a Wall

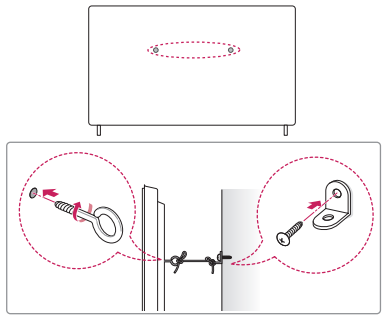

(Depending on model)

1 Insert and tighten the eye-bolts, or TV brackets and bolts on the back of the TV.
- If there are bolts inserted at the eye-bolts position, remove the bolts first.

2 Mount the wall brackets with the bolts to the wall. Match the location of the wall bracket and the eye-bolts on the rear of the TV.

3 Connect the eye-bolts and wall brackets tightly with a sturdy rope. Make sure to keep the rope horizontal with the flat surface.

- Use a platform or cabinet that is strong and large enough to support the TV securely.
- Brackets, bolts and ropes are not provided. You can obtain additional accessories from your local dealer.

Mounting on a Wall

An optional wall mount can be used with your LG Television. Consult with your local dealer for a wall mount that supports the VESA standard used by your TV model. Carefully attach the wall mount bracket at the rear of the TV. Install the wall mount bracket on a solid wall perpendicular to the floor. If you are attaching the TV to other building materials, please contact qualified personnel to install the wall mount. Detailed instructions will be included with the wall mount. We recommend that you use an LG brand wall mount. The LG wall mount is easy to adjust or to connect the cables. When you do not use LG's wall mount bracket, use a wall mount bracket where the device is adequately secured to the wall with enough space to allow connectivity to external devices. If you are using a non-adjustable mount, attach the mount to the wall. Attach the cables to the TV first, then attach the TV to the mount.

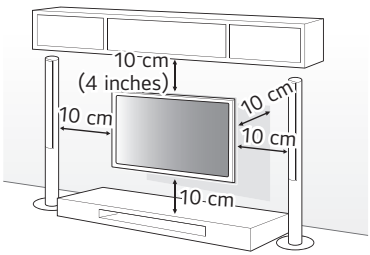

- Remove the stand before installing the TV on a wall mount by performing the stand attachment in reverse.
- For more information of screws and wall mount bracket, refer to the Separate purchase.
- If you intend to mount the product to a wall, attach VESA standard mounting interface (optional parts) to the back of the product. When you install the set to use the wall mounting bracket (optional parts), fix it carefully so as not to drop.
- When mounting a TV on the wall, make sure not to install the TV by hanging the power and signal cables on the back of the TV.
- Do not install this product on a wall if it could be exposed to oil or oil mist. This may damage the product and cause it to fall.

- When installing the wall mounting bracket, it is recommended to cover the stand hole using tape, in order to prevent the influx of dust and insects. (Depending on model)

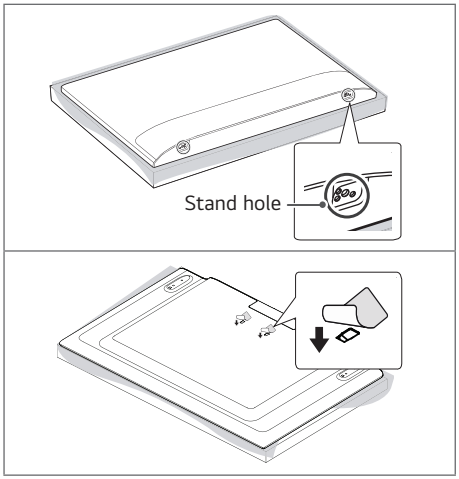

Connections

You can connect various external devices to the TV. For more information on external device's connection, refer to the manual provided with each device.

Antenna/Cable

Connect an antenna, cable, or cable box to watch TV while referring to the following. The illustrations may differ from the actual items and an RF cable is optional.

- Make sure not to bend the copper wire of the RF cable.

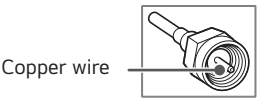

- Complete all connections between devices, and then connect the power cord to the power outlet to prevent damage to your TV.
- Use a signal splitter to use 2 TVs or more.
- This TV cannot receive ULTRA HD (3840 x 2160 pixels) broadcasts directly because the related standards have not been confirmed. (Depending upon model)

Other connections

Connect your TV to external devices. For the best picture and audio quality, connect the external device and the TV with the HDMI cable.

HDMI

- Supported HDMI Audio format:
  (Depending on model)
  Dolby Digital / Dolby Digital Plus (32 kHz / 44.1 kHz / 48 kHz),
  PCM (32 kHz / 44.1 kHz / 48 kHz / 96 kHz / 192 kHz)
  DTS (44.1 kHz / 48 kHz / 88.2 kHz / 96 kHz),
  DTS-HD (44.1 kHz / 48 kHz / 88.2 kHz / 96 kHz / 176.4 kHz / 192 kHz)

- If the device connected to Input Port also supports HDMI Deep Color, your picture may be clearer. However, if the device doesn't support it, it may not work properly. In that case, change the TV's [HDMI Deep Color] setting to off.
  (Depending on model)
- ⚙ → [⚙] → [General] → [External Devices] → [HDMI Settings] → [HDMI Deep Color]
  (Depending on model)

USB

- Some USB Hubs may not work. If a USB device connected through a USB Hub is not detected, connect it directly to the USB port on the TV.
- It is recommended that you use a USB hub or USB HDD with a power supply. (If the power supplied is not sufficient, the USB storage device may not be detected properly.)
- It is recommended that you use an external USB HDD with a rated voltage of 5 V of less and a rated current of 500 mA or less.

External Devices

Supported external devices are: Blu-ray player, HD receivers, DVD players, VCRs, audio systems, USB storage devices, PC, gaming devices, and other external devices.

- The external device connections shown may differ slightly from illustrations in a manual.
- Connect external devices to the TV regardless about the order of the TV port.
- If you connect a gaming device to the TV, use the cable supplied with the gaming device.
- Refer to the external equipment's manual for operating instructions.
- In PC mode, there may be noise associated with the resolution, vertical pattern, contrast or brightness. If noise is present, change the PC output to another resolution, change the refresh rate to another rate or adjust the brightness and contrast on the [Picture] menu until the picture is clear. Depending upon the graphics card, some resolution settings may not allow the image to be positioned on the screen properly.
- When connecting via a wired LAN, it is recommended to use a CAT 7 cable. (Depending upon model)

External Speakers

(Depending on model)

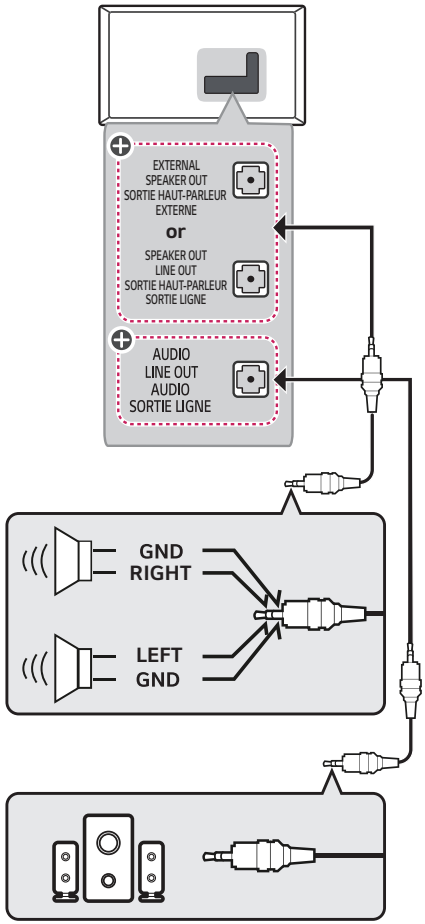

⊕: Depending on model

⚠
- Use only with the 3 Pole 3.5 mm Stereo Jack.
- Do not connect your headphones or earphones to the port for connecting an external speaker.

Method of volume control port

(Depending on model)

- Cable Spec.

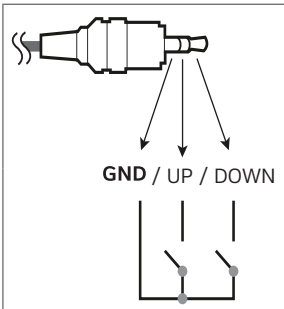

	Each up/ down pins are connected to CPU with pull up resistor respectively.
	CPU detects transition from 3.3 V to **GND** level for volume control.

Network setup

(Depending upon model)

Wired network connection

This TV can be connected to a Pro:Centric server via the **LAN** port. After making the physical connection, the TV needs to be set up for network communication.
Connect the **LAN** port of the Modem or Router from Pro:Centric server to the **LAN** port on the TV.

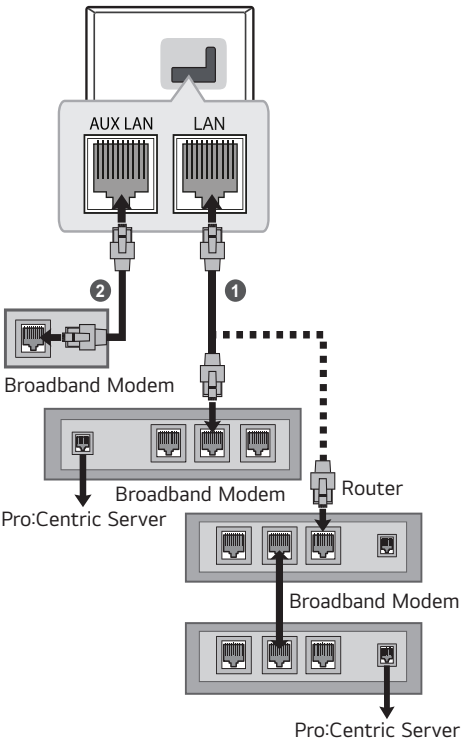

1. Connect the **LAN** port of the Modem or Router to the **LAN** port on the TV.
2. Connect the **LAN** port of the PC to the **AUX LAN** port on the TV. (Depending on model)

- Do not connect a modular phone cable to the **LAN** port.
- Since there are various connection methods, please follow the specifications of your telecommunication carrier or internet service provider.

Using Button

You can simply operate the TV functions, using the button.

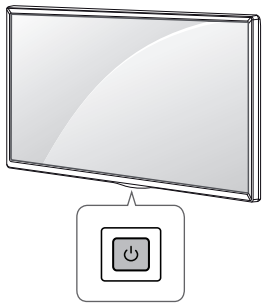

Basic functions

	Power On (Press) Power Off [1] (Press)

1) All running apps will close.

Using Remote Control

The descriptions in this manual are based on the buttons on the remote control. Please read this manual carefully and use the TV correctly.
To replace batteries, open the battery cover, replace batteries (1.5 V AA) matching the ⊕ and ⊖ ends to the label inside the compartment, and close the battery cover. Be sure to point the magic remote toward the remote control sensor on the TV.

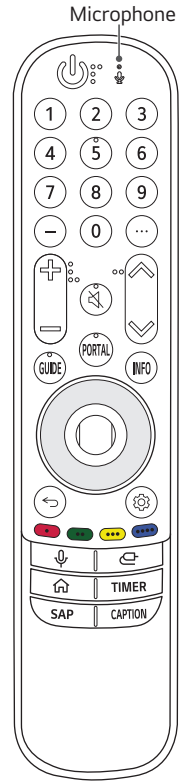

(Some buttons and services may not be provided depending on models or regions.)

*** To use the button, press and hold for more than 3 seconds.**

(Power) Turns the TV on or off.

Number buttons Enters numbers.

(Dash) Inserts a dash between numbers such as 2-1 and 2-2.

(More actions) Displays more remote control functions.

(Volume buttons) Adjusts the volume level.

(Channel buttons) Scrolls through the saved channels.

(Mute) Mutes all sounds.

PORTAL

- Pro:Centric: Displays and removes Pro:Centric Application.
- No Pro:Centric: Accesses the Home menu.

GUIDE Displays the program event according to time scheduler.

INFO Shows information on the current program.

(Wheel (OK)) Press the center of button to select a menu. You can change channels by using button.

(Up/Down/Left/Right) Press the up, down, left or right button to scroll the menu. If you press buttons while the pointer is in use, the pointer will disappear from the screen and Magic Remote will operate like a general remote control. To display the pointer on the screen again, shake Magic Remote to the left and right.

(Back) Returns to the previous level.

(Back) Clears on-screen displays and returns to last input viewing.

(Q. Settings) Accesses the Quick Settings.

, , , These access special functions in some menus.

(Voice recognition) Network connection is required to use the voice recognition function. Check for recommended content. (Some recommended services may not be available in some countries.)

(Voice recognition) Speak while pressing and holding the button to use the voice recognition feature.

(Input) Changes the input source.

(Home) Accesses the Home menu.

TIMER Turns the TV off in a set amount of time.

SAP SAP (Secondary Audio Program) feature can also be enabled by pressing the button.

CAPTION Activates or deactivates the subtitles.

Registering Magic Remote Control

How to register the Magic Remote Control

To use the Magic Remote, first pair it with your TV.

1 Put batteries into the Magic Remote and turn the TV on.

2 Point the Magic Remote at your TV and press the ◯ **(Wheel (OK))** on the remote control.

* If the TV fails to register the Magic Remote, try again after turning the TV off and back on.

How to deregister the Magic Remote Control

Press the ⮌ **(Back)** and ⌂ **(Home)** buttons at the same time, for five seconds, to unpair the Magic Remote with your TV.

* Pressing and holding the ⌂ **(Home)** and ⚙ **(Q. Settings)** button will let you cancel and re-register Magic Remote at once.

⚠
- It is recommended that an Access Point (AP) be located more than 0.2 m (0.65 ft) away from the TV. If the AP is installed closer than 0.2 m (0.65 ft), the Magic remote control may not perform as expected due to frequency interference.
- Do not mix new batteries with old batteries. This may cause the batteries to overheat and leak.
- Failure to match the correct polarities of the battery may cause the battery to burst or leak, resulting in fire, personal injury, or ambient pollution.
- This apparatus uses batteries. In your community there might be regulations that require you to dispose of these batteries properly due to environmental considerations. Please contact your local authorities for disposal or recycling information.
- The product's internal and external batteries should not be exposed to excessive heat such as direct sunlight, fire, or the like.

Troubleshooting

The software version can be updated for improvement in performance.
The customer is responsible to ensure the compatibility of their equipment with any LG Electronics software. If needed, please consult with LG Electronics and update new software versions according to the guidance provided by LG Electronics.

Cannot control the TV with the remote control.
- Check the remote control sensor on the product and try again.
- Check if there is any obstacle between the product and the remote control.
- Check if the batteries are still working and properly installed (⊕ to ⊕, ⊖ to ⊖).

No image display and no sound is produced.
- Check if the product is turned on.
- Check if the power cord is connected to a wall outlet.
- Check if there is a problem in the wall outlet by connecting other products.

The TV turns off suddenly.
- Check the power control settings. The power supply may be interrupted.
- Check if the auto-off function is activated on the settings related time.
- If there is no signal while the TV is on, the TV will turn off automatically after 15 minutes of inactivity.

When connecting to the PC (HDMI), no signal is detected.
- Turn the TV off/on using the remote control.
- Reconnect the HDMI cable.
- Restart the PC with the TV on.

- **Abnormal display**
  - If the TV feels cold to the touch, there may be a small flicker when it is turned on. This is normal; there is nothing wrong with TV. Some minute dot defects may be visible on the screen, appearing as tiny red, green, or blue spots. However, they have no adverse effect on the TV's performance. Avoid touching the LCD screen or holding your finger(s) against it for long periods of time. Doing so may produce some temporary distortion effects on the screen.
  - This panel is an advanced product that contains millions of pixels. In a very few cases, you could see fine dots on the screen while you're viewing the TV. Those dots are deactivated pixels and do not affect the performance and reliability of the TV.
  - Displaying a still image for a prolonged period of time may cause an image sticking. Avoid displaying a fixed image on the TV screen for an extended length of time.

- **Generated Sound**
  - **Cracking noise** A cracking noise that occurs when watching or turning off the TV is generated by plastic thermal contraction due to temperature and humidity. This noise is common for products where thermal deformation is required.
  - **Electrical circuit humming/panel buzzing** A low level noise is generated from a high-speed switching circuit, which supplies a large amount of current to operate a product. It varies depending upon the product. This generated sound does not affect the performance and reliability of the product.

- Make sure to wring any excess water or cleaner from the cloth.
- Do not spray water or cleaner directly onto the TV screen.
- Make sure to spray just enough of water or cleaner onto a dry cloth to wipe the screen.

Settings

Selecting Picture Mode

⚙ → [⚙] → [Picture] → [Select Mode]
Select the picture mode that is best suited to your viewing environment, preferences or video type.

- [Personalized Picture] It is set to the analyzed image quality using artificial intelligence deep learning technology.
- [Vivid] Sharpens the image by increasing the contrast, brightness and sharpness.
- [Standard] Displays the picture with natural contrast, brightness and sharpness levels.
- [Auto Power Save] Auto Power Save mode reduces power consumption by using dimming control.
- [Cinema] Suitable picture for movies.
- [Sports] / [Soccer] Suitable picture for sports games. Sharpens the image of rapid movements such as kicking or throwing a ball.
- [Game Optimizer] Suitable picture for gameplay.
- [FILMMAKER MODE] Provides optimized Cinema Picture quality certified by UHD Alliance, the standard setting body for UHD-related technologies.
- [Expert (Bright space, daytime)] / [Expert (Dark space, night)] Suitable for movies, etc. viewed in a dark environment. [Expert (Dark space, night)] has lower color temperature than [Expert (Bright space, daytime)]. Select a mode that is suitable for the movie you are watching.
- If an HDR/Dolby Vision video signal is input to the models that do not support the HDR/Dolby Vision technology, normal signal picture mode options will be made available.
- Depending upon the input signal, the available picture models may be different.
- When watching online service content, the Picture Mode may be changed to match the content being shown.
- [Expert] is an option that allows a picture quality expert to fine-tune the quality of the standard picture. Thus, it may not be effective for a normal picture.
- [Select Mode] changes may modify [Energy Saving] and [Motion Eye Care] settings and it can affect energy consumption.

Adjusting the Brightness of a Picture

⚙ → [⚙] → [Picture] → [Advanced Settings] → [Brightness]
Adjust the brightness of the entire screen.

- [OLED Pixel Brightness] Adjusts the display brightness by varying the brightness of the OLED panel.
- [Adjust Contrast] Adjusts the contrast of the bright and dark areas of the picture.
- [Black Level] Adjusts the brightness of dark areas of the screen.
- [Auto Dynamic Contrast] Corrects the difference between the bright and dark areas of the screen for optimal results depending upon the brightness of the picture.
- [Dynamic Tone Mapping] Suitable contrast settings based on image brightness of the HDR content.
- [Peak Brightness] Adjust peak brightness for the brightest luminance.
- [Gamma(Adjust Brightness)] Adjusts the medium brightness of the picture.
- [Video Range] Adjusts the darkness of the screen in order to display a perfect black.
- [Motion Eye Care] Automatically adjusts brightness and reduces image blur based on image data which reduces eyestrain.
- Depending upon the input signal or the selected picture mode, the available options may differ.
- The configurable items differ depending upon model.

To use Energy Saving Feature

(Depending upon model)
⚙ → [⚙] → [Geneal] → [Energy Saving]
Reduces power consumption by adjusting peak screen brightness.

- [No Signal Auto Off] Configure how the TV operates when there is no video signal for a certain period.

Specifications

Product specifications may be changed without prior notice due to upgrade of product functions.
Estimated yearly energy consumption indicated on the FTC label is measured in accordance with the Test Procedures for Television Sets (USA only).
The actual energy consumption depends on the usage environment (The content watched, TV settings, etc.).

Broadcasting Specifications	
Television system	ATSC, NTSC-M, 64 & 256 QAM
Program coverage (Band)	VHF 2-13, UHF 14-69, DTV 2-69, CATV 1-135, CADTV 1-135
External antenna impedance	75 Ω

Environment condition	
Operating Temperature	0 °C to 40 °C (32 °F to 104 °F)
Operating Humidity	Less than 80 %
Storage Temperature	-20 °C to 60 °C (-4 °F to 140 °F)
Storage Humidity	Less than 85 %

Wireless module(LGSBWAC95)Specifications	
Wireless LAN (IEEE 802.11a/b/g/n/ac)	
Frequency Range	**Output Power (Max.)**
2400 to 2483.5 MHz	18.5 dBm
5150 to 5725 MHz	18 dBm
5725 to 5850 MHz	18 dBm
Bluetooth	
Frequency Range	**Output Power (Max.)**
2400 to 2483.5 MHz	9 dBm
As band channels can vary per country, the user cannot change or adjust the operating frequency. This product is configured for the regional frequency table. For consideration of the user, this device should be installed and operated with a minimum distance of 20 cm (7.8 inches) between the device and the body. FCC ID: BEJLGSBWAC95 / IC: 2703H-LGSBWAC95	

HDMI-DTV supported mode

Resolution	Horizontal Frequency (kHz)	Vertical Frequency (Hz)
640 x 480p	31.46 31.50	59.94 60.00
720 x 480p	31.46 31.50	59.94 60.00
720 x 576p	31.25	50.00
1280 x 720p	44.95 45.00 37.50	59.94 60.00 50.00
1920 x 1080i	28.12 33.71 33.75	50.00 59.94 60.00
1920 x 1080p	26.97 27.00 28.12 33.71 33.75 56.25 67.43 67.50	23.97 24.00 25.00 29.97 30.00 50.00 59.94 60.00
1920 x 1080p[1)]	112.50 134.86 135.00	100.00 119.88 120.00
3840 x 2160p	53.94 54.00 56.25 67.43 67.50 112.50 134.86 135.00	23.97 24.00 25.00 29.97 30.00 50.00 59.94 60.00
3840 x 2160p[1)]	225.00 269.73 270.00	100.00 119.88 120.00
4096 x 2160p	53.94 54.00 56.25 67.43 67.50 112.50 134.86 135.00	23.97 24.00 25.00 29.97 30.00 50.00 59.94 60.00
4096 x 2160p[1)]	225.00 269.73 270.00	100.00 119.88 120.00
2560 x 1080p[2)]	66.00	60.00
2560 x 1080p[1) 2)]	131.74	120.00

1) Only some HDMI input ports are supported.
2) Supported when Wide Aspect Ratio is set to 21:9.

HDMI-PC supported Mode

- PC audio is not supported.
- Use HDMI IN 1 for PC mode. (Depending on model)

Resolution	Horizontal Frequency (kHz)	Vertical Frequency (Hz)
640 x 350	31.46	70.09
720 x 400	31.46	70.08
640 x 480	31.46	59.94
800 x 600	37.87	60.31
1024 x 768	48.36	60.00
1360 x 768[3)]	47.71	60.01
1152 x 864	54.34	60.05
1280 x 1024	63.98	60.02
1920 x 1080	67.50	60.00
1920 x 1080[1)]	134.86 135.00	119.88 120.00
3840 x 2160	53.94 54.00 56.25 67.43 67.50 112.50 134.86 135.00	23.97 24.00 25.00 29.97 30.00 50.00 59.94 60.00
3840 x 2160[1)]	225.00 269.73 270.00	100.00 119.88 120.00
4096 x 2160	53.94 54.00 56.25 67.43 67.50 112.50 134.86 135.00	23.97 24.00 25.00 29.97 30.00 50.00 59.94 60.00
4096 x 2160[1)]	225.00 269.73 270.00	100.00 119.88 120.00
2560 x 1440[2)]	88.78	59.95
2560 x 1440[1) 2)]	182.99	119.99
2560 x 1080[4)]	66.00	60.00
2560 x 1080[1) 4)]	131.74	120.00
3840 x 1600[4)]	99.41	60.00
3840 x 1080[5)]	66.62	60.00
3840 x 1080[1) 5)]	137.25	120.00

1) Only some HDMI input ports are supported.
2) Supported when HDMI Deep Color is set to 4K.
3) Supported when HDMI Deep Color is set to off
4) Supported when Wide Aspect Ratio is set to 21:9.
5) Supported when Wide Aspect Ratio is set to 32:9.

Supported Photo Formats

File Format	Format	Resolution
.jpeg .jpg .jpe	JPEG	Minimum: 64 (W) x 64 (H) Maximum (Normal Type): 15360 (W) x 8640 (H) Maximum (Progressive Type): 4800 (W) x 3600 (H)
.png	PNG	Minimum: 64 (W) x 64 (H) Maximum: 5760 (W) x 5760 (H)
.bmp	BMP	Minimum: 64 (W) x 64 (H) Maximum: 1920 (W) x 1080 (H)
.heif .heic	HEIF	Minimum: 64 (W) x 64 (H) Maximum: 4800 (W) x 3600 (H)
.avif	AVIF	Minimum: 64 (W) x 64 (H) Maximum: 4800 (W) x 3600 (H)

Supported Audio Formats

File Format	Item	Info
.mp3	Bit rate	32 Kbps - 320 Kbps
	Sample freq.	16 kHz - 48 kHz
	Support	MPEG1, MPEG2
	Channels	mono, stereo
.wav	Bit rate	-
	Sample freq.	8 kHz - 96 kHz
	Support	PCM
	Channels	mono, stereo
.ogg	Bit rate	64 kbps - 320 kbps
	Sample freq.	8 kHz - 48 kHz
	Support	Vorbis
	Channels	mono, stereo
.wma	Bit rate	128 kbps - 320 kbps
	Sample freq.	8 kHz - 48 kHz
	Support	WMA
	Channels	up to 6 ch
.flac	Bit rate	-
	Sample freq.	8 kHz - 96 kHz
	Support	FLAC
	Channels	mono, stereo

- The number of supported programmes may vary depending on the sample frequency.

Supported Video Formats

Extension	Codec	
.asf .wmv	Video	VC-1 Advanced Profile (except for WMVA), VC-1 Simple and Main Profiles
	Audio	WMA Standard (except for WMA v1/ WMA Speech)
.avi	Video	Xvid (GMC is not supported), H.264/AVC, Motion Jpeg, MPEG-4
	Audio	MPEG-1 Layer I, II, MPEG-1 Layer III (MP3), Dolby Digital, LPCM, ADPCM
.mp4 .m4v .mov	Video	H.264/AVC, MPEG-4, HEVC, AV1
	Audio	Dolby Digital, Dolby Digital Plus, AAC, MPEG-1 Layer III (MP3), Dolby AC-4[1)], DTS[1)], DTS-HD[1)], DTS:X[1)]
.3gp .3g2	Video	H.264/AVC, MPEG-4
	Audio	AAC, AMR-NB, AMR-WB
.mkv	Video	MPEG-2, MPEG-4, H.264/AVC, VP8, VP9, HEVC, AV1
	Audio	Dolby Digital, Dolby Digital Plus, AAC, PCM, DTS[1)], DTS-HD[1)], DTS:X[1)], MPEG-1 Layer I, II, MPEG-1 Layer III (MP3)
.ts .trp .tp .mts	Video	H.264/AVC, MPEG-2, HEVC
	Audio	MPEG-1 Layer I, II, MPEG-1 Layer III (MP3), Dolby Digital, Dolby Digital Plus, AAC, PCM, DTS[1)], DTS-HD[1)], DTS:X[1)], Dolby AC-4[1)]
.mpg .mpeg .dat	Video	MPEG-1, MPEG-2
	Audio	MPEG-1 Layer I, II, MPEG-1 Layer III (MP3)
.vob	Video	MPEG-1, MPEG-2
	Audio	Dolby Digital, MPEG-1 Layer I, II, DVD-LPCM

1) Dolby AC-4, DTS, DTS-HD, DTS:X: This feature is available in certain models only.

Cautions for Video Playback

- ULTRA HD Video: 3840 x 2160, 4096 x 2160
- Some HEVC encoded ULTRA HD videos other than the content officially provided by LG Electronics may not be played.
- Some codecs can be supported after a software upgrade.

Extension	Codec	
.mkv .mp4 .ts	Video	H.264/AVC, HEVC
	Audio	Dolby Digital, Dolby Digital Plus, AAC

Supported External Subtitles

Subtitle	Format
External Subtitle	*.smi, *.srt, *.sub (MicroDVD, SubViewer 1.0/2.0), *.ass, *.ssa, *.txt (TMPlayer), *.psb (PowerDivX), *.dcs (DLP Cinema)
Embedded Subtitle	Matroska(mkv): Sub Station Alpha (SSA), Advanced Sub Station Alpha (ASS), SRT MP4: Timed Text

Open Source Software Notice Information

To obtain the source code that is contained in this product, under GPL, LGPL, MPL, and other open source licenses that have the obligation to disclose source code, and to access all referred license terms, copyright notices and other relevant documents, please visit *https://opensource.lge.com*.
LG Electronics will also provide open source code to you on CD-ROM for a charge covering the cost of performing such distribution (such as the cost of media, shipping, and handling) upon email request to *opensource@lge.com*.
This offer is valid to anyone in receipt of this information for a period of three years after our last shipment of this product.

Updating Firmware

(Depending upon model)
You can update the firmware for the product by downloading the latest firmware.

1 Download the latest firmware at *partner.lge.com*. (Signing up for a membership and log-in required)
2 Create a folder named “LG_DTV” or “lg_dtv” on a USB memory device.
3 Move the downloaded file to the folder that you have created on the USB memory device.
4 Connect the USB memory device to the USB port on your TV.
5 When a pop-up window appears, start the update by following the instructions.

Licenses

Supported licenses may differ by model.

HIGH-DEFINITION MULTIMEDIA INTERFACE

The terms HDMI, HDMI High-Definition Multimedia Interface, HDMI trade dress and the HDMI Logos are trademarks or registered trademarks of HDMI Licensing Administrator, Inc.

Manufactured under license from Dolby Laboratories. Dolby, Dolby Vision, Dolby Vision IQ, Dolby Audio, Dolby Atmos, and the double-D symbol are trademarks of Dolby Laboratories Licensing Corporation.

HEVC Advance™
Covered by patents at patentlist.accessadvance.com

The Bluetooth® word mark and logos are registered trademarks owned by Bluetooth SIG, Inc. and any use of such marks by LG Electronics Inc. is under license. Other trademarks and trade names are those of their respective owners.

For DTS patents, see *http://patents.dts.com*.
Manufactured under license from DTS, Inc. (for companies headquartered in the U.S./Japan/Taiwan) or under license from DTS Licensing Limited (for all other companies).
DTS, DTS:X, and the DTS:X logo are registered trademarks or trademarks of DTS, Inc. in the United States and other countries.
© 2021 DTS, Inc. ALL RIGHTS RESERVED.

Precautions for Protecting the OLED TV Screen

Unlike regular LED/LCDs, OLED TVs produce images that emit light for each pixel, achieving a perfect black color and delivering clear images without blurring.
Due to the nature of the organic materials used to achieve high-resolution image quality, OLED displays generally experience image retention on the screen, which can be a persistent phenomenon. This phenomenon is observed in all OLED panels, and although recommended picture modes can minimize image retention, current technology cannot completely prevent this from occurring. Displaying the same image for a long time or repeatedly displaying the same image can cause image retention on the screen, which is a common phenomenon in OLED panel products due to the nature of the product. This product has a built-in screen protection feature. Avoid displaying images that are likely to cause image retention, and follow the recommendations.

Images that are likely to cause image retention

- Images with black areas on the top and bottom and/or the left and right sides of the screen.
- Images whose aspect ratio is 4:3 or 21:9.
- Images that are fixed for a long time, such as channel number, station logo, game console icon, set-top box menu, etc.
- Other fixed screen images or repeatedly displayed images.

Running [Pixel Cleaning] to Protect the OLED TV Screen

The OLED TV is equipped with a pixel cleaning feature to check the status of the screen by itself and prevent image retention. This feature is automatically calculates the optimal execution time based on the accumulated viewing time and is automatically executed when the TV is turned off. While this feature is running, horizontal lines may appear at the top and bottom of the screen. The pixel cleaning feature works when the product is connected to the power cord and main power.

- To run this function manually, press the ⚙ button on the remote control, go to [⚙] → [General] → [OLED Care] → [OLED Panel Care] and press [Pixel Cleaning].

Recommendations for Minimizing Image Retention

When watching the TV for a long time, press the ⚙ button on the remote control, go to [⚙] → [Picture] → [Select Mode] and set the mode to [Auto Power Save], go to [Advanced Settings] → [Brightness] and set [OLED Pixel Brightness] to a lower level. In addition, press the ⚙ button on the remote control, go to [⚙] → [General] → [OLED Care] → [OLED Panel Care] and set the [Adjust Logo Brightness] value to [High].
When showing images with black bars at the top/bottom/left/right side of the screen, press the ⚙ button on the remote control, press [⚙], and go to [Picture] → [Aspect Ratio] → [User Selection] → [Vertical Zoom] or [4-Way Zoom] to remove the black bars.
Turn off the menus for setting up devices such as set-top boxes so that they are not displayed on the screen for a long time.

⚠ • When the screen is showing one fixed image for a long time, the screen brightness will be automatically reduced and then restored once the screen content changes. This is a normal function to minimize image retention.

IR Codes

• This feature is not available for all models.

Code (Hexa)	Function	Code (Hexa)	Function
08	(Power)	28	(Back)
10-19	Number Key 0-9	43	(Q. Settings)
4C	— (Dash)	C1	(Red)
09	(Mute)	C0	(Green)
02	+	C2	(Yellow)
03	▭	C3	(Blue)
00	^	0B	(Input)
01	v	7C	(Home)
AB	GUIDE	0E	TIMER
0C	PORTAL	0A	SAP
AA	INFO	39	CAPTION
44	OK		
40	△ (Up)		
41	▽ (Down)		
07	◁ (Left)		
06	▷ (Right)		

External Control Device Setup

RS-232C Setup

• Image shown may differ from your TV.
Connect the RS-232C (serial port) input jack to an external control device (such as a computer or an A/V control system) to control the product's functions externally.
Connect the serial port of the control device to the RS-232C jack on the product back panel.

• RS-232C connection cables are not supplied with the product.

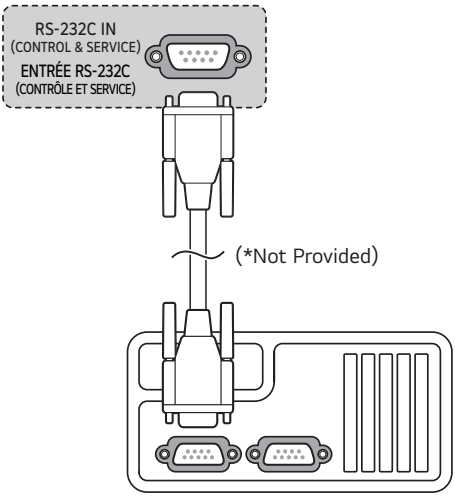

(Depending upon model)

Phone jack Type

(Depending upon model)

• You need to purchase the phone-jack to RS-232C cable required for the connection between the PC and the TV, which is specified in the manual.

* For other models, connect to the USB port.

* The connection interface may differ from your TV.

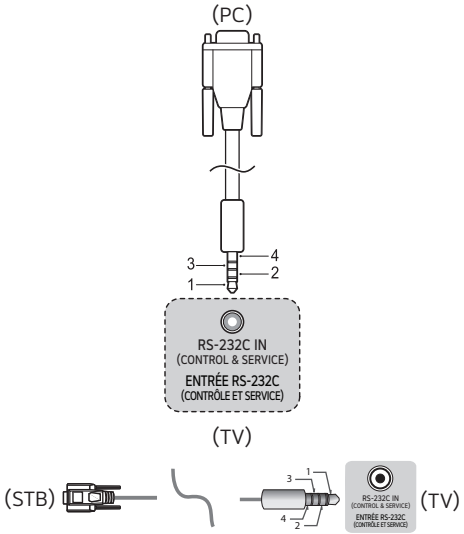

Type of Connector: D-Sub 9-Pin Male

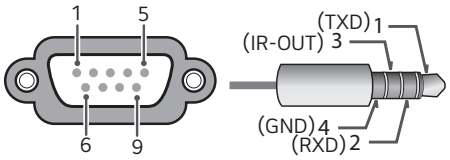

No.	Pin name
1	3.5 V
2	RXD (Receive data)
3	TXD (Transmit data)
4	IR OUT* from TV *: Depending upon model
5	GND
6	No Connection
7	No Connection (5 V available in some models)
8	No Connection
9	No Connection (12 V available in some models)

RS-232C Configurations

7-Wire Configurations (Standard RS-232C cable)

	PC		TV	
RXD	2	● ——— ●	3	TXD
TXD	3	● ——— ●	2	RXD
GND	5	● ——— ●	5	GND
DTR	4	● ——— ●	6	DSR
DSR	6	● ——— ●	4	DTR
RTS	7	● ——— ●	8	CTS
CTS	8	● ——— ●	7	RTS
	D-Sub 9		D-Sub 9	

3-Wire Configurations (Not standard)

	PC		TV	
RXD	2	● ——— ●	3	TXD
TXD	3	● ——— ●	2	RXD
GND	5	● ——— ●	5	GND
DTR	4		6	DSR
DSR	6		4	DTR
RTS	7		8	CTS
CTS	8		7	RTS
	D-Sub 9		D-Sub 9	

Communication Parameters

- Baud rate: 9,600 bps (UART)
- Data length: 8 bits
- Parity: None
- Stop bit: 1 bit
- Communication code: ASCII code
- Use a crossed (reverse) cable.

Set ID

For Set ID number, see "Real data mapping".
The adjustment range is 1-99.

- Some models support the [Set ID] up to 1000.

Command Reference List

(Depending on model)

	Command1	Command2	Data (Hexadecimal)
1 Power	k	a	00 to 01
2 Aspect Ratio	k	c	(See p. 32)
3 Screen Mute	k	d	(See p. 33)
4 Volume Mute	k	e	00 to 01
5 Volume Control	k	f	00 to 64
6 Contrast	k	g	00 to 64
7 Brightness	k	h	00 to 64
8 Color	k	i	00 to 64
9 Tint	k	j	00 to 64
10 Sharpness	k	k	00 to 32
11 OSD Select	k	l	00 to 01
12 Remote Control Lock Mode	k	m	00 to 01
13 Balance	k	t	00 to 64
14 Color Temperature	x	u	00 to 64
15 Energy Saving	j	q	(See p. 35)
16 Auto Configuration	j	u	01
17 Equalizer	j	v	(See p. 35)
18 Tune Command	m	a	(See p. 36)
19 Channel Add/Delete	m	b	00 to 01
20 Key	m	c	(See p. 37)
21 Control Backlight	m	g	00 to 64
22 Input select	x	b	(See p. 37)
23 Channel block/unblock	m	d	(See p. 38)
24 Fail Over Mode	m	i	(See p. 39)
25 Fail Over Input Select	m	j	(See p. 39)
26 Internal storage media contents play	s	n, a8	(See p. 39)

- During playing media, all commands except Power (ka) and Key (mc) are not executed and treated as NG. With RS-232C cable, TV can communicate “ka command” in power-on or power-off status. but with USB-to-Serial converter cable, the command works only if TV is on.

Transmission / Receiving Protocol

(Depending on Model)

Transmission

(Command1)(Command2)( )(Set ID)( )(Data)(Cr)

(Command1): First command to control the TV. (j, k, m or x)
(Command2): Second command to control the TV.
(Set ID): You can adjust the set ID to choose desired monitor ID number in option menu. Adjustment range is 1 to 99. When selecting Set ID '0', every connected set is controlled. Set ID is indicated as decimal (1 to 99) on menu and as Hexa decimal (0 x 0 to 0 x 63) on transmission/ receiving protocol.
(Data): To transmit command data. Transmit 'FF' data to read status of command.
(Cr): Carriage Return
ASCII code '0 x 0D'
( ): ASCII code 'space (0 x 20)'

⚠ • Some models support the Set ID up to 1000 (Hexa decimal 0 x 3E8).

OK Acknowledgement

(Command2)( )(Set ID)( )(OK)(Data)(x)

* The set transmits ACK (acknowledgement) based on this format when receiving normal data. At this time, if the data is data read mode, it indicates present status data. If the data is data write mode, it returns the data of the PC computer.

Error Acknowledgement

(Command2)( )(Set ID)( )(NG)(Data)(x)

* The set transmits ACK (acknowledgement) based on this format when receiving abnormal data from non-viable functions or communication errors.

Data 00: Illegal Code

1 Power (Command: k a)

▶ To control Power On/Off of the set.

Transmission

(k)(a)( )(Set ID)( )(Data)(Cr)

Data 00: Off
Data 01: On

Ack

(a)( )(Set ID)( )(OK/NG)(Data)(x)

▶ To Show TV is Power On/Off.

Transmission

(k)(a)( )(Set ID)( )(FF)(Cr)

Ack

(a)( )(Set ID)( )(OK/NG)(Data)(x)

* Similarly, if other functions transmit '0 x FF' data based on this format, Acknowledgement data feed back presents status about each function.
* OK Ack., Error Ack. and other message may display on the screen when TV is power On.

2 Aspect Ratio (Command: k c) (Main Picture Size)

▶ To adjust the screen format. (Main picture format) You can also adjust the screen format using the picture settings.

Transmission

(k)(c)( )(Set ID)( )(Data)(Cr)

Data 01: 4:3 (Normal screen - Just Scan Off)
Data 02: 16:9 (Wide screen - Just Scan Off)
Data 06: Original (Just Scan Off)
Data 09: Just Scan

* Please make sure that the model doesn't support both Vertical Zoom and All-Direction Zoom mode.

Ack

(c)( )(Set ID)( )(OK/NG)(Data)(x)

* Using the PC input, you select either 16:9 or 4:3 screen aspect ratio.
* In DTV/HDMI (1080i 50 Hz / 60 Hz, 720p 50 Hz / 60 Hz, 1080p 24 Hz / 30 Hz / 50 Hz / 60 Hz), Component (720p, 1080i, 1080p) mode, Just Scan is available.
* Full Wide is supported only for Digital, Analogue, AV.

3 Screen Mute (Command: k d)

▶ To select screen mute on/off.

Transmission

(k)(d)( )(Set ID)( )(Data)(Cr)

Data 00: Screen mute off (Picture on) / Video mute off

Data 01: Screen mute on (Picture off)

Data 10: Video mute on

Ack

(d)( )(Set ID)( )(OK/NG)(Data)(x)

* In case of video mute on only, TV will display On Screen Display (OSD). But, in case of Screen mute on, TV will not display OSD.

4 Volume Mute (Command: k e)

▶ To control volume mute on/off.
You can also adjust mute using the mute button on remote control.

Transmission

(k)(e)( )(Set ID)( )(Data)(Cr)

Data 00: Volume mute on (Volume off)

Data 01: Volume mute off (Volume on)

Ack

(e)( )(Set ID)( )(OK/NG)(Data)(x)

5 Volume Control (Command: k f)

▶ To adjust volume.
You can also adjust volume with the volume buttons on remote control.

Transmission

(k)(f)( )(Set ID)( )(Data)(Cr)

Data Min: 00 to Max: 64

* Refer to "Real data mapping".

Ack

(f)( )(Set ID)( )(OK/NG)(Data)(x)

6 Contrast (Command: k g)

▶ To adjust screen contrast.
You can also adjust contrast in the picture settings.

Transmission

(k)(g)( )(Set ID)( )(Data)(Cr)

Data Min: 00 to Max: 64

* Refer to "Real data mapping".

Ack

(g)( )(Set ID)( )(OK/NG)(Data)(x)

7 Brightness (Command: k h)

▶ To adjust screen brightness.
You can also adjust brightness in the picture settings.

Transmission

(k)(h)( )(Set ID)( )(Data)(Cr)

Data Min: 00 to Max: 64

* Refer to "Real data mapping".

Ack

(h)( )(Set ID)( )(OK/NG)(Data)(x)

8 Color (Command: k i)

▶ To adjust the screen color.
You can also adjust color in the picture settings.

Transmission

(k)(i)( )(Set ID)( )(Data)(Cr)

Data Min: 00 to Max: 64

* Refer to "Real data mapping".

Ack

(i)( )(Set ID)( )(OK/NG)(Data)(x)

9 Tint (Command: k j)

▶ To adjust the screen tint.
You can also adjust tint in the picture settings.

Transmission

(k)(j)( )(Set ID)( )(Data)(Cr)

Data Red: 00 to Green: 64

* Refer to "Real data mapping".

Ack

(j)( )(Set ID)( )(OK/NG)(Data)(x)

10 Sharpness (Command: k k)

▶ To adjust the screen sharpness.
You can also adjust sharpness in the picture settings.

Transmission

(k)(k)( )(Set ID)( )(Data)(Cr)

Data Min: 00 to Max: 32

* Refer to "Real data mapping".

Ack

(k)( )(Set ID)( )(OK/NG)(Data)(x)

11 OSD Select (Command: k l)

▶ To select OSD (On Screen Display) on/off when controlling remotely.

Transmission

(k)(l)( )(Set ID)( )(Data)(Cr)

Data 00: Off

Data 01: On

Ack

(l)( )(Set ID)( )(OK/NG)(Data)(x)

12 Remote Control Lock Mode (Command: k m)

▶ To lock the front panel controls on the monitor and remote control.

Transmission

(k)(m)( )(Set ID)( )(Data)(Cr)

Data 00: Off

Data 01: On

Ack

(m)( )(Set ID)( )(OK/NG)(Data)(x)

* If you are not using the remote control, use this mode. When main power is on/off, external control lock is released.
* In the standby mode, if key lock is on, TV will not turn on by power on key of IR & Local Key.

13 Balance (Command: k t)

▶ To adjust balance.
You can also adjust balance in the audio settings.

Transmission

(k)(t)( )(Set ID)( )(Data)(Cr)

Data L: 00 to R: 64

* Refer to "Real data mapping".

Ack

(t)( )(Set ID)( )(OK/NG)(Data)(x)

14 Color Temperature (Command: x u)

▶ To adjust Color Temperature. You can also adjust Color Temperature in the picture settings.

Transmission

(x)(u)( )(Set ID)( )(Data)(Cr)

Data Warm: 00 to Cool: 64

* Refer to "Real data mapping".

Ack

(u)( )(Set ID)( )(OK/NG)(Data)(x)

15 Energy Saving (Command: j q)

▶ To reduce the power consumption of the TV. You can also adjust Energy Saving in picture settings.

Transmission

(j)(q)( )(Set ID)( )(Data)(Cr)

Power Saving Function					Level				Description
7	6	5	4		3	2	1	0	
0	0	0	0	Low Power	0	0	0	0	Off
0	0	0	0	Low Power	0	0	0	1	Minimum
0	0	0	0	Low Power	0	0	1	0	Medium
0	0	0	0	Low Power	0	0	1	1	Maximum
0	0	0	0	Low Power	0	1	0	1	Screen Off
0	0	0	0	Low Power	0	1	0	0	Auto

▶ Auto is available in TV that supports 'Intelligent Sensor'.

Ack

(q)( )(Set ID)( )(OK/NG)(Data)(x)

16 Auto Configuration (Command: j u) (Only RGB support model)

▶ To adjust picture position and minimize image shaking automatically. It works only in RGB (PC) mode.

Transmission

(j)(u)( )(Set ID)( )(Data)(Cr)

Data 01: To set

Ack

(u)( )(Set ID)( )(OK/NG)(Data)(x)

17 Equalizer (Command: j v)

▶ To adjust equalizer.

Transmission

(j)(v)( )(Set ID)( )(Data)(Cr)

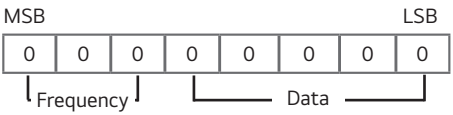

7	6	5	Frequency	4	3	2	1	0	Step
0	0	0	1st Band	0	0	0	0	0	0 (decimal)
0	0	1	2nd Band	0	0	0	0	1	1 (decimal)
0	1	0	3rd Band	...	...	...	...	...	...
0	1	1	4th Band	1	0	0	1	1	19 (decimal)
1	0	0	5th Band	1	0	1	0	0	20 (decimal)

Ack

(v)( )(Set ID)( )(OK/NG)(Data)(x)

18 Tune Command (Command: m a)

▶ To tune the channel to the following Physical Major/Minor Channel number.

Transmission

(m)(a)( )(Set ID)( )(Data0)( )(Data1)( )(Data2)( )(Data3)( )(Data4)( )(Data5)(CR)

• **Analog Antenna/Cable**

Data0: Physical Channel number
- Antenna (ATV): 02~45 (Decimal: 2~69)
- Cable (CATV): 01~7D (Decimal: 1~125)

Data1~4: Major/Minor Channel number
- Data1 & Data2: xx (Don't care)
- Data3 & Data4: xx (Don't care)

Data5: Input Source (Analog)*
- 00: Antenna (ATV)
- 01: Cable (CATV)

* Installer Menu items 003 BAND/AFC and 102 ATSC BAND select the tuning band(s) for the display. In order for the tune command to be executed, the Input Source value for Data5 must match each tuner's tuning band setting.

• **Digital Antenna/Cable**

Data0: Physical Channel number**
- Antenna (DTV): 02~45 (Decimal: 2~69)
- Cable (CADTV): 01~87 (Decimal: 1~135)

** When (Data5) is 22, 26, or 66 (see below), use 00 for (Data0).

Data1 & Data2: Major Channel number
- Data1: High byte channel data
- Data2: Low byte channel data
  00 01~27 0F (Decimal: 1~9999)

Data3 & Data4: Minor Channel number
- Data3: High byte channel data
- Data4: Low byte channel data
  00 00~03 E7 (Decimal: 0~999)

Data5: Input Source (Digital)†
- 02: Antenna (DTV), Use Physical Channel number
- 06: Cable (Auto††) (CADTV), Use Physical Channel number
- 22: Antenna (DTV), Do not use Physical Channel number (see also (Data0) ** above)
- 26: Cable (Auto††) (CADTV), Do not use Physical Channel number (see also (Data0) ** above)
- 46: Cable (Auto††) (CADTV), Use Physical Major Channel number only (One Part Channel)
- 66: Cable (Auto††) (CADTV), Use Major Channel number only (One Part Channel), Do not use Physical Channel number (see also (Data0) ** above)

† Installer Menu items 003 BAND/AFC and 102 ATSC BAND select the tuning band(s) for the display. In order for the tune command to be executed, the Input Source value for (Data5) must match each tuner's tuning band setting.

†† Cable bands Cable Std - x3, Cable HRC - x4, and Cable IRC - x5 can also be used in (Data5) lower nibble.

Two bytes are available for each Major and Minor Channel number. The high byte is 00 unless the channel number exceeds 255.

Tune Command Examples:

Example 1: Tune to analog cable channel 35

Set ID = All = 00
Data0 = Channel Data is 35 = 23
Data1 & Data2 = No Major = 00 00
Data3 & Data4 = No Minor = 00 00
Data5 = Analog Cable = 01
Total = ma 00 23 00 00 00 00 01

Example 2: Tune to digital antenna channel 30~3

Set ID = All = 00
Data0 = Don't know Physical = 00
Data1 & Data2 = Major is 30 = 00 1E
Data3 & Data4 = Minor is 3 = 00 03
Data5 = Digital Antenna = 22
Total = ma 00 00 00 1E 00 03 22

Ack

(a)( )(Set ID)( )(OK)(Data 0)(Data1)(Data2)(Data3)(Data4)(Data5)(x)(a)( )(Set ID)( )(NG)(Data0)(x)

19 Channel Add/Delete (Command: m b)

▶ To set the saved channel status.

Transmission

(m)(b)( )(Set ID)( )(Data)(Cr)

Data 00: Delete
Data 01: Add

Ack

(b)( )(Set ID)( )(OK/NG)(Data)(x)

20 Key (Command: m c)

▶ To send IR remote key code.

Transmission

(m)(c)( )(Set ID)( )(Data)(Cr)

Data "IR Codes"

Ack

(c)( )(Set ID)( )(OK/NG)(Data)(x)

21 Control Backlight (Command: m g)

▶ To control the backlight.

Transmission

(m)(g)( )(Set ID)( )(Data)(Cr)

Data Min: 00 to Max: 64

Ack

(g)( )(Set ID)( )(OK/NG)(Data)(x)

22 Input select (Command: x b) (Main Picture Input)

▶ To select input source for main picture.

Transmission

(x)(b)( )(Set ID)( )(Data)(Cr)

Data Structure

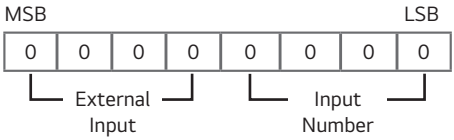

External Input				Data
0	0	0	0	DTV
0	0	0	1	Analogue
0	0	1	0	AV
0	1	0	0	Component
0	1	1	0	RGB
0	1	1	1	HDMI
1	0	0	0	
1	0	0	1	
1	0	1	0	

Input Number				Data
0	0	0	0	Input1
0	0	0	1	Input2
0	0	1	0	Input3
0	0	1	1	Input4

Ack

(b)( )(Set ID)( )(OK/NG)(Data)(x)

23 Channel block/unblock (Command: m d)

▶ This command may work differently depending on model and signal.

(For South Korea, North/Latin America except Colombia Model)

Transmission

(m)(d)( )(Set ID)( )(Data 00)( )(Data 01)( )(Data 02)(Data 03)(Data 04)( )(Data 05)( )(Data 06)(Cr)

(Data 00): Physical Channel Number
(Data 01)(Data 02): Major Channel Number
- (Data 01): High Channel data
- (Data 02): Low Channel data
  00 00 ~ 27 0F (Decimal: 0 ~ 9999)

(Data 03)(Data 04): Minor Channel Number
- (Data 03): High Channel data
- (Data 04): Low Channel data

(Data 05): Input Source
- 02: Antenna TV (DTV)
- 06: Cable TV (CADTV)
- 0b: Cable DTV Plus

(Data 06): block(01)/unblock(00)

Ack

(d)( )(Set ID)( )(OK/NG)(Data 00)(Data 01)(Data 02)(Data 03)(Data 04)(Data 05)(Data 06)(x)

* Block/Unblock Command Examples
  Block/Unblock Cable DTV Channel 18-2
(Set ID) = 01
(Data 00) = Physical Channel Number 18 = 12(HEX)
(Data 01) & (Data 02) = Major Channel Number is 18 = 00 12(HEX)
(Data 03) & (Data 04) = Minor Channel Number is 2 = 00 02(HEX)
(Data 05) = cable DTV = 06
(Data 06) = block(01)/unblock(00)
Result:

md 01 12 00 12 00 02 06 (01/00)

(For all other regions including Colombia, Excluding the above countries)

Transmission

(m)(d)( )(Set ID)( )(Data 00)( )(Data 01)( )(Data 02)(Data 03)(Data 04)(Cr)

(Data 00): Physical Channel Number
(Data 01)(Data 02): Channel Data
- (Data 01): High Channel data
- (Data 02): Low Channel data
  00 00 ~ 27 0F (Decimal: 0 ~ 9999)

(Data 03): Input Source
- 10: Antenna TV (DTV)
- 20: Antenna Radio (Radio)
- 40: Satellite TV (SDTV)
- 50: Satellite Radio (S-Radio)
- 90: Cable TV (CADTV)
- a0: Cable Radio (CA-Radio)

(Data 04): block(01)/unblock(00)

Ack

(d)( )(Set ID)( )(OK/NG)(Data 00)(Data 01)(Data 02)(Data 03)(Data 04)(x)

* Block/Unblock Command Examples
  Block/Unblock Digital Antenna Channel 800
(Set ID) = All = 01
(Data 00) = Physical Channel Number 30 = 1E
(Data 01) & (Data 02) = Channel Data is 800 = 03 20
(Data 03) = Digital Antenna TV = 10
(Data 04) = block/unblock = (01/00)
Result:

md 01 1E 03 20 10 (01/00)

24 Fail Over Mode (Command: m i)

▶ Selects the Fail Over mode.

Transmission

(m)(i)( )(Set ID)( )(Data)(Cr)

Data 00: Off

Data 01: Auto

Data 02: Manual

Ack

(i)( )(Set ID)( )(OK/NG)(Data)(x)

25 Fail Over Input Select (Command: m j)

▶ Selects an input source for fail over. (This feature is only available when Fail Over is set to Custom.)

Transmission

(m)(j)( )(Set ID)( )(Data 1)( )(Data 2)( )(Data 3)( )(Data 4)...( )(DataN)(Cr)

Data 1-N (Input priority 1-N)

Data 20: AV1

Data 21: AV2

Data 22: AV3

Data 90: HDMI1

Data 91: HDMI2

Data 92: HDMI3

Data 93: HDMI4

Ack

(j)( )(Set ID)( )(OK/NG)(Data 1)(Data 2)(Data 3)(Data 4)...(DataN)(x)

* Some input signals may not be available for all models.
* The data number (N) may vary depending on the model. (The data number depends on the number of supported input signals.)

26 Internal storage media contents play (Command: s n, a8)

▶ Plays media stored in the internal memory.

▶ This command may work differently depending on model and signal.

Transmission

(s)(n)( )(Set ID)( )(a)(8)( )(Data)(Cr)

Data 01: Media contents play

Ack

(n)( )(Set ID)( )(OK/NG)(a)(8)( )(Data)(x)

*** Real data mapping**

00 :	Step 0
A :	Step 10 (Set ID 10)
F :	Step 15 (Set ID 15)
10 :	Step 16 (Set ID 16)
64 :	Step 100
6E :	Step 110
73 :	Step 115
74 :	Step 116
CF :	Step 199
FE :	Step 254
FF :	Step 255

IR OUT Using Guide

Suitable / Not Recommend remote-controller data format

Item	Data format code	Note
Suitable Data Format	NEC, Toshiba Full Repeat Code Format	Single: Enable Repeat: Enable
	Philips RC5, RC6 Code Format	
	Zenith Code Format	
Not Recommend Data Format	Matsushita, RCA Code Format	Single: Enable Repeat: Disable
	Sony 12/15/20 bit, Mitsubishi Code Format	
	Sharp, JVC, R-step, Philips RCMM, RECS-80, XMP Code Format	Single: Disable Repeat: Disable

IR Receiver specifications

Carrier frequency	37.9 KHz
Peak Wavelength	940 nm
Minimum burst length	Min. 300 us
Minimum gap time is required of	Min. 350 us
Data word length	Max. 100 ms
Minimum gap time in the data stream is needed of	Min. 50 ms

Parameter	Symbol	Conditions	Min	Typ	Max	Unit
High Level Out Pulse Width	Twh	Burst Wave = 600 μs Period = 1.2 ms	400	-	800	μs
Low Level Out Pulse Width	Twl		400	-	800	μs

⚠ If not use the remote-controller with data formats recommended, IR output signals will be suppressed automatically by IR receiver. In this case, LG does not guarantee IR working function. To make sure of this matter, here are two methods as below.

- Use the remote-controller with suitable data formats.
- Use the IR dongle receiver of the set-top box.

Regulatory

FCC Notice

(For USA)
This equipment has been tested and found to comply with the limits for a Class B digital device, pursuant to Part 15 of the FCC Rules. These limits are designed to provide reasonable protection against harmful interference in a residential installation. This equipment generates, uses, and can radiate radio frequency energy and, if not installed and used in accordance with the instructions, may cause harmful interference to radio communications. However, there is no guarantee that interference will not occur in a particular installation. If this equipment does cause harmful interference to radio or television reception, which can be determined by turning the equipment off and on, the user is encouraged to try to correct the interference by one or more of the following measures:

- Reorient or relocate the receiving antenna.
- Increase the separation between the equipment and the receiver.
- Connect the equipment to an outlet on a circuit different from that to which the receiver is connected.
- Consult the dealer or an experienced radio/TV technician for help.

This device complies with part 15 of the FCC Rules. Operation is subject to the following two conditions: (1) this device may not cause harmful interference and (2) this device must accept any interference received, including interference that may cause undesired operation. Any changes or modifications in construction of this device which are not expressly approved by the party responsible for compliance could void the user's authority to operate the equipment.

FCC Radio Frequency Interference Requirements (for UNII devices)

(For USA)
High power radars are allocated as primary users of the 5.25 to 5.35 GHz and 5.65 to 5.85 GHz bands. These radar stations can cause interference with and/or damage this device. This device cannot be co-located with any other transmitter.

FCC RF Radiation Exposure Statement

(For USA)
[For having wireless function (WLAN, Bluetooth,...)]
This equipment complies with FCC radiation exposure limits set forth for an uncontrolled environment. This transmitter must not be co-located or operating in conjunction with any other antenna or transmitter.
This equipment should be installed and operated with minimum distance 20 cm (7.8 inches) between the antenna and your body. Users must follow the specific operating instructions for satisfying RF exposure compliance.

Industry Canada Statement

(For Canada)
[For having wireless function (WLAN, Bluetooth,...)]
This device contains licence-exempt transmitter(s)/ receiver(s) that comply with Innovation, Science and Economic Development Canada's licence-exempt RSS(s). Operation is subject to the following two conditions:
(1) This device may not cause interference.
(2) This device must accept any interference, including interference that may cause undesired operation of the device.

IC Radiation Exposure Statement

(For Canada)
[For having wireless function (WLAN, Bluetooth,...)]
This equipment complies with IC radiation exposure limits set forth for an uncontrolled environment. This equipment should be installed and operated with minimum distance 20 cm (7.8 inches) between the antenna & your body.
NOTE: THE MANUFACTURER IS NOT RESPONSIBLE FOR ANY RADIO OR TV INTERFERENCE CAUSED BY UNAUTHORIZED MODIFICATIONS TO THIS EQUIPMENT. SUCH MODIFICATIONS COULD VOID THE USER'S AUTHORITY TO OPERATE THE EQUIPMENT.

RSS-247 Requirement

(For Canada)
[For product having the wireless function using 5 GHz frequency bands]
(1) The device for operation in the band 5150–5250 MHz is only for indoor use to reduce the potential for harmful interference to co-channel mobile satellite systems;
(2) For devices with detachable antenna(s), the maximum antenna gain permitted for devices in the bands 5250-5350 MHz and 5470-5725 MHz shall be such that the equipment still complies with the e.i.r.p. limit;
(3) For devices with detachable antenna(s), the maximum antenna gain permitted for devices in the band 5725-5850 MHz shall be such that the equipment still complies with the e.i.r.p. limits as appropriate; and
(4) [For devices operating in the band 5250-5350 MHz having an e.i.r.p. greater than 200 mW] Antenna type(s), antenna models(s), and worst-case tilt angle(s) necessary to remain compliant with the e.i.r.p. elevation mask requirement set forth in section 6.2.2.3 of RSS-247 shall be clearly indicated.

Users should also be advised that high-power radars are allocated as primary users (i.e. priority users) of the bands 5250-5350 MHz and 5650-5850 MHz and that these radars could cause interference and/or damage to LE-LAN devices.

NOTE TO CABLE/TV INSTALLER

(For USA and Canada)
This reminder is provided to call the CATV system installer's attention to Article 820-40 of the National Electric Code (U.S.A.). The code provides guidelines for proper grounding and, in particular, specifies that the cable ground shall be connected to the grounding system of the building, as close to the point of the cable entry as practical.

WARNING! (STABILITY HAZARD)

A television set may fall, causing serious personal injury or death. Many injuries, particularly to children, can be avoided by taking simple precautions such as:

- ALWAYS use cabinets or stands or mounting methods recommended by the manufacturer of the television set.
- ALWAYS use furniture that can safely support the television set.
- ALWAYS ensure the television set is not overhanging the edge of the supporting furniture.
- ALWAYS educate children about the dangers of climbing on furniture to reach the television set or its controls.
- ALWAYS route cords and cables connected to your television so they cannot be tripped over, pulled or grabbed.
- NEVER place a television set in an unstable location.
- NEVER place the television set on tall furniture (for example, cupboards or bookcases) without anchoring both the furniture and the television set to a suitable support.
- NEVER place the television set on cloth or other materials that may be located between the television set and supporting furniture.
- NEVER place items that might tempt children to climb, such as toys and remote controls, on the top of the television or furniture on which the television is placed.

If the existing television set is going to be retained and relocated, the same considerations as above should be applied.

Symbols

~	Refers to alternating current (AC).
⎓	Refers to direct current (DC).
⧈	Refers to class II equipment.
⏻	Refers to stand-by.
|	Refers to "ON" (power).
⚡	Refers to dangerous voltage.

LG Take-back & Recycling Policy

(For USA)
LG Electronics offers a customized e-waste take-back & recycling service that meets local needs and requirements in the countries where e-waste regulations are in place, and also provides product take-back & recycling service voluntarily in some regions. LG Electronics evaluates products' recyclability at the design step selectively, with the goal of improving recyclability where practicable. Through these activities, LG Electronics seeks to contribute to conserving natural resources and protecting the environment. For more information, please visit our global site at *https://www.lg.com/recycling*

Dominican Republic only

WEEE



Disposal of your old appliance

1 This crossed-out wheeled bin symbol indicates that waste electrical and electronic products (WEEE) should be disposed of separately from the municipal waste stream.
2 Old electrical products can contain hazardous substances so correct disposal of your old appliance will help prevent potential negative consequences for the environment and human health. Your old appliance may contain reusable parts that could be used to repair other products, and other valuable materials that can be recycled to conserve limited resources.
3 You can take your appliance to any of the authorized centers for collection, If you want to know an updated list of countries that have this service, visit the page *https://www.lg.com/global/take-back-recycling-global-network-south-america*



Eliminación de su viejo electrodoméstico

1 El símbolo del contenedor de basura tachado con un aspa indica que la recogida separada de aparatos eléctricos y electrónicos (AEE) debe realizarse de manera separada.
2 Los aparatos eléctricos antiguos pueden contener sustancias peligrosas, de modo que la correcta eliminación del antiguo aparato ayudará a evitar posibles consecuencias negativas para el medio ambiente y para la salud humana. El antiguo aparato puede contener piezas reutilizables que podrían utilizarse para reparar otros productos y otros materiales valiosos que pueden reciclarse para conservar los recursos limitados.
3 Puedes llevar tu aparato a cualquiera de los centros autorizados de recoleccion de residuos electricos y electronicos. Si deseas conocer una lista actualizada de los paises que cuentan con este servicio, visite la pagina *https://www.lg.com/global/take-back-recycling-global-network-south-america*

Consumer Technology Association™

CHILD SAFETY:

PROPER TELEVISION PLACEMENT MATTERS

THE CONSUMER TECHNOLOGY INDUSTRY CARES

Manufacturers, retailers and the rest of the consumer technology industry are committed to making products safe and enjoyable. As you enjoy your television, please note that all televisions – new and old- must be supported on proper stands or installed according to the manufacturer's recommendations. Televisions that are inappropriately situated on dressers, bookcases, shelves, desks, speakers, chests, carts, etc., may fall over, resulting in injury.



TUNE IN TO SAFETY

- **NEVER** allow children to climb on or play on the television or the furniture on which the television is placed.
- **NEVER** place the television on furniture that can easily be used as steps, such as a chest of drawers.
- **ALWAYS** follow the manufacturer's recommendations for the safe installation of your television.
- **ALWAYS** read and follow all instructions for proper use of your television.
- **ALWAYS** install the television where it cannot be pushed, pulled over or knocked down.
- **ALWAYS** route cords and cables connected to the television so that they cannot be tripped over, pulled or grabbed.



WALL OR CEILING MOUNT YOUR TELEVISION

- **ALWAYS** contact your retailer about professional installation if you have any doubts about your ability to safely mount your television.
- **ALWAYS** use a mount that has been recommended by the television manufacturer and has a safety certification by a Nationally Recognized Testing Laboratory (NRTL).
- **ALWAYS** follow all instructions supplied by the television and mount manufacturers.
- **ALWAYS** make sure that the wall or ceiling where you are mounting the television is appropriate. Use proper anchoring systems for different wall or ceiling types (e.g. wood, concrete, metal, etc.). If you are unsure, contact a professional installer.
- Televisions can be heavy. A minimum of two people is required for a wall or ceiling mount installation.



MOVING AN OLDER TELEVISION TO A NEW PLACE IN YOUR HOME

- **REMEMBER** Special care should be made in the placement of older CRT/flat-panel televisions. Many new television buyers move their older CRT/flat-panel televisions into a secondary room after the purchase of a flat-panel television.
- **NEVER** place your older CRT/flat-panel television on a dresser where children may be tempted to use the drawers to climb.
- **ALWAYS** place your older CRT/flat-panel television on furniture that is sturdy and appropriate for its size and weight.
- **ALWAYS** make sure your older CRT/flat-panel television does not hang over the edge of your furniture.

CTA.tech



Supplier's Declaration of Conformity	
Trade Name	LG
Responsible Party	LG Electronics USA, Inc.
Address	111 Sylvan Avenue, North Building, Englewood Cliffs, NJ 07632
E-mail	lg.environmental@lge.com

The model and serial number of the product are located on the back and on one side of the product. Record them below in case you ever need service.

Model

Serial no.

LG Customer Information Center
For inquires or comments, visit www.lg.com or call;
1-888-865-3026 USA, Commercial User
1-855-286-2456 CANADA