User Guide

ThinkStation P2 Tower Gen 2

Second Edition (September 2025)

© Copyright Lenovo 2025.

LIMITED AND RESTRICTED RIGHTS NOTICE: If data or software is delivered pursuant to a General Services Administration “GSA” contract, use, reproduction, or disclosure is subject to restrictions set forth in Contract No. GS-35F-05925.

Contents

Chapter 1. Overview 1
Front 1
Rear 3
USB specifications 4

Chapter 2. Specifications and expansion 5
Basic specifications 5
Memory 6
On-board M.2 SSD 7
PCIe card 8
SD card 9
Storage drive 9

Chapter 3. Get started 11
Connect to an external display 11
Transfer data 11
Connect to a Bluetooth device 11
Use the slim ODD 12
Use the SD card 12
Set the power plan 13
Smart power-on feature (for selected models) . . . 13
The Vantage app 13
Security solutions 14
Use physical locks 14
Use software security solutions 15
Use BIOS security solutions 16
UEFI BIOS passwords 17

Chapter 4. Explore your computer . . 19
Lenovo AI Now or Lenovo Xiaotian (for selected models) 19
UEFI BIOS 19
Enter the UEFI BIOS menu 19
Navigate the UEFI BIOS menu 19
Update the UEFI BIOS 20
From the Vantage app 20
From the Lenovo Support Web site 20
From the Windows Update 20
Remote update via Windows Remote Desktop 21
RAID 21
What is RAID 21
Configure RAID with Intel RST configuration utility 21

Chapter 5. CRU replacement 24
Before CRU replacement 24
What is CRU 24
CRU list 24
System board illustration 26
Prerequisites for hardware replacement . . . 27
Side cover 28
Slim-ODD-relevant parts 29
Slim ODD 29
Slim-ODD latch 30
Slim-ODD bezel 31
Slim-ODD cage 33
Front bezel 34
Storage 35
3.5-inch internal storage drive 36
3.5-inch internal storage drive cage 37
Storage drive in the front-access storage enclosure or optional storage drive cage . . . 37
Front-access storage enclosure or 3.5-inch optional storage drive cage 39
2.5-inch optional storage drive cage 40
On-board M.2 SSD and heat sink 41
On-board M.2 SSD holder 44
M.2 SSD and heat sink in an M.2 SSD PCIe adapter card 44
Side fan with bracket 46
PCIe cards 47
PCIe card replacement rule 47
PCIe card bracket 48
PCIe adapter card 48
Graphics card holder 49
Graphics card 50
ODD EMI shielding 54
HDD EMI shielding 55
Front fan 56
E-lock 57
Internal speaker 58
Rear fan 59
Smart cable clip 60
Rear Wi-Fi antenna cover 61
Chassis beam 62
Memory module 63

Chapter 6. Help and support 66
Find your serial number 66
Diagnose and troubleshoot your computer 66
Troubleshoot and diagnose at Lenovo Support Web site 67
Hardware scan 67

© Copyright Lenovo 2025

Use ThinkStation diagnostic tool 68
Recover your Windows operating system 68
Call Lenovo 68
Before you contact Lenovo 68
Lenovo Customer Support Center 69
Self-help resources 69
Purchase accessories or additional services . . . 69
Accessibility features. 70

Appendix A. Notice for USB connector name update 71

Appendix B. Notices and trademarks 72

About this documentation

This documentation applies to the ThinkStation product models listed below.

Model name	Machine types (MT)
ThinkStation P2 Tower Gen 2	30JQ, 30JR

Further compliance information related to your product is available at https://www.lenovo.com/compliance.

Before using this documentation, please read the following information:

- *Setup Guide*
- *Safety and Warranty Guide*
- For more compliance information, refer to *Regulatory Notice* at https://pcsupport.lenovo.com and *Generic Safety and Compliance Notices* at https://pcsupport.lenovo.com/docs/generic_notices.
- Illustrations in this documentation might look different from your product.
- Depending on the model, some optional accessories, features, software programs, and user interface instructions might not be applicable to your computer.
- Microsoft® makes periodic feature changes to the Windows® operating system through Windows Update. As a result, some information in this documentation might become outdated. Refer to Microsoft resources for the latest information.
- Documentation content is subject to change without notice. To get the latest documentation, go to https://pcsupport.lenovo.com.

Chapter 1. Overview

Front

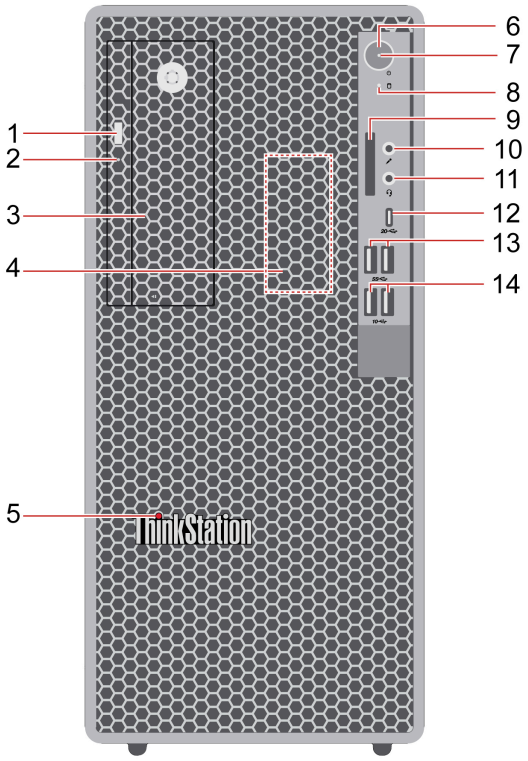

Item	Description	Item	Description
1	Slim optical drive (ODD) eject button*	2	Slim ODD activity indicator*
3	Flex bay	4	Internal speaker
5	ThinkStation® LED	6	Power button
7	Power indicator	8	Storage indicator
9	Secure Digital (SD™) card slot	10	Microphone connector
11	Headset connector	12	USB-C® connector (USB 20Gbps)*
13	USB-A connectors (USB 5Gbps)*	14	USB-A connectors (USB 10Gbps)*

Note: For more information about the USB connector name update, see Appendix A “Notice for USB connector name update” on page 71.

* for selected models

Statement on USB transfer rate

Depending on many factors such as the processing capability of the host and peripheral devices, file attributes, and other factors related to system configuration and operating environments, the actual transfer rate using the various USB connectors on this device will vary and will be slower than the data rate listed in the connector name or below for each corresponding device.

© Copyright Lenovo 2025

Flex bay

Depending on your computer model, the flex bay can be empty or installed with one of the following devices:

- 3.5-inch front-access storage enclosure
- 3.5-inch hard-disk drive (HDD)

For more details, see “Storage drive” on page 9.

Power indicator

Show the system status of your computer.

- **On:** The computer is starting up or working.
- **Off:** The computer is off or in hibernation mode.
- **Blinking:** The computer is in sleep mode.

Storage indicator

The storage indicator blinks when a storage drive is under reading or writing.

SD-card slot

The SD-card slot can be empty or installed with a 3-in-1 card reader that supports the following three types of SD card:

- SD card
- SD High Capacity (SDHC™) card
- SD Extended Capacity (SDXC™) card

Headset connector

The headset connector is compatible with:

- Headphones or earphones with a 3.5mm (0.14 inch), TRS (3-pole) plug
- Headsets with a 3.5mm (0.14 inch), CTIA-compliant TRRS (4-pole) plug

Note: This headset connector does not support standalone external microphones with a TRS (3-pole) plug or headsets with an OMTP-compliant TRRS (4-pole) plug.

Related topics

- “Transfer data” on page 11.
- “USB specifications” on page 4.
- Appendix A “Notice for USB connector name update” on page 71

Rear

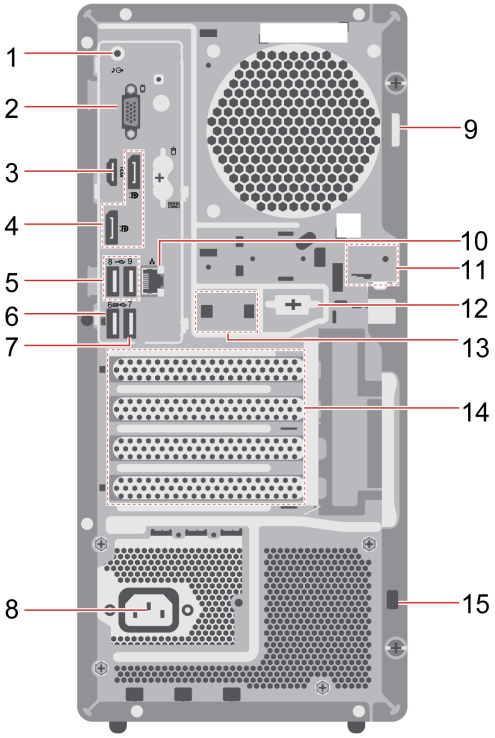

Item	Description	Item	Description
1	Audio line-out connector	2	Flexible I/O port
3	HDMI™ out connector	4	DisplayPort™ out connectors
5	USB-A connectors (Hi-Speed USB)	6	USB-A connector (USB 5Gbps) (with smart power-on feature)
7	USB-A connector (USB 5Gbps)	8	Power cord connector
9	Padlock loop	10	Ethernet connector
11	E-lock slots	12	Optional connector*
13	Smart cable clip slots	14	PCIe card area
15	Security-lock slot		

* for selected models

Flexible I/O port

Depending on the computer model, the flexible I/O port can be one of the following video output connectors:

- DisplayPort out connector*
- HDMI out connector*
- VGA out connector*
- USB-C out connector*

PCIe card area

Install PCIe cards into this area to improve the operating performance of the computer. Depending on the PCIe cards installed, connectors in this area might be Ethernet connectors, video output connectors, or other connectors. If a graphic card is installed into this area, there can be the following video out connectors:

- HDMI out connectors*
- DisplayPort out connectors*
- MiniDisplayPort™ out connectors*
- DVI out connectors*

Related topics

- "Use physical locks" on page 14.
- "Connect to an external display" on page 11.
- "Use physical locks" on page 14
- "USB specifications" on page 4.

USB specifications

Note: Depending on the model, some USB connectors might not be available on your computer.

Connector name	Description
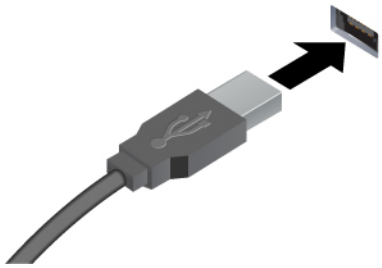 • USB-A connector (Hi-Speed USB) • SS USB-A connector (USB 10Gbps) • 10 USB-A connector (USB 10Gbps)	Connect USB-A compatible devices, such as a USB-A keyboard, USB-A mouse, USB-A storage device, or USB-A printer.
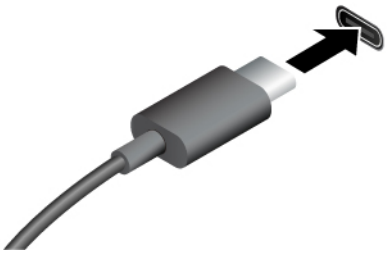 • 20 USB-C connector (USB 20Gbps)	• Charge USB-C compatible devices with the output voltage and current of 5 V and 3 A. • Connect to an external display using the USB-C connector (USB 5 Gbps) on the rear panel: – USB-C to VGA: 1920 x 1200 pixels, 60 Hz – USB-C to DP: 3840 x 2160 pixels, 60 Hz • Connect to USB-C accessories to help expand your computer functionality. To purchase USB-C accessories, go to https://www.lenovo.com/accessories.

Chapter 2. Specifications and expansion

Your computer may come with the specifications and expansion possibilities introduced in this chapter.

Basic specifications

Specification	Description
Dimensions	• Width: 170 mm (7 inches) • Height: 376 mm (15 inches, with feet) • Depth: 315 mm (12 inches)
Weight (without packaging)	Maximum configuration as shipped: 10 kg (22 lb)
Hardware configuration	Type `Device Manager` in the Windows search box and then press Enter. Type the administrator password or provide confirmation, if prompted.
Power supply	• 750-watt automatic voltage-sensing power supply • 500-watt automatic voltage-sensing power supply
Electrical input	• Input voltage: From 100 V ac to 240 V ac • Input frequency: 50/60 Hz
Video features	The integrated graphics card supports the following video output connectors: • Two DisplayPort out connectors • One HDMI out connector • Flexible I/O port* that can be one of the following connectors: – DisplayPort out connector* – HDMI out connector* – VGA out connector* – USB-C out connector* Your computer supports up to two discrete graphics cards, which provide an enhanced video experience and extended capabilities. Depending on the graphics card installed, there can be the following video output connectors: • HDMI out connectors* • DisplayPort out connectors* • MiniDisplayPort out connectors* • DVI out connectors* * for selected models
Network features	• Bluetooth* • Ethernet LAN • Wireless LAN*

* for selected models

Operating environment

Maximum altitude (without pressurization)

© Copyright Lenovo 2025

- Operating: From 0 m (0 ft) to 3048 m (10 000 ft)
- Storage: From 0 m (0 ft) to 12192 m (40 000 ft)

Temperature

- Operating: From 10°C (50°F) to 35°C (95°F)
- Storage: From -40°C (-40°F) to 60°C (140°F)

Relative humidity

- Operating: 20% to 80% (non-condensing)
- Storage: 10% to 90% (non-condensing)

Memory

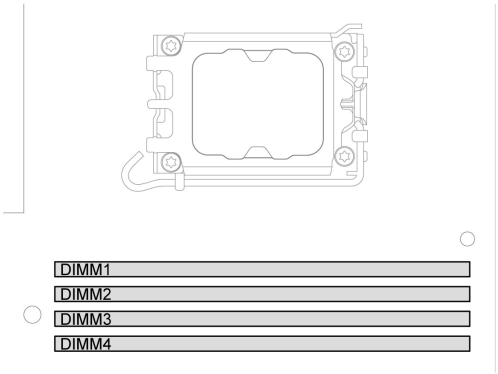

Quantity

1, 2, or 4 memory modules

Capacity and type

Capacity	Type
8 GB, 16 GB, or 32 GB	DDR5-5600 non-ECC UDIMM
16 GB or 32 GB	DDR5-5600 ECC UDIMM

System memory speed

Your computer can come with one of the following types of memory modules and will run up to the following speed:

Memory module capacity	Memory module quantity	Memory module speed
8 GB, 16 GB, or 32 GB	1 or 2	5600 MT/s
8 GB or 16 GB	4	4800 MT/s
32 GB	4	4400 MT/s

To avoid unexpected frequency reduction, ensure that you install memory modules following the replacement steps and rules.

Notes:

- The actual system memory speed of the memory modules varies depending on the microprocessor model. For example, your computer comes with 5600 MT/s memory modules, but the microprocessor only supports up to 4800 MT/s memory modules. Then the system memory speed will be no faster than 4800 MT/s. For microprocessor models supported in your computer, contact the Lenovo Customer Support Center.
- If you install memory modules of different speed, the actual system memory speed will be set to the lowest speed of all the memory modules.

Replacement steps and rules

To install or replace a memory module, see “Memory module” on page 63 for replacement steps and rules.

On-board M.2 SSD

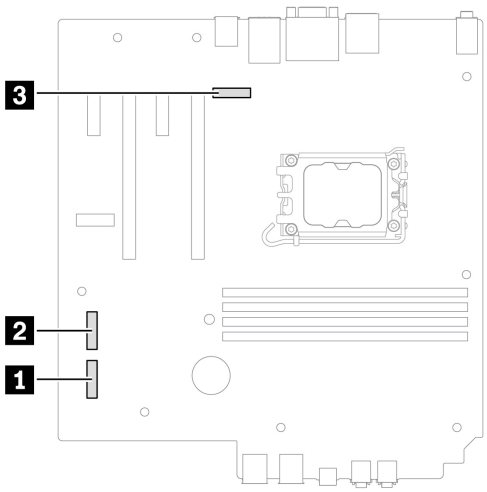

Supported M.2 solid-state drive (SSD)

You can install up to three 2280 Gen 4 M.2 SSD in your computer.

Replacement steps and rules

To install or replace an on-board M.2 SSD, see “On-board M.2 SSD and heat sink” on page 41 for replacement steps and rules.

PCIe card

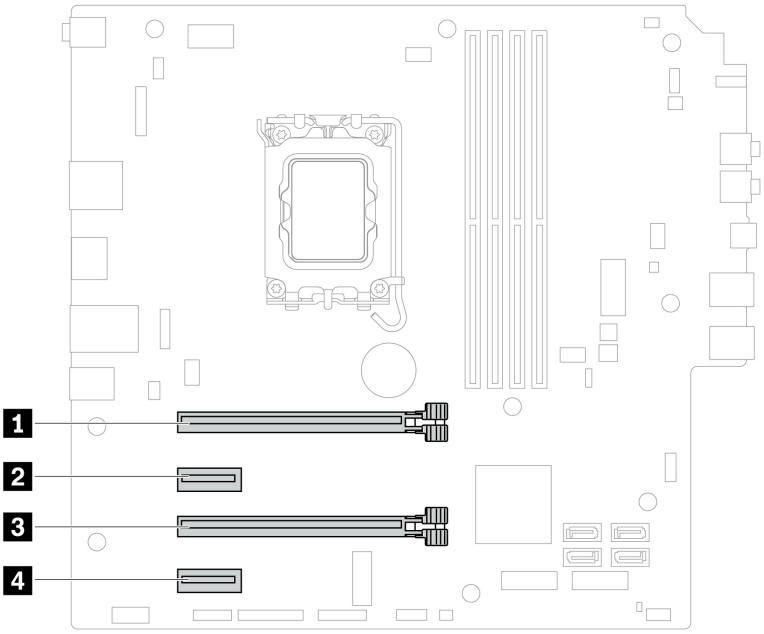

Your computer has four PCIe slots to install PCIe cards such as graphics card, M.2 SSD PCIe adapter card, and other kinds of PCIe adapter card.

Slot	Type
1	PCIe x16 Gen 5 slot
2	PCIe x1 Gen 3 slot
3	PCIe x4 Gen 4 slot (physical link width x16 and negotiable link width x4)
4	PCIe x1 Gen 3 slot

Replacement steps and rules

To install or replace a PCIe card, see “PCIe cards” on page 47 for replacement steps and rules.

SD card

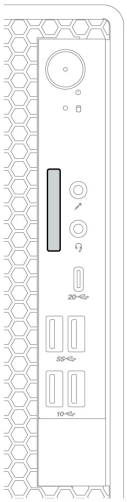

Your computer has an SD-card slot on the front panel. In the SD-card slot, you can install a 3-in-1 card reader that supports one of the following three types of SD card:

- SD card
- SD High Capacity (SDHC™) card
- SD Extended Capacity (SDXC™) card

Storage drive

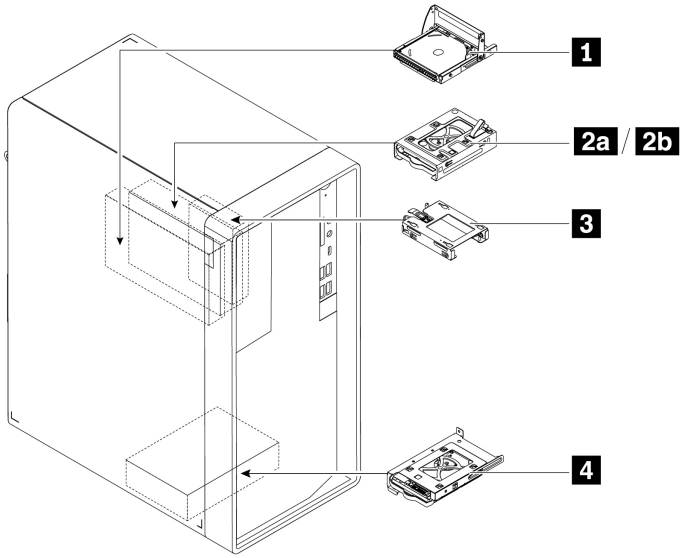

Item	Cages	Supported drives
1	Slim ODD cage*	Slim ODD
2a	Front-access storage enclosure*	3.5-inch HDD

Item	Cages	Supported drives
2b	3.5-inch optional storage drive cage*	3.5-inch HDD
3	2.5-inch optional storage drive cage*	2.5-inch HDD **Note:** 3 can only be used after 2b is populated.
4	Internal storage drive cage	3.5-inch HDD

* for selected models

Priority of storage cages

- For 1, 2a, or 4, there is no required priority order.
- For 1 or zero (empty) 2b, there is no required priority order.
- For 2b, 3 or 4, follow this priority order:

Priority	Storage drive cage
1	4
2	2b
3	3

Replacement steps and rules of devices in the storage bays

To add or replace a device in the storage bays, see “Slim-ODD-relevant parts” on page 29 and “Storage” on page 35 for replacement steps and rules.

Chapter 3. Get started

Connect to an external display

Connect a projector or a monitor to your computer to give presentations or expand your workspace.

Connect to a wired display

The integrated graphics card of your computer supports at least three and up to four video output connectors. When two four-port discrete graphics cards are installed, there can be up to eight video output connectors. Therefore, you can connect your computer to up to 12 wired displays. To connect to a wired display:

1. Connect one end of the display cable or adapter to the HDMI, Mini DisplayPort, DisplayPort, or other video output connectors on your computer.
2. Connect the other end of the cable or adapter to the external display.

Note: When switching the display from a discrete graphics card to the integrated graphics card, press Windows logo key + P to quickly detect the display.

Connect a wireless display

Ensure that both your computer and the wireless display support Miracast®.

1. Press Windows logo key + K.
2. Select the display you want to connect to, and then follow the on-screen instructions.

Change display settings

1. Right-click a blank area on the desktop and select display settings.
2. Select the display that you want to configure and change display settings of your preference.

Transfer data

Quickly share your files using the built-in Bluetooth technology among devices with the same features. You also can install a disc or media card to transfer data.

Connect to a Bluetooth device

You can connect all types of Bluetooth-enabled devices to your computer, such as a keyboard, a mouse, a smartphone, or speakers. To ensure successful connection, place the devices at most 10 meters (33 feet) from the computer.

Conventional pair

This topic helps you connect to a Bluetooth device by conventional pair.

Step 1. Type `Bluetooth` in the Windows search box and then press Enter.

Step 2. Turn on both the Bluetooth on your computer and the Bluetooth device. Make sure the device is discoverable.

Step 3. Select the device when it is displayed on the **Add a device** list, and then follow the on-screen instructions.

Notes: If the Bluetooth connection failed, do the following:

© Copyright Lenovo 2025

1. Type `Device Manager` in the Windows search box and then press Enter.
2. Locate the Bluetooth adapter. Right-click and select **Update driver**.
3. Select **Search automatically for drivers**, and then follow the on-screen instructions.

Use the slim ODD

If your computer has an optical drive, read the following information.

Know the type of your slim ODD

1. Type `Device Manager` in the Windows search box and then press Enter. Type the administrator password or provide confirmation, if prompted.
2. Select an slim ODD, and then follow the on-screen instructions.

Install or remove a disc

1. With the computer on, press the eject button on the slim ODD. The tray slides out of the drive.
2. Insert a disc into the tray or remove a disc from the tray, and then push the tray back into the drive.

Note: If the tray does not slide out of the drive when you press the eject button, turn off the computer. Then, insert a straightened paper clip into the emergency-eject hole adjacent to the eject button. Use the emergency eject only in an emergency.

Record a disc

1. Insert a recordable disc into the slim ODD that supports recording.
2. Do one of the following:
   - Type `AutoPlay` in the Windows search box and then press Enter. Turn on **Use AutoPlay for all media and devices**.
   - Open Windows Media Player.
   - Double-click the ISO file.
3. Follow the on-screen instructions.

Use the SD card

If your computer has an SD-card slot, read the following information.

Install an SD card

1. Locate the SD-card slot.
2. Ensure that the metal contacts on the card are facing the ones in the SD-card slot. Insert the card firmly into the SD-card slot until it is secured in place.

Remove an SD card

Attention: Before removing the card:

1. Click the triangular icon in the Windows notification area to show hidden icons. Right-click the icon prompting you to safely remove hardware and eject media.
2. Select the corresponding item to eject the card from the Windows operating system.
3. Press the card and remove it from your computer. Store the card safely for future use.

Set the power plan

For ENERGY STAR® compliant computers, the following power plan takes effect when your computers have been idle for a specified duration:

- Turn off the display: After 10 minutes
- Put the computer to sleep: After 25 minutes

To awaken the computer from Sleep mode, press any key on your keyboard.

To set the power plan:

1. Type `Power Options` in the Windows search box and then press Enter.
2. Choose or customize a power plan of your preference.

Smart power-on feature (for selected models)

The smart power-on feature helps you start up or wake up the computer from the hibernation mode simply by pressing Alt+P.

Note: Ensure that the keyboard is connected to a USB connector supporting the smart power-on feature.

Enable or disable the smart power-on feature

To enable or disable the smart power-on feature:

Step 1. Restart the computer. When the logo screen is displayed, press F1 or Fn+F1.

Step 2. Select **Power → Smart Power On** and press Enter.

Step 3. Enable or disable the feature as desired.

Step 4. Press F10 or Fn+F10 to save the changes and exit.

The Vantage app

The Vantage app is a customized one-stop solution to help you maintain your computer with automated updates and fixes, configure hardware settings, and get personalized support.

To access the Vantage app, type **Vantage** in the Windows search box.

Notes:

- The available features vary depending on the computer model.
- The Vantage app makes periodic updates of the features to keep improving your experience with your computer. The description of features might be different from that on your actual user interface. You can download the latest version of Vantage app from Microsoft Store.

The Vantage app enables you to:

- Know the device status easily and customize device settings.
- Download and install UEFI BIOS, firmware, and driver to keep your computer up-to-date.
- Monitor your computer health, and secure your computer against outside threats.
- Scan your computer hardware and diagnose hardware problems.
- Look up warranty status (online).

- Access *User Guide* and helpful articles.

Security solutions

Lenovo values your information security. Your computer can be secured by physical locks, software solutions, and BIOS solutions. They can protect your computer from harm, theft, or unauthorized use.

Use physical locks

You can secure your computer and information by the following physical locks.

Padlock

Locking the computer cover through a padlock prevents unauthorized access to the inside of your computer.

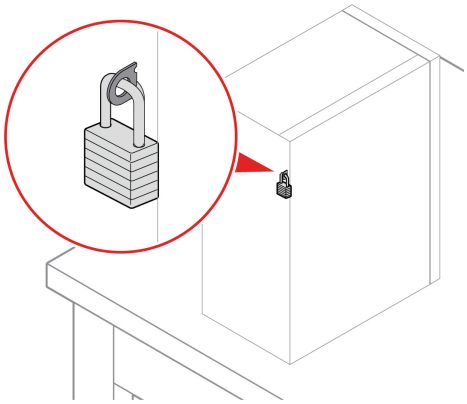

Security lock

Lock your computer to a desk, table, or other fixtures through a security lock.

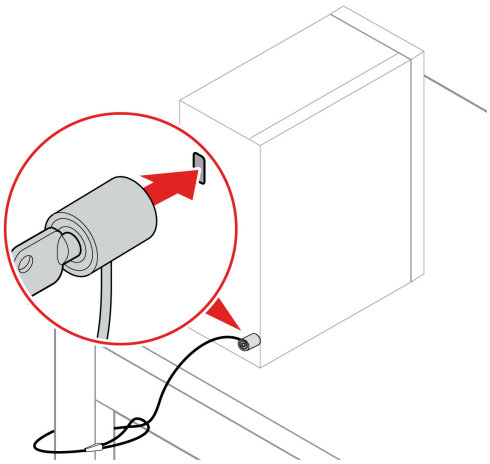

Lock of the front-access storage enclosure

Your computer might have a front-access storage enclosure with lock. The lock prevents any unexpected removal or data loss. The keys are attached at the rear panel of the computer.

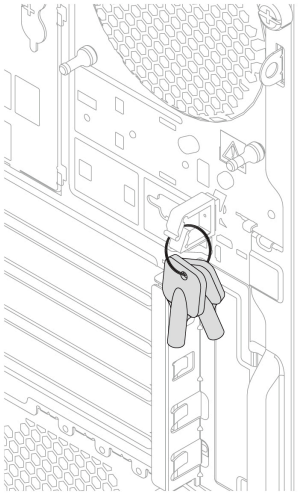

To unlock the front-access storage enclosure to install or replace the storage drive, see Storage drive in the front-access storage enclosure or optional storage drive cage.

E-lock

Your computer might have a security lock solution installed to protect the computer from unauthorized tampering of the internal components. Using the E-Lock, you can mechanically lock or unlock the computer cover.

To enable or disable the E-Lock:

1. Restart the computer. When the logo screen is displayed, press F1 or Fn+F1.
2. Select **Security → Electronic Lock** to enable or disable the E-lock.
3. Press F10 or Fn+F10 to save the changes and exit. Your computer will restart automatically and then changes take effect.

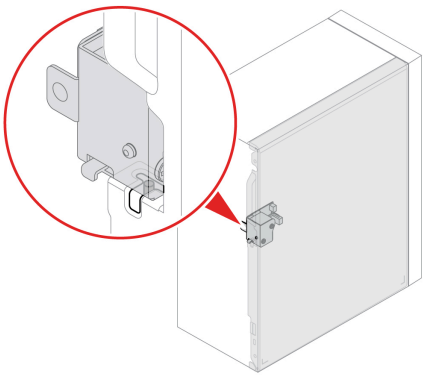

Use software security solutions

The following software solutions help secure your computer and information.

- **Windows Security**

  Windows Security is a software built-in to the operating system. It continually scans for malicious software, viruses, and other security threats. Besides, Windows updates are downloaded automatically to

help keep your computer safe. Windows Security also enables you to manage tools including firewall, account protection, application and browser control, and so on.

- **Antivirus programs**

  Lenovo preinstalls a full-version antivirus software on selected models of computer. It helps defend the computer against viruses, safeguard your identity, and keep your personal information secured.

Note: For more information about how to use these software solutions, refer to their help systems respectively.

Use BIOS security solutions

This section provides BIOS solutions to secure your computer and information.

Wipe the storage drive data (for selected models)

It is recommended that you wipe the storage drive data before recycling the storage drive or the computer.

To wipe the storage drive data:

1. Restart the computer. When the logo screen is displayed, press F1 or Fn+F1.
2. Select **Security → secure wipe → Enabled**.
3. Press F10 or Fn+F10 to save the changes and exit.
4. Restart the computer. When the logo screen is displayed, press F12 or Fn+F12.
5. Select **App Menu → secure wipe** and press Enter.
6. Select the storage drive you will wipe and click **NEXT**.
7. Select the entire storage drive or partition to wipe as desired.
8. Select the method as desired and click **NEXT**.
9. Click **Yes** to confirm your option when the prompting window is displayed.
10. If you have set a hard disk password for the storage drive, enter the password. Otherwise, set a temporary password following the on-screen instructions. Then, click **NEXT**. The wiping process begins.

    Note: Duration of the wiping process varies depending on the storage drive capacity.
11. Click **Reboot** when you are prompted to reset the system, and then one of the following will happen:
    - If the system storage drive data is wiped, you will be prompted that no operating system is found.
    - If the non-system storage drive data is wiped, the computer restarts automatically.

Cover presence switch

The cover presence switch prevents the computer from logging in to the operating system when the computer cover is not properly installed or closed.

To enable or disable the cover presence switch on the system board:

1. Restart the computer. When the logo screen is displayed, press F1 or Fn+F1.
2. Select **Security → Cover Tamper Detected** and press Enter.
3. Select **Enabled** or **Disabled** and press Enter.
4. Press F10 or Fn+F10 to save the changes and exit.

If the cover presence switch is enabled and the computer cover is not correctly installed or closed, an error message will be displayed when you turn on the computer. To bypass the error message and log in to the operating system:

1. Properly install or close the computer cover.
2. Enter the BIOS menu, save and then exit.

Intel BIOS guard

The Intel® BIOS Guard module cryptographically verifies all BIOS updates. This hardware-based security helps prevent software and malware attacks on the computers BIOS.

Smart USB Protection

The Smart USB Protection function is a security function that helps prevent data from being copied from the computer to USB storage devices connected to the computer. You can set the Smart USB Protection function to one of the following modes:

- **Disabled** (default setting): You can use the USB storage devices without limitation.
- **Read Only**: You cannot copy data from the computer to the USB storage devices. However, you can access data on the USB storage devices.
- **No Access**: You cannot access the USB storage devices from the computer.

To configure the Smart USB Protection function:

1. Restart the computer. When the logo screen is displayed, press F1 or Fn+F1.
2. Select **Security → Smart USB Protection** and press Enter.
3. Select the desired setting and press Enter.
4. Press F10 or Fn+F10 to save the changes and exit.

Absolute Persistence (for computers purchased outside mainland China)

Absolute Persistence technology is embedded in BIOS. It detects changes that happen on the hardware, software, or the call-in location. It keeps you always knowing what condition the computer is in. To activate the technology, you have to purchase a subscription to Absolute.

UEFI BIOS passwords

You can set passwords in UEFI (Unified Extensible Firmware Interface) BIOS (Basic Input/Output System) to strengthen the security of your computer.

Password types

You can set a power-on password, supervisor password, system management password, or hard disk password in UEFI BIOS to prevent unauthorized access to your computer. However, you are not prompted to enter any UEFI BIOS password when your computer resumes from sleep mode.

- Power-on password

  When a power-on password is set, you are prompted to enter a valid password each time the computer is turned on.

- Supervisor password

  Setting a supervisor password deters unauthorized users from changing configuration settings. If you are responsible for maintaining the configuration settings of several computers, you might want to set a supervisor password.

  When a supervisor password is set, you are prompted to enter a valid password each time you try to enter the BIOS menu.

  If both the power-on password and supervisor password are set, you can enter either password. However, you must use your supervisor password to change any configuration settings.

- Hard disk password

Setting a hard disk password prevents unauthorized access to the data on the storage drive. When a hard disk password is set, you are prompted to enter a valid password each time you try to access the storage drive.

Note: After you set a hard disk password, your data on the storage drive is protected even if the storage drive is removed from one computer and installed in another.

- System management password (for selected models)

  You can enable the system management password to have the same authority as the supervisor password to control security related features. To customize the authority of the system management password through the UEFI BIOS menu:

  1. Restart the computer. When the logo screen is displayed, press F1 or Fn+F1.
  2. Select **Security → System Management Password Access Control**.
  3. Follow the on-screen instructions.

  If you have set both the supervisor password and the system management password, the supervisor password overrides the system management password.

Set, change, and remove a password

Before you start, print these instructions.

1. Restart the computer. When the logo screen is displayed, press F1 or Fn+F1.
2. Select **Security**.
3. Depending on the password type, select **Set Supervisor Password**, **Set Power-On Password**, **Set System Management Password**, or **Hard Disk Password** and press Enter.
4. Follow the on-screen instructions to set, change, or remove a password.
5. Press F10 or Fn+F10 to save the changes and exit.

You should record your passwords and store them in a safe place. If you forget the passwords, contact a Lenovo-authorized service provider.

Note: If the hard disk password is forgotten, Lenovo cannot remove the password or recover data from the storage drive.

Chapter 4. Explore your computer

Lenovo AI Now or Lenovo Xiaotian (for selected models)

Lenovo AI Now or Lenovo Xiaotian is a personal and private AI assistant to help with inspiration, writing, summarizing, and quick settings for your computer. Depending on the country or region, either of them might be available.

Access the apps

- Use the Lenovo AI Now icon or Lenovo Xiaotian icon if present on the taskbar.
- Or type the app name in the Windows search box and press Enter.

Explore key features

- Import files to create your personal knowledge base and start searching, Q&A, summarization, and generation based on it.
- Set up your computer or find service information. For example, you can ask it to help turn on the Eye Care mode or find the nearest service center.

Notes:

- For more information about Lenovo AI Now or Lenovo Xiaotian, see the User Guide in the apps' Help Center.
- Software features may vary by computer model and be subject to change. Explore the apps based on your actual user interface.

UEFI BIOS

UEFI BIOS is the first program that the computer runs. When the computer turns on, the UEFI BIOS performs a self test to make sure that various devices in the computer are functioning properly.

Enter the UEFI BIOS menu

Turn on or restart the computer. When the logo screen is displayed, press F1 or Fn+F1 to enter the UEFI BIOS menu.

Note: If you have set UEFI BIOS passwords, enter the correct passwords when prompted. You also can select **No** or press Esc to skip the password prompt and enter the UEFI BIOS menu. However, you cannot change the system configurations that are protected by passwords.

Navigate the UEFI BIOS menu

Follow the on-screen instructions to navigate in the UEFI BIOS menu.

The table below introduces the available settings of the UEFI BIOS menu. You can follow the on-screen instruction to navigate in the UEFI BIOS menu.

Note: The UEFI BIOS menu might vary depending on system configurations.

© Copyright Lenovo 2025

Menu	Introduction
Main	This category provides the general product-related and firmware information including system summary, machine type, product serial number, UUID number, etc.
Devices	This category introduces how to configure various devices such as USB ports and audio controllers.
Advanced	This category provides advanced information about the computer such as the CPU features.
Power	This category introduces power and thermal management solutions.
Security	This category introduces various passwords, locks, and software to protect your computer.
Startup	This category introduces how to set the boot priority order.
Exit	This category introduces how to exit as you prefer.

You can go to Lenovo BIOS Simulator Center https://download.lenovo.com/bsco/index.html to explore the detailed settings by your product name.

Note: The Lenovo BIOS Simulator Center makes periodic updates of the settings. The UEFI BIOS simulator interface and description of settings might be different from that on your actual user interface.

Update the UEFI BIOS

When you install a new program, device driver, or hardware component, you might need to update the UEFI BIOS.

Download and install the latest UEFI BIOS update package by one of the following methods:

From the Vantage app

Follow the instructions to update the UEFI BIOS from the Vantage app.

Step 1. Open the Vantage app, and then click **Device → System Update**.

Step 2. If the latest UEFI BIOS update package is available, follow the on-screen instructions to download and install the package.

From the Lenovo Support Web site

Follow the instructions to update the UEFI BIOS from the Lenovo Support Web site.

Step 1. Go to https://pcsupport.lenovo.com and select the entry for your computer.

Step 2. Click **Drivers & Software → Manual Update → BIOS/UEFI**.

Step 3. Follow the on-screen instructions to download and install the latest UEFI BIOS update package.

From the Windows Update

Follow the instructions to update the UEFI BIOS from the Windows Update.

Step 1. Type **Settings** in the Windows search box and press Enter.

Step 2. Click **Windows Update → Check for Updates**.

Step 3. If a BIOS update package appears in your update list, click **Download or Install** to initiate the update.

Remote update via Windows Remote Desktop

Prerequisite: Before proceeding, ensure the target computer has a display connected. If not, attach one to perform a local UEFI BIOS update using the latest version from Lenovo Support Web site. Once completed, subsequent UEFI BIOS updates can be performed remotely without a display.

Step 1. Establish a Remote Desktop Protocol (RDP) connection to the target computer.

Step 2. Through the RDP interface, remotely update the UEFI BIOS using one of these methods.

- "From the Vantage app" on page 20
- "From the Lenovo Support Web site" on page 20
- "From the Windows Update" on page 20

Step 3. After installation, the system will automatically reboot multiple times (around 20 minutes). The remote connection will terminate during reboots — reconnect after the final reboot to verify successful update.

RAID

What is RAID

Redundant Array of Independent Disks (RAID) is a technology that provides increased storage functions and reliability through redundancy. It also can improve data storage reliability and fault tolerance compared with single-drive storage systems. Data loss resulting from a drive failure can be prevented by reconstructing missing data from the remaining drives.

When a group of independent physical storage drives is set up to use RAID technology, they are in a RAID array. This array distributes data across multiple storage drives, but the array appears to the host computer as one single storage unit. Creating and using RAID arrays provides high performance, such as the expedited I/O performance, because several drives can be accessed simultaneously.

Configure RAID with Intel RST configuration utility

Your computer comes with the Intel RST configuration utility. You can follow the sections below to configure RAID with Intel RST configuration utility.

Storage drive requirements for RAID levels

Your computer must have the minimum number of SATA or NVMe storage drives installed for the supported level of RAID below:

- RAID 0: striped disk array
  - Consists of at least two SATA or NVMe storage drives
  - Supported strip size: 4 KB, 8 KB, 16 KB, 32 KB, 64 KB, or 128 KB
  - Better performance without fault tolerance
- RAID 1: mirrored disk array
  - Consists of two SATA or NVMe storage drives
  - Improved reading performance and 100% redundancy
- RAID 5: block-level striped disk array with distributed parity
  - Consists of at least three NVMe storage drives
  - Supported strip size: 16 KB, 32 KB, 64 KB, or 128 KB

– Better performance and fault tolerance

Enable the SATA RAID functionality

To enable SATA RAID functionality:

1. Restart the computer. When the logo screen is displayed, press F1 or Fn+F1.
2. Select **Devices → Storage Setup** and press Enter.
3. Select **Configure Storage as** and press Enter.
4. Select **RAID** and press Enter.
5. Press F10 or Fn+F10 to save the changes and exit.

Create RAID volumes

Attention: All the existing data stored on the selected drives will be erased while the RAID volume is being created.

To create RAID volumes:

1. Restart the computer. When the logo screen is displayed, press F1 or Fn+F1.
2. Select **Devices → Storage Setup** and press Enter.
3. Select **Intel (R) Rapid Storage Technology** and press Enter.
4. Select **Create RAID Volume** and press Enter.
5. Select **Name** and press Enter. When prompted, type a proper RAID Volume name in the field.
6. Select **RAID Level** and press Enter. When prompted, select a RAID level in the field.
7. Use the arrow keys and the space key to mark individual physical storage drives to be added in the RAID volume.
8. Select **Strip Size** and press Enter. When prompted, select a strip size in the field.
9. Select **Capacity** and type a volume size in the field.
10. Select **Create Volume** and press Enter to initiate volume creation.

Delete RAID volumes

Attention: All the existing data stored on the selected drives will be erased after you delete RAID volumes.

To delete RAID volumes:

1. Restart the computer. When the logo screen is displayed, press F1 or Fn+F1.
2. Select **Devices → Storage Setup** and press Enter.
3. Select **Intel (R) Rapid Storage Technology** and press Enter.
4. Select the RAID volume to be deleted and press Enter.
5. Select **Delete** and press Enter.
6. Select **Yes** to confirm the deletion of the selected RAID volume. Deleting a RAID volume will reset the storage drives to non-RAID.

Reset storage drives to non-RAID

To reset your storage drives to non-RAID:

1. Restart the computer. When the logo screen is displayed, press F1 or Fn+F1.
2. Select **Devices → Storage Setup** and press Enter.
3. Select **Intel (R) Rapid Storage Technology** and press Enter.

4. Select the RAID volumes and press Enter to view the detailed information. Select the storage drives you want to reset to non-RAID and then press Enter.
5. Select **Reset to Non-RAID** and press Enter.
6. Select **Yes** to reset the storage drives to non-RAID.

Chapter 5. CRU replacement

Learn about how to remove or install the hardware components in your computer.

Before CRU replacement

Before replacing hardware of your computer, read this section first. You will get to know what is CRU, the CRU list, system board connectors, and prerequisites for CRU replacement.

What is CRU

Customer Replaceable Units (CRUs) are parts that can be replaced by the customer. Lenovo computers contain the following types of CRUs:

- **Self-service CRUs:** Refer to parts that can be replaced easily by customer themselves or by trained service technicians at an additional cost.
- **Optional-service CRUs:** Refer to parts that can be replaced by customers with a greater skill level. Trained service technicians can also provide service to replace the parts under the type of warranty designated for the customer's machine.

If you intend on installing the CRU, Lenovo will ship the CRU to you. CRU information and replacement instructions are shipped with your product and are available from Lenovo at any time upon request. You might be required to return the defective part that is replaced by the CRU. When return is required: (1) return instructions, a prepaid shipping label, and a container will be included with the replacement CRU; and (2) you might be charged for the replacement CRU if Lenovo does not receive the defective CRU within thirty (30) days of your receipt of the replacement CRU. For full details, see the Lenovo Limited Warranty documentation at:
https://www.lenovo.com/warranty/llw_02

CRU list

The following is the CRU list of your computer.

© Copyright Lenovo 2025

Exploded view

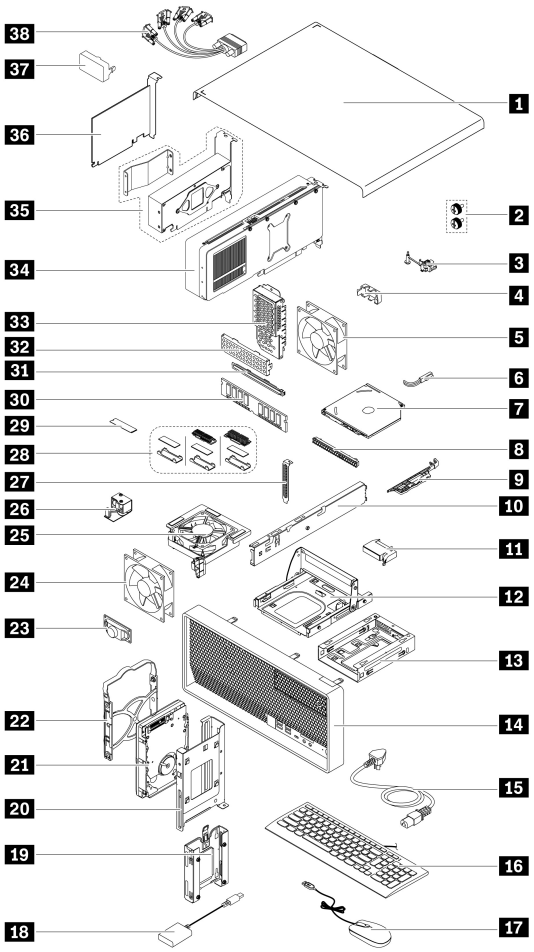

Part list

Self-service CRUs:

- 1 Side cover
- 2 Screws
- 4 Smart cable clip*
- 6 Slim-ODD cable*
- 7 Slim ODD*
- 8 Slim-ODD bezel*
- 9 Slim-ODD latch*
- 10 Chassis beam
- 11 Graphics card holder*
- 12 Slim-ODD cage*
- 13 3.5-inch optional storage drive cage* or front-access storage enclosure*
- 14 Front bezel
- 15 Power cord
- 16 Keyboard*
- 17 Mouse*
- 18 Dongle*
- 19 2.5-inch HDD cage*
- 20 3.5-inch internal storage drive cage
- 21 3.5-inch HDD*
- 22 3.5-inch storage drive tray*
- 27 PCIe card bracket*
- 28 On-board M.2 SSD bracket, heat sink, and thermal pad*
- 29 M.2 SSD*
- 30 Memory module
- 31 ODD EMI shielding*
- 32 HDD EMI shielding*
- 33 Graphics card bracket*
- 37 Rear Wi-Fi antenna cover
- 38 4-serial cable*

Optional-service CRUs:

- 3 On-board M.2 SSD holder*
- 5 Rear fan
- 23 Internal speaker
- 24 Front fan
- 25 Side fan with bracket*
- 26 E-lock*
- 34 Graphics card*
- 35 Graphics card and extender*
- 36 PCIe adapter card*

* for selected models

System board illustration

Note: The system board might look slightly different from the illustration.

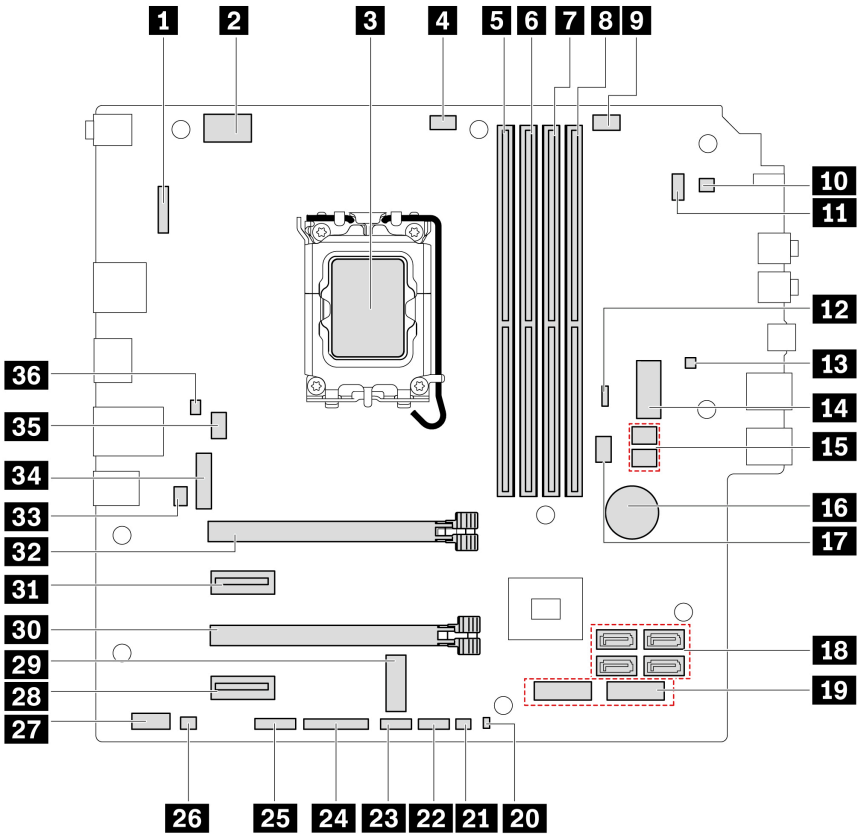

Item	Item
1 Flexible I/O port card connector	2 8-pin CPU power connector
3 CPU socket	4 CPU fan connector
5 Memory slot (DIMM1)	6 Memory slot (DIMM2)
7 Memory slot (DIMM3)	8 Memory slot (DIMM4)
9 Auxiliary fan connector 2 (side fan)	10 Internal speaker connector
11 Front panel connector	12 Clear CMOS (Complementary Metal Oxide Semiconductor)/Recovery jumper
13 Logo LED connector	14 10-pin system board power connector
15 SATA power connectors	16 Coin-cell battery
17 Auxiliary fan connector 1 (front fan)	18 SATA connectors
19 M.2 solid-state drive slots (Gen 4)	20 Management engine (ME) disabling connector
21 Thermal sensor connector	22 Front USB connector 1
23 Front USB connector 2	24 Line printer terminal (LPT) header
25 Serial (COM) connector	26 Thunderbolt™ connector 2
27 Thunderbolt™ connector 1	28 PCIe x1 Gen 3 slot 4

Item	Item
29 Wi-Fi card slot	30 PCIe x4 Gen 4 slot (physical link width x16 and negotiable link width x4)
31 PCIe x1 Gen 3 slot	32 PCIe x16 Gen 5 slot
33 E-lock connector	34 M.2 solid-state drive slot (Gen 5)
35 System fan connector (rear fan)	36 Cover presence switch connector

Prerequisites for hardware replacement

General prerequisites

Read *Generic Safety and Compliance Notices*.

Prerequisites for opening left side cover of the computer

-

  During operation, some components become hot enough to burn the skin. Before you open the computer cover, remove any media from the drives, turn off the computer and connected devices, disconnect power, remove all cables and locking devices, and wait approximately 10 minutes until the computer is cool.
- Unlock any locking device that secures the computer.
- Lay down the computer to place the left side cover facing up.
- Before reaching parts with cables, record the cable routing for future reference and then disconnect its cable from the system board.

Prerequisites for replacing storage drives

Attention: The internal storage drives are sensitive. Inappropriate handling might cause damage and loss of data. When handling the internal storage drives observe the following guidelines:

- Replace the internal storage drives only for repair. The internal storage drive is not designed for frequent changes or replacement.
- Before replacing the internal storage drives, make backup copy of all the data that you want to keep and safely eject the old storage drives from the operating system. For more information, see the operating system help system.
- Do not touch the contact edge of the internal storage drives. Otherwise, the internal storage drives might get damaged.
- Do not apply pressure to the internal storage drives.
- Do not make the internal storage drives subject to physical shocks or vibration. Put the internal storage drives on soft material, such as a cloth, to absorb physical shocks.

Prerequisites for replacing hot-swappable storage drives in the front-access storage enclosure

The storage drive in the front-access storage enclosure can be hot-swappable when certain requirements are met. It means that you can open the front-access storage enclosure bezel to install or replace the drive inside without even turning off your computer. Therefore, lock the enclosure cover to prevent any unexpected removal or data loss. The keys are attached at the rear panel of the computer. Store the keys in a secure place.

Attention: The storage drive in the front-access storage enclosure is hot-swappable only when the following requirements are met. If any of the requirements are not met, do not install or replace the storage drive when the computer is turned on. Otherwise, data on the storage drive might get damaged.

- The eSATA mode of the SATA 4 connector is enabled in BIOS by doing the following:
  1. Restart the computer. When the logo screen is displayed, press F1 or Fn+F1.
  2. Select **Devices → Storage Setup → SATA Drive 4 Hot-Plug Support** and press Enter.
  3. Select **Enabled** and press Enter.
  4. Press F10 or Fn+F10 to save the changes and exit.
- The SATA cable of the front-access storage enclosure is connected to the SATA 4 connector on the system board.
- The operating system of your computer does not reside on the storage drive in the front-access storage enclosure.

Prerequisites for replacing power supply assembly

Although there are no moving parts in the computer after the power cord has been disconnected, the following warnings are required for your safety.

Keep fingers and other parts of your body away from hazardous, moving parts. If you suffer an injury, seek medical care immediately. Never remove the cover on a power supply or any part that has the following label attached.

Hazardous voltage, current, and energy levels are present inside any component that has this label attached. There are no serviceable parts inside these components. If you suspect a problem with one of these parts, contact a service technician.

Side cover

Prerequisite

Before you start, ensure that you have read the relevant sections in Prerequisites for hardware replacement, which includes:

- General prerequisites
- Prerequisites for opening left side cover of the computer
- Prerequisites for replacing storage drives
- Prerequisites for replacing hot-swappable storage drives in the front-access storage enclosure
- Prerequisites for replacing power supply assembly

Removal steps

Loosen the screws and then remove the side cover.

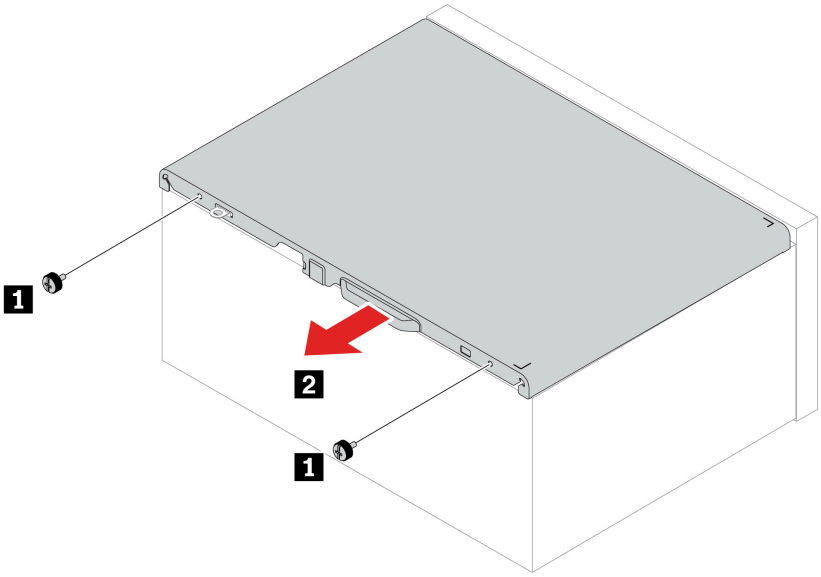

Step	Screw (quantity)	Torque
1	#6-32 × 7.5 mm (0.3 inches), Nickel coated (2)	0.34 ± 0.06 Nm (3.46 ± 0.58 kgf-cm)

Notes:

- If a locking device is available, use it to lock the computer after installing the computer cover.
- Depending on your computer model, some of the hardware parts in the replacing section might not be available.

Slim-ODD-relevant parts

By reading this section, you will learn to replace optical-drive relevant parts, including optical drive, optical drive latch, and optical drive bezel, bracket, and cage.

Slim ODD

Prerequisite

Before you start, ensure that you have read the relevant sections in Prerequisites for hardware replacement, which includes:

- General prerequisites
- Prerequisites for opening left side cover of the computer
- Prerequisites for replacing storage drives
- Prerequisites for replacing hot-swappable storage drives in the front-access storage enclosure
- Prerequisites for replacing power supply assembly

Removal steps

1. Remove the “Side cover” on page 28.
2. Disconnect the signal and power cable from the slim ODD.
3. Remove the slim ODD.

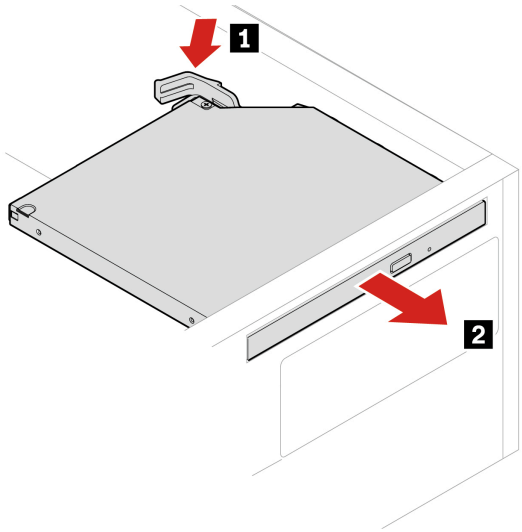

Slim-ODD latch

Prerequisite

Before you start, ensure that you have read the relevant sections in Prerequisites for hardware replacement, which includes:

- General prerequisites
- Prerequisites for opening left side cover of the computer
- Prerequisites for replacing storage drives
- Prerequisites for replacing hot-swappable storage drives in the front-access storage enclosure
- Prerequisites for replacing power supply assembly

Removal steps

1. Remove the following parts:
   a. “Side cover” on page 28
   b. “Slim ODD” on page 29
2. Remove the slim-ODD latch.

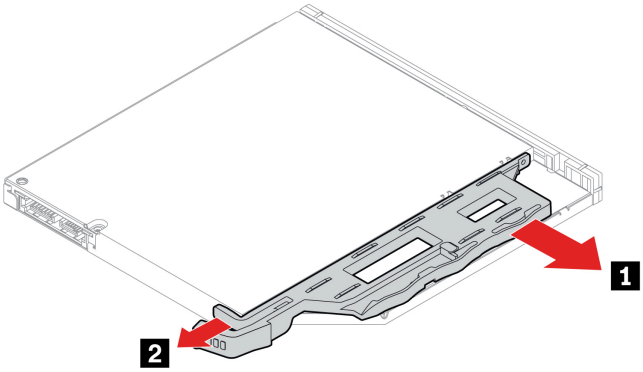

Installation steps

There are three holes on the slim ODD to locate the slim-ODD latch. Install the latch to the slim ODD and make sure that it is inserted into these holes.

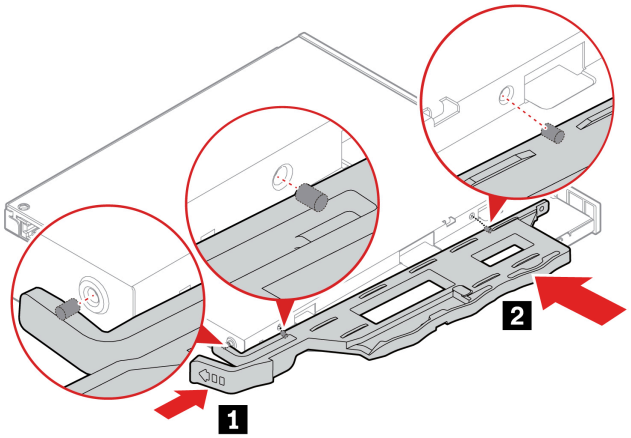

Slim-ODD bezel

Prerequisite

Before you start, ensure that you have read the relevant sections in Prerequisites for hardware replacement, which includes:

- General prerequisites
- Prerequisites for opening left side cover of the computer
- Prerequisites for replacing storage drives
- Prerequisites for replacing hot-swappable storage drives in the front-access storage enclosure
- Prerequisites for replacing power supply assembly

Removal steps

1. Remove the following parts:
   a. “Side cover” on page 28.
   b. “Slim ODD” on page 29.
2. Remove the slim-ODD bezel from the slim ODD.

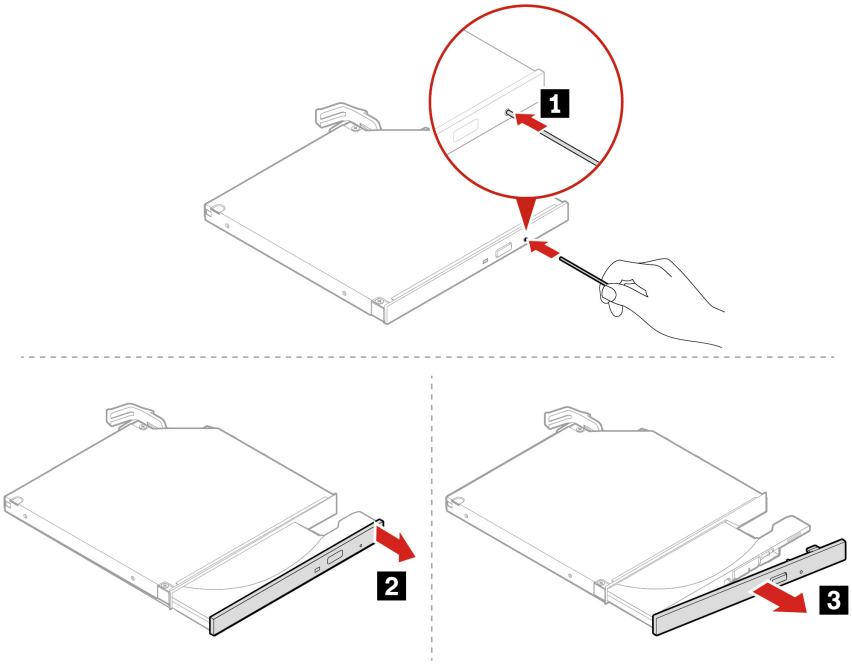

Installation steps

There are four holes on the optical drive tray to locate the optical drive bezel.

1. Install the slim-ODD bezel to the optical drive tray, and make sure that it is inserted into these holes.
2. Install the slim-ODD tray back to the slim ODD.

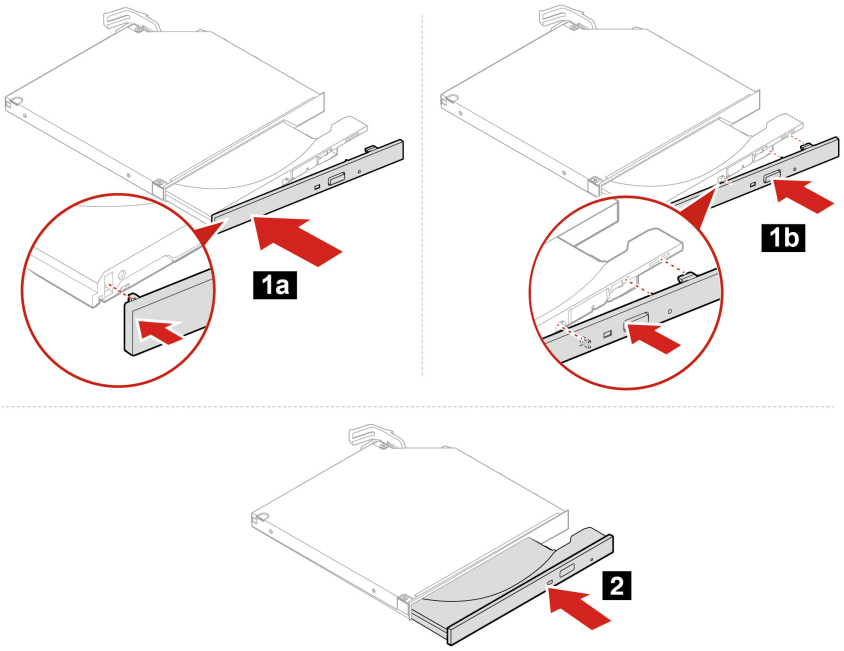

Slim-ODD cage

Prerequisite

Before you start, ensure that you have read the relevant sections in Prerequisites for hardware replacement, which includes:

- General prerequisites
- Prerequisites for opening left side cover of the computer
- Prerequisites for replacing storage drives
- Prerequisites for replacing hot-swappable storage drives in the front-access storage enclosure
- Prerequisites for replacing power supply assembly

Removal steps

1. Remove the following parts:
   a. “Side cover” on page 28
   b. “Slim ODD” on page 29
2. Remove the slim-ODD cage.

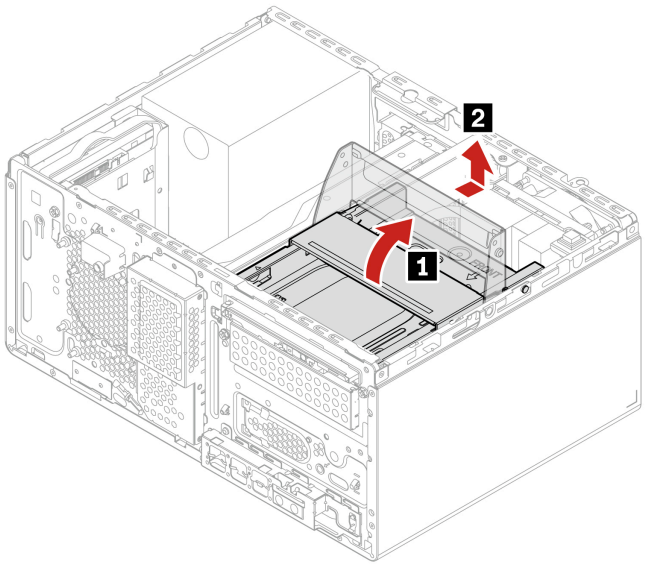

Installation steps

There are four mounting holes on the chassis to locate the optical drive cage.

1. Align the optical drive cage with the mounting holes on the chassis.
2. Pivot the handle inward to secure the cage in place.

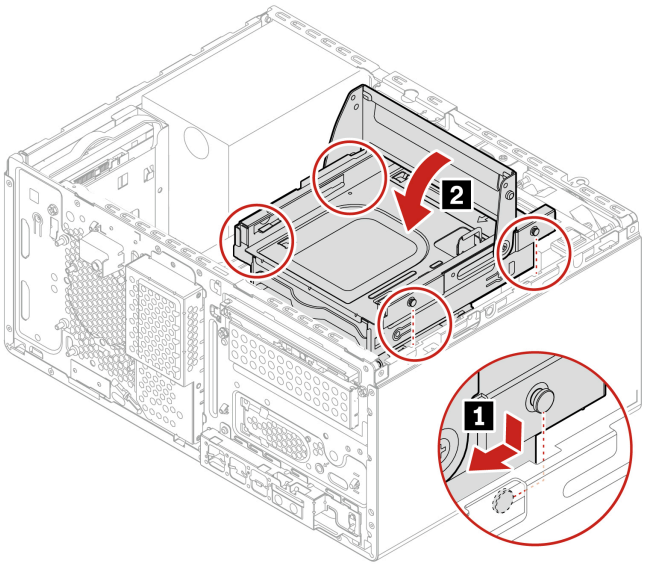

Front bezel

Prerequisite

Before you start, ensure that you have read the relevant sections in Prerequisites for hardware replacement, which includes:

- General prerequisites
- Prerequisites for opening left side cover of the computer
- Prerequisites for replacing storage drives
- Prerequisites for replacing hot-swappable storage drives in the front-access storage enclosure
- Prerequisites for replacing power supply assembly

Removal steps

1. Remove the following parts, if any:
   a. “Side cover” on page 28
   b. “Slim-ODD-relevant parts” on page 29
   c. “Storage drive in the front-access storage enclosure or optional storage drive cage” on page 37
   d. “Front-access storage enclosure or 3.5-inch optional storage drive cage” on page 39
2. Release three elastic hooks from the top of the front bezel.

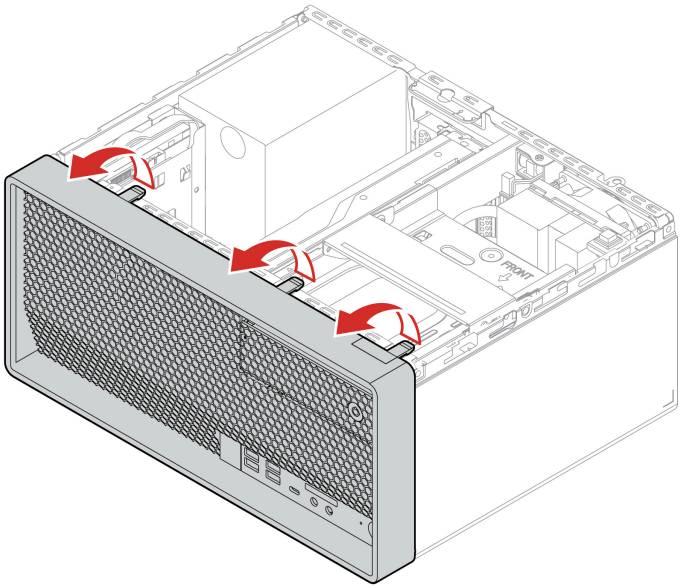

Installation steps

There are three swivel hooks at the bottom of the front bezel. and there are three hook slots at the bottom of the front panel.

1. Insert the three swivel hooks to each hook slot.
2. Pivot the front bezel inwards to install it to the chassis.

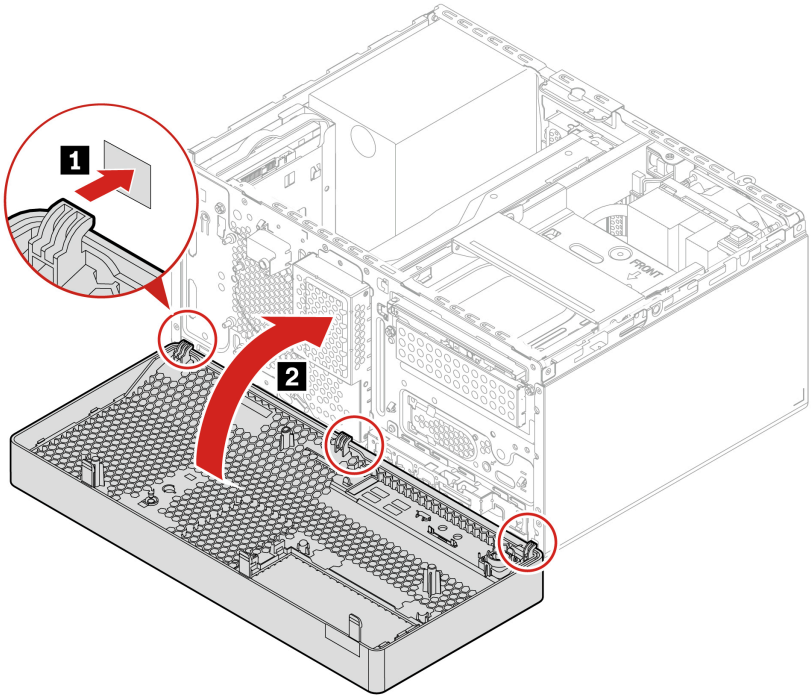

Storage

By reading this section, you will learn to replace storage drives, storage drive cages, and front-access storage enclosure in your computer.

3.5-inch internal storage drive

Prerequisite

Before you start, ensure that you have read the relevant sections in Prerequisites for hardware replacement, which includes:

- General prerequisites
- Prerequisites for opening left side cover of the computer
- Prerequisites for replacing storage drives
- Prerequisites for replacing hot-swappable storage drives in the front-access storage enclosure
- Prerequisites for replacing power supply assembly

Removal steps of the 3.5-inch HDD and bracket

1. Remove the “Side cover” on page 28.
2. Disconnect the signal cable and the power cable from the 3.5-inch HDD.
3. Remove the 3.5-inch HDD with bracket from the storage drive cage.

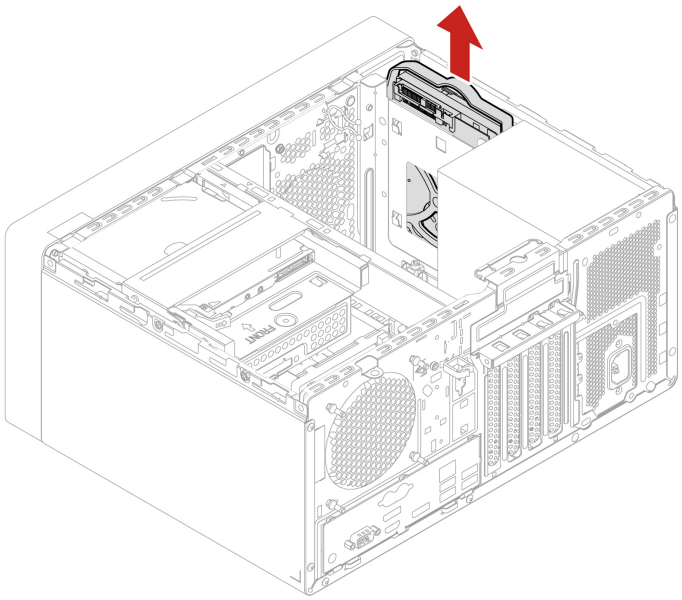

4. Remove the 3.5-inch HDD from the bracket.

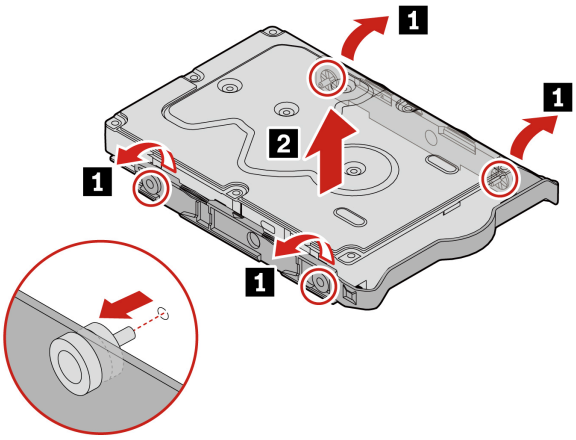

3.5-inch internal storage drive cage

Prerequisite

Before you start, ensure that you have read the relevant sections in Prerequisites for hardware replacement, which includes:

- General prerequisites
- Prerequisites for opening left side cover of the computer
- Prerequisites for replacing storage drives
- Prerequisites for replacing hot-swappable storage drives in the front-access storage enclosure
- Prerequisites for replacing power supply assembly

Removal steps

1. Remove the following parts, if any:
   a. “Side cover” on page 28
   b. “Front bezel” on page 34
   c. “3.5-inch internal storage drive” on page 36
2. Remove the 3.5-inch internal storage drive cage.

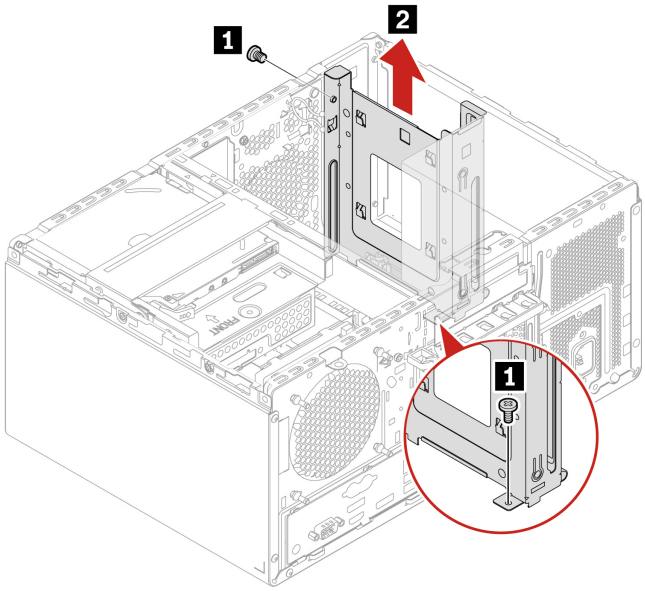

Step	Screw (quantity)	Torque
1	#6-32 × 5 mm (0.2 inches), Nickel coated (2)	0.56 ± 0.05 Nm (5.75 ± 0.57 kgf-cm)

Storage drive in the front-access storage enclosure or optional storage drive cage

Prerequisite

Before you start, ensure that you have read the relevant sections in Prerequisites for hardware replacement, which includes:

- General prerequisites
- Prerequisites for opening left side cover of the computer
- Prerequisites for replacing storage drives
- Prerequisites for replacing hot-swappable storage drives in the front-access storage enclosure
- Prerequisites for replacing power supply assembly

Removal steps of the 3.5-inch hard disk drive

1. Find the key to the front-access storage enclosure attached at the rear panel of the computer.

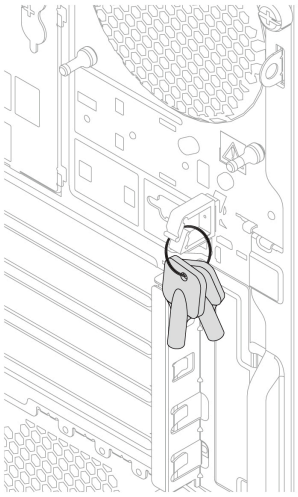

2. Open the front-access storage enclosure bezel.

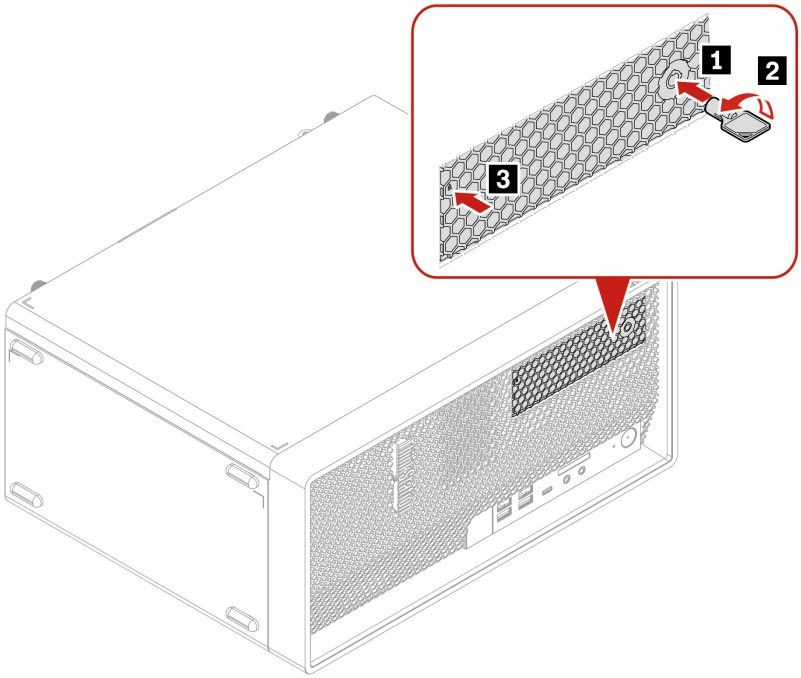

3. Pull the 3.5-inch HDD with bracket out of the front-access storage enclosure.

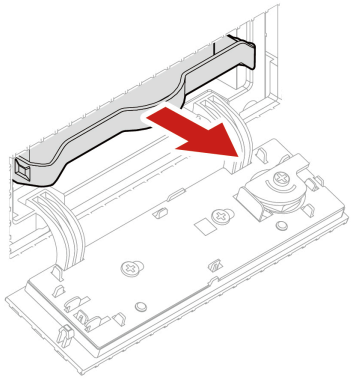

4. Remove the 3.5-inch HDD from the bracket.

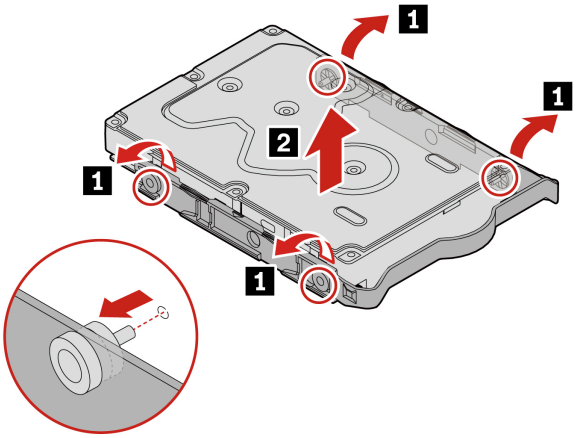

Front-access storage enclosure or 3.5-inch optional storage drive cage

Prerequisite

Before you start, ensure that you have read the relevant sections in Prerequisites for hardware replacement, which includes:

- General prerequisites
- Prerequisites for opening left side cover of the computer
- Prerequisites for replacing storage drives
- Prerequisites for replacing hot-swappable storage drives in the front-access storage enclosure
- Prerequisites for replacing power supply assembly

Removal steps

1. Remove the following parts, if any:
   a. “Side cover” on page 28
   b. “Slim ODD” on page 29
   c. “Storage drive in the front-access storage enclosure or optional storage drive cage” on page 37
   d. “Front bezel” on page 34
2. The 3.5-inch storage drive cage attaches below the optical drive cage. Pull the handle up to remove both simultaneously.

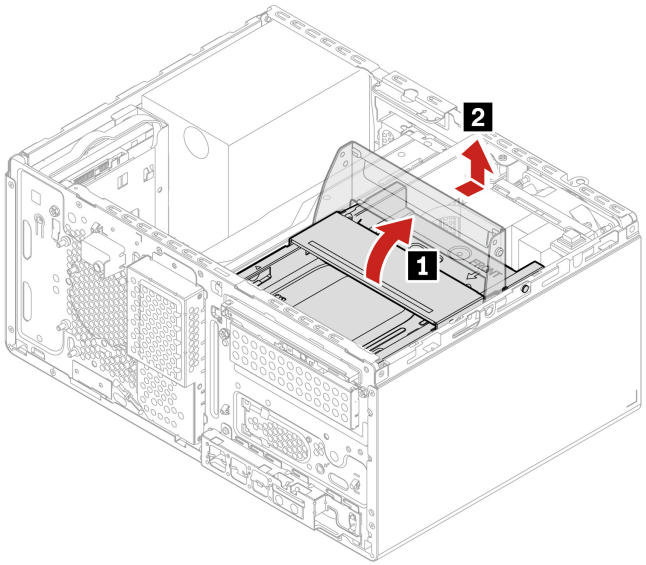

3. Remove screw 1, then release the four locking clips securing the optional 3.5-inch storage drive cage from the slim-ODD cage.

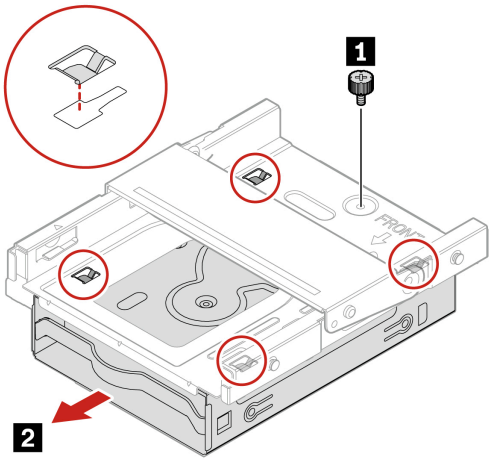

Step	Screw (quantity)	Torque
1	#6-32 × 7.5 mm (0.3 inches), Nickel coated (1)	0.56 ± 0.05 Nm (5.75 ± 0.57 kgf-cm)

2.5-inch optional storage drive cage

Prerequisite

Before you start, ensure that you have read the relevant sections in Prerequisites for hardware replacement, which includes:

- General prerequisites
- Prerequisites for opening left side cover of the computer
- Prerequisites for replacing storage drives
- Prerequisites for replacing hot-swappable storage drives in the front-access storage enclosure

- Prerequisites for replacing power supply assembly

For access, remove these parts in order, if any:

- “Side cover” on page 28
- “Slim ODD” on page 29
- “Front bezel” on page 34
- “Front-access storage enclosure or 3.5-inch optional storage drive cage” on page 39

Removal steps of the 2.5-inch optional storage drive cage

Release the four locking clips a securing the 2.5-inch storage drive cage from the 3.5-inch optional storage drive cage.

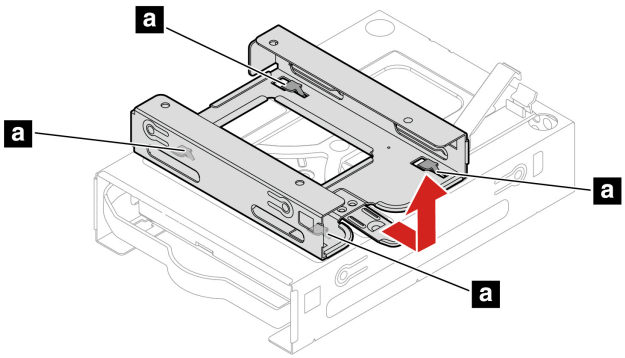

On-board M.2 SSD and heat sink

Prerequisite

Before you start, ensure that you have read the relevant sections in Prerequisites for hardware replacement, which includes:

- General prerequisites
- Prerequisites for opening left side cover of the computer
- Prerequisites for replacing storage drives
- Prerequisites for replacing hot-swappable storage drives in the front-access storage enclosure
- Prerequisites for replacing power supply assembly

Removal steps

1. Remove the “Side cover” on page 28.
2. Remove the on-board M.2 SSD and the heat sink.

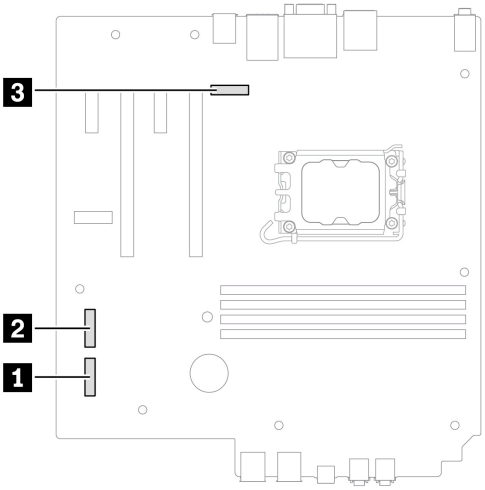

- From the slot 1 or the slot 2:
  - Type 1

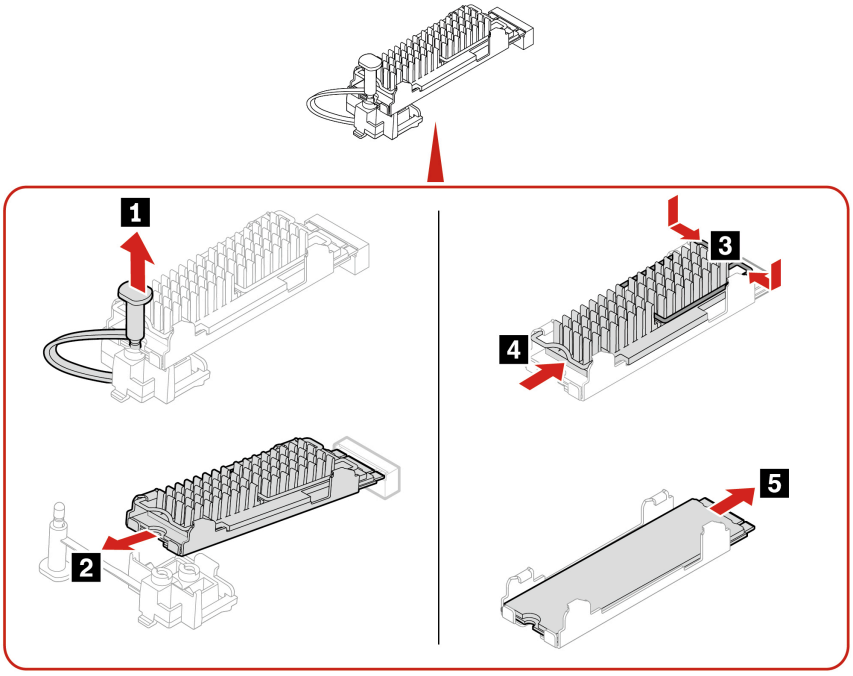

  - Type 2

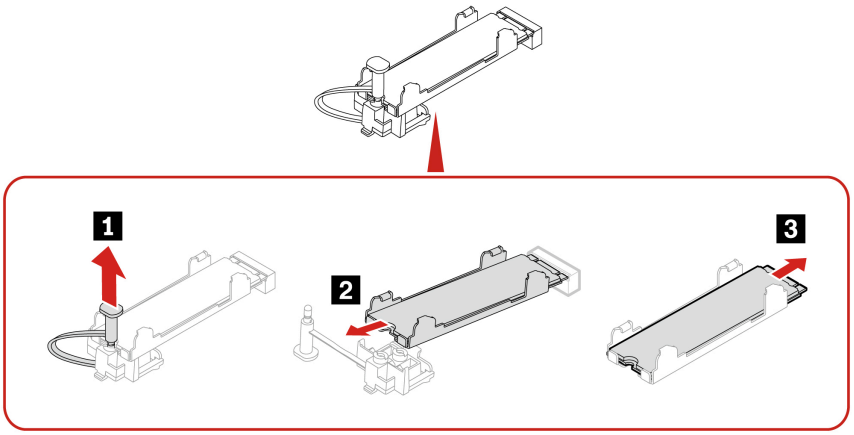

- From the slot 3:

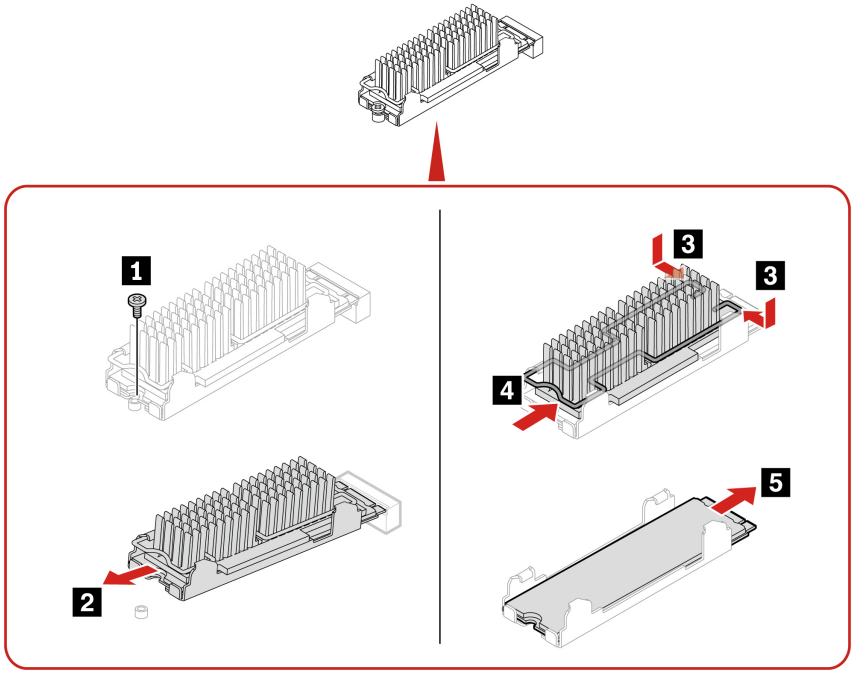

Installation rule

Install the 2280 Gen 4 M.2 SSD in the correct order shown in the following table:

Quantity of M.2 SSD	Installation slot
One	1 or 3
Two	1 and 2, or 1 and 3
Three	1, 2, and 3

On-board M.2 SSD holder

Prerequisite

Before you start, ensure that you have read the relevant sections in Prerequisites for hardware replacement, which includes:

- General prerequisites
- Prerequisites for opening left side cover of the computer
- Prerequisites for replacing storage drives
- Prerequisites for replacing hot-swappable storage drives in the front-access storage enclosure
- Prerequisites for replacing power supply assembly

Removal steps

1. Remove the following parts:
   a. “Side cover” on page 28
   b. “On-board M.2 SSD and heat sink” on page 41
2. Remove the M.2 SSD holder.

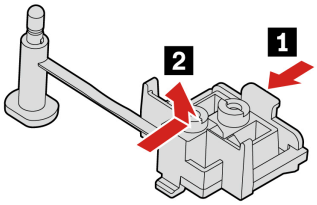

M.2 SSD and heat sink in an M.2 SSD PCIe adapter card

Prerequisite

Before you start, ensure that you have read the relevant sections in Prerequisites for hardware replacement, which includes:

- General prerequisites
- Prerequisites for opening left side cover of the computer
- Prerequisites for replacing storage drives
- Prerequisites for replacing hot-swappable storage drives in the front-access storage enclosure
- Prerequisites for replacing power supply assembly

Replacement steps

1. Remove the “Side cover” on page 28.
2. Locate and remove the M.2 SSD PCIe adapter card from the PCIe slot. See “PCIe cards” on page 47.
3. Replace the heat sink.

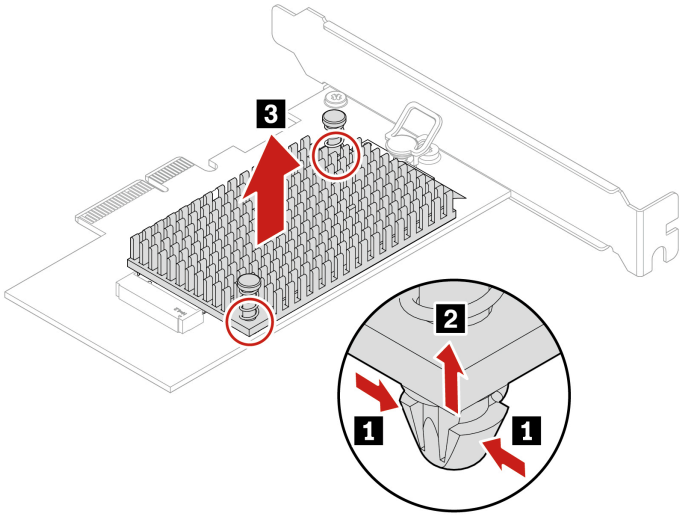

4. Remove the M.2 SSD.

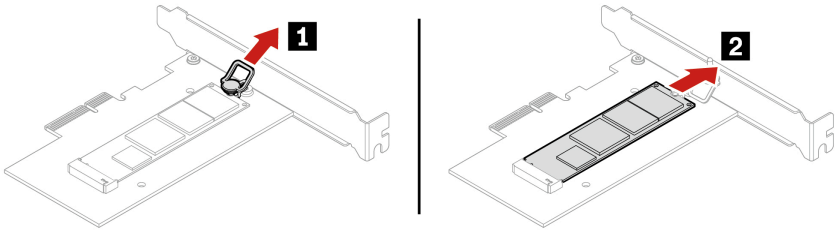

Installation steps

1. Install the thermal pad.

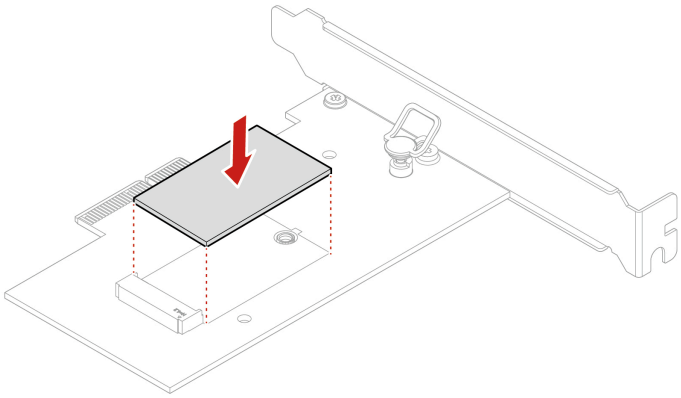

2. Install the M.2 SSD.

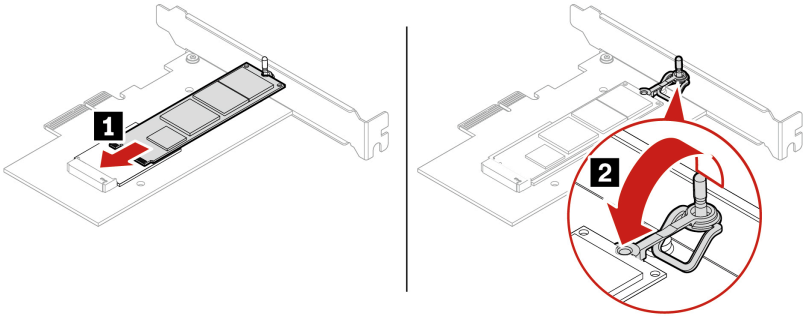

3. Install the heat sink.

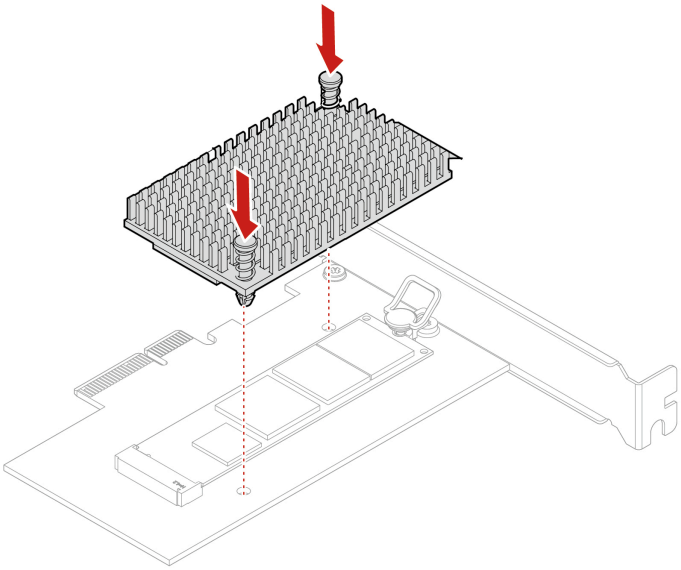

Side fan with bracket

Prerequisite

Before you start, ensure that you have read the relevant sections in Prerequisites for hardware replacement, which includes:

- General prerequisites
- Prerequisites for opening left side cover of the computer
- Prerequisites for replacing storage drives
- Prerequisites for replacing hot-swappable storage drives in the front-access storage enclosure
- Prerequisites for replacing power supply assembly

Removal steps

1. Remove the “Side cover” on page 28.
2. Disconnect the side fan cable from the side fan connector on the system board.
3. Remove the side fan with bracket.

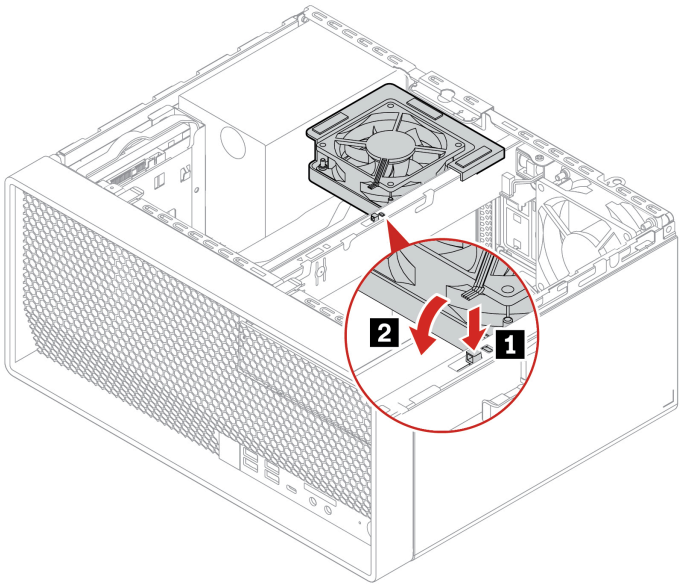

PCIe cards

By reading this section, you will learn to replace PCIe cards in your computer, including graphics cards, M.2 SSD PCIe adapter cards and other kinds of PCIe adapter cards.

PCIe card replacement rule

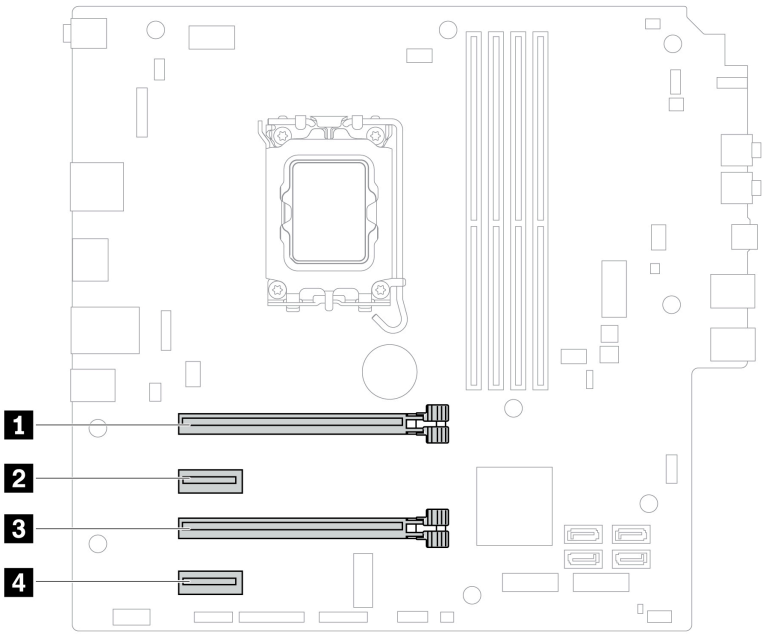

- If there is only one graphics card, install it in the slot 1.
- When there are two graphics cards,
  - the two graphics cards should be the same.

- install the graphics cards in the slot 1 first and then in the slot 3.
- remove the graphics cards from the slot 3 first and then from the slot 1 .

- Install the following PCIe cards in the slot 3, if any:
  - M.2 SSD PCIe adapter card
  - Rear USB-C connector (USB 20 Gbps) PCIe adapter card

PCIe card bracket

Note: Some computer models might not be shipped with PCIe card. In this case, the PCIe card bracket in the following illustration is removable.

Prerequisite

Before you start, ensure that you have read the relevant sections in Prerequisites for hardware replacement, which includes:

- General prerequisites
- Prerequisites for opening left side cover of the computer
- Prerequisites for replacing storage drives
- Prerequisites for replacing hot-swappable storage drives in the front-access storage enclosure
- Prerequisites for replacing power supply assembly

Removal steps

1. Remove the “Side cover” on page 28.
2. Remove the PCIe card bracket.

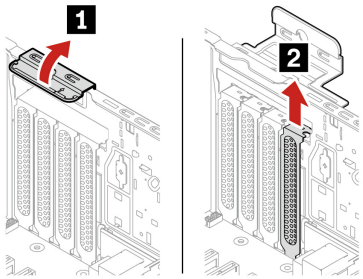

PCIe adapter card

Prerequisite

Before you start, ensure that you have read the relevant sections in Prerequisites for hardware replacement, which includes:

- General prerequisites
- Prerequisites for opening left side cover of the computer
- Prerequisites for replacing storage drives
- Prerequisites for replacing hot-swappable storage drives in the front-access storage enclosure
- Prerequisites for replacing power supply assembly

Removal steps

1. Remove the “Side cover” on page 28.
2. Remove the PCI-Express card

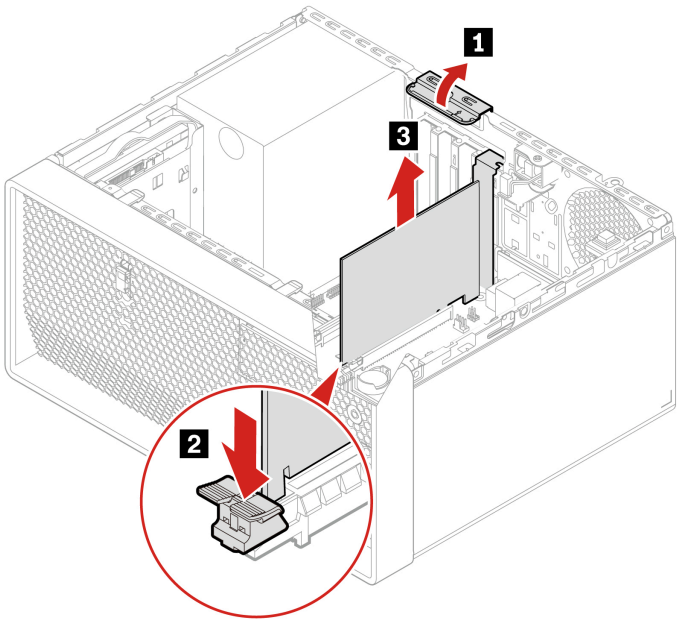

Graphics card holder

Prerequisite

Before you start, ensure that you have read the relevant sections in Prerequisites for hardware replacement, which includes:

- General prerequisites
- Prerequisites for opening left side cover of the computer
- Prerequisites for replacing storage drives
- Prerequisites for replacing hot-swappable storage drives in the front-access storage enclosure
- Prerequisites for replacing power supply assembly

Removal steps

1. Remove the “Side cover” on page 28.
2. Remove the graphics card holder.

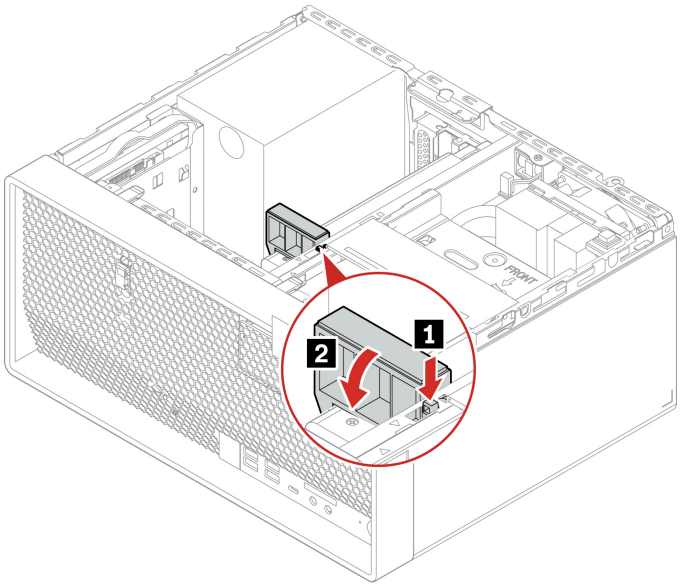

Installation steps

Install the graphics card holder.

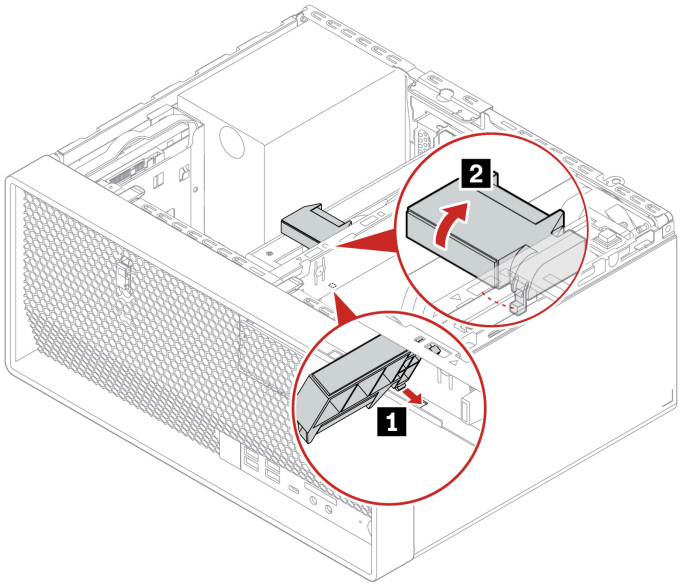

Graphics card

Prerequisite

Before you start, ensure that you have read the relevant sections in Prerequisites for hardware replacement, which includes:

- General prerequisites
- Prerequisites for opening left side cover of the computer

- Prerequisites for replacing storage drives
- Prerequisites for replacing hot-swappable storage drives in the front-access storage enclosure
- Prerequisites for replacing power supply assembly

Removal steps of type-1 graphics card

For access, do the following:

1. Remove the following parts, if any:
   - “Side cover” on page 28
   - “Slim ODD” on page 29
   - “Slim-ODD cage” on page 33
   - “Front bezel” on page 34
   - “Graphics card holder” on page 49
2. Disconnect the power cable (if any) from the graphics card.
3. Remove the bracket.

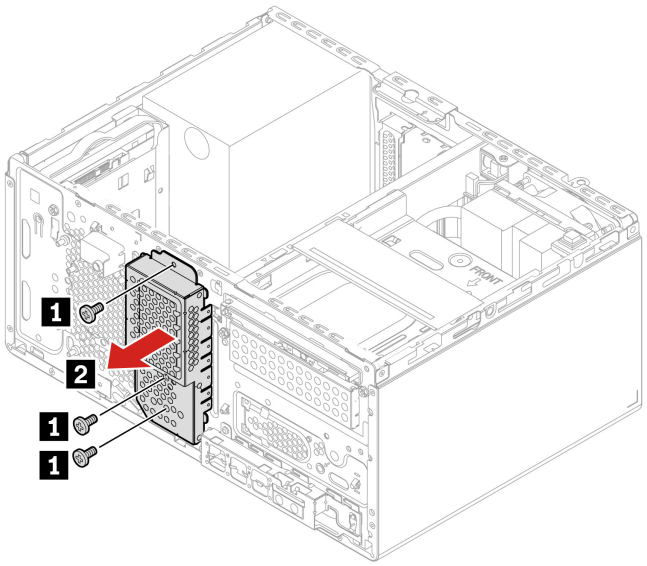

Step	Screw (quantity)	Torque
1	#6-32 × 5 mm (0.2 inches), Nickel coated (1)	0.56 ± 0.05 Nm (5.75 ± 0.57 kgf-cm)
1	M3 × 8 mm (0.3 inches), Zn coated (2)	0.56 ± 0.05 Nm (5.75 ± 0.57 kgf-cm)

4. Remove the graphics card with the extender.

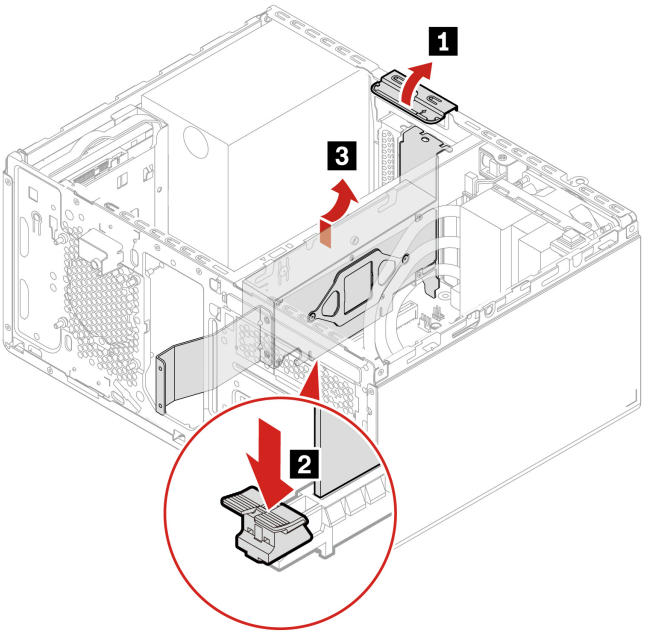

5. Remove the graphics card from the extender.

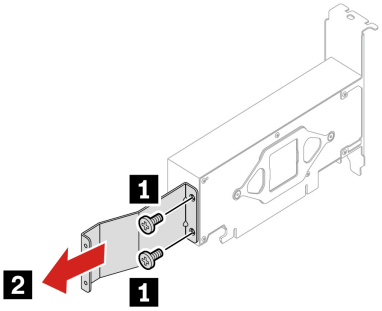

Step	Screw (quantity)	Torque
1	M3 × 8 mm (0.3 inches), Zn coated (2)	0.56 ± 0.05 Nm (5.75 ± 0.57 kgf-cm)

Removal steps of type-2 graphics card

For access, do the following:

1. Remove the following parts, if any:
   - “Side cover” on page 28
   - “Slim ODD” on page 29
   - “Slim-ODD cage” on page 33
   - “Front bezel” on page 34
   - “Side fan with bracket” on page 46
2. Disconnect the power cable (if any) from the graphics card.
3. Remove the screws and bracket.

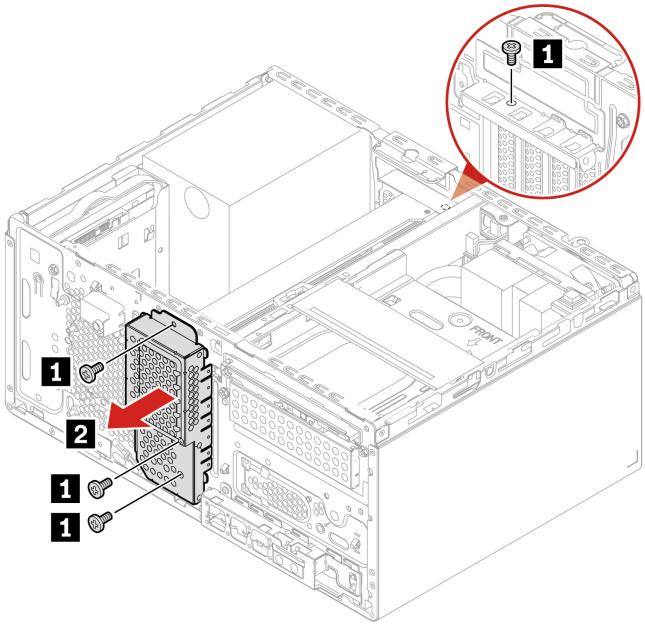

Step	Screw (quantity)	Torque
1	#6-32 × 5 mm (0.2 inches), Nickel coated (1)	0.56 ± 0.05 Nm (5.75 ± 0.57 kgf-cm)
1	M3 × 8 mm (0.3 inches), Zn coated, white (1)	0.56 ± 0.05 Nm (5.75 ± 0.57 kgf-cm)
1	M3 × 8 mm (0.3 inches), Zn coated, black (2)	0.56 ± 0.05 Nm (5.75 ± 0.57 kgf-cm)

4. Remove the graphics card.

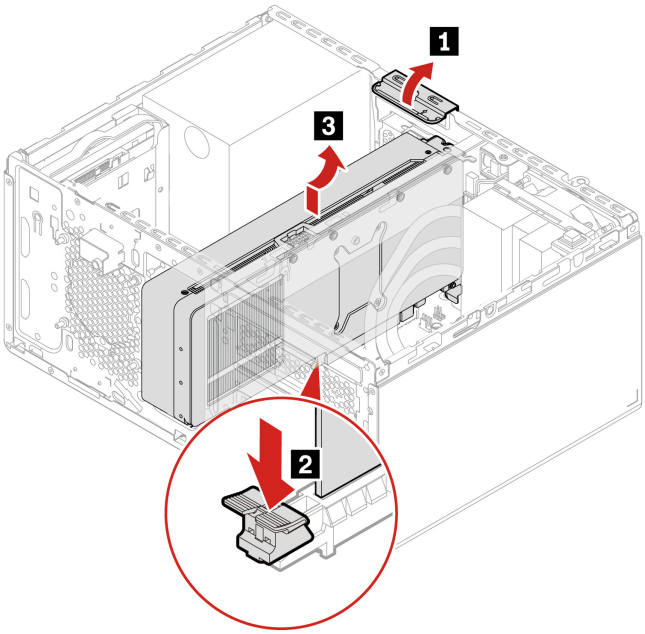

Removal steps of Removal steps of type-3 graphics card

For access, do the following:

1. Remove these parts in order, if any:
   - “Side cover” on page 28
   - “Graphics card holder” on page 49
2. Disconnect the power cable (if any) from the graphics card.
3. Remove the graphics card.

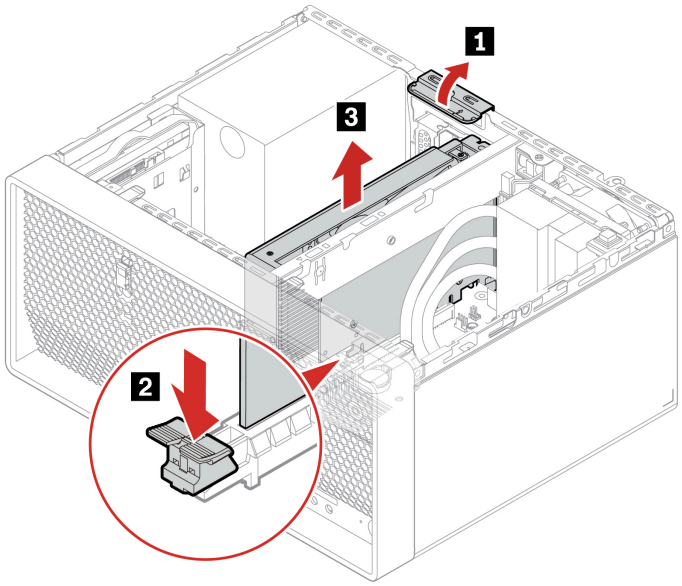

ODD EMI shielding

Prerequisite

Before you start, ensure that you have read the relevant sections in Prerequisites for hardware replacement, which includes:

- General prerequisites
- Prerequisites for opening left side cover of the computer
- Prerequisites for replacing storage drives
- Prerequisites for replacing hot-swappable storage drives in the front-access storage enclosure
- Prerequisites for replacing power supply assembly

Removal steps

1. Remove the following parts, if any:
   a. “Side cover” on page 28
   b. “Slim ODD” on page 29
   c. “Storage drive in the front-access storage enclosure or optional storage drive cage” on page 37
   d. “Front bezel” on page 34
2. Remove the ODD EMI shielding.

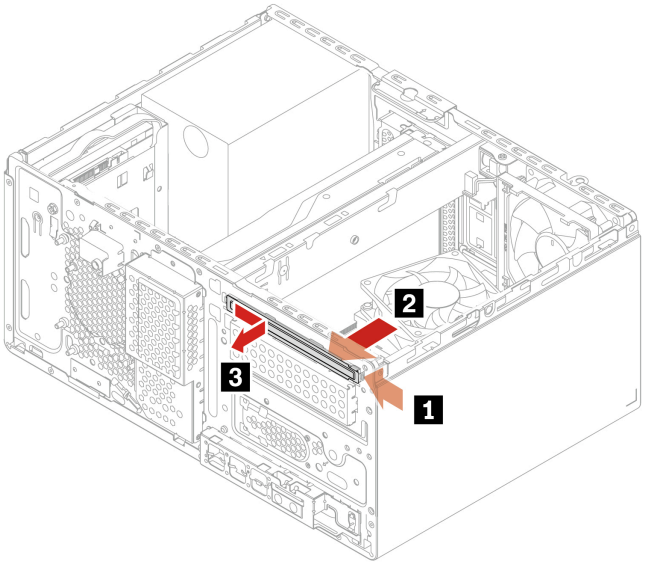

HDD EMI shielding

Prerequisite

Before you start, ensure that you have read the relevant sections in Prerequisites for hardware replacement, which includes:

- General prerequisites
- Prerequisites for opening left side cover of the computer
- Prerequisites for replacing storage drives
- Prerequisites for replacing hot-swappable storage drives in the front-access storage enclosure
- Prerequisites for replacing power supply assembly

Removal steps

1. Remove the following parts, if any:
   a. “Side cover” on page 28
   b. “Slim ODD” on page 29
   c. “Storage drive in the front-access storage enclosure or optional storage drive cage” on page 37
   d. “Front bezel” on page 34
2. Remove the HDD EMI shielding.

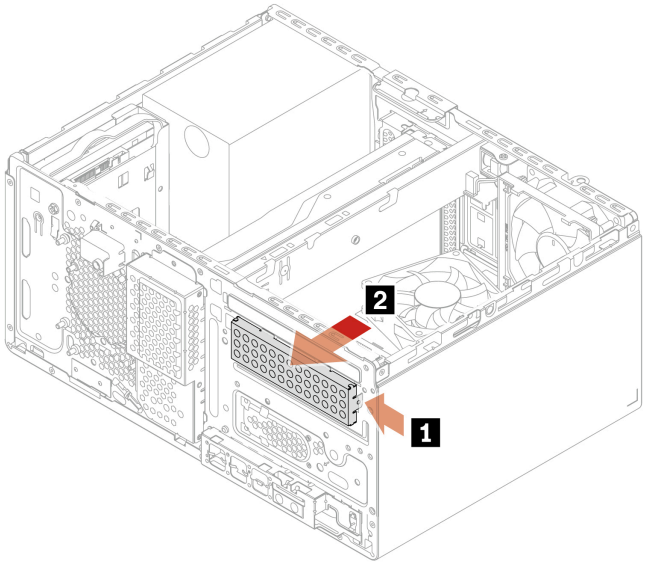

Front fan

Prerequisite

Before you start, ensure that you have read the relevant sections in Prerequisites for hardware replacement, which includes:

- General prerequisites
- Prerequisites for opening left side cover of the computer
- Prerequisites for replacing storage drives
- Prerequisites for replacing hot-swappable storage drives in the front-access storage enclosure
- Prerequisites for replacing power supply assembly

Removal steps

1. Remove the following parts:
   a. “Side cover” on page 28
   b. “Front bezel” on page 34
2. Disconnect the front fan cable from the front fan connector on the system board.
3. The front fan is attached to the chassis by four rubber mounts. Stretch the tips of the rubber mounts and gently pull the front fan assembly out of the chassis.

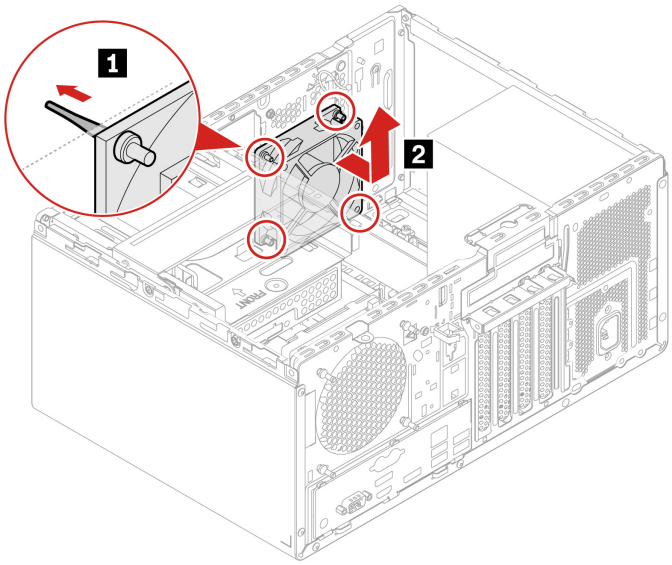

Installation steps

Align the rubber mounts with the corresponding holes in the chassis and push the rubber mounts through the holes. Rotate and pull the tips of the rubber mounts until the front fan assembly is secured.

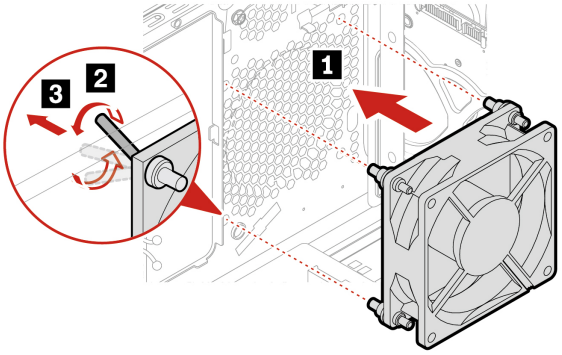

E-lock

Prerequisite

Before you start, ensure that you have read the relevant sections in Prerequisites for hardware replacement, which includes:

- General prerequisites
- Prerequisites for opening left side cover of the computer
- Prerequisites for replacing storage drives
- Prerequisites for replacing hot-swappable storage drives in the front-access storage enclosure
- Prerequisites for replacing power supply assembly

Removal steps

1. Remove the “Side cover” on page 28.
2. Remove the E-lock.

   Note: To remove the screws, you need a special tool (T15 star wrench).

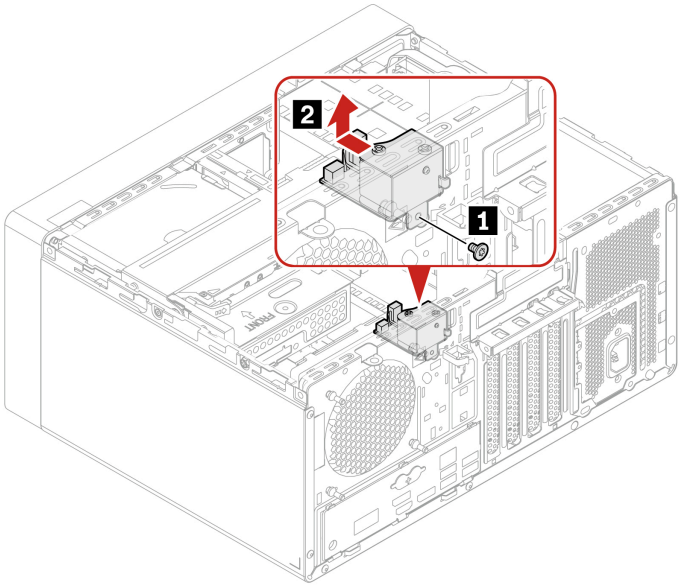

Step	Screw (quantity)	Torque
1	M3 × 5 mm (0.2 inches), Nickel coated (1)	0.56 ± 0.05 Nm (5.75 ± 0.57 kgf-cm)

Internal speaker

Prerequisite

Before you start, ensure that you have read the relevant sections in Prerequisites for hardware replacement, which includes:

- General prerequisites
- Prerequisites for opening left side cover of the computer
- Prerequisites for replacing storage drives
- Prerequisites for replacing hot-swappable storage drives in the front-access storage enclosure
- Prerequisites for replacing power supply assembly

Removal steps

1. Remove the “Side cover” on page 28.
2. Remove the internal speaker.

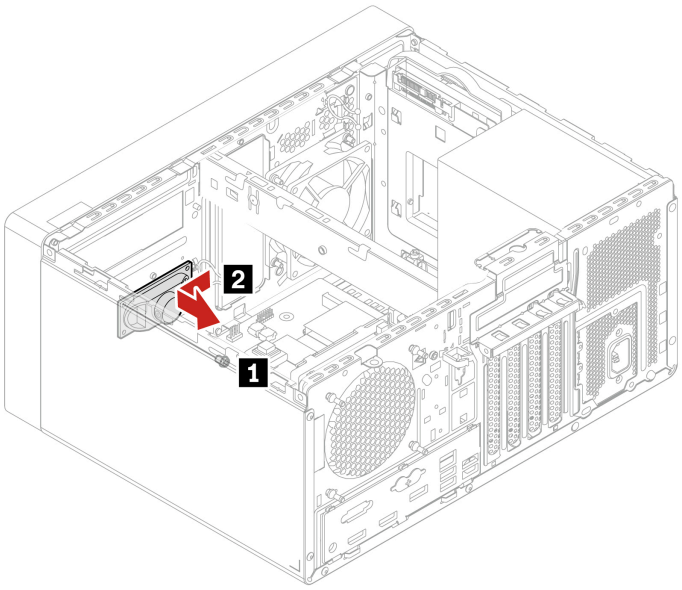

Step	Screw (quantity)	Torque
1	#6-32 × 5 mm (0.2 inches), Nickel coated (1)	0.56 ± 0.05 Nm (5.75 ± 0.57 kgf-cm)

Rear fan

Prerequisite

Before you start, ensure that you have read the relevant sections in Prerequisites for hardware replacement, which includes:

- General prerequisites
- Prerequisites for opening left side cover of the computer
- Prerequisites for replacing storage drives
- Prerequisites for replacing hot-swappable storage drives in the front-access storage enclosure
- Prerequisites for replacing power supply assembly

Removal steps

1. Remove the “Side cover” on page 28.
2. Disconnect the rear fan cable from the rear fan connector on the system board.
3. The rear fan is attached to the chassis by four rubber mounts. Stretch the tips of the rubber mounts and gently pull the rear fan assembly out of the chassis.

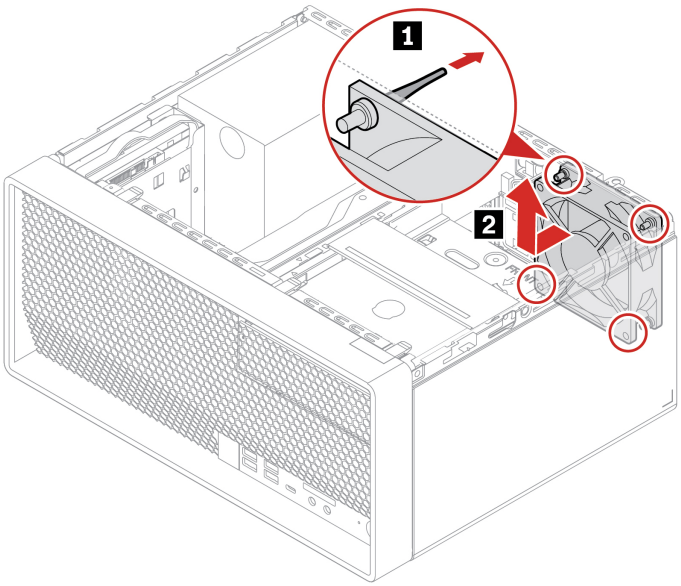

Installation steps

Align the rubber mounts with the corresponding holes in the chassis and push the rubber mounts through the holes. Rotate and pull the tips of the rubber mounts until the rear fan assembly is secured.

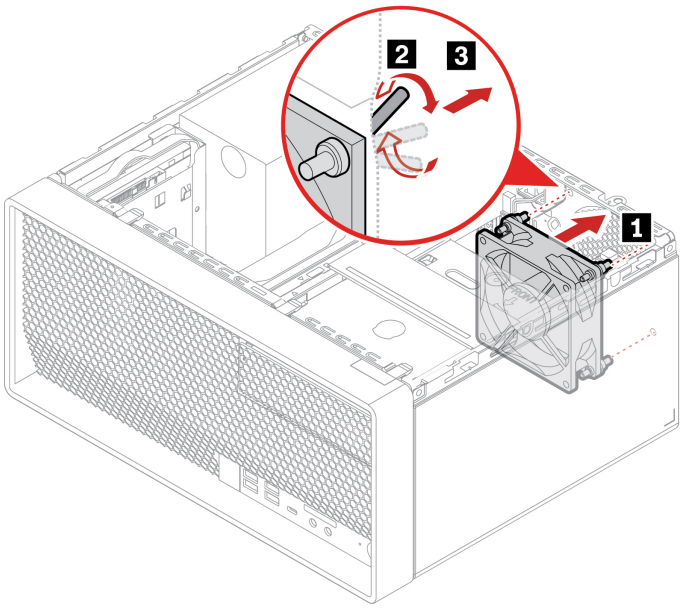

Smart cable clip

Prerequisite

Before you start, ensure that you have read the relevant sections in Prerequisites for hardware replacement, which includes:

- General prerequisites

- Prerequisites for opening left side cover of the computer
- Prerequisites for replacing storage drives
- Prerequisites for replacing hot-swappable storage drives in the front-access storage enclosure
- Prerequisites for replacing power supply assembly

Removal steps

Remove the smart cable clip.

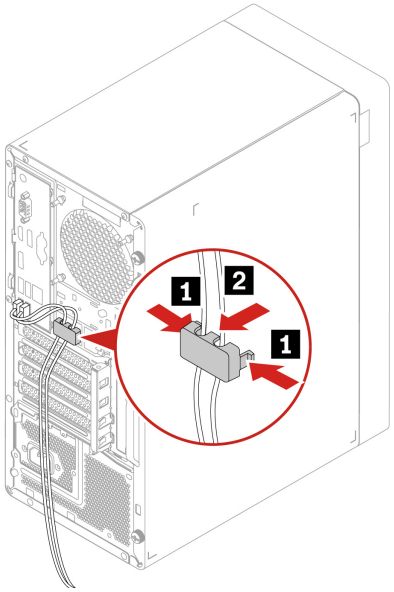

Rear Wi-Fi antenna cover

Prerequisite

Before you start, ensure that you have read the relevant sections in Prerequisites for hardware replacement, which includes:

- General prerequisites
- Prerequisites for opening left side cover of the computer
- Prerequisites for replacing storage drives
- Prerequisites for replacing hot-swappable storage drives in the front-access storage enclosure
- Prerequisites for replacing power supply assembly

Removal steps

Remove the Wi-Fi antenna cover.

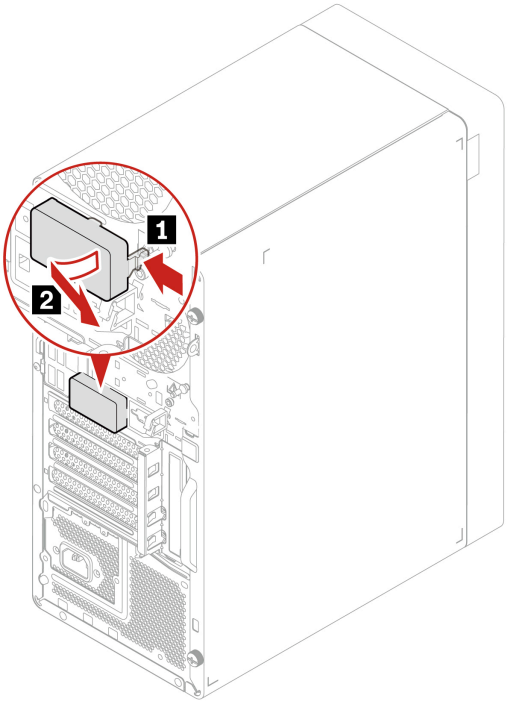

Chassis beam

Prerequisite

Before you start, ensure that you have read the relevant sections in Prerequisites for hardware replacement, which includes:

- General prerequisites
- Prerequisites for opening left side cover of the computer
- Prerequisites for replacing storage drives
- Prerequisites for replacing hot-swappable storage drives in the front-access storage enclosure
- Prerequisites for replacing power supply assembly

For access, remove the following parts, if any:

- “Side cover” on page 28
- “Slim ODD” on page 29
- “Slim-ODD cage” on page 33
- “Front bezel” on page 34
- “Side fan with bracket” on page 46
- “Graphics card holder” on page 49
- “Graphics card” on page 50

Removal steps

1. Gently press the chassis beam latch.

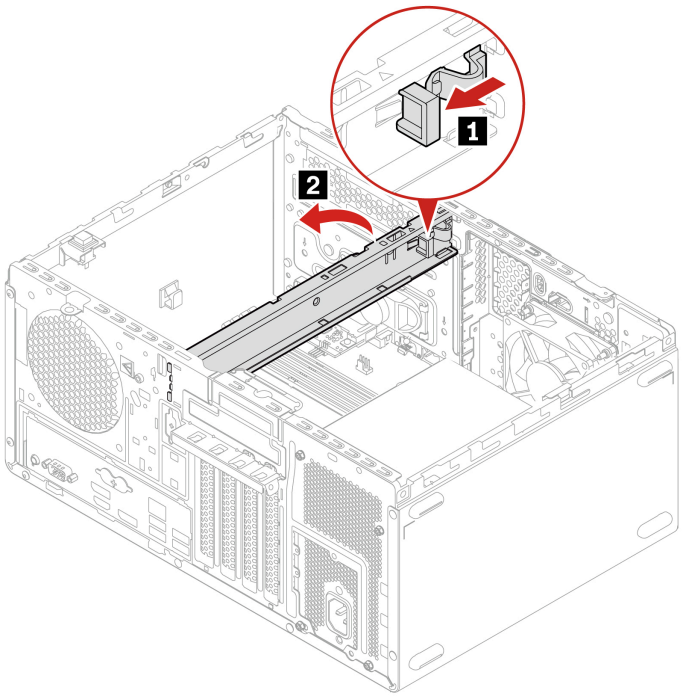

2. Remove the chassis beam.

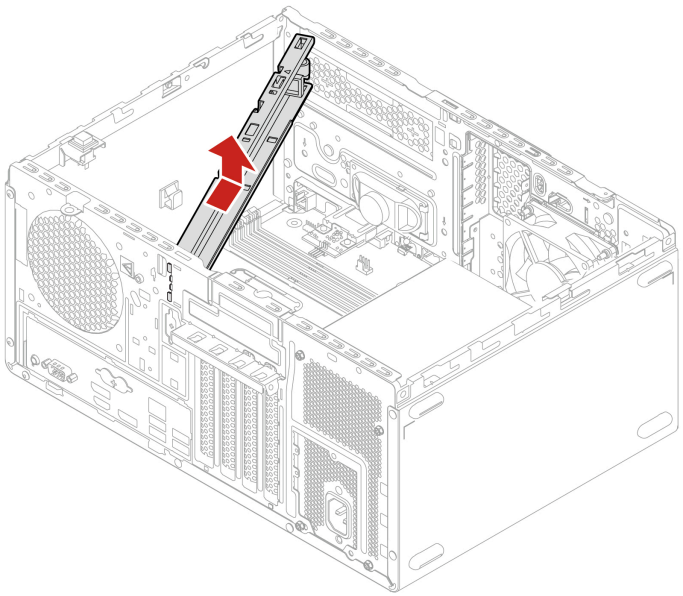

Memory module

Prerequisite

Before you start, ensure that you have read the relevant sections in Prerequisites for hardware replacement, which includes:

- General prerequisites
- Prerequisites for opening left side cover of the computer
- Prerequisites for replacing storage drives
- Prerequisites for replacing hot-swappable storage drives in the front-access storage enclosure
- Prerequisites for replacing power supply assembly

Removal steps

1. Remove the following parts, if any:
   a. “Side cover” on page 28.
   b. “Slim-ODD cage” on page 33.
2. Remove the memory module.

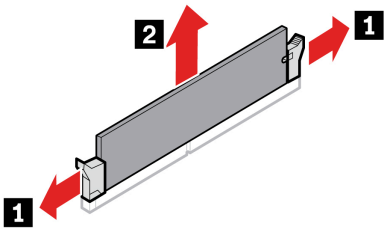

Installation steps and rules

- **Installation steps**

  Align the memory module to the slot and press down on both ends until the latches are fully engaged with a click.

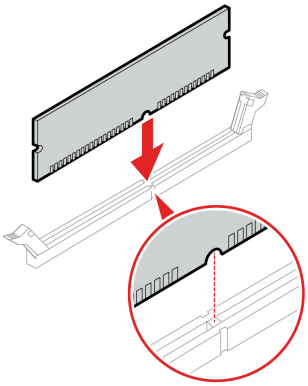

- **Installation rules**
  - Install memory modules in the correct order shown in the following illustration.

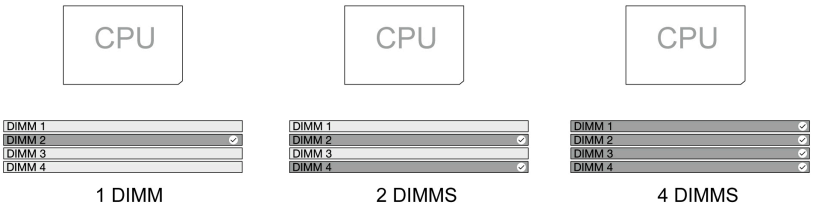

- Install memory modules of the same type, the same capacity, and the same DRAM densities. For example, ECC UDIMMS and non-ECC UDIMMs can’t be used together.
- The four memory slots support 2DPC (two DMIMs per channel). DIMM1 and DIMM2 is one channel. DIMM3 and DIMM4 is another channel. Symmetric configurations are required within one channel. Ensure that the two DIMMs installed in one channel are from the same manufacturer.

Chapter 6. Help and support

Find your serial number

This topic helps you find computer serial number.

You can find your serial number via:

- **Dashboard** or **Device** in the **Vantage** app
- Machine-type and serial-number label of your computer (shown as below illustration)

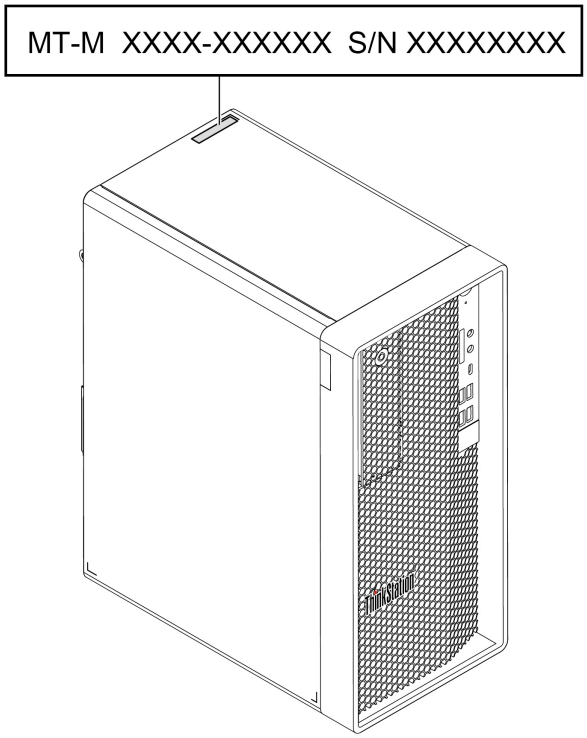

Diagnose and troubleshoot your computer

This section provides introduction to a set of diagnostics and troubleshooting tools at Lenovo Support Web site and the Vantage app. They can help you diagnose common software and hardware issues.

The following table lists these diagnostics tools and the recommended conditions for each tool.

© Copyright Lenovo 2025

Diagnostics tool	Recommended scenario
Troubleshoot and diagnose at Lenovo Support Web site	You want to have an online troubleshooting or scan of hardware and drivers on your computer.
Hardware scan	• Your computer is installed with the Vantage app. • You want to perform basic examinations of the hardware components.
Use ThinkStation diagnostic tool	You want to use diagnostic solutions to test hardware components and report operating-system-controlled settings that interfere with the correct operation of your computer.

Troubleshoot and diagnose at Lenovo Support Web site

Lenovo provides two different diagnosing solutions to help you identify and resolve problems on your computer.

Step 1. Go to https://www.pcsupport.lenovo.com/ and enter your product name in the search box.

Step 2. Click **Troubleshoot & Diagnose** and select the option that fits your need.

Notes:

- Before launching any automatic diagnosing process, a pop-up window will be prompted to install Lenovo Service Bridge. Lenovo Service Bridge helps to connect your computer with Lenovo diagnosing tools.
- Lenovo Support Web site makes periodic updates of the sections to keep improving your experience with your computer. The Web site interface and descriptions of sections might be different from that on your actual interface.

- If you are unaware of what problem your computer goes with, it is recommended that you select **Easy** and follow on-screen instructions to get your firmware updated and obtain the hardware status.
- If you have identified the problem on your computer, you can select **Custom** and follow on-screen instructions to resolve the problem.

If solutions can not resolve problems on your computer, you can follow on-screen instructions to submit an e-ticket or contact Lenovo for professional assistance.

Hardware scan

Hardware scan is an effective hardware testing tool to help you identify existing hardware issues.

To run the Hardware scan:

Step 1. Type **Vantage** in the Windows search box and then press Enter.

Step 2. Click **Hardware scan** or **Support → Hardware scan**.

Step 3. Select **QUICK SCAN** or **CUSTOMIZE** and then follow the on-screen instructions to run the hardware scan.

Notes:

- The Quick Scan tool contains a pre-selected suite of tests that performs basic examinations of the hardware components found in the system. The Customize tool enables you to select one or several hardware components to perform the examinations.

- Before selecting **QUICK SCAN**, click **Refresh Modules** to ensure that the list of hardware components is the components currently available for the computer.

Step 4. If any hardware failure is detected, the result varies depending on the warranty status and varies by country or region. Follow the on-screen instructions to resolve the issue.

Use ThinkStation diagnostic tool

When an error message pops up in the Windows notification area, a four-digit error code is displayed on the diagnostic LCD (for selected models) on the front panel, or the diagnostic indicator on the front panel turns on, do one of the following:

- If ThinkStation Diagnostics can be launched properly:
  1. Click the error message or the ThinkStation Diagnostics icon to launch the program.
  2. All events are logged locally in the program. Locate the related event and view the event log to find possible solutions.
  3. Record the four-digit error code displayed on the diagnostic LCD (for selected models) or in ThinkStation Diagnostics, and then decode the error at https://www.thinkworkstationsoftware.com/codes.

  Note: You can download ThinkStation Diagnostics at https://pcsupport.lenovo.com/lenovodiagnosticsolutions/downloads.
- If your computer does not function:
  1. Use your smartphone to scan the QR code displayed on the diagnostic LCD to open https://www.thinkworkstationsoftware.com/codes.
  2. Decode the error according to the four-digit error code displayed on the diagnostic LCD.

For more information, go to https://www.thinkworkstationsoftware.com/diags.

Recover your Windows operating system

When you encounter some unexpected issues with your operating system, you can choose to recover your operating system by yourself or call Lenovo Customer Support Center.

Note: Microsoft constantly makes updates to the Windows operating system. Before installing a particular Windows version, check the compatibility list for the Windows version. For details, go to https://support.lenovo.com/us/en/solutions/ht512575.

To recover your operating system to...	See.
Factory defaults	Refer to the instructions in https://support.lenovo.com/HowToCreateLenovoRecovery
A previous system point	Refer to the instructions in Popular Topics: https://support.lenovo.com/solutions/ht118590

Call Lenovo

If you have tried to correct the problem yourself and still need help, you can call Lenovo Customer Support Center.

Before you contact Lenovo

Prepare the needed information before you contact Lenovo.

1. Record the problem symptoms and details:
   - What is the problem? Is it continuous or intermittent?
   - Any error message or error code?
   - What operating system are you using? Which version?
   - Which software applications were running at the time of the problem?
   - Can the problem be reproduced? If so, how?
2. Record the system information:
   - Product name.
   - Machine type and “serial number” on page 66.

Lenovo Customer Support Center

During the warranty period, you can call Lenovo Customer Support Center for help.

Telephone numbers

For a list of the Lenovo Support phone numbers for your country or region, go to: https://pcsupport.lenovo.com/supportphonelist

Note: Phone numbers are subject to change without notice. If the number for your country or region is not provided, contact your Lenovo reseller or Lenovo marketing representative.

Self-help resources

Use the following self-help resources to learn more about the computer and troubleshoot problems.

Resources	How to access?
Lenovo Support Web Site	https://pcsupport.lenovo.com
Tips	https://www.lenovo.com/tips
Lenovo Community	https://forums.lenovo.com
Accessibility information	https://www.lenovo.com/accessibility
Windows help information	• Open the Start menu and click **Get Help** or **Tips**. • Use Windows Search. • Microsoft support Web site: https://support.microsoft.com

Purchase accessories or additional services

This topic provides instructions on how to purchase accessories or additional services.

Accessories

Lenovo has a number of hardware accessories and upgrades to help expand the functionalities of your computer. Accessories include memory modules, storage devices, network cards, power adapters, keyboards, mice, and so on.

To shop at Lenovo, go to https://www.lenovo.com/accessories.

Additional services

During and after the warranty period, you can purchase additional services from Lenovo at https://pcsupport.lenovo.com/warrantyupgrade.

Service availability and service names might vary by country or region.

Accessibility features

Lenovo is committed to making information technology accessible to everyone, including individuals with hearing, vision, mobility, cognitive, or speech disabilities. To get the most up-to-date and detailed accessibility features information for the product, go to https://support.lenovo.com/docs/product_accessibility_features.

Appendix A. Notice for USB connector name update

The USB Implementers Forum published a revision of the guideline for USB connector names in September, 2022. Lenovo follows the revised guideline and updates USB connector names accordingly. You can refer to the table below for naming update details.

Current name	Previous name
USB-A connector (Hi-Speed USB)	USB-A 2.0 connector
USB-A connector (USB 5Gbps)	USB-A 3.2 Gen 1 connector
USB-A connector (USB 10Gbps)	USB-A 3.2 Gen 2 connector
USB-A connector (USB 5Gbps, Always On USB)	Always on USB-A 3.2 Gen 1 connector
USB-A connector (USB 10Gbps, Always On USB)	Always on USB-A 3.2 Gen 2 connector
USB-C connector (USB 5Gbps)	USB-C (3.2 Gen 1) connector
USB-C connector (USB 10Gbps)	USB-C (3.2 Gen 2) connector
USB-C connector (USB 20Gbps)	USB 3.2 Gen 2x2
USB-C connector (USB4 20Gbps)	USB 4 Gen 2x2
USB-C connector (USB4 40Gbps)	USB-C (USB 4) connector
USB-C connector (Thunderbolt 3)	USB-C (Thunderbolt 3) connector
USB-C connector (Thunderbolt 4)	USB-C (Thunderbolt 4) connector

© Copyright Lenovo 2025

Appendix B. Notices and trademarks

Notices

Lenovo may not offer the products, services, or features discussed in this document in all countries. Consult your local Lenovo representative for information on the products and services currently available in your area. Any reference to a Lenovo product, program, or service is not intended to state or imply that only that Lenovo product, program, or service may be used. Any functionally equivalent product, program, or service that does not infringe any Lenovo intellectual property right may be used instead. However, it is the user's responsibility to evaluate and verify the operation of any other product, program, or service.

Lenovo may have patents or pending patent programs covering subject matter described in this document. The furnishing of this document does not give you any license to these patents. You can send license inquiries, in writing, to:

Lenovo (United States), Inc.
8001 Development Drive
Morrisville, NC 27560
U.S.A.
Attention: Lenovo Director of Licensing

LENOVO PROVIDES THIS PUBLICATION "AS IS" WITHOUT WARRANTY OF ANY KIND, EITHER EXPRESS OR IMPLIED, INCLUDING, BUT NOT LIMITED TO, THE IMPLIED WARRANTIES OF NON-INFRINGEMENT, MERCHANTABILITY OR FITNESS FOR A PARTICULAR PURPOSE. Some jurisdictions do not allow disclaimer of express or implied warranties in certain transactions, therefore, this statement may not apply to you.

Changes are made periodically to the information herein; these changes will be incorporated in new editions of the publication. To provide better service, Lenovo reserves the right to improve and/or modify the products and software programs described in the manuals included with your computer, and the content of the manual, at any time without additional notice.

The software interface and function and hardware configuration described in the manuals included with your computer might not match exactly the actual configuration of the computer that you purchase. For the configuration of the product, refer to the related contract (if any) or product packing list, or consult the distributor for the product sales. Lenovo may use or distribute any of the information you supply in any way it believes appropriate without incurring any obligation to you.

The products described in this document are not intended for use in implantation or other life support applications where malfunction may result in injury or death to persons. The information contained in this document does not affect or change Lenovo product specifications or warranties. Nothing in this document shall operate as an express or implied license or indemnity under the intellectual property rights of Lenovo or third parties. All information contained in this document was obtained in specific environments and is presented as an illustration. The result obtained in other operating environments may vary.

Lenovo may use or distribute any of the information you supply in any way it believes appropriate without incurring any obligation to you.

Any references in this publication to non-Lenovo Web sites are provided for convenience only and do not in any manner serve as an endorsement of those Web sites. The materials at those Web sites are not part of the materials for this Lenovo product, and use of those Web sites is at your own risk.

© Copyright Lenovo 2025

Any performance data contained herein was determined in a controlled environment. Therefore, the result obtained in other operating environments may vary significantly. Some measurements may have been made on development-level systems and there is no guarantee that these measurements will be the same on generally available systems. Furthermore, some measurements may have been estimated through extrapolation. Actual results may vary. Users of this document should verify the applicable data for their specific environment.

This document is copyrighted by Lenovo and is not covered by any open source license, including any Linux® agreement(s) which may accompany software included with this product. Lenovo may update this document at any time without notice.

For the latest information or any questions or comments, contact or visit the Lenovo Web site:

https://pcsupport.lenovo.com

Trademarks

Lenovo, the Lenovo logo, Lenovo Legion, IdeaPad, Yoga, ThinkCentre, the ThinkCentre logo, ThinkEdge, the ThinkEdge logo, ThinkStation, the ThinkStation logo, ThinkPad, the ThinkPad logo, and TrackPoint are trademarks of Lenovo. Intel, Intel Optane, and Thunderbolt are trademarks of Intel Corporation or its subsidiaries in the U.S. and/or other countries. Linux is the registered trademark of Linus Torvalds in the U.S. and other countries. Microsoft, Microsoft Teams, Windows, Windows Hello, One Drive, Outlook, Skype, Office 365, Direct3D, and BitLocker are trademarks of the Microsoft group of companies. Mini DisplayPort (mDP) and DisplayPort are trademarks of the Video Electronics Standards Association. NVIDIA is a registered trademark of NVIDIA Corporation. Dolby, Dolby Voice, Dolby Audio and Dolby Atmos are trademarks of Dolby Laboratories Licensing Corporation. The terms HDMI and HDMI High-Definition Multimedia Interface are trademarks or registered trademarks of HDMI Licensing LLC in the United States and other countries. USB4® and USB-C® are registered trademarks of USB Implementers Forum. Wi-Fi and Miracast are registered trademarks of Wi-Fi Alliance. All other trademarks are the property of their respective owners.

Lenovo