ERICSSON ENTERPRISE WIRELESS
DOCUMENTATION PORTAL

Ericsson Cradlepoint AP2600 Wi-Fi 6 Access Point Quick Start Guide

09/21/2026

This PDF Book is current as of the download date. Please check docs.cradlepoint.com to ensure you have the most recent version of this content.

© Copyright 2024 Ericsson Enterprise Solutions, Inc. All rights reserved.

Overview

- Models Covered in this Guide

Before You Begin

- External Device Components
- Location Considerations
- Required Tools for Setup

Setup

- Verify box contents
- Mounting the AP
- Connecting Ethernet PoE Cable
- Initial Setup and Registration

Understanding the LED

Safety and Regulatory Information

Overview

Read this guide for basic installation and setup information for the Ericsson Cradlepoint AP2600 Wi-Fi 6 Access Point.

Models Covered in this Guide

Follow the instructions in this guide to setup the following models:

Hardware	Model Numbers
Ericsson Cradlepoint AP2600 Wi-Fi 6 Access Point	• S1A527A (FCC) • S1A527AB (ISED) • S1A527A-IS

Note

Para su uso en México:

La operación de este equipo está sujeta a las siguientes dos condiciones:

(1) es posible que este equipo o dispositivo no cause interferencia perjudicial y

(2) este equipo o dispositivo debe aceptar cualquier interferencia, incluyendo la que pueda causar su operación no deseada.

Operating Temperature

The AP2600 Wi-Fi 6 Access Point can operate from 32° F to 113° F (0° C to 45° C).

Before You Begin

Read the following before setting up the access point using the instructions in the Setup section.

External Device Components

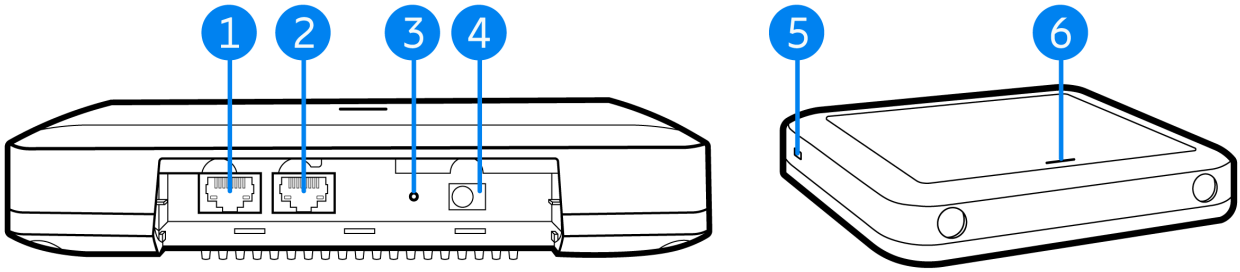

1	LAN Port: 10/100/1000BASE-T
2	Uplink (PoE) Port: 10/100/1000BASE-T, 802.3at PoE
3	Restart/Reset button
4	12 V DC power input (unused when PoE is connected)
5	Kensington lock slot
6	System LED Indicator

Location Considerations

The AP2600 access point is built for installation in indoor environments.

To ensure the access point operates efficiently, following are best practices for determining the installation location:

- Ensure the device is positioned for optimal Wi-Fi signal reception.
- Avoid positioning near concrete walls, metal or reflective surfaces, or any other objects that may interfere with the antennas, RF reception, or cables.
- Ensure plenty of airflow for ventilation. Avoid installing the device in narrowly enclosed spaces that may allow overheating.
- Mount the device in a location compliant with the Safety, Regulatory, and Warranty Guide, included in the product shipping box.

Required Tools for Setup

- Mounting equipment, varies upon desired mounting location. These tools may include, but are not limited to:
  - Drill bits: 2.5 mm (±0.2 mm) holes for M3 self-tapping screws, or 4.5 mm (±0.2 mm) holes for nylon wall anchors
  - Additional screws as needed
  - Zip ties (for cable management)

Setup

The following instructions guide you through the basic setup of the access point, including:

1. Checking the contents of the box
2. Mounting the AP
3. Connecting Cables
4. Initial Setup and Registration
5. Understanding the System LED

Verify box contents

Refer to the following to ensure you received all items included with the hardware:

- [1] Ericsson Cradlepoint AP2600 Wi-Fi 6 Access Point
- [1] Mounting bracket
- [4] Wall/ceiling mount screws and anchors
- [1] Mounting bracket security screw (unused)
- [1] Getting Started reference sheet
- [1] Safety, Regulatory, and Warranty guide

Mounting the AP

The AP can be installed on wall or ceiling using the included mounting bracket.

Mounting on a Wall

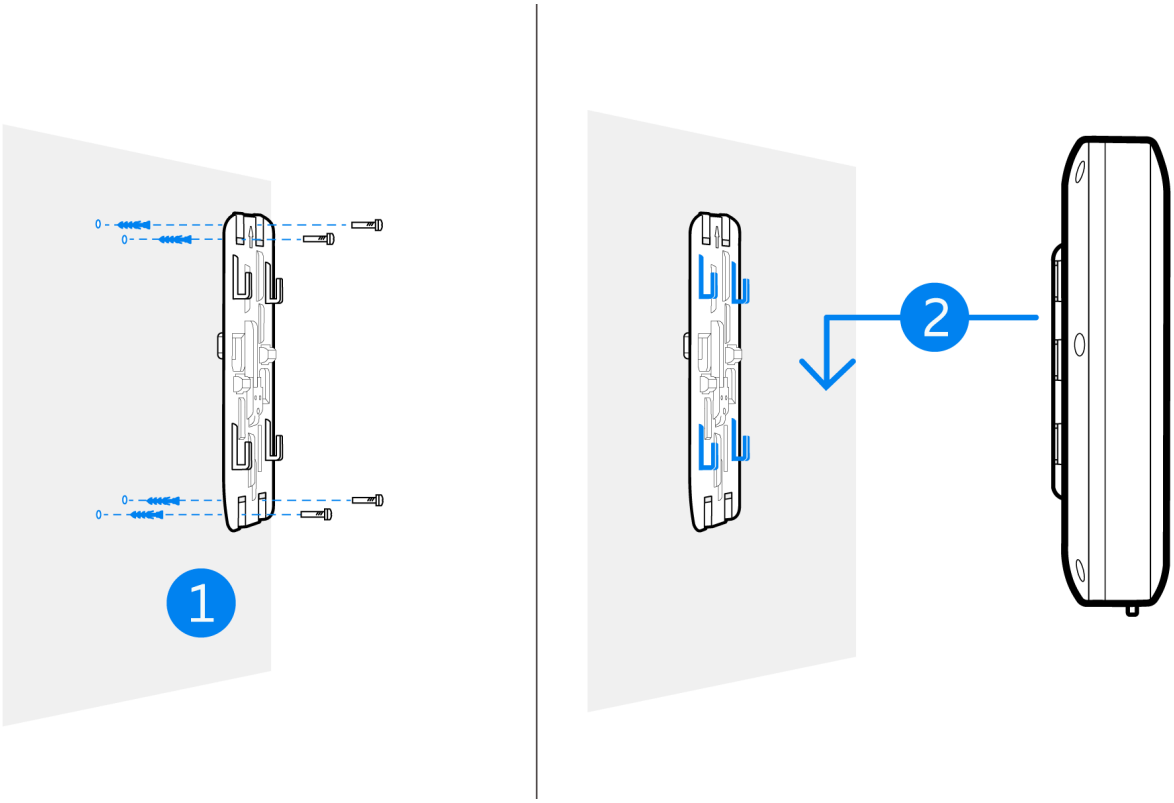

1. At the installation location on the wall, use the metal mounting bracket as a guide to mark four holes for the wall plugs and screws (included in the screw kit).

   Drill four holes for the anchors, and then insert the anchors. Use a mallet or small hammer to carefully drive the anchors flush with the wall surface. Use the four screws to secure the bracket to the wall.

Note

Drill 2.5 mm (±0.2 mm) holes for M3 self-tapping screws (when not using anchors), or 4.5 mm (±0.2 mm) holes for the nylon wall anchors.

2. With its ports facing down, place the AP2600 access point over the bracket flanges and then slide it down until it snaps into its secured position.

Mounting on a Ceiling

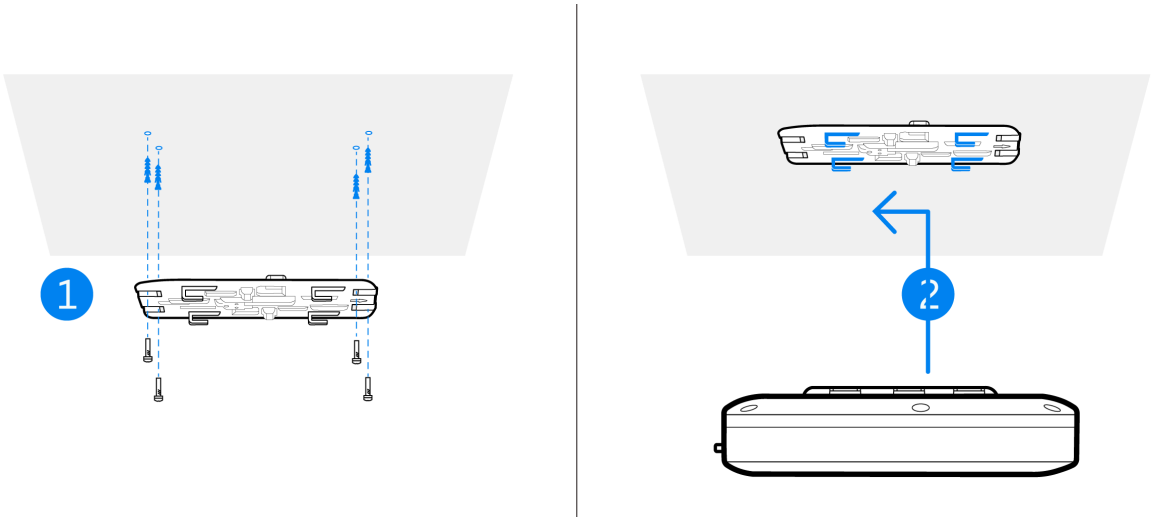

1. At the installation location on the ceiling, use the metal mounting bracket as a guide to mark four holes for the anchors and screws (included in the box). The mounting bracket is not intended for use with drop ceiling T-bars.

   Drill four holes for the anchors, and then insert the anchors. Use a mallet or small hammer to carefully drive the anchors flush with the ceiling surface. Use the four screws to secure the bracket to the ceiling (screw torque must be less than 6 kgf.cm or .6 Nm).

Note

Drill 2.5 mm (±0.2 mm) holes for M3 self-tapping screws (when not using anchors), or 4.5 mm (±0.2 mm) holes for the nylon wall anchors.

2. Place the AP2600 access point over the bracket flanges and then slide it onto the bracket until it snaps into its secured position.

Connecting Ethernet PoE Cable

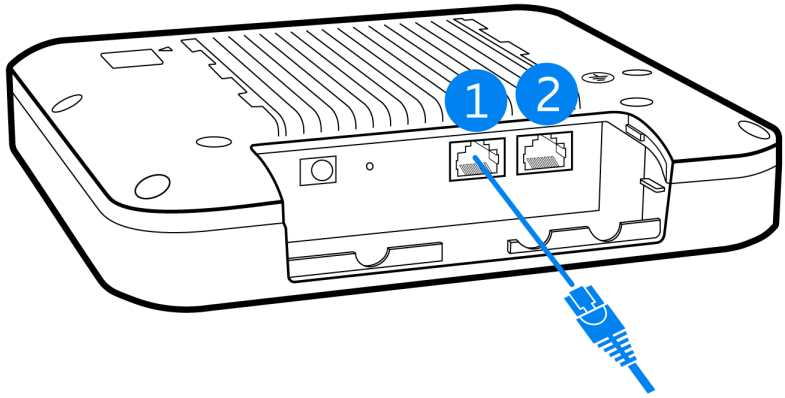

1. Connect a Category 5e or better cable to the Uplink (PoE) 1000BASE-T RJ-45 port. Connect the other end to a PoE source to power to the unit. When power is available, the access point automatically boots up.

   Note

   If a Class I PoE adapter or switch is used to provide PoE power, verify that the power cord to the device providing power is firmly plugged into a power source and confirm it is grounded.

2. (Optional) Connect a local LAN switch or computer to the other LAN 1000BASE-T RJ-45 port.

Removing Door Tabs

The door for the device ships with tabs covering the cable holes. As you connect cables, be sure to remove the associated tabs before attempting the replace the door.

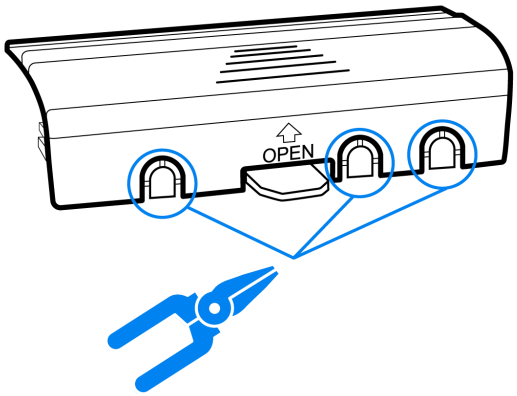

Initial Setup and Registration

When properly connected to a supported Ericsson Cradlepoint router, the access point appears in NetCloud Manager and is available for configuration. See the following guides for more information:

- LAN Solutions Deployment
- Troubleshooting LAN Solutions Deployments

Understanding the LED

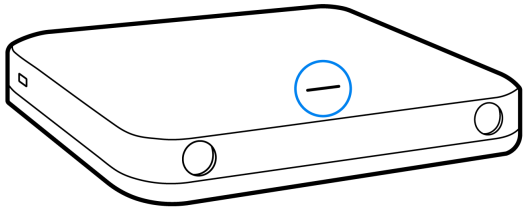

Refer to the following table for information about LED indicator.

System LED State and Color	Meaning
Solid Green	Device is operating normally.
Flashing Green	Device is booting up.
Flashing Purple	NetCloud uplink activity.
Flashing Orange	Not connected to NetCloud.

Safety and Regulatory Information

FCC Class B

This equipment has been tested and found to comply with the limits for a Class B digital device, pursuant to Part 15 of the FCC Rules. These limits are designed to provide reasonable protection against harmful interference in a residential installation. This equipment generates, uses and can radiate radio frequency energy and, if not installed and used in accordance with the instructions,

may cause harmful interference to radio communications. However, there is no guarantee that interference will not occur in a particular installation. If this equipment does cause harmful interference to radio or television reception, which can be determined by turning the equipment off and on, the user is encouraged to try to correct the interference by one of the following measures:

- Reorient or relocate the receiving antenna
- Increase the separation between the equipment and receiver
- Connect the equipment into an outlet on a circuit different from that to which the receiver is connected
- Consult the dealer or an experienced radio/TV technician for help

FCC Caution

Any changes or modifications not expressly approved by the party responsible for compliance could void the user’s authority to operate this equipment.

This device complies with Part 15 of the FCC Rules. Operation is subject to the following two conditions: (1) This device may not cause harmful interference, and (2) this device must accept any interference received, including interference that may cause undesired operation.

For product available in the USA/Canada market, only channel 1~11 can be operated. Selection of other channels is not possible.

Important

FCC Radiation Exposure Statement: This equipment complies with FCC radiation exposure limits set forth for an uncontrolled environment. This equipment should be installed and operated with minimum distance 20 cm between the radiator and your body.

Professional Installation Instructions

1. Installation personnel

   This product is designed for specific applications and should be installed by qualified personnel who have knowledge of RF and its related regulations. A general user shall not attempt to install or modify the equipment configuration.

2. Installation location

   To meet regulatory RF exposure requirements, this product shall be installed at a location where, during normal operations, the radiating antenna is at least 20 cm away from any nearby persons.

3. Installation procedure

   Please refer to the information in this guide for the procedure details.

4. Warning

   The installation position must be carefully selected so that the final output power does not exceed the limit set forth in relevant regulations. Violation of output power regulations could lead to serious federal penalties.