Maintenance and Service Guide
HP Z Captis

SUMMARY

This guide provides maintenance information about such topics as spare parts and removal and replacement of parts.

© Copyright 2024, 2025 HP Development Company, L.P.

Microsoft and Windows are either registered trademarks or trademarks of Microsoft Corporation in the United States and/or other countries. NVIDIA and Xavier are trademarks and/or registered trademarks of NVIDIA Corporation in the U.S. and other countries. USB Type-C® and USB-C® are registered trademarks of USB Implementers Forum.

The information contained herein is subject to change without notice. The only warranties for HP products and services are set forth in the express warranty statements accompanying such products and services. Nothing herein should be construed as constituting an additional warranty. HP shall not be liable for technical or editorial errors or omissions contained herein.

Second Edition: May 2025

First Edition: September 2024

Document Part Number: P08255-002

Product notice

This guide describes features that are common to most models. Some features may not be available on your computer.

Not all features are available in all editions or versions of Windows. Systems may require upgraded and/or separately purchased hardware, drivers, software or BIOS update to take full advantage of Windows functionality. Windows is automatically updated, which is always enabled. High-speed internet and Microsoft account required. ISP fees may apply and additional requirements may apply over time for updates. See http://www.windows.com. **If your product ships with Windows in S Mode:** Windows in S Mode works exclusively with apps from the Microsoft Store within Windows. Certain default settings, features, and apps cannot be changed. Some accessories and apps that are compatible with Windows may not work (including some antivirus, PDF writers, driver utilities, and accessibility apps), and performance may vary, even if you switch out of S Mode. If you switch to Windows, you cannot switch back to S Mode. Learn more at Windows.com/SmodeFAQ.

To access the latest user guides, go to http://www.hp.com/support, and follow the instructions to find your product. Then select **Manuals**.

Software terms

By installing, copying, downloading, or otherwise using any software product preinstalled on this computer, you agree to be bound by the terms of the HP End User License Agreement (EULA). If you do not accept these license terms, your sole remedy is to return the entire unused product (hardware and software) within 14 days for a full refund subject to the refund policy of your seller.

For any further information or to request a full refund of the price of the computer, please contact your seller.

Not all features are available in all editions of Windows. This computer may require upgraded and/or separately purchased hardware, drivers and/or software to take full advantage of Windows functionality. Go to http://www.microsoft.com for details.

Safety warning notice

Reduce the possibility of heat-related injuries or of overheating the computer by following the practices described.

⚠ **WARNING!** To reduce the possibility of heat-related injuries or of overheating the computer, do not place the computer directly on your lap or obstruct the computer air vents. Use the computer only on a hard, flat surface. Do not allow another hard surface, such as an adjoining optional printer, or a soft surface, such as pillows or rugs or clothing, to block airflow. Also, do not allow the AC adapter to come into contact with the skin or a soft surface, such as pillows or rugs or clothing, during operation. The computer and the AC adapter provided by HP comply with the user-accessible surface temperature limits defined by applicable safety standards.

Table of contents

1 Computer features 1

Product description 1

Front 2

Product specifications 3

2 Illustrated parts catalog 4

Computer major components 4

3 Routine care, drive guidelines, and disassembly preparation 6

Battery disconnection 6

Electrostatic discharge information 6

Generating static electricity 6

Preventing electrostatic damage to equipment 7

Personal grounding methods and equipment 7

Grounding the work area 8

Recommended materials and equipment 8

Routine care 9

Cleaning the lamps 9

Removing dirt and debris from your computer 10

Cleaning your computer with a disinfectant 10

Service considerations 11

Tool requirements 11

Screws 11

Cables and connectors 11

Lithium coin cell battery 12

4 Removal and replacement procedures 13

Preparation for disassembly 13

Solid-state drive 13

Cone ring cover 15

Dual pogo connector board 16

Single pogo connector board 17

Inner cover 19

Cone cover 20

Power button board 21

Battery 22

Lamp and heat sink assembly 23

Small daughter board near battery 25

Medium daughter board near the battery 25
Fan 26
Heat sink 27
WLAN module 29
System board 30
Camera assembly 32
Wireless antenna 34
Base plate 35
Base bracket 36
Base pogo board 36
Base USB power board 37
5 Calibrating a Captis device 39
How to calibrate a Captis device 39
When to calibrate a Captis device 41
6 Supplemental maintenance tool specifications 42
White reflection plate specifications 42
Mirror glass specifications 43
Weave fabrication cloth specifications 43
Upside down repair table specifications 44
7 Power cord set requirements 46
General requirements 46
Japanese power cord requirements 46
Country-specific requirements 46
8 Specifications 48
Index 50

1 Computer features

This information provides you with an overview of your computer's features.

Product description

This table provides detailed product information.

Table 1-1 Product components and their descriptions

Category	Description
Product Name	**HP Z Captis**
AI module	**NVIDIA® Jetson Xavier™** (32 GB)
Primary storage	**Solid-state drive, PCIe-Gen4 × 4, NVMe, M.2 2280**
	2 TB, triple layer cell (TLC)
Wireless	**Wireless Local Area Network (WLAN)** (select products only)
	Realtek 8852BE Wi-Fi 6E Bluetooth 5.3 WLAN
	Two WLAN antennas
Ports	USB Type-C® (data output only)
	USB Type-C (provides high-speed data transfer)
Sensor	Bosch BMI260 Inertial Measurement Unit (IMU)
	16-bit tri-axial gyroscope
	16-bit tri-axial accelerometer
Power requirements	**Battery** (long life, polymer)
	3 cell, 97.28 Whr
	6400 mAh
	Smart AC adapters (USB Type-C)
	230 W, power correction factor (PFC), slim, straight, 7.4 mm
	Power cord (select products only)
	C13, premium, straight
Serviceability	**End user replaceable parts**
	Cone
	Base
	Fabric magnets
	AC adapter
	Calibration plates
	USB Type-A-to-USB Type-C cable

Front

To identify the front panel components, use this illustration and table.

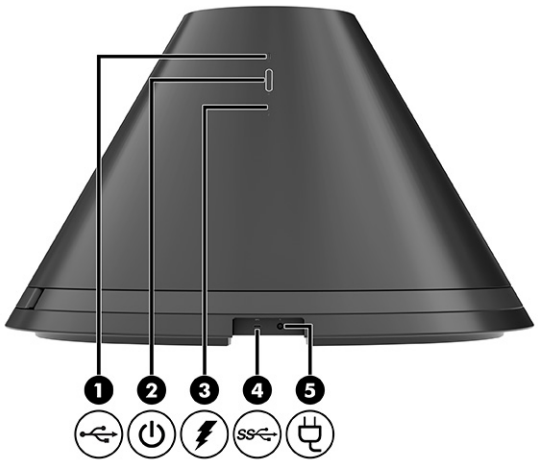

Table 1-2 Front components and their descriptions

Item	Icon	Component	Component
(1)		USB Type-C port	Connects a USB device that lets you transfer data to a USB storage device.
(2)		Power button	• When the scanner is off, press the button briefly to turn on the scanner. • When the scanner is on, press the button briefly to initiate Sleep. • When the scanner is in the Sleep state, press the button briefly to exit Sleep (select products only). • When the scanner is in Hibernation, press the button briefly to exit Hibernation. IMPORTANT: Pressing and holding down the power button results in the loss of unsaved information. If the scanner has stopped responding and shut down procedures are ineffective, press and hold the power button for at least 4 seconds to turn off the scanner.
(3)		Battery light	When AC power is connected: • White: The battery charge is greater than 90 percent. • Amber: The battery charge is from 0 to 90 percent. • Off: The battery is not charging. When AC power is disconnected (battery not charging): • Blinking amber: The battery has reached a low battery level. When the battery has reached a critical battery level, the battery light begins blinking rapidly. • Off: The battery is not charging.

Table 1-2 Front components and their descriptions (continued)

Item	Icon	Component	Component
(4)	SS	USB Type-C port	Connects a USB device, provides high-speed data transfer, and (for select products) charges small devices (such as a smartphone) when the scanner is on or in sleep mode. NOTE: Use a standard USB Type-A charging cable or cable adapter (purchased separately) when charging a small external device.
(5)		Power connector	Connects an AC adapter.

Product specifications

Read this section to learn where to find the technical specifications about your computer.

To find the QuickSpecs for your product, go to http://www.hp.com/go/quickspecs, and then select the **Search all QuickSpecs** link. Type your model name in the search box, and then select **Go**.

You can also go to http://www.hp.com/support, and follow the instructions to find your product. Select **Product Information**, and then select your computer specifications.

2 Illustrated parts catalog

Use this information to determine the spare parts that are available for the computer.

NOTE: HP continually improves and changes product parts. For complete and current information about supported parts for your computer, go to https://partsurfer.hp.com/partsurfer/, select your country or region, and then follow the on-screen instructions.

Computer major components

To identify the computer major components, use this illustration and table.

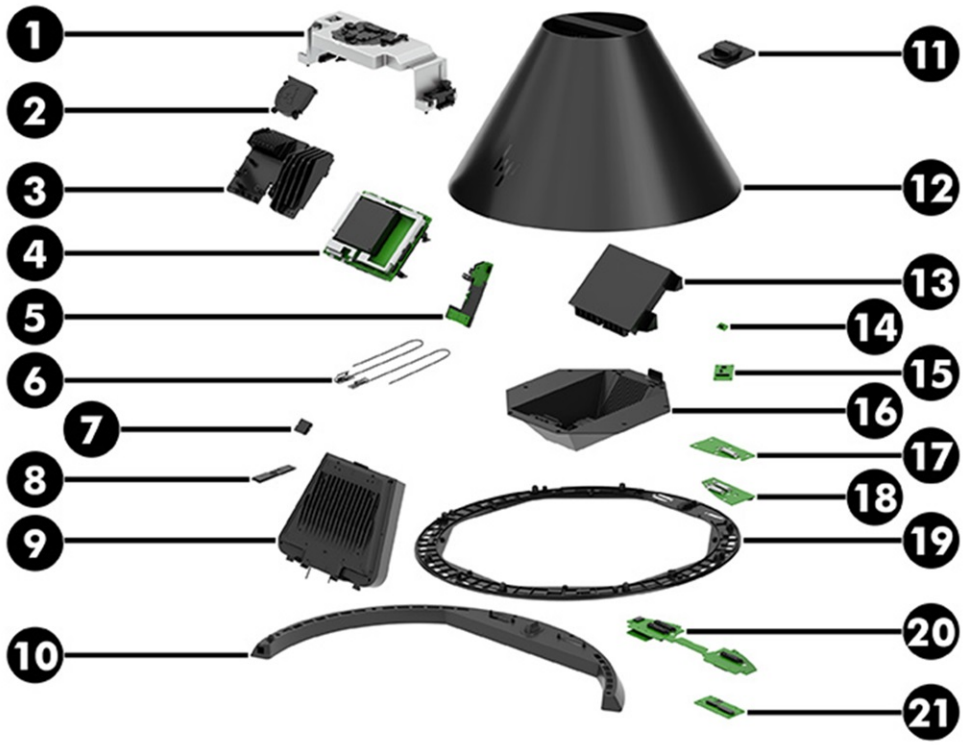

Table 2-1 Computer major components and their descriptions

Item	Description
(1)	Camera assembly
(2)	Fan
(3)	Heat sink
(4)	System board (includes processor)
(5)	Power button board
(6)	Wireless antennas

Table 2-1 Computer major components and their descriptions (continued)

Item	Description
(7)	**WLAN module** (Realtek 8852BE Wi-Fi 6E Bluetooth 5.3 WLAN)
(8)	**Solid-state drive** (2 TB)
(9)	**Lamp with heat sink**
(10)	**Base bracket**
(11)	**Camera cover**
(12)	**Cone**
(13)	**Battery**
(14)	**Small daughter board near battery**
(15)	**Medium daughter board near battery**
(16)	**Inner cone cover**
(17)	**Single pogo connector board, cone**
(18)	**Dual pogo connector board, cone**
(19)	**Cone outer ring cover**
(20)	**Base pogo board**
(21)	**Base USB power board**

3 Routine care, drive guidelines, and disassembly preparation

This information provides general service information for the computer. Adherence to the procedures and precautions is essential for proper service.

IMPORTANT: When the computer is plugged into an AC power source, DC voltage is always applied to the system board. You must disconnect the power cord from the power source before opening the computer to prevent electric shock, system board, or component damage.

Battery disconnection

To prevent component damage, be sure to disconnect the main system battery as soon as it is accessible.

The battery is located under the main cone cover. For more information, see Cone cover on page 20.

Electrostatic discharge information

A sudden discharge of static electricity from your finger or other conductor can destroy static-sensitive devices or microcircuitry. Often the spark is neither felt nor heard, but damage occurs.

An electronic device exposed to electrostatic discharge (ESD) might not appear to be affected at all and can work perfectly throughout a normal cycle. The device might function normally for a while, but it has been degraded in the internal layers, reducing its life expectancy.

Networks built into many integrated circuits provide some protection, but in many cases, the discharge contains enough power to alter device parameters or melt silicon junctions.

IMPORTANT: To prevent damage to the device when you are removing or installing internal components, observe these precautions:

- Keep components in their electrostatic-safe containers until you are ready to install them.
- Before touching an electronic component, discharge static electricity by using the guidelines described in this section.
- Avoid touching pins, leads, and circuitry. Handle electronic components as little as possible.
- If you remove a component, place it in an electrostatic-safe container.

Generating static electricity

This table shows how humidity affects the electrostatic voltage levels generated by different activities. A product can be degraded by 700 V of static electricity.

- Different activities generate different amounts of static electricity.
- Static electricity increases as humidity decreases.

Multiple electric components can be packaged in plastic tubes, trays, or polystyrene foam.

Table 3-1 Static electricity occurrence based on activity and humidity

	Relative humidity		
Event	**55%**	**40%**	**10%**
Walking across carpet	7,500 V	15,000 V	35,000 V
Walking across vinyl floor	3,000 V	5,000 V	12,000 V
Motions of bench worker	400 V	800 V	6,000 V
Removing DIPs (dual in-line packages) from plastic tube	400 V	700 V	2,000 V
Removing DIPs from vinyl tray	2,000 V	4,000 V	11,500 V
Removing DIPs from polystyrene foam	3,500 V	5,000 V	14,500 V
Removing bubble pack from PCB (printed circuit board)	7,000 V	20,000 V	26,500 V
Packing PCBs in foam-lined box	5,000 V	11,000 V	21,000 V

Preventing electrostatic damage to equipment

Many electronic components are sensitive to ESD. Circuitry design and structure determine the degree of sensitivity. The following packaging and grounding precautions are necessary to prevent static electricity damage to electronic components.

- To avoid hand contact, transport products in static-safe containers such as tubes, bags, or boxes.
- Protect all electrostatic parts and assemblies with conductive or approved containers or packaging.
- Keep electrostatic-sensitive parts in their containers until they arrive at static-free stations.
- Place items on a grounded surface before removing them from their container.
- Always be properly grounded when touching a sensitive component or assembly.
- Avoid contact with pins, leads, or circuitry.
- Place reusable electrostatic-sensitive parts from assemblies in protective packaging or conductive foam.

Personal grounding methods and equipment

Use this equipment to prevent static electricity damage to electronic components.

- **Wrist straps** are flexible straps with a maximum of 1 MΩ ±10% resistance in the ground cords. To provide proper ground, wear a strap snug against bare skin. Verify that the ground cord is connected and fits snugly into the banana plug connector on the grounding mat or workstation.
- **Heel straps/Toe straps/Boot straps** can be used at standing workstations and are compatible with most types of shoes or boots. On conductive floors or dissipative floor mats, use them on both feet with a maximum of 1 MΩ ±10% resistance between the operator and ground.

Table 3-2 **Static shielding protection levels**

Static shielding protection levels	
Method	**Voltage**
Antistatic plastic	1,500 V
Carbon-loaded plastic	7,500 V
Metallized laminate	15,000 V

Grounding the work area

To prevent static damage at the work area, use these precautions.

- Cover the work surface with approved static-dissipative material. Provide a wrist strap connected to the work surface and properly grounded tools and equipment.
- Use static-dissipative mats, foot straps, or air ionizers to give added protection.
- Handle electrostatic sensitive components, parts, and assemblies by the case or PCB laminate. Handle them only at static-free work areas.
- Turn off power and input signals before inserting and removing connectors or test equipment.
- Use fixtures made of static-safe materials when fixtures must directly contact dissipative surfaces.
- Keep work area free of nonconductive materials such as ordinary plastic assembly aids and polystyrene foam.
- Use field service tools, such as cutters, screwdrivers, and vacuums, that are conductive.

Recommended materials and equipment

HP recommends these materials and equipment to prevent static electricity.

- Antistatic tape
- Antistatic smocks, aprons, or sleeve protectors
- Conductive bins and other assembly or soldering aids
- Conductive foam
- Conductive tabletop workstations with ground cord of 1 MΩ ±10% resistance
- Static-dissipative table or floor mats with hard tie to ground
- Field service kits
- Static awareness labels
- Wrist straps and footwear straps providing 1 MΩ ±10% resistance
- Material handling packages
- Conductive plastic bags
- Conductive plastic tubes

- Conductive tote boxes
- Opaque shielding bags
- Transparent metallized shielding bags
- Transparent shielding tubes

Routine care

Use this information to properly care for your computer.

Cleaning the lamps

Use this information to safely clean the lamps on the scanner.

⚠ **CAUTION:** To prevent electric shock or damage to components, never clean a product while it is turned on or plugged in.

- Please do not touch the lamps with bare hands. Fingerprints can lessen image quality.
- If lamps do have dirt or fingerprints, take a small amount of water or the following cleaning solutions and gently apply only to the soiled area:
  - Distilled or pure water applied using clean gauze or Bemcot M-3II wipes, which shed few fibers
  - Dilute high-purity alcohol (ethanol or isopropanol) with water (30-50%) applied using clean gauze or Bemcot M-3II wipes
  - Water with a few drops of neutral detergent applied using clean gauze
  - Spectacle lens cleaner applied using a spectacle cleaning cloth
  - Optical lens cleaner applied using a lens cleaning cloth
- If dust becomes noticeable, gently dust using a duster.

IMPORTANT: When cleaning the lamps:

- To avoid scratches, do not clean the product daily.
- Do not attach products with adhesive, including post-it notes, cellophane tape, double-sided tape, or other adhesives.
- Do not use used cleaning cloths or wipes. Frequently changing the cloth and wiping only around the dirt is the key to prevent its spread.
- To avoid scratches, do not use excessive pressure when cleaning.
- Be sure to use a solvent-resistant cloth when using alcohol. Do not use tissues.
- To avoid damaging anti-reflective properties, do not use commercially-available lens cleaners, wet tissues, or cleaning alcohols, which contain additives such as surfactants, moisturizing ingredients, anti-static agents, anti-fogging agents, and preservatives. These nonvolatile additives remain on the lamp surface, resulting in decreased anti-reflective properties.
- Use liquid containing only volatile components, such as pure water or high-purity alcohol.

Removing dirt and debris from your computer

Here are the recommended steps to clean dirt and debris from your computer.

1. Wear disposable gloves made of latex (or nitrile gloves, if you are latex-sensitive) when cleaning the surfaces.
2. Turn off your device and unplug the power cord and other connected external devices. Remove any installed batteries from items such as wireless keyboards.

> ⚠ **CAUTION:** To prevent electric shock or damage to components, never clean a product while it is turned on or plugged in.

3. Moisten a microfiber cloth with water. The cloth should be moist, but not dripping wet.

> **IMPORTANT:** To avoid damaging the surface, avoid abrasive cloths, towels, and paper towels.

4. Wipe the exterior of the product gently with the moistened cloth.

> **IMPORTANT:** Keep liquids away from the product. Avoid getting moisture in any openings. If liquid makes its way inside your HP product, it can cause damage to the product. Do not spray liquids directly on the product. Do not use aerosol sprays, solvents, abrasives, or cleaners containing hydrogen peroxide or bleach that might damage the finish.

5. Start with the display (if applicable). Wipe carefully in one direction, and move from the top of the display to the bottom. Finish with any flexible cables, like power cord, keyboard cable, and USB cables.
6. Be sure that surfaces have completely air-dried before turning the device on after cleaning.
7. Discard the gloves after each cleaning. Clean your hands immediately after you remove the gloves.

See Cleaning your computer with a disinfectant on page 10 for recommended steps to clean the high-touch, external surfaces on your computer to help prevent the spread of harmful bacteria and viruses.

Cleaning your computer with a disinfectant

The World Health Organization (WHO) recommends cleaning surfaces, followed by disinfection, as a best practice for preventing the spread of viral respiratory illnesses and harmful bacteria.

After cleaning the external surfaces of your computer using the steps in Removing dirt and debris from your computer on page 10, you might also choose to clean the surfaces with a disinfectant. A disinfectant that is within HP's cleaning guidelines is an alcohol solution consisting of 70% isopropyl alcohol and 30% water. This solution is also known as rubbing alcohol and is sold in most stores.

Follow these steps when disinfecting high-touch, external surfaces on your computer:

1. Wear disposable gloves made of latex (or nitrile gloves, if you are latex-sensitive) when cleaning the surfaces.
2. Turn off your device and unplug the power cord and other connected external devices. Remove any installed batteries from items such as wireless keyboards.

> ⚠ **CAUTION:** To prevent electric shock or damage to components, never clean a product while it is turned on or plugged in.

3. Moisten a microfiber cloth with a mixture of 70% isopropyl alcohol and 30% water. The cloth should be moist, but not dripping wet.

CAUTION: Do not use any of the following chemicals or any solutions that contain them, including spray-based surface cleaners: bleach, peroxides (including hydrogen peroxide), acetone, ammonia, ethyl alcohol, methylene chloride, or any petroleum-based materials, such as gasoline, paint thinner, benzene, or toluene.

IMPORTANT: To avoid damaging the surface, avoid abrasive cloths, towels, and paper towels.

4. Wipe the exterior of the product gently with the moistened cloth.

IMPORTANT: Keep liquids away from the product. Avoid getting moisture in any openings. If liquid makes its way inside your HP product, it can cause damage to the product. Do not spray liquids directly on the product. Do not use aerosol sprays, solvents, abrasives, or cleaners containing hydrogen peroxide or bleach that might damage the finish.

5. Start with the display (if applicable). Wipe carefully in one direction, and move from the top of the display to the bottom. Finish with any flexible cables, like power cord, keyboard cable, and USB cables.

6. Be sure that surfaces have completely air-dried before turning the device on after cleaning.

7. Discard the gloves after each cleaning. Clean your hands immediately after you remove the gloves.

Service considerations

Keep these considerations in mind during the disassembly and assembly of the computer.

Tool requirements

Servicing the computer requires these tools.

- Jig (to protect the camera module)
- Torx T-15 screwdriver
- Phillips P1 screwdriver
- Nonconductive, nonmarking pry tool

Screws

The screws used in the computer are not interchangeable. They could have standard or metric threads and might be of different lengths.

If you use an incorrect screw during the reassembly process, it can damage the unit. HP strongly recommends that you keep all screws that you remove during disassembly with the removed part and then return them to their proper locations.

IMPORTANT: As you remove each subassembly from the computer, place it away from the work area to prevent damage.

Cables and connectors

Use this information to properly handle cables.

Apply only the tension required to seat or unseat the cables during insertion or removal from the connector. Handle cables by the connector whenever possible. In all cases, avoid bending or twisting the cables, and route the cables so that they cannot be caught or snagged by parts being removed or replaced.

IMPORTANT: When servicing this computer, be sure to place cables in their proper location during the reassembly process. Improper cable placement can damage the computer.

Lithium coin cell battery

The battery that comes with the computer provides power to the real-time clock and has a minimum lifetime of approximately three years.

The lithium coin cell battery is non-replaceable.

WARNING! This computer contains a lithium battery. There is a risk of fire and chemical burn if the battery is handled improperly. Do not disassemble, crush, puncture, short external contacts, dispose of in water or fire, or expose it to temperatures higher than 140°F (60°C). Do not attempt to recharge the battery.

NOTE: Do not dispose of batteries, battery packs, and accumulators with general household waste. To forward them to recycling centers or proper disposal, use the public collection system or return them to HP, their authorized partners, or their agents.

4 Removal and replacement procedures

Adherence to these procedures and precautions is essential for proper service. After completing all necessary removal and replacement procedures, run the Diagnostics utility to verify that all components operate properly.

NOTE: Not all features listed in this guide are available on all computers.

NOTE: HP continually improves and changes product parts. For complete and current information about supported parts for your computer, go to https://partsurfer.hp.com/partsurfer/, select your country or region, and then follow the on-screen instructions.

NOTE: The HP Support YouTube Channel (in English) has videos that provide step-by-step removal and replacement instructions for many common parts and models.

Preparation for disassembly

Use this information to properly prepare to disassemble and reassemble the computer.

See Routine care, drive guidelines, and disassembly preparation on page 6 for initial safety procedures.

1. Turn off the computer. If you are unsure whether the computer is off or in Hibernation, turn the computer on, and then shut it down through the operating system.

   IMPORTANT: Turn off the computer before disconnecting any cables.

   Regardless of the power state, voltage is always present on the system board as long as the system is plugged into an active AC outlet. In some systems, the cooling fan is on even when the computer is in the Standby or Suspend modes. Always disconnect the power cord before servicing a unit.

2. Disconnect the power from the computer by unplugging the power cord from the computer.
3. Disconnect all external devices from the computer

CAUTION: Beware of sharp edges inside the chassis.

NOTE: During disassembly, label each cable as you remove it, and note its position and routing. Keep all screws with the removed components.

Solid-state drive

To remove the solid-state drive (SSD), use these procedures.

Before removing the SSD, follow this step:

- Prepare the computer for disassembly (see Preparation for disassembly on page 13).

Remove the SSD:

1. Position the cone upside down.

2. Remove the two Phillips M3.0 × 6.0 screws **(1)** from the SSD cover.
3. Use the tab **(2)** to pull the cover toward the inside of the cone, and then remove the cover **(3)**.

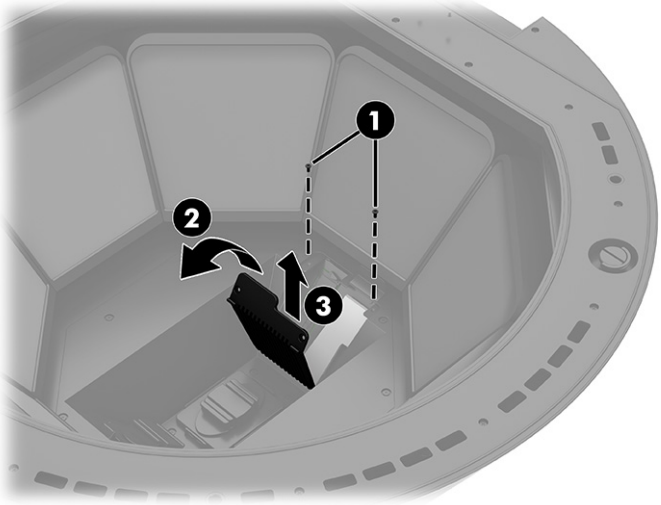

4. Turn the SSD release latch **(1)**, and then pull the SSD **(2)** out of the socket.

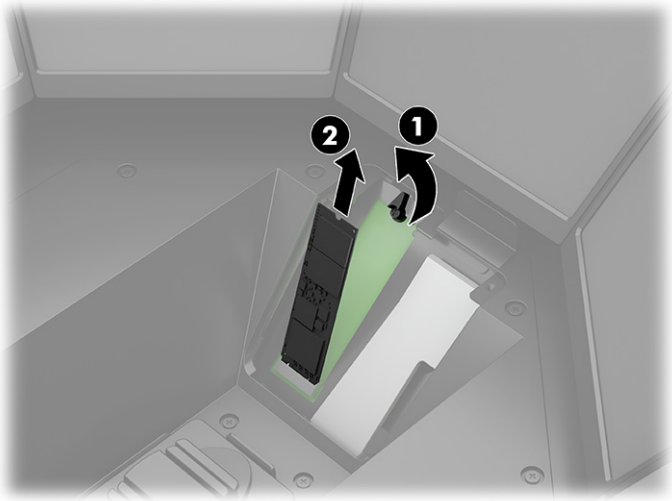

5. When installing a new SSD, be sure that a thermal pad is installed on the SSD.

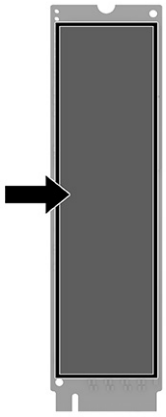

To install the SSD, reverse the removal procedure.

Cone ring cover

To remove the cone ring cover, use these procedures.

Before removing the cone ring cover, follow this step:

- Prepare the computer for disassembly (see Preparation for disassembly on page 13).

Remove the cone ring cover:

1. Position the cone upside down.
2. Remove 8 Phillips 4.0 × 8.0 screws **(1)**.
3. Remove 15 Phillips 3.0 × 6.0 screws **(2)**.
4. Lift the cover **(3)** of the cone.

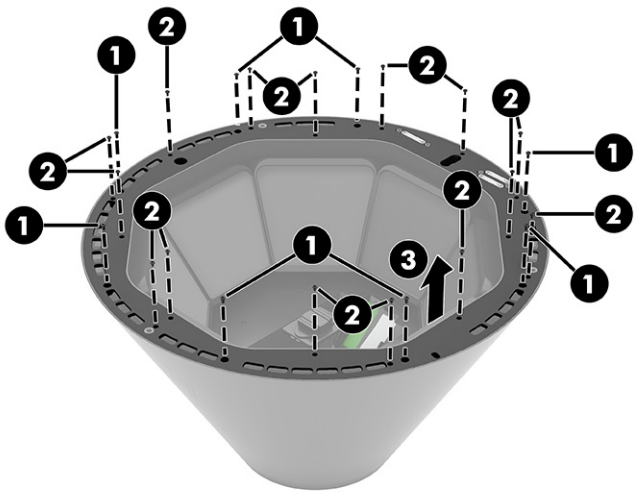

To install a cone ring cover, reverse the removal procedure.

Dual pogo connector board

To remove the dual pogo connector board, use these procedures.

IMPORTANT: Only remove the dual pogo connector board to replace it. Do not remove this board when accessing other internal components.

Before removing the dual pogo connector board, follow these steps:

1. Prepare the computer for disassembly (Preparation for disassembly on page 13).
2. Remove the cone ring cover (Cone ring cover on page 15).

Remove the dual pogo connector board:

1. Remove the four Phillips M3.0 × 13.0 screws **(1)**, and then rotate the bottom of the board **(2)** up until it sits at an angle.

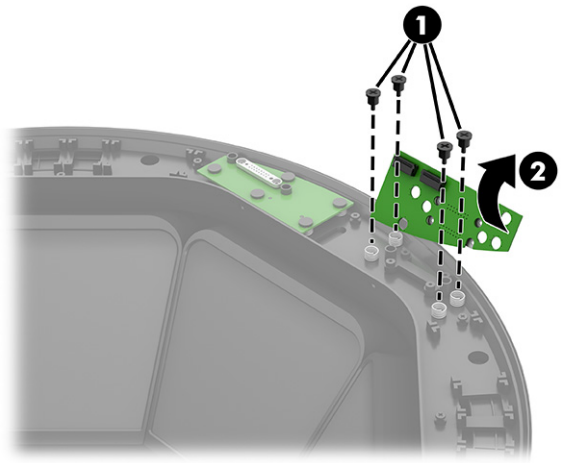

2. Disconnect both cables from the bottom of the board.

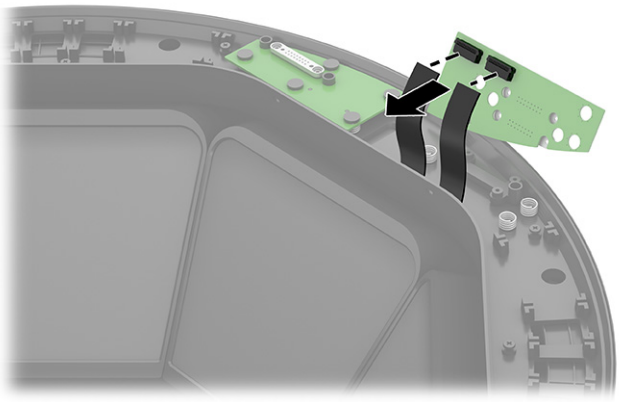

3. Note the installed locations of the springs under the pogo boards. Be sure the four springs on the left are installed under the dual pogo connector board.

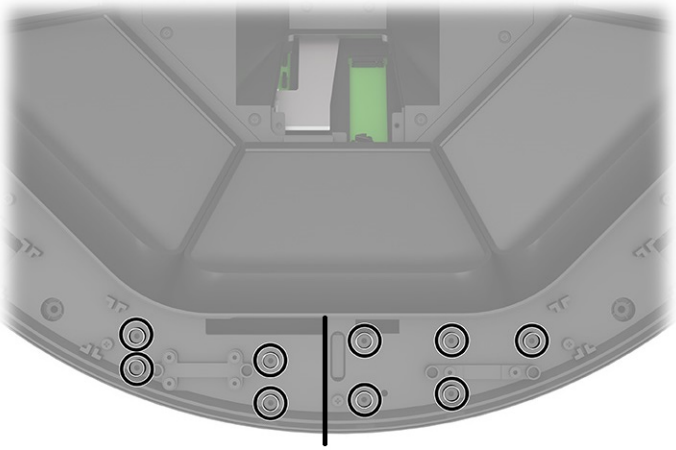

To install a dual pogo connector board, reverse the removal procedures.

Single pogo connector board

To remove the single pogo connector board, use these procedures.

IMPORTANT: Only remove the single pogo connector board to replace it. Do not remove this board when accessing other internal components.

Before removing the single pogo connector board, follow this step:

1. Prepare the computer for disassembly (see Preparation for disassembly on page 13).
2. Remove the cone ring cover (Cone ring cover on page 15).

Remove the single pogo connector board:

1. Remove the five Phillips M3.0 × 13.0 screws **(1)**, and then rotate the bottom of the board **(2)** up until it sits at an angle.

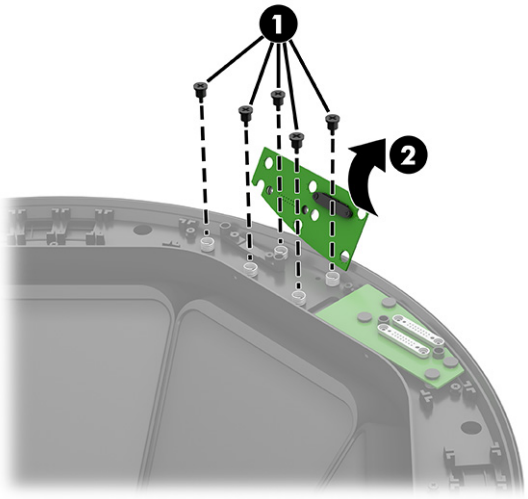

2. Remove the two Phillips 2.0 × 3.0 screws **(1)** from the connector bracket on the bottom of the board, and then remove the bracket **(2)**.
3. Disconnect the cable **(3)** from the board.

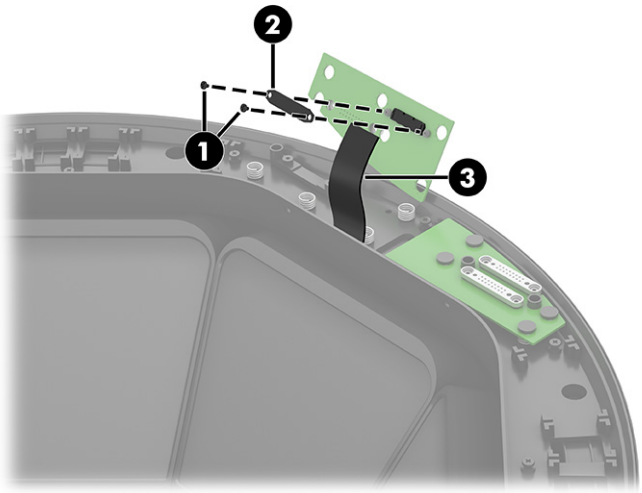

4. Note the installed locations of the springs under the pogo boards. Be sure the right five springs are installed under the single pogo connector board.

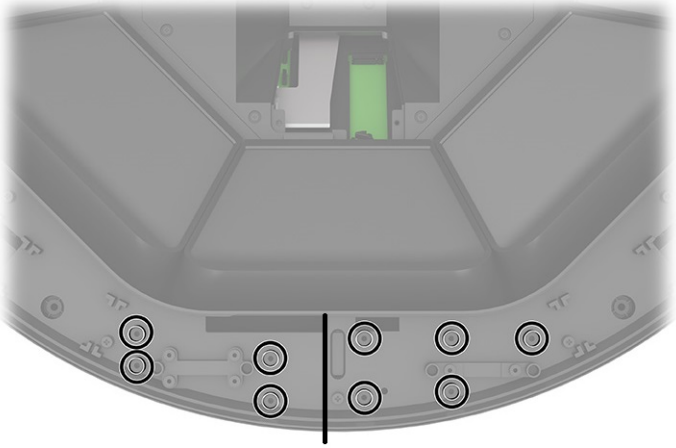

To install a single pogo connector board, reverse the removal procedure.

Inner cover

To remove the inner cover, use these procedures.

Before removing the inner cover, follow this step:

- Prepare the computer for disassembly (see Preparation for disassembly on page 13).

Remove the inner cover:

1. Position the cone upside down.
2. Remove the 12 Phillips M3.0 × 6.0 screws **(1)** that secure the inner cover to the computer.
3. Lift up on the handles **(2)** around the camera to remove the inner cover.

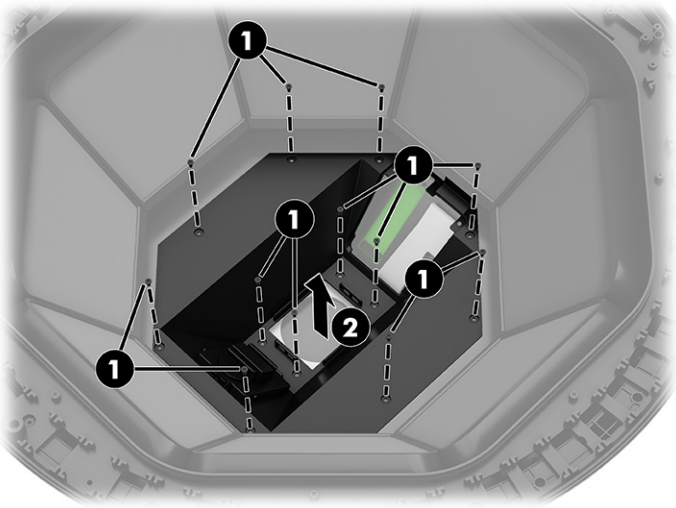

To install the inner cover, reverse the removal procedure.

Cone cover

To remove the main cone cover, use these procedures.

Before removing the cone cover, follow these steps:

1. Prepare the computer for disassembly (see Preparation for disassembly on page 13).
2. Remove the cone ring cover (Cone ring cover on page 15).
3. Remove the inner cover (Inner cover on page 19).

Remove the cone cover:

NOTE: The cables thread through the inner chassis onto the cone. Be sure to push these cables through the inner chassis during cone cover removal. If you remove the cone without pushing the cables through the inner chassis, you might damage the power button assembly.

1. Disconnect the two cables from the board on the inside of the cone.

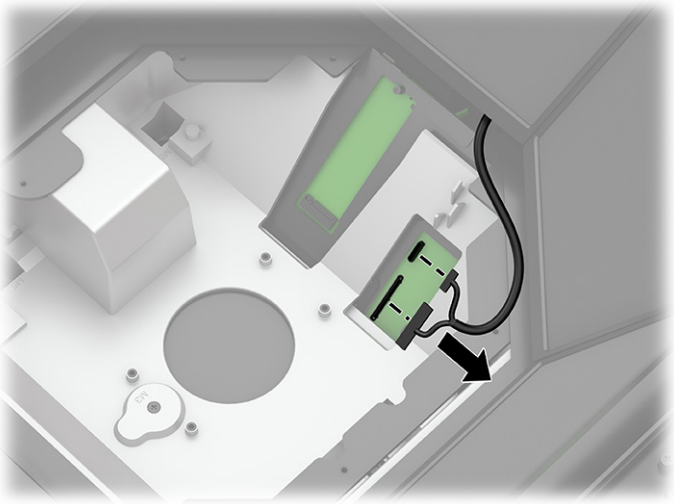

2. Remove the four Phillips M5.0 × 12.0 screws **(1)** from the bottom of the inside of the cone.

3. Place your fingers in the space under the lamps, and then lift the internal cone assembly **(2)** up and out of the cone cover.

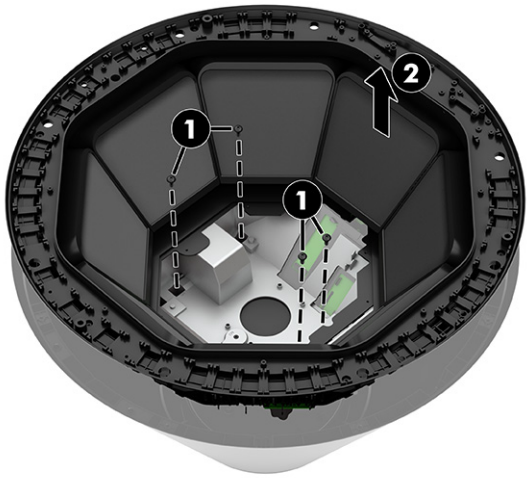

To install the cone cover, reverse the removal procedure.

Power button board

To remove the power button board, use these procedures.

Before removing the power button board, follow these steps:

1. Prepare the computer for disassembly (see Preparation for disassembly on page 13).
2. Remove the cone ring cover (Cone ring cover on page 15).
3. Remove the inner cover (Inner cover on page 19).
4. Remove the main cone cover (see Cone cover on page 20).

Remove the power button board:

1. Position the main cone cover upside down so that you can access the inside.
2. Remove the four Phillips M3.0 × 6.0 screws **(1)**.

3. Remove the board (2) from the cone cover.

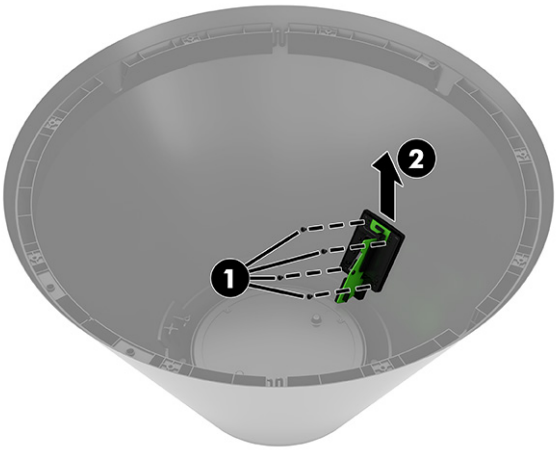

To install a power button board, reverse the removal procedure.

Battery

To remove the battery, use these procedures.

⚠ **WARNING!** The computer contains a lithium-polymer battery. There is a risk of fire and burns if the battery is not handled properly. To reduce the risk of personal injury:

- Do not attempt to recharge the battery.
- Do not expose to temperatures higher than 60°C (149°F).
- Do not disassemble, crush, puncture, short external contacts, or dispose of in fire or water.
- Replace the battery only with the HP spare part that is designated for this product.

NOTE: You can extend the lifetime of the lithium battery by plugging the computer into an AC outlet. The lithium battery is used only when the computer is not connected to AC power.

HP encourages customers to recycle used electronic hardware, HP original print cartridges, and rechargeable batteries. For more information about recycling programs, go to http://www.hp.com/recycle.

Before removing the battery, follow these steps:

1. Prepare the computer for disassembly (see Preparation for disassembly on page 13).
2. Remove the cone ring cover (Cone ring cover on page 15).
3. Remove the inner cover (Inner cover on page 19).
4. Remove the main cone cover (see Cone cover on page 20).

Remove the battery:

1. Position the interior cone assembly upright.
2. Disconnect the battery cable **(1)** from the system board.
3. Pull the battery cable **(2)** out from under the metal frame.
4. Remove the four Phillips M3.0 × 6.0 screws **(3)** from the battery, and then remove the battery **(4)**.

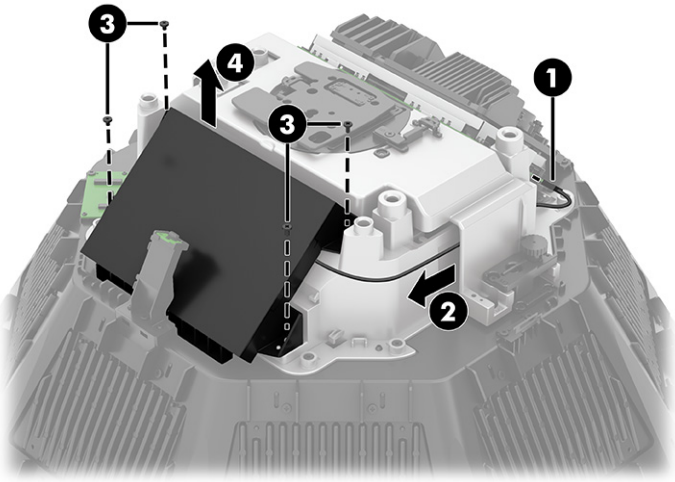

To install a battery, reverse the removal procedures.

Lamp and heat sink assembly

To remove the lamp and heat sink assembly, use these procedures.

Before removing the lamp and heat sink assembly, follow these steps:

1. Prepare the computer for disassembly (see Preparation for disassembly on page 13).
2. Remove the cone ring cover (Cone ring cover on page 15).
3. Remove the inner cover (Inner cover on page 19).
4. Remove the main cone cover (see Cone cover on page 20).

Remove the lamp and heat sink assembly:

NOTE: You can use the same procedure to remove all lamp and heat sink assemblies.

1. From the outside of the cone metal body, remove the four Phillips M3.0 × 6.0 screws that secure the lamp heat sink.

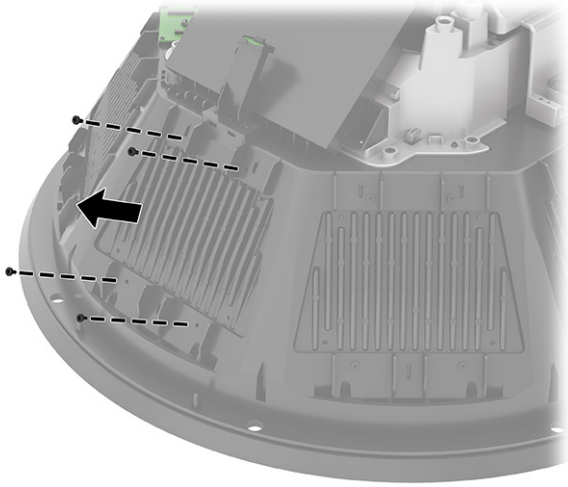

2. Position the internal cone assembly upside down.
3. Remove the two Phillips M3.0 × 6.0 screws **(1)** from the bottom of the lamp heat sink.
4. Remove the eyelet cable **(2)** from the removed screw location. This eyelet cable connects to the lamp next to the lamp you are removing.
5. Disconnect the two cables **(3)** from the lamp.
6. Remove the Phillips M3.0 × 6.0 screw **(4)** that secures the eyelet cable to the lamp on the other side of the lamp you are removing. This is the eyelet cable for the lamp you are removing.
7. Remove the eyelet cable **(5)** from the assembly you are removing, and then remove the lamp and heat sink assembly.

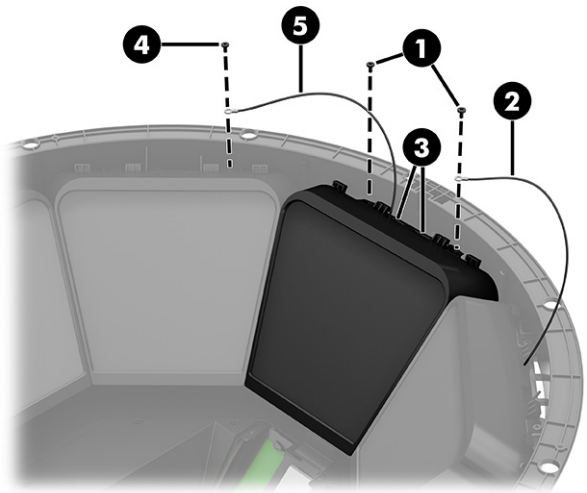

To replace a lamp and heat sink assembly, reverse the removal procedures.

Small daughter board near battery

To remove the small daughter board near the battery, use these procedures.

Before removing the small daughter board, follow these steps:

1. Prepare the computer for disassembly (see Preparation for disassembly on page 13).
2. Remove the cone ring cover (Cone ring cover on page 15).
3. Remove the inner cover (Inner cover on page 19).
4. Remove the main cone cover (see Cone cover on page 20).

Remove the small daughter board:

1. Position the internal cone assembly upright.
2. Disconnect cable from the daughter board **(1)** to the left of this board.
3. Remove the cable from clips **(2)** on the board holder.
4. Remove the Phillips M3.0 × 6.0 screw **(3)** from the board holder.
5. Remove the board and holder assembly **(4)**.

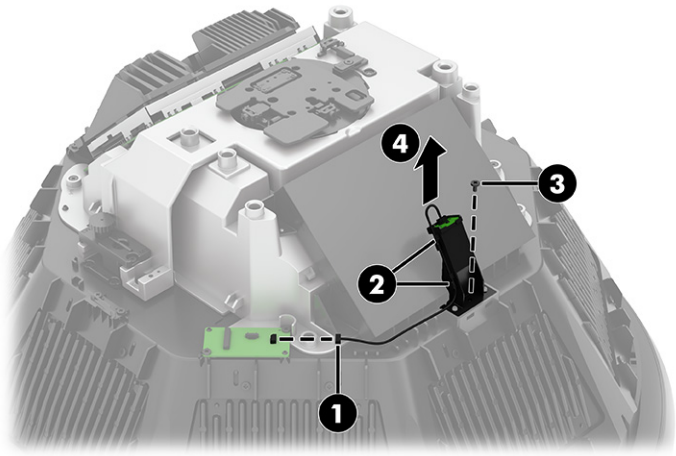

To install a small daughter board, reverse the removal procedure.

Medium daughter board near the battery

To remove the medium daughter board near the battery, use these procedures.

Before removing the medium daughter board, follow these steps:

1. Prepare the computer for disassembly (see Preparation for disassembly on page 13).
2. Remove the cone ring cover (Cone ring cover on page 15).
3. Remove the inner cover (Inner cover on page 19).

4. Remove the main cone cover (see Cone cover on page 20).

Remove the medium daughter board:

1. Position the internal cone assembly upright.
2. Disconnect the three cables **(1)** from the board.
3. Remove the two Phillips M3.0 × 6.0 screws **(2)** from the board.
4. Remove the board **(3)**.

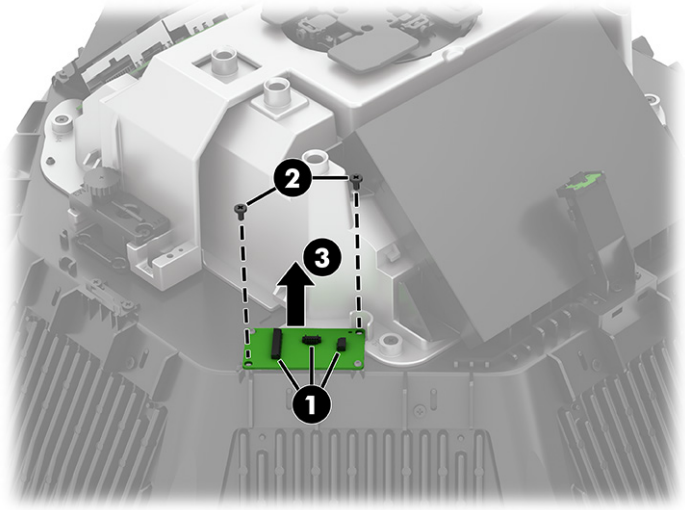

To replace a medium daughter board, reverse the removal procedures.

Fan

To remove the fan, use these procedures.

Before removing the fan, follow these steps:

1. Prepare the computer for disassembly (see Preparation for disassembly on page 13).
2. Remove the cone ring cover (Cone ring cover on page 15).
3. Remove the inner cover (Inner cover on page 19).
4. Remove the main cone cover (see Cone cover on page 20).

Remove the fan:

1. Position the interior cone assembly upright.
2. Disconnect the fan cable **(1)** from the system board.
3. Remove the three Phillips M2.5 × 4.0 screws **(2)** from the fan.

4. Remove the fan **(3)** from the heat sink.

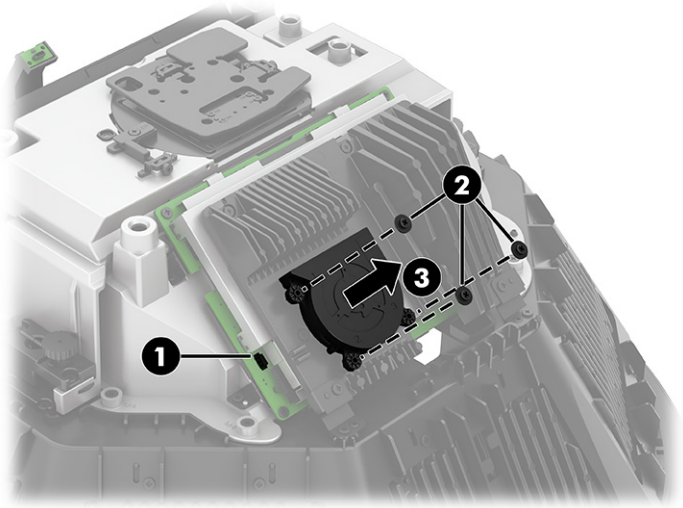

To install a fan, reverse the removal procedure.

Heat sink

To remove the heat sink, use these procedures.

Before removing the heat sink, follow these steps:

1. Prepare the computer for disassembly (see Preparation for disassembly on page 13).
2. Remove the cone ring cover (Cone ring cover on page 15).
3. Remove the inner cover (Inner cover on page 19).
4. Remove the main cone cover (see Cone cover on page 20).

Remove the heat sink:

1. Position the interior cone assembly upright.
2. Disconnect the fan cable from the system board **(1)**.
3. Remove the four Phillips M3.0 × 30.0 screws **(2)** from the heat sink.
4. Remove the two Phillips M3.0 × 6.0 screws **(3)** from the brackets at the bottom of the heat sink.
5. Remove the heat sink **(4)** from the system board.

NOTE: Note the locations of the thermal pads attached to the heat sink, and replace any pads that fall off.

NOTE: The thermal paste might cause the system on module (SOM) to come off with the heat sink.

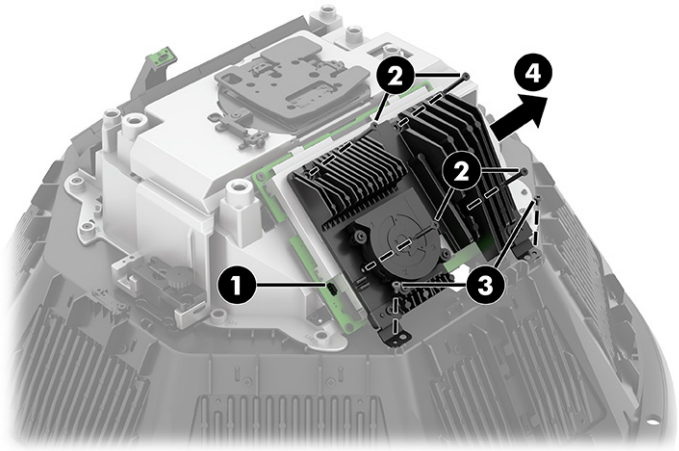

6. Pull the SOM off the system board.

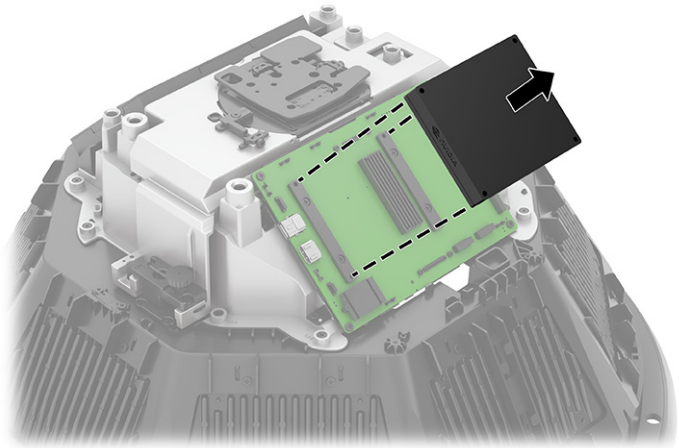

7. When installing the SOM, be sure to align the connectors on the SOM with the connectors on the system board.

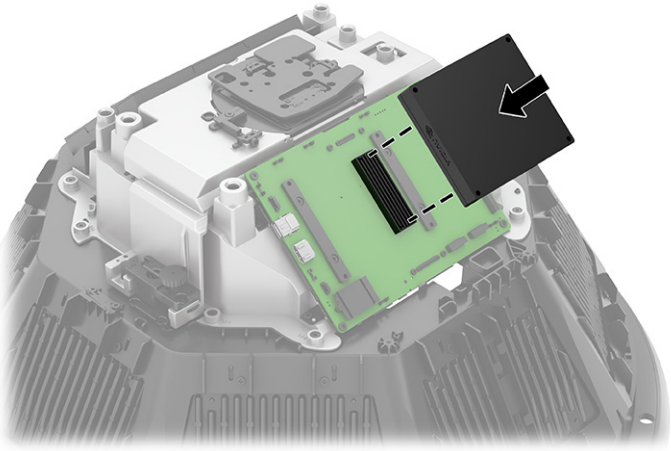

8. If necessary, pull the heat sink EMI shield away from the system board to remove it.

NOTE: Use care when removing the EMI shield from the clips. The shield bends very easily.

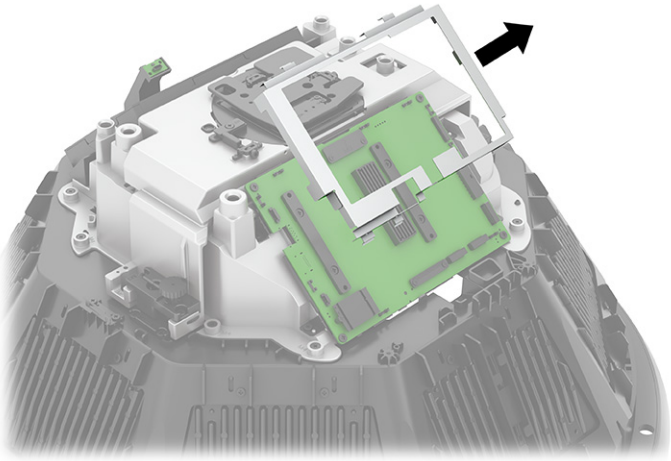

To install a heat sink, reverse the removal procedures.

WLAN module

To remove the WLAN module, use this procedure and illustration.

IMPORTANT: To prevent an unresponsive system, replace the wireless module only with a wireless module authorized for use in the computer by the governmental agency that regulates wireless devices in your country or region. If you replace the module and then receive a warning message, remove the module to restore device functionality, and then contact technical support.

Before removing the WLAN module, follow these steps:

1. Prepare the computer for disassembly (see Preparation for disassembly on page 13).
2. Remove the cone ring cover (Cone ring cover on page 15).
3. Remove the inner cover (Inner cover on page 19).
4. Remove the main cone cover (see Cone cover on page 20).

Remove the WLAN module:

1. Position the interior cone assembly upright.
2. Carefully disconnect the two antenna cables **(1)** from the module.

   The #1 WLAN antenna cable connects to the WLAN module #1 Main terminal. The #2 WLAN antenna cable connects to the WLAN module #2 Aux terminal.
3. Remove the Phillips M2.0 × 3.0 screw **(2)** that secures the WLAN module to the system board.
4. Pull the module **(3)** out of the socket.

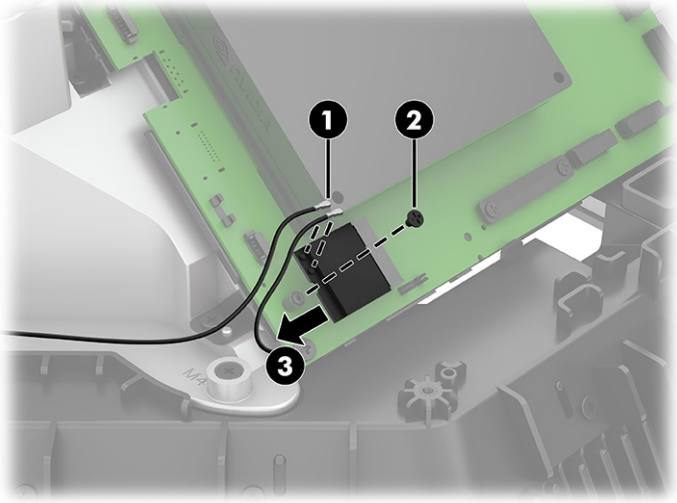

To replace a WLAN module, reverse the removal procedures.

NOTE: The WLAN module is designed with a notch to prevent incorrect insertion.

System board

To remove the system board, use these procedures.

Before removing the system board, follow these steps:

1. Prepare the computer for disassembly (see Preparation for disassembly on page 13).
2. Remove the cone ring cover (Cone ring cover on page 15).
3. Remove the inner cover (Inner cover on page 19).
4. Remove the main cone cover (see Cone cover on page 20).

5. When replacing the system board, be sure to remove the following parts from the defective system board and install them on the replacement system board:
    - Fan (see Fan on page 26
    - Heat sink (see Heat sink on page 27
    - WLAN module (see WLAN module on page 29

Remove the system board:

1. Position the interior cone assembly upright.
2. Remove the two Phillips M2.0 × 2.5 screws **(1)** from each connector bracket on the system board, and then remove the brackets **(2)**.
3. Remove the Phillips M3.0 × 6.0 screw **(3)** from each corner of the system board.
4. Remove the eyelet cable **(4)** from each bottom corner of the system board.

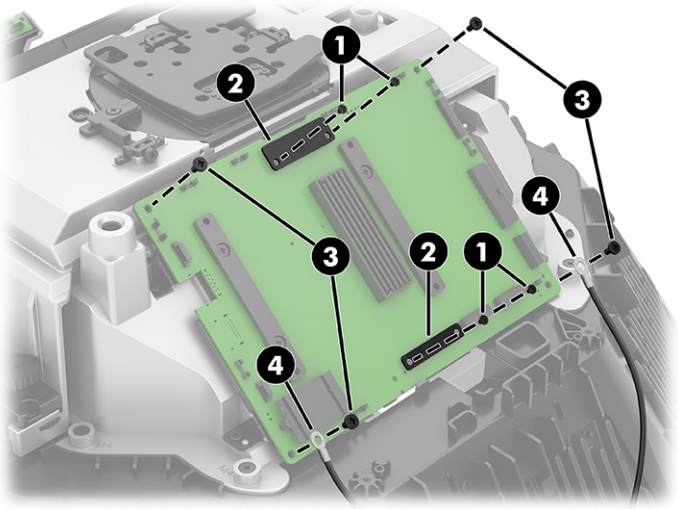

5. Disconnect the cables from the system board connectors as shown in the following illustration.

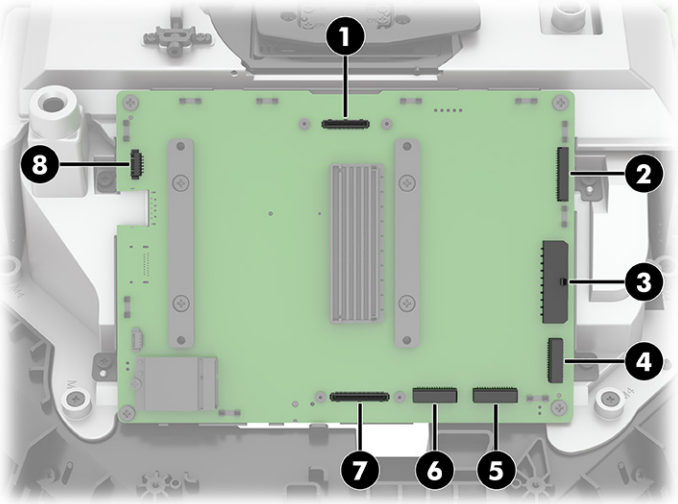

6. Remove the two Phillips M3.0 × 6.0 screws **(1)** from each bracket on the system board, and then remove the brackets **(2)**.
7. Remove the system board **(3)**.

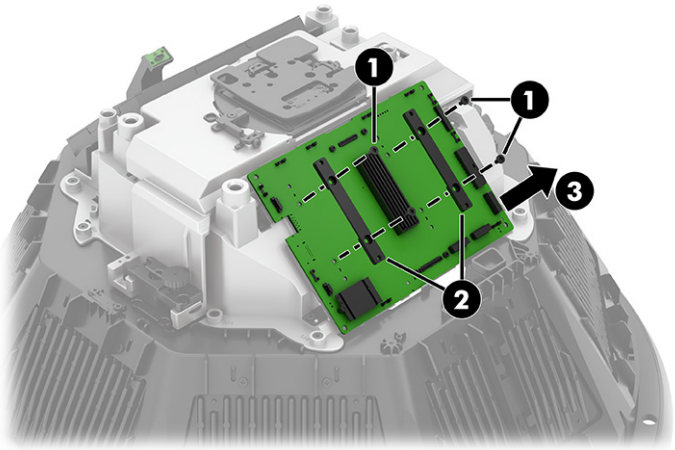

To install the system board, reverse the removal procedures.

Camera assembly

To remove the camera assembly, use these procedures.

Before removing the camera assembly, follow these steps:

1. Prepare the computer for disassembly (see Preparation for disassembly on page 13).
2. Remove the cone ring cover (Cone ring cover on page 15).
3. Remove the inner cover (Inner cover on page 19).
4. Remove the main cone cover (see Cone cover on page 20).
5. Remove the heat sink (see Heat sink on page 27).

Remove the camera assembly:

1. Position the interior cone assembly upside down.

2. Remove the Phillips M3.0 × 6.0 screw that secures the camera assembly from the bottom.

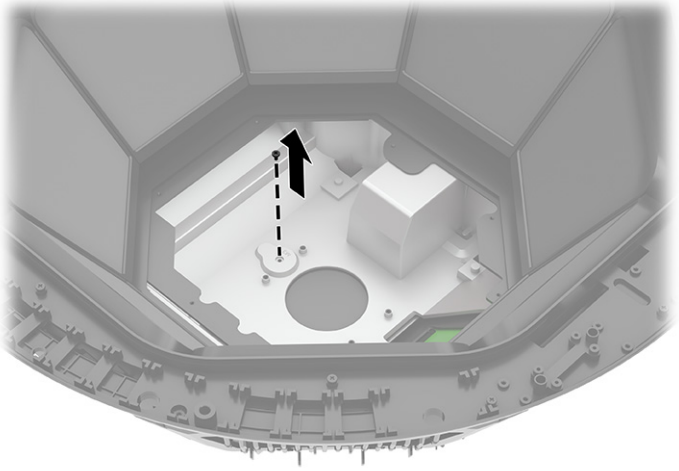

3. Position the interior cone assembly upright.
4. Remove the two Phillips M2.0 × 2.5 screws **(1)** from the camera connector bracket on the system board, and then remove the bracket **(2)**.
5. Disconnect the camera cable from the system board connector **(3)**.

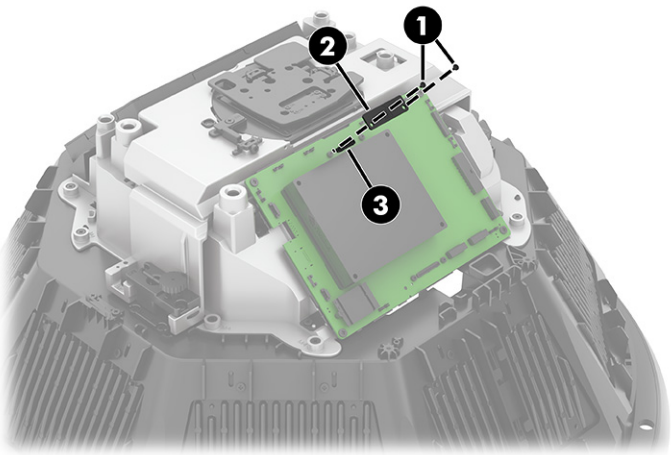

6. Remove the four Phillips M3.0 × 6.0 screws **(1)** and the two Phillips M6.0 × 12.0 screws **(2)** from the camera assembly.

7. Lift the camera assembly **(3)** off the cone.

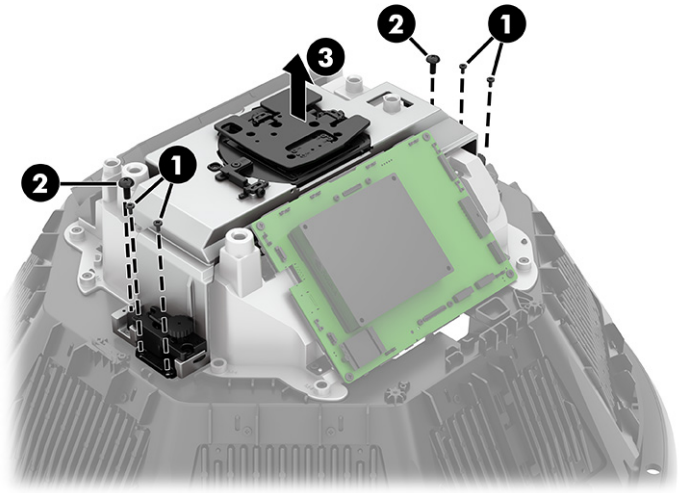

To install a camera assembly, reverse the removal procedures.

Wireless antenna

To remove the wireless antenna, use these procedures.

Before removing the wireless antenna, follow these steps:

1. Prepare the computer for disassembly (see Preparation for disassembly on page 13).
2. Remove the cone ring cover (Cone ring cover on page 15).
3. Remove the inner cover (Inner cover on page 19).
4. Remove the main cone cover (see Cone cover on page 20).
5. Remove the heat sink (see Heat sink on page 27).

Remove the wireless antenna:

1. Position the interior cone assembly upright.
2. Disconnect the antenna cables **(1)** from the WLAN module.
3. Remove the cables **(2)** from their routing path along the cone.
4. Remove the two Phillips M3.0 × 6.0 screws **(3)** from each antenna.

5. Remove the antennas and cables **(4)** from both sides of the cone.

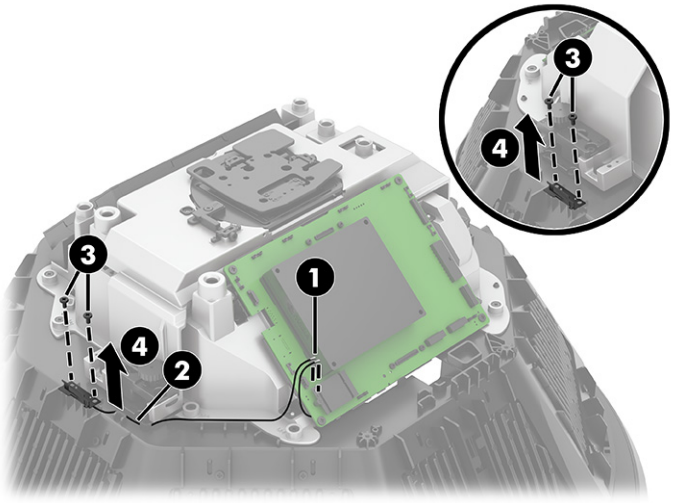

To install a wireless antenna, reverse the removal procedures.

Base plate

To remove the base plate, use these procedures.

Before removing the base plate, follow this step:

- Prepare the computer for disassembly (see Preparation for disassembly on page 13).

Remove the base plate:

1. Position the base upside down.
2. Remove the four Torx T15 screws **(1)**, and the remove the base plate **(2)**.

NOTE: The base plate remains connected to the base by a cable.

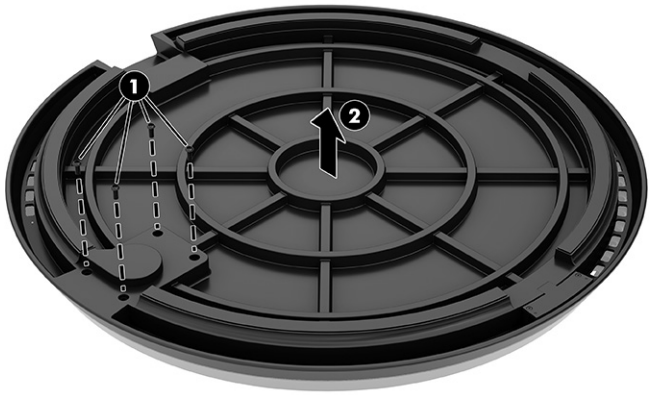

To install the base plate, reverse the removal procedure.

Base bracket

To remove the base bracket, use these procedures.

Before removing the base bracket, follow these steps:

1. Prepare the computer for disassembly (see Preparation for disassembly on page 13).
2. Remove the base plate (see Base plate on page 35).

NOTE: The base plate remains connected to the base by a cable.

Remove the base bracket:

1. Position the base upright.
2. Remove the two Phillips M4.0 × 11.0 screws **(1)** and the three Phillips 3.0 × 6.0 screws **(2)** from the bracket.
3. Remove the bracket **(3)** from the base.

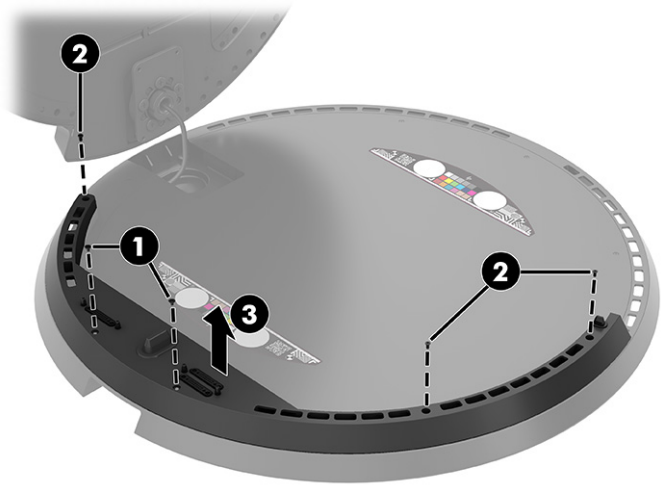

To install the base bracket, reverse the removal procedure.

Base pogo board

To remove the base pogo board, use these procedures.

Before removing the base pogo board, follow these steps:

1. Prepare the computer for disassembly (see Preparation for disassembly on page 13).
2. Remove the base plate (see Base plate on page 35).
3. Remove the base bracket (see Base bracket on page 36).

Remove the base pogo board:

1. Remove the four Phillips P3.0 × 6.0 screws **(1)** from the board.

2. Turn the board **(2)** upside down with the cables still connected to the bottom.

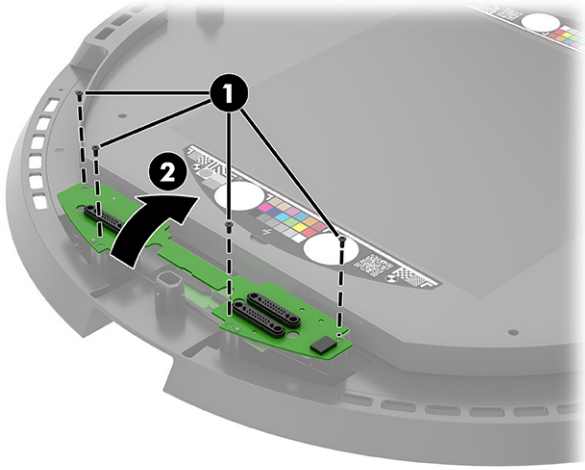

3. Remove the two Phillips M2.0 × 2.5 screws **(1)** from the connector bracket on the board, and then remove the bracket **(2)**.
4. Disconnect the cable from the connector **(3)** under the bracket, and then disconnect the remaining three cables **(4)** from the board.

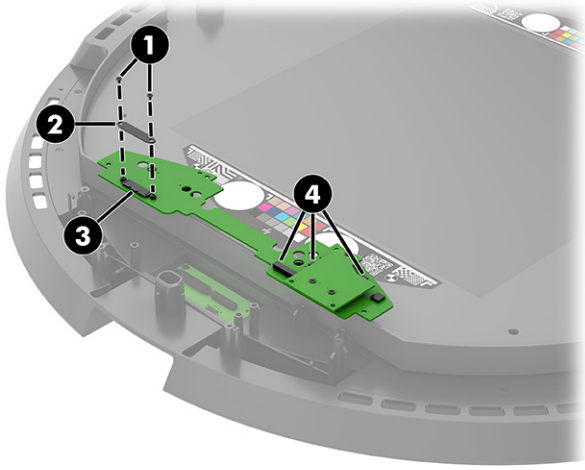

To install the base pogo board, reverse the removal procedure.

Base USB power board

To remove the base USB power board, use these procedures.

Before removing the base USB power board, follow these steps:

1. Prepare the computer for disassembly (see Preparation for disassembly on page 13).
2. Remove the base plate (see Base plate on page 35).
3. Remove the base bracket (see Base bracket on page 36).

4. Remove the base pogo board (see Base pogo board on page 36).

Remove the base USB power board:

1. Remove the four Phillips M3.0 × 6.0 screws **(1)** from the board.
2. Remove the board **(2)**.

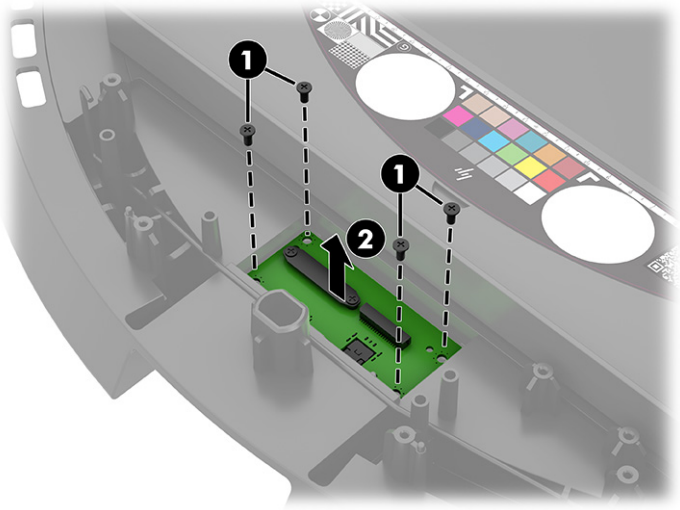

3. Remove the two Phillips M2.0 × 2.5 screws **(1)** from the connector bracket, and then remove the bracket **(2)**.
4. Disconnect the cable from the connector **(3)** under the bracket and the cable from the other connector **(4)** on the board.

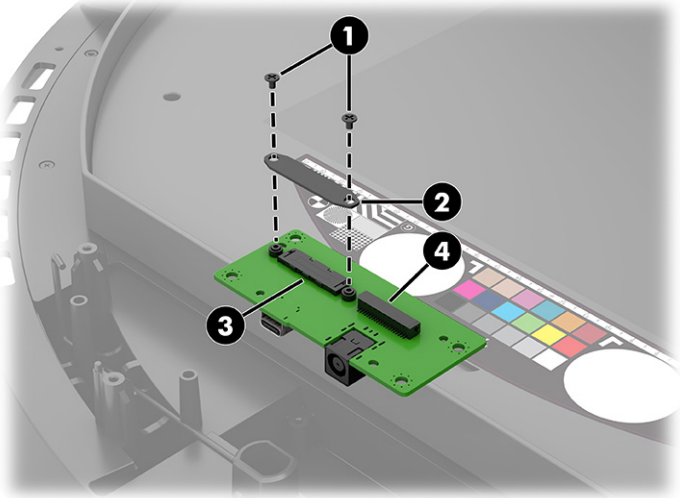

To install the base USB power board, reverse the removal procedure.

5 Calibrating a Captis device

The sections explain how and when to calibrate the scanner.

How to calibrate a Captis device

To calibrate the scanner, use these procedures.

You need the following materials to calibrate a Captis device:

- 10 pieces of non-glossy printer paper
- 6 × 6 inch or larger fabric sample

Calibration should work on any modern operating system (e.g. Windows, macOS or Ubuntu). A web browser is required.

Make sure the Captis is on and the power LED is breathing. Connect your host computer to the Captis and navigate to `http://192.168.55.1`. This is the default IP for the Captis.

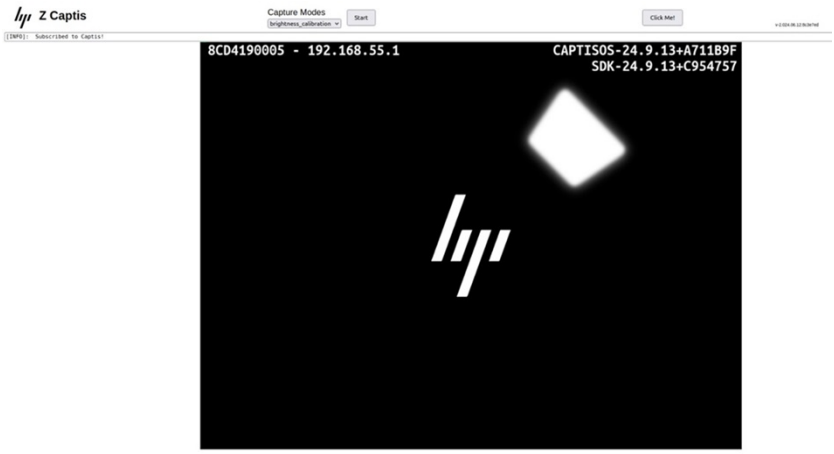

Use the drop-down menu at the top right of the viewer to run the calibration programs.

captis_test

Tests all basic hardware functionalities as accessible on the Captis. It does not modify any files on the Captis device, it is merely a diagnostic tool.

If a green **PASS** screen appears in the browser window, then the basic hardware functionalities of the Captis device are OK.

polarizer_alignment

Aligns the polarized lens in front of the camera with the polarized films on the light panels and on the backlight.

Before running this test, put the stack of ten non-glossy pieces of printer paper (stacked evenly, so that very little light gets through) on the center of the sample tray. Use the four included magnets to make sure the paper does not move when closing the sample tray.

This test should not fail, but if it does fail:

1. Be sure the lens cap is removed.
2. Be sure the stack of printer paper is in the sample tray.

brightness_calibration

Calibrates the light panels so that a step higher brightness in the software produces the same step higher on the LEDs.

Before running this test, put the stack of 10 non-glossy pieces of printer paper (stacked evenly, so that very little light gets through) on the center of the sample tray. Use the four included magnets to make sure the paper does not move when closing the sample tray.

This test should not fail, but if it does fail:

1. Be sure the lens cap is removed.
2. Be sure the stack of printer paper is in the sample tray.

ssd_performance

Collects data on read/write throughput on the SSD. This program does not modify any files on the Captis device, it is merely a diagnostic tool.

color_data

Before running this program, be sure that the technical area crescents are installed in the sample tray.

This program reads the color offsets from the QR codes on the technical areas and identifies the locations of the color regions.

camera_validation

Before running this program, be sure that the technical area crescents are installed in the sample tray.

The camera_validation program guarantees that the camera is calibrated and calculates offset values for the OIS. Calculating offset values takes about 10 minutes and provides a visual while calculation occurs.

If the calibration appears to be hung up, stop the calibration by pressing the **Stop** button near the top of the web page, swap the technical area crescents, then attempt to run the container again.

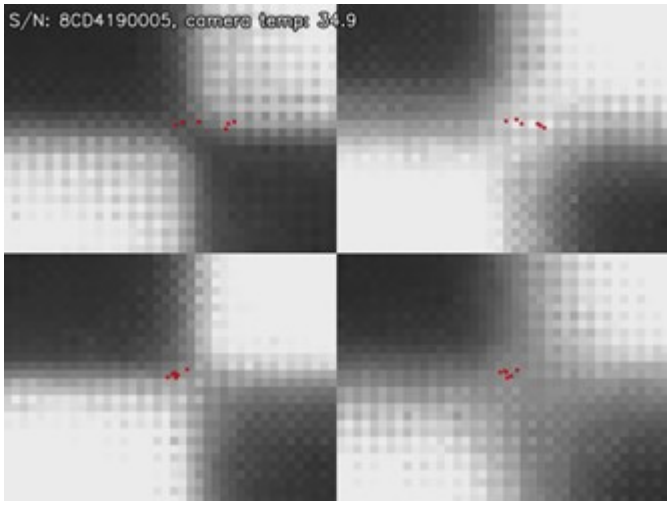

burn_in_studio

Before running this program, place a 6 × 6 inch or larger fabric sample in the center of the sample tray.

This program stresses all of the hardware on the scanner as if it was running software repeatedly for hours. It does not modify any files on the Captis device; it is merely a diagnostic tool.

When to calibrate a Captis device

Use this information to determine when to calibration the scanner.

You only need to calibrate a Captis device in the following scenarios:

- The Captis device was significantly disassembled or reassembled.
- The technical area crescents were replaced.
- The polarizer assembly was replaced.
- A light panel was replaced.
- A cone is being used with a base with a different serial number.

If anything significantly changes the placement of the camera with respect to the calibration areas on the base, or if anything significantly changes the lighting inside the Captis, you should recalibrate it.

6 Supplemental maintenance tool specifications

Use the following illustrations to determine the specifications for tools used to maintain the scanner.

White reflection plate specifications

Use the following illustration to determine the specifications for the white reflection plate.

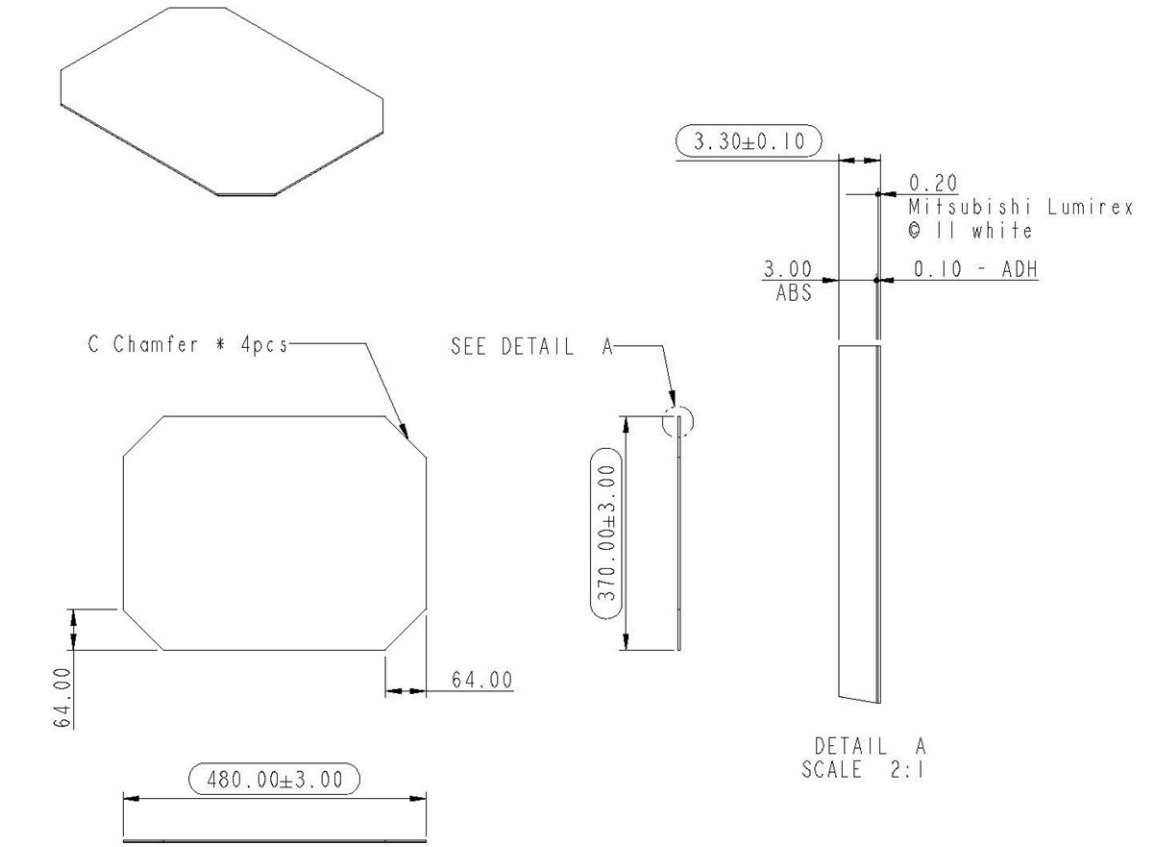

	RANGE	TOLERANCE
(Max) D=3L/1000	0-10	±0.10
	10-50	±0.15
	50-100	±0.20
	100-	±0.25

NOTE
1.MATERIAL: Mitsubishi Lumirex© II white
2.ADHESIVE TYPE: DS-10
3.Color: White & NA
4.APPEARANCE OF PARTSHALL BE FREE FOR:DIRT,GREASE
(if has other spec request, ought to follow the spec to inspect)
5.CRITICAL DIMENSION WITH TOLERANCE SHOULD BE INSPECTED
(MARK "O" FOR INSPECTION)
6.Q'TY: 1

Mirror glass specifications

Use the following illustration to determine the specifications for the mirror glass.

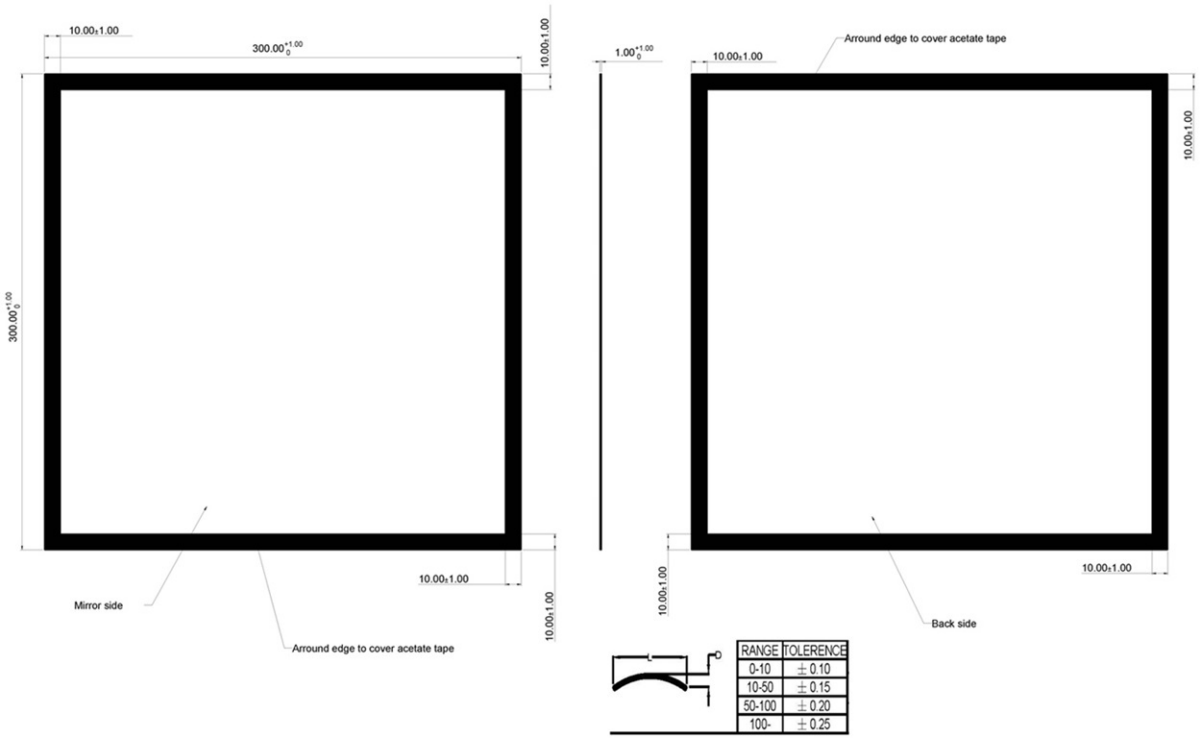

Weave fabrication cloth specifications

Use the following illustrations to determine the specifications for the weave fabrication cloth.

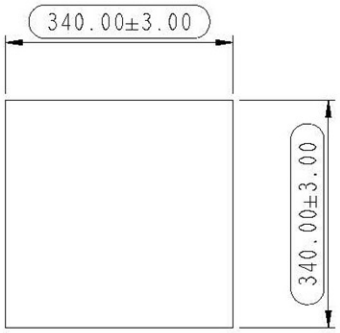

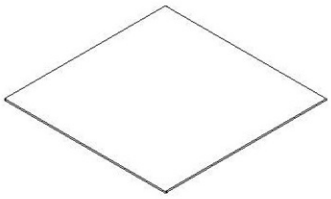

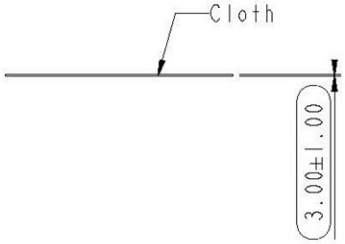

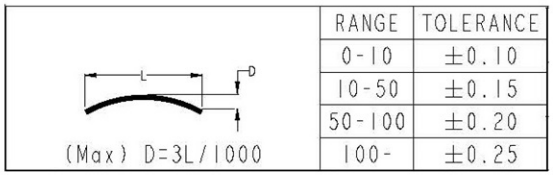

RANGE	TOLERANCE
0-10	±0.10
10-50	±0.15
50-100	±0.20
100-	±0.25

NOTE
1.MATERIAL: Cloth
2.ADHESIVE TYPE: NA
3.Color: NA
4.APPEARANCE OF PARTSHALL BE FREE FOR:DIRT,GREASE
(if has other spec request, ought to follow the spec to inspect)
5.CRITICAL DIMENSION WITH TOLERANCE SHOULD BE INSPECTED
(MARK "O" FOR INSPECTION)
6.Q'TY: 1

Upside down repair table specifications

Use the following illustrations to determine the specifications for the upside down repair table.

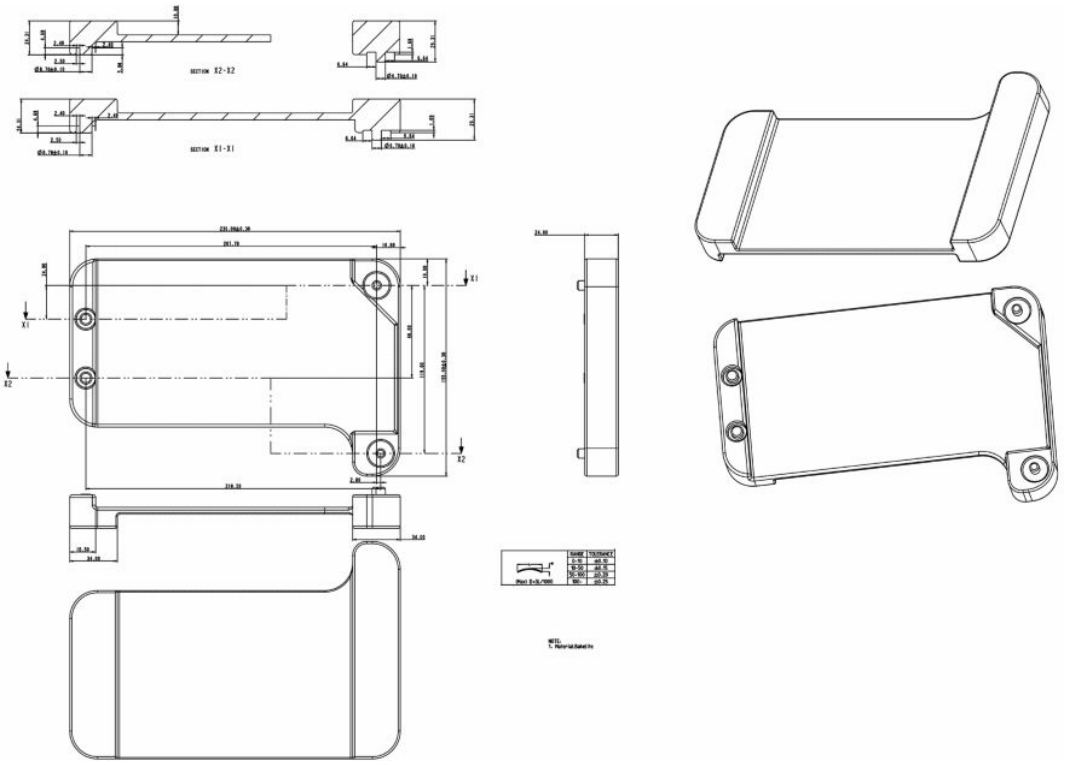

7 Power cord set requirements

The power supplies on some computers have external power switches.

The power cord set received with the computer meets the requirements for use in the country where you purchased the equipment.

Power cord sets for use in other countries must meet the requirements of the country where you use the computer.

General requirements

These requirements are applicable to all countries.

1. The power cord must be approved by an acceptable accredited agency responsible for evaluation in the country where the power cord set will be installed.
2. The power cord set must have a current capacity of 15A minimum for North America, 13A minimum for Taiwan, 12A minimum for Japan, and 10A minimum for all other countries and a nominal voltage rating of 125 V AC or 250 V AC, as required by each country's power system.
3. The diameter of the wire must be a minimum of 14 AWG for North America, a minimum of 1.25 mm^2 for Taiwan and Japan, and a minimum of 1.0 mm^2 for all other countries, and the length of the cord must be greater than 1.8 m (6.0 ft) and less than 3.0 m (9.8 ft).

The power cord should be routed so that it is not likely to be walked on or pinched by items placed upon it or against it. Particular attention should be paid to the plug, electrical outlet, and the point where the cord exits from the product.

⚠ **WARNING!** Do not operate this product with a damaged power cord set. If the power cord set is damaged in any manner, replace it immediately.

Japanese power cord requirements

For use in Japan, use only the power cord received with this product.

IMPORTANT: Do not use the power cord received with this product on any other products.

Country-specific requirements

This information provides additional requirements specific to a country.

Table 7-1 **Power cord country-specific requirements**

Country	Accrediting Agency	Country	Accrediting Agency
Australia (1)	EANSW	Italy (1)	IMQ
Austria (1)	OVE	Japan (3)	METI
Belgium (1)	CEBC	Norway (1)	NEMKO
Canada (2)	CSA	Sweden (1)	SEMKO
Denmark (1)	DEMKO	Switzerland (1)	SEV
Finland (1)	SETI	United Kingdom (1)	BSI
France (1)	UTE	United States (2)	UL
Germany (1)	VDE		

1. The flexible cord must be Type HO5VV-F, 3-conductor, 1.0 mm^2 conductor size. Power cord set fittings (appliance coupler and plug) must bear the certification mark of the agency responsible for evaluation in the country where it will be used.
2. The flexible cord must be Type SVT or equivalent, No. 14 AWG, 3 conductor. The plug must be a 2-pole grounding type with a NEMA 5-15P (15 A, 125 V) or NEMA 6-15P (15 A, 250 V) configuration.
3. Appliance coupler, flexible cord, and plug must bear a T mark and registration number in accordance with the Japanese Dentori Law. Flexible cord must be Type VCT or VCTF, 3-conductor, 1.25 mm^2 conductor size. Plug must be a 2-pole grounding type with a Japanese Industrial Standard C8303 (12 A, 125 V) configuration.

8 Specifications

This section provides specifications for your computer.

Table 8-1 Specifications

	Metric	U.S.
Dimensions (cone)		
Height	35.6 cm	14.0 in
Width	64.1 cm	25.25 in
Depth	64.1 cm	25.25 in
Dimensions (base)		
Height	6.6 cm	2.6 in
Width	70.6 cm	27.8 in
Depth	70.6 cm	27.8 in
Dimensions (explorer ring)		
Height	3.2 cm	1.25 in
Width	66.0 cm	26.0 in
Depth	66.0 cm	26.0 in
Weight		
Cone	16.8 kg	37.0 lbs
Base	17.5 kg	38.5 lbs
Explorer ring	1.8 kg	4.0 lbs
Temperature range		
Operating	5°C to 40°C	40°C to 104°F
Nonoperating	-40°F to 60°C	-40°F to 140°F
Maximum altitude (unpressurized)		
Operating	5,000 m	16,404 ft
Nonoperating	15,240 m	50,000 ft
Relative humidity (noncondensing)		
Operating	10% to 90%	10% to 90%
Nonoperating (38.7°C max wet bulb)	5% to 95%	5% to 95%
Power supply	230 W	
Operating voltage range	90 V AC to 269 V AC	

Table 8-1 Specifications (continued)

	Metric	U.S.
Rated voltage frequency range	100 V AC; 12A @ 50-60 Hz, 115-127 V ac; 12A @50-60 Hz, 200-240 V AC; 10A @ 50-60 Hz	
Operating line frequency range	100-240 V AC; 10A @ 47-66 Hz, 118 V AC; 10A @ 393-407 Hz	

NOTE: Operating temperature is derated 1.0°C per 300 m (1000 ft) to 3000 m (10,000 ft) above sea level; no direct sustained sunlight. Maximum rate of change is 10° C/Hr. The upper limit might be limited by the type and number of options installed.

Index

B

base bracket
  illustrated 5
  removal and replacement 36
base plate
  removal and replacement 35
base pogo board
  illustrated 5
  removal and replacement 36
base USB power board
  illustrated 5
  removal and replacement 37
battery
  disposal 6, 11, 12
  illustrated 5
battery light 2
battery replacement 22

C

cable management 6
calibration 39
  how to calibrate 39
  when to calibrate 41
camera assembly
  illustrated 4
  removal and replacement 32
cleaning
  computer 6, 9
  mouse 6, 9
  safety precautions 6, 9
cleaning lamps
  safety precautions 9
cleaning your computer
  disinfecting 10
  removing dirt and debris 10
components
  front 2
computer cleaning 6, 9
computer features 1
computer major components
  illustrated 4
cone
  illustrated 5
cone cover
  removal and replacement 20
cone outer ring cover
  illustrated 5
cone ring cover
  removal and replacement 15
connector, power 3
country power cord set
  requirements 46

D

dual pogo connector board
  removal and replacement 16
dual pogo connector board, cone
  illustrated 5

E

electrostatic discharge (ESD) 6
  preventing damage 6, 7

F

fan
  illustrated 4
  removal and replacement 26

G

grounding methods 6, 7

H

hard drive
  product description 1
  proper handling 6, 11
heat sink
  illustrated 4
  removal and replacement 27

I

illustrated parts catalog 4
inner cone cover
  illustrated 5
inner cover
  removal and replacement 19
installing
  battery 22

K

keyboard
  cleaning 6, 9

L

lamp and heat sink assembly
  removal and replacement 23
lamp with heat sink
  illustrated 5
lights
  AC adapter and battery 2
  battery 2

M

medium daughter board
  illustrated 5
  removal 25
mirror glass specifications
  illustrated 43
  specification
    mirror glass 43
model name 1
mouse
  cleaning 6, 9

O

operating guidelines 6
overheating, prevention 6

P

ports
  product description 1
  USB 2, 3
power button board
  illustrated 4
  removal and replacement 21
power button, identifying 2
power connector
  identifying 3
power cord set requirements
  country specific 46
power requirements, product
  description 1
power supply
  operating voltage range 48
primary storage
  product description 1
product description
  hard drive 1
  ports 1
  power requirements 1

primary storage 1
product name 1
sensors 1
serviceability 1
solid-state drive 1
wireless 1
product name 1

R

removal and replacement
base bracket 36
base plate 35
base pogo board 36
base USB power board 37
camera assembly 32
cone cover 20
cone ring cover 15
dual pogo connector board 16
fan 26
heat sink 27
inner cover 19
lamp and heat sink assembly 23
power button board 21
single pogo connector board 17
small daughter board 25
solid-state drive 13
system board 30
wireless antenna 34
removing
battery 22
medium daughter board 25

S

safety precautions
cleaning 6, 9
cleaning the lamps 9
screws, correct size 6, 11
sensors
product description 1
service considerations 6, 11
serviceability, product description 1
single pogo connector board
removal and replacement 17
single pogo connector board, cone
illustrated 5
small daughter board
illustrated 5
removal and replacement 25
software
servicing computer 6, 11
solid-state drive
illustrated 5
product description 1
removal and replacement 13
specifications
computer 48
specifications, product 3
static electricity 6
system board
illustrated 4
removal and replacement 30

T

temperature control 6
tool specifications
illustrated 42
tools, servicing 6, 11
Torx T15 screwdriver 6, 11

U

upside down repair table
specifications
illustrated 44
specification
upside down repair table 44
USB port, identifying 2
USB Type-port, identifying 3

V

ventilation, proper 6

W

weave fabrication cloth
specifications
illustrated 43
specification
weave fabrication cloth 43
white reflection plate
specifications
illustrated 42
specification
white reflection plate 42
wireless antenna
removal and replacement 34
wireless antennas
illustrated 4
wireless, product description 1
WLAN module
illustrated 5
removal 29
spare part numbers 29