

Hewlett Packard
Enterprise

HPE ProLiant DL345 Gen10 Plus Server User Guide

Part Number: 30-88209EEE-002
Published: August 2021
Edition: 2

HPE ProLiant DL345 Gen10 Plus Server User Guide

Abstract

This document is for the person who installs, administers, and troubleshoots servers and storage systems. Hewlett Packard Enterprise assumes you are qualified in the servicing of computer equipment and trained in recognizing hazards in products with hazardous energy levels, and are familiar with the weight and stability precautions for rack installations.

Part Number: 30-88209EEE-002
Published: August 2021
Edition: 2

© Copyright 2021 Hewlett Packard Enterprise Development LP

Notices

The information contained herein is subject to change without notice. The only warranties for Hewlett Packard Enterprise products and services are set forth in the express warranty statements accompanying such products and services. Nothing herein should be construed as constituting an additional warranty. Hewlett Packard Enterprise shall not be liable for technical or editorial errors or omissions contained herein.

Confidential computer software. Valid license from Hewlett Packard Enterprise required for possession, use, or copying. Consistent with FAR 12.211 and 12.212, Commercial Computer Software, Computer Software Documentation, and Technical Data for Commercial Items are licensed to the U.S. Government under vendor's standard commercial license.

Links to third-party websites take you outside the Hewlett Packard Enterprise website. Hewlett Packard Enterprise has no control over and is not responsible for information outside the Hewlett Packard Enterprise website.

Acknowledgments

AMD and AMD EPYC™ and combinations thereof are trademarks of Advanced Micro Devices, Inc.

Linux® is the registered trademark of Linus Torvalds in the U.S. and other country/regions.

Microsoft®, Windows®, and Windows Server® are either registered trademarks or trademarks of Microsoft Corporation in the United States and/or other country/regions.

Red Hat® Enterprise Linux® are registered trademarks of Red Hat, Inc. in the United States and other country/regions.

VMware® ESXi™ and VMware vSphere® are registered trademarks or trademarks of VMware, Inc. in the United States and/or other jurisdictions.

All third-party marks are property of their respective owners.

Table of contents

- Component identification
  - Front panel components
  - Front panel LEDs and buttons
    - UID button functionality
    - Front panel LED power fault codes
  - Rear panel components
  - Rear panel LEDs
  - System board components
    - System maintenance switch descriptions
    - DIMM slot locations
    - DIMM label identification
    - Processor and socket components
  - Drive box numbering
  - Drive bay numbering
    - Drive bay numbering: Storage controller
    - Drive bay numbering: SAS expander
  - HPE Basic Drive LED definitions
  - DSC-25 2-port SFP28 card ports and LEDs
  - HPE NS204i-p NVMe OS Boot Device components
  - HPE NS204i-p NVMe OS Boot Device LED definitions
  - Fan bay numbering
- Operations
  - Removing and replacing the front bezel
  - Power up the server
  - Power down the server
  - Releasing the cable management arm
  - Extending the server from the rack
  - Removing the server from the rack
  - Remove the access panel
  - Install the access panel
  - Removing the fan cage
  - Removing and replacing the air baffle
  - Removing a riser cage
  - Removing a riser slot blank
- Setup
  - Initial system installation
    - HPE Installation Service
    - Setting up the server
  - Operational requirements

        - Space and airflow requirements
        - Temperature requirements
        - Power requirements
        - Electrical grounding requirements
    - Rack warnings and cautions
    - Server warnings and cautions
    - Electrostatic discharge
    - POST screen options
- Hardware options installation
    - Hardware option installation guidelines
    - Rack rail option
    - Cable management arm option
    - Installing the bezel and bezel lock
    - Drive options
        - Drive installation guidelines
        - Installing a hot-plug SAS, SATA or NVMe drive
    - Power supply options
        - Hot-plug power supply calculations
        - Power supply warnings and cautions
        - Installing a hot-plug AC power supply
        - Installing the HPE 800 W Flex Slot -48 VDC hot-plug power supply
        - Installing the HPE 1600 W Flex Slot -48 VDC hot-plug power supply
        - Connecting a DC power cable to a DC power source
    - Installing a front 8 SFF drive cage option
    - Installing the rear 2 SFF drive backplane option
    - Installing the front 4 LFF drive backplane option
    - Fan option
        - Installing high-performance fans
    - Memory options
        - DIMM-processor compatibility
        - DIMM population information
        - HPE SmartMemory speed information
        - Installing a DIMM
    - Storage controller options
        - Installing a storage controller
    - Energy pack options
        - HPE Smart Storage Battery
        - HPE Smart Storage Hybrid Capacitor
        - Installing an energy pack
    - Riser and riser cage options
        - Installing primary risers

        - Installing secondary risers
    - Expansion slots
        - Supported PCIe form factors
        - Installing expansion boards
        - Installing a 12G SAS Expander Card
        - Accelerator options
        - Installing an accelerator or GPU
    - M.2 SSD options
        - Installing the M.2 SATA SSD enablement option
        - Installing the HPE NS204i-p NVMe OS Boot Device option
    - Installing an OCP NIC 3.0 adapter
    - Installing the chassis intrusion detection switch
    - Installing the serial port option
    - HPE Trusted Platform Module 2.0 Gen10 Plus option
        - Overview
        - HPE Trusted Platform Module 2.0 guidelines
        - Installing and enabling the HPE TPM 2.0 Gen10 Plus option
            - Installing the Trusted Platform Module board
                - Preparing the server for installation
                - Installing the TPM board and cover
                - Preparing the server for operation
            - Enabling the Trusted Platform Module
                - Enabling the Trusted Platform Module as TPM 2.0
                - Enabling the Trusted Platform Module as TPM 1.2
            - Retaining the BitLocker recovery key/password
- Cabling
    - Cabling guidelines
    - Storage cabling
        - Drive power cabling
            - 12 LFF drive power cabling
            - 24 SFF drive power cabling
            - 2 SFF drive power cabling
        - Storage controller cabling
            - 8 LFF SATA Box 2 and Box 3 to system board connector (J17) cabling
            - 8 LFF SAS/SATA Box 2 and Box 3 to type-a controller cabling
            - 12 LFF SAS/SATA to P816-a controller cabling
            - 12 LFF SAS/SATA + 2SFF to P816-a controller cabling
            - 8 SFF SATA Box 3 to system board connector (J17) cabling
            - 8 SFF SAS/SATA Box 3 to type-a controller cabling
            - 8 SFF SAS/SATA Box 3 to PCIe controller cabling
            - 8 SFF SAS/SATA Box 2 to type-a controller (E208i-a/E408i-a) cabling

- 8 SFF SAS/SATA Box 2 to type-a controller (P816i-a) cabling
- 8 SFF SAS/SATA Box 1 to type-a controller cabling
- 16 SFF SAS/SATA Box 2 and Box 3 to P816i-a controller cabling
- 24 SFF SAS/SATA to SAS expander cabling
- 8 SFF NVMe x4 Box 2 cabling
- 16 SFF SAS/SATA Box 1 and Box 3 to P816i-a controller cabling
- 16 SFF NVMe x4 Box 1 and Box 2 cabling
- 2 SFF SAS/SATA Box 4 to SAS expander port 9 cabling
- 8 SFF Basic U.3x1 to PCIe x16 or x32 tri-mode controller in primary riser cabling
- 8 SFF Basic U.3x1 to PCIe x16 or x32 Ttri-mode controller in secondary riser cabling
- 8 SFF Basic U.3x1 Box2 and Box3 to type-a tri-mode controller cabling
- 24 SFF NVMe x4 Premium U.2/U.3 cabling
- 8 SFF NVMe x4 Box 3 Premium U.2/U.3 to x32 tri-mode controller in primary riser cabling
- 8 SFF NVMe x4 Box 2 Premium U.2/U.3 to x32 tri-mode controller in primary riser cabling
- 8 SFF NVMe x4 Box 1 Premium U.2/U.3 to x32 tri-mode controller in secondary riser cabling
- 8 SFF NVMe x2 Box 3 Premium U.2/U.3 to x16 or x32 tri-mode controller in primary riser cabling
- 8 SFF NVMe x2 Box 2 Premium U.2/U.3 to x16 or x32 tri-mode controller cabling
- 8 SFF NVMe x2 Box 1 Premium U.2/U.3 to x16 or x32 tri-mode controller in secondary riser cabling
- 2 SFF SAS/SATA Box 4 to system board J1 (port 9A) cabling
- 2 SFF SAS/SATA Box 4 to type-a controller cabling
- 2 SFF NVMe Box 4 to tri-mode controller cabling

  - Energy pack cabling
  - Storage controller backup power cabling

- M.2 SATA SSD cabling
- Accelerator or GPU power cabling
- Fan cabling
- OCP bandwidth upgrade cabling
- Serial port cabling
- Chassis intrusion detection switch cabling
- Front I/O cabling

- Software and configuration utilities

  - Server mode
  - Product QuickSpecs
  - Active Health System Viewer

    - Active Health System

      - Active Health System data collection
      - Active Health System Log

  - HPE iLO 5

    - iLO Federation
    - iLO Service Port
    - iLO RESTful API

        - RESTful Interface Tool
        - iLO Amplifier Pack
    - Integrated Management Log
    - Intelligent Provisioning
    - Management security
    - Scripting Toolkit for Windows and Linux
    - HPE Message Passing Interface
    - HPE Performance Cluster Manager
    - UEFI System Utilities
        - Selecting the boot mode
        - Secure Boot
        - Launching the Embedded UEFI Shell
    - Smart Storage Administrator
    - HPE InfoSight for servers
    - USB support
        - External USB functionality
    - Redundant ROM support
        - Safety and security benefits
    - Keeping the system current
        - Updating firmware or system ROM
            - Service Pack for ProLiant
                - Introduction to Smart Update Manager
                - Integrated Smart Update Tools
            - Updating firmware from the System Utilities
            - Updating the firmware from the UEFI Embedded Shell
            - Online Flash components
        - Drivers
        - Software and firmware
        - Operating system version support
        - HPE Pointnext Portfolio
        - Proactive notifications
- Troubleshooting
    - NMI functionality
    - Troubleshooting resources
- System battery replacement
    - System battery information
    - Replace the system battery
- Safety, warranty, and regulatory information
    - Regulatory information
        - Notices for Eurasian Economic Union
        - Turkey RoHS material content declaration

        - Ukraine RoHS material content declaration
    - Warranty information
- Specifications
    - Environmental specifications
    - Limited ambient temperature limitation for specific drive configurations
    - Mechanical specifications
    - Power supply specifications
        - HPE 500 W Flex Slot Platinum Hot-plug Low Halogen Power Supply
        - HPE 800 W Flex Slot Platinum Hot-plug Low Halogen Power Supply
        - HPE 800 W Flex Slot Titanium Hot-plug Low Halogen Power Supply
        - HPE 800 W Flex Slot Universal Hot-plug Low Halogen Power Supply
        - HPE 800 W Flex Slot -48 VDC Hot-plug Low Halogen Power Supply
        - HPE 1600 W Flex Slot Platinum Hot-plug Low Halogen Power Supply
        - HPE 1600 W Flex Slot -48 VDC Hot-plug Power Supply
- Websites
- Support and other resources
    - Accessing Hewlett Packard Enterprise Support
    - Accessing updates
    - Customer self repair
    - Remote support
    - Documentation feedback

Component identification

This chapter describes the external and internal server features and components.

Subtopics

- Front panel components
- Front panel LEDs and buttons
- Rear panel components
- Rear panel LEDs
- System board components
- Drive box numbering
- Drive bay numbering
- HPE Basic Drive LED definitions
- DSC-25 2-port SFP28 card ports and LEDs
- HPE NS204i-p NVMe OS Boot Device components
- HPE NS204i-p NVMe OS Boot Device LED definitions
- Fan bay numbering

Front panel components

SFF front panel components

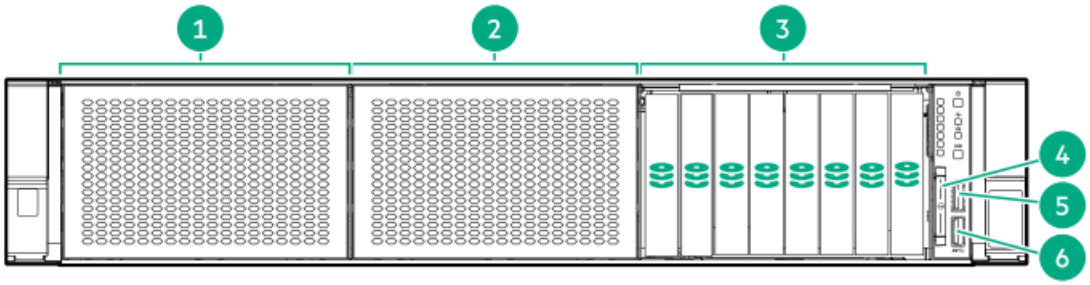

Item	Description
1	Box 1
2	Box 2
3	Box 3
4	Serial number/iLO information pull tab [1]
5	iLO Service port
6	USB 3.0 port

[1] The serial number/iLO information pull tab is double-sided. One side shows the server serial number and the customer asset tag label. The other side shows the default iLO account information.

LFF front panel components



Item	Description
1	Box 1
2	Box 2
3	Box 3

Front panel LEDs and buttons

SFF front panel LEDs and buttons

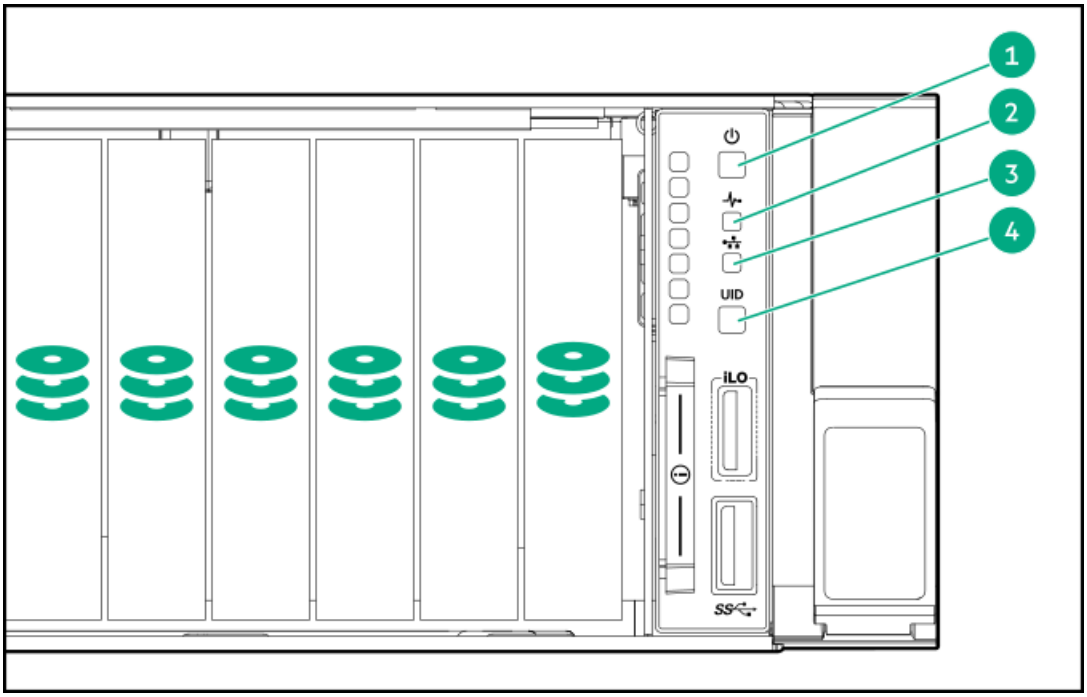

LFF front panel LEDs and buttons

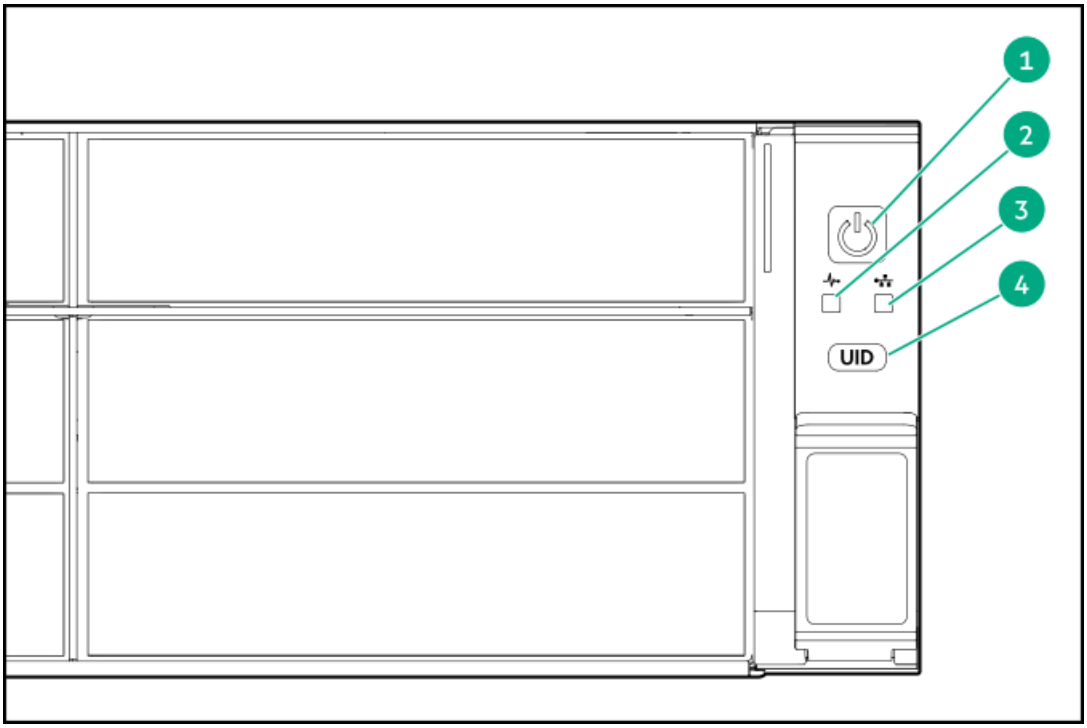

Item	Description	Status	Definition
1	Power On/Standby button and system power LED [1]	Solid green	System on
		Flashing green	Performing power-on sequence
		Solid amber	System in standby
		Off	No power present [2]
2	Health LED [1]	Solid green	Normal
		Flashing green	iLO is rebooting
		Flashing amber	System degraded [3]
		Flashing red	System critical [3]
3	NIC status LED [1]	Solid green	Linked to network
		Flashing green	Network active
		Off	No network activity
4	UID button/LED [1]	Solid blue	Activated
		Flashing blue	• 1 flash per second = Remote management or firmware upgrade in progress • 4 flashes per second = iLO manual reboot sequence initiated • 8 flashes per second = iLO manual reboot sequence in progress
		Off	Deactivated

[1] When all four LEDs described in this table flash simultaneously, a power fault has occurred. For more information, see Front panel LED

power fault codes.

2 Facility power is not present, power cord is not attached, no power supplies are installed, power supply failure has occurred, or the front I/O cable is disconnected.

3 If the health LED indicates a degraded or critical state, review the system Integrated Management Log (IML) or use HPE iLO to review the system health status.

Subtopics

UID button functionality

Front panel LED power fault codes

UID button functionality

The UID button can be used to display the Server Health Summary when the server will not power on. For more information, see the latest HPE iLO 5 User Guide on the **Hewlett Packard Enterprise website**.

Front panel LED power fault codes

The following table provides a list of power fault codes, and the subsystems that are affected. Not all power faults are used by all servers.

Subsystem	LED behavior
System board	1 flash
Processor	2 flashes
Memory	3 flashes
Riser board PCIe slots	4 flashes
FlexibleLOM	5 flashes
Storage controller	6 flashes
System board PCIe slots	7 flashes
Power backplane	8 flashes
Storage backplane	9 flashes
Power supply	10 flashes
PCIe expansion cards installed in riser board	11 flashes
Chassis	12 flashes
GPU card	13 flashes

Rear panel components

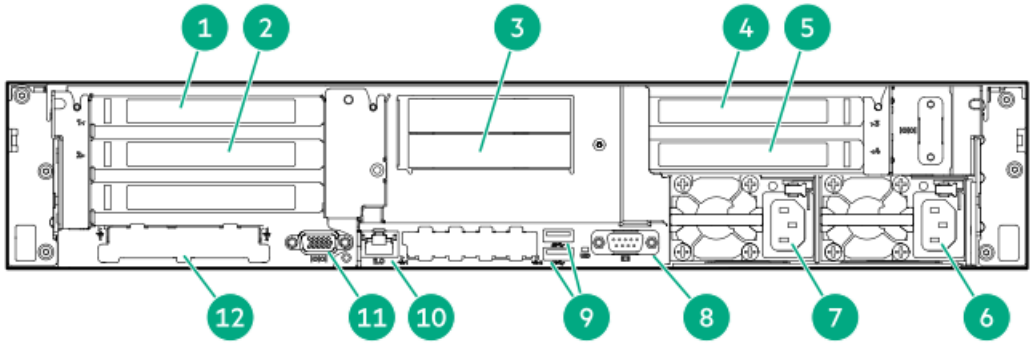

Item	Description
1	Slot 1 PCIe4 x16 (16, 8, 4, 1)
2	Slot 2 PCIe4 x16 (16, 8, 4, 1)
3	Box 4
4	Slot 3 PCIe4 x8 (8, 4, 1) or PCIe4 x16 (16, 8, 4, 1) [1]
5	Slot 4 PCIe4 x8 (8, 4, 1)
6	Flex Slot power supply 1
7	Flex Slot power supply 2 (optional)
8	Serial port (optional)
9	USB 3.0 ports
10	iLO Management port
11	Video port
12	OCP NIC 3.0 slot [2]

1 The slot 3 specifications depends on the secondary riser option installed.
2 This slot supports a SFF OCP NIC 3.0 adapter.

Rear panel LEDs

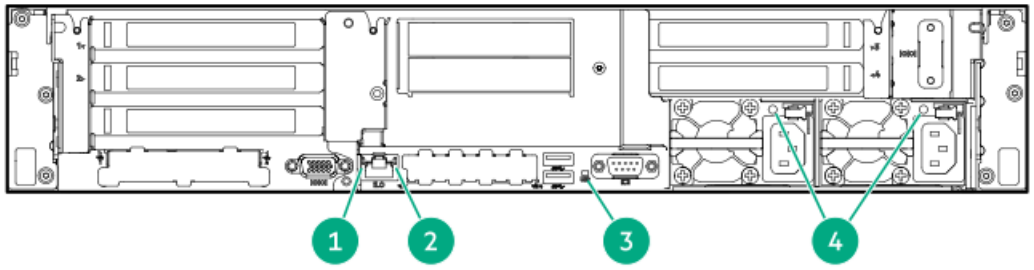

Item	LED	Status	Definition
1	iLO link	Solid green	Network link
		Off	No network link
2	iLO status	Solid green	Linked to network
		Flashing green	Network active
		Off	No network activity
3	UID	Solid blue	Activated
		Flashing blue	• 1 flash per sec = Remote management or firmware upgrade in progress • 4 flashes per sec = iLO manual reboot sequence initiated • 8 flashes per sec = iLO manual reboot sequence in progress
		Off	Deactivated
4	Power supply	Solid green	The power supply is operating normally
		Off	One or more of the following conditions exists: • Power is unavailable • Power supply failure • Power supply is in standby mode • Power supply error

System board components

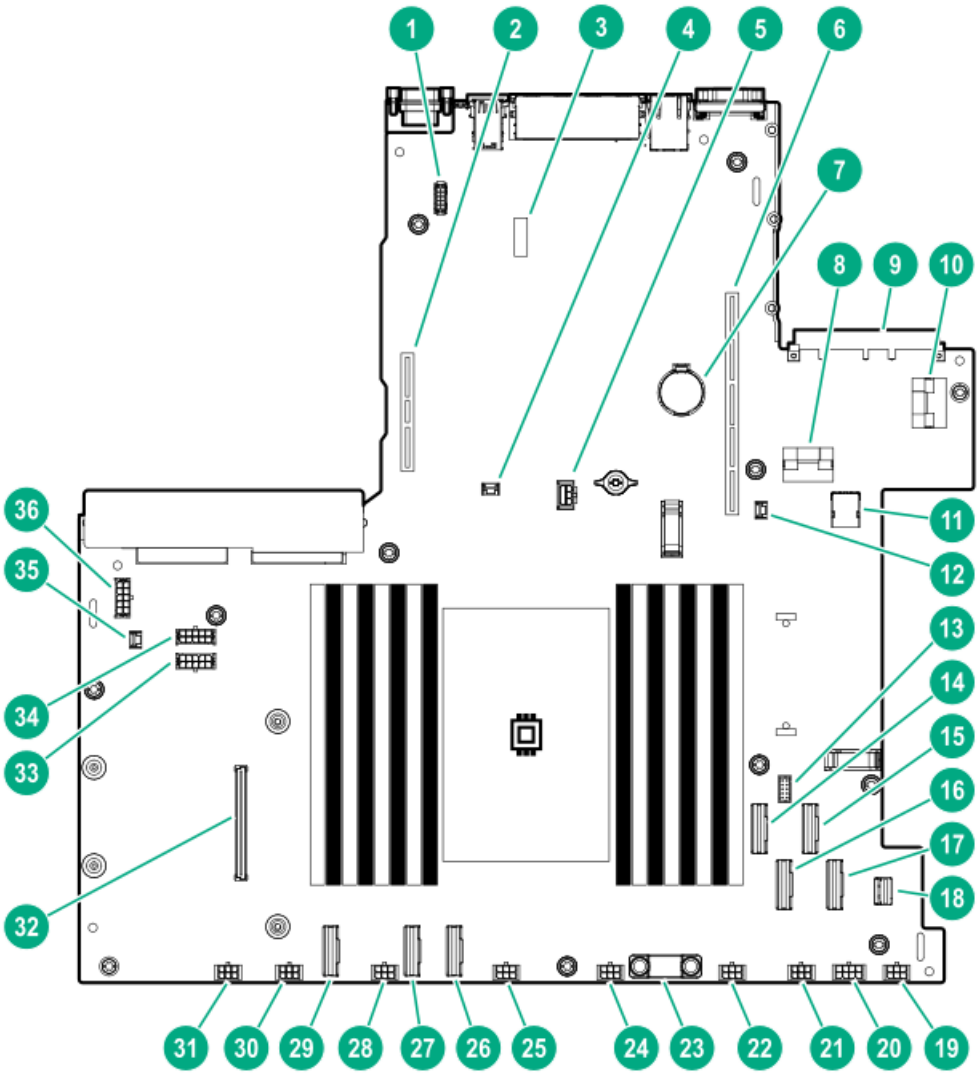
1
2
3
4
5
6
7
8
9
10
11
12
13
14
15
16
17
18
19
20
21
22
23
24
25
26
27
28
29
30
31
32
33
34
35
36

Item	Description
1	Serial port connector
2	Secondary PCIe4 riser connector
3	System maintenance switch
4	Storage controller backup power connector 2
5	Graphics card power connector 2
6	Primary PCIe4 riser connector
7	System battery
8	NVMe port 6A
9	OCP NIC 3.0 slot
10	OCP NIC 3.0 x16 upgrade connector
11	Internal USB 3.0 port
12	Storage controller backup power connector 1
13	Energy pack connector
14	NVMe/SATA port 9A
15	NVMe port 4A
16	NVMe/SATA port 8A
17	NVMe port 5A
18	Front I/O connector
19	Fan connector 6
20	Graphics card power connector 1
21	Fan connector 5
22	Not for use in this server
23	TPM connector
24	Fan connector 4
25	Fan connector 3
26	NVMe port 3A
27	NVMe port 1A
28	Fan connector 2
29	NVMe port 2A
30	Not for use in this server
31	Fan connector 1
32	Type-a modular storage controller slot
33	Drive backplane power connector 3
34	Drive backplane power connector 2
35	Chassis intrusion detection switch connector
36	Drive backplane power connector 1

Subtopics

System maintenance switch descriptions
DIMM slot locations
DIMM label identification
Processor and socket components

System maintenance switch descriptions

Position	Default	Function
S1 [1]	Off	Off = iLO 5 security is enabled. On = iLO 5 security is disabled.
S2	Off	Reserved
S3	Off	Reserved
S4	Off	Reserved
S5 [1]	Off	Off = Power-on password is enabled. On = Power-on password is disabled.
S6 [1], [2], [3]	Off	Off = No function On = Restore default manufacturing settings
S7	Off	Reserved
S8	—	Reserved
S9	—	Reserved
S10	—	Reserved
S11	—	Reserved
S12	—	Reserved

1. To access the redundant ROM, set S1, S5, and S6 to On.
2. When the system maintenance switch position 6 is set to the On position, the system is prepared to restore all configuration settings to their manufacturing defaults.
3. When the system maintenance switch position 6 is set to the On position and Secure Boot is enabled, some configurations cannot be restored. For more information, see Secure Boot.

DIMM slot locations

DIMM slots are numbered sequentially (1 through 16). The supported Advance Memory Protection (AMP) modes use the letter assignments for population guidelines.

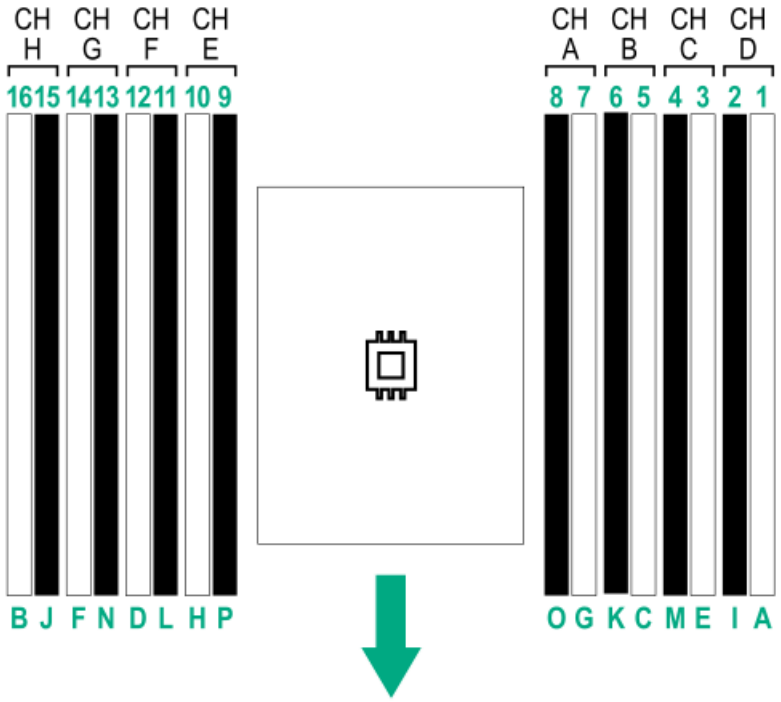

The arrow points to the front of the server.

DIMM label identification

To determine DIMM characteristics, see the label attached to the DIMM. The information in this section helps you to use the label to locate specific information about the DIMM.

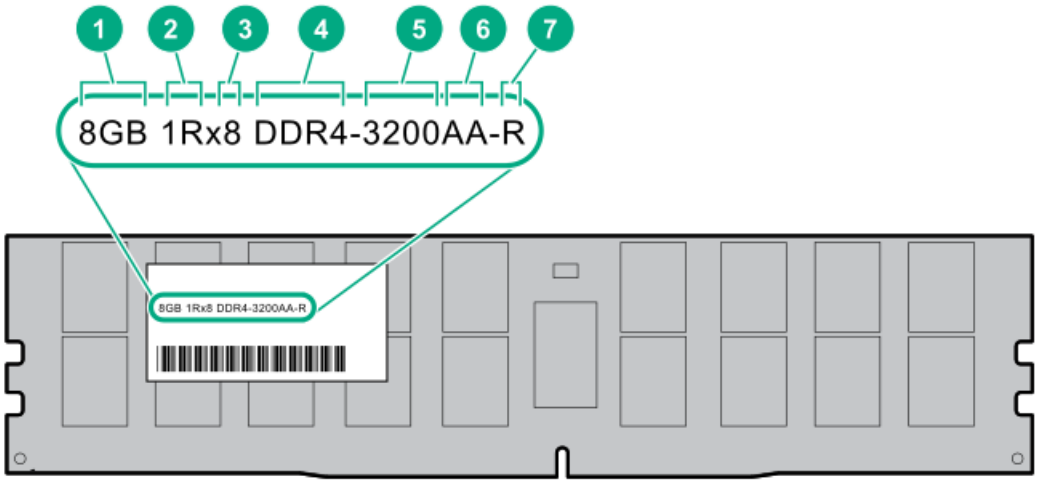

Item	Description	Example
1	Capacity	8 GB
		16 GB
		32 GB
		64 GB
		128 GB
		256 GB
2	Rank	1R = Single rank
		2R = Dual rank
		4R = Quad rank
		8R = Octal rank
3	Data width on DRAM	x4 = 4-bit
		x8 = 8-bit
4	Memory generation	PC4 = DDR4
5	Maximum memory speed	3200 MT/s
6	CAS latency	AA = CAS 22-22-22
		AA = CAS 26-22-22 (for 3DS LRDIMM)
7	DIMM type	R = RDIMM (registered)
		L = LRDIMM (load reduced)

For more information about product features, specifications, options, configurations, and compatibility, see the HPE DDR4 SmartMemory QuickSpecs on the Hewlett Packard Enterprise website (**https://www.hpe.com/support/DDR4SmartMemoryQS**).

Processor and socket components

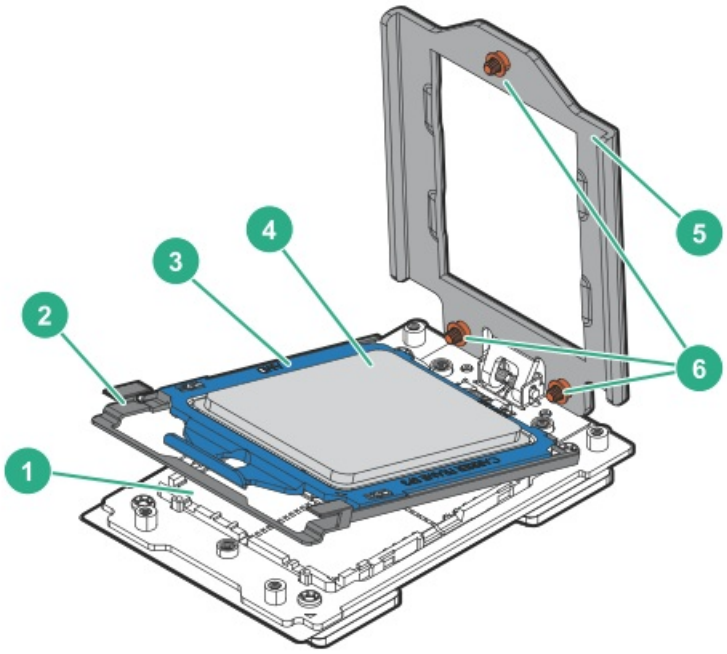

Item	Description
1	Pin field
2	Rail frame
3	Carrier frame
4	Processor
5	Force frame
6	Captive screws (Torx T-20)

Drive box numbering

Front SFF drive box numbering (SAS/SATA/NVMe)

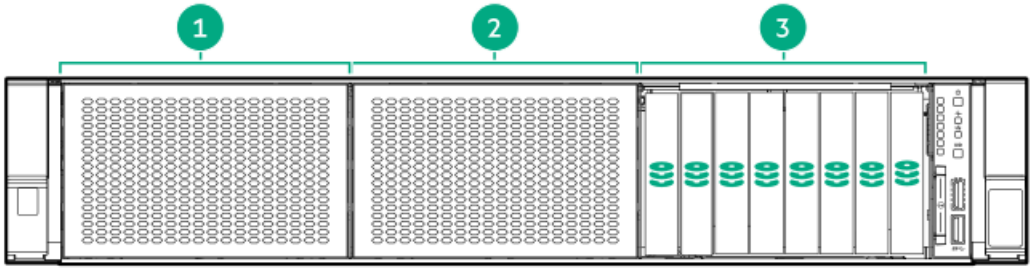

Item	Description
1	Box 1
2	Box 2
3	Box 3

Front LFF drive box numbering (SAS/SATA)



Item	Description
1	Box 1
2	Box 2
3	Box 3

Rear SFF drive box 4 (SAS/SATA/NVMe)

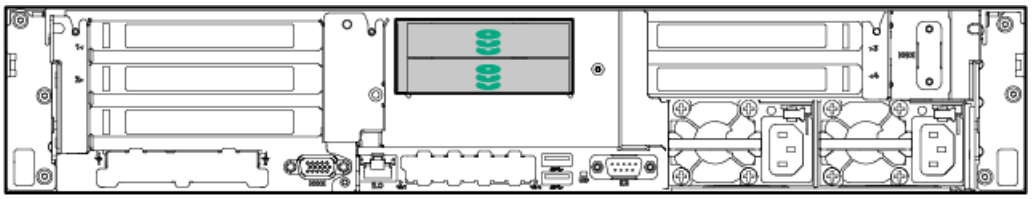

Drive bay numbering

The drive bay numbering depends on where the drive backplanes are connected:

- To a storage controller:
  - Embedded HPE SR100i Gen10 Plus Software RAID controller using the onboard SATA/NVMe ports
  - Type-a and type-p storage controller ports
- To a SAS expander (installed in the primary riser)

Subtopics

Drive bay numbering: Storage controller
Drive bay numbering: SAS expander

Drive bay numbering: Storage controller

When the drive backplane is connected directly to a storage controller, the drive numbering in each drive box starts at 1.

Front SFF drive numbering

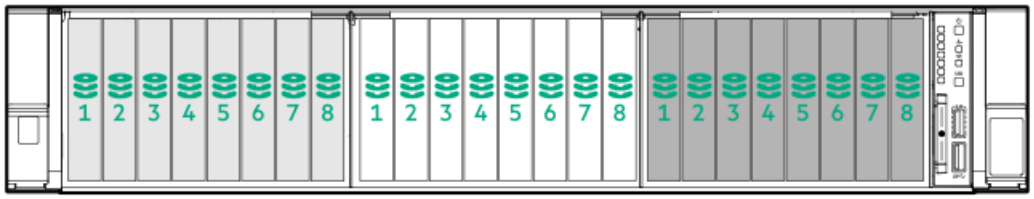

Front LFF drive numbering

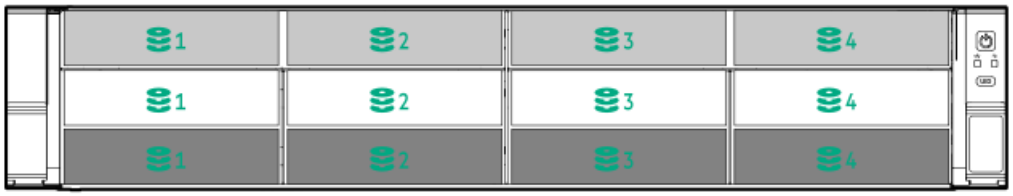

Rear SFF drive numbering

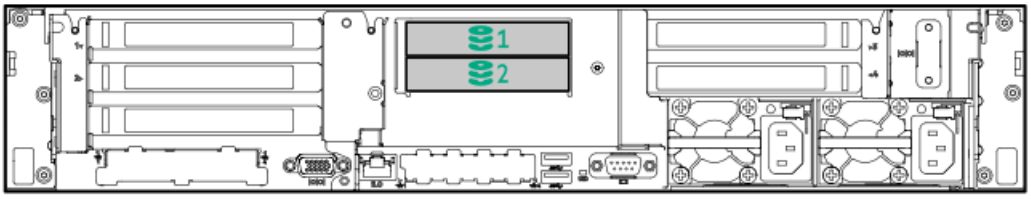

Drive bay numbering: SAS expander

When the drive backplane is connected to the SAS expander, the drive numbering is continuous across all the drive boxes.

- SAS expander port 1 always connects to the controller port 1.
- SAS expander port 2 always connects to the controller port 2.
- SAS expander port 3—Drive numbers 1 to 4
- SAS expander port 4—Drive numbers 5 to 8
- SAS expander port 5—Drive numbers 9 to 12
- SAS expander port 6—Drive numbers 13 to 16
- SAS expander port 7—Drive numbers 17 to 20
- SAS expander port 8—Drive numbers 21 to 24
- SAS expander port 9—Drive numbers 25 to 27

Front SFF drive numbering



Rear SFF drive numbering

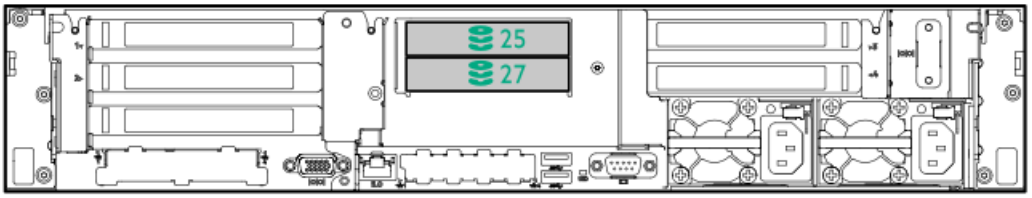

HPE Basic Drive LED definitions

LFF low-profile drive carrier

The LFF low-profile drive carrier supports hot-plug SAS and SATA drives.

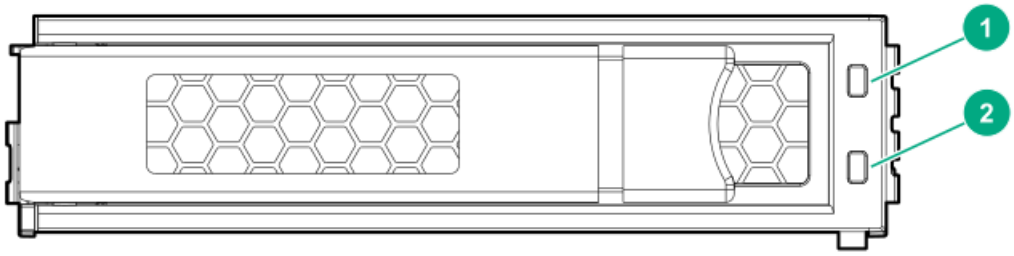

SFF basic drive carrier

The SFF basic drive carrier supports hot-plug SAS, SATA, and NVMe drives.

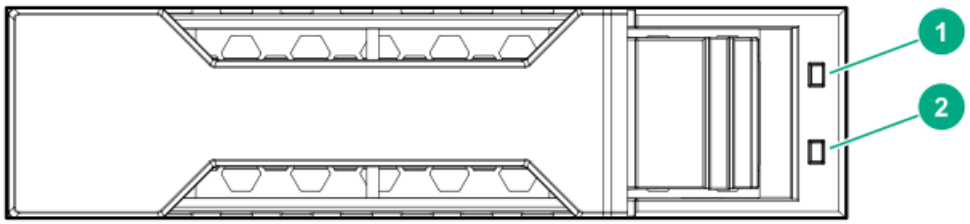

Item	LED	Status	Definition
1	Fault/Locate	Solid amber	This drive has failed, is unsupported, or is invalid.
		Solid blue	The drive is operating normally and being identified by a management application.
		Flashing amber/blue (1 flash per second)	The drive has failed, or a predictive failure alert has been received for this drive. The drive has also been identified by a management application.
		Flashing amber (1 flash per second)	A predictive failure alert has been received for this drive. Replace the drive as soon as possible.
2	Online/Activity	Solid green	The drive is online and has no activity.
		Flashing green (1 flash per second)	The drive is doing one of the following: • Rebuilding or performing a RAID • Performing a stripe size migration • Performing a capacity expansion • Performing a logical drive extension • Erasing • Spare part activation
		Flashing green (4 flashes per second)	The drive is operation normally and has activity.
		Off	The drive is not configured by a RAID controller or is a spare drive.

DSC-25 2-port SFP28 card ports and LEDs

Ports

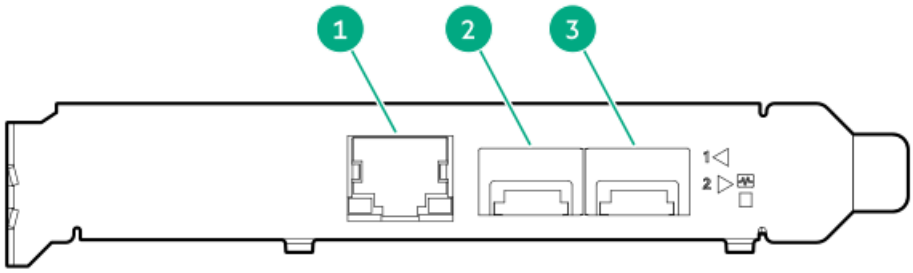

Table 1. Ports

Item	Port	Description
1	Management port	1GbE RJ45
2	Network interface port	10/25G SFP+ based
3	Network interface port	10/25G SFP+ based

LEDs

The HPE for Pensando DSP DSC-25 2p SFP28 card is a dual-port, single-slot, half-height, half-length (HHHL) SFP28 network adapter. It has LEDs for Link (L) and Activity (A) for each port. A half-height bracket is shown in the following illustration with SFP28 ports and LEDs.

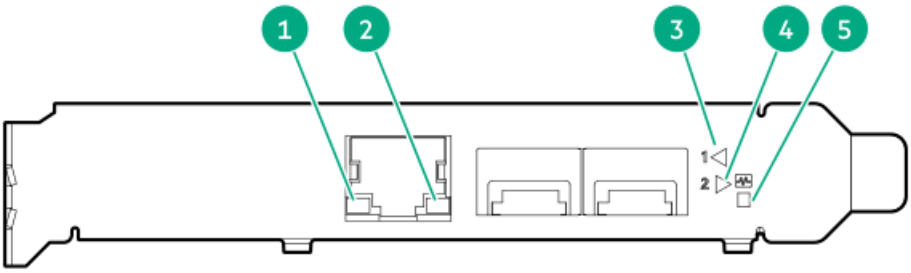

Table 2. LED indicators

Item	LED	Status	Description
1	Management Port Activity LED	Off	No activity
		Flashing	Passing traffic; flashing frequency indicates traffic intensity
2	Management Port Link LED	Off	A link has not been established
		Solid green	Valid Ethernet link
3	SFP Port 1 Link/Activity LED	Off	A link has not been established
		Solid green	Valid Ethernet link
		Flashing green	Passing traffic; flashing frequency indicates traffic intensity
		Solid amber	Link fault
4	SFP Port 2 Link/Activity LED	Off	A link has not been established
		Solid green	Valid Ethernet link
		Flashing green	Passing traffic; flashing frequency indicates traffic intensity
		Solid amber	Link fault
5	System status LED	Off	System is not powered
		Solid amber	Power is up, software has not booted yet
		Solid green	System is up and fully operational

HPE NS204i-p NVMe OS Boot Device components

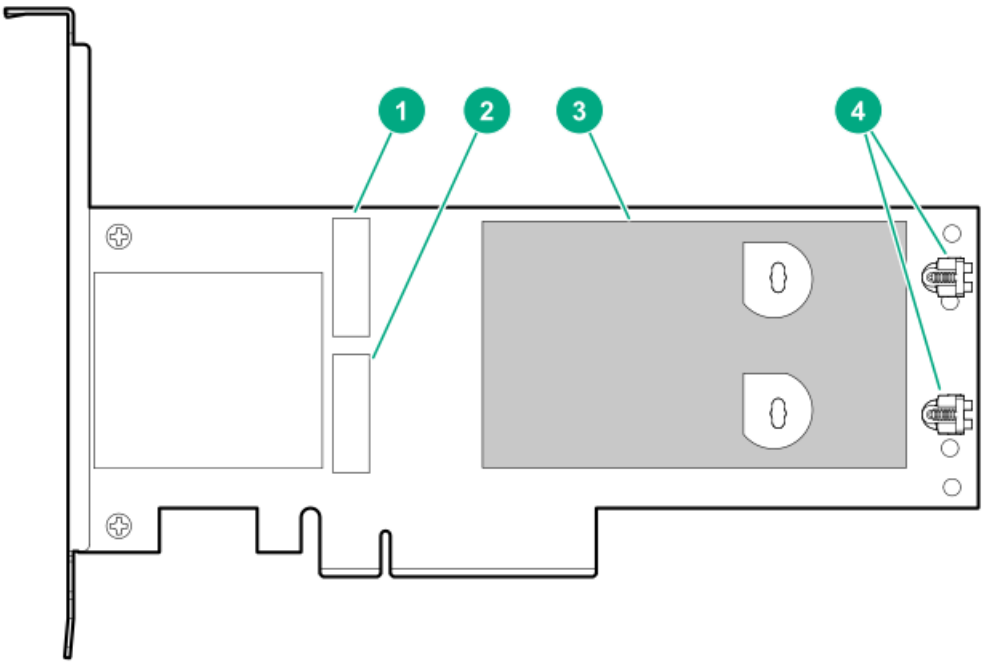

Item	Description
1	Drive bay 1
2	Drive bay 2
3	Thermal interface pad with removable liner
4	M.2 drive retaining latches

HPE NS204i-p NVMe OS Boot Device LED definitions

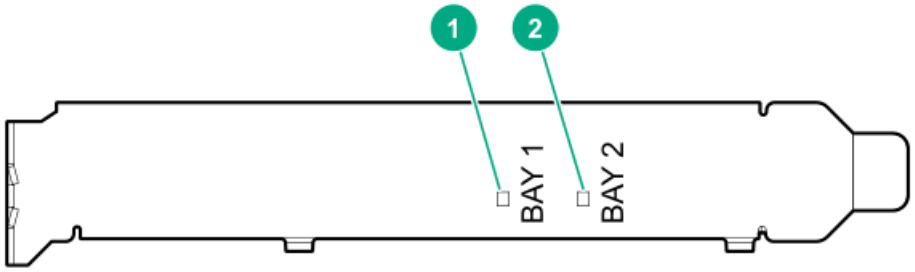

Item	Description	Fault LED status
1	Bay 1 LED	Off: Normal
2	Bay 2 LED	Flashing 1Hz: Drive predictive failure Amber: Drive failure

Fan bay numbering

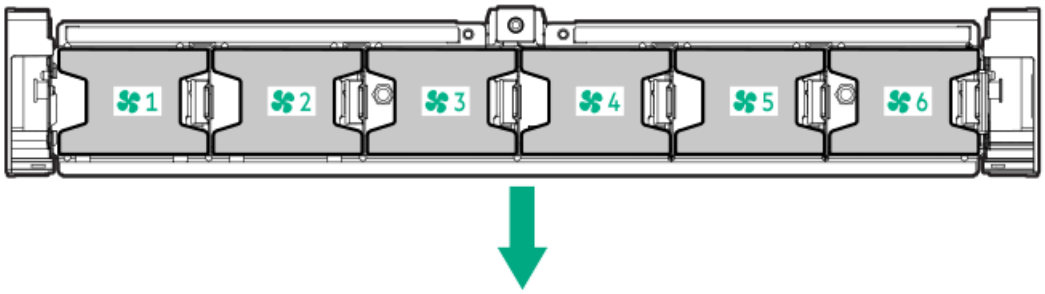

The arrow points to the front of the server.

Operations

This chapter describes the hardware operations carried out prior to and after installing or removing a hardware option, or performing a server maintenance or troubleshooting procedure.

Before performing these hardware operations, review:

- Rack warnings and cautions
- Server warnings and cautions

Subtopics

Removing and replacing the front bezel
Power up the server
Power down the server
Releasing the cable management arm
Extending the server from the rack
Removing the server from the rack
Remove the access panel
Install the access panel
Removing the fan cage
Removing and replacing the air baffle
Removing a riser cage
Removing a riser slot blank

Removing and replacing the front bezel

Procedure

1. If installed, remove the Kensington security lock.

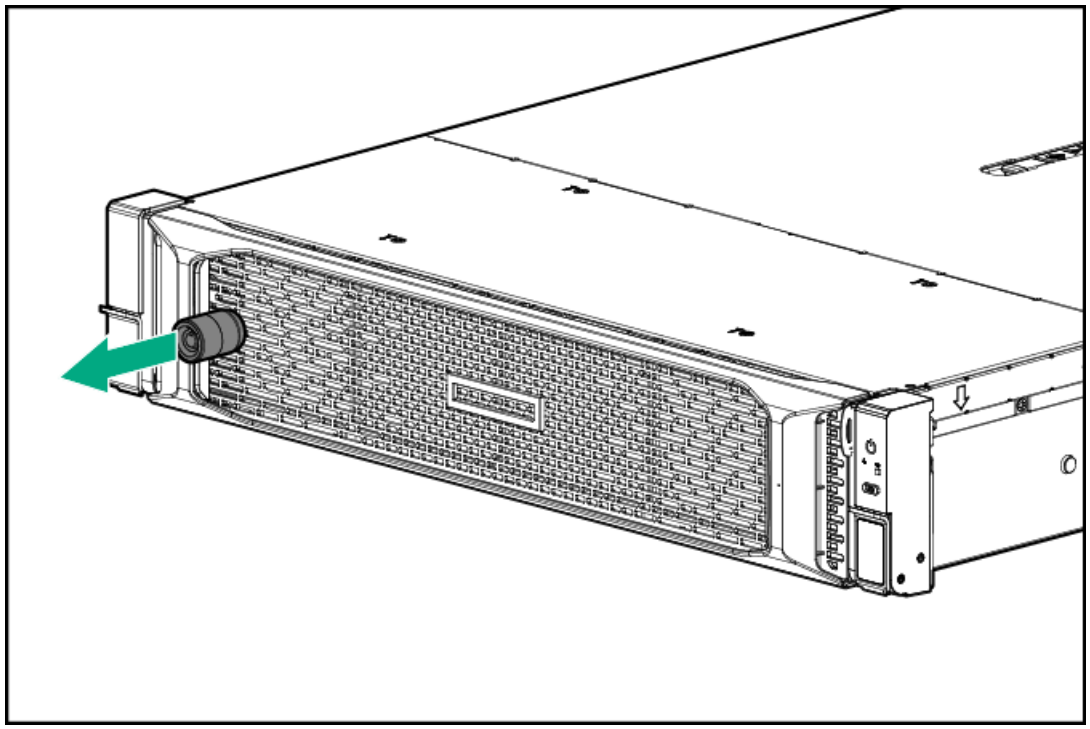

2. Remove the front bezel.

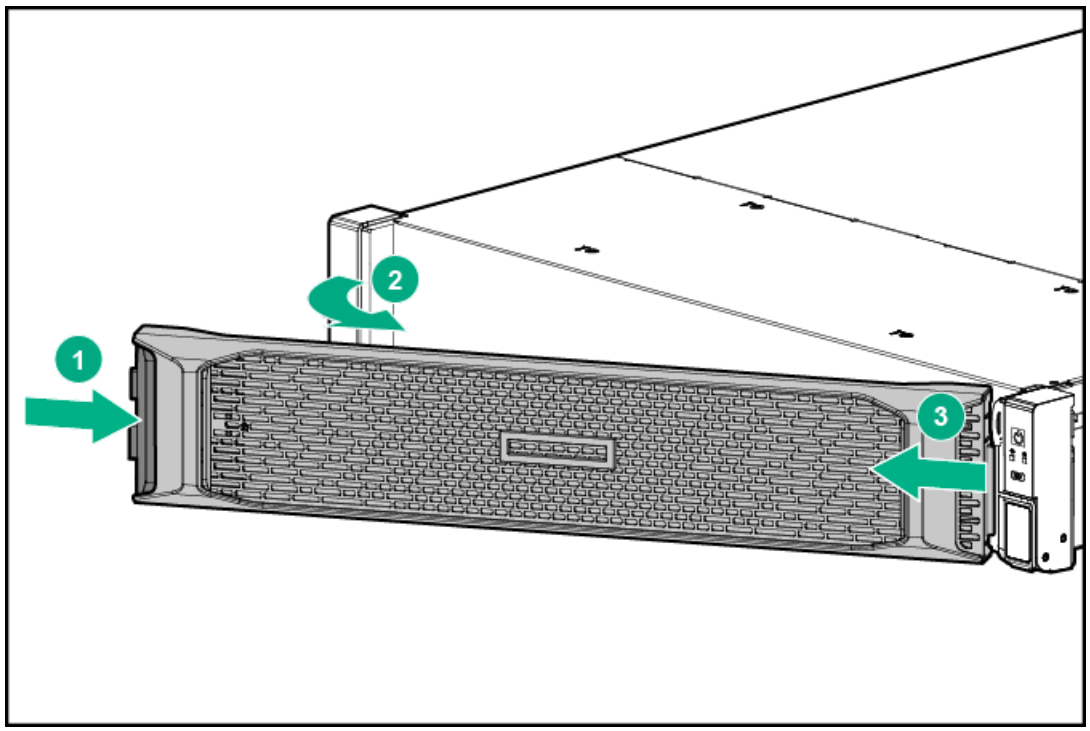

Results

To replace the component, reverse the removal procedure.

Power up the server

About this task

To power up the server, use one of the following methods:

- Press the Power On/Standby button.
- Use the virtual power button through iLO.

Power down the server

Before powering down the server for any upgrade or maintenance procedures, perform a backup of critical server data and programs.

> **IMPORTANT**
> When the server is in standby mode, auxiliary power is still being provided to the system.

To power down the server, use one of the following methods:

- Press and release the Power On/Standby button.
  This method initiates a controlled shutdown of applications and the OS before the server enters standby mode.
- Press and hold the Power On/Standby button for more than 4 seconds to force the server to enter standby mode.
  This method forces the server to enter standby mode without properly exiting applications and the OS. If an application stops responding, you can use this method to force a shutdown.
- Use a virtual power button selection through iLO 5.
  This method initiates a controlled remote shutdown of applications and the OS before the server enters standby mode.

Before proceeding, verify that the server is in standby mode by observing that the system power LED is amber.

Releasing the cable management arm

About this task

Release the cable management arm and then swing the arm away from the rack.

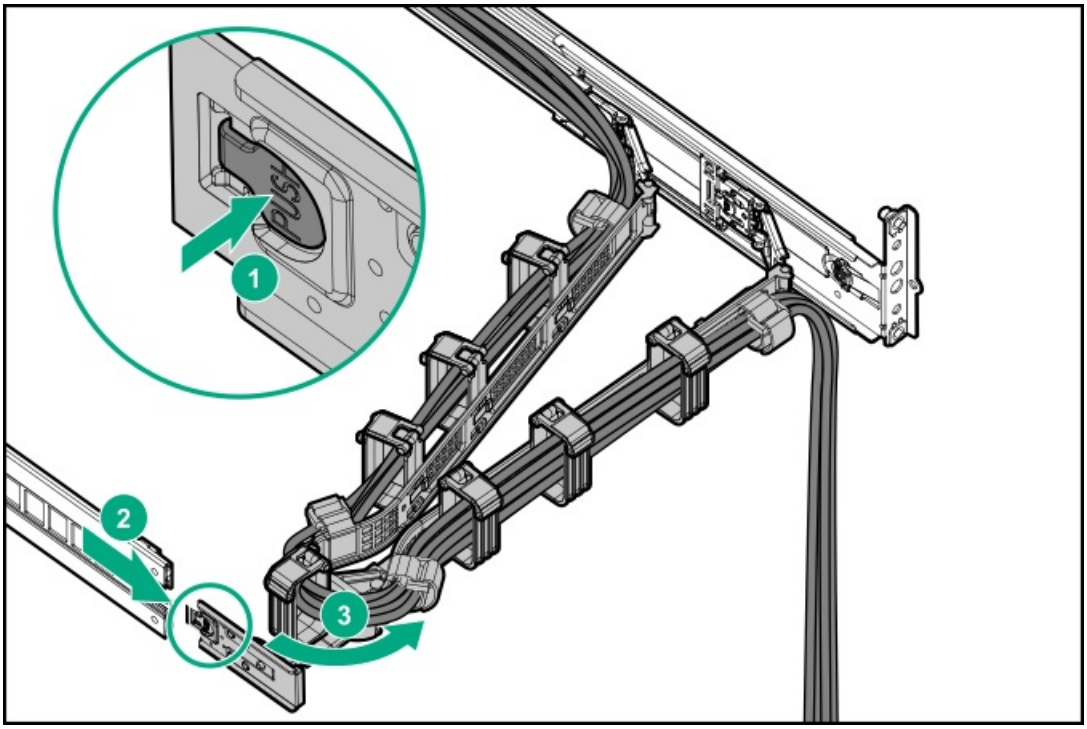

Extending the server from the rack

About this task

WARNING

To reduce the risk of personal injury or equipment damage, be sure that the rack is adequately stabilized before extending anything from the rack.

Procedure

1. Pull down the quick release levers on each side of the server.
2. If necessary, use a T-25 Torx screwdriver to loosen the shipping screws.
3. Extend the server from the rack.

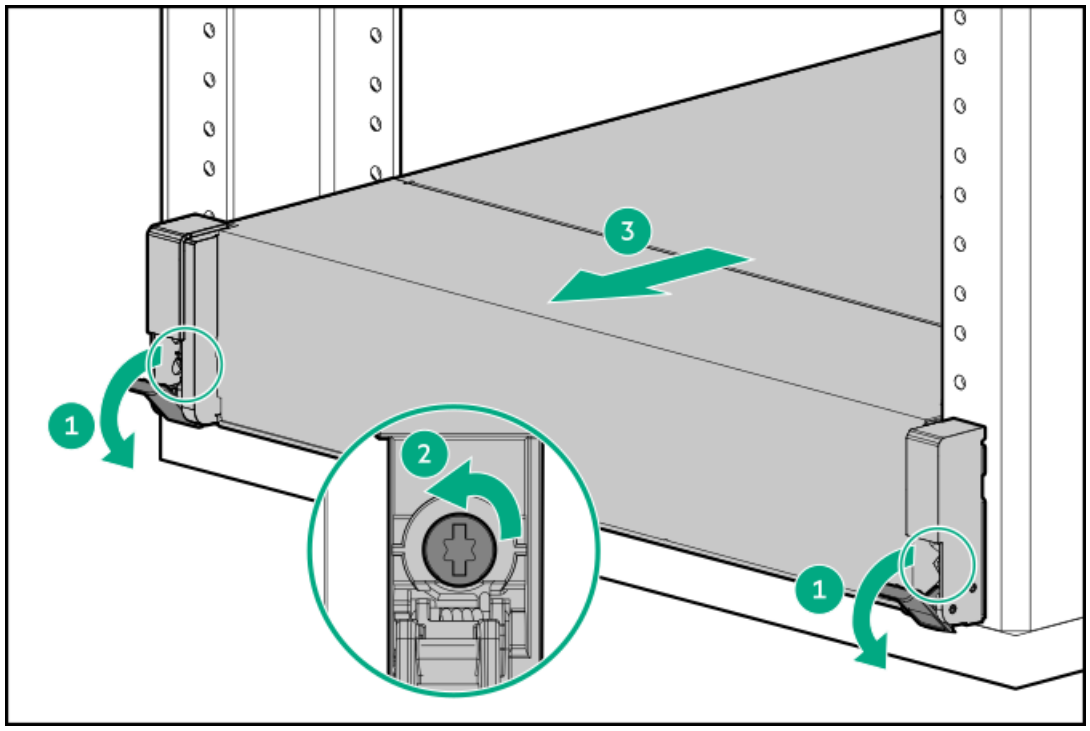

Removing the server from the rack

Prerequisites

Before you perform this procedure, review the:

- Rack warnings and cautions
- Server warnings and cautions
- A fully populated chassis is heavy. Hewlett Packard Enterprise recommends removing the external chassis components before removing the chassis from the rack.

Procedure

1. If installed, remove the front bezel.

2. Power down the server.
3. Remove all power:
   a. Disconnect each power cord from the power source.
   b. Disconnect each power cord from the server.
4. Disconnect all peripheral cables from the server.
5. Extend the server from the rack.
6. Remove the server from the rack.

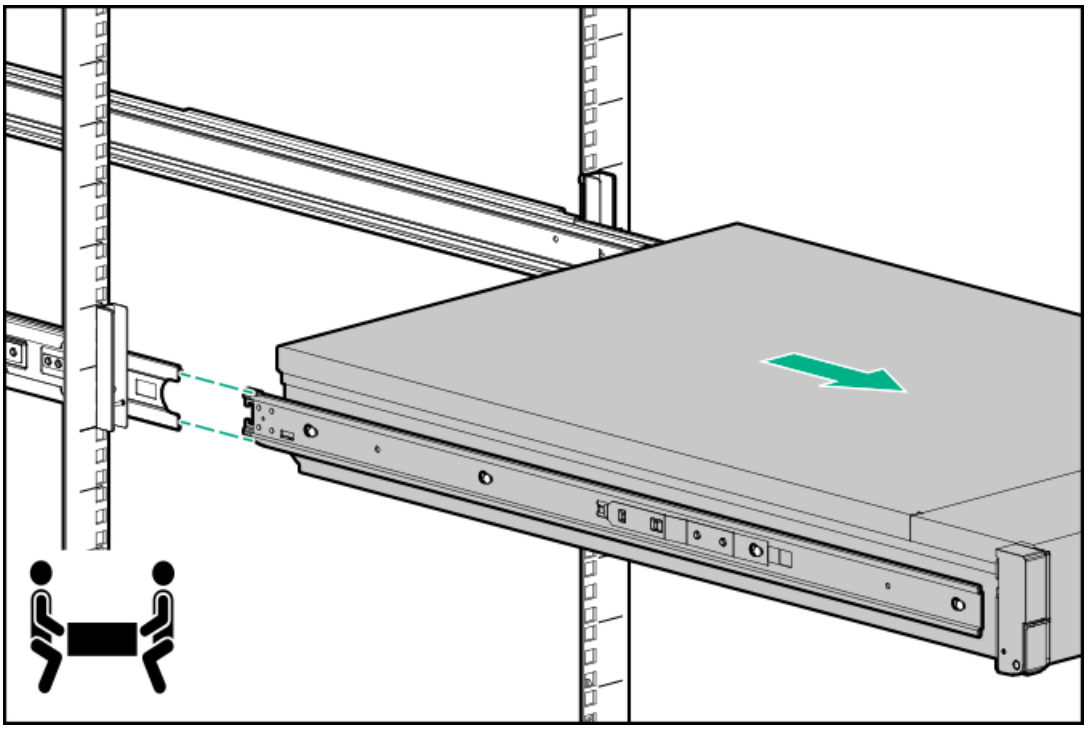

7. Place the server on a sturdy, level surface.

Remove the access panel

About this task

WARNING

To reduce the risk of personal injury from hot surfaces, allow the drives, power supplies, and internal system components to cool before touching them.

CAUTION

Do not operate the chassis for long periods with the access panel open or removed. Operating the chassis in this manner results in improper airflow and improper cooling that can lead to thermal damage.

Procedure

1. Power down the server.
2. If installed, release the cable management arm.

3. Remove all power:
   a. Disconnect each power cord from the power source.
   b. Disconnect each power cord from the server.
4. Extend the server from the rack.
5. Open or unlock the locking latch, slide the access panel to the rear of the chassis, and remove the access panel.

Install the access panel

Procedure

1. Place the access panel on top of the server with the latch open.

   Allow the panel to extend past the rear of the server approximately 1.25 cm (0.5 in).
2. Push down on the latch.

   The access panel slides to a closed position.
3. Tighten the security screw on the latch, if needed.

Removing the fan cage

Procedure

1. Power down the server.
2. If installed, release the cable management arm.
3. Remove all power:
   a. Disconnect each power cord from the power source.
   b. Disconnect each power cord from the server.
4. Do one of the following:
   - Extend the server from the rack.
   - Remove the server from the rack.
5. Remove the access panel.
6. Remove the fan cage.

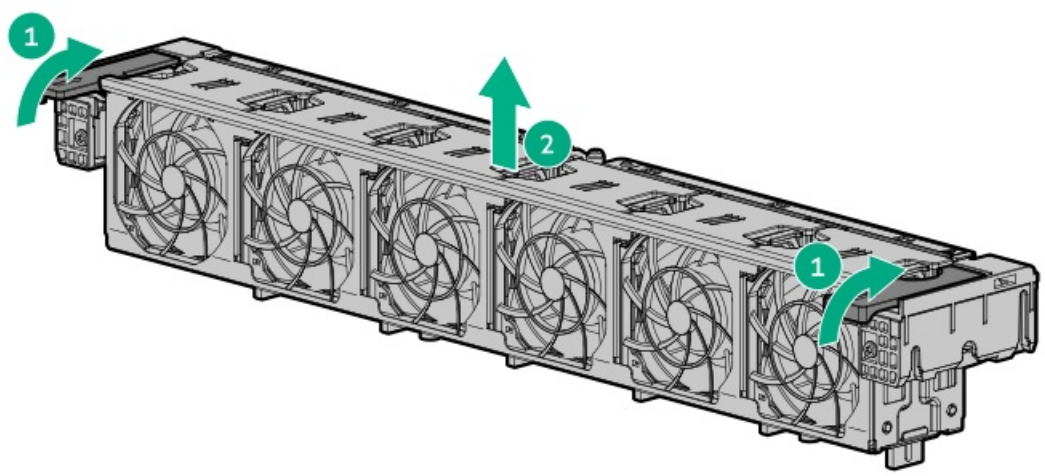

Results

To replace the component, reverse the removal procedure.

Removing and replacing the air baffle

About this task

> **CAUTION**
> For proper cooling, do not operate the server without the access panel, baffles, expansion slot covers, or blanks installed. If the server supports hot-plug components, minimize the amount of time the access panel is open.

Procedure

1. Power down the server.
2. If installed, release the cable management arm.
3. Remove all power:
   a. Disconnect each power cord from the power source.
   b. Disconnect each power cord from the server.
4. Do one of the following:
   - Extend the server from the rack.
   - Remove the server from the rack.
5. Remove the access panel.
6. Remove the air baffle.

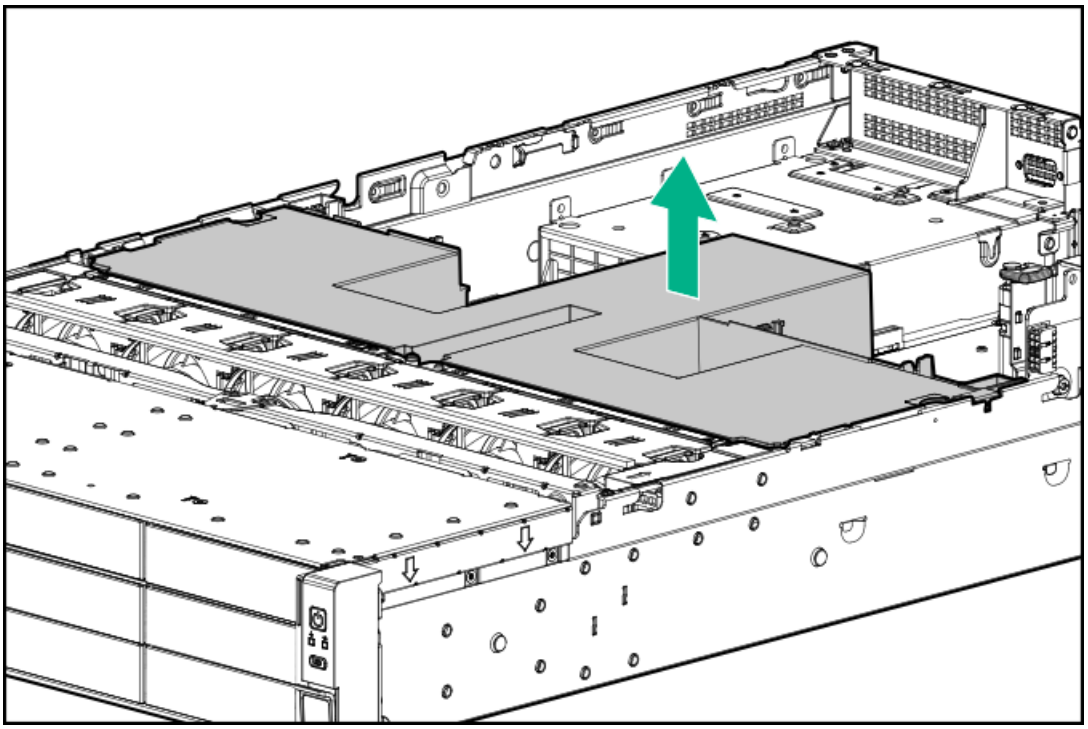

Results

To replace the component, reverse the removal procedure.

Removing a riser cage

Procedure

1. Power down the server.
2. If installed, release the cable management arm .
3. Remove all power:
   a. Disconnect each power cord from the power source.
   b. Disconnect each power cord from the server.
4. Do one of the following:
   - Extend the server from the rack .
   - Remove the server from the rack .
5. Remove the access panel .
6. Do one of the following:
   - If an expansion card with internal cables is installed on the riser, disconnect the cables from the card.
   - If cables are connected to the riser SlimSAS ports, disconnect the cables.
7. When the rear 2 SFF drive option is mounted on the secondary riser cage, disconnect the 2 SFF drive backplane cables.
8. Remove the riser cage:
   - Primary riser cage

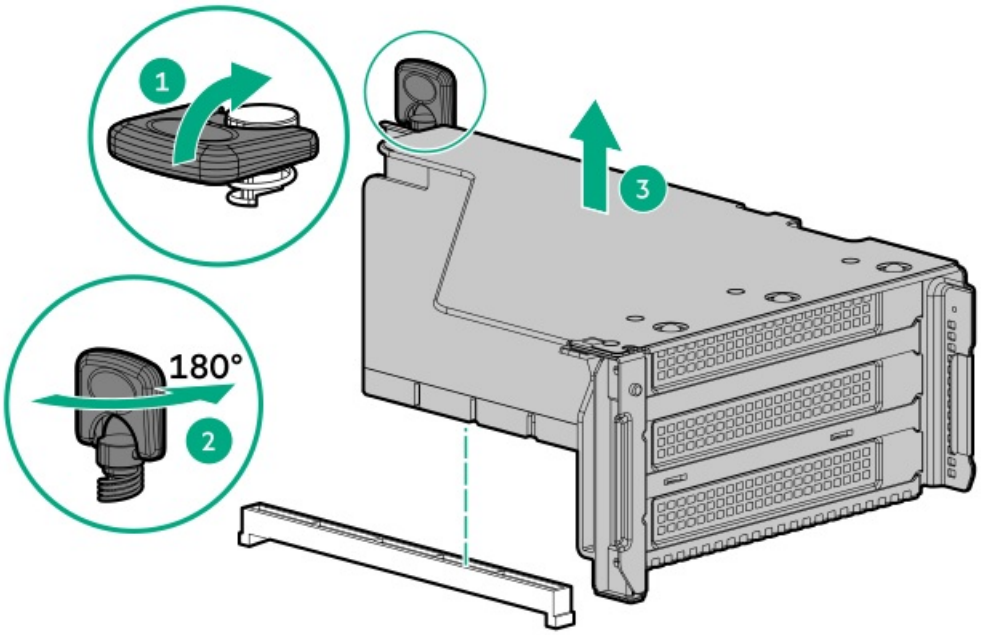

- Secondary riser cage

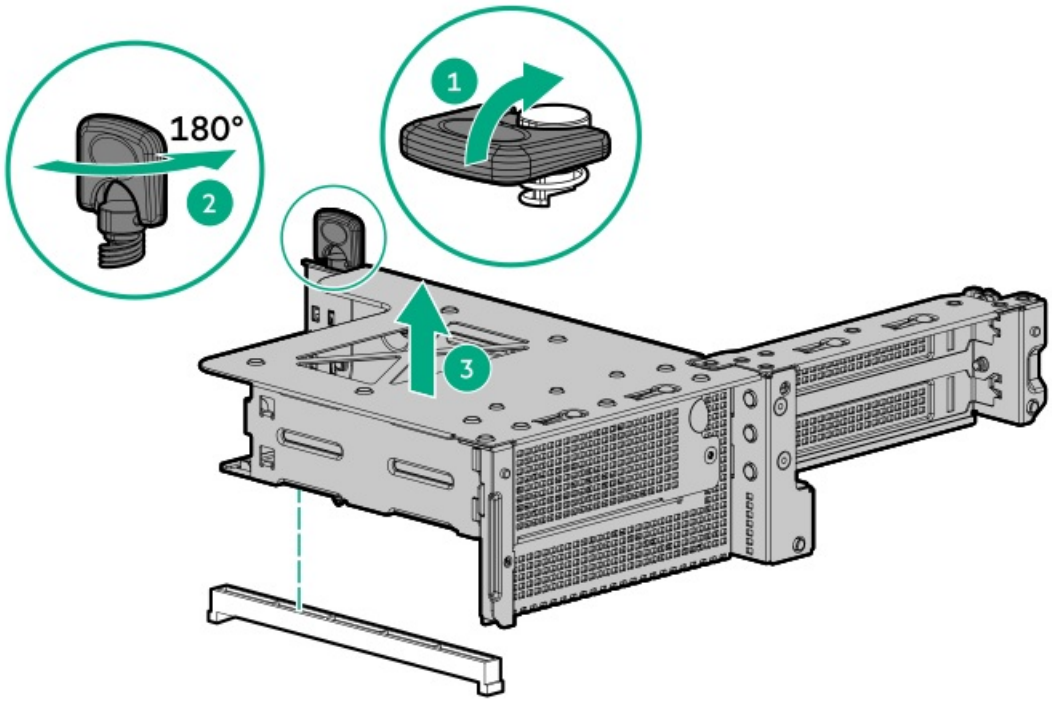

Removing a riser slot blank

Prerequisites

Before you perform this procedure, make sure that you have a T-10 Torx screwdriver available.

About this task

CAUTION

To prevent improper cooling and thermal damage, do not operate the server unless all PCIe slots have either an expansion slot cover or an expansion board installed.

Procedure

1. Power down the server.
2. If installed, release the cable management arm.
3. Remove all power:
   a. Disconnect each power cord from the power source.
   b. Disconnect each power cord from the server.
4. Do one of the following:
   - Extend the server from the rack.
   - Remove the server from the rack.
5. Remove the access panel.
6. Remove the riser cage.
7. Remove the blank from the primary or secondary risers.

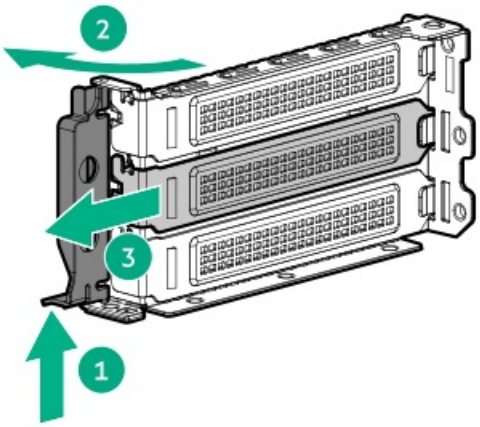

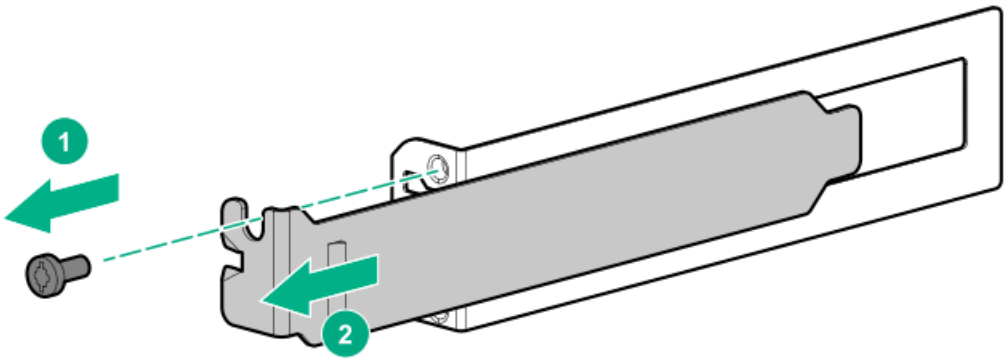

Setup

This chapter describes the initial setup procedure for the server. As well as general operational requirements and safety reminders.

Subtopics

Initial system installation
Operational requirements
Rack warnings and cautions
Server warnings and cautions
Electrostatic discharge
POST screen options

Initial system installation

Depending on your technical expertise and the complexity of the product, for the initial system installation, select one of the following options:

- Ordering the HPE Installation Service
- Setting up the server

Subtopics

HPE Installation Service
Setting up the server

HPE Installation Service

HPE Installation Service provides basic installation of Hewlett Packard Enterprise branded equipment, software products, as well as HPE-supported products from other vendors that are sold by HPE or by HPE authorized resellers. The Installation Service is part of a suite of HPE deployment services that are designed to give users the peace of mind that comes from knowing that their HPE and HPE-supported products have been installed by an HPE specialist.

The HPE Installation Service provides the following benefits:

- Installation by an HPE authorized technical specialist.
- Verification prior to installation that all service prerequisites are met.
- Delivery of the service at a mutually scheduled time convenient to your organization.
- Allows your IT resources to stay focused on their core tasks and priorities.
- Full coverage during the warranty period for products that require installation by an HPE authorized technical specialist.

For more information on the features, limitations, provisions, and ordering information of the HPE Installation Service, see this Hewlett Packard Enterprise website:

https://www.hpe.com/support/installation-service

Setting up the server

Prerequisites

Before setting up the server:

- Download the latest SPP:
  https://www.hpe.com/servers/spp/download

  You might be prompted for your HPE Passport credentials.
- Verify that your OS or virtualization software is supported:
  https://www.hpe.com/info/ossupport
- Review the UEFI Deployment Guide for HPE ProLiant Gen10 Servers and HPE Synergy:
  https://www.hpe.com/support/UEFIGen10-DG-en

  If the UEFI requirements are not met, you might experience boot failures or other errors when installing the operating system.
- If needed, do one of the following to download the storage driver:
  - Download it from the HPE Support Center website:

    https://www.hpe.com/support/hpesc
  - Extract it from the SPP.
- Read the operational requirements for the server:
  Operational requirements
- Read the safety and compliance information on the HPE website:
  https://www.hpe.com/support/safety-compliance-enterpriseproducts

Procedure

Unbox the server

1. Unbox the server and verify the contents:
   - Server
   - Power cord
   - Rack-mounting hardware (optional)
   - Documentation

   The server does not ship with OS media. All system software and firmware is preloaded on the server.

Install the hardware options

2. (Optional) Install hardware options. For installation instructions, see Hardware options installation.

Rack the server and connect the peripherals

3. Install the rack-mounting hardware:
   - Rack rails: **https://www.hpe.com/support/DL385Gen10Plus-rack**
   - Cable management arm: **https://www.hpe.com/support/DL385Gen10Plus-cma**
4. Connect the peripheral devices and power cords to the server.
5. Decide how to manage the server:
   - Locally: Use a KVM switch or a connect a keyboard, monitor, and mouse.
   - Remotely: Connect to the iLO web interface and run a remote console:
     a. Verify the following:
        - iLO is licensed to use the remote console feature.
          If iLO is not licensed, visit the HPE website:

          https://www.hpe.com/info/ilo

- The iLO management port is connected to a secure network.

b. Using a browser, navigate to the iLO web interface, and then log in.

```
https://<iLO hostname or IP address>
```

Note the following:

- The iLO hostname is on the serial number/ iLO information pull tab.
- If a DHCP server assigns the IP address, the IP address appears on the boot screen.
- If a static IP address is assigned, use that IP address.
- The default login credentials are on the serial number/ iLO information pull tab.

c. In the side navigation, click the Remote Console & Media link, and then launch a remote console.

Power on the server

6. Press the Power On/Standby button.

   For remote management, use the iLO virtual power button.

7. Using the SPP, update the following:

   - System ROM
   - Storage controller
   - Network controller
   - Intelligent Provisioning

Set up the storage

8. Set up the storage. Do one of the following:

   - To configure the server to boot from a SAN, see the following guide: **https://www.hpe.com/info/boot-from-san-config-guide**
   - If an HPE storage controller option is installed:
     - For SR controllers, use the Smart Storage Administrator to create arrays:

       a. From the boot screen, press **F10** to run Intelligent Provisioning.

       b. From Intelligent Provisioning, run Smart Storage Administrator.

       For more information on SR controller configuration, see one of the following guides:

       - HPE Smart Array SR Gen10 User Guide at **https://www.hpe.com/support/SSC-SRGen10-ug**
       - HPE SmartRAID SR Gen10 Plus Controller User Guide at **https://www.hpe.com/info/SmartRAID-Gen10Plus-UG**

     - For MR controllers, use the UEFI Storage Configuration Utility to create arrays. Intelligent Provisioning and Smart Storage Administrator does not support MR controller configuration.

       IMPORTANT

       Before you install an OS on drives connected to an MR controller, configure the drives using UEFI System Utilities (F9). If the drives are not configured, the OS will not detect the drives during installation.

       a. From the boot screen, press **F9** to enter UEFI System Utilities.

       b. From the UEFI System Utilities screen, select System Configurations > controller name > Array Configuration > Create Array.

       For more information on MR controller configuration, see the HPE MegaRAID MR Gen10 Plus Controller User Guide at **https://www.hpe.com/info/MegaRAID-Gen10Plus-UG**.

- If no controller option is installed, do one of the following:
  - AHCI is enabled by default. You can deploy an OS or virtualization software.
  - Disable AHCI, enable software RAID, and then create an array.
    For more information, see the HPE SR Gen10 Plus Software RAID User Guide at **https://www.hpe.com/support/SSC-SRGen10Plus-ug**.

Deploy an OS or virtualization software

9. Deploy an OS or virtualization software. Do one of the following:
   - Press F10 at the POST screen.

     For Intelligent Provisioning 3.30 and later, you are prompted to select whether you want to enter the Intelligent Provisioning or HPE Rapid Setup Software mode. After you have selected a mode, you must reprovision the server to change the mode that launches when you boot to F10.
   - Manually deploy an OS:
     a. Insert the installation media.

        For remote management, click Virtual Drives in the iLO remote console to mount images, drivers, or files to a virtual folder. If a storage driver is required to install the OS, use the virtual folder to store the driver.
     b. Press F11 at boot screen to select the boot device.
     c. After the OS installed, update the drivers.

Register the server

10. To experience quicker service and more efficient support, register the server at the HPE website:

    https://myenterpriselicense.hpe.com

Operational requirements

Subtopics

Space and airflow requirements
Temperature requirements
Power requirements
Electrical grounding requirements

Space and airflow requirements

To allow for servicing and adequate airflow, observe the following space and airflow requirements when deciding where to install a rack:

- Leave a minimum clearance of 63.5 cm (25 in) in front of the rack.
- Leave a minimum clearance of 76.2 cm (30 in) behind the rack.
- Leave a minimum clearance of 121.9 cm (48 in) from the back of the rack to the back of another rack or row of racks.

Hewlett Packard Enterprise servers draw in cool air through the front door and expel warm air through the rear door. Therefore, the front and rear rack doors must be adequately ventilated to allow ambient room air to enter the cabinet, and the rear door must be adequately ventilated to allow the warm air to escape from the cabinet.

CAUTION
To prevent improper cooling and damage to the equipment, do not block the ventilation openings.

When vertical space in the rack is not filled by a server or rack component, the gaps between the components cause changes in airflow through the rack and across the servers. Cover all gaps with blanking panels to maintain proper airflow.

CAUTION

Always use blanking panels to fill empty vertical spaces in the rack. This arrangement ensures proper airflow. Using a rack without blanking panels results in improper cooling that can lead to thermal damage.

The 9000 and 10000 Series Racks provide proper server cooling from flow-through perforations in the front and rear doors that provide 64 percent open area for ventilation.

CAUTION

If a third-party rack is used, observe the following additional requirements to ensure adequate airflow and to prevent damage to the equipment:

- Front and rear doors—If the 42U rack includes closing front and rear doors, you must allow 5,350 sq cm (830 sq in) of holes evenly distributed from top to bottom to permit adequate airflow (equivalent to the required 64 percent open area for ventilation).
- Side—The clearance between the installed rack component and the side panels of the rack must be a minimum of 7 cm (2.75 in).

Temperature requirements

To ensure continued safe and reliable equipment operation, install or position the system in a well-ventilated, climate-controlled environment.

The maximum recommended ambient operating temperature (TMRA) for most server products is 35°C (95°F). The temperature in the room where the rack is located must not exceed 35°C (95°F).

CAUTION

To reduce the risk of damage to the equipment when installing third-party options:

- Do not permit optional equipment to impede airflow around the server or to increase the internal rack temperature beyond the maximum allowable limits.
- Do not exceed the manufacturer's TMRA.

Power requirements

Installation of this equipment must comply with local and regional electrical regulations governing the installation of information technology equipment by licensed electricians. This equipment is designed to operate in installations covered by NFPA 70, 1999 Edition (National Electric Code) and NFPA-75, 1992 (code for Protection of Electronic Computer/Data Processing Equipment). For electrical power ratings on options, refer to the product rating label or the user documentation supplied with that option.

WARNING

To reduce the risk of personal injury, fire, or damage to the equipment, do not overload the AC supply branch circuit that provides power to the rack. Consult the electrical authority having jurisdiction over wiring and installation requirements of your facility.

CAUTION

Protect the server from power fluctuations and temporary interruptions with a regulating uninterruptible power supply. This device protects the hardware from damage caused by power surges and voltage spikes and keeps the system in operation during a power failure.

Electrical grounding requirements

The server must be grounded properly for proper operation and safety. In the United States, you must install the equipment in accordance with NFPA 70, National Electric Code Article 250, as well as any local and regional building codes. In Canada, you must install the equipment in accordance with Canadian Standards Association, CSA C22.1, Canadian Electrical Code. In all other countries, you must install the equipment in accordance with any regional or national electrical wiring codes, such as the International Electrotechnical Commission (IEC) Code 364, parts 1 through 7. Furthermore, you must be sure that all power distribution devices used in the installation, such as branch wiring and receptacles, are listed or certified grounding-type devices.

Because of the high ground-leakage currents associated with multiple servers connected to the same power source, Hewlett Packard Enterprise recommends the use of a PDU that is either permanently wired to the building's branch circuit or includes a nondetachable cord that is wired to an industrial-style plug. NEMA locking-style plugs or those complying with IEC 60309 are considered suitable for this purpose. Using common power outlet strips for the server is not recommended.

Rack warnings and cautions

WARNING

When all components are removed, the server weighs 12.57 kg (27.71 lb). When all components are installed, the server can weigh up to 26.28 kg (57.94 lb).

Before configuring your rack solution, be sure to check the rack manufacturer weight limits and specifications. Failure to do so can result in physical injury or damage to the equipment and the facility.

WARNING

The server is heavy. To reduce the risk of personal injury or damage to the equipment, do the following:

- Observe local occupational health and safety requirements and guidelines for manual material handling.
- Get help to lift and stabilize the product during installation or removal, especially when the product is not fastened to the rails. The server weighs more than 12.57 kg (27.71 lb), so at least two people must lift the server into the enclosure together. An additional person may be required to help align the server if the server is installed higher than chest level.
- Use caution when installing the server in or removing the server from the enclosure.
- Adequately stabilized the enclosure before extending a component outside the enclosure. Extend only one component at a time. A enclosure may become unstable if more than one component is extended.
- Do not stack anything on top of rail-mounted component or use it as a work surface when extended from the rack.

WARNING

To reduce the risk of personal injury or damage to the equipment, be sure that:

- The rack has anti-tip measures in place. Such measures include floor-bolting, anti-tip feet, ballast, or a combination as specified by the rack manufacturer and applicable codes.
- The leveling jacks (feet) are extended to the floor.
- The full weight of the rack rests on the leveling jacks (feet).
- The stabilizing feet are attached to the rack if it is a single-rack installation.
- The racks are coupled together in multiple rack installations.

WARNING

To reduce the risk of personal injury or equipment damage when unloading a rack:

- At least two people are needed to safely unload the rack from the pallet. An empty 42U rack can weigh as much as 115 kg (253 lb), can stand more than 2.1 m (7 ft) tall, and might become unstable when being moved on its casters.
- Never stand in front of the rack when it is rolling down the ramp from the pallet. Always handle the rack from both sides.

CAUTION

Always plan the rack installation so that the heaviest item is on the bottom of the rack. Install the heaviest item first, and continue to populate the rack from the bottom to the top.

CAUTION

Before installing the server in a enclosure, be sure to properly scope the limitations of the enclosure. Before proceeding with the installation, consider the following:

- You must fully understand the static and dynamic load carrying capacity of the enclosure and be sure that it can accommodate the weight of the server.
- Be sure sufficient clearance exists for cabling, installation and removal of the server, and movement of the rack doors.

Server warnings and cautions

WARNING

To reduce the risk of personal injury, electric shock, or damage to the equipment, disconnect the power cord to remove power from the server. Pressing the Power On/Standby button does not shut off system power completely. Portions of the power supply and some internal circuitry remain active until AC power is removed.

WARNING

To reduce the risk of personal injury from hot surfaces, allow the drives and the internal system components to cool before touching them.

WARNING

To reduce the risk of fire or burns after removing the energy pack:

- Do not disassemble, crush, or puncture the energy pack.
- Do not short external contacts.
- Do not dispose of the energy pack in fire or water.
- Do not expose the energy pack to low air pressure as it might lead to explosion or leakage of flammable liquid or gas.
- Do not expose the energy pack to temperatures higher than 60°C (140°F).

After power is disconnected, battery voltage might still be present for 1s to 160s.

CAUTION

Protect the from power fluctuations and temporary interruptions with a regulating UPS. This device protects the hardware from damage caused by power surges and voltage spikes and keeps the in operation during a power failure.

CAUTION

To prevent damage to electrical components, properly ground the server before beginning any installation, removal, or replacement procedure. Improper grounding can cause electrostatic discharge.

CAUTION

To avoid data loss, Hewlett Packard Enterprise recommends that you back up all server data before installing or removing a hardware option, or performing a server maintenance or troubleshooting procedure.

CAUTION

Do not operate the server for long periods with the access panel open or removed. Operating the server in this manner results in improper airflow and improper cooling that can lead to thermal damage.

Electrostatic discharge

Be aware of the precautions you must follow when setting up the system or handling components. A discharge of static electricity from a finger or other conductor may damage system boards or other static-sensitive devices. This type of damage may reduce the life expectancy of the system or component.

To prevent electrostatic damage:

- Avoid hand contact by transporting and storing products in static-safe containers.
- Keep electrostatic-sensitive parts in their containers until they arrive at static-free workstations.
- Place parts on a grounded surface before removing them from their containers.
- Avoid touching pins, leads, or circuitry.
- Always be properly grounded when touching a static-sensitive component or assembly. Use one or more of the following methods when handling or installing electrostatic-sensitive parts:
  - Use a wrist strap connected by a ground cord to a grounded workstation or computer chassis. Wrist straps are flexible straps with a minimum of 1 megohm ±10 percent resistance in the ground cords. To provide proper ground, wear the strap snug against the skin.
  - Use heel straps, toe straps, or boot straps at standing workstations. Wear the straps on both feet when standing on conductive

floors or dissipating floor mats.

- Use conductive field service tools.
- Use a portable field service kit with a folding static-dissipating work mat.

If you do not have any of the suggested equipment for proper grounding, have an authorized reseller install the part.

For more information on static electricity or assistance with product installation, contact an authorized reseller.

POST screen options

About this task

When the server is powered on, the POST screen is displayed. The following options are displayed:

- System Utilities (F9)
  Use this option to configure the system BIOS.
- Intelligent Provisioning (F10)
  Use this option to deploy an operating system or configure storage.
- Boot menu (F11)
  Use this option to make a one-time boot selection.
- Network boot (F12)
  Use this option to boot the server from the network.

Hardware options installation

This chapter provides detailed instructions on how to install hardware options.

For more information on supported options, see the product QuickSpecs on the HPE ProLiant DL345 Gen10 Plus Server website at:

https://www.hpe.com/servers/dl345-gen10-plus

To view the warranty for your server and supported options, see Warranty information.

Subtopics

Hardware option installation guidelines
Rack rail option
Cable management arm option
Installing the bezel and bezel lock
Drive options
Power supply options
Installing a front 8 SFF drive cage option
Installing the rear 2 SFF drive backplane option
Installing the front 4 LFF drive backplane option
Fan option
Memory options
Storage controller options
Energy pack options
Riser and riser cage options
Expansion slots
M.2 SSD options

Installing an OCP NIC 3.0 adapter
Installing the chassis intrusion detection switch
Installing the serial port option
HPE Trusted Platform Module 2.0 Gen10 Plus option

Hardware option installation guidelines

WARNING

To reduce the risk of personal injury from hot surfaces, allow the drives and the internal system components to cool before touching them.

CAUTION

To prevent damage to electrical components, properly ground the server before beginning any installation procedure. Improper grounding can cause electrostatic discharge.

- Install any hardware options before initializing the server.
- If multiple options are being installed, read the installation instructions for all the hardware options to identify similar steps and streamline the installation process.
- If the hardware option installation involves internal cabling, review the Cabling guidelines.

Rack rail option

The rack rail option can be installed in round-hole, square-hole, or threaded-hole racks. For installation instructions, see the Hewlett Packard Enterprise website:

https://www.hpe.com/support/DL385Gen10Plus-rack

Cable management arm option

Install the cable management arm (CMA) option to manage the cables connected to the back of the server. The CMA also allows extending the server from the rack without powering down the server or disconnecting the rear cables. For installation instructions, see the Hewlett Packard Enterprise website:

https://www.hpe.com/support/DL385Gen10Plus-cma

Installing the bezel and bezel lock

About this task

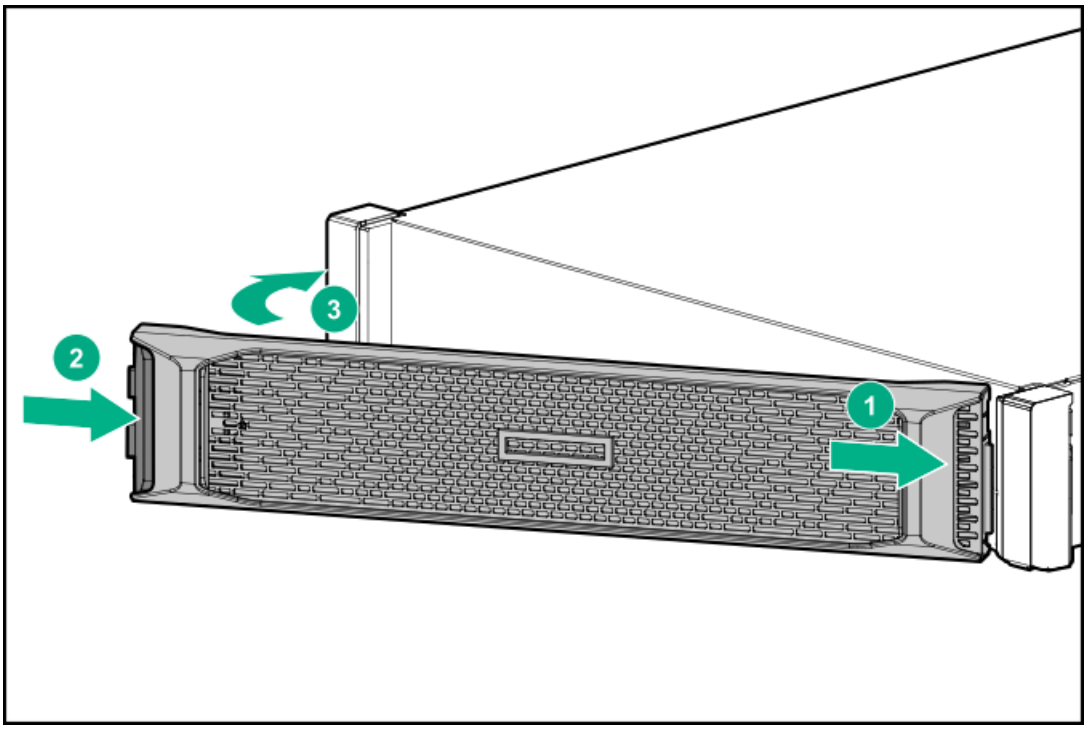

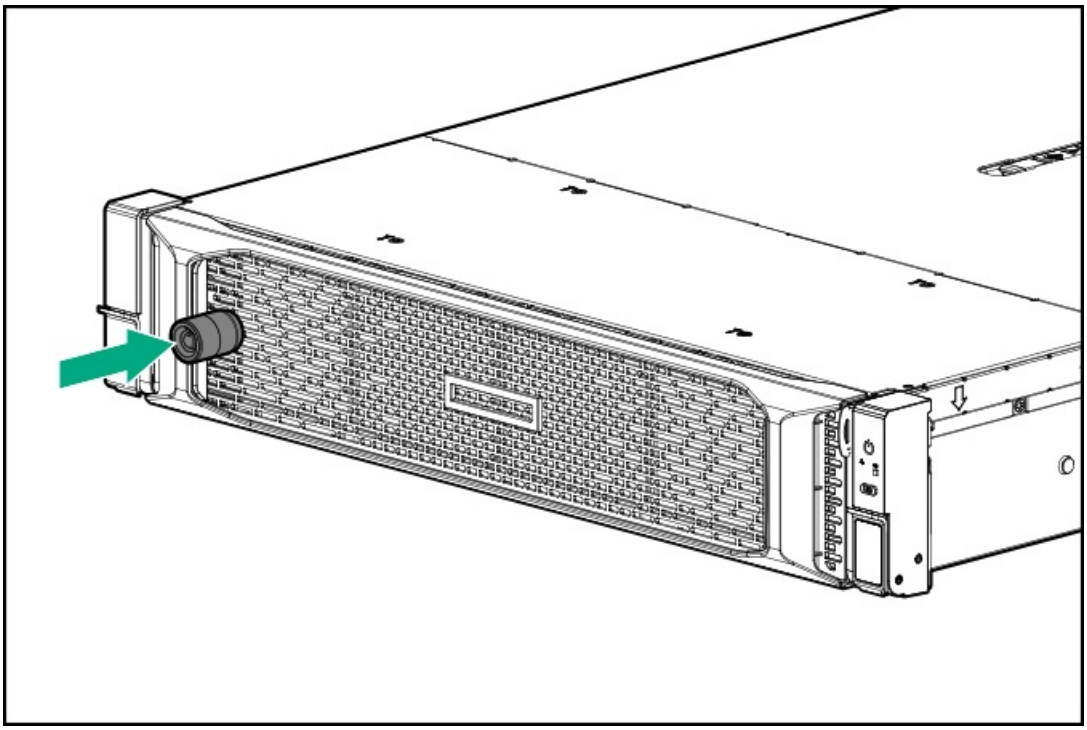

Drive options

Depending on the drive backplane installed, the server supports the following drive types:

- Hot-plug LFF SATA and SAS drives
- Hot-plug SFF SATA, SAS, U.2 NVMe, and U.3 NVMe drives

The embedded HPE SR100i Gen10 Plus Software RAID Controller supports direct attached SATA and NVMe drives. Software RAID is supported in specific drive bays.

- 8 LFF SATA: The drives in boxes 2 and 3 connected to the NVMe/SATA port 8A are covered in SATA software RAID.
- 8 SFF SATA: All box 3 drives connected to the NVMe/SATA port 8A supports SATA software RAID.
- 8 SFF SATA + 2 SFF NVMe:
  - All box 3 drives connected to the NVMe/SATA port 8A supports SATA software RAID.
  - All box 4 drives connected to the NVMe port 4A supports NVMe software RAID.
- 8 and 16 SFF NVMe: The box 2, drives 5–6 connected to the NVMe port 4A supports NVMe software RAID.
- 24 SFF NVMe: The box 3, drive bays 1–2 connected to the NVMe port 4A supports NVMe software RAID.

Install an HPE type-a modular (AROC) or type-p PCIe plug-in storage controller option for hardware RAID support for NVMe, SAS, and SATA drives.

Subtopics

Drive installation guidelines
Installing a hot-plug SAS, SATA or NVMe drive

Drive installation guidelines

Observe the following general guidelines:

- The system automatically sets all drive numbers.

  CAUTION

  When a server is purchased without any drive installed, some drive bays might be empty while other drive bays might be populated with drive blanks.

  To maintain proper system cooling, do not operate the server without a drive or a drive blank installed.

- If only one drive is used, install it in the bay with the lowest drive number.
  For drive numbering, see Drive bay numbering.
- This server does not support mixed drive types in the same drive box.
- When installing NVMe drives, install either all U.2 or all U.3 drives. Mixed NVMe type installation is not supported.
- When a Gen10 Plus tri-mode controller is used together with a U.3 drive backplane, the system will support mixed drive configuration.
- Drives with the same capacity provide the greatest storage space efficiency when grouped into the same drive array.

Installing a hot-plug SAS, SATA or NVMe drive

About this task

CAUTION

To prevent improper cooling and thermal damage, do not operate the server unless all drive and device bays are populated with either a component or a blank.

Procedure

1. Remove the drive blank:

- LFF drive blank

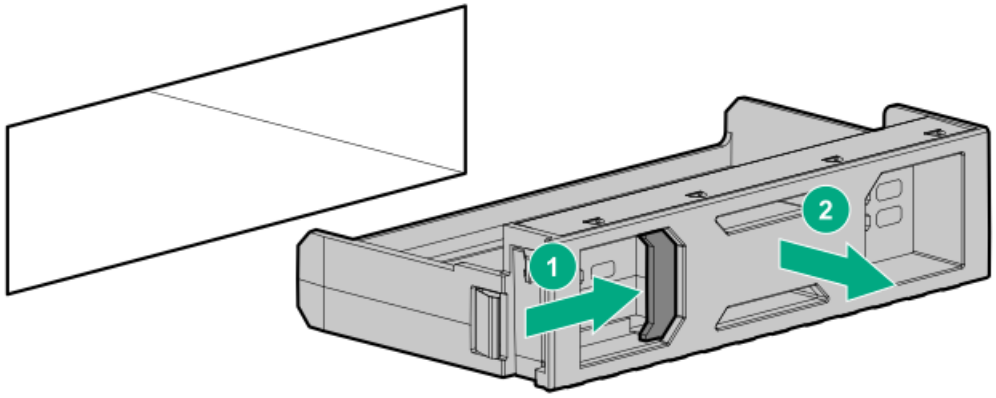

- SFF drive blank

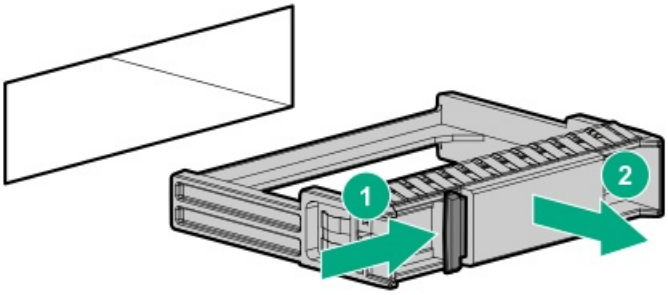

2. Prepare the drive.
   - LFF drive

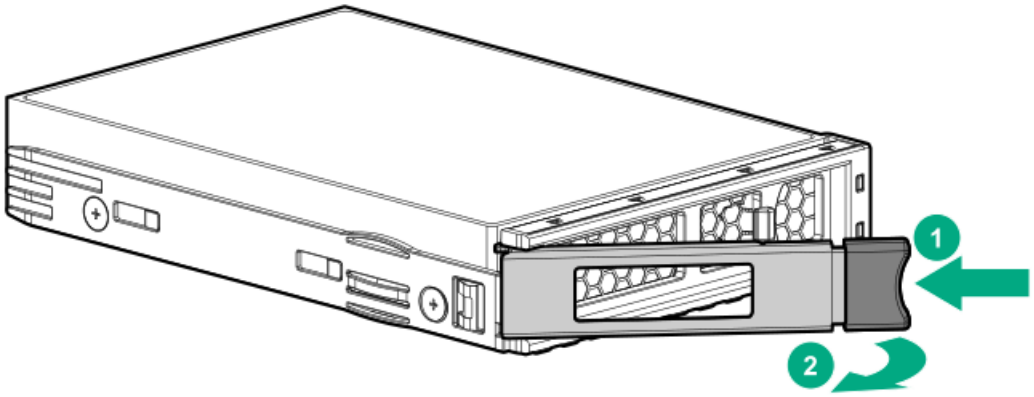

   - SFF drive

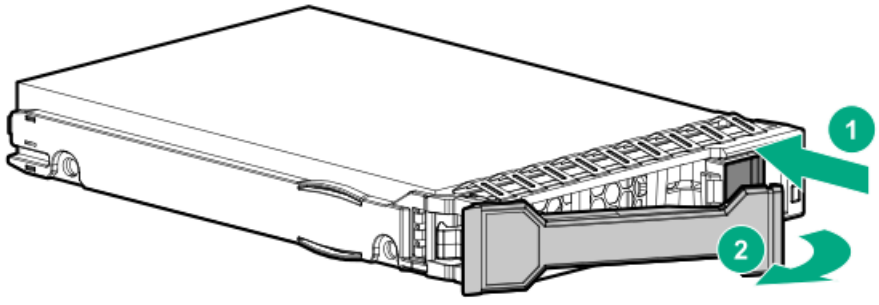

3. Install the drive.
   - LFF drive

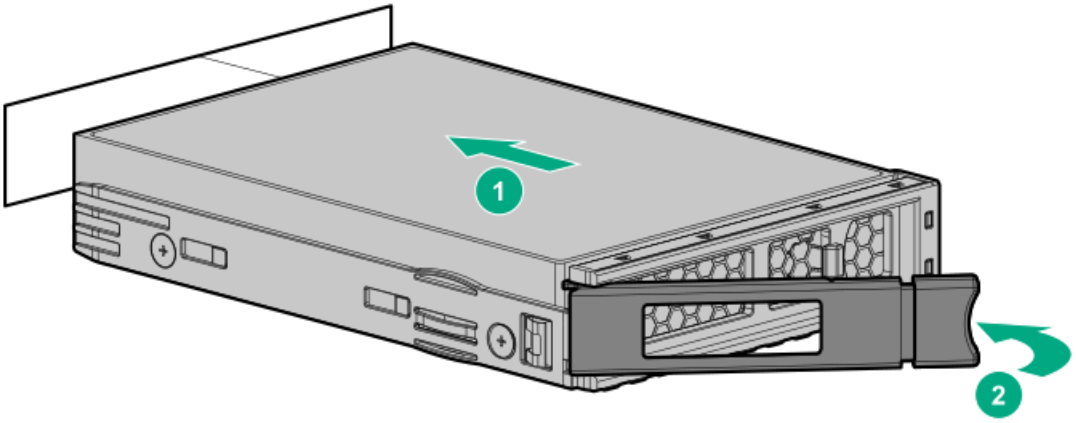

- SFF drive

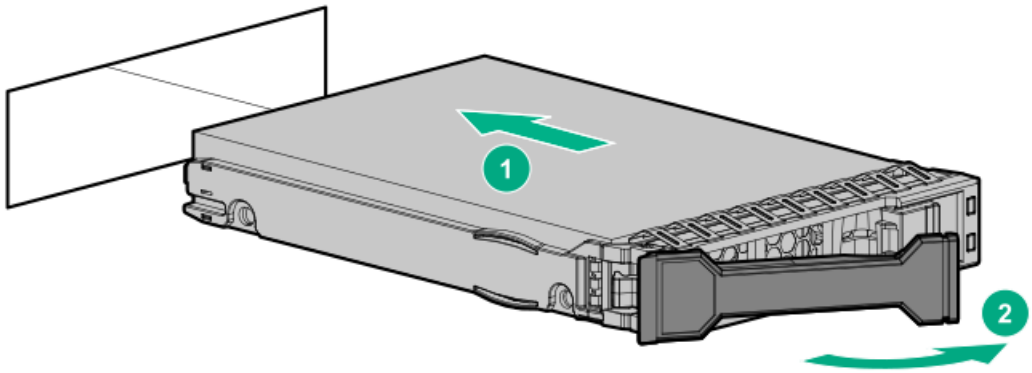

4. Determine the status of the drive from the drive LED definitions .
5. To configure drive arrays, see the following documentation for detailed instructions:
   - HPE SR Gen10 Plus Software RAID User Guide at **https://www.hpe.com/support/SSC-SRGen10Plus-ug**
   - HPE SmartRAID SR Gen10 Plus Controller User Guide at **https://www.hpe.com/info/SmartRAID-Gen10Plus-UG**
   - HPE MegaRAID MR Gen10 Plus Controller User Guide at **https://www.hpe.com/info/MegaRAID-Gen10Plus-UG**

Power supply options

Depending on the installed options and the regional location where the server was purchased, the server can be configured with one of the supported power supplies.

Subtopics

Hot-plug power supply calculations
Power supply warnings and cautions
Installing a hot-plug AC power supply
Installing the HPE 800 W Flex Slot -48 VDC hot-plug power supply
Installing the HPE 1600 W Flex Slot -48 VDC hot-plug power supply
Connecting a DC power cable to a DC power source

Hot-plug power supply calculations

For more information on the hot-plug power supply and calculators to determine server power consumption in various system configurations, see the Hewlett Packard Enterprise Power Advisor website (https://www.hpe.com/info/poweradvisor/online).

Power supply warnings and cautions

WARNING

To reduce the risk of electric shock or damage to the equipment:

- Do not disable the power cord grounding plug. The grounding plug is an important safety feature.
- Plug the power cord into a grounded (earthed) electrical outlet that is easily accessible at all times.
- Unplug the power cord from the power supply to disconnect power to the equipment.
- Do not route the power cord where it can be walked on or pinched by items placed against it. Pay particular attention to the plug, electrical outlet, and the point where the cord extends from the server.

WARNING

To reduce the risk of injury from electric shock hazards, do not open power supplies. Refer all maintenance, upgrades, and servicing to qualified personnel

CAUTION

Mixing different types of power supplies in the same server might:

- Limit or disable some power supply features including support for power redundancy.
- Cause the system to become unstable and might shut down.

To ensure access to all available features, all power supplies in the same server should have the same output and efficiency ratings. Verify that all power supplies have the same part number and label color.

Installing a hot-plug AC power supply

About this task

WARNING

To reduce the risk of personal injury, fire, or damage to the equipment, do not overload the AC supply branch circuit that provides power to the rack. Consult the electrical authority having jurisdiction over wiring and installation requirements of your facility.

WARNING

To reduce the risk of personal injury from hot surfaces, allow the drives, power supplies, and internal system components to cool before touching them.

CAUTION

To prevent improper cooling and thermal damage, do not operate the enclosure unless all device bays are populated with either a component or a blank.

Procedure

1. Remove the power supply blank.

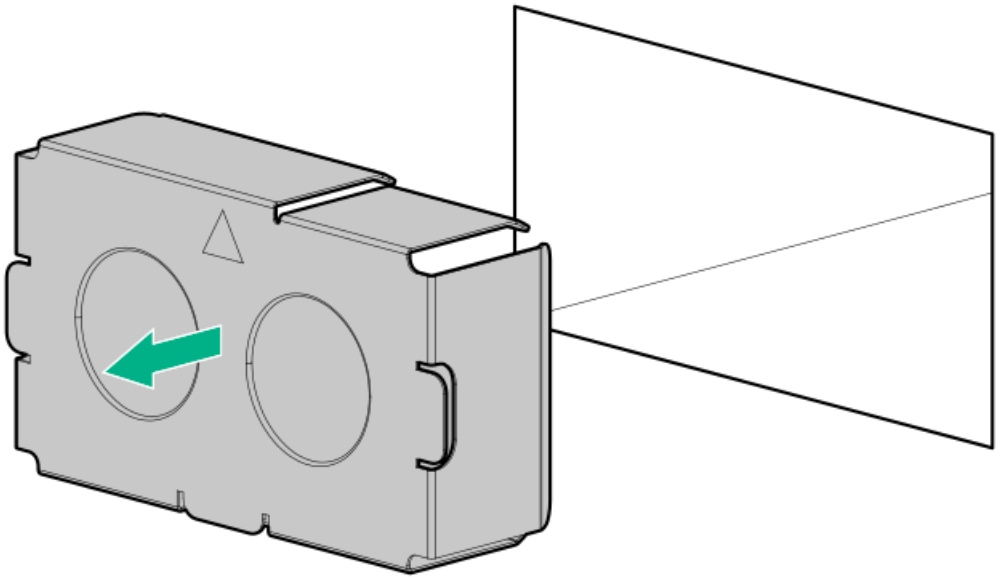

2. Slide the power supply into the bay until it clicks into place.

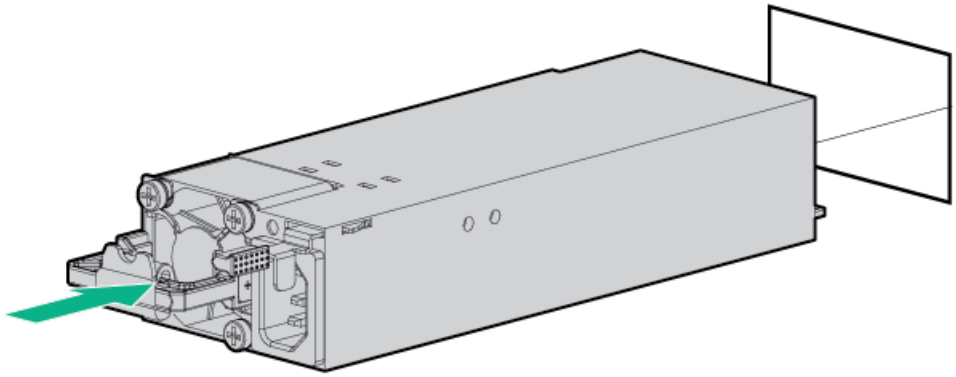

3. Connect the power cord to the power supply.
4. Secure the power cord in the strain relief strap attached to the power supply handle:
   a. Unwrap the strain relief strap from the power supply handle.

> **CAUTION**
>
> Avoid tight bend radii to prevent damaging the internal wires of a power cord or a server cable. Never bend power cords and server cables tight enough to cause a crease in the sheathing.

   b. Secure the power cord with the strain relief strap. Roll the extra length of the strap around the power supply handle.

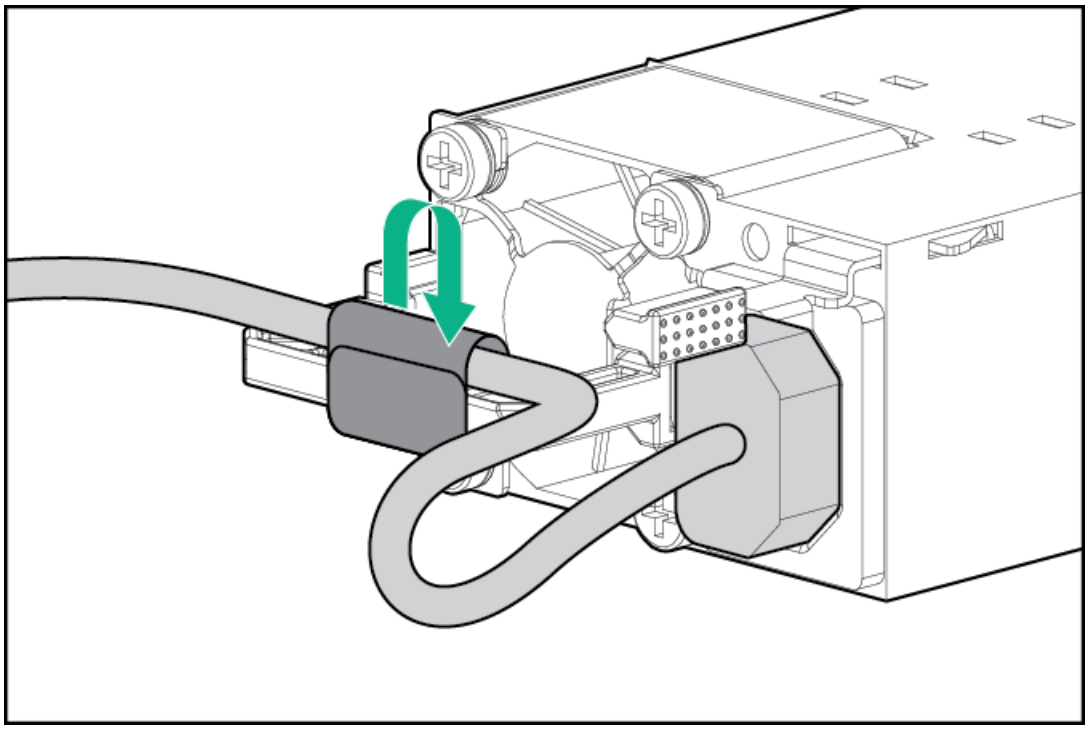

5. Connect the power cord to the power source.
6. Be sure that the power supply LED is green.

Installing the HPE 800 W Flex Slot -48 VDC hot-plug power supply

Prerequisites

Before you install this option, make sure that you have the following items available:

- No. 1 Phillips screwdriver
- Optional Q0H80A HPE 800W DC Power Cable Kit can be purchased from an HPE authorized reseller.
- If you are not using an input power cord option, the power supply cabling must be made in consultation with a licensed electrician and be compliant with local code.
- If you are replacing the factory installed ground lug, use the KST RNB5-5 crimp terminal ring or equivalent. Use an M5-0.80 x 8 screw to attach the ground lug to the power supply.

About this task

The DC power supply option kits do not ship with a Power Supply DC cable Kit and may not include a Power Supply Cable Lug kit. The optional DC Cable kit or the optional DC Cable Lug Kit may be purchased directly from Hewlett Packard Enterprise or an authorized HPE reseller. For additional information, refer to the power supply QuickSpecs at **https://www.hpe.com/info/fsps-qs**.

WARNING

To reduce the risk of electric shock, fire, and damage to the equipment, you must install this product in accordance with the following guidelines:

- The HPE 800 W Flex Slot -48 VDC hot-plug power supply is intended only for installation in Hewlett Packard Enterprise servers located in a restricted access location.
- The HPE 800 W Flex Slot -48 VDC hot-plug power supply is not intended for direct connection to the DC supply branch circuit. Only connect this power supply to a power distribution unit (PDU) that provides an independent overcurrent-protected output for each DC power supply. Each output overcurrent-protected device in the PDU must be suitable for interrupting fault current available from the DC power source and must be rated no more than 30 A.
- The PDU output must have a shut-off switch or a circuit breaker to disconnect power for each power supply. To completely remove power from the power supply, disconnect power at the PDU. Disconnect the power for each power supply, if there are multiple power supplies.
- In accordance with applicable national requirements for Information Technology Equipment and Telecommunications Equipment, this power supply only connects to DC power sources that are classified as SELV or TNV. Generally, these requirements are based on the International Standard for Information Technology Equipment, IEC 60950-1/IEC 62368-1. In accordance with local and regional electric codes and regulations, the DC source must have one pole (Neutral/Return) reliably connected to earth ground.
- You must connect the power supply ground screw located on the front of the power supply to a suitable ground (earth) terminal. In accordance with local and regional electric codes and regulations, this terminal must be connected to a suitable building ground (earth) terminal. Do not rely on the rack or cabinet chassis to provide adequate ground (earth) continuity.

Procedure

1. Remove the power supply blank.

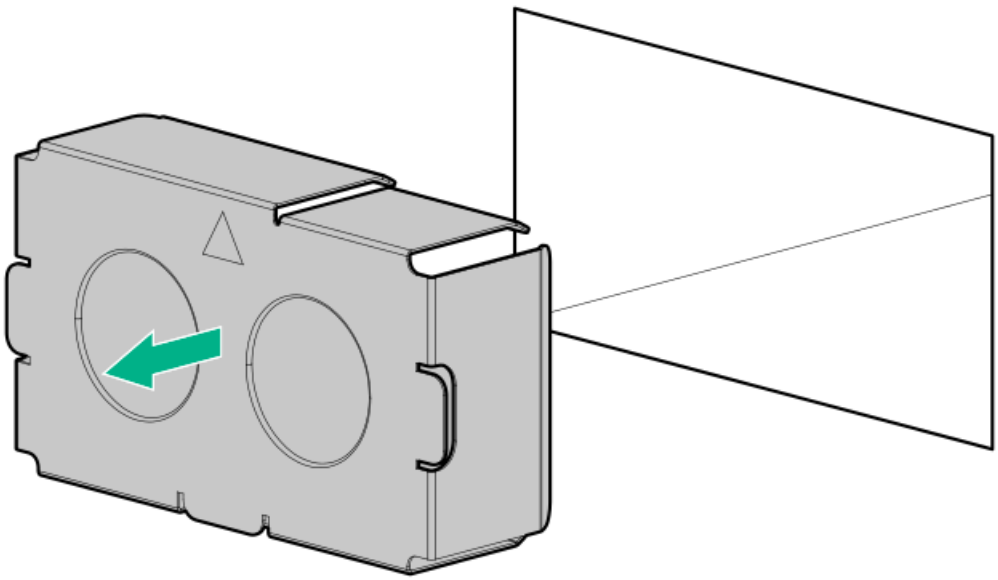

2. Remove the ring tongue.

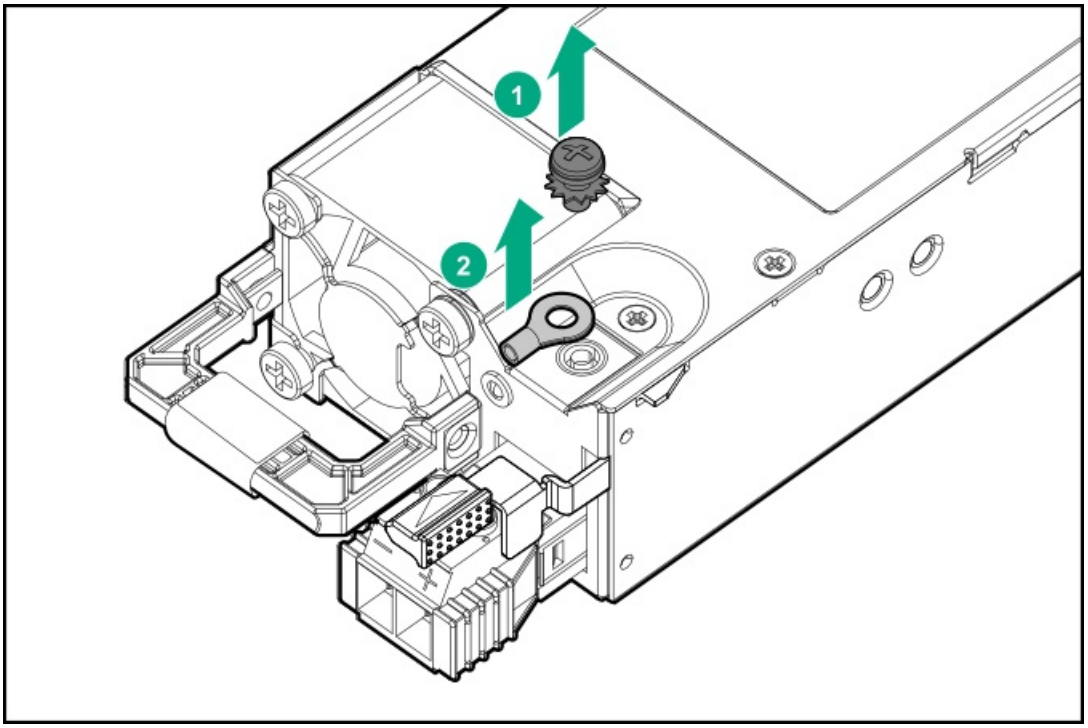

3. Crimp the ring tongue to the ground cable from the -48 V DC power source.

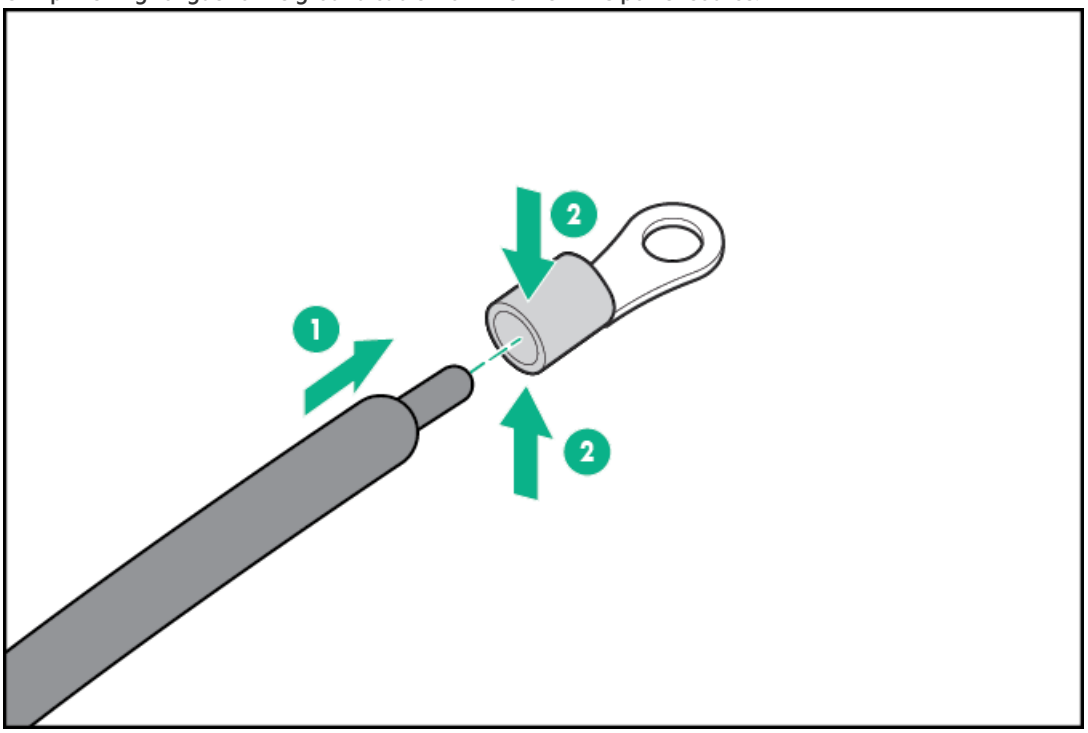

4. Remove the terminal block connector.

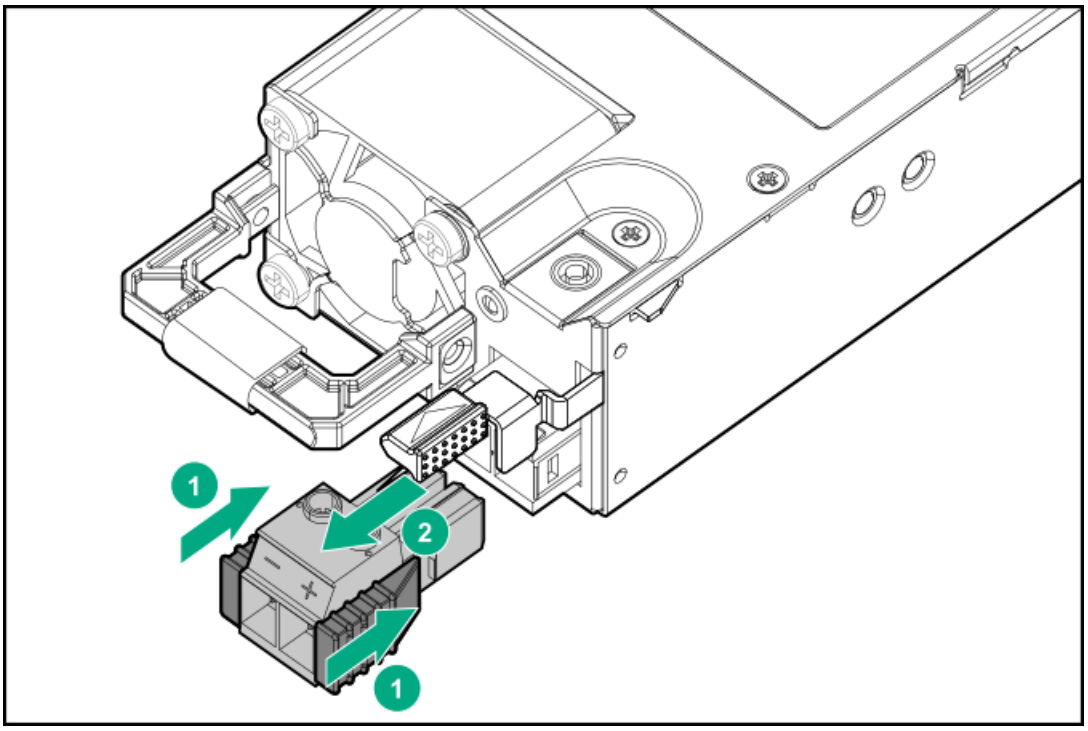

5. Loosen the screws on the terminal block connector.

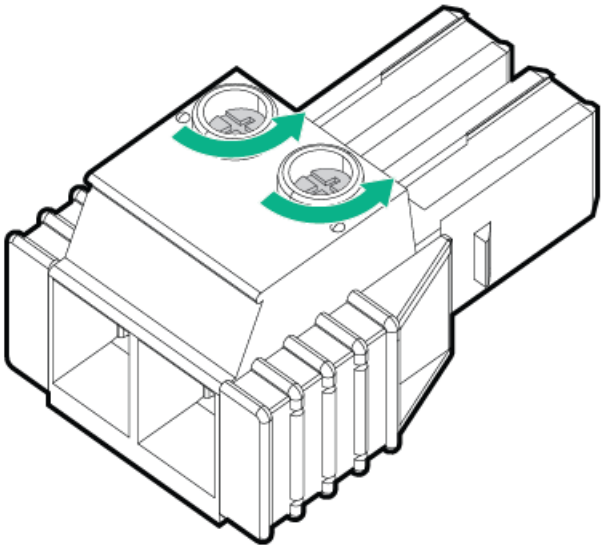

6. Attach the ground (earthed) wire to the ground screw and washer and tighten to 1.47 N m (13 lb-in) of torque. The ground wire must be connected before the -48 V wire and the return wire.

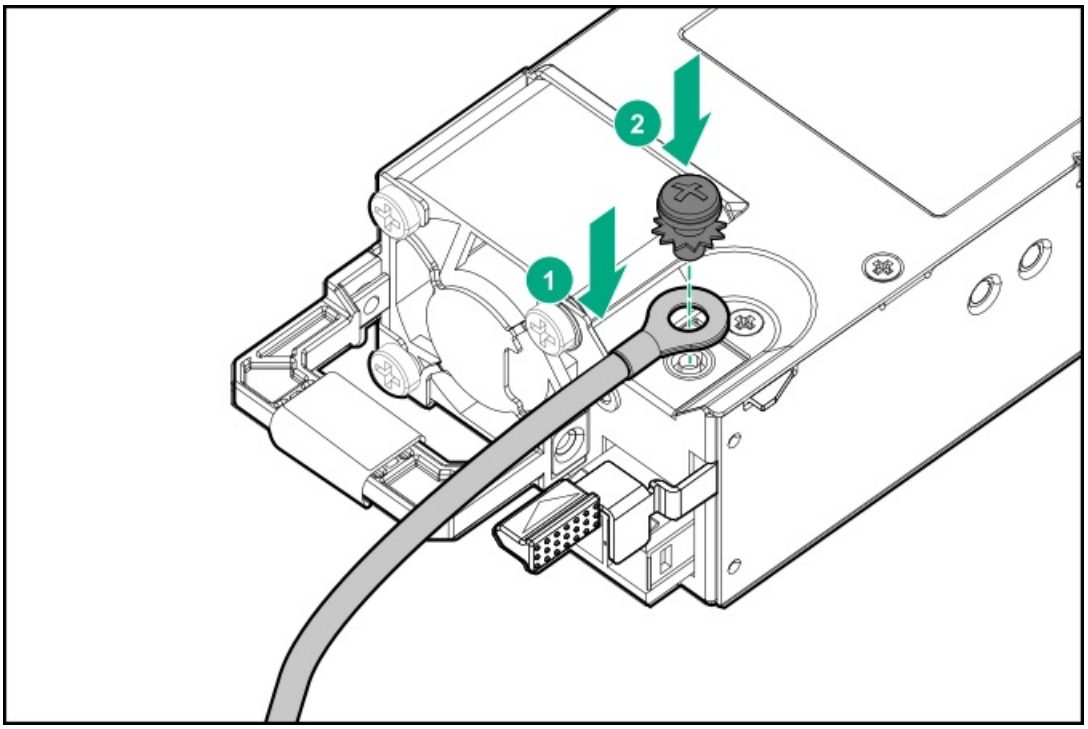

7. Insert the -48 V wire into the left side of the terminal block connector, and then tighten the screw to 1.3 N m (10 lb-in) of torque.

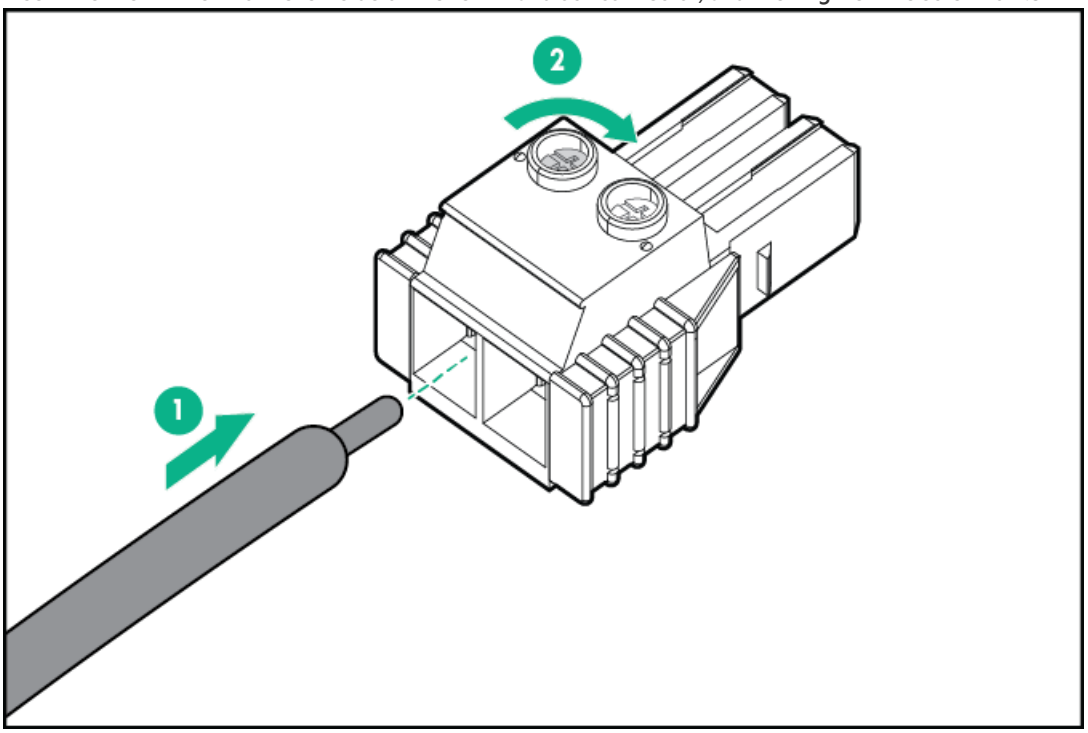

8. Insert the return wire into the right side of the connector, and then tighten the screw to 1.3 N m (10 lb-in) of torque.

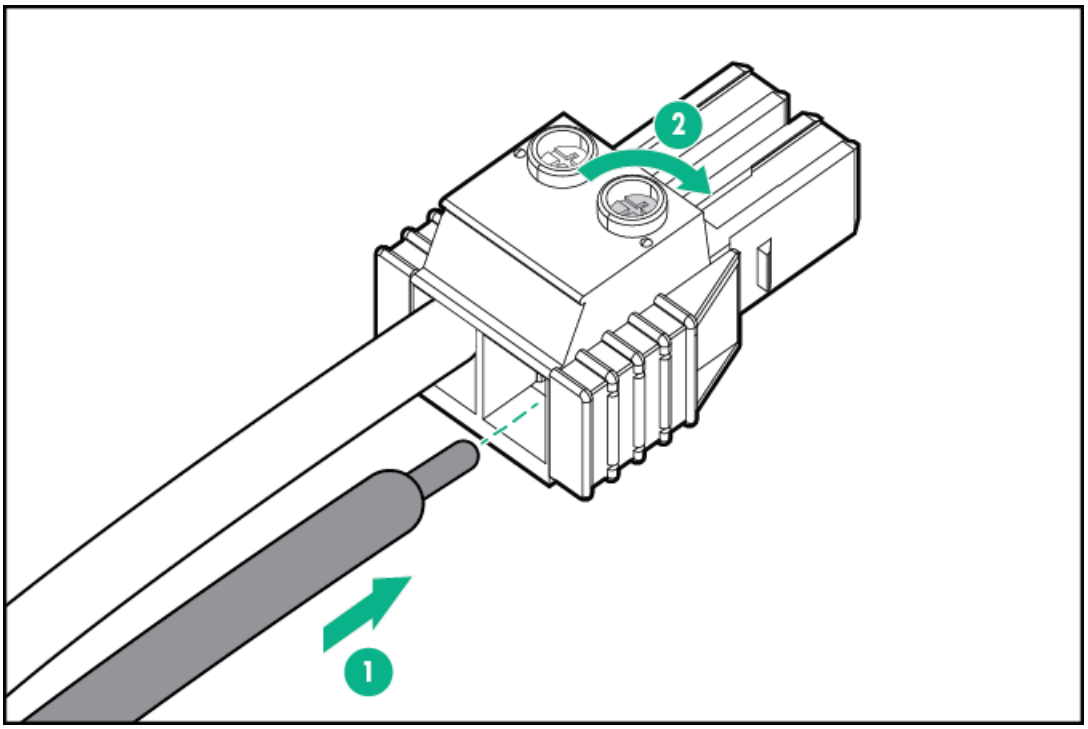

9. Install the terminal block connector into the power supply.

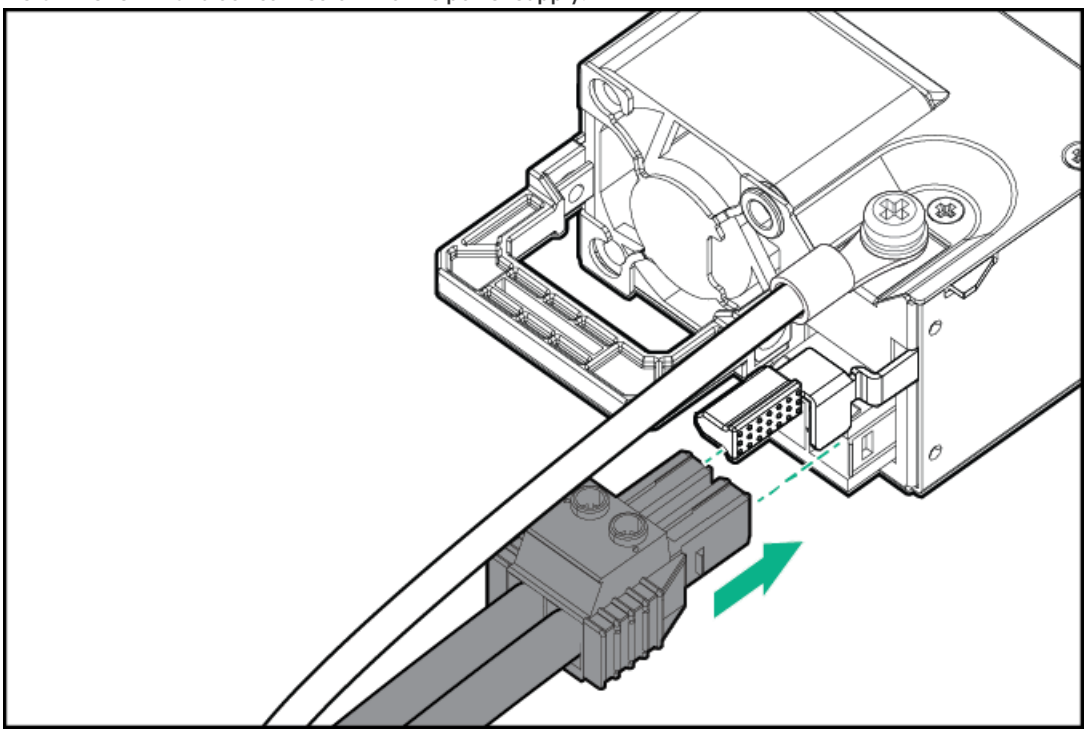

10. Secure the power cord, wires, and/or cables in the strain relief strap attached to the power supply handle:

    a. Unwrap the strain relief strap from the power supply handle.

> **CAUTION**
>
> Avoid tight bend radii to prevent damaging the internal wires of a power cord or a server cable. Never bend power cords and server cables tight enough to cause a crease in the sheathing.

    b. Secure the power cord, wires, and cables with the strain relief strap. Roll the extra length of the strap around the power supply handle.

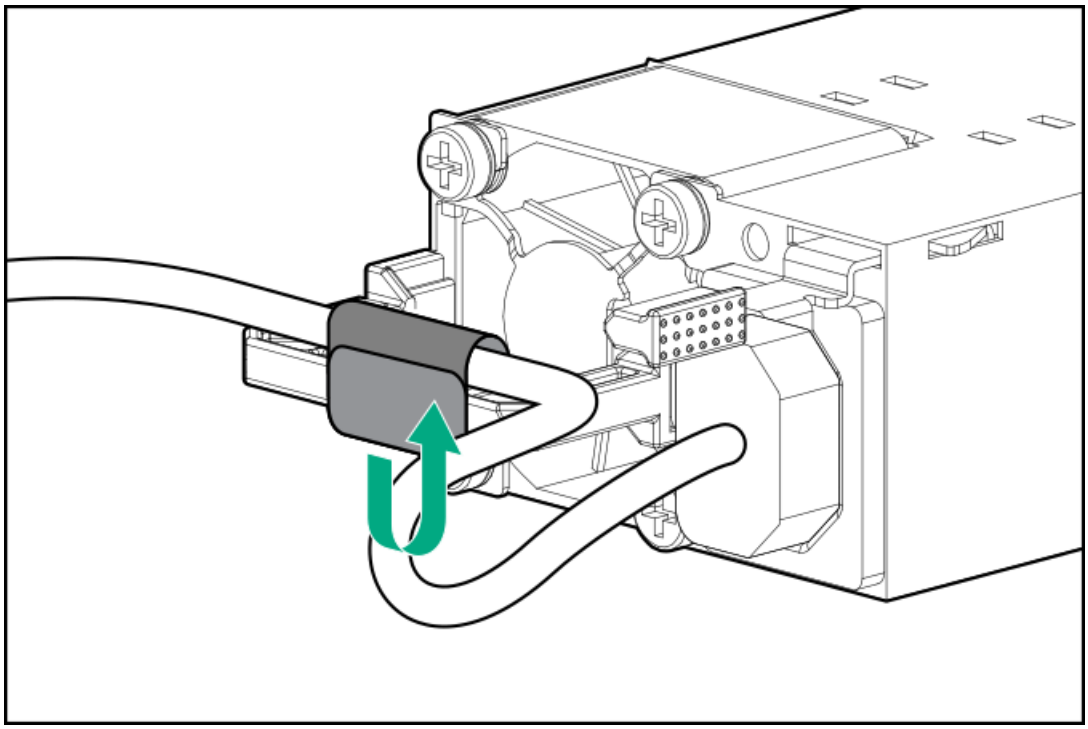

11. Slide the power supply into the bay until it clicks into place.

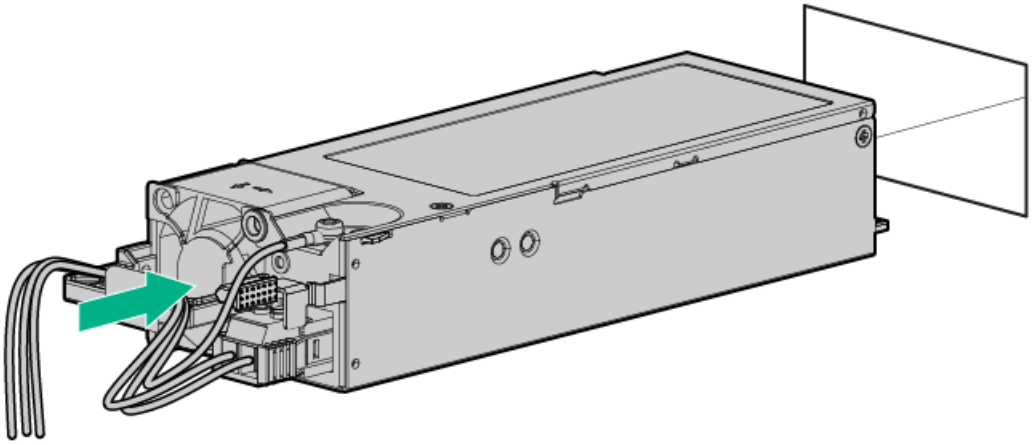

12. Make sure the -48 V DC power source is off or the PDU breaker is in the off position, and then connect the power cord to the -48 V DC power source or PDU.
13. To supply -48 V to the power supply, turn on the -48 V power source or switch the PDU breaker to the on position.
14. Be sure that the power supply LED is green.

Installing the HPE 1600 W Flex Slot -48 VDC hot-plug power supply

Prerequisites

Before you install this option, make sure that you have the following items available:

- No. 1 Phillips screwdriver
- If you are not using an input power cord option, the power supply cabling must be made in consultation with a licensed electrician and be compliant with local code.
- Optional P36877-B21 HPE lug kit can be purchased from an HPE authorized reseller for use with customer-supplied power cables. (The

power cable and lug kit listed below can only be used with the 1600 W -48 VDC power supply.)

- If you are using an input power cord option, the P22173-B21 HPE 1600 W DC PSU power cable kit can be purchased from an authorized HPE reseller. (The power cable and lug kit listed below can only be used with the 1600 W -48 VDC power supply.)

1600 W -48VDC power cable color codes

Cable color	Description
Black	Positive return
Red	Negative input voltage
Green/yellow	Safety ground

About this task

The DC power supply option kits do not ship with a Power Supply DC cable Kit and may not include a Power Supply Cable Lug kit. The optional DC Cable kit or the optional DC Cable Lug Kit may be purchased directly from Hewlett Packard Enterprise or an authorized HPE reseller. For additional information, refer to the power supply QuickSpecs at **https://www.hpe.com/info/fsps-qs**.

WARNING

To reduce the risk of electric shock, fire, and damage to the equipment, you must install this product in accordance with the following guidelines:

- **The HPE 1600 W Flex Slot -48 VDC hot-plug power supply is intended only for installation in Hewlett Packard Enterprise servers located in a restricted access location.**
- **The HPE 1600 W Flex Slot -48 VDC hot-plug power supply is not intended for direct connection to the DC supply branch circuit. Only connect this power supply to a power distribution unit (PDU) that provides an independent overcurrent-protected output for each DC power supply. Each output overcurrent-protected device in the PDU must be suitable for interrupting fault current available from the DC power source and must be rated no more than 45 A.**
- **The PDU output must have a shut-off switch or a circuit breaker to disconnect power for each power supply. To completely remove power from the power supply, disconnect power at the PDU. The end product may have multiple power supplies. To remove all power from the product, disconnect the power for each power supply.**
- **In accordance with applicable national requirements for Information Technology Equipment and Telecommunications Equipment, this power supply only connects to DC power sources that are classified as SELV or TNV. Generally, these requirements are based on the International Standard for Information Technology Equipment, IEC 60950-1/IEC 62368-1. In accordance with local and regional electric codes and regulations, the DC source must have one pole (Neutral/Return) reliably connected to earth ground.**
- **You must connect the power supply ground screw located on the front of the power supply to a suitable ground (earth) terminal. In accordance with local and regional electric codes and regulations, this terminal must be connected to a suitable building ground (earth) terminal. Do not rely on the rack or cabinet chassis to provide adequate ground (earth) continuity.**

Procedure

1. If necessary, remove the power supply blank.

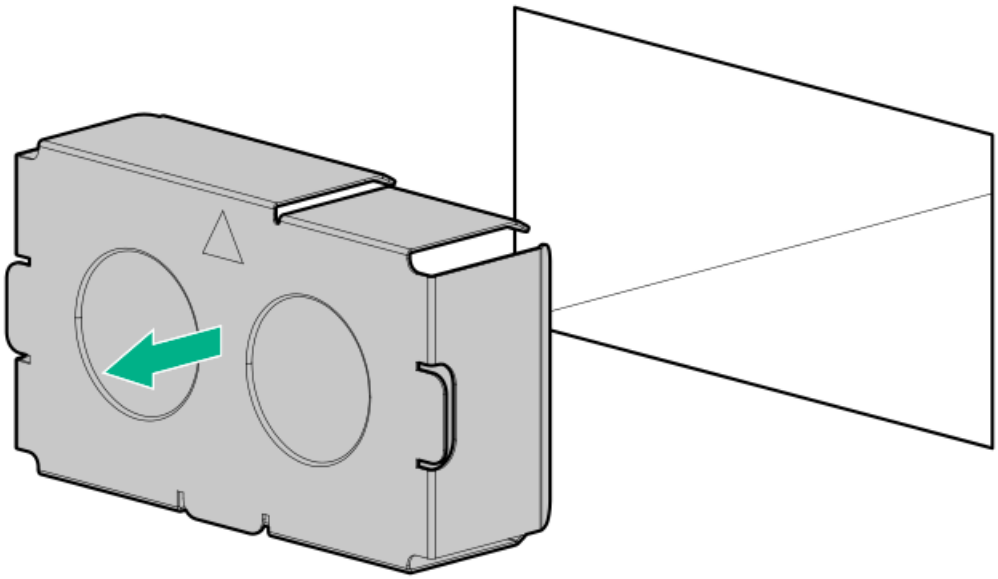

2. Remove the clear plastic cover on the side of the power supply.

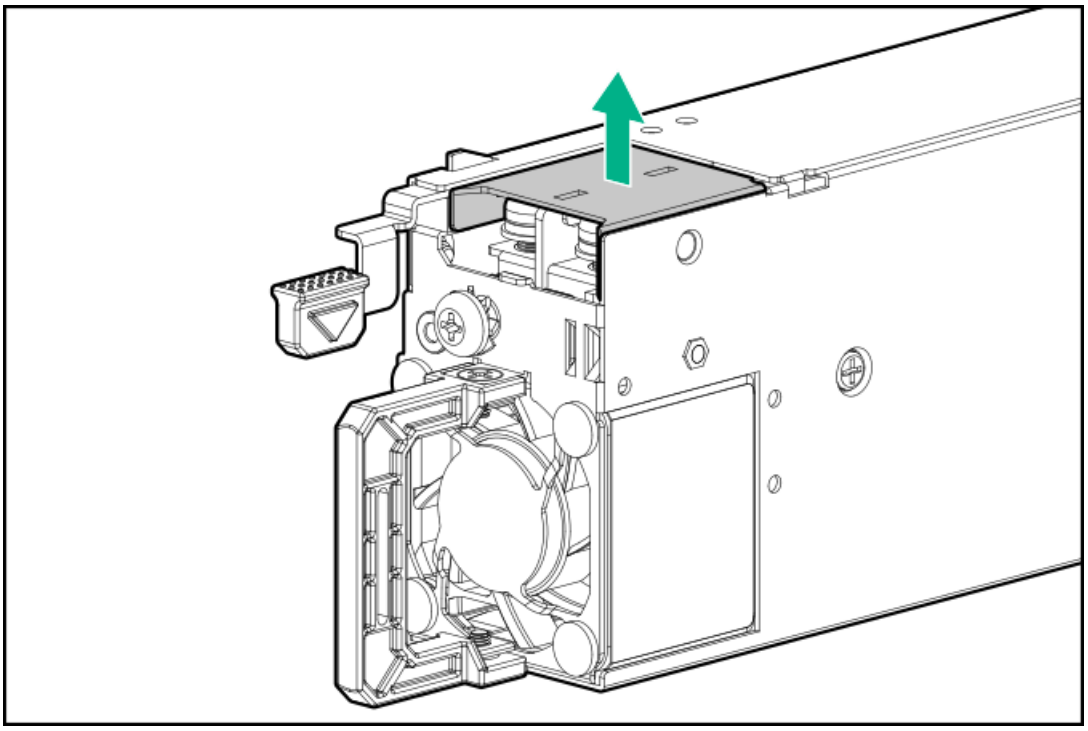

3. Do the following:
   a. Remove the grounding screw from the front of the power supply.
   b. Remove the four screws from the -48 V wire and return wire connectors.

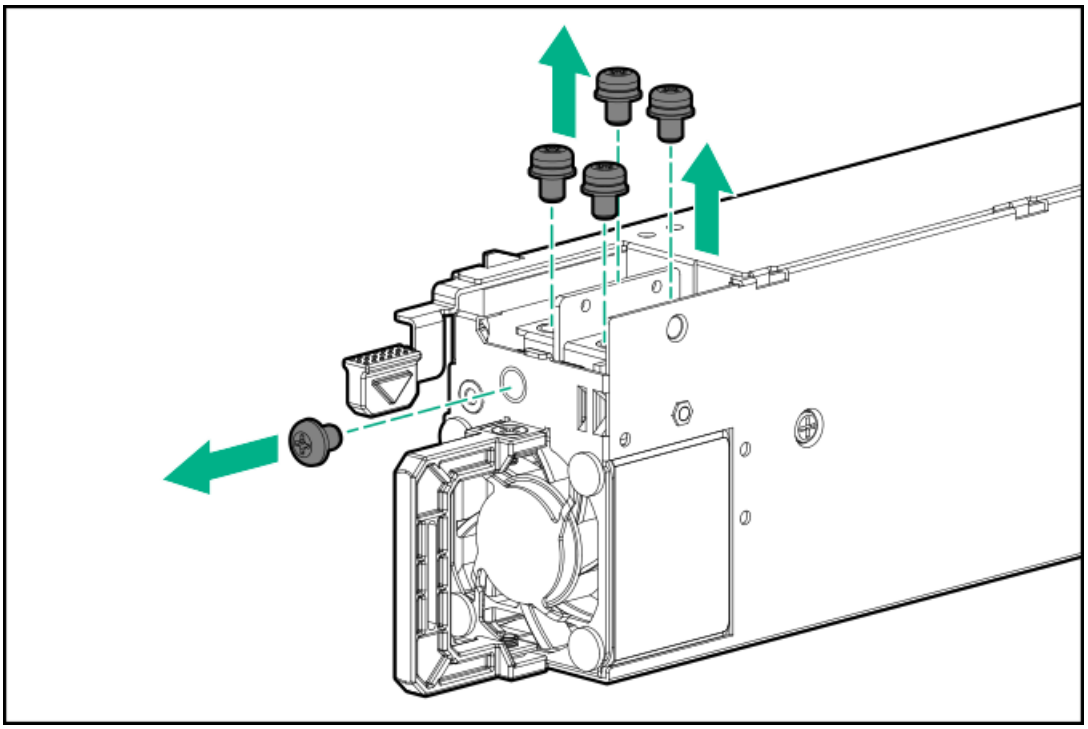

4. Attach the -48 V wire and the return wire to the connectors as marked and tighten to 0.98 N m (8.68 lb-in) of torque.

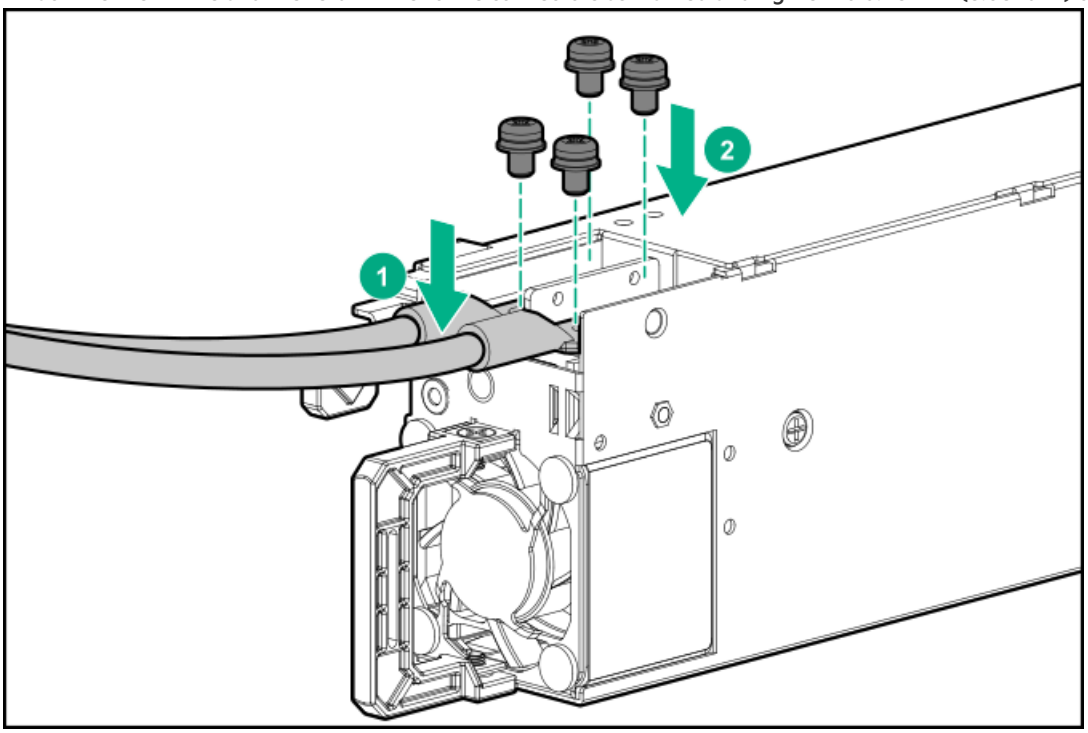

5. Attach the ground (earthed) wire to the ground screw and tighten to 1.47 N m (13 lb-in) of torque.

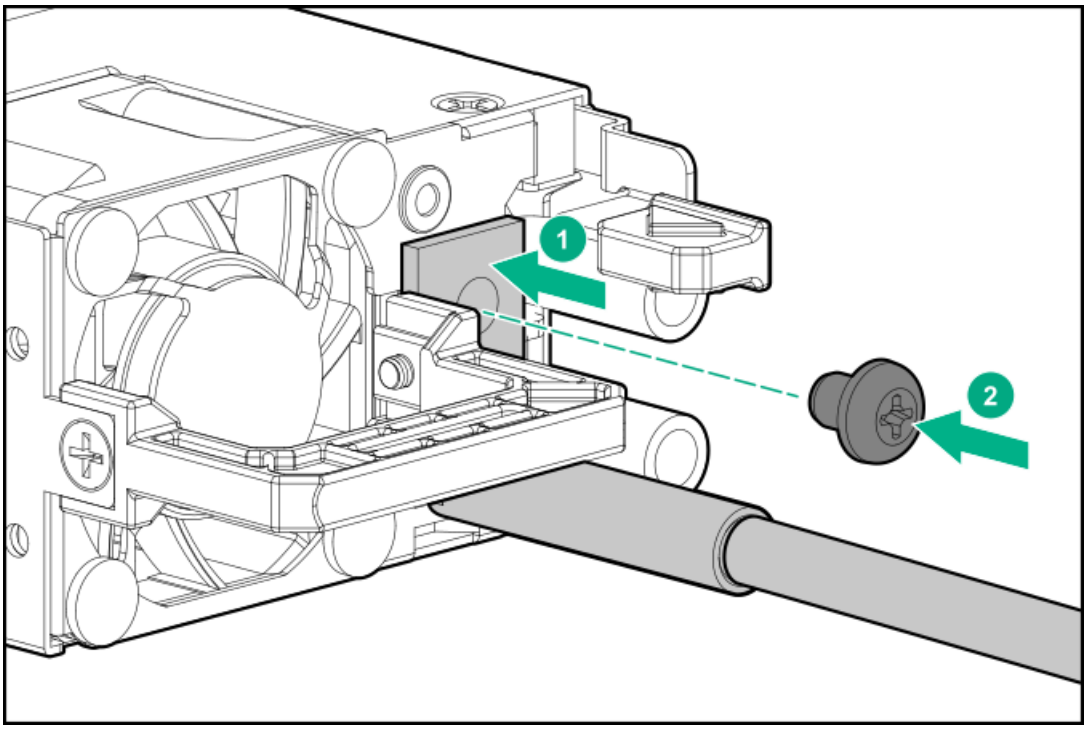

6. Replace the clear plastic cover on the -48 V and return connectors.
7. Secure the power cord, wires, and/or cables in the strain relief strap attached to the power supply handle:
   a. Unwrap the strain relief strap from the power supply handle.

> **CAUTION**
>
> Avoid tight bend radii to prevent damaging the internal wires of a power cord or a server cable. Never bend power cords and server cables tight enough to cause a crease in the sheathing.

   b. Secure the wires and cables with the strain relief strap. Roll the extra length of the strap around the power supply handle.

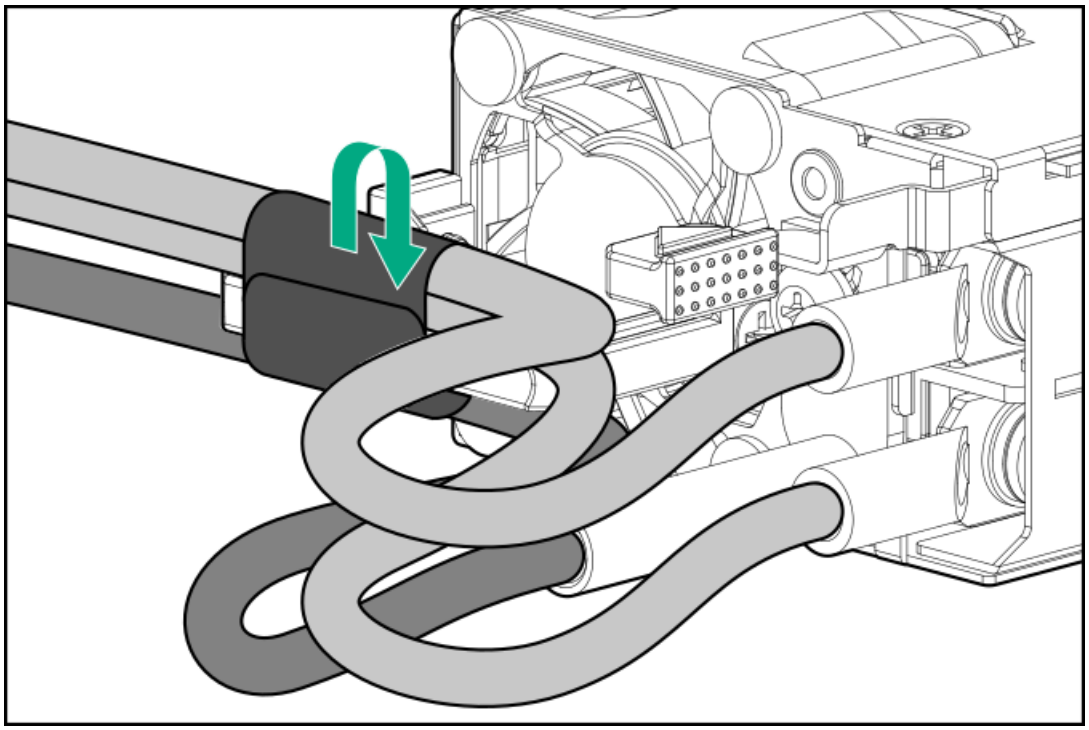

8. Slide the power supply into the bay until it clicks into place.
9. Make sure the -48 VDC power source is off or the PDU breaker is in the off position.
10. Connect the power cord to the -48 VDC power source or PDU.
11. Turn on the -48 V power source or switch the PDU breaker to the on position to supply -48 V to the power supply.
12. Make sure that the power supply LED is green.

Connecting a DC power cable to a DC power source

About this task

WARNING

To reduce the risk of electric shock or energy hazards:

- This equipment must be installed by trained service personnel, as defined by the NEC and IEC 60950-1/IEC 62368-1, the standard for Safety of Information Technology Equipment.
- Connect the equipment to a reliably grounded secondary circuit source. A secondary circuit has no direct connection to a primary circuit and derives its power from a transformer, converter, or equivalent isolation device.
- The overcurrent protection for the DC source must not exceed 45 A.

WARNING

When installing a DC power supply, the ground wire must be connected before the positive or negative leads.

WARNING

Remove power from the power supply before performing any installation steps or maintenance on the power supply.

CAUTION

The server equipment connects the earthed conductor of the DC supply circuit to the earthing conductor at the equipment. For more information, see the documentation that ships with the power supply.

CAUTION

If a DC connection exists between the earthed conductor of the DC supply circuit and the earthing conductor at the server equipment, the following conditions must be met:

- This equipment must be connected directly to the DC supply system earthing electrode conductor or to a bonding jumper from an earthing terminal bar or bus to which the DC supply system earthing electrode conductor is connected.
- Locate the equipment in the same immediate area (such as adjacent cabinets) as any other equipment that has a connection between the earthed conductor of the same DC supply circuit and the earthing conductor, and also the point of earthing of the DC system. The DC system must be earthed elsewhere.
- The DC supply source is to be located within the same premises as the equipment.
- Switching or disconnecting devices should not be in the earthed circuit conductor between the DC source and the point of connection of the earthing electrode conductor.

Procedure

1. Cut the DC power cord ends no shorter than 150 cm (59.06 in).

   IMPORTANT

   The ring terminals must be UL approved and accommodate 12 gauge wires.

   IMPORTANT

   The minimum nominal thread diameter of a pillar or stud type terminal must be 3.5 mm (0.138 in). The diameter of a screw type terminal must be 5.0 mm (0.197 in).

2. If the power source requires ring tongues, use a crimping tool to install the ring tongues on the power cord wires.
3. Stack each same-colored pair of wires and then attach them to the same power source. The power cord consists of three wires (black, red, and green).

   For more information, see the documentation that ships with the power supply.

Installing a front 8 SFF drive cage option

Prerequisites

Before you perform this procedure, make sure that you have the following items available:

- High-performance fans are required if installing a premium drive cage.
- T-10 Torx screwdriver
- T-15 Torx screwdriver

Procedure

1. Observe the following alerts.

WARNING

To reduce the risk of personal injury from hot surfaces, allow the drives and the internal system components to cool before touching them.

CAUTION

To prevent damage to electrical components, properly ground the server before beginning any installation procedure. Improper grounding can cause ESD.

2. If installed, remove the front bezel.
3. Power down the server.
4. If installed, release the cable management arm.
5. Remove all power:
   a. Disconnect each power cord from the power source.
   b. Disconnect each power cord from the server.
6. Do one of the following:
   - Extend the server from the rack.
   - Remove the server from the rack.
7. Remove the access panel.
8. Remove the fan cage.
9. Remove the air baffle.
10. Remove the blank.

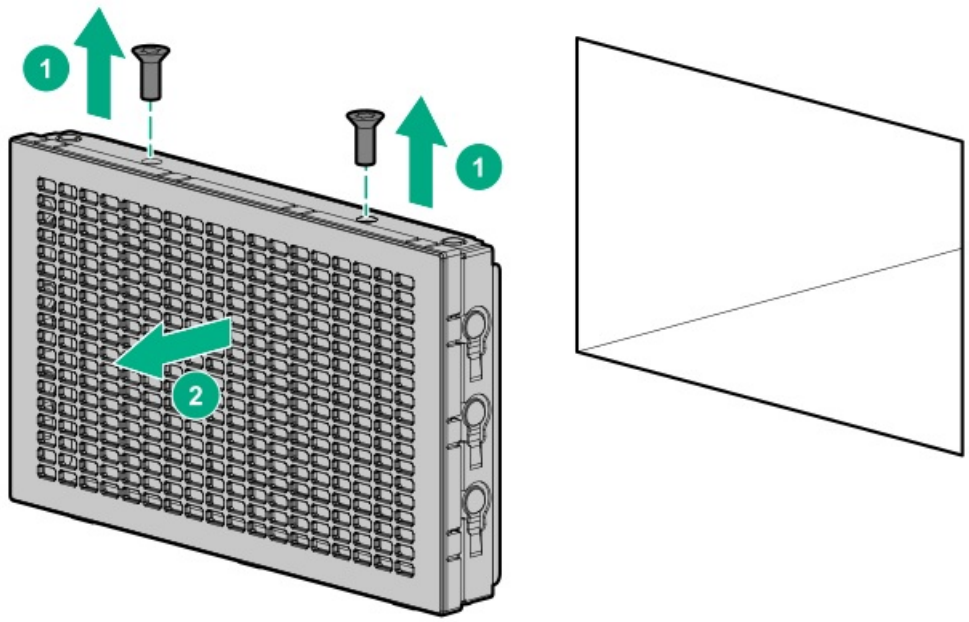

11. Install the drive cage.

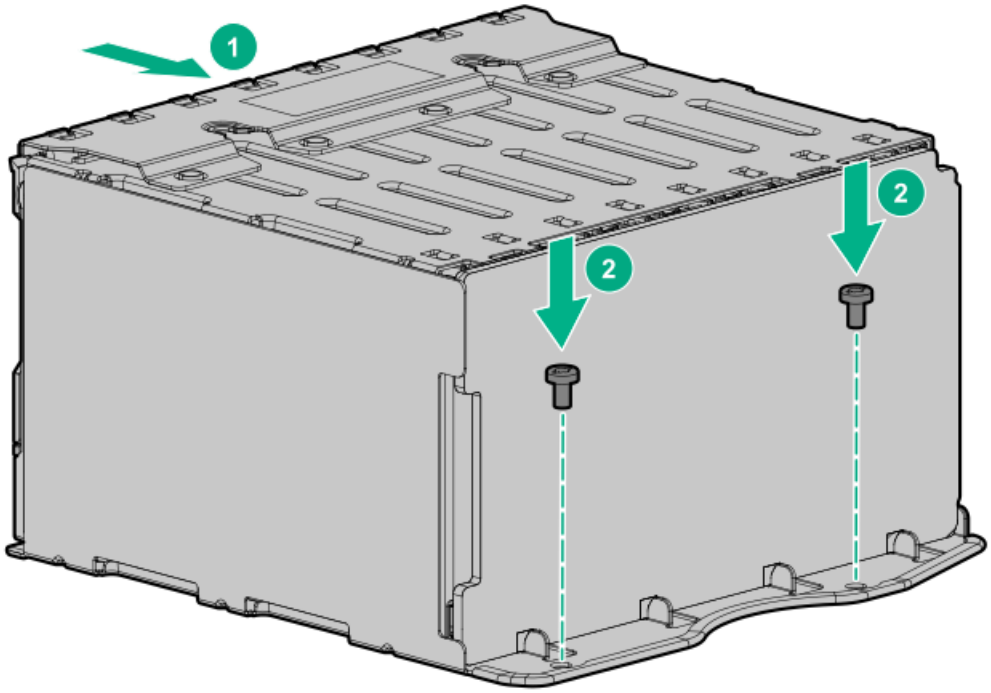

12. Cable the drive backplane.
13. Install drives.
14. Install the fan cage.
15. Install the air baffle.
16. Install the access panel.
17. Install the server into the rack.
18. Connect each power cord to the server.
19. Connect each power cord to the power source.
20. Power up the server.

Installing the rear 2 SFF drive backplane option

Prerequisites

Before you perform this procedure, make sure that you have the following items available:

- T-10 Torx screwdriver
- T-15 Torx screwdriver

Procedure

1. Observe the following alerts.

WARNING

To reduce the risk of personal injury from hot surfaces, allow the drives and the internal system components to cool before touching them.

CAUTION

To prevent damage to electrical components, properly ground the server before beginning any installation procedure. Improper grounding can cause ESD.

2. Power down the server.
3. Remove all power:
   a. Disconnect each power cord from the power source.
   b. Disconnect each power cord from the server.
4. Remove the server from the rack
5. Remove the access panel.
6. Remove the air baffle.
7. Remove the secondary riser cage.
8. Remove the rear drive cage blank.

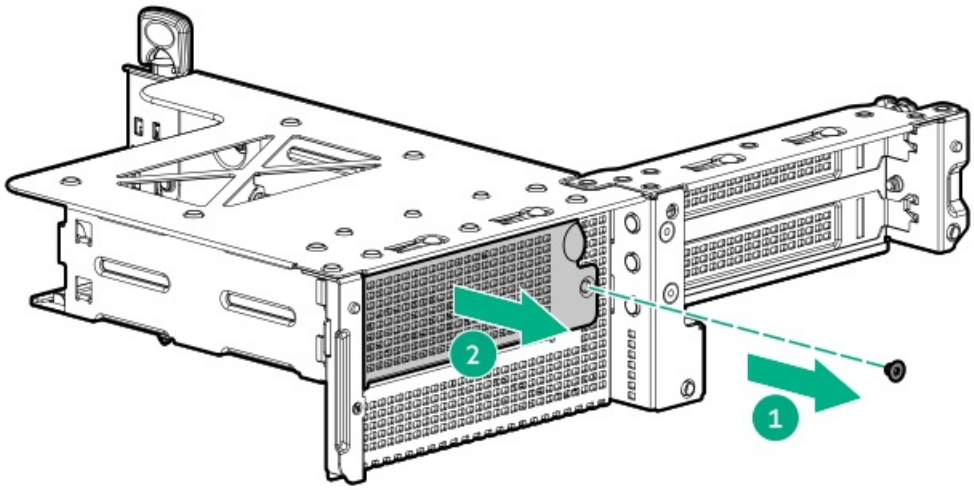

9. Install the rear drive backplane.

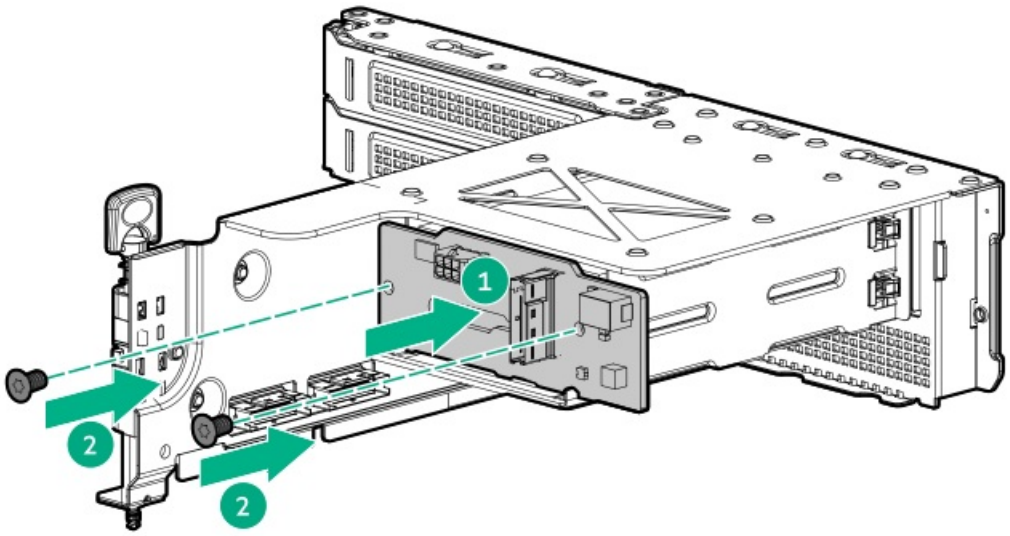

10. Install the secondary riser cage.
11. Cable the drive backplane.
12. Install drives.
13. Install the air baffle.
14. Install the access panel.
15. Install the server into the rack.
16. Connect each power cord to the server.
17. Connect each power cord to the power source.
18. Power up the server.

Installing the front 4 LFF drive backplane option

Prerequisites

Before you perform this procedure, make sure that you have a T-15 Torx screwdriver available.

Procedure

1. Observe the following alerts.

WARNING

To reduce the risk of personal injury from hot surfaces, allow the drives and the internal system components to cool before touching them.

CAUTION

To prevent damage to electrical components, properly ground the server before beginning any installation procedure. Improper grounding can cause ESD.

2. Power down the server.
3. If installed, release the cable management arm.
4. Remove all power:
   a. Disconnect each power cord from the power source.
   b. Disconnect each power cord from the server.
5. Do one of the following:
   - Extend the server from the rack.
   - Remove the server from the rack.
6. Remove the access panel.
7. Remove the air baffle.
8. Remove the fan cage.
9. Remove all drives and drive blanks.
10. Remove the blanks.

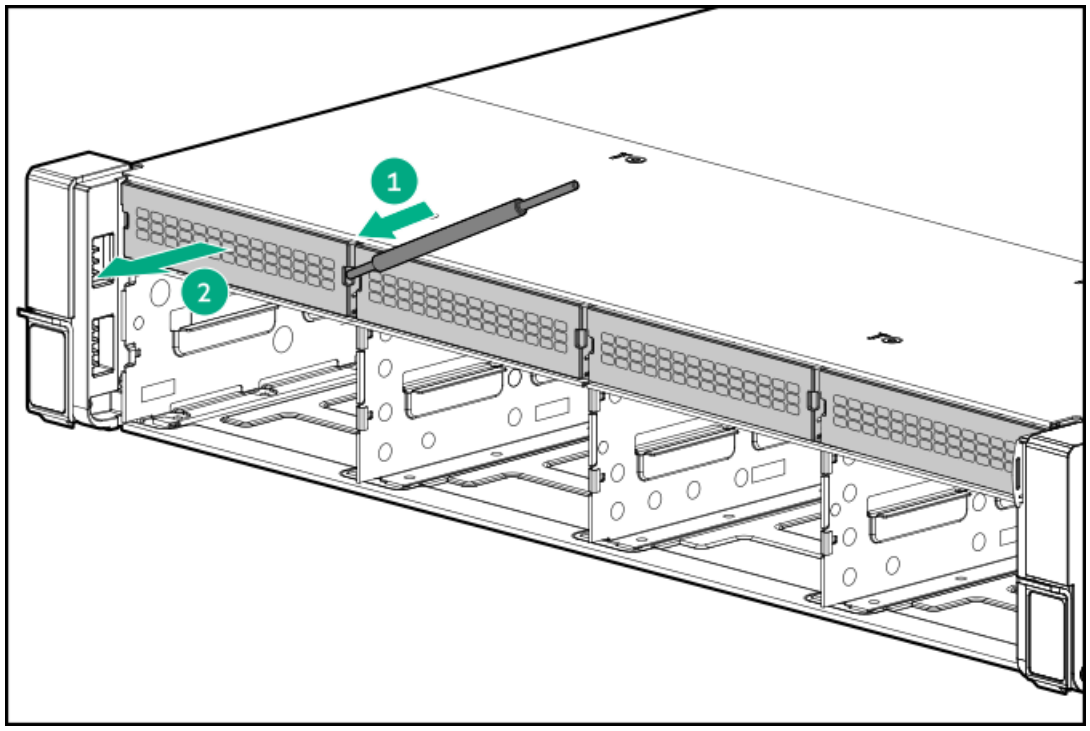

11. Disconnect the right ear cable from the system board to access the backplane assembly screw on the right side.

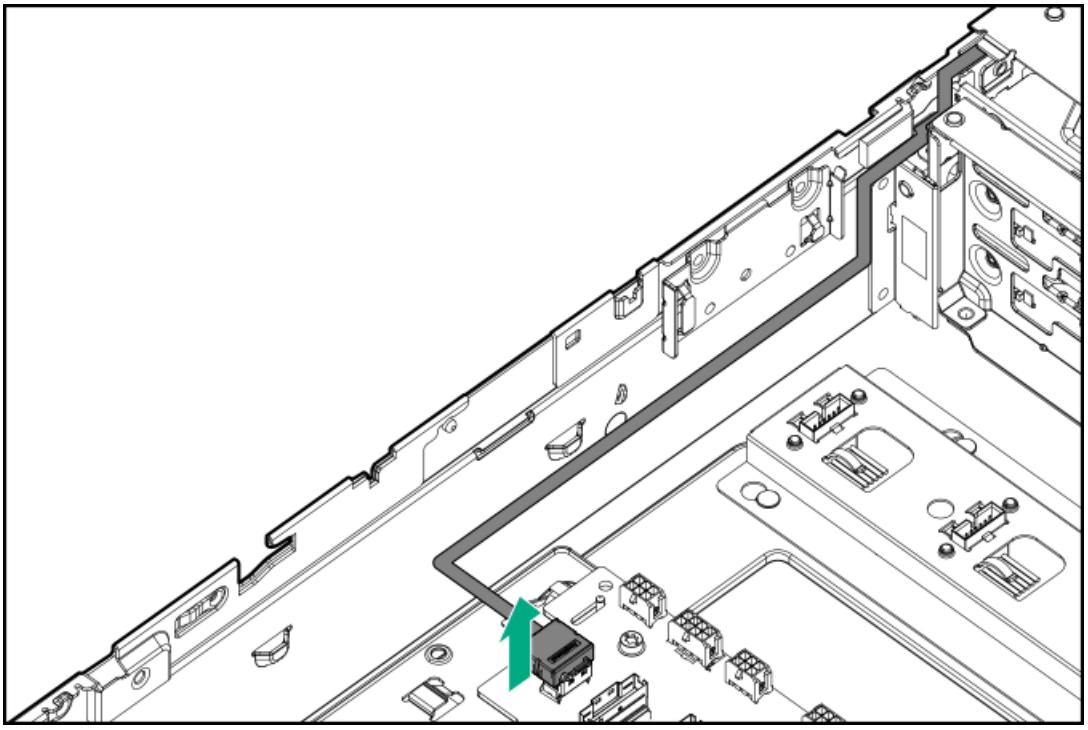

12. Disconnect all cables connected to the LFF drive backplane assembly.
13. Remove the LFF backplane assembly.

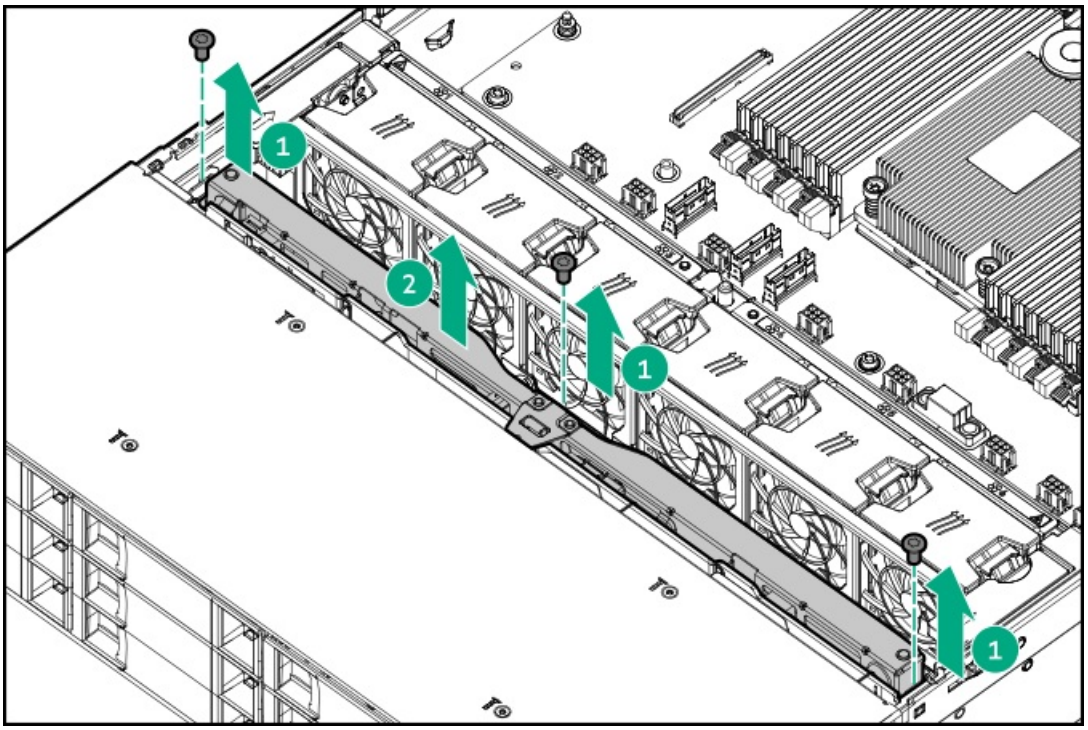

14. Install the LFF drive cage backplane.

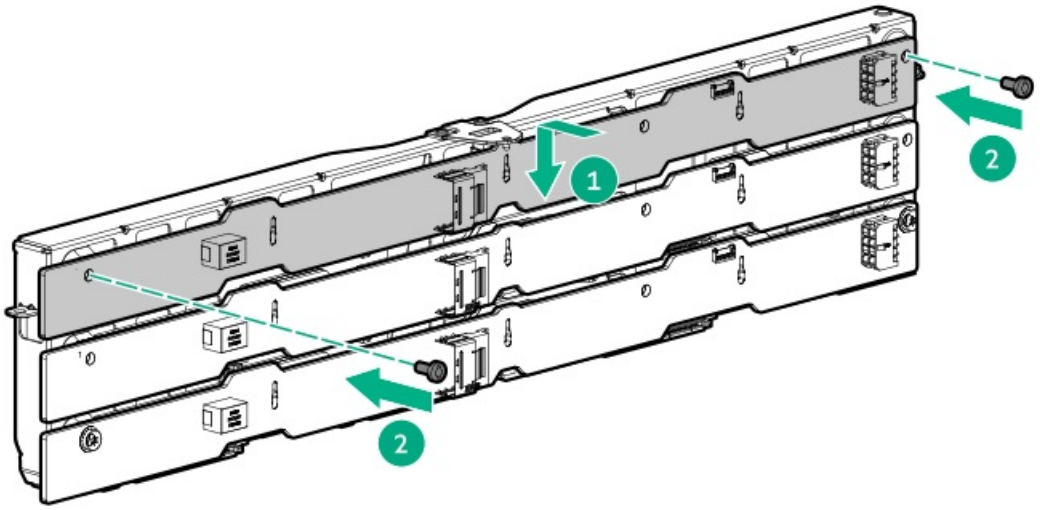

15. Reinstall the LFF drive backplane assembly.
16. Reconnect the right ear cable to the system board.
17. Cable the drive backplane.
18. Install drives.
19. Install the fan cage.
20. Install the air baffle.
21. Install the access panel.
22. Install the server into the rack.
23. Connect each power cord to the server.
24. Connect each power cord to the power source.
25. Power up the server.

Fan option

Fans are required in all bays. A fan failure or missing fan causes a loss of redundancy. A second fan failure or missing fan causes an orderly shutdown of the server.

The following hardware requires the high-performance fans:

- The following drive configurations:
  - 12 LFF SAS/SATA
  - 24 SFF SAS/SATA/NVMe
  - Rear 2 SFF SAS/SATA/NVMe
  - NVMe drives
- PCIe accelerator, graphics card
- Processor with a thermal design power (TDP) value of 280 W
- InfiniBand adapter

- Mellanox Ethernet adapter with 100Gb or faster speed

The server supports variable fan speeds. The fans operate at minimum speed until a temperature change requires a fan speed increase to cool the server. The server shuts down during the following temperature-related scenarios:

- At POST and in the OS, iLO 5 performs an orderly shutdown if a cautionary temperature level is detected. If the server hardware detects a critical temperature level before an orderly shutdown occurs, the server performs an immediate shutdown.
- When the Thermal Shutdown feature is disabled in the BIOS/Platform Configuration (RBSU), iLO 5 does not perform an orderly shutdown when a cautionary temperature level is detected. Disabling this feature does not disable the server hardware from performing an immediate shutdown when a critical temperature level is detected.

CAUTION

A thermal event can damage server components when the Thermal Shutdown feature is disabled in the BIOS/Platform Configuration (RBSU).

Subtopics

Installing high-performance fans

Installing high-performance fans

About this task

CAUTION

To prevent damage to the server, ensure that all DIMM latches are closed and locked before installing the fans.

CAUTION

Do not operate the server for long periods with the access panel open or removed. Operating the server in this manner results in improper airflow and improper cooling that can lead to thermal damage.

Procedure

1. Power down the server.
2. If installed, release the cable management arm.
3. Remove all power:
   a. Disconnect each power cord from the power source.
   b. Disconnect each power cord from the server.
4. Do one of the following:
   - Extend the server from the rack.
   - Remove the server from the rack.
5. Remove the access panel.
6. Remove all standard fans.

IMPORTANT

Do not mix standard fans and high-performance fans in the same server.

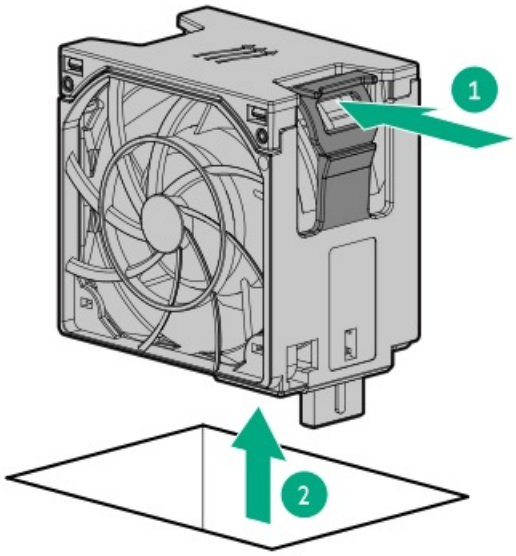

7. Install high-performance fans in all fan bays.

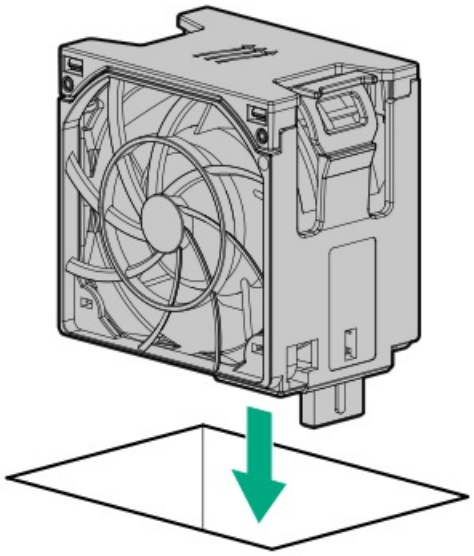

8. Install the access panel.
9. Install the server into the rack.
10. Connect each power cord to the server.
11. Connect each power cord to the power source.
12. Power up the server.

Memory options

IMPORTANT

This server does not support mixing LRDIMMs and RDIMMs. Attempting to mix any combination of these DIMMs can cause the server to halt during BIOS initialization. All memory installed in the server must be of the same type.

Subtopics

DIMM-processor compatibility
DIMM population information
HPE SmartMemory speed information
Installing a DIMM

DIMM-processor compatibility

The installed processor determines the type of DIMM that is supported in the server:

AMD EPYC processors support DDR4-3200 DIMMS.

Mixing DIMM types is not supported. Install only the supported DDR4-3200 DIMMs in the server.

DIMM population information

For specific DIMM population information, see the DIMM population guidelines on the Hewlett Packard Enterprise website (https://www.hpe.com/docs/amd-population-rules-Gen10Plus).

HPE SmartMemory speed information

For more information about memory speed information in HPE servers using AMD processors, see the Hewlett Packard Enterprise website (https://www.hpe.com/docs/amd-speed-table-Gen10Plus).

Installing a DIMM

Procedure

1. Power down the server.
2. If installed, release the cable management arm.
3. Remove all power:
   a. Disconnect each power cord from the power source.
   b. Disconnect each power cord from the server.
4. Do one of the following:
   - Extend the server from the rack.
   - Remove the server from the rack.

5. Remove the access panel.
6. Remove the air baffle.
7. Install the DIMM:
   a. Open the DIMM slot latches.
   b. Align the notch on the bottom edge of the DIMM with the keyed surface of the DIMM slot, and then fully press the DIMM into the slot until the latches snap back into place.

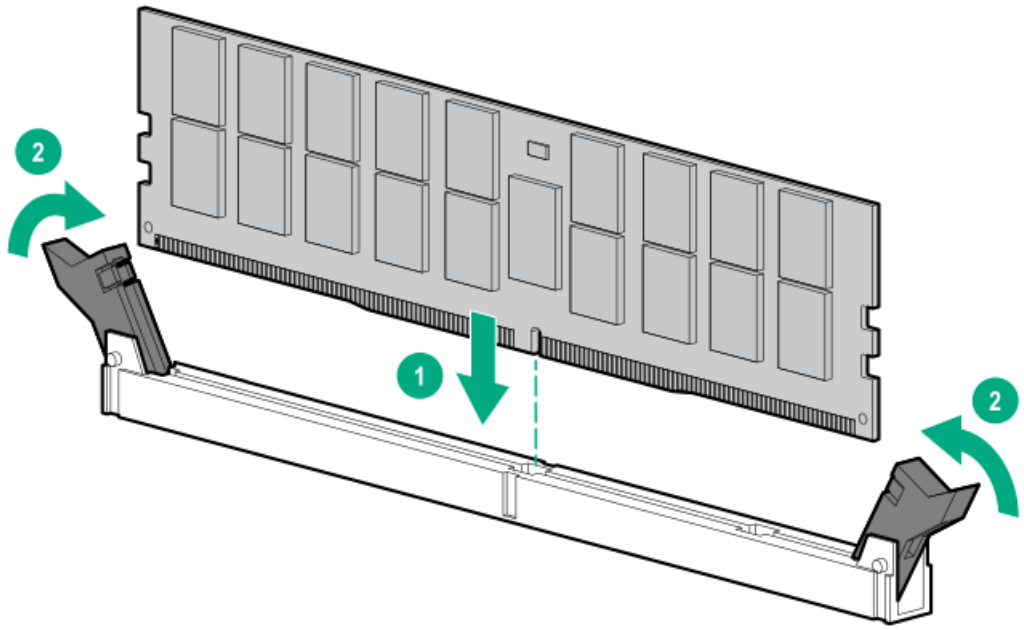

   The DIMM slots are structured to ensure proper installation. If you try to insert a DIMM but it does not fit easily into the slot, you might have positioned it incorrectly. Reverse the orientation of the DIMM and insert it again.
8. Install the air baffle.
9. Install the access panel.
10. Install the server into the rack.
11. Connect each power cord to the server.
12. Connect each power cord to the power source.
13. Power up the server.

Results

Use the BIOS/Platform Configuration (RBSU) in the UEFI System Utilities to configure the memory mode.

Storage controller options

About this task

This server supports the following storage controllers:

- Embedded HPE SR100i Gen10 Plus Software RAID controller:
  - Supports direct attached SATA and NVMe drives. Software RAID is supported in specific drive bays.

- Supports SATA and NVMe software RAID. For more information on software RAID configuration, see the HPE SR Gen10 Plus Software RAID User Guide at **https://www.hpe.com/support/SSC-SRGen10Plus-ug**.

- Type-a modular (AROC) and type-p PCIe plug-in Gen10 and Gen10 Plus storage controller options:
  - Supports NVMe, SAS, and SATA drives.
  - Supports hardware RAID.
  - When a Gen10 Plus tri-mode controller is used together with a U.3 drive backplane, the system will support mixed drive configuration.

Subtopics

Installing a storage controller

Installing a storage controller

Prerequisites

Before you perform this procedure, make sure that you have a T-15 Torx screwdriver available.

About this task

IMPORTANT
Tri-mode storage controllers are not supported in a server using an AMD EPYC 7002 processor.

Procedure

1. Power down the server.
2. If installed, release the cable management arm.
3. Remove all power:
   a. Disconnect each power cord from the power source.
   b. Disconnect each power cord from the server.
4. Do one of the following:
   - Extend the server from the rack.
   - Remove the server from the rack.
5. Remove the access panel.
6. Remove the air baffle.
7. Remove the fan cage.
8. Do one of the following:
   - For type-a modular controller, install the controller into the type-a connector.

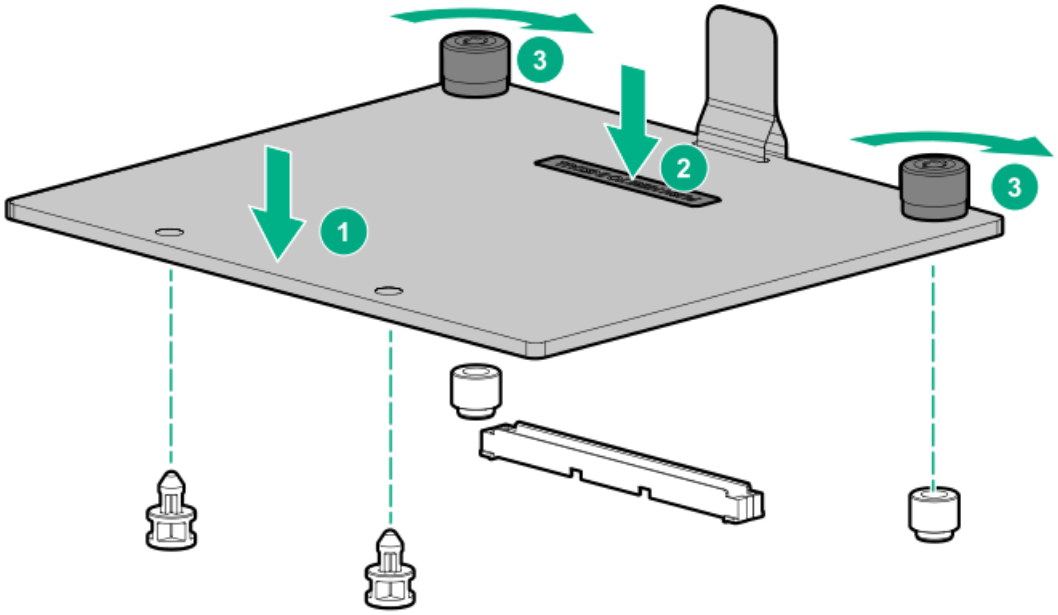

- For type-p PCIe plug-in controller, install the controller into an expansion slot .

9. Cable the controller.
10. Install the fan cage.
11. Install the air baffle.
12. Install the access panel.
13. Install the server into the rack.
14. Connect each power cord to the server.
15. Connect each power cord to the power source.
16. Power up the server.

Energy pack options

Hewlett Packard Enterprise offers two centralized backup power source options to back up write cache content on the controllers in case of an unplanned server power outage.

- HPE Smart Storage Battery
- HPE Smart Storage Hybrid Capacitor

> **IMPORTANT**
>
> The HPE Smart Storage Hybrid Capacitor is only supported on Gen10 and later servers.

One energy pack option can support multiple devices. An energy pack option is required for 900 series controllers. Once installed, the status of the energy pack displays in HPE iLO. For more information, see the HPE iLO user guide on the **Hewlett Packard Enterprise website**.

Subtopics

HPE Smart Storage Battery
HPE Smart Storage Hybrid Capacitor
Installing an energy pack

HPE Smart Storage Battery

The HPE Smart Storage Battery supports the following devices:

- HPE Smart Array SR controllers
- HPE Smart Array MR controllers

A single 96W battery can support up to 24 devices.

After the battery is installed, it might take up to two hours to charge. Controller features requiring backup power are not re-enabled until the battery is capable of supporting the backup power.

This server supports the 96W HPE Smart Storage Battery with the 145mm cable.

HPE Smart Storage Hybrid Capacitor

The HPE Smart Storage Hybrid Capacitor supports the following devices:

- HPE SmartRAID SR controllers
- HPE MegaRAID MR controllers

The capacitor pack can support up to two devices.

This server supports the HPE Smart Storage Hybrid Capacitor with the 145mm cable.

Before installing the HPE Smart Storage Hybrid Capacitor, verify that the system BIOS meets the minimum firmware requirements to support the capacitor pack.

> **IMPORTANT**
> If the system BIOS or controller firmware is older than the minimum recommended firmware versions, the capacitor pack will only support one device.

The capacitor pack is fully charged after the system boots.

Installing an energy pack

Prerequisites

Before proceeding the installation, observe following guidelines:

- Make sure that you have the storage controller backup power cable (ships with the storage controller).
- Make sure that a compatible type-p storage controller is installed.

Procedure

1. Power down the server.
2. If installed, release the cable management arm.
3. Remove all power:
   a. Disconnect each power cord from the power source.
   b. Disconnect each power cord from the server.

4. Do one of the following:
   - Extend the server from the rack.
   - Remove the server from the rack.
5. Remove the access panel.
6. Remove the air baffle.
7. Remove the fan cage.
8. Install the energy pack.

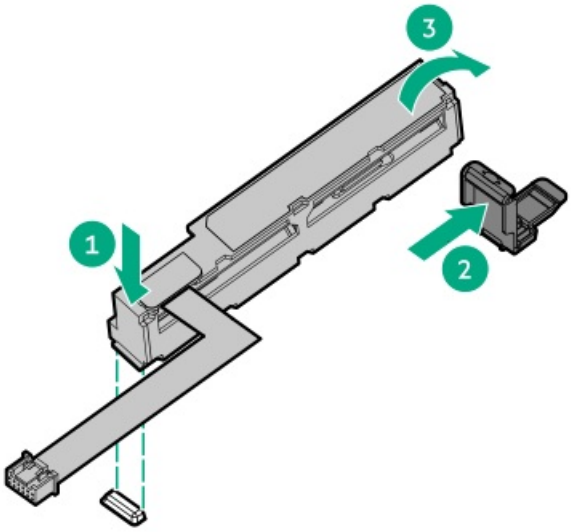

9. Connect the energy pack extension cable.

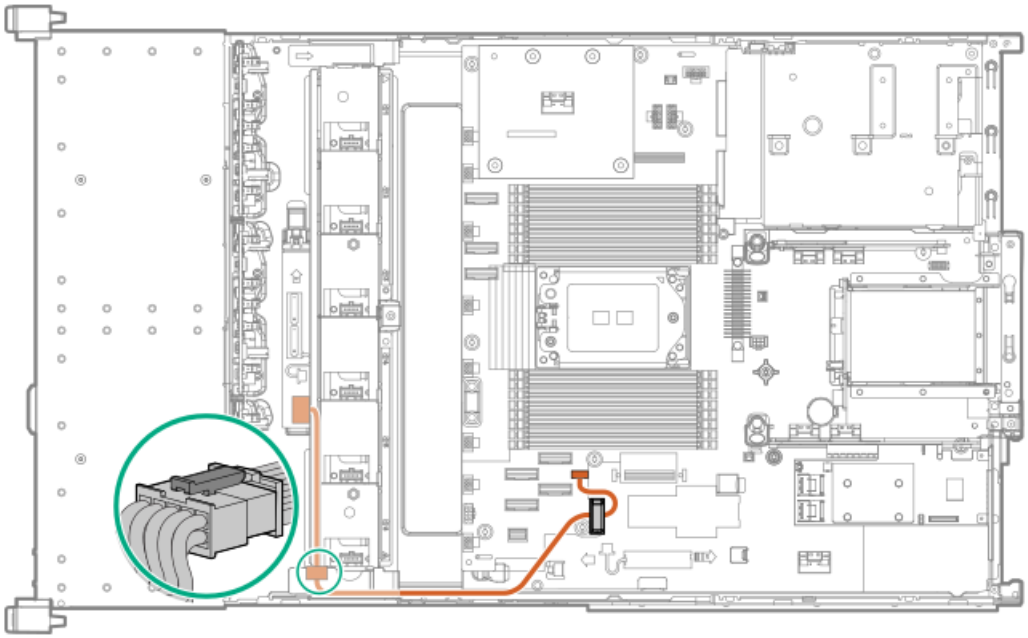

10. Connect the storage controller backup power cable .
11. Install the fan cage.

12. Install the air baffle.
13. Install the access panel.
14. Install the server into the rack.
15. Connect each power cord to the server.
16. Connect each power cord to the power source.
17. Power up the server.

Riser and riser cage options

Subtopics

Installing primary risers
Installing secondary risers

Installing primary risers

Prerequisites

Before you perform this procedure, make sure that you have a T-15 Torx screwdriver available.

Procedure

1. Power down the server.
2. If installed, release the cable management arm.
3. Remove all power:
   a. Disconnect each power cord from the power source.
   b. Disconnect each power cord from the server.
4. Do one of the following:
   - Extend the server from the rack.
   - Remove the server from the rack.
5. Remove the access panel.
6. Remove the riser cage.
7. Remove the riser board.

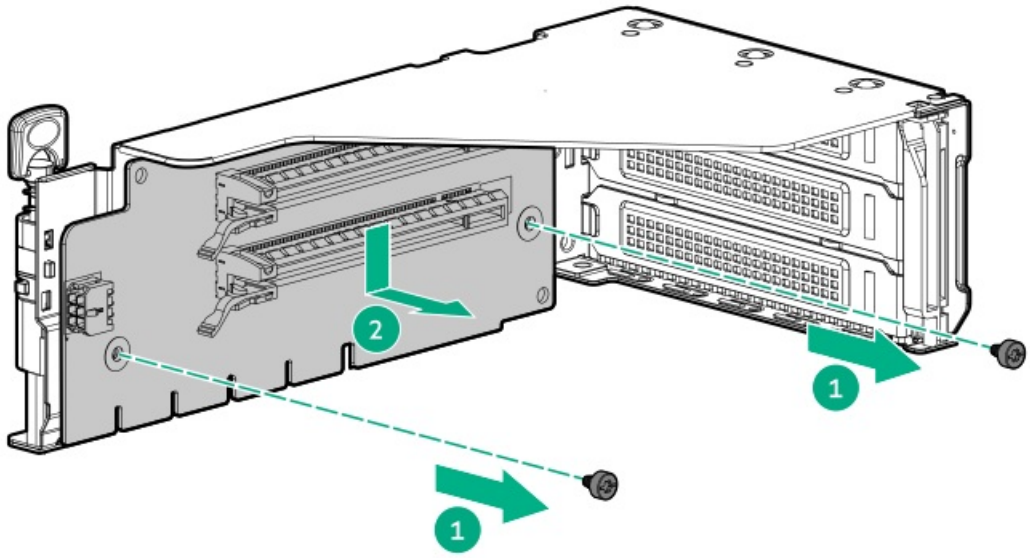

8. Install the riser.

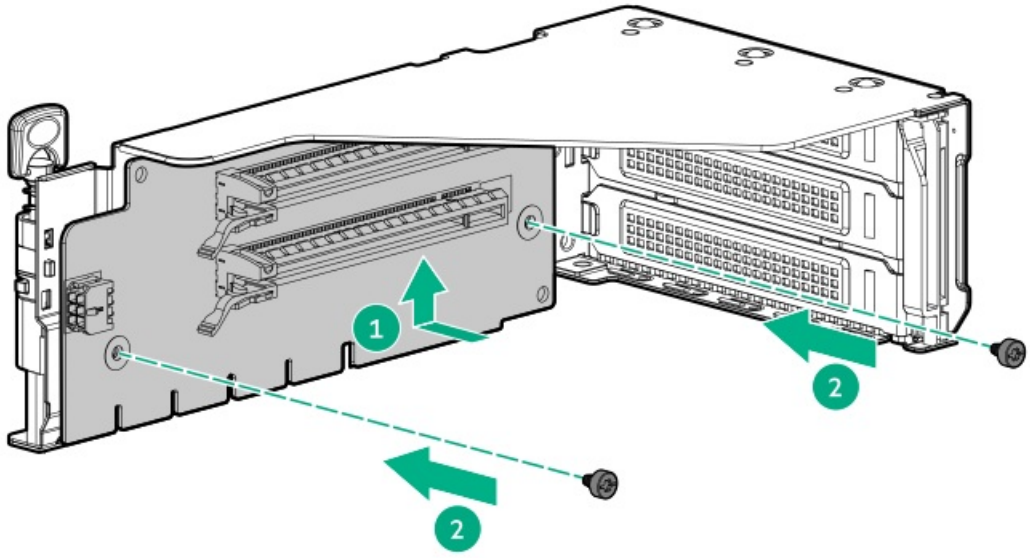

9. Install any expansion boards, if needed .
10. Connect data cables to the riser or expansion board, if needed.
11. Install the riser cage.
12. Connect data cables to drive backplanes, if needed.
13. Install the access panel .
14. Install the server into the rack.
15. Connect each power cord to the server.
16. Connect each power cord to the power source.
17. Power up the server .

Installing secondary risers

Prerequisites

Before you perform this procedure, make sure that you have a T-15 Torx screwdriver available.

Procedure

1. Power down the server.
2. If installed, release the cable management arm.
3. Remove all power:
   a. Disconnect each power cord from the power source.
   b. Disconnect each power cord from the server.
4. Do one of the following:
   - Extend the server from the rack.
   - Remove the server from the rack.
5. Remove the access panel.
6. Remove the riser cage.
7. Remove the riser board.

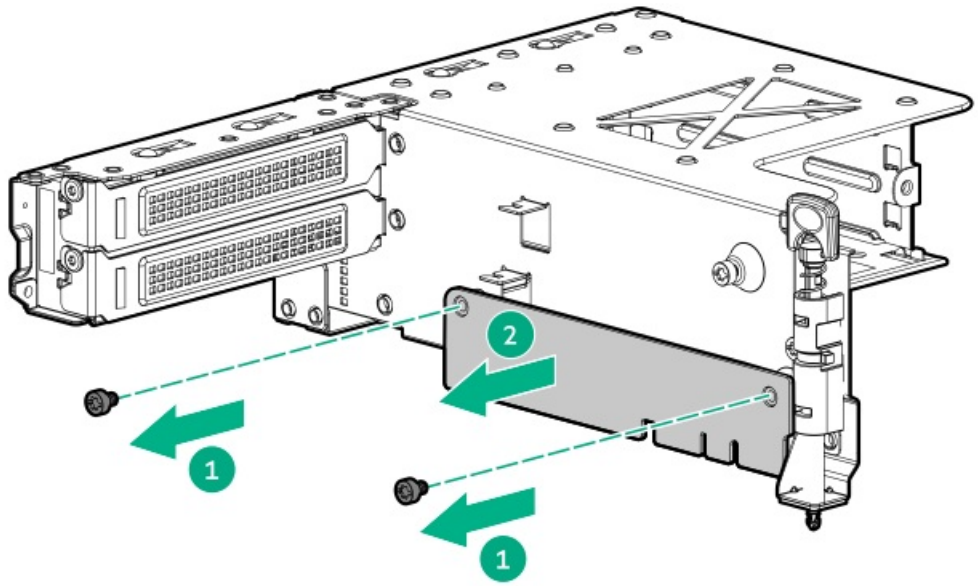

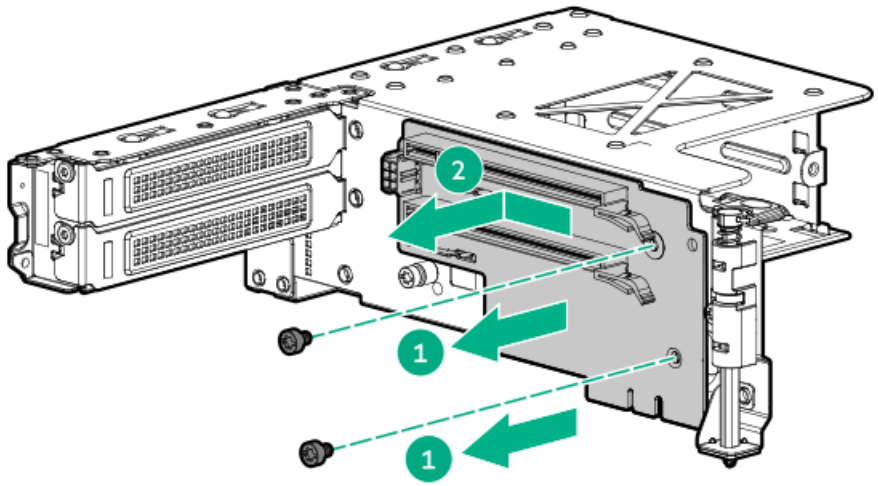

8. Install the riser.

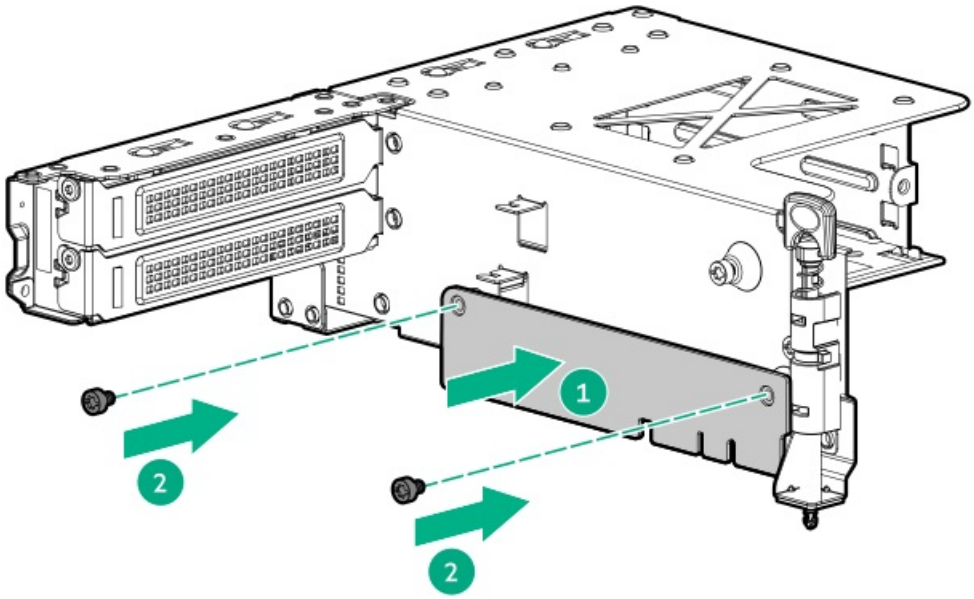

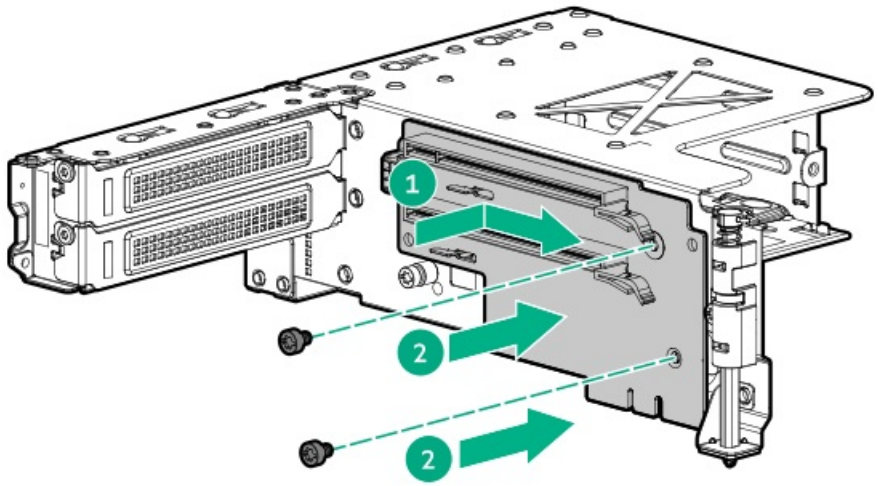

9. Install any expansion boards, if needed .

10. Connect data cables to the riser or expansion board, if needed.
11. Install the riser cage.
12. Connect data cables to drive backplanes, if needed.
13. Install the access panel.
14. Install the server into the rack.
15. Connect each power cord to the server.
16. Connect each power cord to the power source.
17. Power up the server.

Expansion slots

Subtopics

Supported PCIe form factors
Installing expansion boards
Installing a 12G SAS Expander Card
Accelerator options
Installing an accelerator or GPU

Supported PCIe form factors

All slots support full-height expansion cards. Use the following information to find supported lengths for each slot.

Slot description example

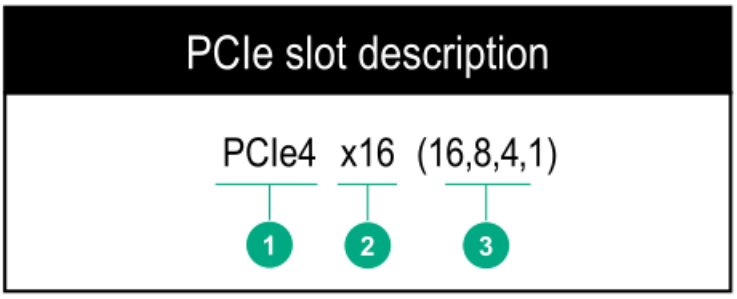

Item	Description
1	Gen4 signaling rate
2	Physical connector link width
3	Negotiable link width(s)

Primary riser connector

PCIe slot and card length	2-slot riser (Optional)
Slot 1 - Full-length/Full-height (FL/FH)	PCIe4 x16 (16, 8, 4, 1)
Slot 2 - Full-length/Full-height (FL/FH)	PCIe4 x16 (16, 8, 4, 1)

Secondary riser connector

PCIe slot and card length	2-slot riser (Optional)
Slot 3 - Full-length/Full-height (FL/FH)	PCIe4 x8 (8, 4, 1) or PCIe4 x16 (16, 8, 4, 1)
Slot 4 - Full-length/Full-height (FL/FH)	PCIe4 x8 (8, 4, 1)

Installing expansion boards

Prerequisites

Before you perform this procedure, make sure that you have a T-10 Torx screwdriver available.

About this task

WARNING

To reduce the risk of personal injury, electric shock, or damage to the equipment, remove the power cord to remove power from the server. The front panel Power On/Standby button does not completely shut off system power. Portions of the power supply and some internal circuitry remain active until AC power is removed.

CAUTION

To prevent improper cooling and thermal damage, do not operate the server unless all PCI slots have either an expansion slot cover or an expansion board installed.

To install the component:

Procedure

1. Power down the server.
2. If installed, release the cable management arm.
3. Remove all power:
   a. Disconnect each power cord from the power source.
   b. Disconnect each power cord from the server.
4. Do one of the following:
   - Extend the server from the rack.
   - Remove the server from the rack.
5. Remove the access panel.
6. Remove the riser cage.
7. Identify and then remove the slot blank from the riser cage.
8. Install the expansion board.

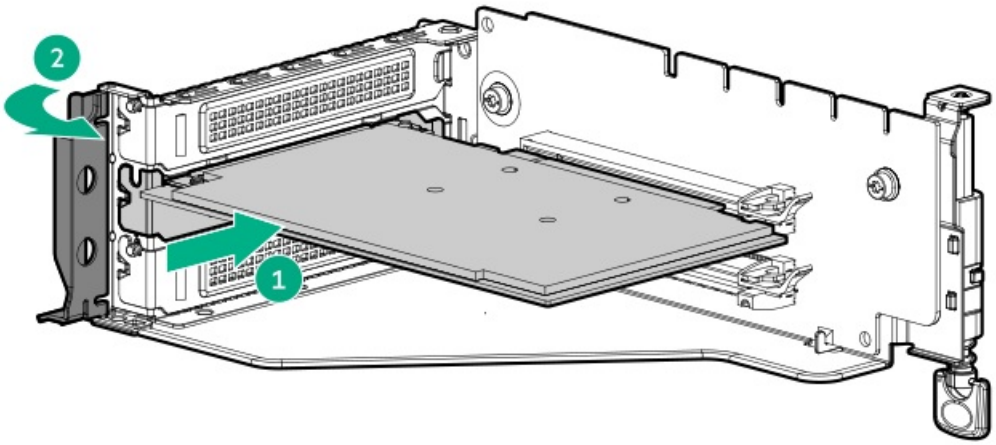

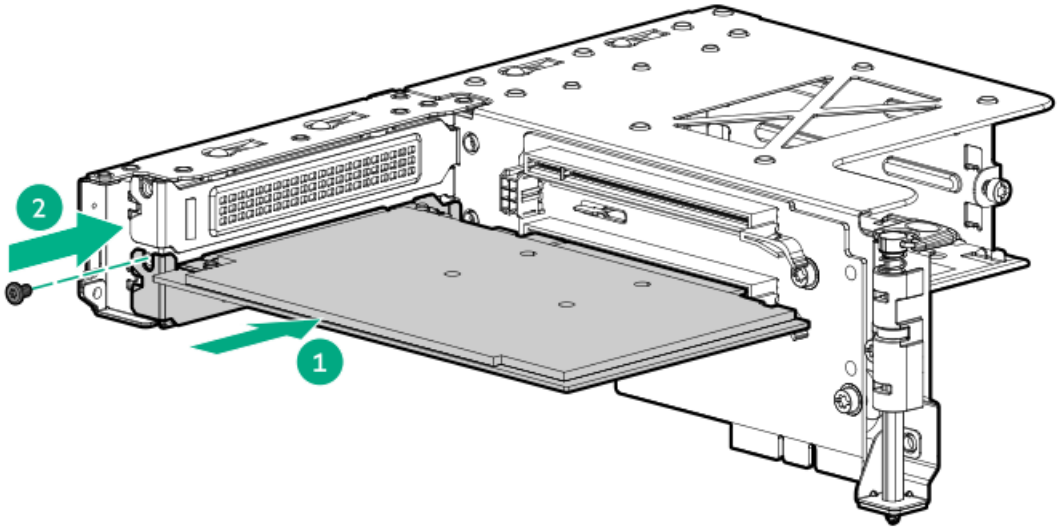

9. If internal cables are required for the expansion board, connect the cables.
10. Install the riser cage.
11. Install the access panel.
12. Slide the server into the rack.
13. Connect each power cord to the server.
14. Connect each power cord to the power source.
15. Power up the server.

Installing a 12G SAS Expander Card

Prerequisites

Before you perform this procedure, make sure that you have the following items available:

- Storage cables for each drive box
- A storage controller

Be sure that you have the latest firmware for the controllers and the expander card. To download the latest firmware, see the **Hewlett**

Packard Enterprise website.

About this task

The SAS expander option is only supported in the 24 SFF drive configuration.

Install the SAS expander card into slot 2 of the primary PCIe riser.

To ensure that cables are connected correctly, observe the labels on the cable and port.

Procedure

1. Power down the server.
2. If installed, release the cable management arm.
3. Remove all power:
   a. Disconnect each power cord from the power source.
   b. Disconnect each power cord from the server.
4. Do one of the following:
   - Extend the server from the rack.
   - Remove the server from the rack.
5. Remove the access panel.
6. Remove the fan cage.
7. Remove the air baffle.
8. Remove the primary riser cage.
9. Locate slot 2, and then remove the riser slot blank.
10. Install the 12G SAS expander card.

    IMPORTANT

    The 12G SAS expander card requires a type-a controller.

11. Using the labels on each cable, connect the cables to the SAS expander.
12. Install the primary riser cage.
13. Connect the 12G SAS expander cables.
14. Install the fan cage.
15. Install the air baffle.
16. Install the access panel.
17. Install the server into the rack.
18. Connect each power cord to the server.
19. Connect each power cord to the power source.
20. Power up the server.

Accelerator options

This server supports various accelerator options to meet your computational and graphics workload requirements. For a list of supported accelerator models, see the server QuickSpecs on the Hewlett Packard Enterprise website (**https://www.hpe.com/info/qs**).

- PCIe workload accelerators – These options are PCIe card-based, direct-attach solutions that use solid-state storage technology directly on the PCI bus to boost I/O performance and reduce latency to scale in line with your processing requirements.
- Computational and graphics accelerators – These options deliver accelerated compute performance for a range of deep learning, high-performance computing (HPC), and graphics-intensive applications.

Installing an accelerator or GPU

Prerequisites

Before you install this option, make sure that you have the following items available:

- The components included with the hardware option kit
- T-10 Torx screwdriver
- High-performance fans

The accelerator/GPU can be installed into the primary or secondary risers. This procedure shows an installation in the primary position. However, the same procedure can be used to install in the secondary riser.

Procedure

1. Power down the server.
2. Remove all power:
   a. Disconnect each power cord from the power source.
   b. Disconnect each power cord from the server.
3. Do one of the following:
   - Extend the server from the rack.
   - Remove the server from the rack.
4. Remove the access panel.
5. Remove the air baffle.
6. If you are installing a full-length accelerator, install the corresponding retention clip:

   Install the clip that supports your configuration. Primary and secondary positions are shown.

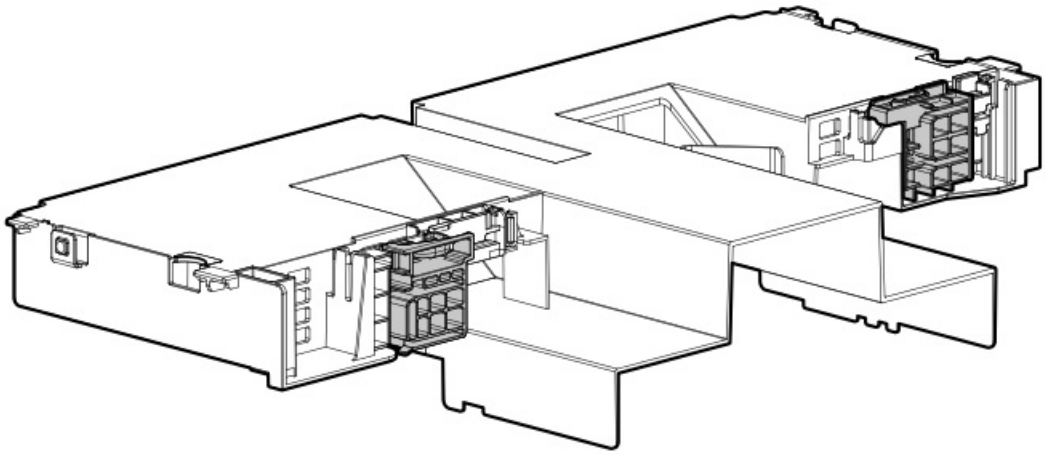

7. Install the high-performance fans to maintain proper system cooling.
8. Remove the riser cage.
9. Remove the riser slot blank.
10. Install the accelerator into the riser.

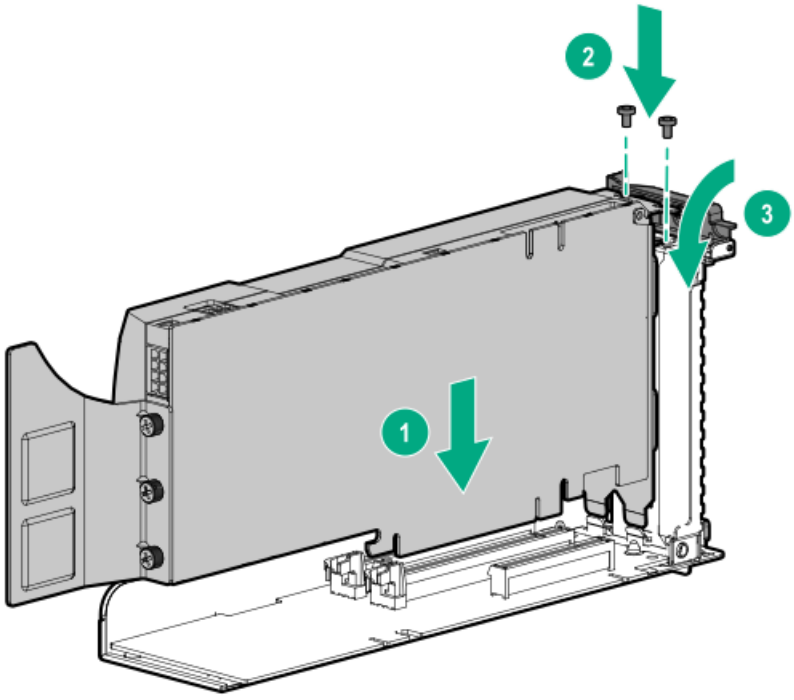

11. Connect the power cables to the systemboard. The cable illustrated in blue is a Y-cable to support 2 accelerators in primary riser

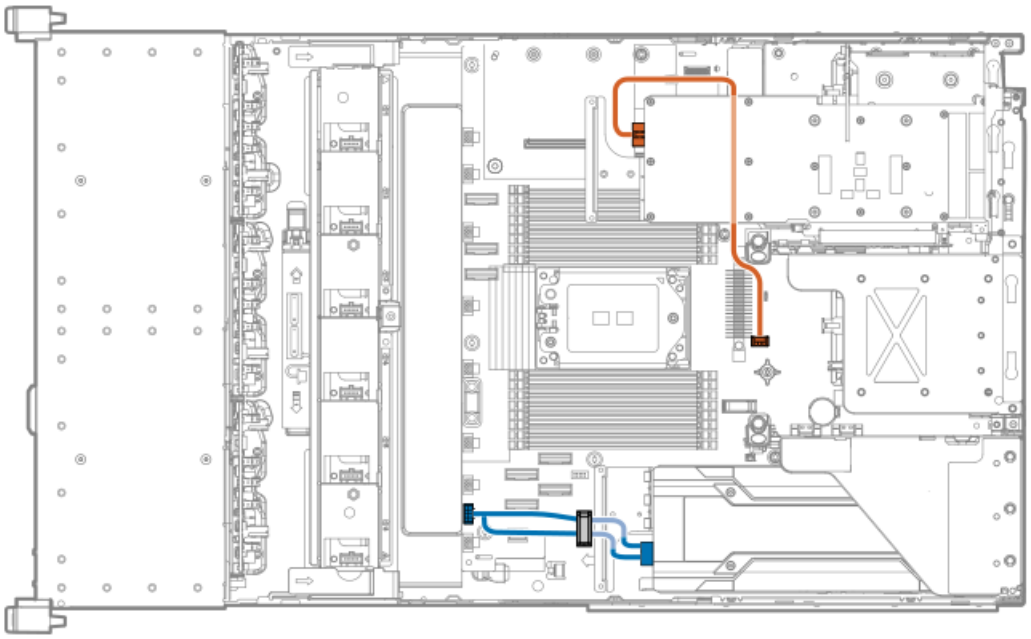

12. Install the air baffle.
13. If you are installing a full-length accelerator, slide the retention clip to the unlocked position.

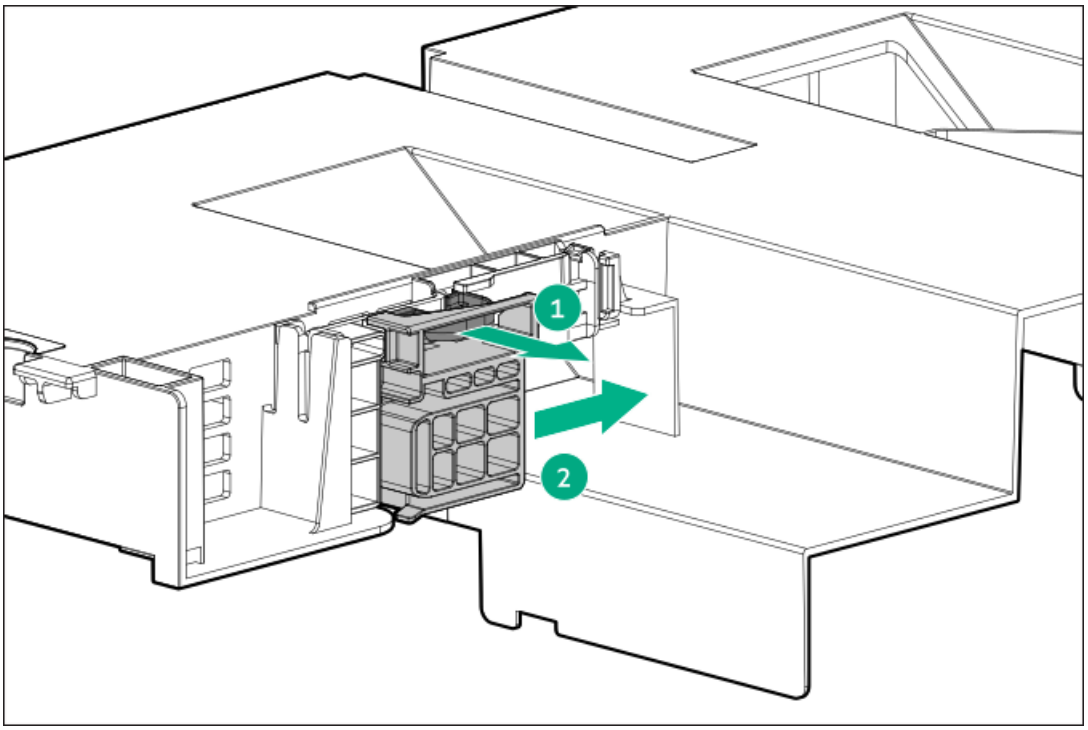

14. Install the riser cage.
15. Connect the power cable to the accelerator. The cable illustrated in blue is a Y-cable to support 2 accelerators in primary riser

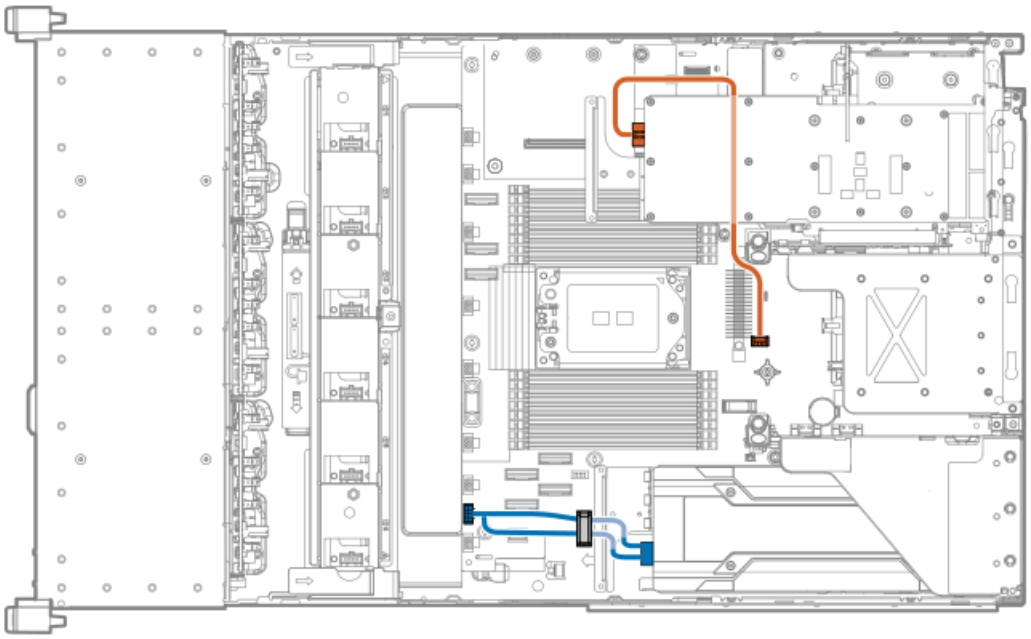

16. After installing a full-lenght accelerator, slide the retention clip to the locked position.

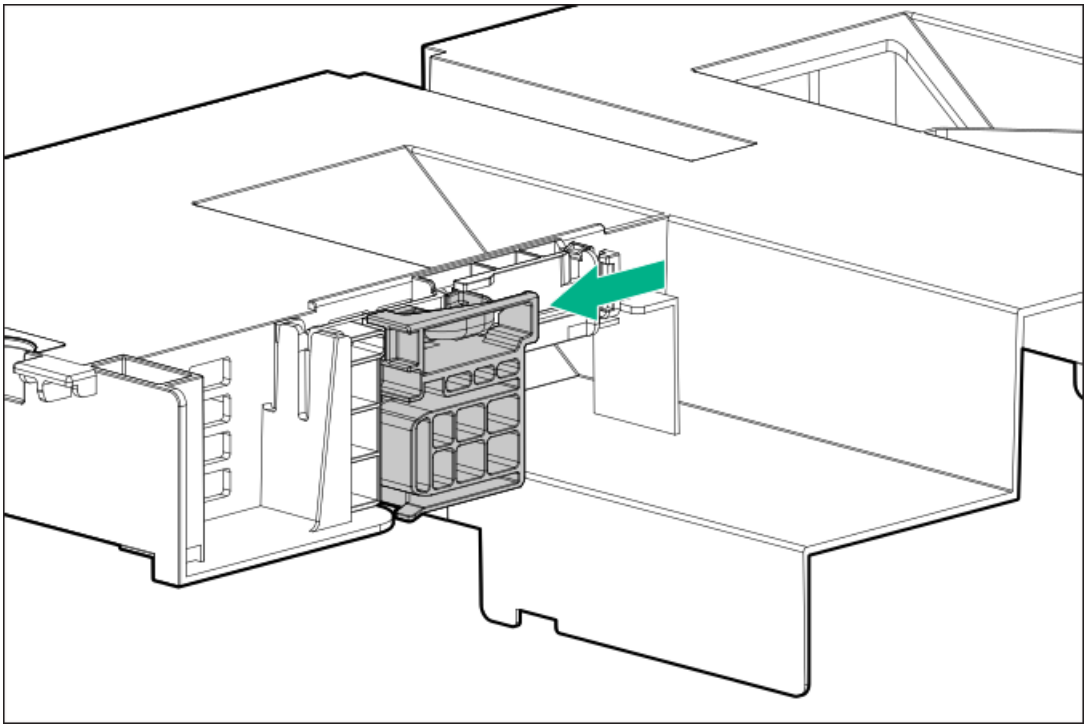

Results

The installation is complete.

M.2 SSD options

The server supports the installation of M.2 SATA and NVMe SSD options for:

- Booting up from flash solution

- Data backup/redundancy

Subtopics

Installing the M.2 SATA SSD enablement option
Installing the HPE NS204i-p NVMe OS Boot Device option

Installing the M.2 SATA SSD enablement option

Prerequisites

- To use the embedded HPE SR100i Gen10 Plus Software RAID controller to manage the M.2 SATA SSDs, set the server boot mode to UEFI.
- Before you perform this procedure, make sure that you have the following items available:
  - T-15 Torx screwdriver
  - Phillips No. 1 screwdriver

About this task

The M.2 SATA SSD enablement option includes a PCIe3 x8 add-in card (AIC) that supports two M.2 2280 SATA SSDs. This AIC is only compatible with Windows operating systems.

CAUTION

A discharge of static electricity from a finger or other conductor might damage system boards or other static-sensitive devices. To prevent damage, observe antistatic precautions.

Procedure

Installing the drives onto the M.2 SATA add-in card

1. Insert the SSD into the M.2 slot at a 45° angle.
2. Carefully press the SSD down to the horizontal position.
3. Install the SSD mounting screw.

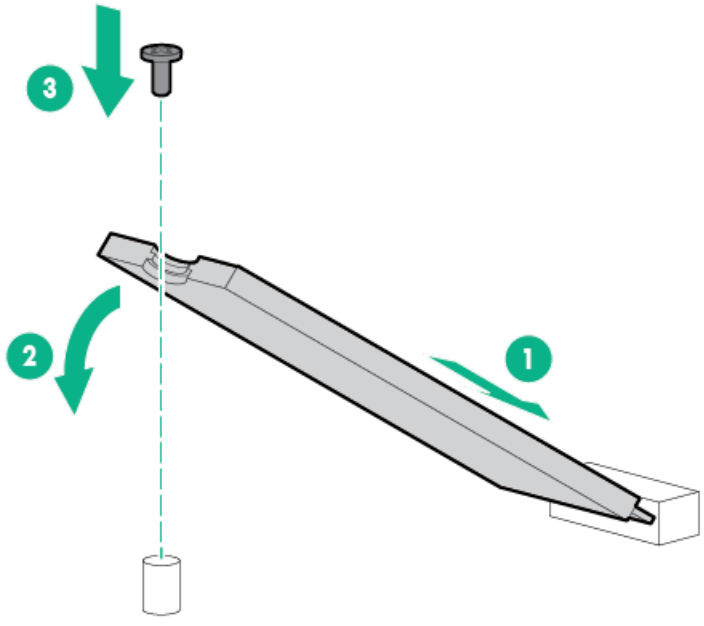

4. If you are installing a second SSD, repeat steps 1–3.

Installing the M.2 SATA SSD add-in card

5. Power down the server.
6. If installed, release the cable management arm.
7. Remove all power:
   a. Disconnect each power cord from the power source.
   b. Disconnect each power cord from the server.
8. Do one of the following:
   - Extend the server from the rack.
   - Remove the server from the rack.
9. Remove the access panel.
10. Remove the air baffle.
11. Identify the riser slot compatible with the add-in card.
12. To install the add-in card in the primary riser, do the following:
    a. Remove the primary riser cage.
    b. Remove the riser slot blank.
    c. Install the add-in card.
    d. Install the primary riser cage.
13. Install the air baffle.
14. Install the access panel.
15. Install the server into the rack.
16. Connect each power cord to the server.
17. Connect each power cord to the power source.
18. Power up the server.
19. To configure the M.2 SSDs, see the HPE SR Gen10 Plus Software RAID User Guide at **https://www.hpe.com/support/SSC-SRGen10Plus-ug**.

Installing the HPE NS204i-p NVMe OS Boot Device option

Prerequisites

Before beginning installation, ensure that the server is updated with the latest operating system firmware and drivers.

About this task

Procedure

Installing drives onto the boot device

1. Remove the liner from the thermal interface pad.

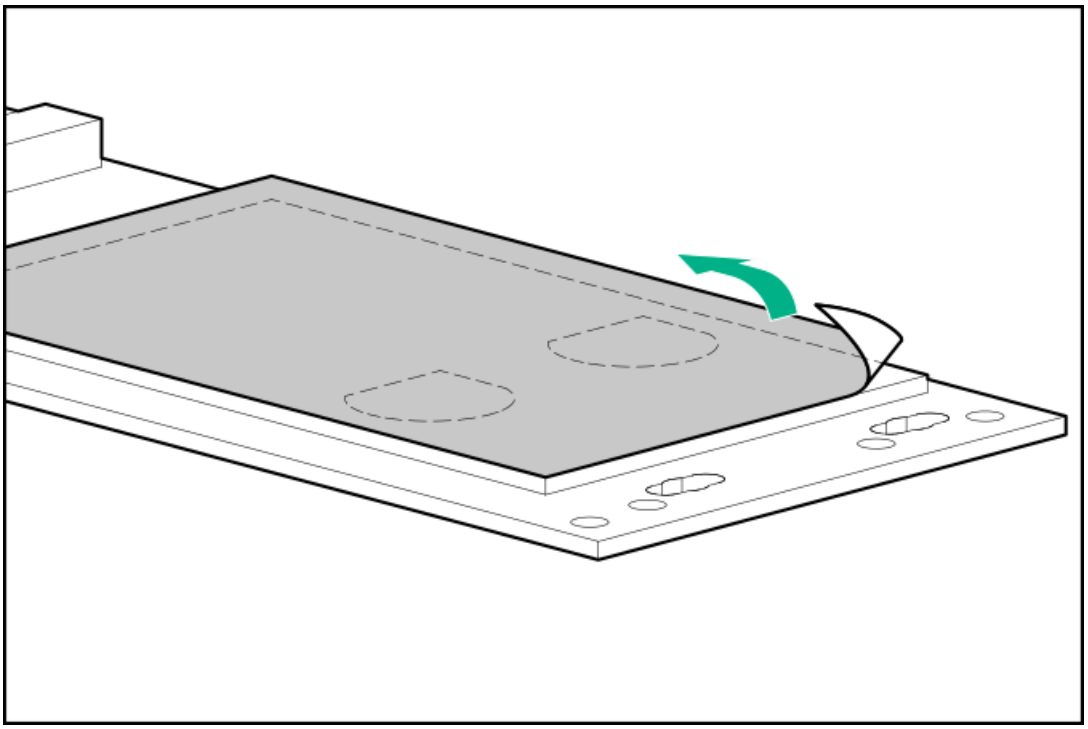

2. Install the drives.

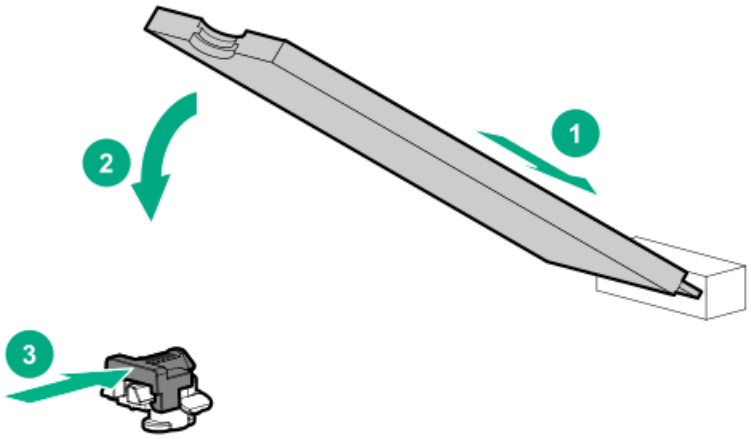

Installing the boot device

3. Power down the server.
4. If installed, release the cable management arm.
5. Remove all power:
   a. Disconnect each power cord from the power source.
   b. Disconnect each power cord from the server.
6. Do one of the following:
   - Extend the server from the rack.
   - Remove the server from the rack.
7. Remove the access panel.
8. Remove the air baffle.
9. Select an available PCIe expansion slot that is x8 physical size and x4 electrical .

10. Remove the riser cage
11. Remove the riser slot blank.
12. Install the boot device.
13. Install the riser cage.
14. Install the air baffle.
15. Install any components that were removed to access the expansion slot.
16. Install the access panel.
17. Install the server into the rack.
18. Connect each power cord to the server.
19. Connect each power cord to the power source.
20. Power up the server.

Deploying an operating system

21. Deploy a supported operating system to the boot device drive.

    For more information, see the product QuickSpecs (**https://www.hpe.com/info/qs**).

    After the OS installation completes, the system automatically copies the operating system to the second, mirrored drive on the boot device.

22. Proceed with normal system setup and operation.

Installing an OCP NIC 3.0 adapter

Prerequisites

Before you begin this procedure, make sure that you have a T-10 Torx screwdriver available.

Procedure

1. Power down the server.
2. If installed, release the cable management arm.
3. Remove all power:
   a. Disconnect each power cord from the power source.
   b. Disconnect each power cord from the server.
4. Do one of the following:
   - Extend the server from the rack.
   - Remove the server from the rack.
5. Remove the access panel.
6. Remove the primary riser cage.
7. Remove the OCP NIC 3.0 adapter blank.

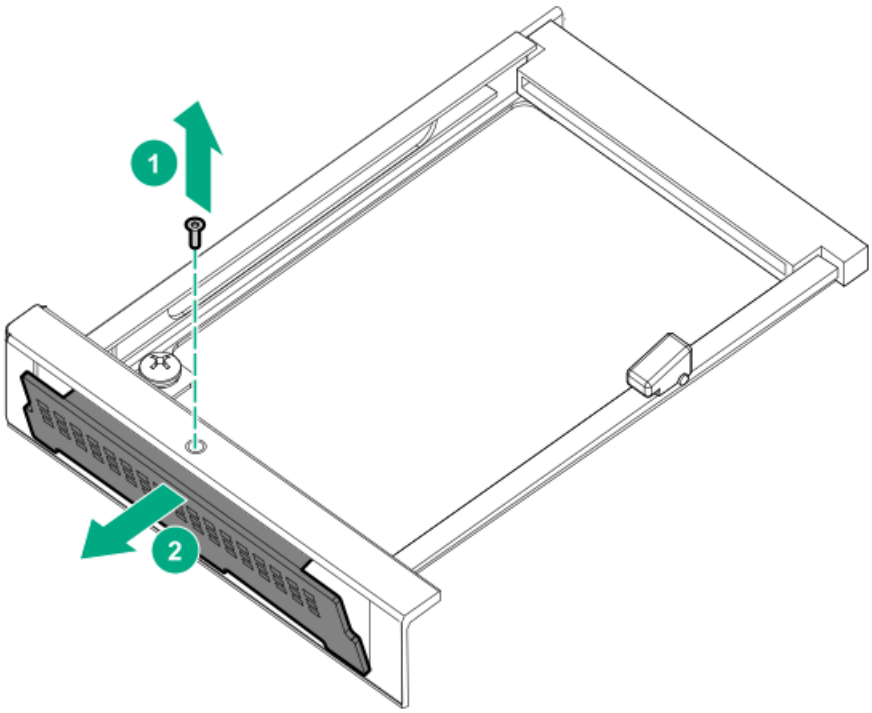

8. Install the OCP NIC 3.0 adapter:
   a. Rotate the locking pin to the open (vertical) position (callout 1).
   b. Slide the adapter into the bay until it clicks into place (callout 2).

      Make sure that the card is seated firmly in the slot.
   c. Rotate the locking pin to the close (horizontal) position (callout 3).

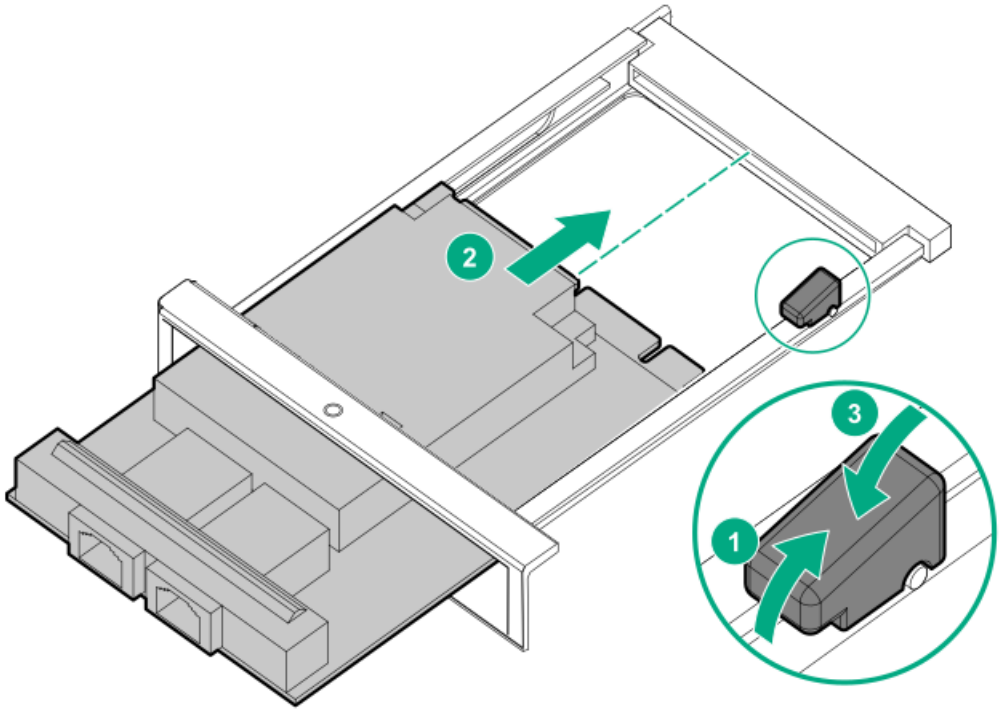

9. If you are installing an OCP NIC 3.0 x16 adapter, connect the OCP bandwidth upgrade cable.
10. Install the primary riser.
11. Install the access panel.
12. Install the server into the rack.

13. Connect each power cord to the server.
14. Connect each power cord to the power source.
15. Power up the server.

Installing the chassis intrusion detection switch

Prerequisites

Before you perform this procedure, make sure that you have the components included with the hardware option kit.

Procedure

1. Power down the server.
2. If installed, release the cable management arm.
3. Remove all power:
   a. Disconnect each power cord from the power source.
   b. Disconnect each power cord from the server.
4. Do one of the following:
   - Extend the server from the rack.
   - Remove the server from the rack.
5. Remove the access panel.
6. Insert the switch holder tabs into the chassis slots until the holder clicks into place.

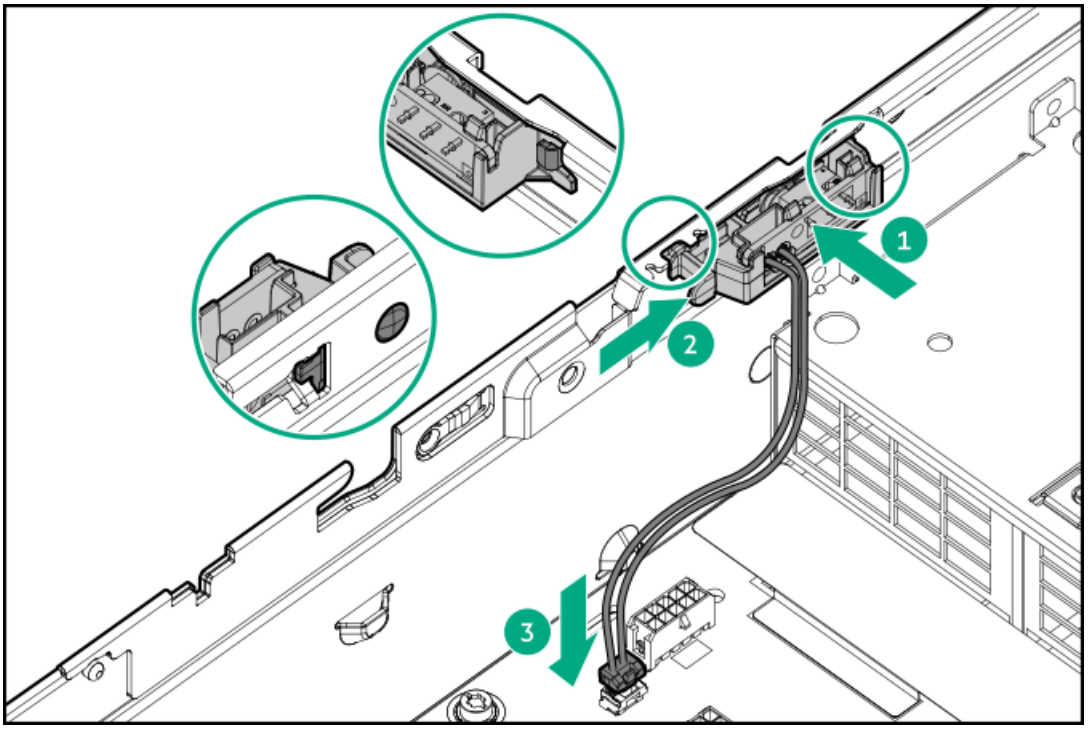

7. Install the access panel.
8. Install the server into the rack.

9. Connect each power cord to the server.
10. Connect each power cord to the power source.
11. Power up the server.

Installing the serial port option

Prerequisites

Before you perform this procedure, make sure that you have a hex screwdriver available.

Procedure

1. Power down the server.
2. If installed, release the cable management arm .
3. Remove all power:
   a. Disconnect each power cord from the power source.
   b. Disconnect each power cord from the server.
4. Remove the server from the rack .
5. Remove the access panel.
6. Remove the secondary riser cage.
7. Remove the serial port blank.

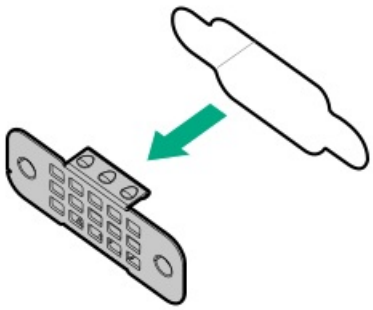

8. Install the serial port cable.

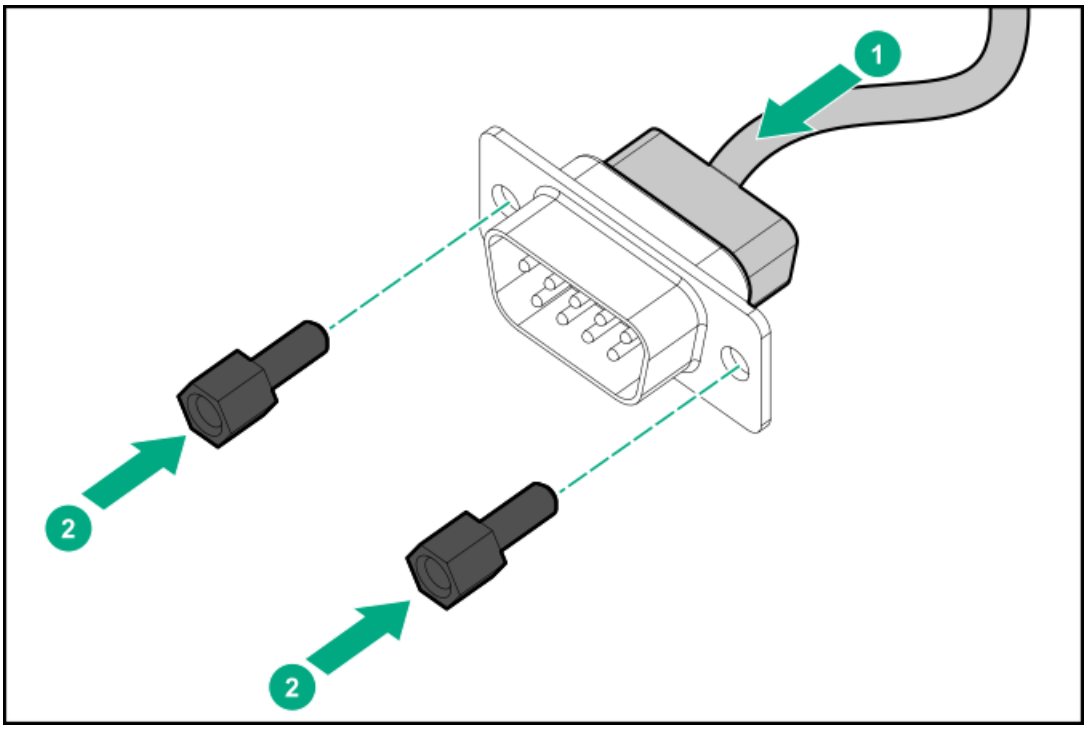

9. Connect the serial port cable and attach the cable to the back of the USB port.

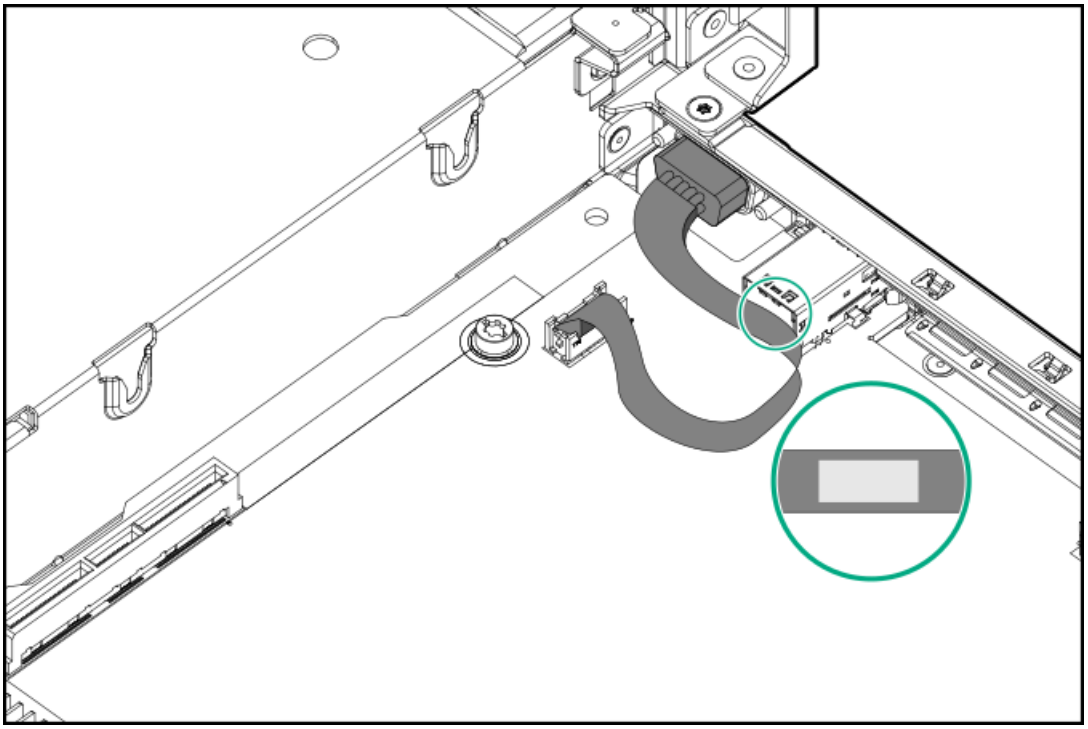

10. Install the secondary riser cage.
11. Install the access panel.
12. Install the server in the rack.
13. Connect each power cord to the server.
14. Connect each power cord to the power source.
15. Power up the server.
16. Configure the serial port:
    a. From the boot screen, press F9 to enter UEFI System Utilities.

b. From the UEFI System Utilities screen, select System Configuration > BIOS/Platform Configuration (RBSU) > System Options > Serial Port Options > Embedded Serial Port.

c. Select a setting.

d. Press F12:Save and Exit.

e. To save the setting, click Yes-Save Changes.

f. Click Reboot.

HPE Trusted Platform Module 2.0 Gen10 Plus option

Subtopics

Overview
HPE Trusted Platform Module 2.0 guidelines
Installing and enabling the HPE TPM 2.0 Gen10 Plus option

Overview

Use these instructions to install and enable an HPE TPM 2.0 Gen10 Plus Kit in a supported server. This option is not supported on Gen10 and earlier servers.

This procedure includes three sections:

1. Installing the Trusted Platform Module board.
2. Enabling the Trusted Platform Module.
3. Retaining the recovery key/password.

HPE TPM 2.0 installation is supported with specific operating system support such as Microsoft Windows Server 2012 R2 and later. For more information about operating system support, see the product QuickSpecs on the Hewlett Packard Enterprise website (https://www.hpe.com/info/qs). For more information about Microsoft Windows BitLocker Drive Encryption feature, see the Microsoft website (https://www.microsoft.com).

CAUTION

If the TPM is removed from the original server and powered up on a different server, data stored in the TPM including keys will be erased.

IMPORTANT

In UEFI Boot Mode, the can be configured to operate as TPM 2.0 (default) or TPM 1.2 on a supported server. In Legacy Boot Mode, the configuration can be changed between TPM 1.2 and TPM 2.0, but only TPM 1.2 operation is supported.

HPE Trusted Platform Module 2.0 guidelines

CAUTION

Always observe the guidelines in this document. Failure to follow these guidelines can cause hardware damage or halt data access.

Hewlett Packard Enterprise SPECIAL REMINDER: Before enabling TPM functionality on this system, you must ensure that your intended use of TPM complies with relevant local laws, regulations and policies, and approvals or licenses must be obtained if applicable.

For any compliance issues arising from your operation/usage of TPM which violates the above mentioned requirement, you shall bear all the liabilities wholly and solely. Hewlett Packard Enterprise will not be responsible for any related liabilities.

慧与特别提醒：在您启用系统中的TPM功能前，请务必确认您对TPM的使用遵守当地相关法律、法规及政策，并已事先获得所需的一切批准及许可（如适用），因您未获得相应的操作/使用许可而导致的违规问题，皆由您自行承担全部责任，与慧与无涉。

When installing or replacing a TPM, observe the following guidelines:

- Do not remove an installed TPM. Once installed, the TPM becomes a permanent part of the system board.
- When installing or replacing hardware, Hewlett Packard Enterprise service providers cannot enable the TPM or the encryption technology. For security reasons, only the customer can enable these features.
- When returning a system board for service replacement, do not remove the TPM from the system board. When requested, Hewlett Packard Enterprise Service provides a TPM with the spare system board.
- Any attempt to remove the cover of an installed TPM from the system board can damage the TPM cover, the TPM, and the system board.
- If the TPM is removed from the original server and powered up on a different server, all data stored in the TPM including keys will be erased.
- When using BitLocker, always retain the recovery key/password. The recovery key/password is required to complete Recovery Mode after BitLocker detects a possible compromise of system integrity.
- Hewlett Packard Enterprise is not liable for blocked data access caused by improper TPM use. For operating instructions, see the TPM documentation or the encryption technology feature documentation provided by the operating system.

Installing and enabling the HPE TPM 2.0 Gen10 Plus option

Subtopics

Installing the Trusted Platform Module board
Enabling the Trusted Platform Module
Retaining the BitLocker recovery key/password

Installing the Trusted Platform Module board

Subtopics

Preparing the server for installation
Installing the TPM board and cover
Preparing the server for operation

Preparing the server for installation

About this task

WARNING

To reduce the risk of personal injury, electric shock, or damage to the equipment, disconnect the power cord to remove power from the server. Pressing the Power On/Standby button does not shut off system power completely. Portions of the power supply and some internal circuitry remain active until AC power is removed.

WARNING

To reduce the risk of personal injury from hot surfaces, allow the drives and the internal system components to cool before touching them.

Procedure

1. Update the system ROM.

   Locate and download the latest ROM version from the Hewlett Packard Enterprise Support Center website (**https://www.hpe.com/support/hpesc**). To update the system ROM, follow the instructions on the website.
2. Power down the server.
3. If installed, release the cable management arm.
4. Remove all power:
   a. Disconnect each power cord from the power source.
   b. Disconnect each power cord from the server.
5. Do one of the following:
   - Extend the server from the rack.
   - Remove the server from the rack.
6. Remove the access panel.
7. Remove the air baffle.
8. Proceed to "Installing the TPM board and cover."

Installing the TPM board and cover

Procedure

1. Observe the following alerts:

   CAUTION

   If the TPM is removed from the original server and powered up on a different server, data stored in the TPM including keys will be erased.

   CAUTION

   The TPM is keyed to install only in the orientation shown. Any attempt to install the TPM in a different orientation might result in damage to the TPM or system board.
2. Install the TPM board:
   a. Locate the TPM connector on the system board. See the server hood label for the exact location.

b. Align the TPM board with the key on the connector, and then install the TPM board. To seat the board, press the TPM board firmly into the connector.

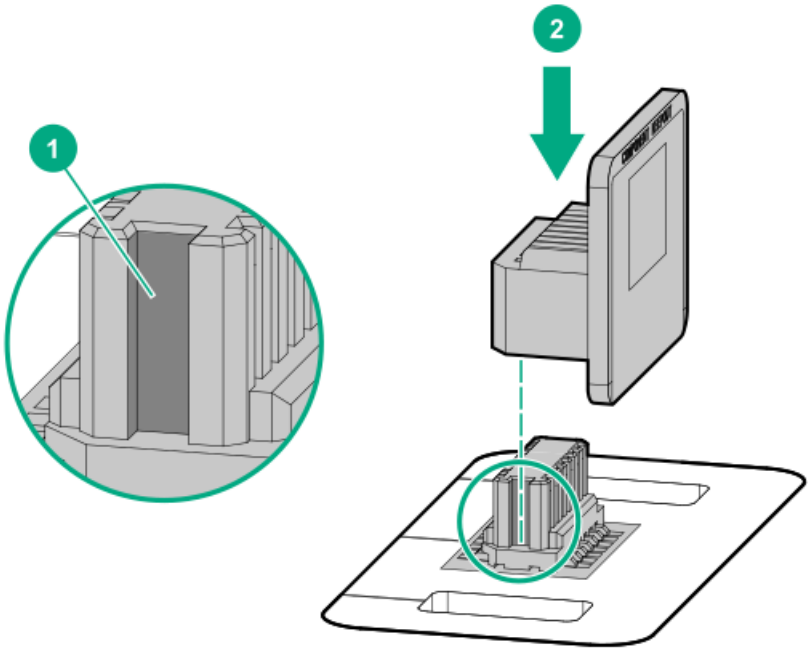

3. Install the TPM cover:

   a. Align the pins on the cover with the openings on the system board.

   b. Press straight down on the middle of the cover until the alignment pins are seated into the holes.

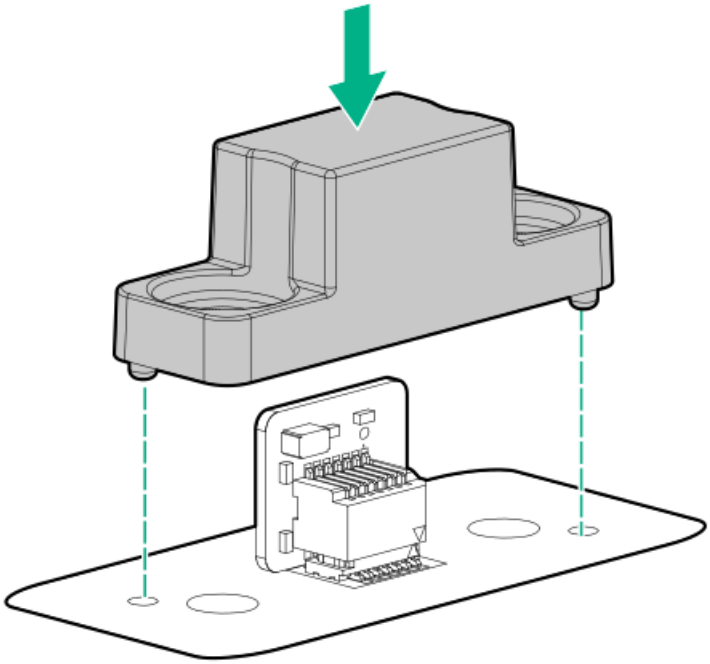

4. Secure the rivets into place by pushing them firmly through the holes in the TPM cover.

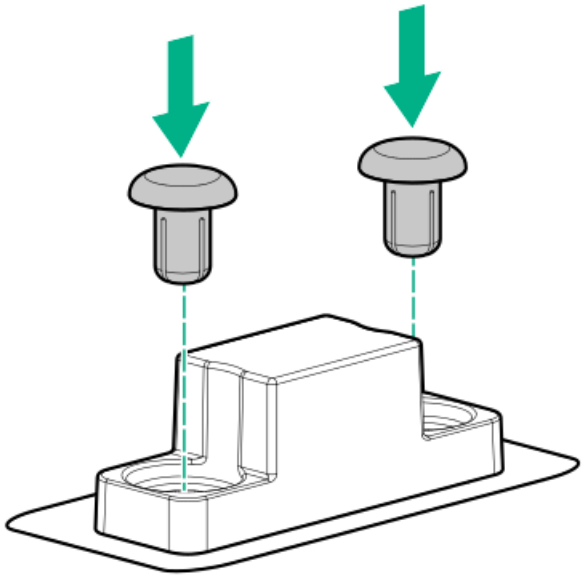

5. Proceed to "Preparing the server for operation."

Preparing the server for operation

Procedure

1. Install the air baffle
2. Install the access panel.
3. Install the server into the rack.
4. Connect each power cord to the server.
5. Connect each power cord to the power source.
6. Power up the server.
7. Enabling the Trusted Platform Module.

Enabling the Trusted Platform Module

When enabling the Trusted Platform module, observe the following guidelines:

- By default, the Trusted Platform Module is enabled as TPM 2.0 when the server is powered on after installing it.
- In UEFI Boot Mode, the Trusted Platform Module can be configured to operate as TPM 2.0 (default) or TPM 1.2.
- In Legacy Boot Mode, the Trusted Platform Module configuration can be changed between TPM 1.2 and TPM 2.0 (default), but only TPM 1.2 operation is supported.

Subtopics

Enabling the Trusted Platform Module as TPM 2.0
Enabling the Trusted Platform Module as TPM 1.2

Enabling the Trusted Platform Module as TPM 2.0

About this task

Procedure

1. During the server startup sequence, press the F9 key to access System Utilities.
2. From the System Utilities screen, select System Configuration > BIOS/Platform Configuration (RBSU) > Server Security > Trusted Platform Module options.
3. Verify the following:
   - "Current TPM Type" is set to TPM 2.0.
   - "Current TPM State" is set to Present and Enabled.
   - "TPM Visibility" is set to Visible.
4. If changes were made in the previous step, press the F10 key to save your selection.
5. If F10 was pressed in the previous step, do one of the following:
   - If in graphical mode, click Yes.
   - If in text mode, press the Y key.
6. Press the ESC key to exit System Utilities.
7. If changes were made and saved, the server prompts for reboot request. Press the Enter key to confirm reboot.

   If the following actions were performed, the server reboots a second time without user input. During this reboot, the TPM setting becomes effective.
   - Changing from TPM 1.2 and TPM 2.0
   - Changing TPM bus from FIFO to CRB
   - Enabling or disabling TPM
   - Clearing the TPM
8. Enable TPM functionality in the OS, such as Microsoft Windows BitLocker or measured boot.

   For more information, see the **Microsoft website**.

Enabling the Trusted Platform Module as TPM 1.2

About this task

Procedure

1. During the server startup sequence, press the F9 key to access System Utilities.
2. From the System Utilities screen select System Configuration > BIOS/Platform Configuration (RBSU) > Server Security > Trusted Platform Module options.

3. Change the "TPM Mode Switch Operation" to TPM 1.2.
4. Verify that "TPM Visibility" is set to Visible.
5. Press the F10 key to save your selection.
6. When prompted to save the change in System Utilities, do one of the following:
   - If in graphical mode, click Yes.
   - If in text mode, press the Y key.
7. Press the ESC key to exit System Utilities.

   The server reboots a second time without user input. During this reboot, the TPM setting becomes effective.
8. Enable TPM functionality in the OS, such as Microsoft Windows BitLocker or measured boot.

   For more information, see the **Microsoft website**.

Retaining the BitLocker recovery key/password

The recovery key/password is generated during BitLocker setup, and can be saved and printed after BitLocker is enabled. When using BitLocker, always retain the recovery key/password. The recovery key/password is required to enter Recovery Mode after BitLocker detects a possible compromise of system integrity.

To help ensure maximum security, observe the following guidelines when retaining the recovery key/password:

- Always store the recovery key/password in multiple locations.
- Always store copies of the recovery key/password away from the server.
- Do not save the recovery key/password on the encrypted hard drive.

Cabling

This chapter includes cabling guidelines and diagrams for internal component cabling.

Subtopics

Cabling guidelines
Storage cabling
M.2 SATA SSD cabling
Accelerator or GPU power cabling
Fan cabling
OCP bandwidth upgrade cabling
Serial port cabling
Chassis intrusion detection switch cabling
Front I/O cabling

Cabling guidelines

The cable colors in the cabling diagrams used in this chapter are for illustration purposes only. Most of the system cables are black.

Observe the following guidelines when working with system cables.

Before connecting cables

- Note the port labels on the PCA components. Not all of these components are used by all systems:
  - System board ports
  - Drive and power supply backplane ports
  - Expansion card ports (controllers, adapters, expanders, risers, and similar boards)
- Note the label near each cable connector. This label indicates the destination port for the cable connector.
- Some data cables are pre-bent. Do not unbend or manipulate the cables.
- To prevent mechanical damage or depositing oil that is present on your hands, and other contamination, do not touch the ends of the connectors.

When connecting cables

- Before connecting a cable to a port, lay the cable in place to verify the length of the cable.
- Use the internal cable management features to properly route and secure the cables.
- When routing cables, be sure that the cables are not in a position where they can be pinched or crimped.
- Avoid tight bend radii to prevent damaging the internal wires of a power cord or a server cable. Never bend power cords and server cables tight enough to cause a crease in the sheathing.
- Make sure that the excess length of cables are properly secured to avoid excess bends, interference issues, and airflow restriction.
- To prevent component damage and potential signal interference, make sure that all cables are in their appropriate routing position before installing a new component and before closing up the system after hardware installation/maintenance.

When disconnecting cables

- Grip the body of the cable connector. Do not pull on the cable itself because this action can damage the internal wires of the cable or the pins on the port.
- If a cable does not disconnect easily, check for any release latch that must be pressed to disconnect the cable.

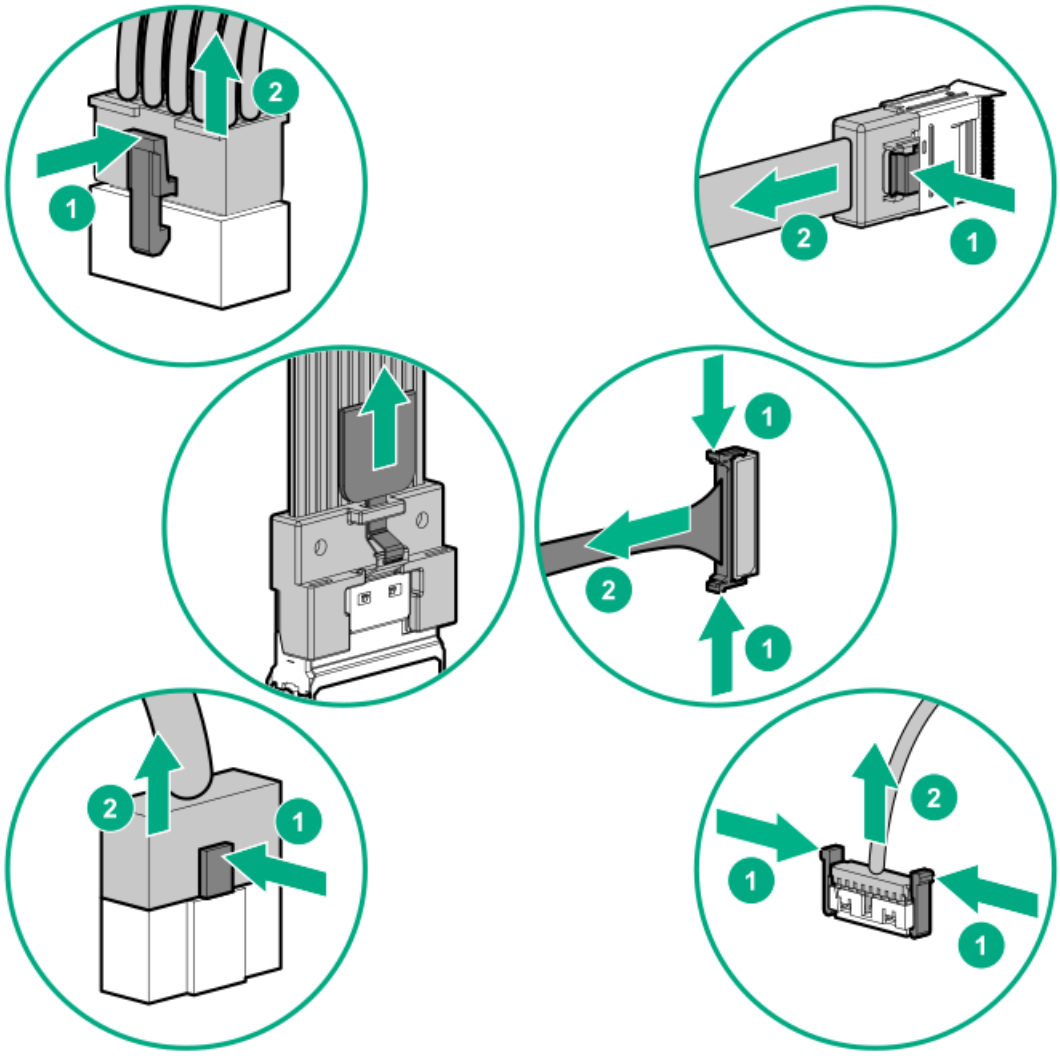

- Remove cables that are no longer being used. Retaining them inside the system can restrict airflow. If you intend to use the removed cables later, label and store them for future use.

Storage cabling

Subtopics

Drive power cabling
Storage controller cabling
Energy pack cabling
Storage controller backup power cabling

Drive power cabling

Subtopics

12 LFF drive power cabling
24 SFF drive power cabling
2 SFF drive power cabling

12 LFF drive power cabling

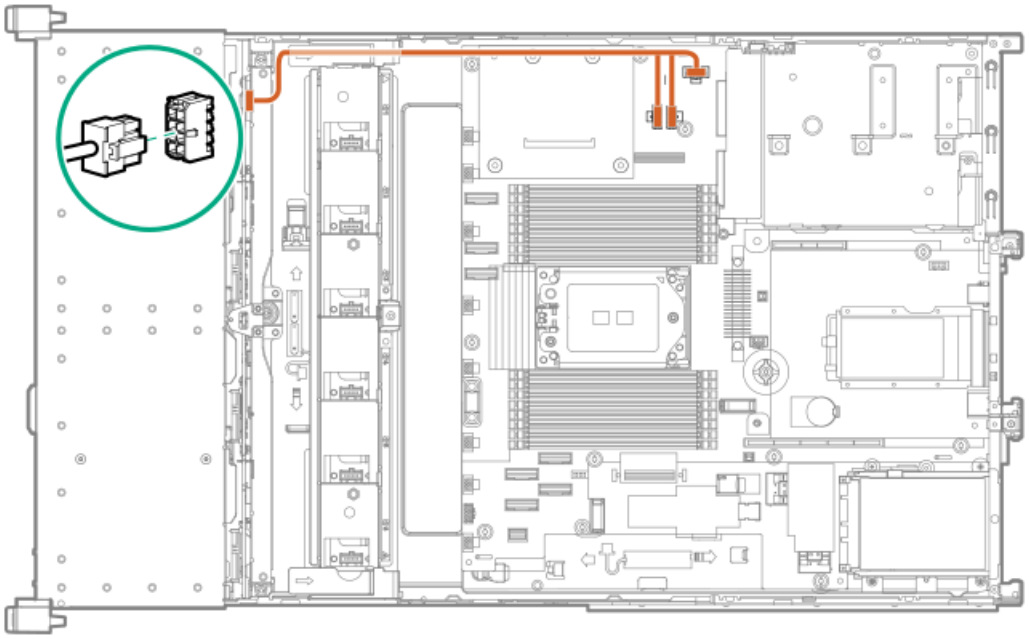

Description
4LFF BOX1 to power connector (J37)
4LFF BOX2 to power connector (J68)
4LFF BOX3 to power connector (J42)

24 SFF drive power cabling

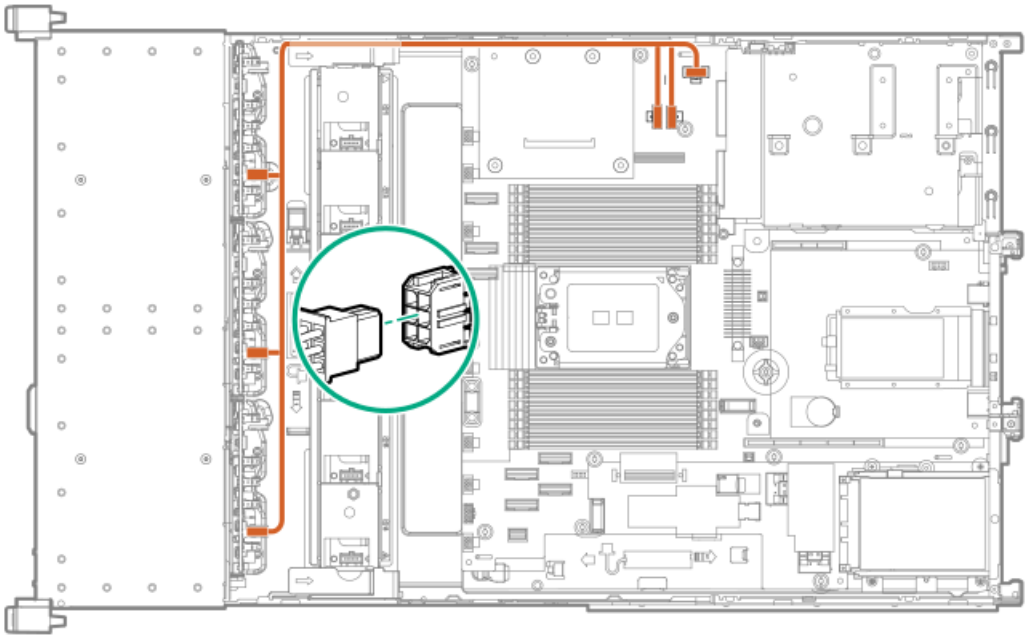

Description
8SFF BOX1 to power connector (J37)
8SFF BOX2 to power connector (J68)
8SFF BOX3 to power connector (J42)

2 SFF drive power cabling

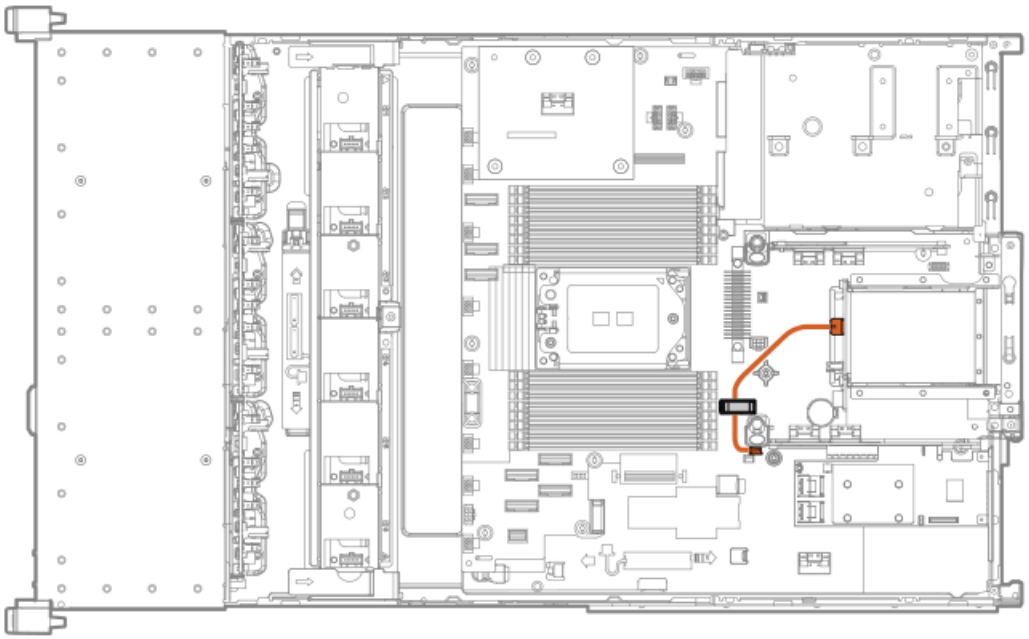

Storage controller cabling

Subtopics

8 LFF SATA Box 2 and Box 3 to system board connector (J17) cabling
8 LFF SAS/SATA Box 2 and Box 3 to type-a controller cabling
12 LFF SAS/SATA to P816-a controller cabling
12 LFF SAS/SATA + 2SFF to P816-a controller cabling
8 SFF SATA Box 3 to system board connector (J17) cabling
8 SFF SAS/SATA Box 3 to type-a controller cabling
8 SFF SAS/SATA Box 3 to PCIe controller cabling
8 SFF SAS/SATA Box 2 to type-a controller (E208i-a/E408i-a) cabling
8 SFF SAS/SATA Box 2 to type-a controller (P816i-a) cabling
8 SFF SAS/SATA Box 1 to type-a controller cabling
16 SFF SAS/SATA Box 2 and Box 3 to P816i-a controller cabling
24 SFF SAS/SATA to SAS expander cabling
8 SFF NVMe x4 Box 2 cabling
16 SFF SAS/SATA Box 1 and Box 3 to P816i-a controller cabling
16 SFF NVMe x4 Box 1 and Box 2 cabling
2 SFF SAS/SATA Box 4 to SAS expander port 9 cabling
8 SFF Basic U.3x1 to PCIe x16 or x32 tri-mode controller in primary riser cabling

8 SFF Basic U.3x1 to PCIe x16 or x32 Ttri-mode controller in secondary riser cabling
8 SFF Basic U.3x1 Box2 and Box3 to type-a tri-mode controller cabling
24 SFF NVMe x4 Premium U.2/U.3 cabling
8 SFF NVMe x4 Box 3 Premium U.2/U.3 to x32 tri-mode controller in primary riser cabling
8 SFF NVMe x4 Box 2 Premium U.2/U.3 to x32 tri-mode controller in primary riser cabling
8 SFF NVMe x4 Box 1 Premium U.2/U.3 to x32 tri-mode controller in secondary riser cabling
8 SFF NVMe x2 Box 3 Premium U.2/U.3 to x16 or x32 tri-mode controller in primary riser cabling
8 SFF NVMe x2 Box 2 Premium U.2/U.3 to x16 or x32 tri-mode controller cabling
8 SFF NVMe x2 Box 1 Premium U.2/U.3 to x16 or x32 tri-mode controller in secondary riser cabling
2 SFF SAS/SATA Box 4 to system board J1 (port 9A) cabling
2 SFF SAS/SATA Box 4 to type-a controller cabling
2 SFF NVMe Box 4 to tri-mode controller cabling

8 LFF SATA Box 2 and Box 3 to system board connector (J17) cabling

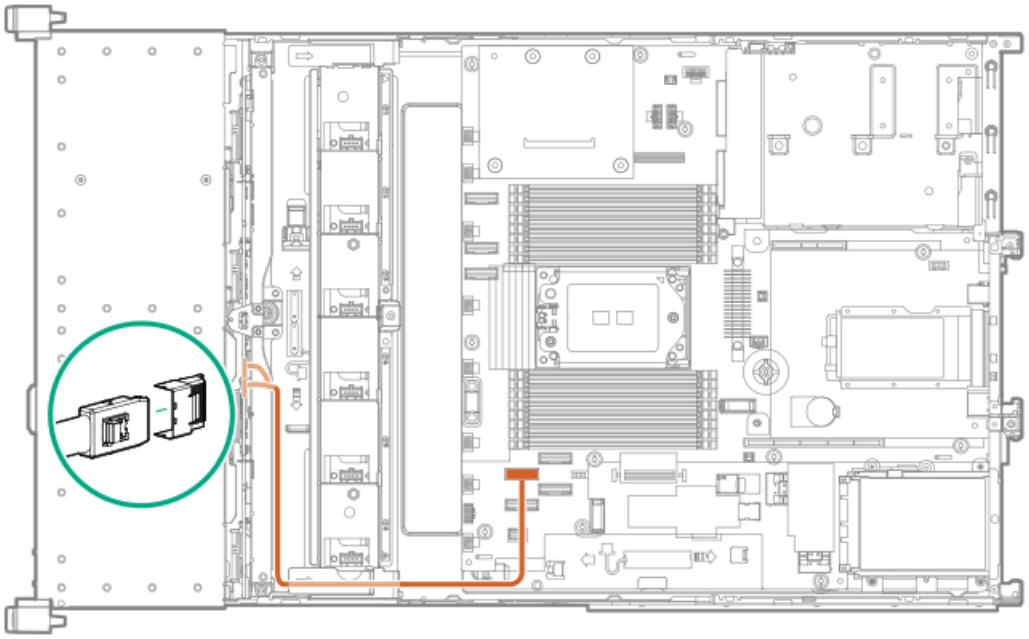

8 LFF SAS/SATA Box 2 and Box 3 to type-a controller cabling

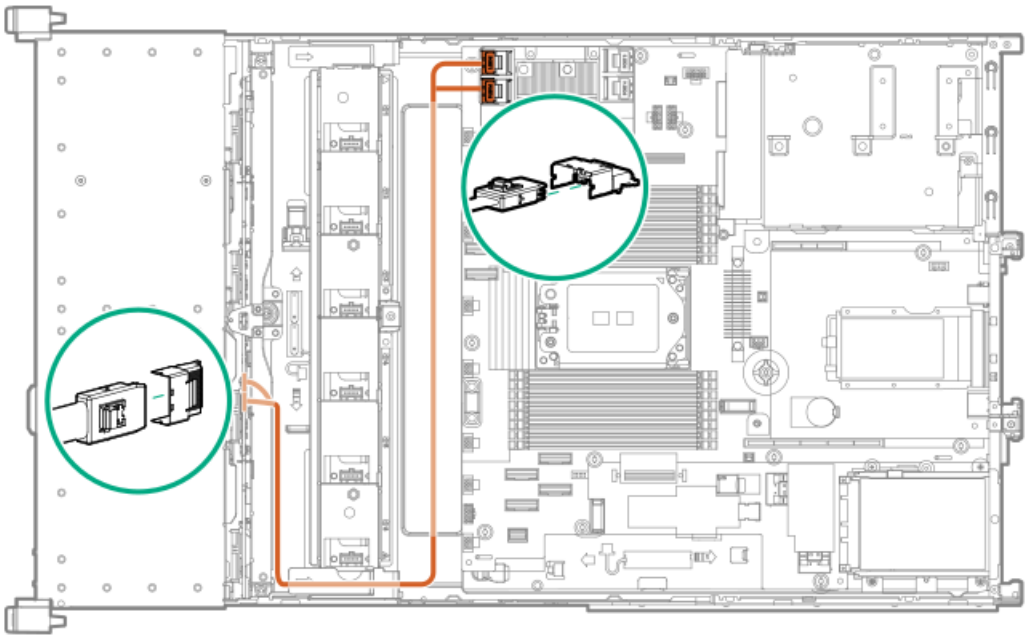

Description
Box 2 to controller port 2
Box 3 to controller port 1

12 LFF SAS/SATA to P816-a controller cabling

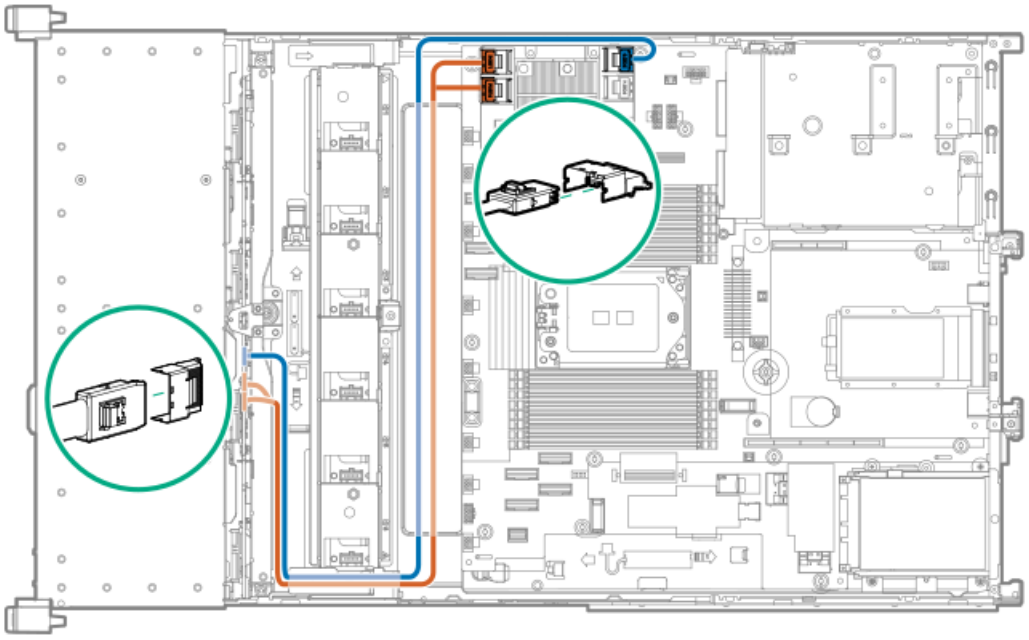

Item	Description
Orange	Box 2 to controller port 2
Orange	Box 3 to controller port 1
Blue	Box 1 to controller port 3

12 LFF SAS/SATA + 2SFF to P816-a controller cabling

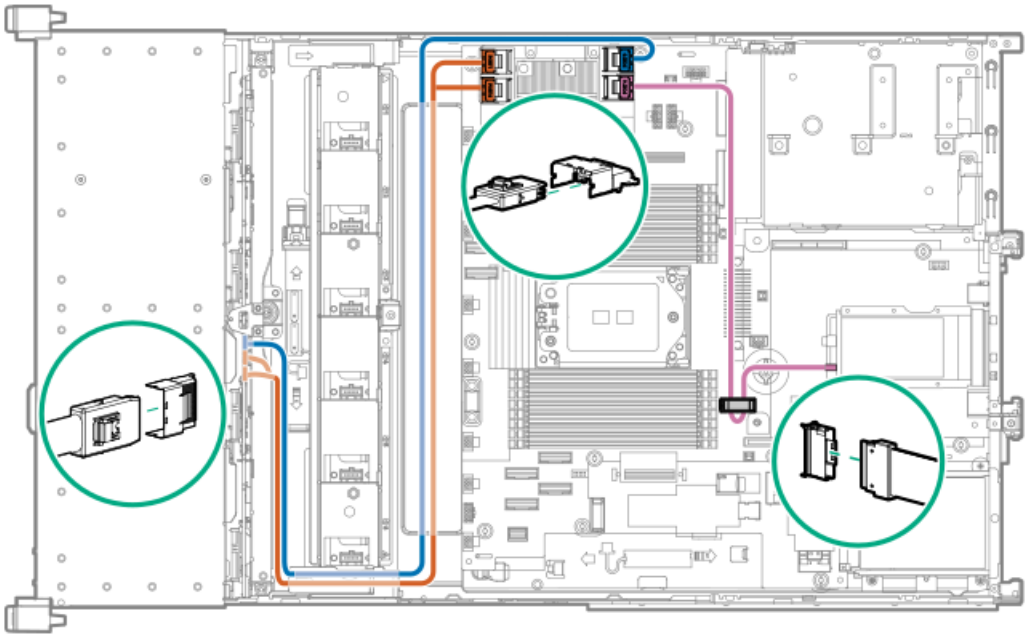

Item	Description
Orange	Box 2 to controller port 2
Orange	Box 3 to controller port 1
Blue	Box 1 to controller port 3
Pink	Box 4 to controller port 4

8 SFF SATA Box 3 to system board connector (J17) cabling

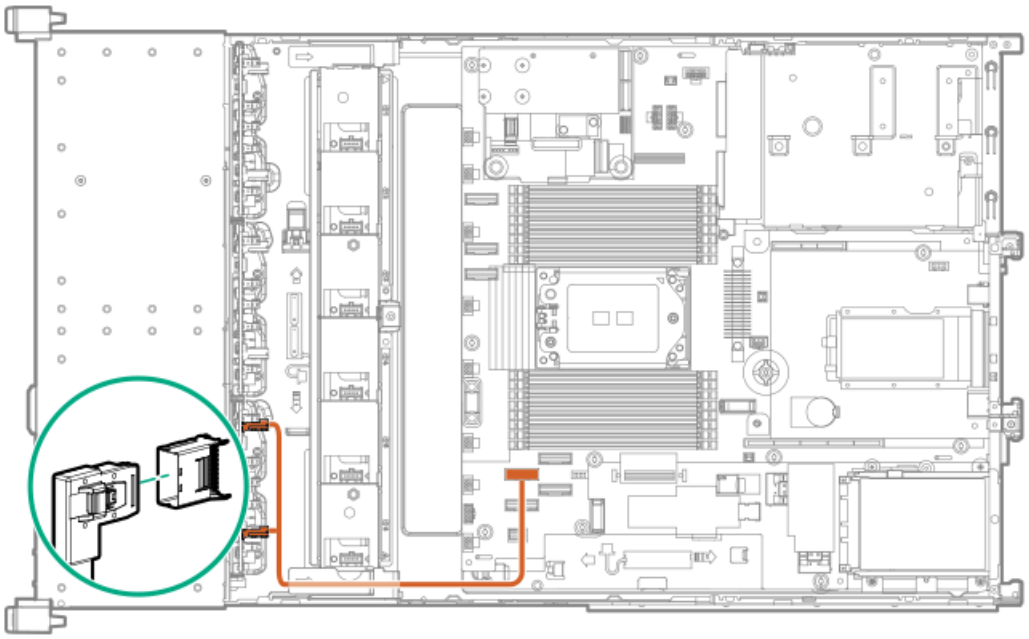

8 SFF SAS/SATA Box 3 to type-a controller cabling

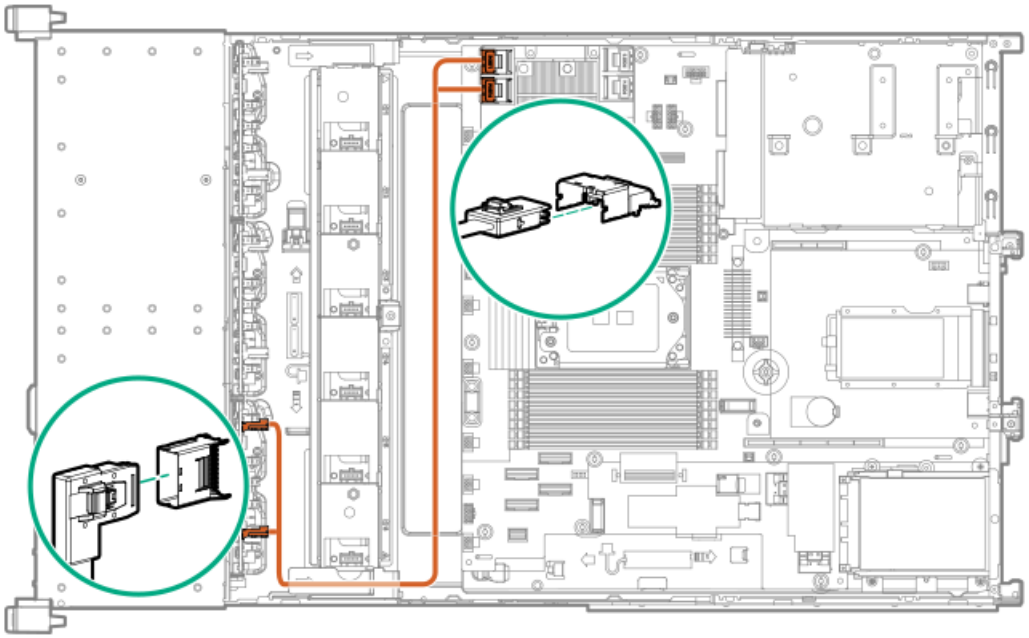

Description
Box 3 port 1 to controller port 1
Box 3 port 2 to controller port 2

8 SFF SAS/SATA Box 3 to PCIe controller cabling

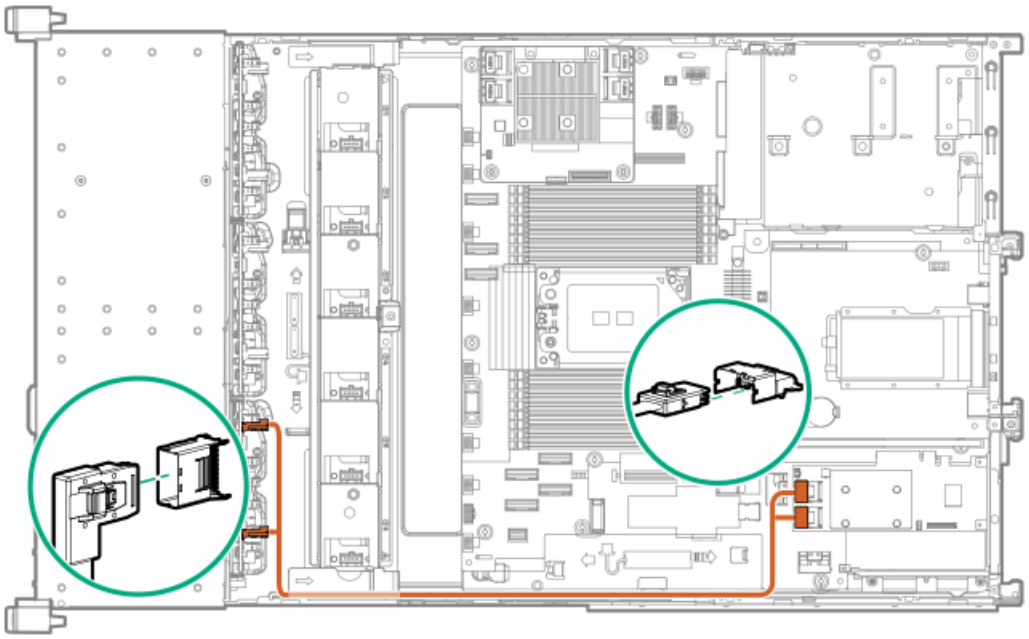

Description
Box 3 port 1 to controller port 1
Box 3 port 2 to controller port 2

8 SFF SAS/SATA Box 2 to type-a controller (E208i-a/E408i-a) cabling

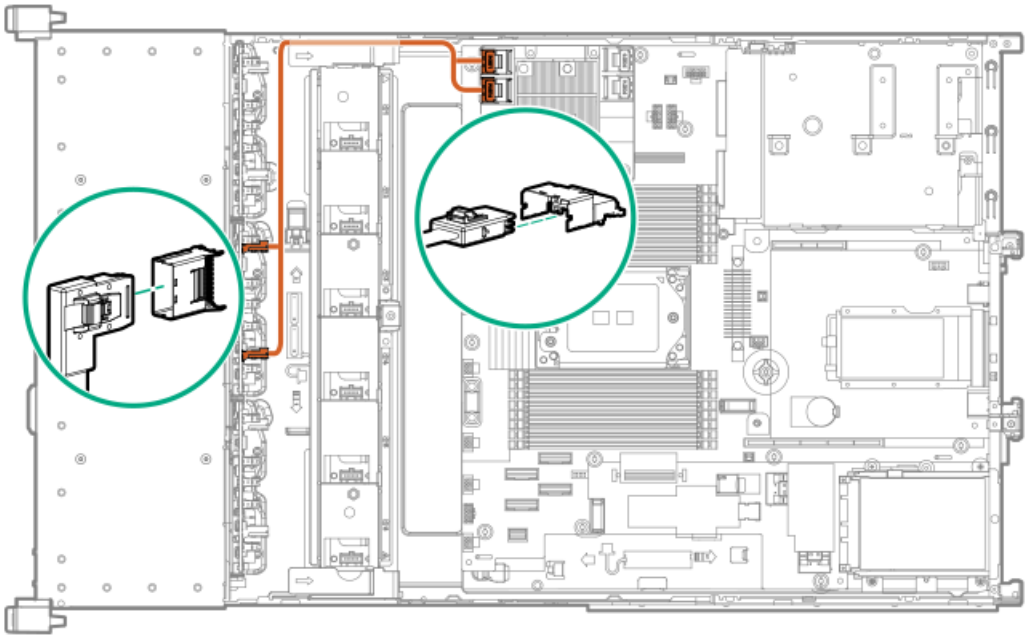

Description
Box 2 port 1 to controller port 1
Box 2 port 2 to controller port 2

8 SFF SAS/SATA Box 2 to type-a controller (P816i-a) cabling

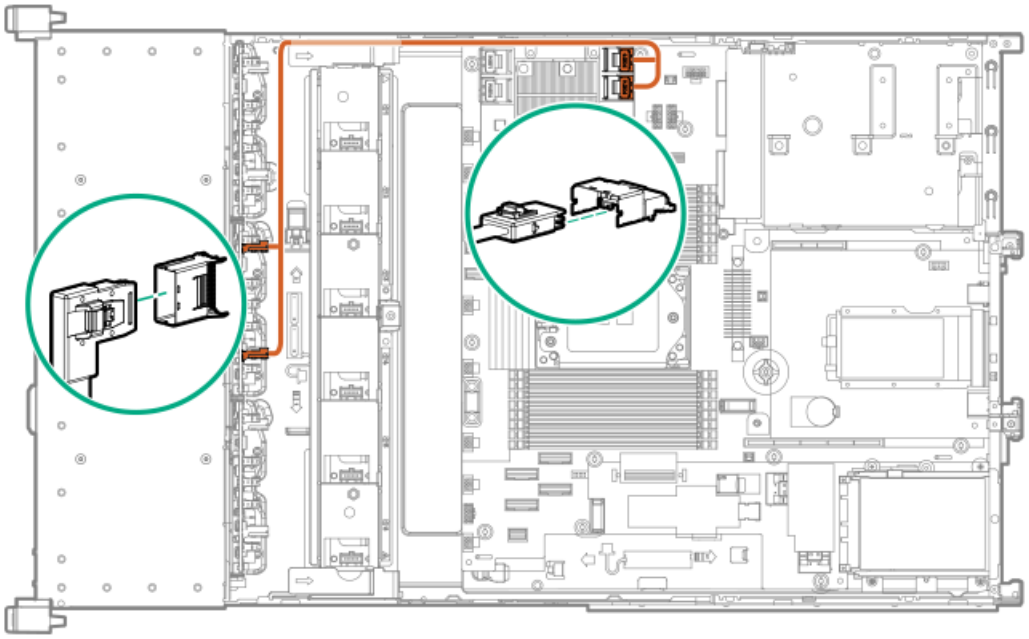

Description
Box 2 port 1 to controller port 3
Box 2 port 2 to controller port 4

8 SFF SAS/SATA Box 1 to type-a controller cabling

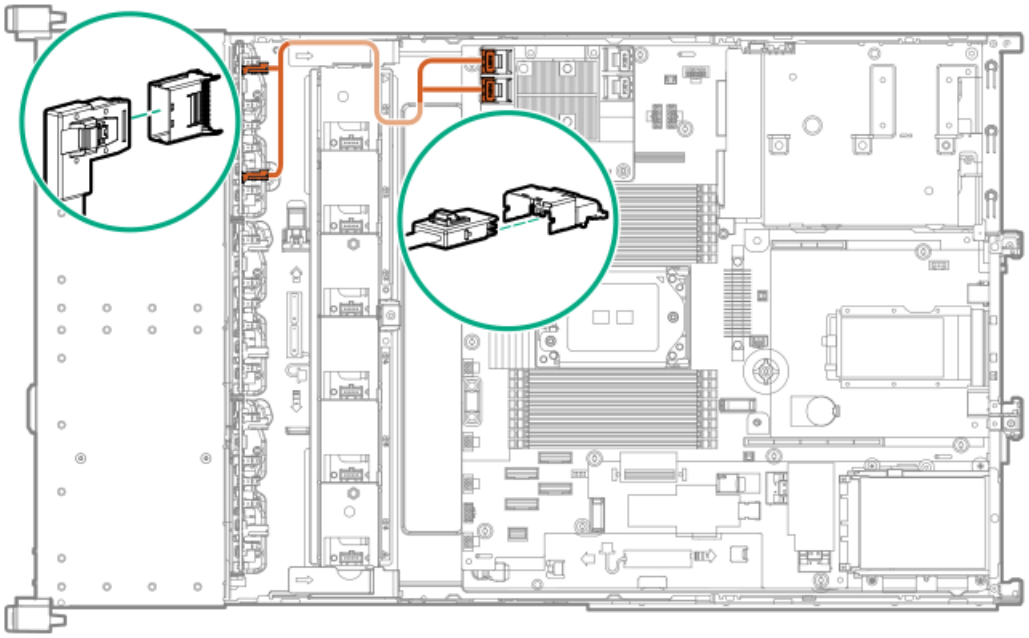

Description
Box 1 port 1 to controller port 1
Box 1 port 2 to controller port 2

16 SFF SAS/SATA Box 2 and Box 3 to P816i-a controller cabling

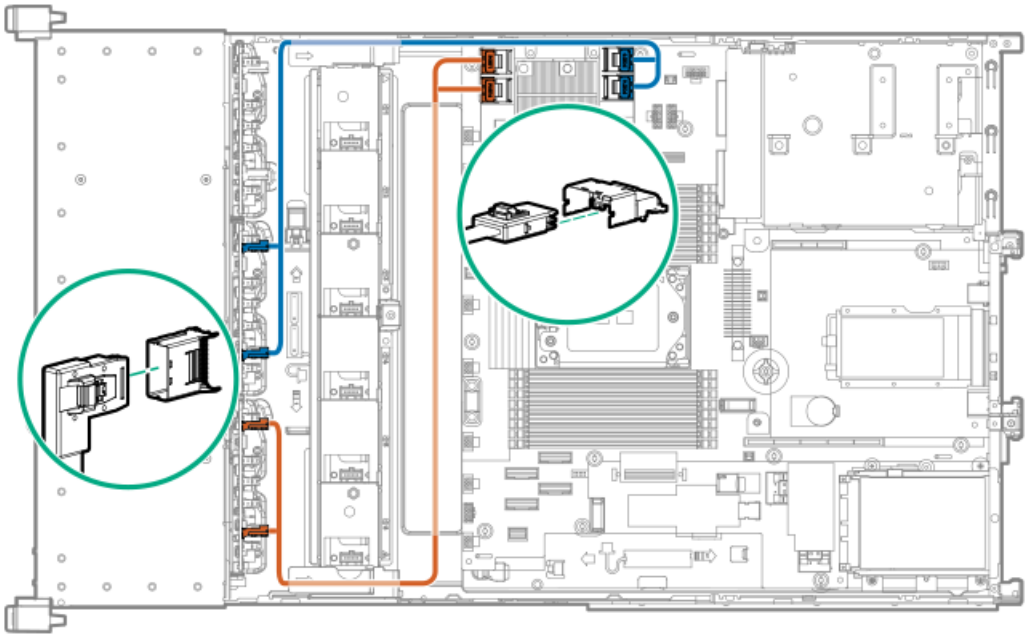

Item	Description
Blue	Box 2 port 1 to controller port 3
Blue	Box 2 port 2 to controller port 4
Orange	Box 3 port 1 to controller port 1
Orange	Box 3 port 2 to controller port 2

24 SFF SAS/SATA to SAS expander cabling

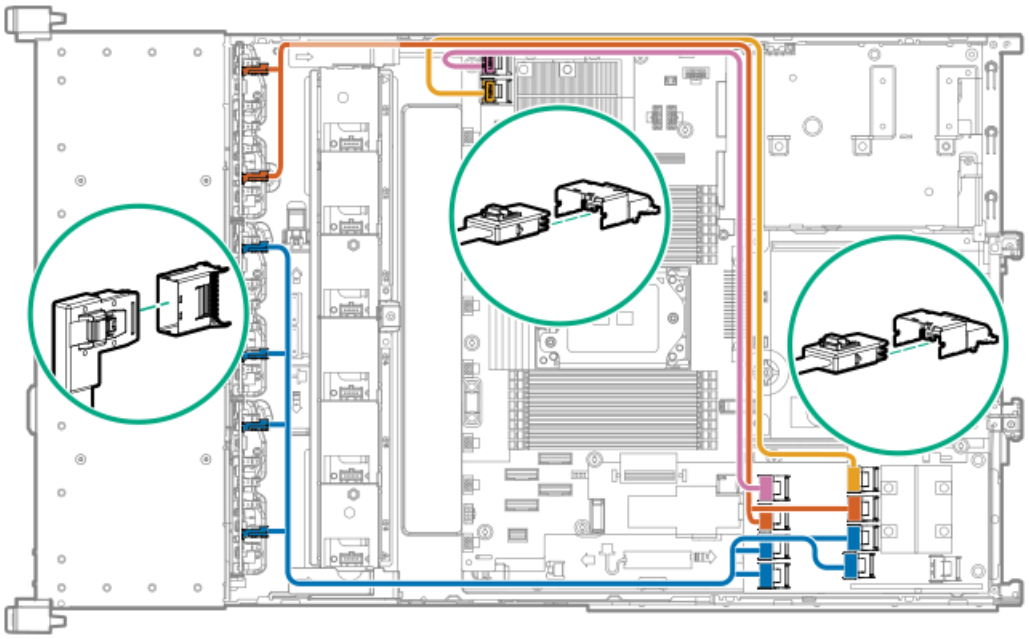

Item	Description
Orange	Box 1 port 1 to SAS expander port 3
Orange	Box 1 port 2 to SAS expander port 4
Blue	Box 2 port 1 to SAS expander port 5
Blue	Box 2 port 2 to SAS expander port 6
Blue	Box 3 port 1 to SAS expander port 7
Blue	Box 3 port 2 to SAS expander port 8
Pink	Type-a controller port 1 to SAS expander port 1
Gold	Type-a controller port 2 to SAS expander port 2

8 SFF NVMe x4 Box 2 cabling

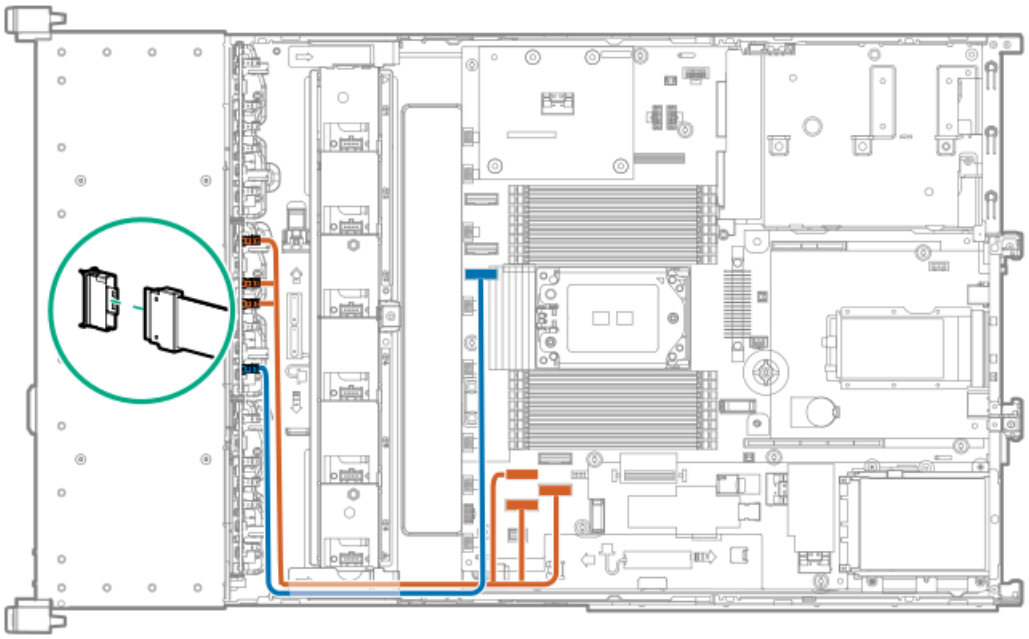

Item	Description
Orange	Box 2 port 1 to system board J17 (port 8A)
Orange	Box 2 port 2 to system board J18 (port 5A)
Orange	Box 2 port 3 to system board J67 (port 4A)
Blue	Box 2 port 4 to system board J57 (port 3A)

16 SFF SAS/SATA Box 1 and Box 3 to P816i-a controller cabling

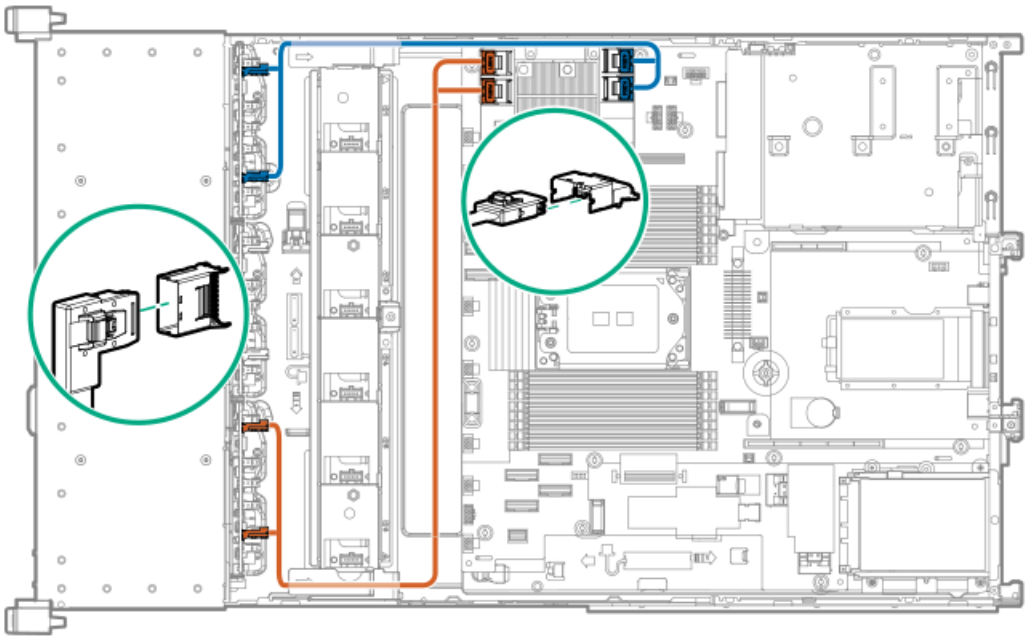

Item	Description
Blue	Box 1 port 1 to controller port 3
Blue	Box 1 port 2 to controller port 4
Orange	Box 3 port 1 to controller port 1
Orange	Box 3 port 2 to controller port 2

16 SFF NVMe x4 Box 1 and Box 2 cabling

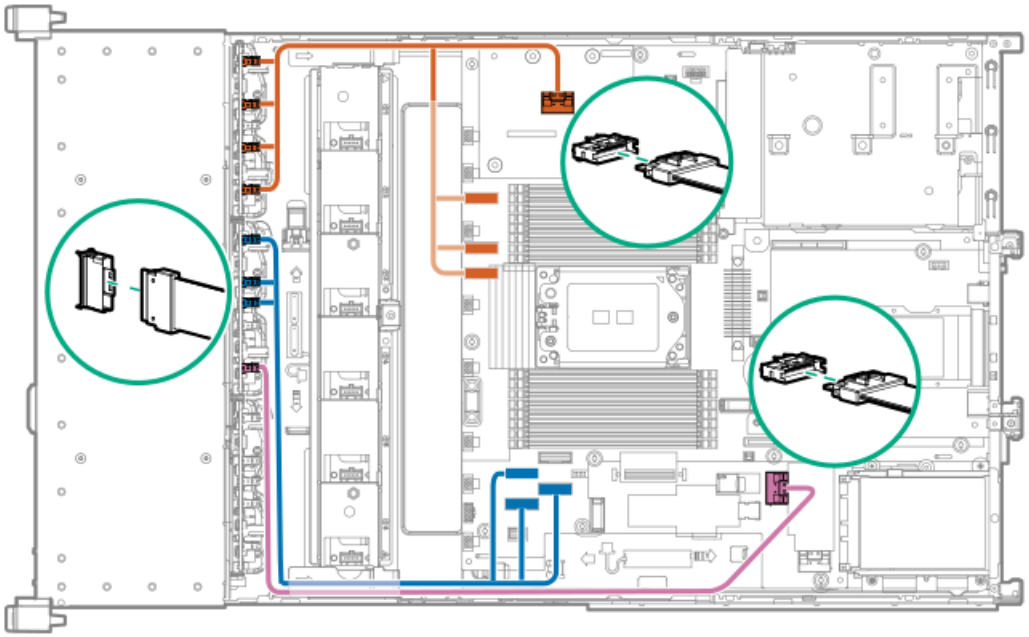

Item	Description
Orange	Box 1 port 1 to AROC 1 port NVMe adapter
Orange	Box 1 port 2 to system board J59 (port 2A)
Orange	Box 1 port 3 to system board J56 (port 1A)
Orange	Box 1 port 4 to system board J57 (port 3A)
Blue	Box 2 port 1 to system board J17 (port 8A)
Blue	Box 2 port 2 to system board J18 (port 5A)
Blue	Box 2 port 3 to system board J67 (port 4A)
Pink	Box 2 port 4 to system board J58 (port 6A)

2 SFF SAS/SATA Box 4 to SAS expander port 9 cabling

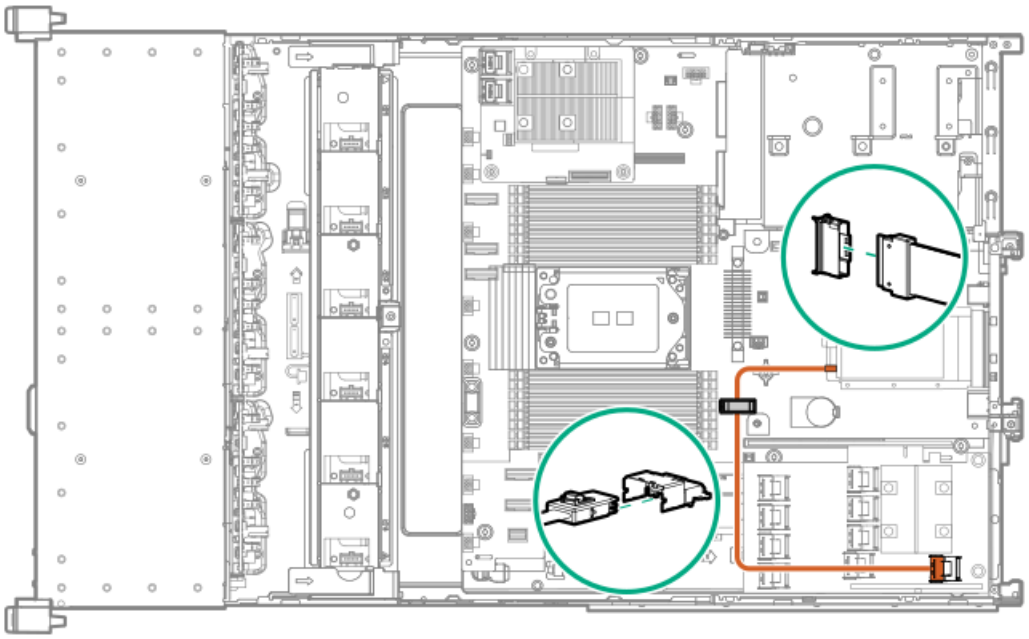

8 SFF Basic U.3x1 to PCIe x16 or x32 tri-mode controller in primary riser cabling

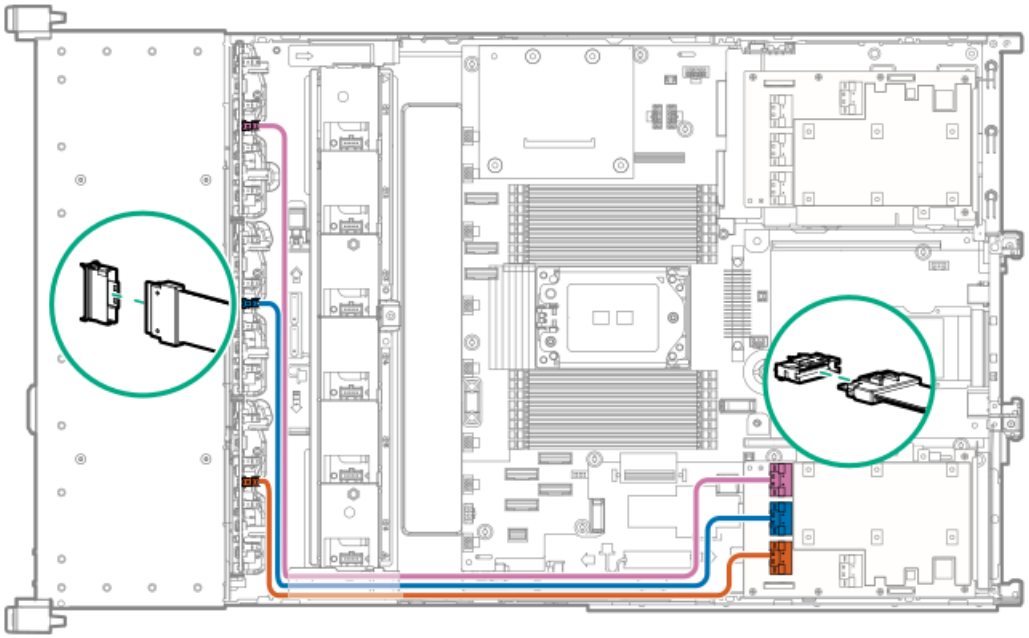

Item	Description
Pink	Box 1 port 1 to x16 controller port 1 or x32 controller port 4
Blue	Box 2 port 1 to x16 controller port 2 or x32 controller port 3
Orange	Box 3 port 1 to x16 controller port 1 or x32 controller port 2

8 SFF Basic U.3x1 to PCIe x16 or x32 Ttri-mode controller in secondary riser cabling

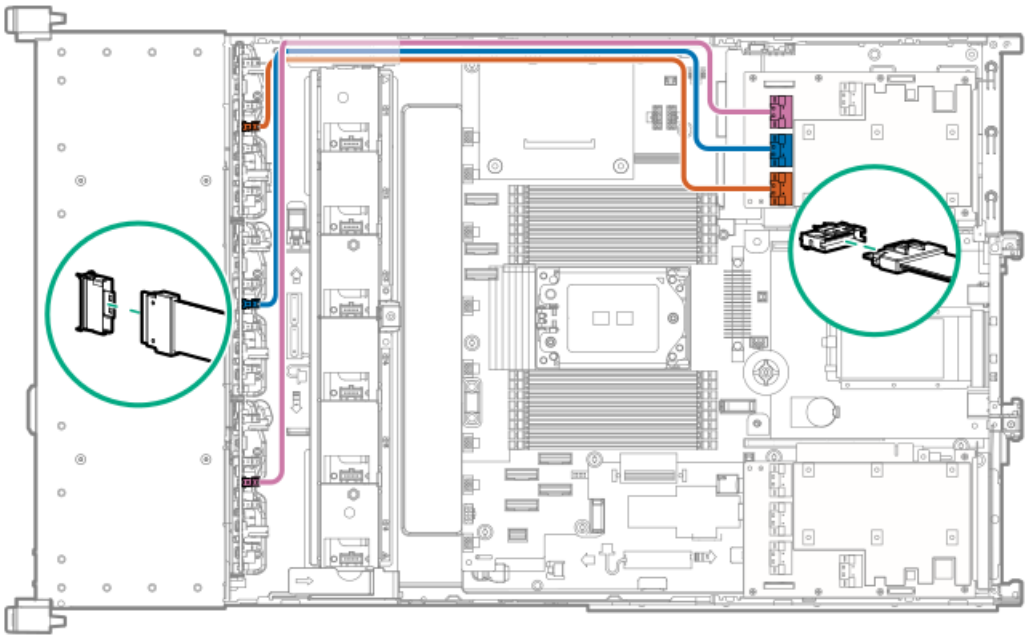

Item	Description
Orange	Box 1 port 1 to x16 controller port 1 or x32 controller port 4
Blue	Box 2 port 1 to x16 controller port 2 or x32 controller port 3
Pink	Box 3 port 1 to x16 controller port 1 or x32 controller port 2

8 SFF Basic U.3x1 Box2 and Box3 to type-a tri-mode controller cabling

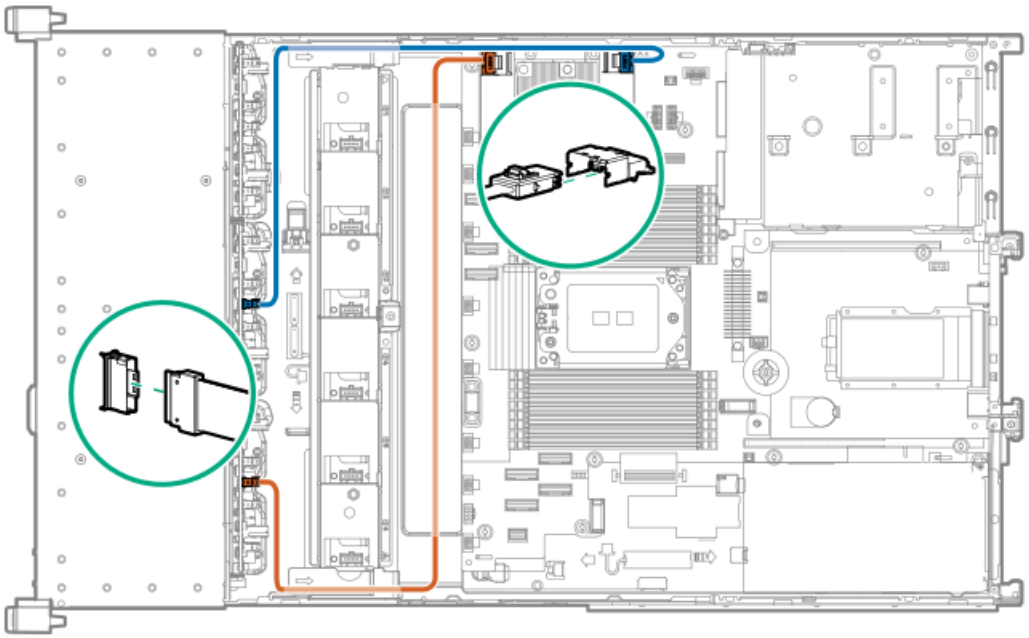

Item	Description
Blue	Box 2 port 1 to controller port 2
Orange	Box 3 port 1 to controller port 1

24 SFF NVMe x4 Premium U.2/U.3 cabling

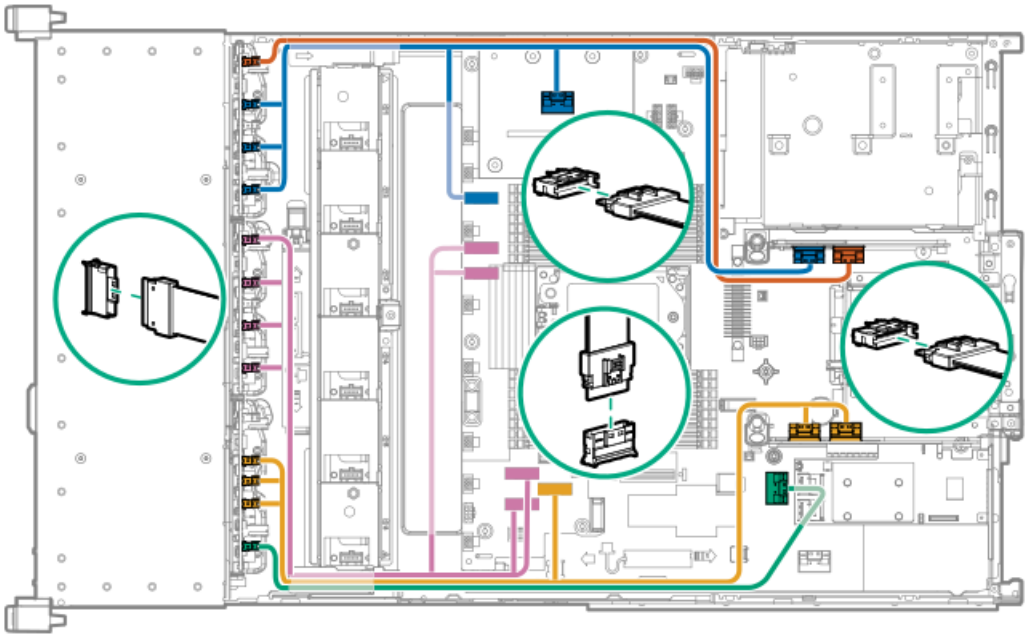

Item	Description
Orange	Box 1 port 1 to secondary riser J2 (port 2B)
Blue	Box 1 port 2 to secondary riser J1 (port 1B)
Blue	Box 1 port 3 to to AROC 1 port NVMe adapter
Blue	Box 1 port 4 to system boad J59 (port 2A)
Pink	Box 2 port 1 to system board J57 (port 3A)
Pink	Box 2 port 2 to system board J56 (port 1A)
Pink	Box 2 port 3 to system board J17 (port 8A)
Pink	Box 2 port 4 to system board J18 (port 5A)
Gold	Box 3 port 1 to system board J67 (port 4A)
Gold	Box 3 port 2 to primary riser J1 (port 3B)
Gold	Box 3 port 3 to primary riser J2 (port 4B)
Green	Box 3 port 4 to system board J58 (port 6A)

8 SFF NVMe x4 Box 3 Premium U.2/U.3 to x32 tri-mode controller in primary riser cabling

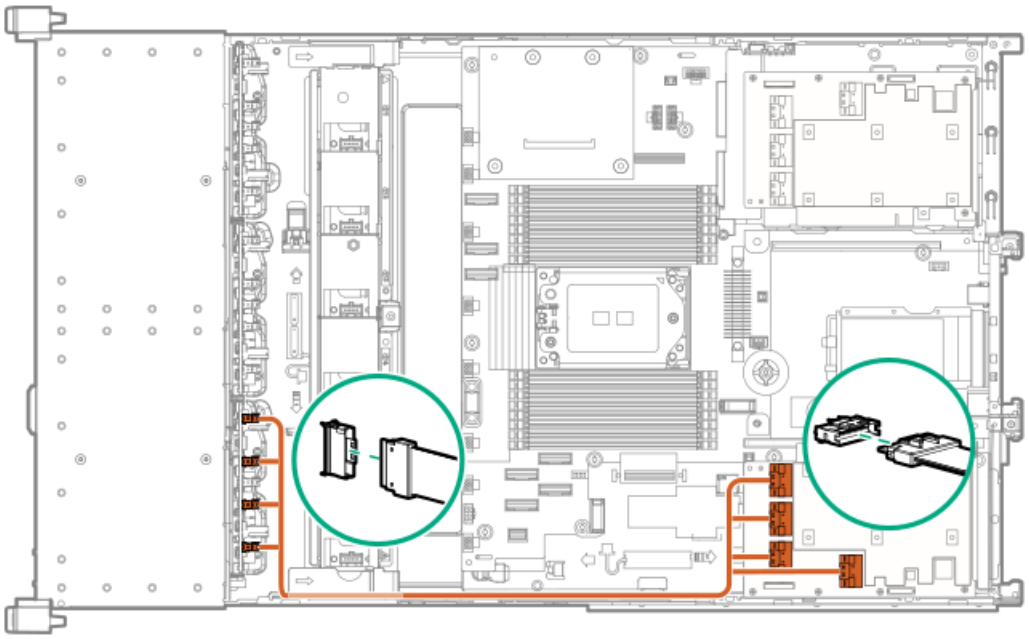

Description
Box 3 port 1 to controller port 1
Box 3 port 2 to controller port 2
Box 3 port 3 to controller port 3
Box 3 port 4 to controller port 4

8 SFF NVMe x4 Box 2 Premium U.2/U.3 to x32 tri-mode controller in primary riser cabling

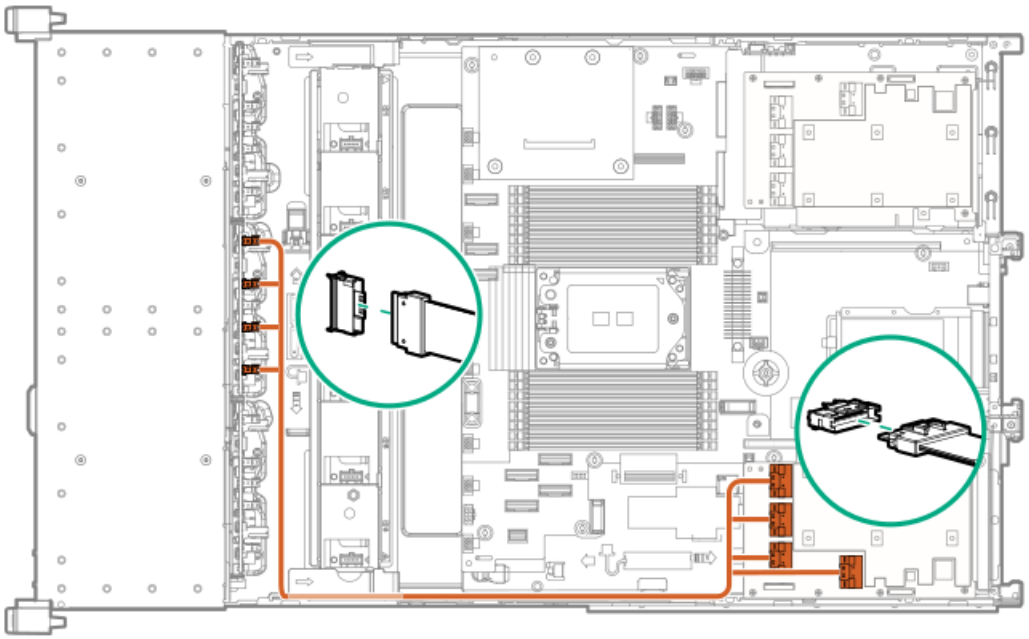

Description
Box 2 port 1 to controller port 1
Box 2 port 2 to controller port 2
Box 2 port 3 to controller port 3
Box 2 port 4 to controller port 4

8 SFF NVMe x4 Box 1 Premium U.2/U.3 to x32 tri-mode controller in secondary riser cabling



Description
Box 1 port 1 to controller port 1
Box 1 port 2 to controller port 2
Box 1 port 3 to controller port 3
Box 1 port 4 to controller port 4

8 SFF NVMe x2 Box 3 Premium U.2/U.3 to x16 or x32 tri-mode controller in primary riser cabling

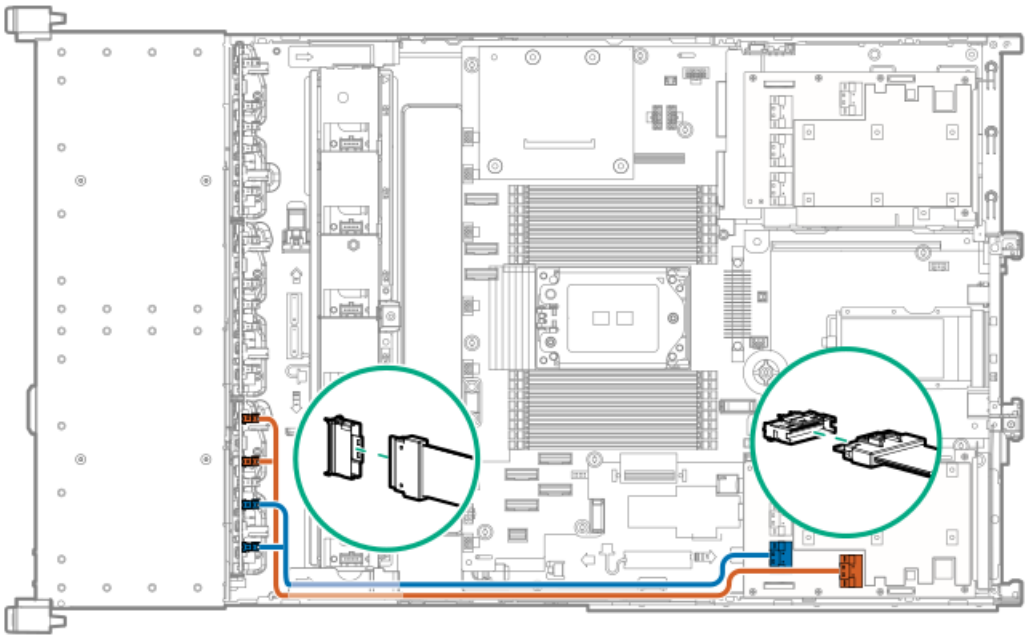

Item	Description
Orange	Box 3 port 1/2 to controller port 1
Blue	Box 3 port 3/4 to controller port 2

8 SFF NVMe x2 Box 2 Premium U.2/U.3 to x16 or x32 tri-mode controller cabling

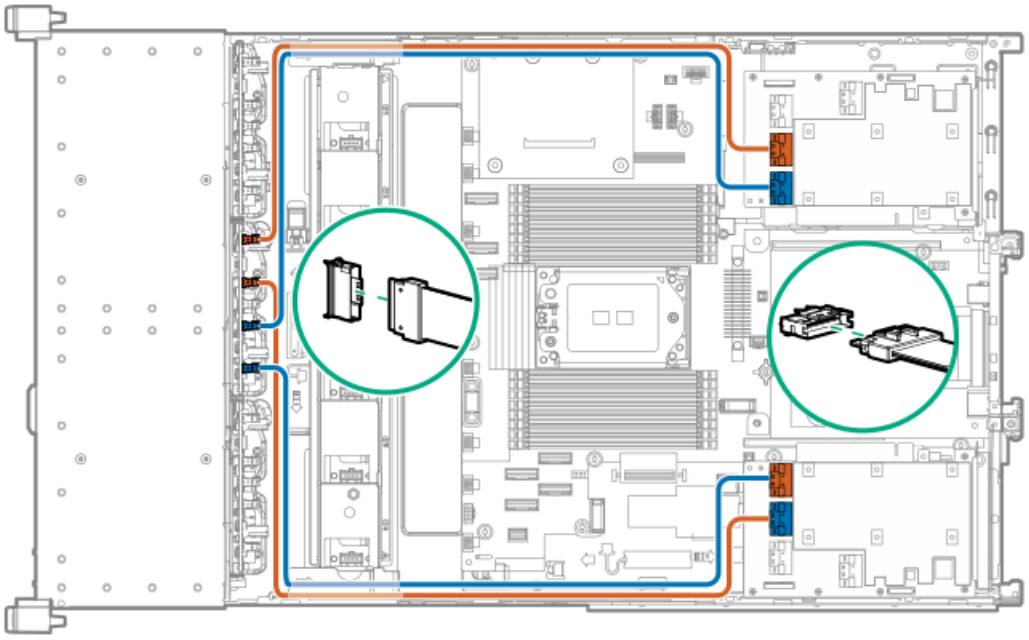

Item	Description
Orange	Box 2 port 1/2 to x16 port 1 or x32 port 3 controller in primary or secondary riser
Blue	Box 2 port 3/4 to x16 port 2 or x32 port 4 controller in primary or secondary riser

8 SFF NVMe x2 Box 1 Premium U.2/U.3 to x16 or x32 tri-mode controller in secondary riser cabling

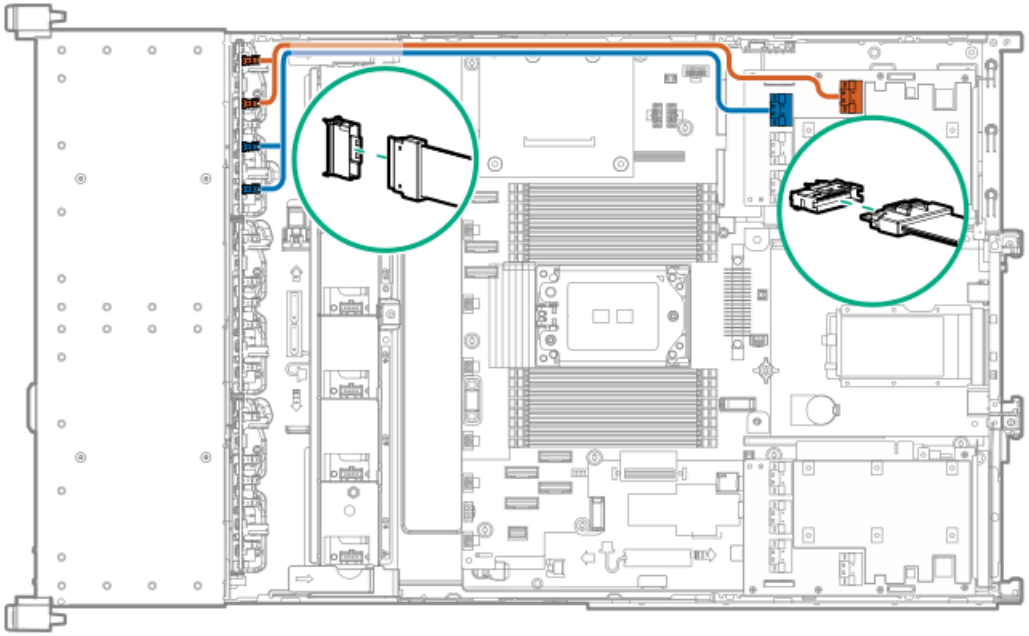

Item	Description
Orange	Box 1 port 1/2 to controller port 1
Blue	Box 1 port 3/4 to controller port 2

2 SFF SAS/SATA Box 4 to system board J1 (port 9A) cabling

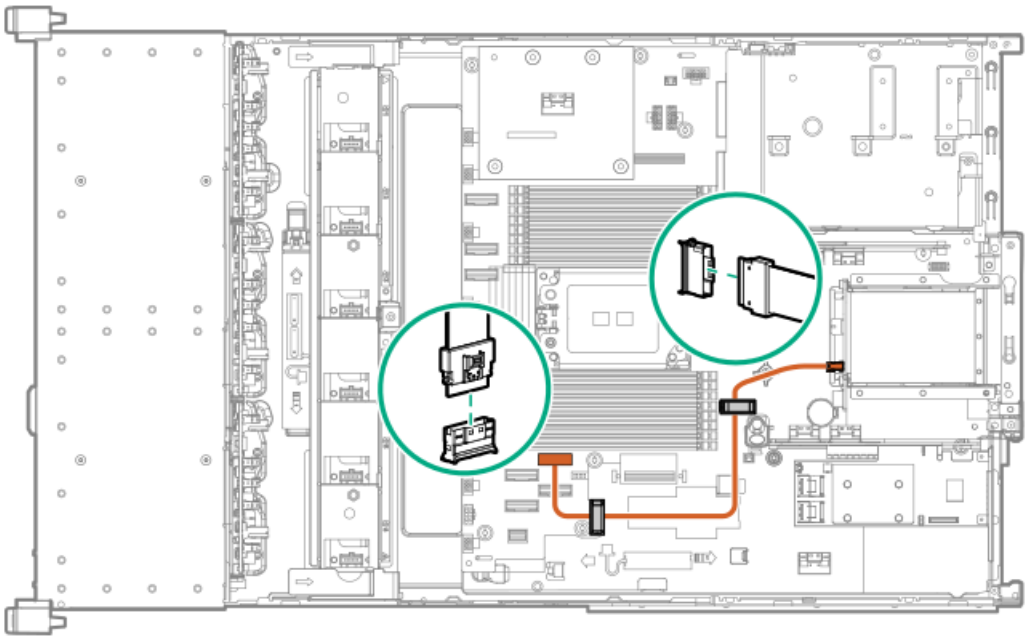

2 SFF SAS/SATA Box 4 to type-a controller cabling

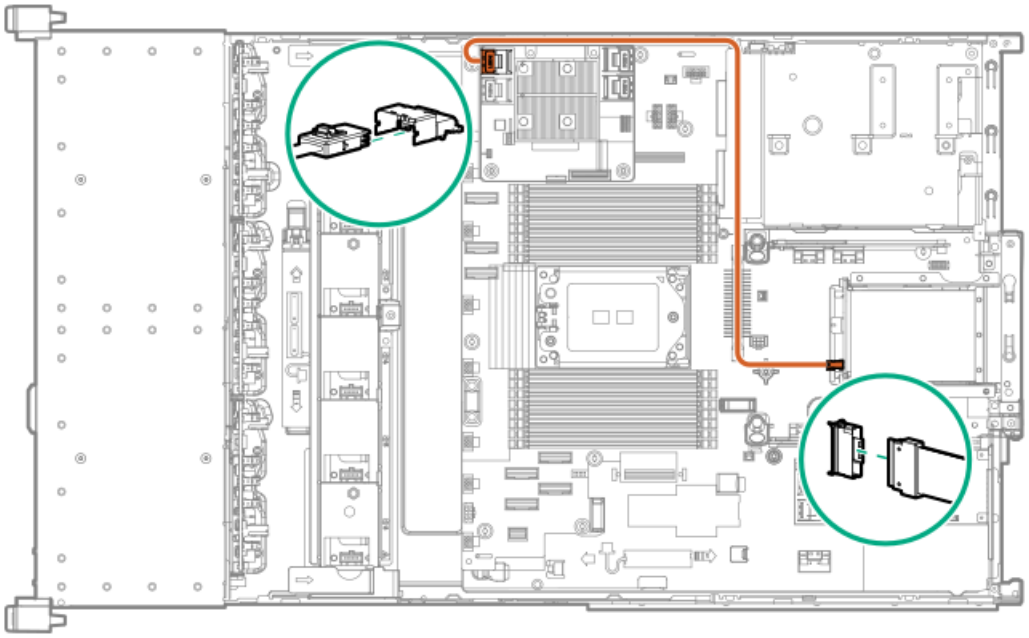

Description

Box 4 port 1 to controller port 1, 2, 3, or 4

2 SFF NVMe Box 4 to tri-mode controller cabling

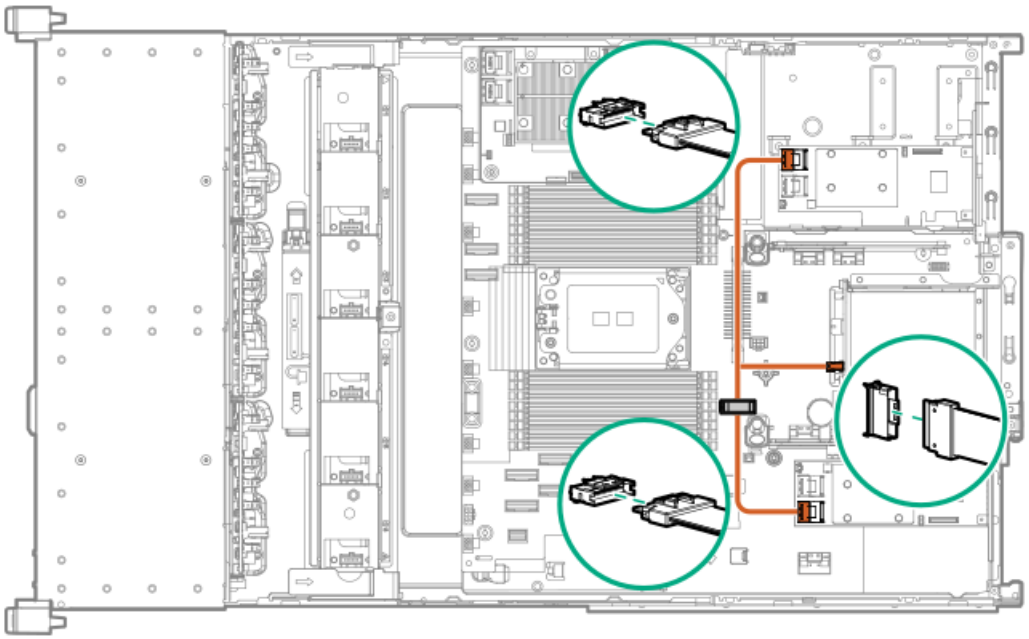

Description

Box 4 port 1 to x16 port 1 or x32 port 2 controller in primary or secondary riser

Energy pack cabling

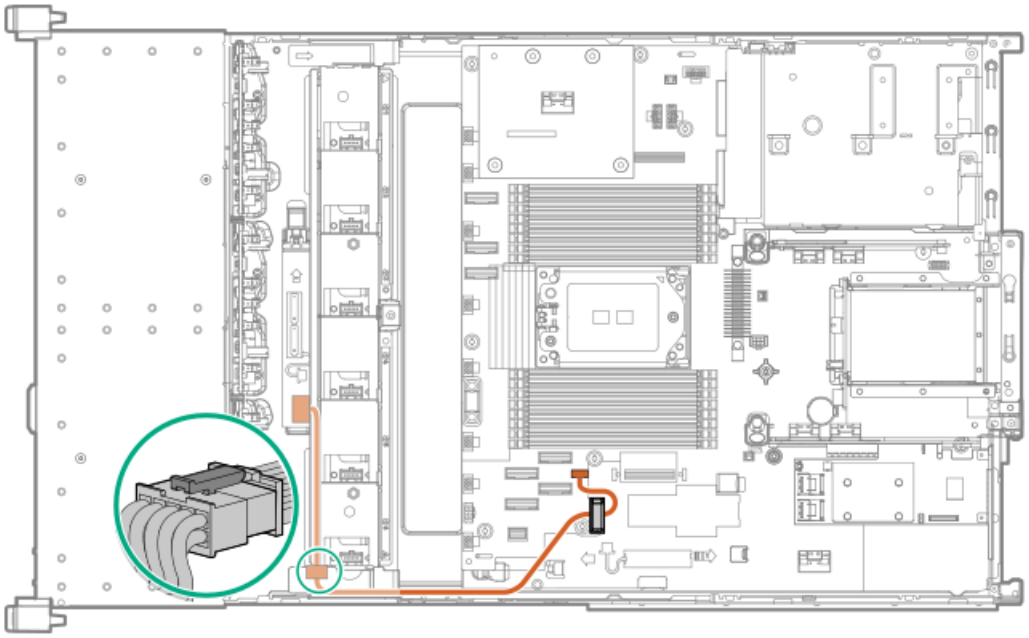

Storage controller backup power cabling

The exact route of the storage controller backup power cabling will depend on:

- The riser slot where the controller is installed.
- The location of the storage controller backup power connector on the controller.

Use the following diagrams for reference only.

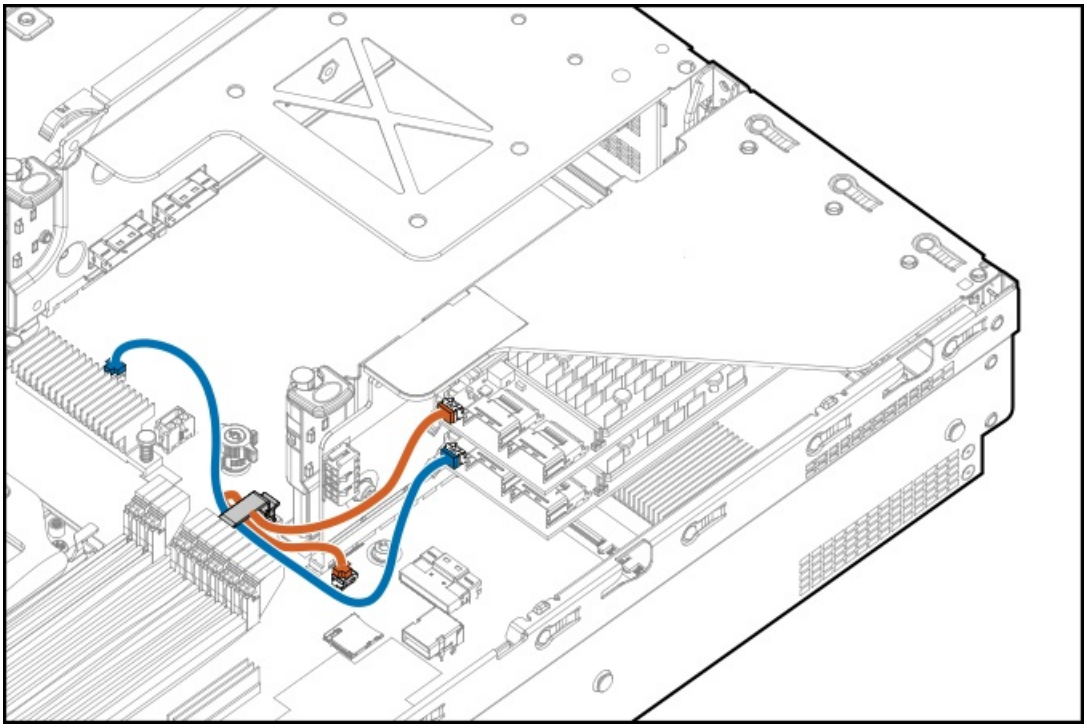

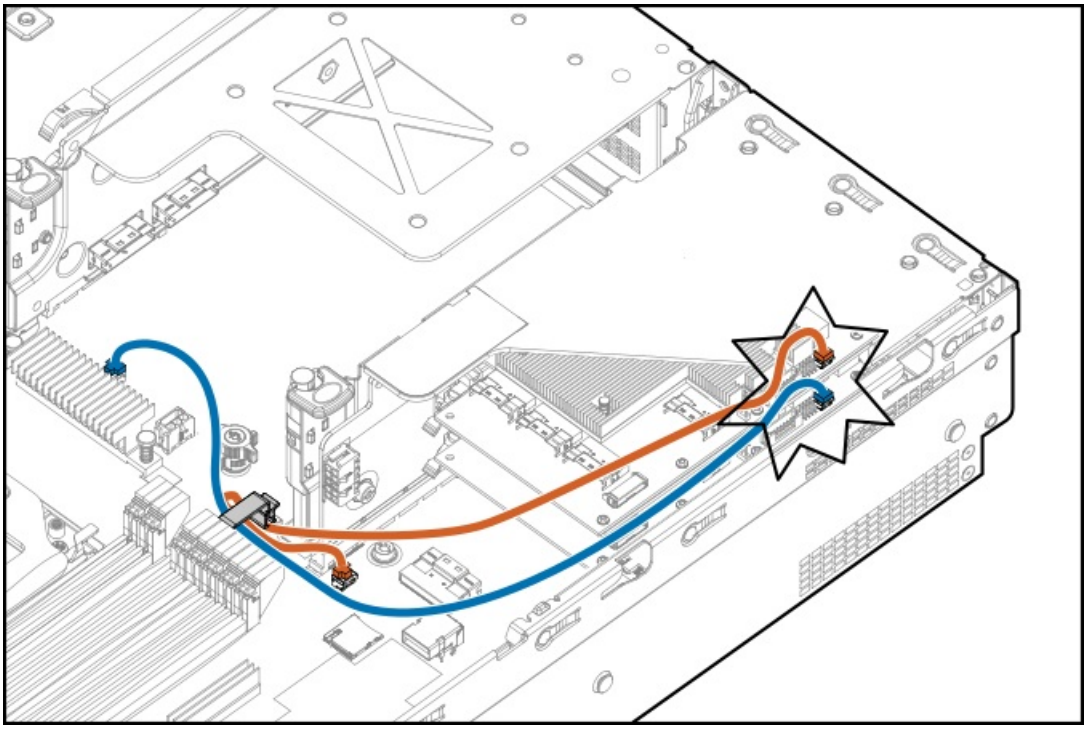

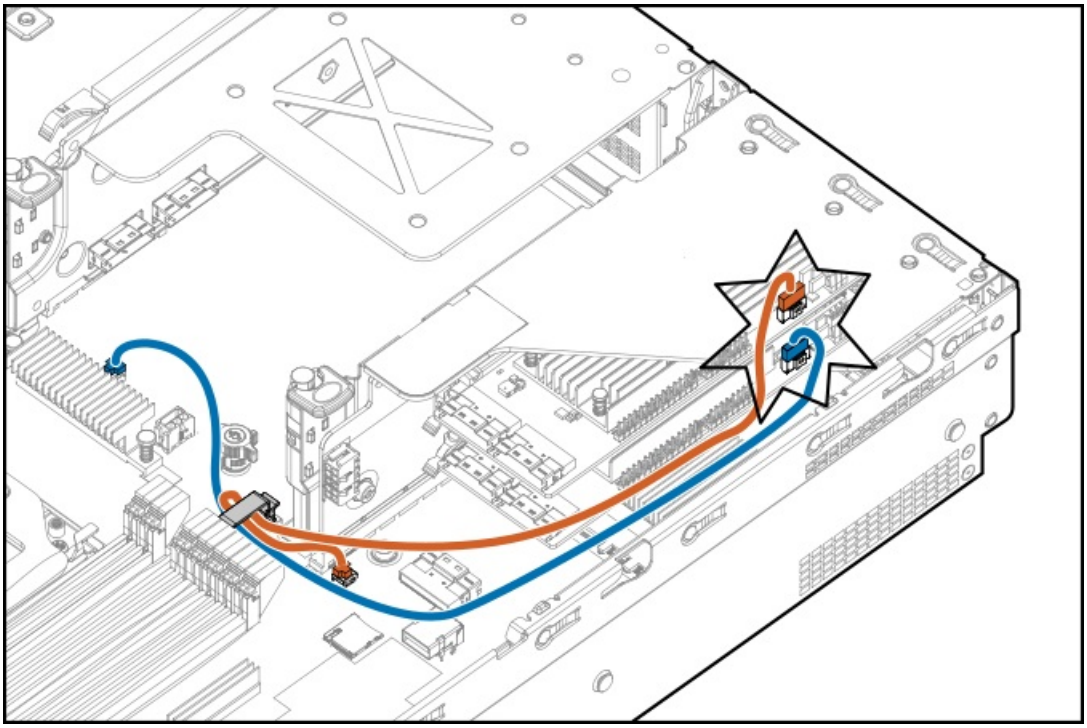

M.2 SATA SSD cabling

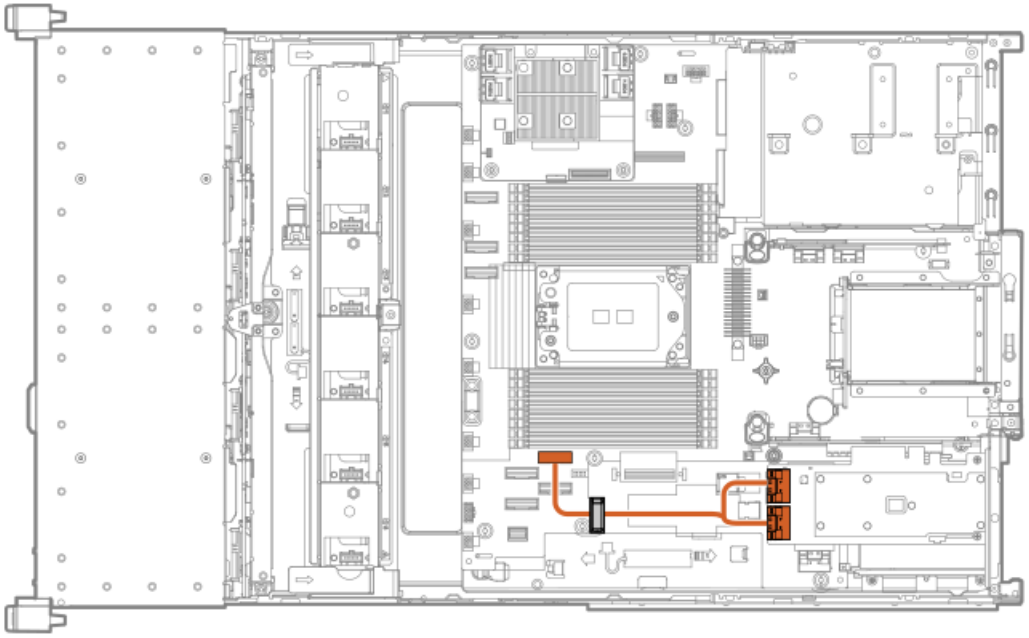

Accelerator or GPU power cabling

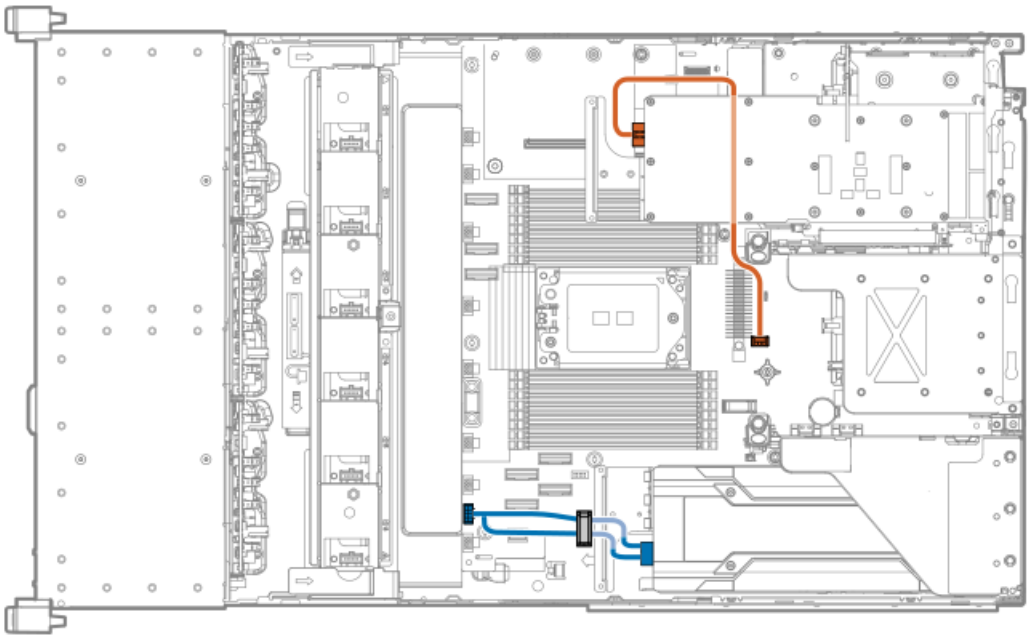

Item	Description
Orange	Low performance
Blue	High and low performance [1]

1 Y-cable to support 2 accelerators in primary riser cage

Fan cabling

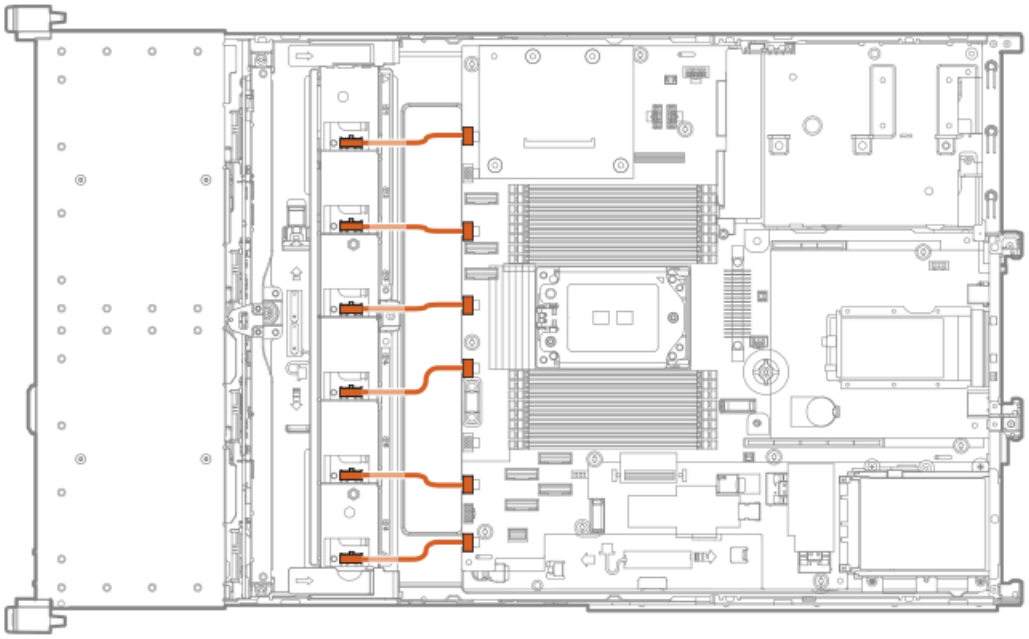

OCP bandwidth upgrade cabling

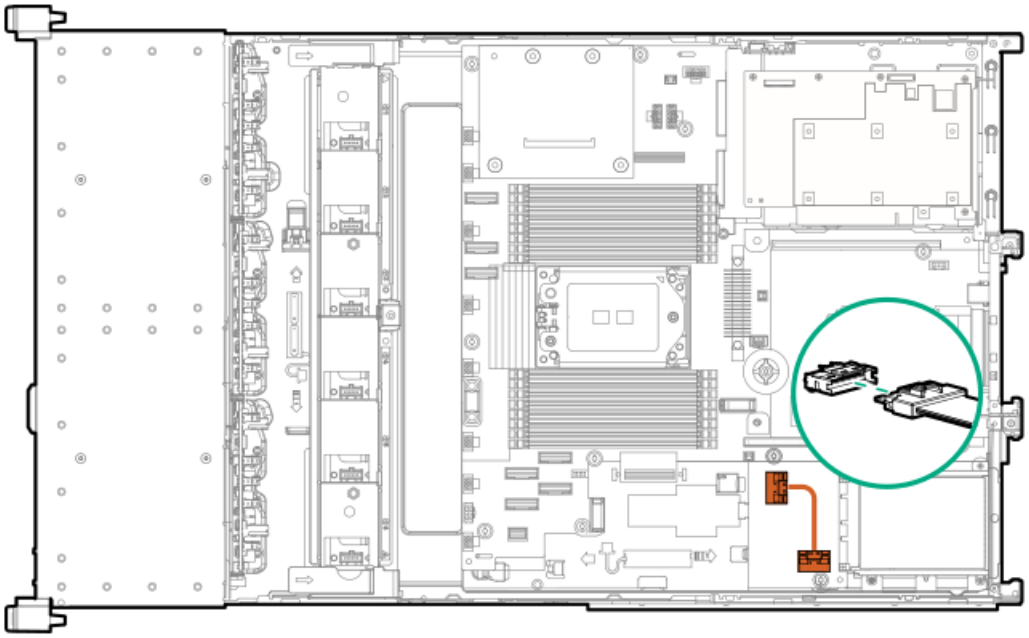

Serial port cabling

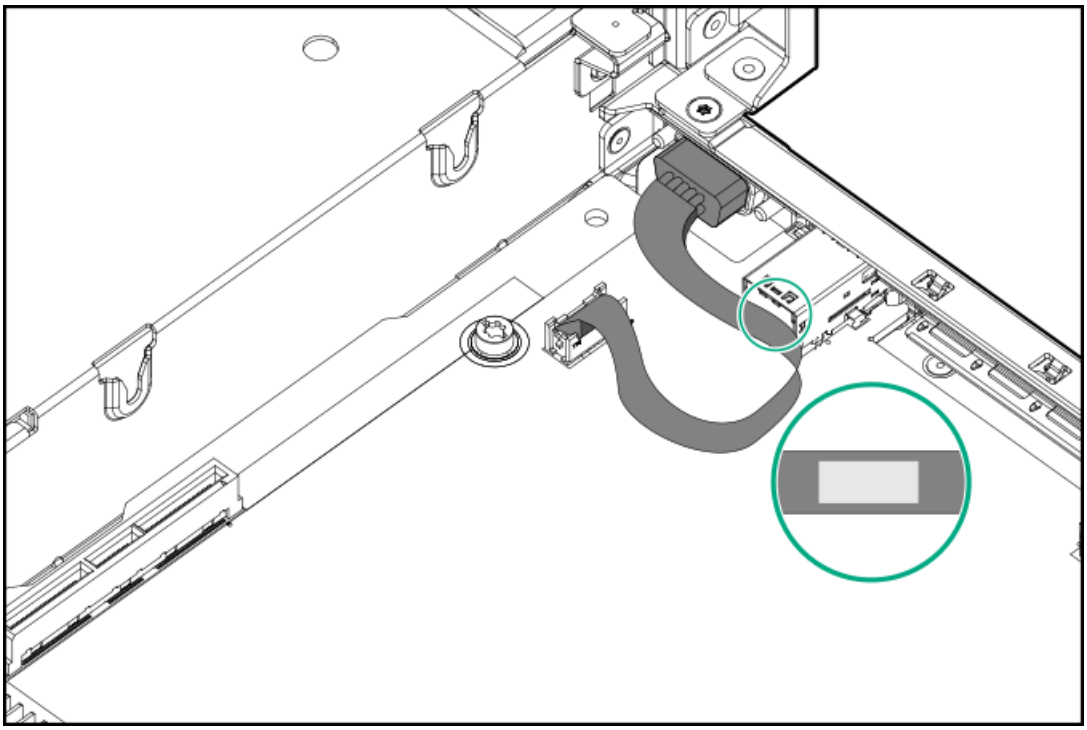

Chassis intrusion detection switch cabling

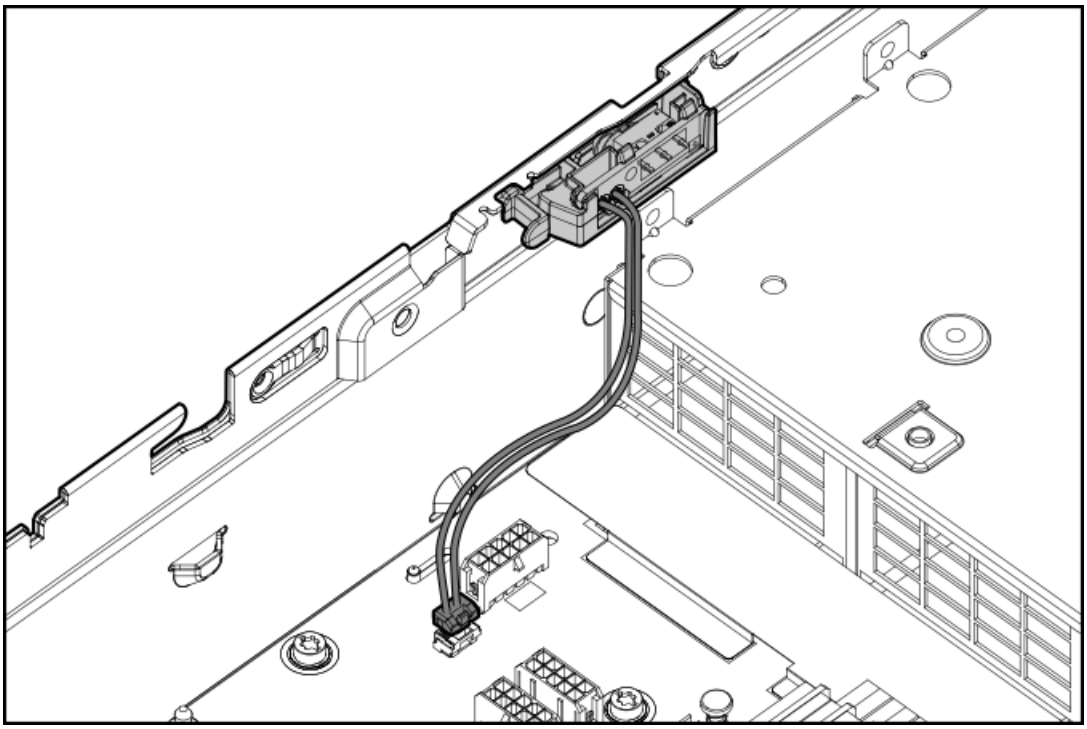

Front I/O cabling

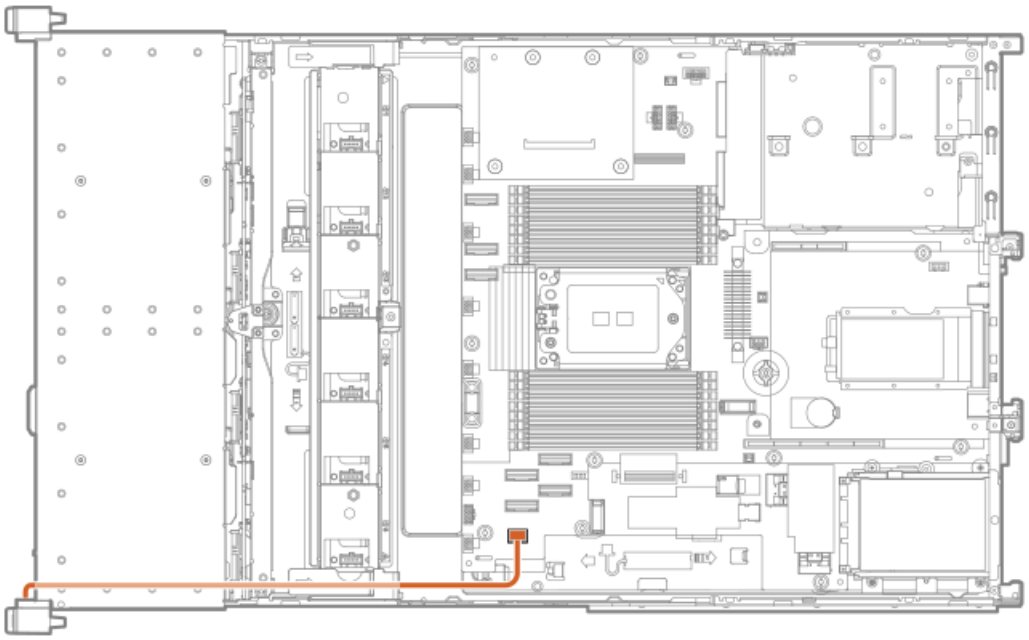

Software and configuration utilities

Subtopics

Server mode

Product QuickSpecs
Active Health System Viewer
HPE iLO 5
Integrated Management Log
Intelligent Provisioning
Management security
Scripting Toolkit for Windows and Linux
HPE Message Passing Interface
HPE Performance Cluster Manager
UEFI System Utilities
Smart Storage Administrator
HPE InfoSight for servers
USB support
Redundant ROM support
Keeping the system current

Server mode

The software and configuration utilities presented in this section operate in online mode, offline mode, or in both modes.

Software or configuration utility	Server mode
Active Health System	Online and Offline
HPE iLO 5	Online and Offline
Smart Storage Administrator	Online and Offline
iLO RESTful API	Online and Offline
Intelligent Provisioning	Online and Offline
Scripting Toolkit for Windows and Linux	Online
Service Pack for ProLiant	Online and Offline
Introduction to Smart Update Manager	Online and Offline
UEFI System Utilities	Offline

Product QuickSpecs

For more information about product features, specifications, options, configurations, and compatibility, see the product QuickSpecs on the Hewlett Packard Enterprise website (**https://www.hpe.com/info/qs**).

Active Health System Viewer

Active Health System Viewer (AHSV) is an online tool used to read, diagnose, and resolve server issues quickly using AHS uploaded data. AHSV provides Hewlett Packard Enterprise recommended repair actions based on experience and best practices. AHSV provides the ability to:

- Read server configuration information
- View Driver/Firmware inventory
- Review Event Logs
- Respond to Fault Detection Analytics alerts
- Open new and update existing support cases

Subtopics

Active Health System

Active Health System

The Active Health System monitors and records changes in the server hardware and system configuration.

The Active Health System provides:

- Continuous health monitoring of over 1600 system parameters
- Logging of all configuration changes
- Consolidated health and service alerts with precise time stamps
- Agentless monitoring that does not affect application performance

For more information about the Active Health System, see the iLO user guide at the following website: **https://www.hpe.com/support/ilo-docs**.

Subtopics

Active Health System data collection
Active Health System Log

Active Health System data collection

The Active Health System does not collect information about your operations, finances, customers, employees, or partners.

Examples of information that is collected:

- Server model and serial number
- Processor model and speed
- Storage capacity and speed
- Memory capacity and speed
- Firmware/BIOS and driver versions and settings

The Active Health System does not parse or change OS data from third-party error event log activities (for example, content created or passed through the OS).

Active Health System Log

The data collected by the Active Health System is stored in the Active Health System Log. The data is logged securely, isolated from the

operating system, and separate from customer data. Host resources are not consumed in the collection and logging of Active Health System data.

When the Active Health System Log is full, new data overwrites the oldest data in the log.

It takes less than 5 minutes to download the Active Health System Log and send it to a support professional to help you resolve an issue.

When you download and send Active Health System data to Hewlett Packard Enterprise, you agree to have the data used for analysis, technical resolution, and quality improvements. The data that is collected is managed according to the privacy statement, available at **https://www.hpe.com/info/privacy**.

You can upload the log to HPE InfoSight for Servers to view the log data or create a support case for servers under a valid warranty or support contract. For more information, see the HPE InfoSight for Servers documentation at the following website: **https://www.hpe.com/support/infosight-servers-docs**.

HPE iLO 5

iLO 5 is a remote server management processor embedded on the system boards of supported HPE servers and compute modules. iLO enables the monitoring and controlling of servers from remote locations. iLO management is a powerful tool that provides multiple ways to configure, update, monitor, and repair servers remotely.

For more information about iLO, see the iLO user guide at the following website: **https://www.hpe.com/support/ilo-docs**.

Subtopics

iLO Federation
iLO Service Port
iLO RESTful API
RESTful Interface Tool
iLO Amplifier Pack

iLO Federation

iLO Federation enables you to manage multiple servers from one system using the iLO web interface.

When configured for iLO Federation, iLO uses multicast discovery and peer-to-peer communication to enable communication between the systems in iLO Federation groups.

When you navigate to one of the iLO Federation pages, a data request is sent from the iLO system running the web interface to its peers, and from those peers to other peers until all data for the selected iLO Federation group is retrieved.

iLO supports the following features:

- Group health status—View server health and model information.
- Group virtual media—Connect URL-based media for access by a group of servers.
- Group power control—Manage the power status of a group of servers.
- Group power capping—Set dynamic power caps for a group of servers.
- Group firmware update—Update the firmware of a group of servers.
- Group license installation—Enter a license key to activate iLO licensed features on a group of servers.
- Group configuration—Add iLO Federation group memberships for multiple iLO systems.

Any user can view information on iLO Federation pages, but a license is required for using the following features: Group virtual media, Group power control, Group power capping, Group configuration, and Group firmware update.

For more information about iLO Federation, see the iLO user guide at the following website: **https://www.hpe.com/support/ilo-docs**.

iLO Service Port

The Service Port is a USB port with the label **iLO** on supported servers and compute modules.

To find out if your server or compute module supports this feature, see the server specifications document at the following website: **https://www.hpe.com/info/qs**.

When you have physical access to a server, you can use the Service Port to do the following:

- Download the Active Health System Log to a supported USB flash drive.

  When you use this feature, the connected USB flash drive is not accessible by the host operating system.

- Connect a client (such as a laptop) with a supported USB to Ethernet adapter to access the following:
  - iLO web interface
  - Remote console
  - iLO RESTful API
  - CLI

  Hewlett Packard Enterprise recommends the HPE USB to Ethernet Adapter (part number Q7Y55A).

  Some servers, such as the XL170r, require an adapter to connect a USB to Ethernet adapter to the iLO Service Port.

  Hewlett Packard Enterprise recommends the HPE Micro USB to USB Adapter (part number 789904-B21).

When you use the iLO Service Port:

- Actions are logged in the iLO event log.
- The server UID flashes to indicate the Service Port status.

  You can also retrieve the Service Port status by using a REST client and the iLO RESTful API.

- You cannot use the Service Port to boot any device within the server, or the server itself.
- You cannot access the server by connecting to the Service Port.
- You cannot access the connected device from the server.

For more information about the iLO Service Port, see the iLO user guide at the following website: **https://www.hpe.com/support/ilo-docs**.

iLO RESTful API

iLO includes the iLO RESTful API, which is Redfish API conformant. The iLO RESTful API is a management interface that server management tools can use to perform configuration, inventory, and monitoring tasks by sending basic HTTPS operations (GET, PUT, POST, DELETE, and PATCH) to the iLO web server.

To learn more about the iLO RESTful API, see the Hewlett Packard Enterprise website (**https://www.hpe.com/support/restfulinterface/docs**).

For specific information about automating tasks using the iLO RESTful API, see libraries and sample code at **https://www.hpe.com/info/redfish**.

For more information, watch the **Redfish & How it works with HPE Server Management** video.

RESTful Interface Tool

RESTful Interface Tool

The RESTful Interface Tool (iLOREST) is a scripting tool that allows you to automate HPE server management tasks. It provides a set of simplified commands that take advantage of the iLO RESTful API. You can install the tool on your computer for remote use or install it locally on a server with a Windows or Linux Operating System. The RESTful Interface Tool offers an interactive mode, a scriptable mode, and a file-based mode similar to CONREP to help decrease automation times.

For more information, see the following website: **https://www.hpe.com/info/resttool**.

iLO Amplifier Pack

iLO Amplifier Pack is an advanced server inventory, firmware and driver update solution that enables rapid discovery, detailed inventory reporting, firmware, and driver updates by leveraging iLO advanced functionality. iLO Amplifier Pack performs rapid server discovery and inventory for thousands of supported servers for the purpose of updating firmware and drivers at scale.

For more information about iLO Amplifier Pack, see the iLO Amplifier Pack User Guide at the following website: **https://www.hpe.com/support/ilo-ap-ug-en**.

Integrated Management Log

The IML records hundreds of events and stores them in an easy-to-view form. The IML timestamps each event with one-minute granularity.

You can view recorded events in the IML in several ways, including the following:

- From within HPE SIM
- From within the UEFI System Utilities
- From within the Embedded UEFI shell
- From within the iLO web interface

Intelligent Provisioning

Intelligent Provisioning is a single-server deployment tool embedded in ProLiant servers and HPE Synergy compute modules. Intelligent Provisioning simplifies server setup, providing a reliable and consistent way to deploy servers.

Intelligent Provisioning prepares the system for installing original, licensed vendor media and Hewlett Packard Enterprise-branded versions of OS software. Intelligent Provisioning also prepares the system to integrate optimized server support software from the Service Pack for ProLiant (SPP). SPP is a comprehensive systems software and firmware solution for ProLiant servers, server blades, their enclosures, and HPE Synergy compute modules. These components are preloaded with a basic set of firmware and OS components that are installed along with Intelligent Provisioning.

IMPORTANT

HPE ProLiant XL servers do not support operating system installation with Intelligent Provisioning, but they do support the maintenance features. For more information, see "Performing Maintenance" in the Intelligent Provisioning user guide and online help.

After the server is running, you can update the firmware to install additional components. You can also update any components that have been outdated since the server was manufactured.

To access Intelligent Provisioning:

- Press F10 from the POST screen and enter Intelligent Provisioning .
- From the iLO web interface using Lifecycle Management. Lifecycle Management allows you to access Intelligent Provisioning without

rebooting your server.

Management security

HPE ProLiant Gen10, HPE ProLiant Gen10 Plus, and HPE Apollo servers are built with some of the industry's most advanced security capabilities, out of the box, with a foundation of secure embedded management applications and firmware. The management security provided by HPE embedded management products enables secure support of modern workloads, protecting your components from unauthorized access and unapproved use. The range of embedded management and optional software and firmware available with the iLO Advanced license provides security features that help ensure protection, detection, and recovery from advanced cyber attacks. For more information, see the HPE Gen10 and Gen10 Plus Security Reference Guide at **Hewlett Packard Enterprise Support Center**.

Scripting Toolkit for Windows and Linux

The STK for Windows and Linux is a server deployment product that delivers an unattended automated installation for high-volume server deployments. The STK is designed to support ProLiant servers. The toolkit includes a modular set of utilities and important documentation that describes how to apply these tools to build an automated server deployment process.

The STK provides a flexible way to create standard server configuration scripts. These scripts are used to automate many of the manual steps in the server configuration process. This automated server configuration process cuts time from each deployment, making it possible to scale rapid, high-volume server deployments.

For more information or to download the STK, see the **Hewlett Packard Enterprise website**.

HPE Message Passing Interface

The HPE Message Passing Interface is an MPI development environment designed to enable the development and optimization of high performance computing (HPC) Linux applications. The HPE Message Passing Interface leverages a scalable MPI library and takes advantage of the underlying server infrastructure by boosting performance of existing MPI applications on Hewlett Packard Enterprise HPC clusters without requiring recompilation. For more information, see the HPE Message Passing Interface documentation on the Hewlett Packard Enterprise website (**https://www.hpe.com/software/mpi**).

HPE Performance Cluster Manager

HPE Performance Cluster Manager is a point of contact for the deployment, system management, monitoring, and reporting on the HPE cluster system. For more information, see the HPE Performance Cluster Manager documentation on the Hewlett Packard Enterprise website (**https://www.hpe.com/software/hpcm**).

UEFI System Utilities

The UEFI System Utilities is embedded in the system ROM. Its features enable you to perform a wide range of configuration activities, including:

- Configuring system devices and installed options.
- Enabling and disabling system features.

- Displaying system information.
- Selecting the primary boot controller or partition.
- Configuring memory options.
- Launching other preboot environments.

HPE servers with UEFI can provide:

- Support for boot partitions larger than 2.2 TB. Such configurations could previously only be used for boot drives when using RAID solutions.
- Secure Boot that enables the system firmware, option card firmware, operating systems, and software collaborate to enhance platform security.
- UEFI Graphical User Interface (GUI)
- An Embedded UEFI Shell that provides a preboot environment for running scripts and tools.
- Boot support for option cards that only support a UEFI option ROM.

Subtopics

Selecting the boot mode
Secure Boot
Launching the Embedded UEFI Shell

Selecting the boot mode

About this task

This server provides two Boot Mode configurations: UEFI Mode and Legacy BIOS Mode. Certain boot options require that you select a specific boot mode. By default, the boot mode is set to UEFI Mode. The system must boot in UEFI Mode to use certain options, including:

- Secure Boot, UEFI Optimized Boot, Generic USB Boot, IPv6 PXE Boot, iSCSI Boot, NVMe Boot and Boot from URL
- Fibre Channel/FCoE Scan Policy



NOTE

The boot mode you use must match the operating system installation. If not, changing the boot mode can impact the ability of the server to boot to the installed operating system.

Prerequisite

When booting to UEFI Mode, leave UEFI Optimized Boot enabled.

Procedure

1. From the System Utilities screen, select System Configuration > BIOS/Platform Configuration (RBSU) > Boot Options > Boot Mode.
2. Select a setting.
   - UEFI Mode (default)—Configures the system to boot to a UEFI compatible operating system.
   - Legacy BIOS Mode—Configures the system to boot to a traditional operating system in Legacy BIOS compatibility mode.
3. Save your setting.
4. Reboot the server.

Secure Boot

Secure Boot is a server security feature that is implemented in the BIOS and does not require special hardware. Secure Boot ensures that each component launched during the boot process is digitally signed and that the signature is validated against a set of trusted certificates embedded in the UEFI BIOS. Secure Boot validates the software identity of the following components in the boot process:

- UEFI drivers loaded from PCIe cards
- UEFI drivers loaded from mass storage devices
- Preboot UEFI Shell applications
- OS UEFI boot loaders

When Secure Boot is enabled:

- Firmware components and operating systems with boot loaders must have an appropriate digital signature to execute during the boot process.
- Operating systems must support Secure Boot and have an EFI boot loader signed with one of the authorized keys to boot. For more information about supported operating systems, see **https://www.hpe.com/servers/ossupport**.

You can customize the certificates embedded in the UEFI BIOS by adding or removing your own certificates, either from a management console directly attached to the server, or by remotely connecting to the server using the iLO Remote Console.

You can configure Secure Boot:

- Using the System Utilities options described in the following sections.
- Using the iLO RESTful API to clear and restore certificates. For more information, see the Hewlett Packard Enterprise website (**https://www.hpe.com/info/redfish**).
- Using the `secboot` command in the Embedded UEFI Shell to display Secure Boot databases, keys, and security reports.

Launching the Embedded UEFI Shell

Prerequisites

- Embedded UEFI Shell is set to Enabled.

About this task

Use the Embedded UEFI Shell option to launch the Embedded UEFI Shell. The Embedded UEFI Shell is a preboot command-line environment for scripting and running UEFI applications, including UEFI boot loaders. The Shell also provides CLI-based commands you can use to obtain system information, and to configure and update the system BIOS.

Procedure

1. From the System Utilities screen, select Embedded Applications > Embedded UEFI Shell.

   The Embedded UEFI Shell screen appears.

2. Press any key to acknowledge that you are physically present.

   This step ensures that certain features, such as disabling Secure Boot or managing the Secure Boot certificates using third-party UEFI tools, are not restricted.

3. If an administrator password is set, enter it at the prompt and press Enter.

   The `Shell>` prompt appears.

4. Enter the commands required to complete your task.

5. Enter the `exit` command to exit the Shell.

Smart Storage Administrator

SSA is the main tool for configuring arrays on these controllers. It exists in three interface formats: the SSA GUI, the SSA CLI, and SSA Scripting. All formats provide support for configuration tasks. Some of the advanced tasks are available in only one format.

The diagnostic features in SSA are also available in the standalone software Smart Storage Administrator Diagnostics Utility CLI.

- **Accessing SSA in the offline environment:** Using one of multiple methods, you can run SSA before launching the host operating system. In offline mode, users can configure or maintain detected and supported HPE ProLiant devices, such as optional controllers and integrated controllers. Some SSA features are only available in the offline environment, such as setting the boot controller or performing split-mirror operations.
- **Accessing SSA in the online environment:** This method requires an administrator to download the SSA executables and install them. You can run SSA online after launching the host operating system.

HPE InfoSight for servers

The HPE InfoSight portal is a secure web interface hosted by HPE that allows you to monitor supported devices through a graphical interface.

HPE InfoSight for servers:

- Combines the machine learning and predictive analytics of HPE InfoSight with the health and performance monitoring of Active Health System (AHS) and HPE iLO to optimize performance and predict and prevent problems
- Provides automatic collection and analysis of the sensor and telemetry data from AHS to derive insights from the behaviors of the install base to provide recommendations to resolve problems and improve performance

For more information on getting started and using HPE InfoSight for servers, go to: **https://www.hpe.com/info/infosight-servers-docs**.

USB support

Hewlett Packard Enterprise Gen10 and Gen10 Plus servers support all USB operating speeds depending on the device that is connected to the server.

Subtopics

External USB functionality

External USB functionality

Hewlett Packard Enterprise provides external USB support to enable local connection of USB devices for server administration, configuration, and diagnostic procedures.

For additional security, external USB functionality can be disabled through USB options in UEFI System Utilities.

Redundant ROM support

The server enables you to upgrade or configure the ROM safely with redundant ROM support. The server has a single ROM that acts as two separate ROM images. In the standard implementation, one side of the ROM contains the current ROM program version, while the other side of the ROM contains a backup version.

> **NOTE**
> The server ships with the same version programmed on each side of the ROM.

Subtopics

Safety and security benefits

Safety and security benefits

When you flash the system ROM, the flashing mechanism writes over the backup ROM and saves the current ROM as a backup, enabling you to switch easily to the alternate ROM version if the new ROM becomes corrupted for any reason. This feature protects the existing ROM version, even if you experience a power failure while flashing the ROM.

Keeping the system current

Subtopics

Updating firmware or system ROM
Drivers
Software and firmware
Operating system version support
HPE Pointnext Portfolio
Proactive notifications

Updating firmware or system ROM

About this task

To update firmware or system ROM, use one of the following methods:

- The Firmware Update option in the System Utilities.
- The `fwupdate` command in the Embedded UEFI Shell.
- Service Pack for ProLiant (SPP)
- HPE online flash components
- Moonshot Component Pack

Subtopics

Service Pack for ProLiant
Updating firmware from the System Utilities
Updating the firmware from the UEFI Embedded Shell
Online Flash components

Service Pack for ProLiant

SPP is a systems software and firmware solution delivered as a single ISO file download. This solution uses SUM as the deployment tool and is tested and supports HPE ProLiant, HPE BladeSystem, HPE Synergy, and HPE Apollo servers and infrastructure.

SPP, along with SUM and iSUT, provides Smart Update system maintenance tools that systematically update HPE ProLiant, HPE BladeSystem, HPE Synergy, and HPE Apollo servers and infrastructure.

SPP can be used in an online mode on a server running Windows, Linux, or VMware vSphere ESXi, or in an offline mode where the server is booted to an operating system included in the ISO file.

The preferred method for downloading an SPP is using the SPP Custom Download at **https://www.hpe.com/servers/spp/custom**.

Subtopics

Introduction to Smart Update Manager
Integrated Smart Update Tools

Introduction to Smart Update Manager

SUM is an innovative tool for maintaining and updating the firmware, drivers, and system software of HPE ProLiant, HPE BladeSystem, HPE Synergy, HPE Superdome Flex servers, and HPE Apollo servers, infrastructure, and associated options.

SUM identifies associated nodes you can update at the same time to avoid interdependency issues.

Key features of SUM include:

- Discovery engine that finds installed versions of hardware, firmware, and software on nodes.
- SUM deploys updates in the correct order and ensures that all dependencies are met before deploying an update.
- Interdependency checking.
- Automatic and step-by-step Localhost Guided Update process.
- Web browser-based user interface.
- Ability to create custom baselines and ISOs.
- Support for iLO Repository (Gen10 or later iLO 5 nodes only).
- Simultaneous firmware and software deployment for multiple remote nodes.
- Local offline firmware deployments with SPP deliverables.
- Extensive logging in all modes.

NOTE
Support for HPE Integrity servers has been discontinued from SUM 8.x.

Integrated Smart Update Tools

Integrated Smart Update Tools (iSUT) is the smart update solution for performing online firmware and driver updates. iSUT is used with iLO 4, iLO 5, and with update solutions (management appliances such as iLO Amplifier Pack or HPE OneView and Smart Update Manager (SUM) to stage, install, and activate firmware and driver updates.

The solution must be installed on the operating system, where it updates results through Rich Infrastructure Services (RIS) communication.

- **iSUT**: Polls iLO to check for requests from SUM, iLO Amplifier Pack, or HPE OneView for updates through local iLO using the iLO channel interface driver installed on the OS and orchestrates staging, deploying, and activating updates. You can adjust the polling interval by issuing the appropriate command-line option provided by iSUT. Performs inventory on target servers, stages deployment, deploys updates, and then reboots the servers.
- **iLO 5 with integrated Smart Update** (Gen10 or later servers only): Performs iLO Repository-based updates by downloading the components from iLO Repository when iLO Installation Queue has the components which can be updated by iSUT.
- **iLO Amplifier Pack and HPE OneView**: Displays available updates for servers. Communicates with iSUT (or SUT 1.x) to initiate updates using the iLO Redfish interface. iSUT reports the status of updates to iLO Amplifier Pack through iLO Restful Interface.
- **SUM**: A tool for firmware and driver maintenance for HPE ProLiant servers and associated options.



NOTE

SUM and iLO Amplifier Pack should not manage the same nodes.

Updating firmware from the System Utilities

About this task

Use the Firmware Updates option to update firmware components in the system, including the system BIOS, NICs, and storage cards.

Procedure

1. Access the System ROM Flash Binary component for your server from the Hewlett Packard Enterprise Support Center.
2. Copy the binary file to a USB media or iLO virtual media.
3. Attach the media to the server.
4. Launch the System Utilities, and select Embedded Applications > Firmware Update.
5. Select a device.

   The Firmware Updates screen lists details about your selected device, including the current firmware version in use.
6. Select Select Firmware File.
7. Select the flash file in the File Explorer list.

   The firmware file is loaded and the Firmware Updates screen lists details of the file in the Selected firmware file field.
8. Select Image Description, and then select a firmware image.

   A device can have multiple firmware images.
9. Select Start firmware update.

Updating the firmware from the UEFI Embedded Shell

Procedure

1. Access the System ROM Flash Binary component for your server from the Hewlett Packard Enterprise Support Center (**https://www.hpe.com/support/hpesc**).
2. Copy the binary file to a USB media or iLO virtual media.
3. Attach the media to the server.

4. Boot to the UEFI Embedded Shell.
5. To obtain the assigned file system volume for the USB key, enter `map -r`.
6. Change to the file system that contains the System ROM Flash Binary component for your server. Enter one of the `fsx` file systems available, such as `fs0:` or `fs1:`, and press **Enter**.
7. Use the `cd` command to change from the current directory to the directory that contains the binary file.
8. Flash the system ROM by entering `fwupdate -d BIOS -f filename`.
9. Reboot the server. A reboot is required after the firmware update in order for the updates to take effect and for hardware stability to be maintained.

Online Flash components

This component provides updated system firmware that can be installed directly on supported operating systems. Additionally, when used in conjunction with SUM, this Smart Component allows the user to update firmware on remote servers from a central location. This remote deployment capability eliminates the need for the user to be physically present at the server to perform a firmware update.

Drivers

IMPORTANT
Always perform a backup before installing or updating device drivers.

Update drivers using any of the following **Smart Update Solutions**:

- Download the latest Service Pack for ProLiant (includes Smart Update Manager)
- Create a custom SPP download
- Download Smart Update Manager for Linux
- Download specific drivers
  To locate the drivers for a server, go to the **Hewlett Packard Enterprise Support Center website**, and then search for the product name/number.

Software and firmware

Update software and firmware before using the server for the first time, unless any installed software or components require an older version.

For system software and firmware updates, use one of the following sources:

- Download the SPP from the Hewlett Packard Enterprise website (**https://www.hpe.com/servers/spp/download**).
- Download individual drivers, firmware, or other system software components from the server product page in the Hewlett Packard Enterprise Support Center website (**https://www.hpe.com/support/hpesc**).

Operating system version support

Operating system version support

For information about specific versions of a supported operating system, refer to the **operating system support matrix**.

HPE Pointnext Portfolio

HPE Pointnext delivers confidence, reduces risk, and helps customers realize agility and stability. Hewlett Packard Enterprise helps customers succeed through Hybrid IT by simplifying and enriching the on-premise experience, informed by public cloud qualities and attributes.

Operational Support Services enable you to choose the right service level, length of coverage, and response time to fit your business needs. For more information, see the Hewlett Packard Enterprise website:

https://www.hpe.com/us/en/services/operational.html

Utilize the Advisory and Transformation Services in the following areas:

- Private or hybrid cloud computing
- Big data and mobility requirements
- Improving data center infrastructure
- Better use of server, storage, and networking technology

For more information, see the Hewlett Packard Enterprise website:

https://www.hpe.com/services/consulting

Proactive notifications

30 to 60 days in advance, Hewlett Packard Enterprise sends notifications to subscribed customers on upcoming:

- Hardware, firmware, and software changes
- Bulletins
- Patches
- Security alerts

You can subscribe to proactive notifications on the **Hewlett Packard Enterprise website**.

Troubleshooting

Subtopics

NMI functionality
Troubleshooting resources

NMI functionality

An NMI crash dump enables administrators to create crash dump files when a system is hung and not responding to traditional debugging

methods.

An analysis of the crash dump log is an essential part of diagnosing reliability problems, such as hanging operating systems, device drivers, and applications. Many crashes freeze a system, and the only available action for administrators is to cycle the system power. Resetting the system erases any information that could support problem analysis, but the NMI feature preserves that information by performing a memory dump before a hard reset.

To force the OS to initiate the NMI handler and generate a crash dump log, the administrator can use the iLO Generate NMI feature.

Troubleshooting resources

Troubleshooting resources are available for HPE Gen10 and Gen10 Plus server products in the following documents:

- Troubleshooting Guide for HPE ProLiant Gen10 and Gen10 Plus servers provides procedures for resolving common problems and comprehensive courses of action for fault isolation and identification, issue resolution, and software maintenance.
- Integrated Management Log Messages and Troubleshooting Guide for HPE ProLiant Gen10 and Gen10 Plus servers and HPE Synergy provides IML messages and associated troubleshooting information to resolve critical and cautionary IML events.

To access troubleshooting resources for your product, see the **Hewlett Packard Enterprise website**.

System battery replacement

Subtopics

System battery information
Replace the system battery

System battery information

The server contains an internal lithium manganese dioxide, a vanadium pentoxide, or an alkaline battery that provides power to the real-time clock. If this battery is not properly handled, a risk of the fire and burns exists. To reduce the risk of personal injury:

- Do not attempt to recharge the battery.
- Do not expose the battery to temperatures higher than 60°C (140°F).
- Do not expose the battery to extremely low air pressure as it might lead to explosion or leakage of flammable liquid or gas.
- Do not disassemble, crush, puncture, short external contacts, or dispose the battery in fire or water.
- If the server no longer automatically displays the correct date and time, then replace the battery that provides power to the real-time clock. Under normal use, battery life is 5 to 10 years.

Replace the system battery

Procedure

1. Power down the server.

2. If installed, release the cable management arm.
3. Remove all power:
   a. Disconnect each power cord from the power source.
   b. Disconnect each power cord from the server.
4. Do one of the following:
   - Extend the server from the rack.
   - Remove the server from the rack.
5. Remove the access panel.
6. Remove the secondary riser cage.
7. Locate the battery on the system board.
8. Remove the system battery.

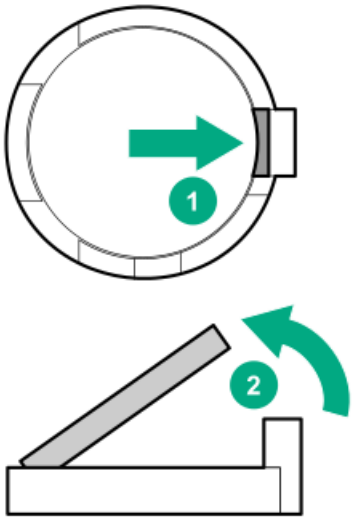

9. Insert the system battery with the "+" side facing up on the socket, and then press the battery down to secure it in place.

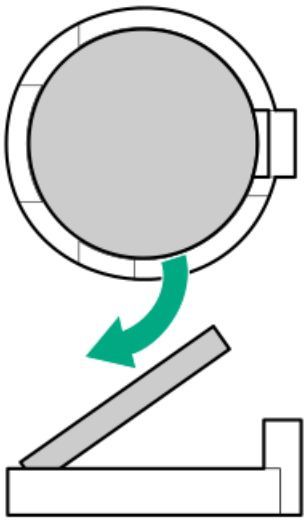

10. Install the secondary riser cage.
11. Install the access panel.
12. Install the server into the rack.
13. Connect each power cord to the server.
14. Connect each power cord to the power source.
15. Power up the server.

Results

For more information about battery replacement or proper disposal, contact an authorized reseller or an authorized service provider.

Safety, warranty, and regulatory information

Subtopics

Regulatory information
Warranty information

Regulatory information

To view the regulatory information for your product, view the Safety and Compliance Information for Server, Storage, Power, Networking, and Rack Products, available at the Hewlett Packard Enterprise Support Center:

https://www.hpe.com/support/Safety-Compliance-EnterpriseProducts

Additional regulatory information

Hewlett Packard Enterprise is committed to providing our customers with information about the chemical substances in our products as needed to comply with legal requirements such as REACH (Regulation EC No 1907/2006 of the European Parliament and the Council). A chemical information report for this product can be found at:

https://www.hpe.com/info/reach

For Hewlett Packard Enterprise product environmental and safety information and compliance data, including RoHS and REACH, see:

https://www.hpe.com/info/ecodata

For Hewlett Packard Enterprise environmental information, including company programs, product recycling, and energy efficiency, see:

https://www.hpe.com/info/environment

Subtopics

Notices for Eurasian Economic Union
Turkey RoHS material content declaration
Ukraine RoHS material content declaration

Notices for Eurasian Economic Union

EAC

Manufacturer and Local Representative Information

Manufacturer information:

Hewlett Packard Enterprise, 6280 America Center Drive, San Jose, CA 95002 U.S.

Local representative information Russian:

- **Russia**
  ООО "Хьюлетт Паккард Энтерпрайз", Российская Федерация, 125171, г. Москва, Ленинградское шоссе, 16А, стр.3, Телефон: +7 499 403 4248 Факс: +7 499 403 4677
- **Kazakhstan**
  ТОО «Хьюлетт-Паккард (К)», Республика Казахстан, 050040, г. Алматы, Бостандыкский район, проспект Аль-Фараби, 77/7, Телефон/факс: + 7 727 355 35 50

Local representative information Kazakh:

- **Russia**
  ЖШС "Хьюлетт Паккард Энтерпрайз", Ресей Федерациясы, 125171, Мәскеу, Ленинград тас жолы, 16А блок 3, Телефон: +7 499 403 4248 Факс: +7 499 403 4677
- **Kazakhstan**
  ЖШС «Хьюлетт-Паккард (К)», Қазақстан Республикасы, 050040, Алматы к., Бостандык ауданы, Әл-Фараби даңғ ылы, 77/7, Телефон/факс: +7 727 355 35 50

Manufacturing date:

The manufacturing date is defined by the serial number.

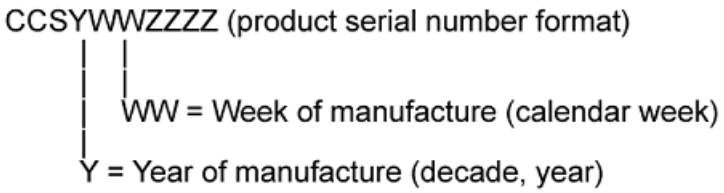

If you need help identifying the manufacturing date, contact **tre@hpe.com**.

Turkey RoHS material content declaration

Türkiye Cumhuriyeti: AEEE Yönetmeliğine Uygundur

Ukraine RoHS material content declaration

Обладнання відповідає вимогам Технічного регламенту щодо обмеження використання деяких небезпечних речовин в електричному та електронному обладнанні, затвердженого постановою Кабінету Міністрів України від 3 грудня 2008 № 1057

Warranty information

To view the warranty information for your product, see the links provided below:

HPE ProLiant and IA-32 Servers and Options

https://www.hpe.com/support/ProLiantServers-Warranties

HPE Enterprise and Cloudline Servers

https://www.hpe.com/support/EnterpriseServers-Warranties

HPE Storage Products

https://www.hpe.com/support/Storage-Warranties

HPE Networking Products

https://www.hpe.com/support/Networking-Warranties

Specifications

Subtopics

Environmental specifications

Limited ambient temperature limitation for specific drive configurations

Mechanical specifications

Power supply specifications

Environmental specifications

The environmental specifications in this chapter are valid when installing the server in an indoor commercial enclosure environment.

Specifications	Value
Temperature range*	—
Operating	10°C to 35°C (50°F to 95°F)
Nonoperating	-30°C to 60°C (-22°F to 140°F)
Relative humidity (noncondensing)	—
Operating	8% to 90% 28°C (82.4°F) maximum wet bulb temperature, noncondensing
Nonoperating	5% to 95% 38.7°C (101.7°F) maximum wet bulb temperature, noncondensing
Altitude	—
Operating	3,050 m (10,000 ft) This value may be limited by the type and number of options installed. Maximum allowable altitude change rate is 457 m/min (1,500 ft/min).
Nonoperating	9,144 m (30,000 ft) Maximum allowable altitude change rate is 457 m/min (1,500 ft/min).

Standard operating support

10° to 35°C (50° to 95°F) at sea level with an altitude derating of 1.0°C per every 305 m (1.8°F per every 1,000 ft) above sea level to a maximum of 3,050 m (10,000 ft), no direct sustained sunlight. Maximum rate of change is 20°C/hr (36°F/hr). The upper limit and rate of change may be limited by the type and number of options installed.

System performance during standard operating support might be reduced if operating with a fan fault or above 30°C (86°F).

Extended ambient operating support

For approved hardware configurations, the supported system inlet range is extended to be: 5° to 10°C (41° to 50°F) and 35° to 40°C (95° to 104°F) at sea level with an altitude derating of 1.0°C per every 175 m (1.8°F per every 574 ft) above 900 m (2,953 ft) to a maximum of 3,050 m (10,000 ft). The approved hardware configurations for this system are listed at the **Hewlett Packard Enterprise website**.

40°C to 45°C (104°F to 113°F) at sea level with an altitude derating of 1.0°C per every 125 m (1.8°F per every 410 ft) above 900 m (2,953 ft) to a maximum of 3,050 m (10,000 ft). The approved hardware configurations for this system are listed on the **Hewlett Packard Enterprise website**.

System performance might be reduced if operating in the extended ambient operating range or with a fan fault.

Limited ambient temperature limitation for specific drive configurations

When either hardware option is installed, observe the following ambient temperature values:

- 280 W processor: 25°C (77°F)
- Rear 2 SFF NVMe drive: 30°C (86°F)

The above temperature values require the high-performance fans to be installed.

Mechanical specifications

Specification	Value
Height	8.75 cm (3.46 in)
Depth, SFF	71.36 cm (28.09 in)
Depth, LFF	75.08 cm (29.56 in)
Width	44.54 cm (17.54 in)
Weight, SFF minimum	11.66 kg (25.71 lb)
Weight, SFF maximum	24.20 kg (53.35 lb)
Weight, LFF minimum	12.57 kg (27.71 lb)
Weight, LFF maximum	26.28 kg (57.94 lb)

Power supply specifications

Depending on the installed options and the regional location where the server was purchased, the server can be configured with one of the following power supplies:

- HPE 500 W Flex Slot Platinum Hot-plug Low Halogen Power Supply
- HPE 800 W Flex Slot Platinum Hot-plug Low Halogen Power Supply
- HPE 800 W Flex Slot Titanium Hot-plug Low Halogen Power Supply
- HPE 800 W Flex Slot Universal Hot-plug Low Halogen Power Supply
- HPE 800 W Flex Slot -48 VDC Hot-plug Low Halogen Power Supply
- HPE 1600 W Flex Slot Platinum Hot-plug Low Halogen Power Supply
- HPE 1600 W Flex Slot -48 VDC Hot-plug Power Supply

For detailed power supply specifications, see the QuickSpecs on the **Hewlett Packard Enterprise website**.

CAUTION

Mixing different types of power supplies in the same server might:

- Limit or disable some power supply features including support for power redundancy.
- Cause the system to become unstable and might shut down.

To ensure access to all available features, all power supplies in the same server should have the same output and efficiency ratings. Verify that all power supplies have the same part number and label color.

Subtopics

HPE 500 W Flex Slot Platinum Hot-plug Low Halogen Power Supply
HPE 800 W Flex Slot Platinum Hot-plug Low Halogen Power Supply
HPE 800 W Flex Slot Titanium Hot-plug Low Halogen Power Supply
HPE 800 W Flex Slot Universal Hot-plug Low Halogen Power Supply
HPE 800 W Flex Slot -48 VDC Hot-plug Low Halogen Power Supply
HPE 1600 W Flex Slot Platinum Hot-plug Low Halogen Power Supply
HPE 1600 W Flex Slot -48 VDC Hot-plug Power Supply

HPE 500 W Flex Slot Platinum Hot-plug Low Halogen Power Supply

Specification	Value
Input requirements	—
Rated input voltage	100 VAC to 240 VAC 240 VDC for China only
Rated input frequency	50 Hz to 60 Hz Not applicable to 240 VDC
Rated input current	5.6 A at 100 VAC 2.7 A at 200 VAC 2.3 A at 240 VDC for China only
Maximum rated input power	557 W at 100 VAC 539 W at 200 VAC 537 W at 240 VDC for China only
BTUs per hour	1902 at 100 VAC 1840 at 200 VAC 1832 at 240 VDC for China only
Power supply output	—
Rated steady-state power	500 W at 100 VAC to 127 VAC input 500 W at 100 VAC to 240 VAC input 500 W at 240 VDC input for China only
Maximum peak power	500 W at 100 VAC to 127 VAC input 500 W at 100 VAC to 240 VAC input 500 W at 240 VDC input for China only

HPE 800 W Flex Slot Platinum Hot-plug Low Halogen Power Supply

Specification	Value
Input requirements	—
Rated input voltage	100 VAC to 127 VAC 200 VAC to 240 VAC 240 VDC for China only
Rated input frequency	50 Hz to 60 Hz Not applicable to 240 VDC
Rated input current	9.1 A at 100 VAC 4.4 A at 200 VAC 3.6 A at 240 VDC for China only
Maximum rated input power	899 W at 100 VAC 867 W at 200 VAC 864 W at 240 VDC for China only
BTUs per hour	3067 at 100 VAC 2958 at 200 VAC 2949 at 240 VAC for China only
Power supply output	—
Rated steady-state power	800 W at 100 VAC to 127 VAC input 800 W at 100 VAC to 240 VAC input 800 W at 240 VDC input for China only
Maximum peak power	800 W at 100 VAC to 127 VAC input 800 W at 100 VAC to 240 VAC input 800 W at 240 VDC input for China only

HPE 800 W Flex Slot Titanium Hot-plug Low Halogen Power Supply

Specification	Value
Input requirements	—
Rated input voltage	200 VAC to 240 VAC 240 VDC for China only
Rated input frequency	50 Hz to 60 Hz Not applicable to 240 VDC
Rated input current	4.3 A at 200 VAC 3.6 A at 240 VAC 3.6 A at 240 VDC for China only
Maximum rated input power	851 W at 200 VAC 848 W at 240 VAC 848 W at 240 VDC for China only
BTUs per hour	2905 at 200 VAC 2893 at 240 VAC 2893 at 240 VDC for China only
Power supply output	—
Rated steady-state power	800 W at 200 VAC to 240 VAC input 800 W at 240 VDC input for China only
Maximum peak power	800 W at 200 VAC to 240 VAC input 800 W at 240 VDC input for China only

HPE 800 W Flex Slot Universal Hot-plug Low Halogen Power Supply

Specification	Value
Input requirements	—
Rated input voltage	200 VAC to 277 VAC 380 VDC
Rated input frequency	50 Hz to 60 Hz
Rated input current	4.4 A at 200 VAC 3.8 A at 230 VAC 2.3 A at 380 VDC
Maximum rated input power	869 W at 200 VAC 865 W at 230 VAC 861 W at 277 VAC 863 W at 380 VDC
BTUs per hour	2964 at 200 VAC 2951 at 230 VAC 2936 at 277 VAC 2943 at 380 VDC
Power supply output	—
Rated steady-state power	800 W at 200 VAC to 277 VAC input
Maximum peak power	800 W at 200 VAC to 277 VAC input

HPE 800 W Flex Slot -48 VDC Hot-plug Low Halogen Power Supply

Specification	Value
Input requirements	—
Rated input voltage	-40 VDC to -72 VDC -48 VDC nominal input
Rated input current	22.1 A at -40 VDC input 18.2 A at -48 VDC input, nominal input 12.0 A at -72 VDC input
Rated input power (W)	874 W at -40 VDC input 865 W at -48 VDC input, nominal input 854 W at -72 VDC input
Rated input power (BTUs per hour)	2983 at -40 VDC input 2951 at -48 VDC input, nominal input 2912 at -72 VDC input
Power supply output	—
Rated steady-state power (W)	800 W at -40 VDC to -72 VDC
Maximum peak power (W)	800 W at -40 VDC to -72 VDC
Maximum peak power	800 W at -40 VDC to -72 VDC input

WARNING

To reduce the risk of electric shock or energy hazards:

- This equipment must be installed by trained service personnel.
- Connect the equipment to a reliably grounded secondary circuit source. A secondary circuit has no direct connection to a primary circuit and derives its power from a transformer, converter, or equivalent isolation device.
- The branch circuit overcurrent protection must be rated 27 A.

CAUTION

This equipment is designed to permit the connection of the earthed conductor of the DC supply circuit to the earthing conductor at the equipment.

If this connection is made, all of the following must be met:

- This equipment must be connected directly to the DC supply system earthing electrode conductor or to a bonding jumper from an earthing terminal bar or bus to which the DC supply system earthing electrode conductor is connected.
- This equipment must be located in the same immediate area (such as adjacent cabinets) as any other equipment that has a connection between the earthed conductor of the same DC supply circuit and the earthing conductor, and also the point of earthing of the DC system. The DC system must be earthed elsewhere.
- The DC supply source is to be located within the same premises as the equipment.
- Switching or disconnecting devices must not be in the earthed circuit conductor between the DC source and the point of connection of the earthing electrode conductor.

HPE 1600 W Flex Slot Platinum Hot-plug Low Halogen Power Supply

Specification	Value
Input requirements	—
Rated input voltage	200 VAC to 240 VAC 240 VDC for China only
Rated input frequency	50 Hz to 60 Hz
Rated input current	8.7 A at 200 VAC 7.5 A at 230 VAC
Maximum rated input power	1734 W at 200 VAC 1727 W at 230 VAC
BTUs per hour	5918 at 200 VAC 5891 at 230 VAC
Power supply output	—
Rated steady-state power	1600 W at 200 VAC to 240 VAC input 1600 W at 240 VDC input
Maximum peak power	2200 W for 1 ms (turbo mode) at 200 VAC to 240 VAC input

HPE 1600 W Flex Slot -48 VDC Hot-plug Power Supply

Specification	Value
Input requirements	—
Rated input voltage	-40 VDC to -72 VDC
Rated input frequency	DC
Nominal input current	44.2 A DC at -40 VDC input 36.6 A DC at -48 VDC input 24.4 A DC at -72 VDC input
Maximum Rated Input Wattage Rating	1766 W at -40 VDC input 1758 W at -48 VDC input 1755 W at -72 VDC input
BTUs per hour	6026 at -40 VDC input 6000 at -48 VDC input input 5989 at -72 VDC input
Power supply output	—
Rated steady-state power	1600 W at -40 VDC to -72 VDC
Maximum peak power	1600 W at -40 VDC to -72 VDC

Websites

General websites

Single Point of Connectivity Knowledge (SPOCK) Storage compatibility matrix

https://www.hpe.com/storage/spock

Storage white papers and analyst reports

https://www.hpe.com/storage/whitepapers

For additional websites, see Support and other resources.

Product websites

HPE ProLiant DL345 Gen10 Plus Server product page

https://www.hpe.com/servers/dl345-gen10-plus

HPE ProLiant DL345 Gen10 Plus Server user documents

https://www.hpe.com/info/dl345gen10plus-docs

Support and other resources

Subtopics

Accessing Hewlett Packard Enterprise Support
Accessing updates
Customer self repair
Remote support
Documentation feedback

Accessing Hewlett Packard Enterprise Support

- For live assistance, go to the Contact Hewlett Packard Enterprise Worldwide website:

  https://www.hpe.com/info/assistance

- To access documentation and support services, go to the Hewlett Packard Enterprise Support Center website:

  https://www.hpe.com/support/hpesc

Information to collect

- Technical support registration number (if applicable)
- Product name, model or version, and serial number
- Operating system name and version
- Firmware version
- Error messages
- Product-specific reports and logs
- Add-on products or components

- Third-party products or components

Accessing updates

- Some software products provide a mechanism for accessing software updates through the product interface. Review your product documentation to identify the recommended software update method.
- To download product updates:

  Hewlett Packard Enterprise Support Center

  https://www.hpe.com/support/hpesc

  Hewlett Packard Enterprise Support Center: Software downloads

  https://www.hpe.com/support/downloads

  My HPE Software Center

  https://www.hpe.com/software/hpesoftwarecenter
- To subscribe to eNewsletters and alerts:

  https://www.hpe.com/support/e-updates
- To view and update your entitlements, and to link your contracts and warranties with your profile, go to the Hewlett Packard Enterprise Support Center More Information on Access to Support Materials page:

  https://www.hpe.com/support/AccessToSupportMaterials

> **IMPORTANT**
>
> Access to some updates might require product entitlement when accessed through the Hewlett Packard Enterprise Support Center. You must have an HPE Passport set up with relevant entitlements.

Customer self repair

Hewlett Packard Enterprise customer self repair (CSR) programs allow you to repair your product. If a CSR part needs to be replaced, it will be shipped directly to you so that you can install it at your convenience. Some parts do not qualify for CSR. Your Hewlett Packard Enterprise authorized service provider will determine whether a repair can be accomplished by CSR.

For more information about CSR, contact your local service provider.

Remote support

Remote support is available with supported devices as part of your warranty or contractual support agreement. It provides intelligent event diagnosis, and automatic, secure submission of hardware event notifications to Hewlett Packard Enterprise, which initiates a fast and accurate resolution based on the service level of your product. Hewlett Packard Enterprise strongly recommends that you register your device for remote support.

If your product includes additional remote support details, use search to locate that information.

HPE Get Connected

https://www.hpe.com/services/getconnected

HPE Pointnext Tech Care

https://www.hpe.com/services/techcare

HPE Datacenter Care

https://www.hpe.com/services/datacentercare

Documentation feedback

Hewlett Packard Enterprise is committed to providing documentation that meets your needs. To help us improve the documentation, use the Feedback button and icons (located at the bottom of an opened document) on the Hewlett Packard Enterprise Support Center portal (**https://www.hpe.com/support/hpesc**) to send any errors, suggestions, or comments. All document information is captured by the process.