Liebert® PSI5

120V Input / 120V Output & 208V Input / 208V Output
Installer/User Guide

Technical Support Site

If you encounter any installation or operational issues with your product, check the pertinent section of this manual to see if the issue can be resolved by following outlined procedures.

Visit https://www.vertiv.com/en-us/support/ for additional assistance.

Table of Contents

Important Safety Information

IMPORTANT! This manual contains important safety instructions that must be followed during the installation and maintenance of the UPS and batteries. Read this manual thoroughly and the safety and regulatory information, available at https://www.vertiv.com/ComplianceRegulatoryInfo, before attempting to install, connect to supply, or operate this UPS.

This page is intentionally left blank.

1 PSI5 Description

The Liebert® PSI5 is a line-interactive UPS designed for IT applications such as network closets and small data centers. It is available in 1U, 2U, and MT (mini tower) form factors. It provides reliable power protection for servers, critical nodes, network work stations, large network peripherals, network routers, bridges, hubs and other electronic equipment. Matching battery cabinets are available to extend the on-battery operating time for VRLA (valve regulated lead acid) 2U models. The optional Liebert® Network Communication Card makes advanced monitoring and control available.

1.1 Available Models

Table 1-1 PSI5 Models

BATTERY TYPE	MODEL FORM FACTOR	MODEL NUMBER	NOMINAL POWER RATING (120V INPUT)
VRLA (Valve Regulated Lead Acid)	2U	PSI5-800RT120	800 VA / 720 W
		PSI5-1100RT120	1100 VA / 990 W
		PSI5-1500RT120	1500 VA / 1350 W
		PSI5-1500RT120TAA	
		PSI5-2200RT120	1920 VA / 1920 W
		PSI5-2200RT120TAA	
		PSI5-3000RT120	3000 VA / 2700 W
		PSI5-3000RT120TAA	
		PSI5-5000RT208	5000 VA / 4500 W
	1U	PSI5-1000RM1201U	1000 VA / 900 W
		PSI5-1500RM1201U	1440 VA / 1350 W
	Mini Tower	PSI5-750MT120	750 VA / 675 W
		PSI5-1100MT120	1100 VA / 990 W
		PSI5-1500MT120	1440 VA / 1350 W
LI (Lithium Ion)	2U	PSI5-1500RT120LI	1500 VA / 1350 W
		PSI5-2200RT120LI	1920 VA / 1920 W
		PSI5-3000RT120LI	3000 VA / 2700 W
	Mini Tower	PSI5-1500MT120LI	1500 VA / 1350 W

1.2 Rear Panels Views

Figure 1-1 Liebert® PSI5-800/1100/1500RT120, PSI5-1500RT120TAA & PSI5-1500RT120LI Rear Panel

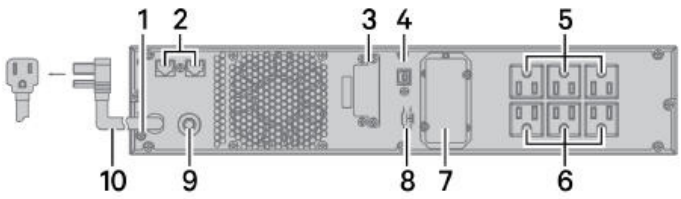

ITEM	DESCRIPTION
1	Grounding Screw for Network/Fax/Modem Surge Protection Input/Ouptut (Torque = 7 lbf-in)
2	Network/Fax/Modem Surge Protection Input/Output
3	External Battery Connector (not applicable on LI models)
4	USB Port
5	Programmable Receptacles
6	Non-Programmable Receptacles
7	IntelliSlot Port
8	Emergency Power Off (EPO) Connector
9	Input Circuit Breaker (10A, 13A, 16A for 800RT, 1100RT, 1500RT models respectively)
10	AC Input

Figure 1-2 Liebert® PSI5-2200RT120, PSI5-2200RT120TAA & PSI5-2200RT120LI Rear Panel

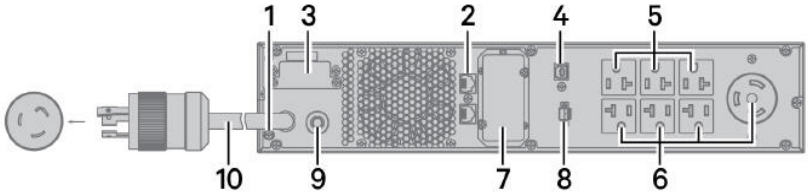

ITEM	DESCRIPTION
1	Grounding Screw for Network/Fax/Modem Surge Protection Input/Ouptut (Torque = 7 lbf-in)
2	Network/Fax/Modem Surge Protection Input/Output
3	External Battery Connector (not applicable on LI models)
4	USB Port
5	Programmable Receptacles
6	Non-Programmable Receptacles
7	IntelliSlot Port
8	Emergency Power Off (EPO) Connector
9	Input Circuit Breaker (20A)
10	AC Input

Figure 1-3 Liebert® PSI5-3000RT120, PSI5-3000RT120TAA & PSI5-3000RT120LI Rear Panel

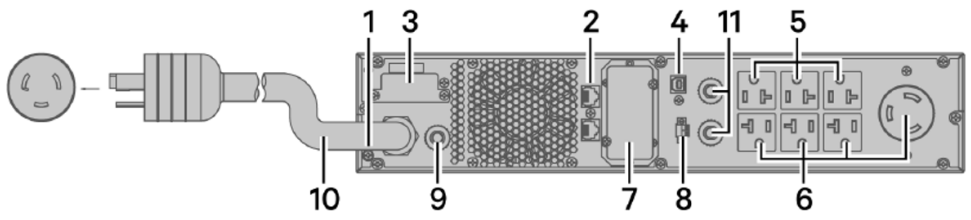

ITEM	DESCRIPTION
1	Grounding Screw for Network/Fax/Modem Surge Protection Input/Ouptut (Torque = 7 lbf-in)
2	Network/Fax/Modem Surge Protection Input/Output
3	External Battery Connector (not applicable on LI models)
4	USB Port
5	Programmable Receptacles
6	Non-Programmable Receptacles
7	IntelliSlot Port
8	Emergency Power Off (EPO) Connector
9	Input Circuit Breaker (30A)
10	AC Input
11	Output Circuit Breaker

Figure 1-4 Liebert® PSI5-5000RT208 Rear Panel

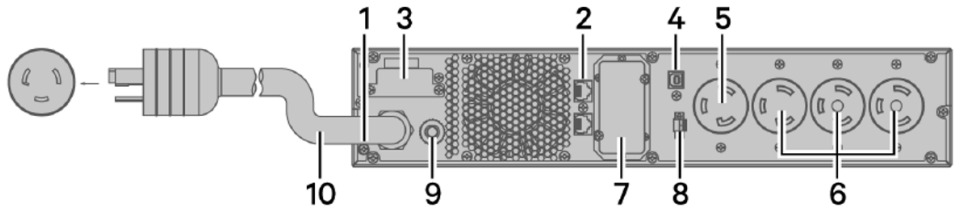

ITEM	DESCRIPTION
1	Grounding Screw for Network/Fax/Modem Surge Protection Input/Ouptut (Torque = 7 lbf-in)
2	Network/Fax/Modem Surge Protection Input/Output
3	External Battery Connector
4	USB Port
5	Programmable Receptacles
6	Non-Programmable Receptacles
7	IntelliSlot Port
8	Emergency Power Off (EPO) Connector
9	Input Circuit Breaker (30A)
10	AC Input

Figure 1-5 Liebert® PSI5-1000/1500RM1201U Rear Panel

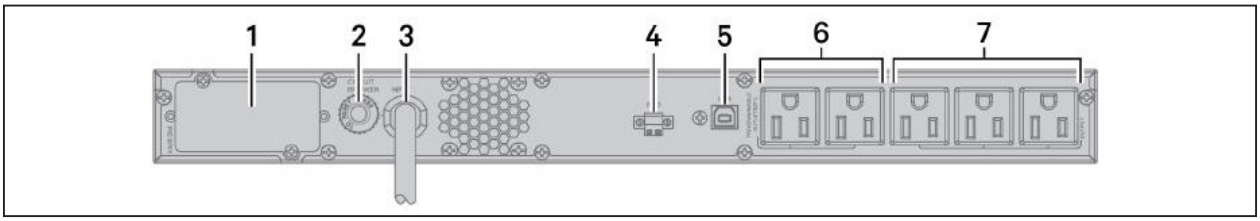

ITEM	DESCRIPTION
1	IntelliSlot Port
2	Input Circuit Breaker (13A, 16A for 1000RM and 1500RM models respectively)
3	AC Input
4	Emergency Power Off (EPO) Connector
5	USB Port
6	Programmable Receptacles
7	Non-Programmable Receptacles

Figure 1-6 Liebert® PSI5 Mini Tower Rear Panels

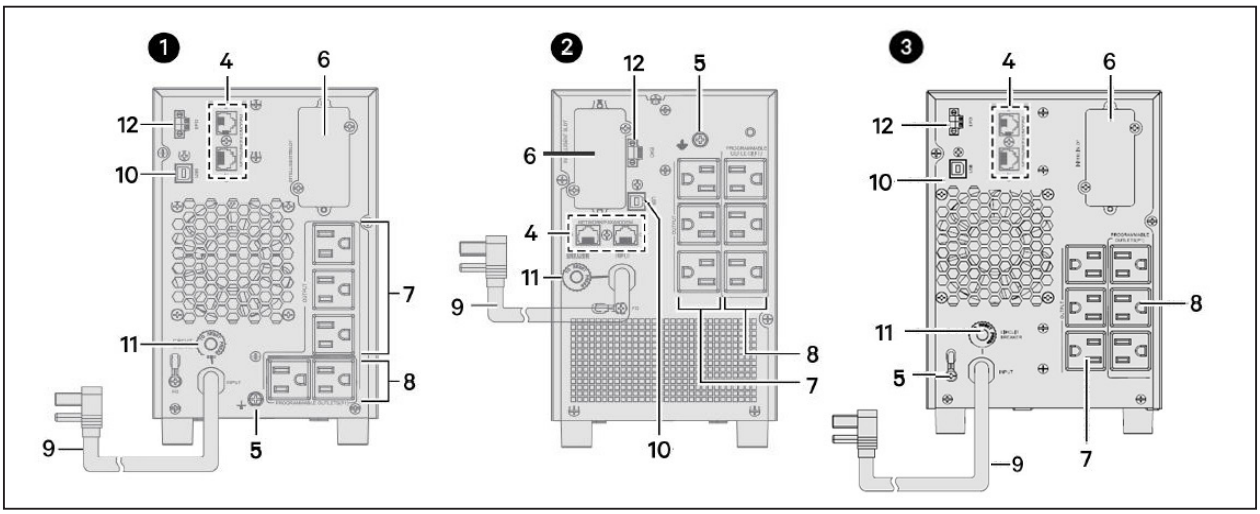

ITEM	DESCRIPTION
1	PSI5-750/1100MT120
2	PSI5-1500MT120
3	PSI5-1500MT120LI
4	Network/Fax/Modem Surge Protection Input/Output
5	Grounding Screw for Network/Fax/Modem Surge Protection Input/Ouptut (Torque = 7 lbf-in)
6	IntelliSlot Port
7	Non-Programmable Receptacles
8	Programmable Receptacles
9	AC Input
10	USB Port
11	AC Input Breaker (10A, 13A, 16A for 750MT, 1100MT, 1500MT models respectively)
12	Emergency Power Off (EPO) Connector

1.3 Front Panel

NOTE: For detailed descriptions of the LCD, see Display Panel Indicators on page 19.

Figure 1-7 Controls and Display on 2U and MT Models

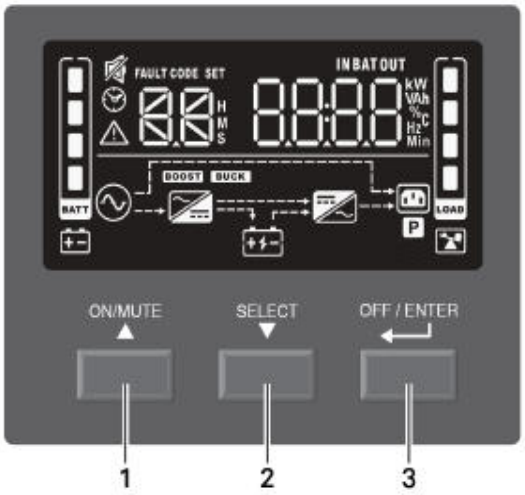

ITEM	DESCRIPTION
1	ON/MUTE button. See Controls on page 18, for details.
2	SELECT button. See Controls on page 18, for details.
3	OFF/ENTER button. See Controls on page 18, for details.

Figure 1-8 Controls and Display on 1U Models

ITEM	DESCRIPTION
1	ON/MUTE button. See Controls on page 18, for details.
2	SELECT button. See Controls on page 18, for details.
3	OFF/ENTER button. See Controls on page 18, for details.

This page is intentionally left blank.

2 Installation

2.1 What's Included

RT models

- UPS
- Accessory box including
    - Quick installation guide
    - Safety and regulatory statements
    - Front bezel
    - 4 x Tower feet and screws (M4 x 8 mm)
    - 2 x UPS rack ears
    - 8 x Rack ear screws (M4 x 8 mm)
    - USB type A to B cable
- Rail slide kit box
    - Left and right rail set
    - 8 x Rail kit screws (M6 x 12 mm)
    - 4 x Fixing studs (Ø8.5 mm x 15.5 mm)
    - 6 x Rack nuts (M6)
- NEMA L5-20R to 5-20P adapter cord (2200RT models only)

RM models:

- UPS
- Accessory box including:
    - Quick installation guide
    - Safety Instructions
    - 2 x UPS rack ears
    - 8 x Rack ear screws (M4 x 8mm)
    - USB type A to B cable
- Rail slide kit box
    - Left and right rail set
    - 8 x Rack kit screws (M6 x 12mm)
    - 4 x Fixing studs (Ø8.5mm x 15.5mm)
    - 6 x Rack nuts (M6)

MT models

- UPS
- Quick installation guide
- Safety and regulatory statements
- USB type A to B cable

2.2 Unpacking and Inspection

Unpack the UPS and conduct the following checks:

- Inspect the UPS for shipping damage. If any shipping damage is found, report it to the carrier and your local dealer or your Vertiv™ representative immediately.
- Check the accessories included in the packing list. If there is any discrepancy, contact your local dealer or Vertiv representative immediately.

2.3 Preparation for installation

2.3.1 Installation Environment

- Install the UPS indoors in a controlled environment where it cannot be accidentally turned off. The installation environment should meet the conditions listed Specifications on page 31.
- Place it in an area of unrestricted airflow around the unit, away from water, flammable liquids, gases, corrosives and conductive contaminants. Avoid direct sunlight.
- The socket outlet should be nearby and easily accessible.

NOTE: Operating the UPS in temperatures above 77°F (25°C) reduces battery life.

2.3.2 Installation Clearances

Maintain at least 4 in. (100 mm) clearance in the front and rear. Do not obstruct the air inlets on the front panel and rear panel. Blocking the air inlets reduces ventilation and heat dissipation, shortening the service life of the UPS.

2.4 Installing the UPS

2.4.1 Installing a 2U Model

The 2U UPS and optional battery cabinets may be installed in a tower or rack configuration. The 2ULI models may also be installed in a tower or rack configuration but do not support external battery cabinets. Determine the configuration that meets your application needs, see Tower Installation below, or Rack-Mount Installation on the facing page.

Tower Installation

When using the UPS in a tower configuration, see Figure 2-1 below. If you have an external battery, see Figure 2-2.

Figure 2-1 Attaching stands to the UPS

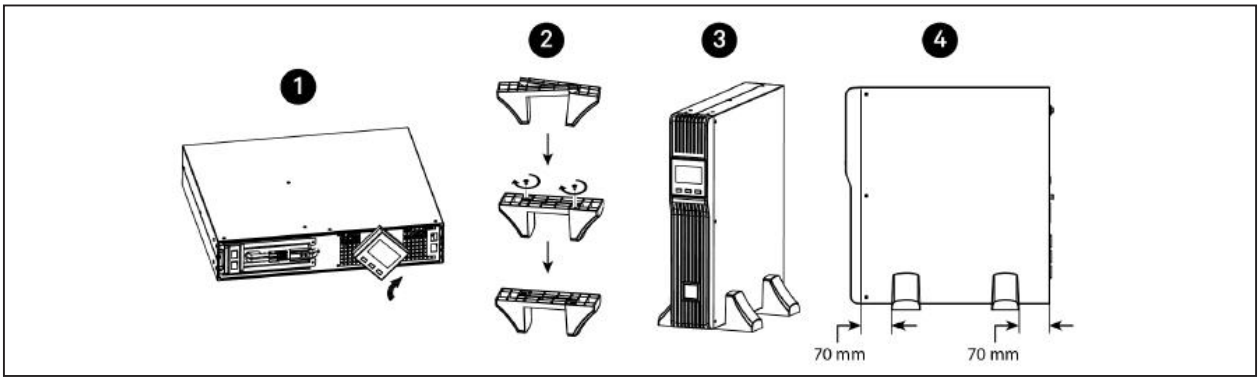

ITEM	DESCRIPTION
1	Rotate the display by pulling out, and turning it clockwise until it is seated in the proper orientation.
2	Connect the two halves of the stand together.
3	Place the UPS in the stands.
4	Make sure that the stands are installed 70mm (2.76 in.) form the edge of the unit.

Figure 2-2 Attaching stands to the UPS and external battery

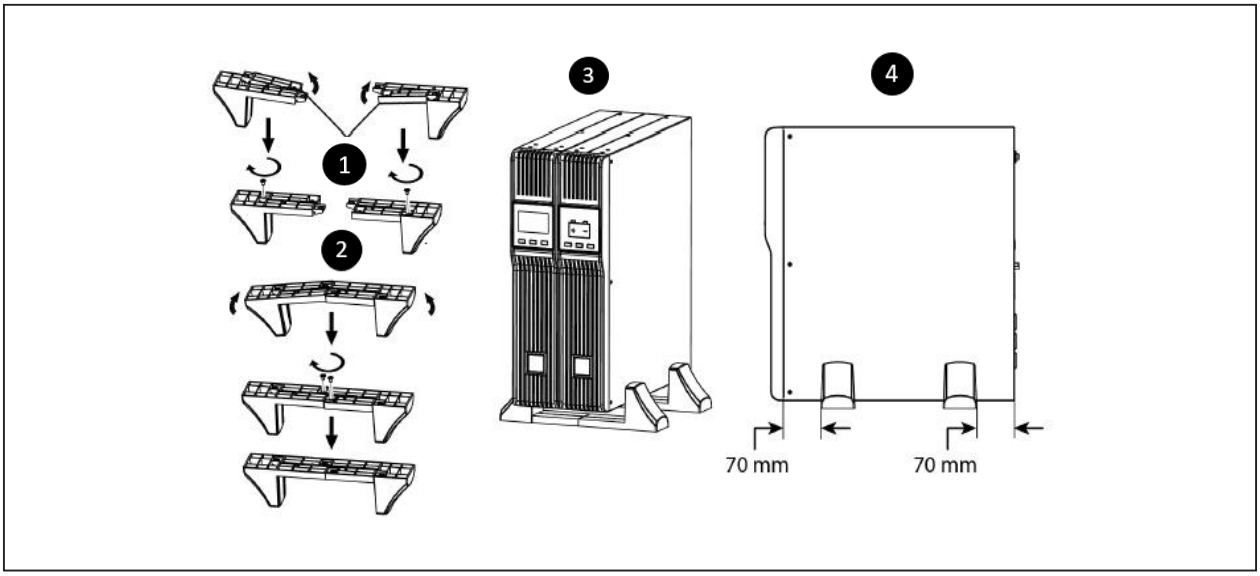

ITEM	DESCRIPTION
1	Insert a spacer on each stand and install the securing screws.
2	Connect the two halves of the stand together and install the securing screws
3	Place the UPS and external battery pack in the stands (rotate the display on the UPS if desired, see Figure 2-1)
4	Make sure that the stands are installed 70 mm (2.76 in.) from the edge of the unit.

Rack-Mount Installation

CAUTION: Do not use the mounting brackets to lift the unit. Use the mounting brackets only to secure the UPS to the rack.

See Figure 2-3 to install the unit in a rack. If you have an external battery, see Figure 2-4.

Figure 2-3 Installing the UPS in a rack

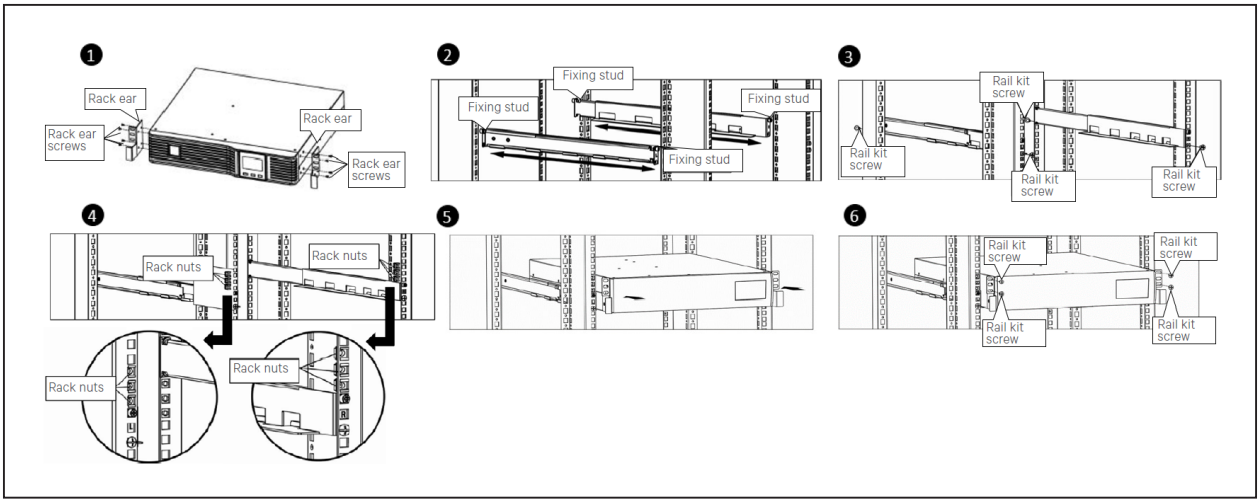

ITEM	DESCRIPTION
1	Attach the rack ears with four rack ear screws to the front right and left sides of the UPS
2	Attach two fixing studs to each rail. Select the desired U position and position the rails onto the rack using the fixing studs.
3	Attach two rail kit screws to each rail to secure the rails to the rack.
4	Attach three rack nuts on each side of the rack
5	Place the UPS with attached rack ears onto the rail supports. The batteries may be temporarily removed for easier installation.
6	Attach two rail kit screws to each UPS rack ear and corresponding rack nut to secure the UPS to the rack.

Figure 2-4 Installing the external battery in a rack

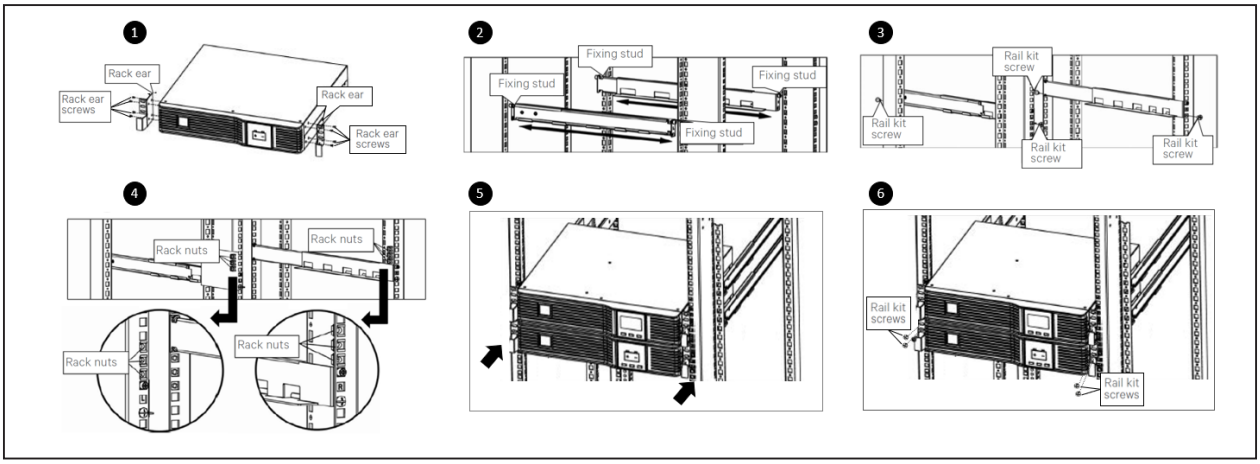

ITEM	DESCRIPTION
1	Attach the rack ears with four rack ear screws to the front right and left sides of the external battery.
2	Attach two fixing studs to each rail. Select the desired U position and position the rails onto the rack using the fixing studs.
3	Attach two rail kit screws to each rail to secure the rails to the rack.
4	Attach three rack nuts on each side of the rack.
5	Place the external battery with attached rack ears onto the rail supports.
6	Attach two rail kit screws to each external battery kit rack ear and corresponding rack nut to secure the external battery to the rack.

2.4.2 Installing a 1U Model

CAUTION: Do not use the mounting brackets to lift the unit. Use the mounting brackets only to secure the UPS to the rack.

See Figure 2-5 below to install the unit.

Figure 2-5 Installing the UPS in a rack

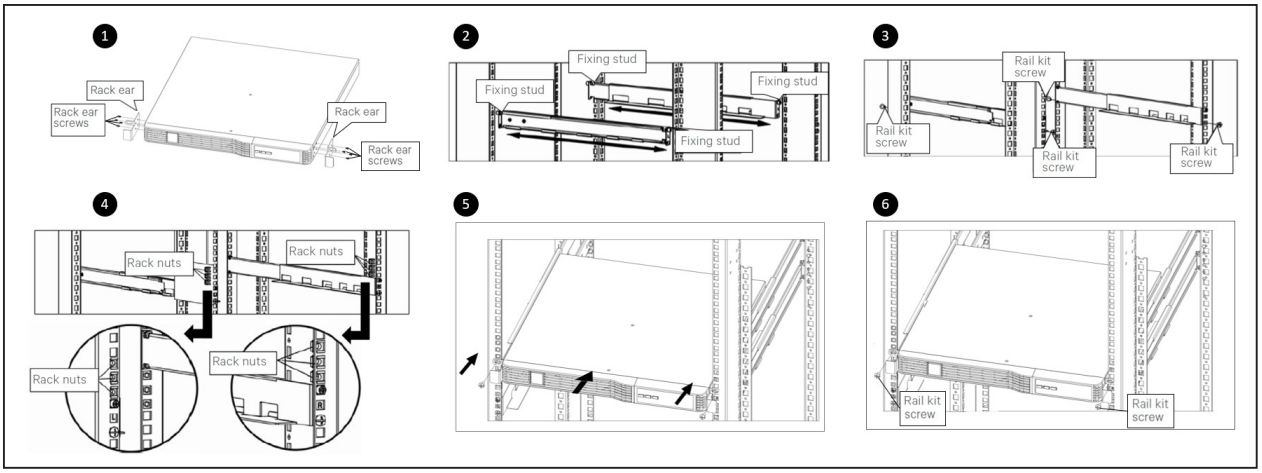

ITEM	DESCRIPTION
1	Attach the rack ears with four rack ear screws to the front right and left sides of the UPS
2	Attach two fixing studs to each rail. Select the desired U position and position the rails onto the rack using the fixing studs
3	Attach two rail kit screws to each rail to secure the rails to the rack
4	Attach rack nuts on each side of the rack
5	Place the UPS with attached rack ears onto the rail supports. The batteries may be temporarily removed for easier installation.
6	Attach a rail kit screw to each UPS rack ear and corresponding rack nut to secure the UPS to the rack

2.4.3 Installing a Mini Tower (MT) Model

Place the unit upright, on its feet without blocking air inlets.

2.5 Connecting Loads

The UPS has non-programmable and programmable outlets. Plug your critical equipment (such as computer, monitors, etc.) into the non-programmable outlets and your less-critical equipment (such as printers and other less-often used peripherals) into the programmable outlets. Refer to setting numbers 2 and 3 in Table 3-6 for programming instructions.

2.6 Connecting for Network Protection (Optional)

Protection from electrical surges to your computer network or telephone is provided on 2U and MT models. Use the network/fax/modem surge-protection ports on the rear panel. Connect the “IN” port to the line from the wall jack and the “OUT” port to your device port. Use of this feature is not required for proper operation of the UPS.

2.7 USB Connection

Basic monitoring of the PSI5™ and unattended controlled shutdown of your computer in case of a power failure can be done using the Liebert Power Assist software via the USB port. Visit www. vertiv.com/ powerassist for additional information.

2.8 Emergency Power Off (EPO) Connection (Optional)

To comply with national and local wiring codes and regulations, the EPO connector internally disconnects all power sources to equipment connected to the UPS. The default operation is “active open” which means you must remove the factory-installed jumper and connect to external contacts that are normally closed but which open during a power-off event. The logic may be reversed in the Settings; see Configuring UPS with the Settings Menu on page 23. If you do not use the EPO connector, leave the factory-installed jumper in place and the default EPO settings in the Settings.

2.9 External Battery Cabinet Connection on 2U Models (Optional)

External battery cabinets provide longer battery run time for connected devices. Refer to Specifications on page 31, and Run Times on page 38, to select the appropriate model and quantity for your PSI5 model and applications. You can connect up to six battery cabinets to the 2U PSI5 models. LI, MT, and 1U models do not support external battery cabinets.

To connect an external battery pack:

1. Connect one end of the external battery cable to the UPS and one end to the battery cabinet as shown in Figure 2-6 on the facing page.
2. If connecting more than one external battery, connect one end of the external battery cable to the second connector on the battery cabinet, the connect the other end to the next battery cabinet as shown in Figure 2-6 on the facing page.

NOTE: After installation and initial startup, set the number of installed battery cabinets in the UPS Settings.

NOTE: When two or more external battery cabinets are used with PSI5-1100/2200/3000/5000 models, the UPS load rating is decreased by 20%.

Figure 2-6 Connecting External Batteries

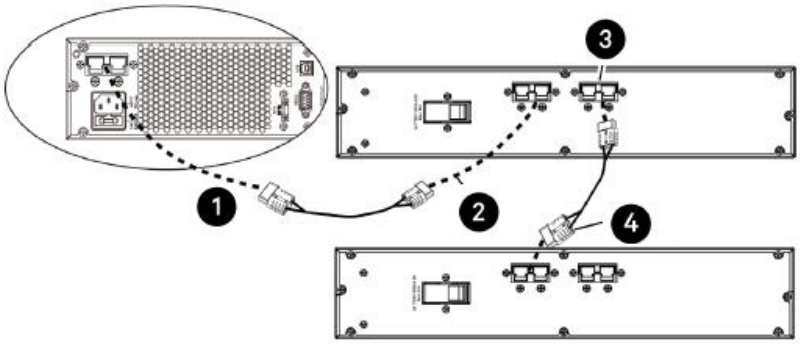

ITEM	DESCRIPTION
1	Connection to UPS
2	Connection from UPS to single/first external battery
3	Connection to second connector on external battery cabinet for additional battery cabinets.
4	Connect to next external battery

2.10 Network Communication Card Connection (Optional)

Advanced monitoring and simple control of the PSI5 can be done with the use of a Vertiv Liebert IntelliSlot Unity Communications card. Visit www.vertiv. com/intellislot for additional information.

To install the card:

1. Remove the two screws and protective cover on the rear panel network communications port.
2. Insert the card into the port and secure it with the screws. Refer to the documentation with the card or at the link above for cable connection and operation.

2.11 Connecting AC Input

CAUTION: For 1U and MT UPS models, to reduce the risk of fire, connect only to a circuit provided with 20A maximum branch circuit over current protection in accordance with the National Electrical Code, ANSI/NFPA 70 and the Canadian Electrical Code, Part I, C22.1.

Ensure that all the loads are first powered off. Connect to an input power supply/wall outlet that is properly protected by a circuit breaker in accordance with national and local electrical codes. The input receptacle must be grounded. See Specifications on page 31, for input cord rating. An external circuit breaker as described in Table 2-1 below is recommended.

Once the UPS is plugged into the wall outlet, it begins charging the battery.

NOTE: While every precaution has been taken to ensure that the battery is in good condition, Vertiv™ recommends plugging the UPS into AC input and to charge the battery for at least 12 hours prior to providing full backup time protection for any utility power abnormality.

Table 2-1 Recommended external circuit breaker

WIRING	
MODEL	RECOMMENDED EXTERNAL BREAKER
PSI5-750MT120	15A
PSI5-800RT120	
PSI5-1100RM1201U	
PSI5-1100MT120	
PSI5-1100RT120	
PSI5-1500RM1201U	
PSI5-1500RT120	
PSI5-1500RT120TAA	
PSI5-1500MT120	
PSI5-1500MT120LI	
PSI5-2200RT120	20A
PSI5-2200RT120TAA	
PSI5-2200RT120LI	
PSI5-3000RT120TAA	30A
PSI5-3000RT120LI	
PSI5-3000RT120	
PSI5-5000RT208	

3 Operation

3.1 Modes of Operation

3.1.1 Off Mode

The UPS input is plugged into a stable, nominal source, but the outlets are turned off. The internal batteries are charging.

3.1.2 On/Normal Mode

The UPS input is plugged into a stable, nominal source, and the outlets are turned on. The internal batteries are charging.

3.1.3 On/Automatic Voltage Regulation (AVR)/Boost Mode

The UPS input is plugged in, but the voltage source is abnormally low (brown-out). The UPS automatically corrects the low voltage and allows the outlets to be on with the normal, expected voltage. The internal batteries are charging.

3.1.4 On/Automatic Voltage Regulation (AVR)/Buck Mode

The UPS input is plugged in, but the voltage source is abnormally high. The UPS automatically corrects the high voltage and allows the outlets to be on with the normal, expected voltage. The internal batteries are charging.

3.1.5 On/Battery Mode

The UPS input is not plugged in or the voltage source has become extremely low or high and unusable. The UPS automatically switches to the internal battery to provide normal, usable voltage to the outlets.

3.1.6 Fault Mode

An error or fault condition has occurred. The outlets are shut off.

3.1.7 Battery Self-Test Mode

The UPS enters a cycle of approximately 10 seconds during which it tests the internal battery. The outlets are still temporarily powered by the internal battery. Self-test mode occurs at the following instances:

- At startup when turning the UPS on.
- Automatically every 8 weeks as a self-check.
- Manually by pressing and holding the ON/Mute button for 3 seconds when the unit is on.

3.1.8 Controls

Figure 3-1 Display and Buttons on the front panel of 2U and MT units

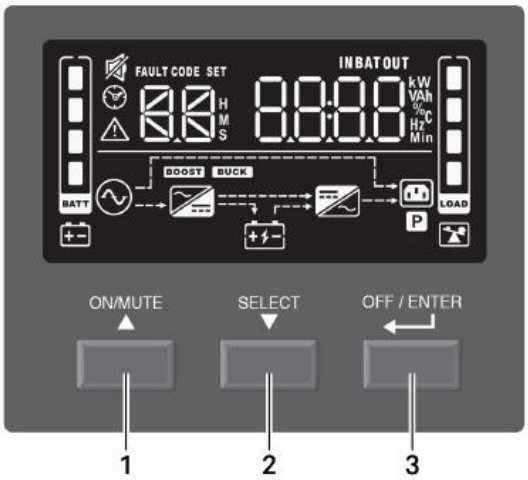

Figure 3-2 Display and Buttons on the front panel of 1U units

Table 3-1 PSI5 Button Description

ITEM	DESCRIPTION
1	ON/MUTE Button. • Turn UPS on: When in Off mode, press and hold for 2 seconds to enter Battery Self-Test mode, then On mode. • Manual Battery Self-Check: When in On mode, press and hold for 3 seconds to temporarily enter Battery Self-Test mode. • Mute: When in On/Battery mode, press and hold for 3 seconds • Settings Menu UP: When in the Settings Menu, press to cycle up through options; See Configuring UPS with the Settings Menu on page 23.
2	SELECT Button. • Select: Press to cycle through the operating parameters • Settings Menu: When in Off mode, press and hold for 3 seconds to enter the Settings Menu • Settings Menu Down: When in Settings Menu, press to cycle down through setting options, See Configuring UPS with the Settings Menu on page 23.
3	OFF/ENTER Button. • UPS Off: When in On mode, press and hold for 2 seconds to enter Off mode. • Settings Menu Enter: When in the Settings Menu, press and hold to enter setting option, press and hold again to return to setting number. See Configuring UPS with the Settings Menu on page 23.

3.2 Display Panel Indicators

NOTE: The display automatically powers off to conserve power. Press any button quickly to wake the display.

Figure 3-1 on page 18, shows the LCD on the front panel of the UPS.

Table 3-2 Display icons, sections and functions

ICONS AND DISPLAY	DESCRIPTION
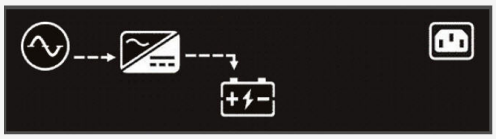	Off mode
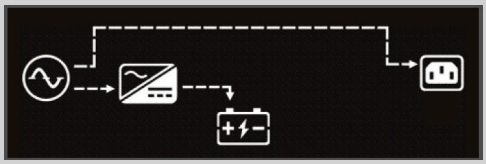	On/Normal mode
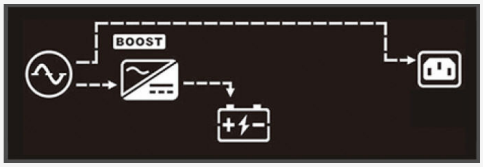	On/AVR/Boost mode
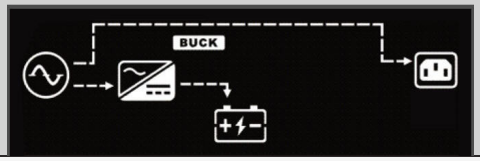	On/AVR/Buck mode
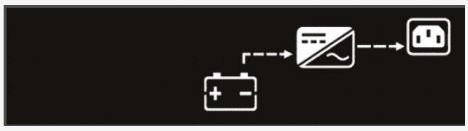	On/Battery mode
	Estimated backup time in H (hours). M (minutes), or S (seconds)
	Indicates warning and fault codes. See Faults on page 22, and Warnings on page 21.
	Displays various UPS operation parameters.

ICONS AND DISPLAY	DESCRIPTION
	Settings menu. See Configuring UPS with the Settings Menu on page 23.
	Audible On/Battery mode alarm silenced
	UPS output load in 25% increments
	Battery level in 25% increments
	Low battery
	Overload icon
	Programmable outlet icon
	Battery icon
	Battery charging icon

3.3 Audible-Tone Indicators

Table 3-3 Tones and Beeps of the UPS

TYPE	INDICATES
1 beep every 10 seconds	Battery mode
1 beep every second	Overload warning
1 beep every 2 seconds	Low-battery warning
	Other warning
Constant, solid tone	Fault
1 beep	Power On
	Battery self-test
	Button press
1 long tone	Power off

3.4 Warnings

The UPS has early warning indicators that allow the UPS to function normally for a short period before the outputs are shut off.

Table 3-4 Warning Indicators and Actions

ITEM	DESCRIPTION	TROUBLESHOOTING
bL	Battery low	Charge the UPS battery for at least 12 hours or replace the battery; see Replacing the UPS Batteries on page 27.
OL	Overload	Reduce the load to below the rating indicated in the Specifications on page 31.
SF	Site wiring fault	Turn of the UPS and call an electrician to correct the wiring. Possible causes are that the line and neutral are reversed or that there is no ground conductor.
tP	Over temperature	Call Vertiv™ customer support, 1-800-222-5877.
CH	Charger failure	Call Vertiv™ customer support, 1-800-222-5877.
bF	Battery fault	Charge the UPS battery for at least 12 hours or replace the battery; see Replacing the UPS Batteries on page 27.

ITEM	DESCRIPTION	TROUBLESHOOTING
bR	Battery replacement	Charge the UPS battery for at least 12 hours or replace the battery; see Replacing the UPS Batteries on page 27.
EE	EEPROM error	Call Vertiv™ customer support, 1-800-222-5877.
nC	Internal battery is not connected	Check the connection of the battery, see Replacing the UPS Batteries on page 27.
OC	Over charge	Call Vertiv™ customer support, 1-800-222-5877.
EP	Emergency Power Off activated	Remove the EPO state on the EPO connector. **NOTE: Output Immediately shuts off when the EPO warning occurs.**

3.5 Faults

The UPS displays fault codes when it detects a problem and automatically shuts off output power.

Table 3-5 Fault Codes and Actions

CODE	DESCRIPTION	TROUBLESHOOTING
01	Bus start fail	Call Vertiv™ customer support, 1-800-222-5877.
02	Bus over	
03	Bus under	
11	Inverter soft start fail	
12	Inverter voltage high	Turn Off the UPS, disconnect all connected loads and restart the UPS. If the fault is still active, call Vertiv customer support, 1-800-222-5877. If the fault is no longer active, plug each piece of equipment in one at a time to locate the device that has the short circuit
13	Inverter voltage low	
14	Inverter output short	
27	Battery voltage too high	Replace the battery or call Vertiv™ customer support, 1-800-222-5877.
28	Battery voltage too low	
41	Over temperature	Make sure that the air temperature is within the range listed in Specifications on page 31. Otherwise, call Vertiv™ customer support, 1-800-222-5877.
43	Overload	Reduce the load to below the UPS rating listed in Specifications on page 31, and restart the UPS.
45	Charger failure	Call Vertiv™ customer support, 1-800-222-5877.

3.6 Normal Startup

- With the UPS connected to AC input Press and hold the ON/MUTE button for 2 seconds.

  The UPS is in Battery Self-Test mode for 10 seconds. After a successful self-test, the UPS is on.

3.7 Normal Shutdown

1. Press and hold the power button for 2 seconds. The outlets are turned off.
2. Disconnect AC input power.

3.8 Full Shutdown

1. Press and hold the power button for 2 seconds. The outlets are turned off.
2. Disconnect AC input power
3. Remove the front bezel, disconnect the battery connector and replace the front bezel. The unit is fully shut down.

3.9 Configuring UPS with the Settings Menu

You may adjust several settings to configure the UPS to operate with your equipment In Settings mode, the UPS displays two parameter fields (see Figure 3-3 below) The first selects the setting option to configure and the second lists the selectable parameters for each setting option. Table 3-6 describes the setting options. In addition, symbols relevant to the setting option may be shown. The symbols are described in Table 3-2 on page 19.

Figure 3-3 UPS Display In Setting Mode

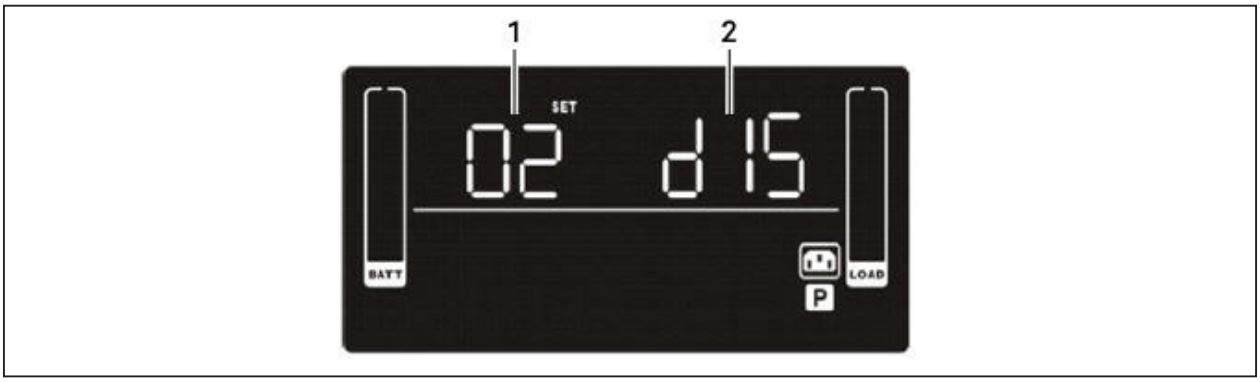

ITEM	DESCRIPTION
1	Setting option number
2	Setting parameter

To access Settings mode and adjust settings:

1. Power off the UPS by pressing the OFF/Enter button for at least 2 seconds.
2. Press and hold the Select button for 3 seconds. Settings mode displays; see Figure 3-3 above.
3. Use the up/down arrow buttons to display the number of the setting function to adjust, then press OFF/Enter See Table 3-6 on the facing page, for the options.
4. Use the up/down arrow buttons to select the setting, then press OFF/Enter. See Table 3-6 for the settings.
5. When finished, select setting option 00, and press OFF/Enter to exit Settings mode.

Table 3-6 Setting Numbers and Options

SETTING NUMBER	SETTING OPTIONS
01	Nominal voltage setting. Set the nominal system voltage to match the input voltage of the UPS. This setting affects the buck/boost/on-battery transfer points and sets the output voltage in Battery mode. For 120 VAC models: • 100 = 100VAC • 110 = 110VAC • 115 = 115VAC • 120 = 120VAC (default) • 125 = 125VAC For 208 VAC models • 200 = 200VAC • 208 = 208VAC (default) • 240 = 240VAC
02	Enable/Disable programmable outlets. • ENA = Enable, programmable outlets are powered when running on battery per the time assigned in setting 3. • DIS = Disable (default), programmable outlets are powered when running on battery until battery end of discharge.
03	Programmable outlets time limit with setting 2 enabled. Set a maximum time the programmable outlets are powered when running on battery. Setting a shorter time limit for programmable outlets extends the time the non-programmable outlets are powered when running on battery • O to 999 minutes (999 is default)
04	Enable/Disable site fault detection. • ENA = Enable (default) • DIS = Disable
05	Enable/Disable neutral grounding in battery mode • ENA = Enable (default) • DIS = Disable
06	Battery backup time limit. Sets a maximum time to provide output when running on battery. • O to 999 = minutes, selecting 0 (zero) sets a limit of 10 seconds. • DIS = Disable Backup time depends on battery capacity (default)
07	Set the number of connected external battery cabinets. (available only on VRLA 2U models) • O to 6 (0 is default) **NOTE: For the Liebert PSI5-1100/2200/3000/5000: When using two or more external battery cabinets (EBCs) the UPS load rating will be decreased by 20%. The % load graph on the LCD automatically adjusts to reflect this derating.**
08 (11 on TAA models)	Set the Energency Power Off (EPO) logic function. • AO = Active Open (default) Activates Emergency Power Off when EPO connector pins are not jumpered (open). • AC =Active Close Activates Emergency Power Off when EPO connector pins are jumpered (closed).

SETTING NUMBER	SETTING OPTIONS
09 (12 on TAA models)	Set the sensitivity of acceptable input voltage quality. When distortion or disturbances are detected on the input voltage, the UPS protects the plugged-in equipment by switching to Battery mode. The lower the sensitivity setting, the less frequently the UPS switches to battery, but the more distortion and noise may be passed through to the plugged-in equipment. If you are using a poor quality input source such as a generator or step-wave source on which your equipment can fully operate, a lower sensitivity setting may provide longer battery life and run times. • ST1 - High sensitivity (default). Provides the maximum protection. The transfer time is typically 4 to 6 ms, 10ms max. • ST2 - Medium sensitivity. Provides medium protection. The transfer is typically 6 to 8 ms, 11 ms max. • ST3 - Low sensitivity. Provides the least protection but may provide longer battery life and run time for tolerant equipment. The transfer time is typically 8 to 10 ms, 13 ms max.
13 (Only available on TAA models)	Resets the UPS Power On Counter to 0. This counts the number of times the UPS has been powered on since the first startup or the last time it was reset. • YES – Reset the counter to 0 • NO – Do not reset to 0 and return to setting selection
14 (Only available on TAA models)	Resets all UPS Settings to their factory defaults. • YES – Reset to factory default settings • NO – Do not reset to factory defaults and return to setting selection
00	Exit Settings mode.

This page is intentionally left blank.

4 Maintenance and Battery Replacement

4.1 Precautions

Although the Liebert® PSI5 is designed and manufactured to ensure personal safety, improper use can result in electrical shock or fire. To ensure safety, observe the following precautions:

- Turn off and unplug the UPS before cleaning it.
- Clean the UPS with a dry cloth. Do not use liquid or aerosol cleaners.
- Never block or insert any objects into the ventilation holes or other openings of the UPS.
- Do not place the UPS power cord where it might be damaged.

4.2 Battery Charging

The batteries are valve-regulated, non-spillable, lead-acid in all models except for the LI, which uses LiFeP04 type lithium-ion batteries. In all cases, the batteries should be kept charged to retain their design life. The PSI5 charges the batteries continuously when it is connected to input power. If the PSI5 will be stored for a long time, Vertiv™ recommends connecting the UPS to input power every 4 to 6 months for at least 2 hours for LI models and 24 hours for lead acid models to ensure full recharge of the batteries.

The Lithium Ion batteries used in the PSI5 LI series, as well as all Vertiv Lithium-Ion UPSs, contain a Battery Management System (BMS) that self-monitors the safety of the LI batteries in real-time. This is an agency tested and certified requirement now eliminating the industry wide safety risk known with previous Li-Ion batteries.

4.3 Replacing the UPS Batteries

IMPORTANT! Before you proceed, please review the battery safety precautions available at https://www.vertiv.com/ComplianceRegulatoryInfo

You may safely replace the internal battery pack. See the Specifications on page 31, for the part number of the replacement battery for your UPS model number.

NOTE: Replace the battery with the same type and number as originally installed.

NOTE: The internal battery pack is hot-swappable. However, caution should be exercised because during this procedure the load is unprotected from disturbances and power outages. Do not replace the battery while the UPS is operating in Battery Mode. This will result in a loss of output power and will drop the connected load.

To replace the batteries on 1U and 2U models:

1. Remove the front bezel by pulling firmly until the snaps release.
2. Disconnect the battery connector by squeezing the ends and gently pulling the two pieces apart.
3. Remove the two screws and the metal battery cover plate.
4. Slide out the existing battery kit.

5. For LI models: Attach the provided connector to the replacement battery terminals. Plug the black wire in first then the red. For VRLA models: skip this step.
6. Orient the connector and the new battery in the same way as the original battery and slide into UPS.
7. Reconnect the two halves of the battery connector and slide the front panel back on until it clicks.
8. Replace the metal plate and secure with the two screws.
9. Snap the front bezel back on.
10. Press and hold the power button for 3 seconds to initiate the Battery-Self Check mode clearing any previous battery fault warning.
11. Properly dispose of the old batteries at an appropriate recycling facility or return them to Vertiv™ in the packing material from the new batteries.

Figure 4-1 Removing the battery box from 2U units to replace batteries

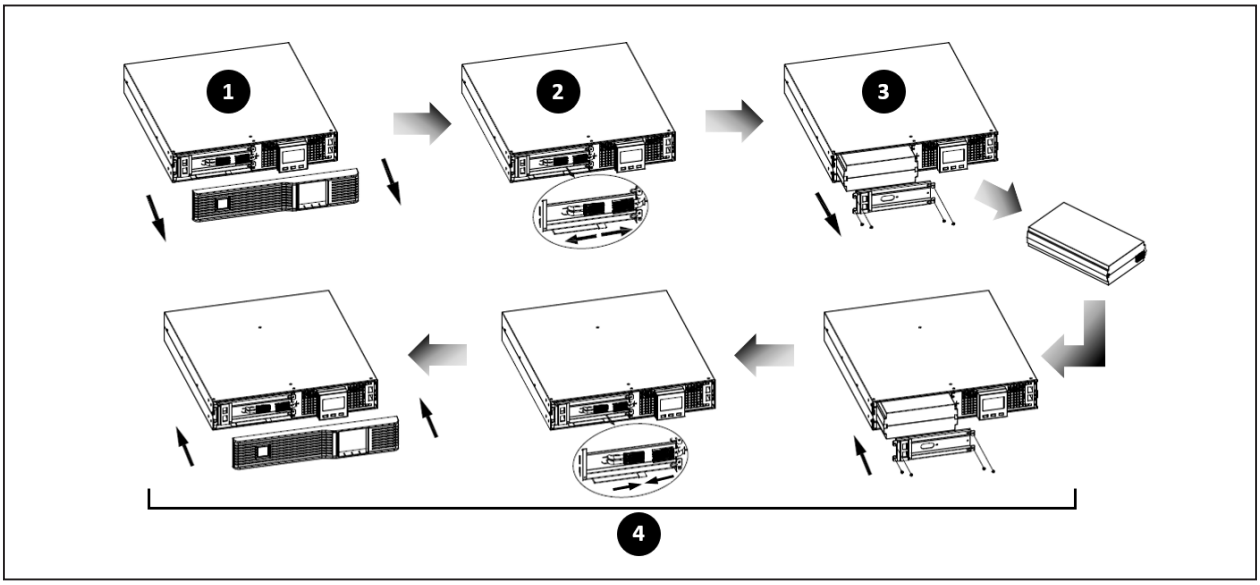

ITEM	DESCRIPTION
1	Remove the front panel from the UPS.
2	Disconnect the battery connector by squeezing the ends of the connectors and pulling apart.
3	Remove the 2 screws on the front panel of the battery box, and pull out the battery box.
4	For LI models: attach the provided connector to the replacement battery terminals. Plug the black wire in first then the red. For VRLA models: Skip this step
5	Place the battery box in the UPS, and re-install the front panel of the battery box.
6	Connect the battery wires.
7	Replace the front panel on the UPS.

Figure 4-2 Removing the battery box from 1U units to replace batteries

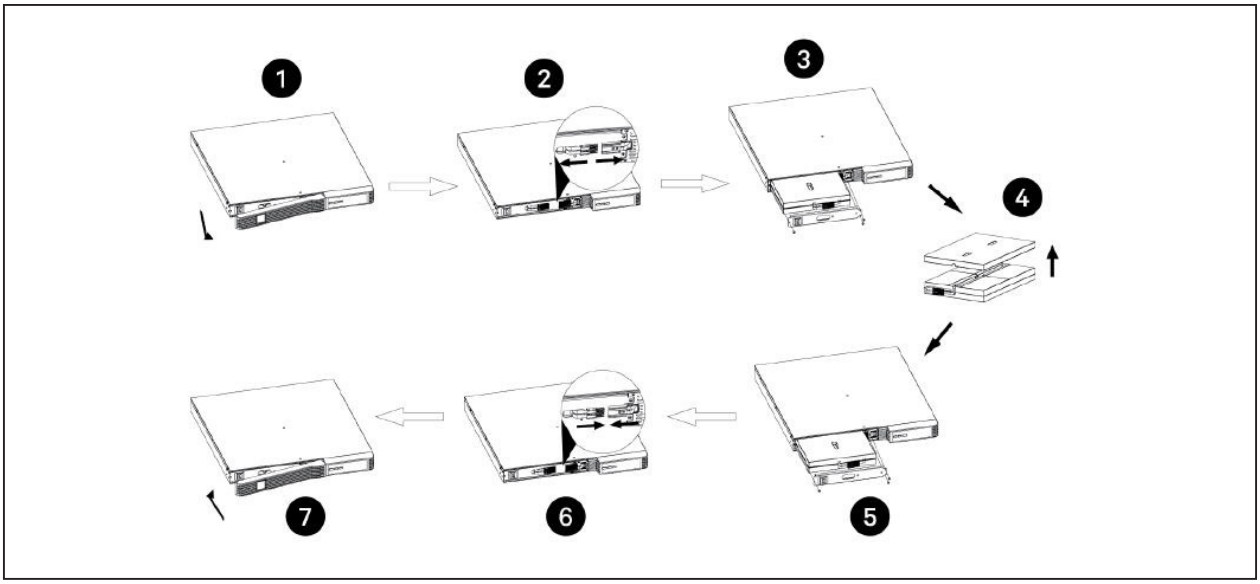

ITEM	DESCRIPTION
1	Remove the front panel.
2	Disconnect the battery connector by squeezing the ends of the connectors and pulling apart.
3	Remove screws and metal battery cover.
4	Remove the battery
5	Slide the replacement battery kit into the UPS. Replace the metal plate and secure with the two screws.
6	Reconnect the battery connector.
7	Snap the front panel back on.

To replace the batteries on MT models:

1. Place the unit on its left side and remove the 6 screws and the metal battery cover plate.
2. Slide out the existing battery kit and disconnect the two halves of the battery connector.
3. For LI models: attach the provided connector to the replacement battery terminals. Plug the black wire in first then the red. For VRLA models: skip this step.
4. Orient the connector and the new battery in the same way as the original battery, connect the two halves of the battery connector, and slide into UPS.
5. Replace the metal plate and secure with the 6 screws.
6. Press and hold the power button for 3 seconds to initiate the Battery-Self Check mode clearing any previous battery fault warning.
7. Properly dispose of the old batteries at an appropriate recycling facility or return them to Vertiv™ in the packing material from the new batteries.

Figure 4-3 Replacing the batteries on MT models

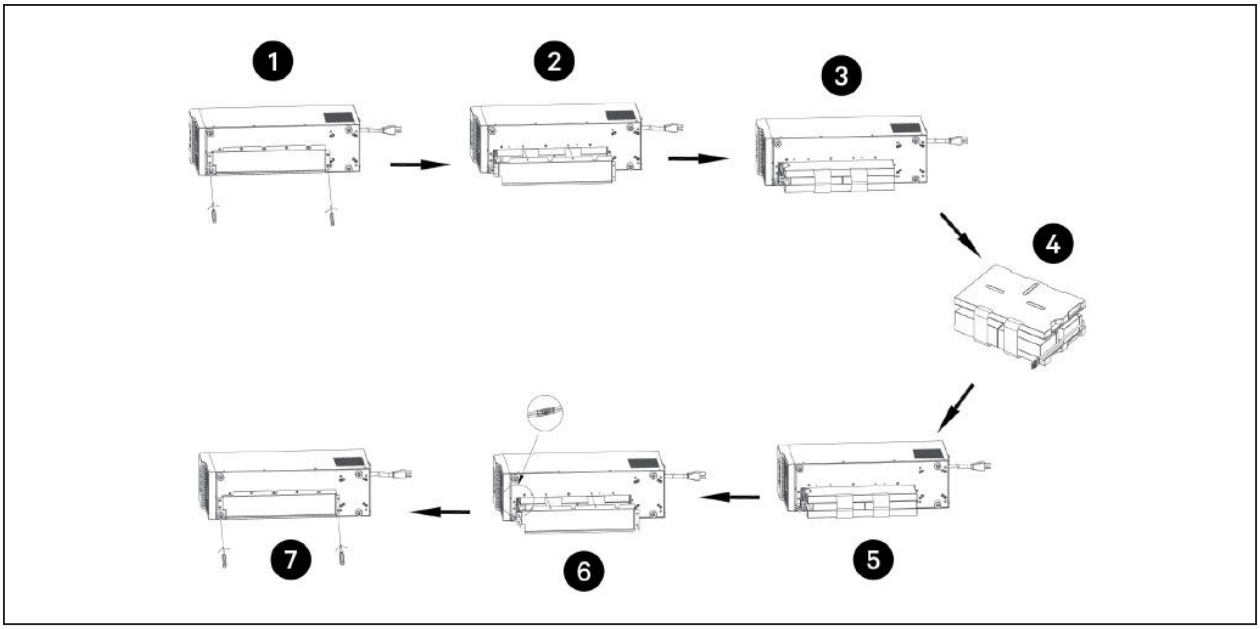

ITEM	DESCRIPTION
1	With unit laying on left side, remove screws from battery cover.
2	Remove the battery cover.
3	Slide out the battery kit and disconnect the battery connector.
4	Connect the battery connector to the replacement battery.
5	Slide the replacement battery kit into the UPS.
6	Replace the battery cover.
7	Secure the battery cover with the screws.

5 Specifications

Table 5-1 PSI5 Specifications for VRLA 2U Models

MODEL	PSI5-800RT120	PSI5-1100RT120	PSI5-1500RT120 / PSI5-1500RT-120TAA	PSI5-2200RT120 / PSI5-2200RT-120TAA	PSI5-3000RT120 / PSI5-3000RT-120TAA	PSI5-5000RT120
Power Rating						
125 VAC Input	800 VA, 720 W, 6.4 A	1100 VA, 990 W, 8.8 A	1500 VA, 1350 W, 12 A	1920 VA, 1920 W, 15.4 A	3000 VA, 2700 W, 24 A	-
120 VAC Input	800 VA, 720 W, 6.7 A	1100 VA, 990 W, 9.2 A	1440 VA, 1350 W, 12 A	1920 VA, 1920 W, 16 A	2880 VA, 2700 W, 24 A	-
115 VAC Input	800 VA, 720 W, 7.0 A	1100 VA, 990 W, 9.6 A	1380 VA, 1350 W, 12 A	1840 VA, 1840 W, 16 A	2760 VA, 2700 W, 24 A	-
110 VAC Input	800 VA, 612 W, 6.2 A	935 VA, 842 W, 8.5 A	1275 VA, 1147 W, 11.6 A	1632 VA, 1632 W, 14.8 A	2550 VA, 2295 W, 23.2 A	-
100 VAC Input	800 VA, 612 W, 6.8 A	935 VA, 842 W, 9.4 A	1200 VA, 1147 W, 12 A	1600 VA, 1600 W, 16 A	2400 VA, 2400 W, 24 A	-
240 VAC Input	-	-	-	-	-	5000 VA, 4500 W, 20.8 A
230 VAC Input	-	-	-	-	-	5000 VA, 4500 W, 21.7 A
220 VAC Input	-	-	-	-	-	5000 VA, 4500 W, 22.7 A
208 VAC Input	-	-	-	-	-	4250 VA, 3825 W, 20.4 A
200 VAC Input	-	-	-	-	-	4250 VA, 3825 W, 21.3 A
Dimensions and Weights						
Unit Dimensions W x D x H (in) (mm)	17.2 x 16.1 x 3.5 (438 x 410 x 88)		17.2 x 20.0 x 3.5 (438 x 510 x 88)	17.2 x 24.8 x 3.5 (438 x 630 x 88)		
Shipping Dimensions W x D x H (in) (mm)	10.2 x 22.9 x 22.4 (258 x 582 x 570)		10.2 x 26.5 x 22.4 (258 x 672 x 570)	10.2 x 26.7 x 22.4 (258 x 782 x 570)		
Unit Weight, lb. (kg)	29.3 (13.3)	31.1 (14.1)	43.0 (19.5)	59.3 (26.9)	71.4 (32.4)	81.0 (36.7)
Shipping Weight, lb. (kg)	41.7 (18.9)	43.4 (19.7)	56.0 (25.4)	73.6 (33.4)	85.8 (38.9)	95.2 (43.2)
Input						
Voltage Input Range (with battery operation)	0 to 150 VAC					0 to 300 VAC
Voltage Input Range (without battery operation)	75 to 146 VAC					150 to 281 VAC
Input Voltage Measurement Tolerance	±3%					
Nominal Voltage Setting	100 / 110 / 115 / 120 / 125 VAC					200 / 208 / 220 / 230 / 240 VAC
High Line Buck to Battery	117 / 129 / 135 / 140 / 146 VAC					234 / 243 / 257 / 269 / 281 VAC
High Line Battery to Buck	114 / 125 / 131 / 137 / 143 VAC					228 / 237 / 251 / 262 / 274 VAC

MODEL	PSI5-800RT120	PSI5-1100RT120	PSI5-1500RT120 / PSI5-1500RT-120TAA	PSI5-2200RT120 / PSI5-2200RT-120TAA	PSI5-3000RT120 / PSI5-3000RT-120TAA	PSI5-5000RT120
High Line Normal to Buck	110 / 121 / 127 / 132 / 138 VAC					220 / 229 / 242 / 253 / 264 VAC
High Line Buck to Normal	107 / 118 / 123 / 128 / 134 VAC					214 / 223 / 235 / 246 / 257 VA
Low Line Boost to Normal	93 / 102 / 107 / 112 / 116 VAC					186 / 193 / 205 / 214 / 223 VAC
Low Line Normal to Boost	90 / 99 / 104 / 108 / 113 VAC					180 / 187 / 198 / 207 / 216 VAC
Low Line Battery to Boost	80 / 88 / 92 / 96 / 100 VAC					160 / 166 / 176 / 184 / 192 VAC
Low Line Boost to Battery	75 / 83 / 86 / 90 / 94 VAC					150 / 156 / 165 / 173 / 180 VAC
Frequency Input Range	55 to 65 Hz (57 to 63 Hz Battery to Normal comeback)					
Internal Rear Panel Input Breaker	10 A	13 A	16 A	20 A	30 A	
Input Surge Protection	ANSI C62.41 Category A, Level 3 1372J					EN6100-4-5, Level 3 2064J
Input Power Cord	NEMA 5-15P, offset 90-degree type (3 m attached)			NEMA L5-20P (3 m attached) NEMA L5-20 to 5-20P adapter cord (150 mm)	NEMA L5-30P (3 m attached)	NEMA L6-30P (3 m attached)
Output						
Output Voltages (on battery)	100 / 110/ 115 / 120 / 125 VAC (±1.5 on battery before alarm) user selectable (120 VAC is factory default)					200 / 208 / 240VAC (±1.5 on battery before alarm) user selectable (208 VAC is factory default)
Output Frequency (on battery)	60 (default)/ 50 Hz ±1%					
Output Receptacles - not controllable	(3) NEMA 5-15R			(3) NEMA 5-15/20R, (1) NEMA L5-20R	(3) NEMA 5-15/20R, (1) NEMA L5-30R	(3) NEMA L6-30R
Output Receptacles - controllable	(3) NEMA 5-15R			(3) NEMA 5-20R		(1) NEMA L6-30R
Transfer Time	Adjustable with User Setting 09 ST1: 4-6 ms typical, 10 ms max. (default). ST2: 6-8 ms typical, 11 ms max. ST3: 8-10 ms typical, 13 ms max.					
Output Waveform (on battery)	Pure Sinewave					
Output Overload Operation	100% — Alarm warning 110% — Alarm warning and shutdown after 10 seconds 120% — Alarm warning and immediate shutdown					
Protection	Electronic (overcurrent, short circuit w/ latching shutdown)					
AC Mode Efficiency	96% for 100 / 110 / 115 / 120 / 125 VAC					
Buck and Boost Mode Efficiency	93% for 100 / 110 / 115 / 120/ 125 VAC					
Recharge Time	6-8 hours to recover to 90%					

MODEL	PSI5-800RT120	PSI5-1100RT120	PSI5-1500RT120 / PSI5-1500RT-120TAA	PSI5-2200RT120 / PSI5-2200RT-120TAA	PSI5-3000RT120 / PSI5-3000RT-120TAA	PSI5-5000RT120
Internal Battery						
Part Number	PSI5-800BATKIT	PSI5-1100BATKIT	PSI5-1500BATKIT/ PSI5-1500BATKITTAA	PSI5-2200BATKIT/ PSI5-2200BATKITTAA	PSI5-3000BATKIT/ PSI5-3000BATKITTAA	PSI5-5000BATKIT
Protection	Electronic (overcurrent, short circuit with latching shutdown)					
Type	Valve-regulated lead-acid (VRLA) in compliance with UL 1989					
Quantity x Voltage x Ah	2 x 12V x 9 Ah	2 x 12V x 10 Ah	4 x 12V x 9 Ah	6 x 12V x 7 Ah	6 x 12V x 10 Ah	6 x 12V x 10 Ah
External Battery Cabinets						
Model Number	PSI5-24VBATT		PSI5-48VBATT / PSI5-48VBATTTAA	PSI5-72VBATT / PSI5-72VBATTTAA		
Protection	Circuit Breaker					
Type	Valve-regulated lead-acid (VRLA) in compliance with UL 1989					
Quantity x Voltage x Ah	2 x 12V x 9.0 Ah / 2 x 12V x 9.0 Ah		4 x 12V x 9.0 Ah / 4 x 12V x 9.0 Ah	6 x 12V x 9.0 Ah / 6 x 12V x 9.0 Ah		
Unit Dimensions W x D x H (in) (mm)	17.2 x 16.1 x 3.5 (438 x 410 x 88)		17.2 x 20 x 3.5 (438 x 510 x 88)	17.2 x 24.8 x 3.5 (438 x 630 x 88)		
Shipping Dimensions W x D x H (in) (mm)	10.2 x 22.9 x 21.7 (258 x 582 x 550)		10.2 x 26.5 x 21.7 (258 x 670 x 550)	10.2 x 26.7 x 21.7 (258 x 782 x 550)		
Unit Weight, lb. (kg)	37.7 (17.1)		63.9 (29.0)	90.8 (41.2)		
Shipping Weight, lb. (kg)	51.8 (23.5)		70.3 (31.9)	96.1 (43.6)		
Environmental Requirements						
Operating Temperature °F (°C)	32 to 104 (0 to 40)					
Operating Elevation, ft. (m)	0 to 9,942 (0 to 3,000 without derating) Operating temperature reduced 9 °F (5 °C) for each additional 1,640ft. (500m) of altitude					
Relative Humidity	20% to 90% non-condensing					
Storage Temperature °F (°C)	5 to 122 (-15 to 50)					
Storage Relative Humidity	10% to 90% non-condensing					
Audible Noise	<45 dB @ Line mode < 55 dB @ Battery mode					

Table 5-2 PSI5 Specifications for VRLA 1U and MT Models

MODEL	PSI5-1000RM1201U	PSI5-1500RM1201U	PSI5-750MT120	PSI5-1100MT120	PSI5-1500MT120
Power Rating					
125 VAC Input	1000 VA, 900 W, 8 A	1500 VA, 1350 W, 12 A	750 VA, 675 W, 6 A	1100 VA, 990 W, 8.8 A	1500 VA, 1350 W, 12 A
120 VAC Input	1000 VA, 900 W, 8.3 A	1440 VA, 1350 W, 12 A	750 VA, 675 W, 6.3 A	1100 VA, 990 W, 9.2 A	1440 VA, 1350 W, 12 A
115 VAC Input	1000 VA, 900 W, 8.7 A	1380 VA, 1350 W, 12 A	750 VA, 675 W, 6.5 A	1100 VA, 990 W, 9.6 A	1380 VA, 1350 W, 12 A
110 VAC Input	850 VA, 765 W, 7.7 A	1275 VA, 1147 W, 11.6 A	750 VA, 675 W, 6.8 A	935 VA, 842 W, 8.5 A	1275 VA, 1147 W, 11.6 A
100 VAC Input	850 VA, 765 W, 8.5 A	1200 VA, 1147 W, 12 A	750 VA, 675 W, 7.5 A	935 VA, 842 W, 9.4 A	1200 VA, 1147 W, 12 A
Dimensions and Weights					
Unit Dimensions W x D x H (in) (mm)	17.2 x 18.9 x 1.7 (438 x 480 x 44)	17.2 x 23.6 x 1.7 (438 x 600 x 44)	5.7 x 14.8 x 8.7 (145 x 370 x 220)		5.7 x 18.9 x 8.7 (145 x 480 x 220)
Shipping Dimensions W x D x H (in) (mm)	22.4 x 27.6 x 6.5 (570 x 700 x 165)	22.4 x 29.9 x 6.5 (570 x 760 x 165)	9.1 x 17.7 x 12.8 (230 x 450 x 325)		9.1 x 22.4 x 12.8 (230 x 570 x 325)
Unit Weight, lb. (kg)	36.4 (16.5)	45.6 (20.7)	24.7 (11.2)	26.0 (11.8)	40.1 (18.2)
Shipping Weight, lb. (kg)	42.3 (19.2)	52.2 (23.7)	27.8 (12.6)	29.1 (13.2)	44.1 (20.0)
Input					
Voltage Input Range (with battery operation)	0 to 150 VAC				
Voltage Input Range (without battery operation)	75 to 146 VAC				
Input Voltage Measurement Tolerance	3%				
Nominal Voltage Setting	100 / 110 / 115 / 120 / 125 VAC				
High Line Buck to Battery	117 / 129 / 135 / 140 / 146 VAC				
High Line Battery to Buck	114 / 125 / 131 / 137 / 143 VAC				
High Line Normal to Buck	110 / 121 / 127 / 132 / 138 VAC				
High Line Buck to Normal	107 / 118 / 123 / 128 / 134 VAC				
Low Line Boost to Normal	93 / 102 / 107 / 112 / 116 VAC				
Low Line Normal to Boost	90 / 99 / 104 / 108 / 113 VAC				
Low Line Battery to Boost	80 / 88 / 92 / 96 / 100 VAC				
Low Line Boost to Battery	75 / 83 / 86 / 90 / 94 VAC				
Frequency Input Range	55 to 65 Hz (57 to 63 Hz Battery to Normal comeback)				
Internal Rear Panel Input Breaker	13 A	16 A	10 A	13 A	16 A
Input Surge Protection	ANSI C62.41 Category A, Level 3 1372J				
Input Power Cord	NEMA 5-15P, offset 90-degree type (3m attached)		NEMA 5-15P, offset 90-degree type (1.8m attached)		

MODEL	PSI5-1000RM1201U	PSI5-1500RM1201U	PSI5-750MT120	PSI5-1100MT120	PSI5-1500MT120
Output					
Output Voltages (on battery)	100 / 110/ 115 / 120 / 125 VAC (±1.5 on battery before alarm) user selectable (120 VAC is factory default)				
Output Frequency (on battery)	60 (default)/ 50 Hz ±1%				
Output Receptacles - not controllable	(3) NEMA 5-15R				
Output Receptacles - controllable	(2) NEMA 5-15R				(3) NEMA 5-15R
Transfer Time	Adjustable with User Setting 09 ST1: 4-6 ms typical, 10 ms max. (default). ST2: 6-8 ms typical, 11 ms max. ST3: 8-10 ms typical, 13 ms max.				
Output Waveform (on battery)	Pure Sinewave				
Output Overload Operation	100% — Alarm warning 110% — Alarm warning and shutdown after 10 seconds 120% — Alarm warning and immediate shutdown				
Protection	Electronic (overcurrent, short circuit w/ latching shutdown)				
AC Mode Efficiency	98%		96%		
Buck and Boost Mode Efficiency	93%				
Recharge Time	6 hours to recover to 90%		6-8 hours to recover to 90%		
Internal Battery					
Part Number	PSI5-10001UBATKIT	PSI5-15001UBATKIT	PSI5-750MTBATKIT	PSI5-1100MTBATKIT	PSI5-1500MTBATKIT
Protection	Electronic (overcurrent, short circuit with latching shutdown)				
Type	Valve-regulated lead-acid (VRLA) in compliance with UL 1989				
Quantity x Voltage x Ah	4 x 6V x 9 Ah	6 x 6V x 9 Ah	2 x 12V x 9 Ah	2 x 12V x 10 Ah	4 x 12V x 9 Ah
Environmental Requirements					
Operating Temperature, °F (°C)	32 to 104 (0 to 40)				
Operating Elevation, ft. (m)	0 to 9,942 (0 to 3,000 without derating) Operating temperature reduced 9 °F (5 °C) for each additional 1,640ft. (500m) of altitude				
Relative Humidity	20% to 90% non-condensing				
Storage Temperature, °F (°C)	5 to 122 (-15 to 50)				
Storage Relative Humidity	10% to 90% non-condensing				
Audible Noise	<45 dB		<45 dB @ Line mode < 55 dB @ Battery mode		

Table 5-3 PSI5 Specifications for LI Models

MODEL	PSI5-1500RT120LI	PSI5-2200RT120LI	PSI5-3000RT120LI	PSI5-1500MT120LI
Power Rating				
125 VAC Input	1500 VA, 1350 W, 12 A	1920 VA, 1920 W, 15.4 A	3000 VA, 2700 W, 24 A	1500 VA, 1350 W, 12A
120 VAC Input	1440 VA, 1350 W, 12 A	1920 VA, 1920 W, 16 A	2880 VA, 2700 W, 24 A	1440 VA, 1350 W, 12A
115 VAC Input	1380 VA, 1350 W, 12 A	1840 VA, 1840 W, 16 A	1380 VA, 2700 W, 24 A	1380 VA, 1350 W, 12A
110 VAC Input	1275 VA, 1147 W, 11.6 A	1632 VA, 1632 W, 14.8 A	2550 VA, 2295 W, 23.2 A	1275 VA, 1350 W, 11.6 A
100 VAC Input	1200 VA, 1147 W, 12 A	1600 VA, 1600 W, 16 A	2400 VA, 2295 W, 24 A	1200 VA, 1147 W, 12A
Dimensions and Weights				
Unit Dimensions W x D x H in (mm)	17.2 x 16.1 x 3.5 (438 x 410 x 88)	17.2 x 20.0 x 3.5 (438 x 510 x 88)	17.2 x 24.8 x 3.5 (438 x 630 x 88)	6.2 x 15.6 x 8.7 (158 x 397 x 220)
Shipping Dimensions W x D x H in (mm)	10.2 x 22.9 x 22.4 (258 x 582 x 570)	10.2 x 26.5 x 22.4 (258 x 672 x 570)	10.2 x 26.7 x 22.4 (258 x 782 x 570)	9.1 x 19.5 x 12.8 (230 x 495 x 325)
Unit Weight, lb. (kg)	28.4 (12.9)	39.7 (18.0)	53.6 (24.3)	28.0 (12.7)
Shipping Weight, lb. (kg)	42.1 (19.1)	53.8 (24.4)	67.9 (30.8)	31.2 (14.2)
Input				
Voltage Input Range (with battery operation)	0 to 150 VAC			
Voltage Input Range (without battery operation)	75 to 146 VAC			
Input Voltage Measurement Tolerance	3%			
Nominal Voltage Setting	100 / 110 / 115 / 120 / 125 VAC			
High Line Buck to Battery	117 / 129 / 135 / 140 / 146 VAC			
High Line Battery to Buck	114 / 125 / 131 / 137 / 143 VAC			
High Line Normal to Buck	110 / 121 / 127 / 132 / 138 VAC			
High Line Buck to Normal	107 / 118 / 123 / 128 / 134 VAC			
Low Line Boost to Normal	93 / 102 / 107 / 112 / 116 VAC			
Low Line Normal to Boost	90 / 99 / 104 / 108 / 113 VAC			
Low Line Battery to Boost	80 / 88 / 92 / 96 / 100 VAC			
Low Line Boost to Battery	75 / 83 / 86 / 90 / 94 VAC			
Frequency Input Range	55 to 65 Hz (57 to 63 Hz Battery to Normal comeback)			
Internal Rear Panel Input Breaker	16 A	20 A	30 A	16 A
Input Surge Protection	ANSI C62.41 Category A, Level 3 1372J			
Input Power Cord	NEMA 5-15P, offset 90-degree type (3 m attached)	NEMA L5-20P (3 m attached) NEMA L5-20 to 5-20P adapter cord (150 mm)	NEMA 5-30P (3 m attached)	NEMA 5-15P, offset 90-degree type (1.8 m attached)

MODEL	PSI5-1500RT120LI	PSI5-2200RT120LI	PSI5-3000RT120LI	PSI5-1500MT120LI
Output				
Output Voltages (on battery)	100 / 110/ 115 / 120 / 125 VAC (±1.5 on battery before alarm) user selectable (120 VAC is factory default)			
Output Frequency (on battery)	60 (default) / 50 Hz ±1%			
Output Receptacles - not controllable	(3) NEMA 5-15R	(3) NEMA 5-20R (1) NEMA L5-20R	(3) NEMA 5-15/20R, (1) NEMA L5-30R	(3) NEMA 5-15R
Output Receptacles - controllable	(3) NEMA 5-15R	(3) NEMA 5-20R	(3) NEMA 5-15/20R	(3) NEMA 5-15R
Transfer Time	Adjustable with User Setting 09 ST1: 4-6 ms typical, 10 ms max. (default). ST2: 6-8 ms typical, 11 ms max. ST3: 8-10 ms typical, 13 ms max.			
Output Waveform (on Battery)	Pure Sinewave			
Output Overload Operation	100% — Alarm warning 110% — Alarm warning and shutdown after 10 seconds 120% — Alarm warning and immediate shutdown			
Protection	Electronic (overcurrent, short circuit w/ latching shutdown)			
AC Mode Efficiency	97%			
Buck and Boost Mode Efficiency	94%			
Recharge Time (typical)	2 hours to recover to 100%	2 hours to recover to 100%	3 hours to recover to 100%	2 hours to recover to 100%
Internal Battery				
Part Number	PSI5-1500LIBATKIT	PSI5-2200LIBATKIT	PSI5-3000LIBATKIT	PSI5-1500LIBATKIT
Protection	Electronic (overcurrent, short circuit with latching shutdown)			
Type	LIFePO4 Battery in compliance with UL 1973 and UL 1642			
Quantity (total Wh)	1 (240Wh)	2 (384Wh)	3 (576Wh)	1 (240Wh)
Environmental Requirements				
Operating Temperature, °F (°C)	32 to 104 (0 to 40)			
Operating Elevation, ft. (m)	0 to 9,942 (0 to 3,000 without derating) Operating temperature reduced 9 °F (5 °C) for each additional 1,640ft. (500m) of altitude			
Relative Humidity	8% to 90% non-condensing			
Storage Temperature, °F (°C)	-5 to 122 (-15 to 50) without batteries 14 to 113 (-10 to 45) with batteries			
Storage Relative Humidity	0% to 90% non-condensing			
Audible Noise	<45 dB Line mode, <55 dB @ Battery mode			

5.1 Run Times

NOTE: Liebert® PSI5-1100/2200/3000/5000: When using 2 or more external battery cabinets (EBCs), the UPS load rating will be decreased by 20%. The % load graph on the LCD automatically adjusts to reflect this derating.

NOTE: Run times are approximate. They are based on new, fully charged batteries at a temperature of 25°C (77°F) with 100% resistive UPS loading.

Table 5-4 PSI5-800RT120

LOAD			INTERNAL BATTERY ONLY	NUMBER OF EXTERNAL BATTERY CABINETS					
				1	2	3	4	5	6
%	VA	W	MINUTES						
100	800	720	5.5	27	51	76	104	132	161
90	720	648	6.6	31	58	87	118	150	183
80	640	576	8.0	36	67	101	136	173	210
70	560	504	9.9	42	79	118	160	202	246
60	480	432	12.5	51	96	144	193	244	295
50	400	360	16.2	64	119	178	239	300	363
40	320	288	21.7	84	155	230	306	384	462
30	240	216	30.5	116	213	313	415	517	620
20	160	144	44.4	167	303	441	581	721	862
10	80	72	85.6	313	552	79'2	1034	1276	1519

Table 5-5 PSI5-1100RT120

LOAD			NUMBER OF EXTERNAL BATTERY CABINETS		LOAD			NUMBER OF EXTERNAL BATTERY CABINETS				
			INTERNAL BATTERY ONLY	1				2	3	4	5	6
%	VA	W	MINUTES		%	VA	W	MINUTES				
100	1100	990	4.6	20	100	880	792	48	71	95	120	147
90	990	891	5.6	23	90	79'2	713	54	81	109	138	167
80	880	79'2	6.8	27	80	704	634	63	94	126	159	193
70	770	693	8.5	32	70	616	554	75	111	149	188	228
60	660	594	11.0	39	60	528	475	91	134	179	226	273
50	550	495	13.7	48	50	440	396	113	167	222	279	336
40	440	396	18.7	63	40	352	317	147	216	286	357	429
30	330	297	27.0	89	30	264	238	205	298	393	488	584
20	220	198	40.1	131	20	176	158	294	423	553	684	816
10	110	99	87.4	278	10	88	79	545	774	1003	1233	1463

Table 5-6 PSI5-1500RT120 & PSI5-1500RT120TAA

LOAD			INTERNAL BATTERY ONLY	NUMBER OF EXTERNAL BATTERY CABINETS					
				1	2	3	4	5	6
%	VA	W	MINUTES						
100	1500	1350	6.3	30	56	84	114	145	176
90	1350	1215	7.5	34	64	96	130	165	200
80	1200	1080	9.1	40	74	111	150	191	231
70	1050	945	11.2	47	87	131	177	224	271
60	900	810	14.1	57	106	158	213	268	324
50	750	675	18.1	71	131	196	262	329	396
40	600	540	24.2	'93	172	254	338	423	508
30	450	405	34.2	1130	237	348	461	574	687
20	300	270	50.4	1190	341	496	651	807	964
10	150	135	110.9	:198	695	994	1294	1594	1895

Table 5-7 PSI5-2200RT120 & PSI5-2200RT120TAA

LOAD			NUMBER OF EXTERNAL BATTERY CABINETS	
			INTERNAL BATTERY ONLY	1
%	VA	W	MINUTES	
100	1920	1920	4.9	27
90	1728	1728	5.9	32
80	1536	1536	7.2	37
70	1344	1344	8.8	44
60	1152	1152	10.9	53
50	960	960	13.9	63
40	768	768	18.7	87
30	576	576	27.1	123
20	384	384	40.1	177
10	192	192	87.9	343

LOAD			NUMBER OF EXTERNAL BATTERY CABINETS				
			2	3	4	5	6
%	VA	W	MINUTES				
100	1536	1536	72	111	152	194	237
90	1382.4	1382	83	127	174	222	270
80	1228.8	1229	96	147	201	255	310
70	1075.2	1075	113	173	235	298	362
60	921.6	922	137	208	281	356	430
50	768	768	164	248	334	421	508
40	614.4	614	220	330	442	554	667
30	460.8	461	303	450	598	748	897
20	307.2	307	423	624	825	1027	1230
10	153.6	154	808	1174	1542	1909	2277

Table 5-8 PSI5-3000RT120 & PSI5-3000RT120TAA

LOAD			NUMBER OF EXTERNAL BATTERY CABINETS		LOAD			NUMBER OF EXTERNAL BATTERY CABINETS				
			INTERNAL BATTERY ONLY	1				2	3	4	5	6
%	VA	W	MINUTES		%	VA	W	MINUTES				
100	3000	2700	5.6	22	100	2400	2160	54	81	109	138	167
90	2700	2430	6.7	26	90	2160	1944	62	92	124	157	190
80	1536	2160	8.1	30	80	1920	1728	72	107	143	181	219
70	1344	1890	10.1	36	70	1680	1512	85	126	169	213	258
60	1152	1620	12.8	43	60	1440	1296	103	152	203	255	308
50	960	1350	16.7	45	50	1200	1080	129	189	251	315	378
40	768	1080	22.4	72	40	960	864	168	245	324	404	484
30	576	810	32.2	101	30	720	648	233	338	444	551	658
20	384	540	46.3	145	20	480	432	327	470	613	758	902
10	192	270	103.2	313	10	240	216	653	923	1195	1466	1738

Table 5-9 PSI5-5000RT208

LOAD			NUMBER OF EXTERNAL BATTERY CABINETS		LOAD			NUMBER OF EXTERNAL BATTERY CABINETS				
			INTERNAL BATTERY ONLY	1				2	3	4	5	6
%	VA	W	MINUTES		%	VA	W	MINUTES				
100	4250	3825	3	15	100	4000	3600	30	45	60	76	93
90	3825	3443	4	17	90	3600	3240	35	51	69	87	106
80	3400	3060	5	20	80	3200	2880	40	59	79	100	122
70	2975	2678	6	24	70	2800	2520	47	70	93	118	144
60	2550	2295	8	29	60	2400	2160	57	84	113	142	173
50	2125	1913	10	36	50	2000	1800	70	104	139	175	212
40	1700	1530	14	48	40	1600	1440	92	136	181	227	274
30	1275	1178	21	67	30	200	1080	128	188	249	311	374
20	850	765	34	106	20	800	720	199	288	378	470	560
10	425	383	69	215	10	400	360	358	511	665	819	974

Table 5-10 PSI5-1000RM1201U

LOAD			MINUTES
%	VA	W	
100	1000	900	5.1
90	900	810	5.8
80	800	720	6.9
70	700	630	8.3
60	600	540	10.4
50	500	450	13.4
40	400	360	18.2
30	300	270	26.9
20	200	180	41.9
10	100	90	90.6

Table 5-11 PSI5-1500RM1201U

LOAD			MINUTES
%	VA	W	
100	1500	1350	5.1
90	1350	1215	5.9
80	1200	1080	7.1
70	1050	945	8.5
60	900	810	10.6
50	750	675	13.5
40	600	540	18.4
30	450	405	26.9
20	300	270	41.6
10	150	135	91.2

Table 5-12 PSI5-750MT120

LOAD			MINUTES
%	VA	W	
100	750	675	6.1
90	675	607.5	7.3
80	600	540	8.8
70	525	472.5	10.9
60	450	405	13.8
50	375	337.5	17.7
40	300	270	23.5
30	225	202.5	33.0
20	150	135	48.0
10	75	67.5	92.5

Table 5-13 PSI5-1100MT120

LOAD			MINUTES
%	VA	W	
100	1100	990	4.6
90	990	891	5.6
80	880	792	6.8
70	770	693	8.5
60	660	594	11.0
50	550	495	13.7
40	440	396	18.8
30	330	297	27.5
20	220	198	45.5
10	110	99	107.0

Table 5-14 PSI5-1500MT120

LOAD			MINUTES
%	VA	W	
100	1500	1350	6.3
90	1350	1215	7.5
80	1200	1080	9.1
70	1050	945	11.2
60	990	810	14.1
50	750	675	18.1
40	600	540	24.2
30	450	405	34.2
20	300	270	50.4
10	150	135	110.9

Table 5-15 PSI5-1500RT120LI

LOAD			MINUTES
%	VA	W	
100	1500	1350	7.5
90	1350	1215	8.9
80	1200	1080	10.3
70	1050	945	12.1
60	900	810	14.6
50	750	675	17.7
40	600	540	22.8
30	450	405	30.6
20	300	270	45.3
10	150	135	89.0

Table 5-16 PSI5-2200RT120LI

LOAD			MINUTES
%	VA	W	
100	1920	1920	8.6
90	1728	1728	9.9
80	1536	1536	11.5
70	1344	1344	13.5
60	1152	1152	16.1
50	960	960	19.0
40	768	768	24.5
30	576	576	33.2
20	384	384	48.1
10	192	192	93.6

Table 5-17 PSI5-3000RT120LI

LOAD			MINUTES
%	VA	W	
100	3000	2700	8.9
90	2700	2430	10.5
80	2400	2160	11.9
70	2100	1890	13.9
60	1800	1620	16.5
50	1500	1350	20.0
40	1200	1080	25.5
30	900	810	34.2
20	600	540	49.1
10	300	270	96.6

Table 5-18 PSI5-1500MT120LI

LOAD			MINUTES
%	VA	W	
100	1500	1350	7.5
90	1350	1215	8.9
80	1200	1080	10.3
70	1050	945	12.1
60	900	810	14.6
50	750	675	17.7
40	600	540	22.8
30	450	405	30.6
20	300	270	45.3
10	150	135	89.0

This page is intentionally left blank.

Connect with Vertiv on Social Media

http://www.facebook.com/Vertiv

http://www.instagram.com/Vertiv

http://www.linkedin.com/company/Vertiv

http://www.twitter.com/Vertiv/

SL-23314_REV9_10_20