JUNIPER NETWORKS | Engineering Simplicity

ACX7348 Cloud Metro Router Hardware Guide

Published
2024-01-03

Juniper Networks, Inc.
1133 Innovation Way
Sunnyvale, California 94089
USA
408-745-2000
www.juniper.net

Juniper Networks, the Juniper Networks logo, Juniper, and Junos are registered trademarks of Juniper Networks, Inc. in the United States and other countries. All other trademarks, service marks, registered marks, or registered service marks are the property of their respective owners.

Juniper Networks assumes no responsibility for any inaccuracies in this document. Juniper Networks reserves the right to change, modify, transfer, or otherwise revise this publication without notice.

ACX7348 Cloud Metro Router Hardware Guide
Copyright © 2024 Juniper Networks, Inc. All rights reserved.

The information in this document is current as of the date on the title page.

YEAR 2000 NOTICE

Juniper Networks hardware and software products are Year 2000 compliant. Junos OS has no known time-related limitations through the year 2038. However, the NTP application is known to have some difficulty in the year 2036.

END USER LICENSE AGREEMENT

The Juniper Networks product that is the subject of this technical documentation consists of (or is intended for use with) Juniper Networks software. Use of such software is subject to the terms and conditions of the End User License Agreement ("EULA") posted at https://support.juniper.net/support/eula/. By downloading, installing or using such software, you agree to the terms and conditions of that EULA.

Table of Contents

About This Guide | viii

1 Fast Track: Initial Installation

Fast Track to Rack Installation and Power | 2

- Install the ACX7348 in a Rack | 2
- Connect to Power | 3

2 Overview

ACX7348 System Overview | 7

- ACX7348 Router Description | 7
- Benefits of ACX7348 Routers | 8
- ACX7348 Field-Replaceable Units | 8
- ACX7348 Router Component Redundancy | 9
- ACX7348 System Software Overview | 10

ACX7348 Chassis | 10

- ACX7348 Chassis Description | 10
- ACX7348 Physical Specifications | 15

Cooling System and Airflow in ACX7348 Routers | 16

- Fan Trays | 17
- Fan Status LEDs | 17
- Airflow | 19
- Air Filter Unit | 20
- Power Supply Cooling System | 21

ACX7348 Power System | 21

- ACX7348 AC Power Supply Module Description | 22
- ACX7348 DC Power Supply Module Description | 27

ACX7348 Routing Engine | 31

ACX7300 Flexible PIC Concentrators | 36

ACX7K3-FPC-2CD4C | **37**

ACX7K3-FPC-16Y | **40**

FPC LEDs | **42**

3 **Site Planning, Preparation, and Specifications**

ACX7348 Site Guidelines and Requirements | 45

Environmental Requirements and Specifications for ACX7348 Routers | **45**

General Site Guidelines | **46**

Site Electrical Wiring Guidelines | **46**

ACX7348 Grounding Cable and Lug Specifications | **48**

Clearance Requirements for Airflow and Hardware Maintenance of ACX7348 Routers | **49**

ACX7348 Rack and Cabinet Requirements | 50

Rack Requirements for ACX7348 Routers | **50**

Cabinet Requirements for ACX7348 Routers | **51**

ACX7348 Network Cable and Transceiver Planning | 53

Determining Transceiver Support for ACX7348 | **53**

Cable and Connector Specifications for ACX7348 | **59**

Calculating Power Budget and Power Margin for Fiber-Optic Cables | **67**

How to Calculate Power Budget for Fiber-Optic Cables | **67**

How to Calculate Power Margin for Fiber-Optic Cables | **68**

ACX7348 Management and Console Port Specifications and Pinouts | 70

Management Cable Specifications for ACX7348 Routers | **70**

Management Port Connector Pinout Information for ACX7348 Routers | **71**

Console Port Connector Pinout on ACX7348 Routers | **71**

4 **Initial Installation and Configuration**

Unpack an ACX7348 Router | 74

Unpack the ACX7348 Shipping Pallet | 74

Compare the ACX7348 Order to the Packing List | 75

Install the ACX7348 in a Rack | 76

Mount an ACX7348 in a Two-Post Rack | 76

Mount an ACX7348 in a Four-Post Rack | 78

Connect ACX7348 to Power | 83

Connect Earth Ground to ACX7348 Routers | 83

Connect AC Power to an ACX7348 Router | 85

Connect DC Power to an ACX7348 Router | 87

Connect ACX7348 to External Devices | 91

Connect an ACX7348 Router to a Management Console | 91

Connect an ACX7348 Router to a Network for Out-of-Band Management | 92

Connect to 1-PPS and 10-MHz Timing Devices | 93

Connect an ACX7348 Router to a GNSS Antenna | 94

Perform Initial Software Configuration for ACX7348 Routers | 97

5 **Maintaining Components**

ACX7348 Fan Tray Maintenance | 103

Remove a Fan Tray from the ACX7348 Router | 103

Remove a Fan Tray from the Rear of the Chassis | 104

Remove a Fan Tray from the Front of the Chassis | 104

Install a Fan Tray in the ACX7348 Router | 105

ACX7348 Air Filter Unit Maintenance | 106

Install Air Filter Unit in a Two-Post Rack | 107

Install Air Filter Unit in a Four-Post Rack | 109

Replace the Air Filter | 112

Remove the Air Filter | 112

Install the Air Filter | 113

ACX7348 Power Supply Module Maintenance | 114

Remove an ACX7348 AC Power Supply Module | **114**

Install an ACX7348 AC Power Supply Module | **115**

Remove an ACX7348 DC Power Supply Module | **117**

Install an ACX7348 DC Power Supply Module | **119**

ACX7348 Routing Engine Maintenance | 122

Remove the Routing Engine from the ACX7348 Router | **122**

Install the Routing Engine in the ACX7348 Router | **123**

ACX7348 Flexible PIC Concentrator Maintenance | 124

Remove a Flexible PIC Concentrator from the ACX7348 Router | **125**

Install a Flexible PIC Concentrator in the ACX7348 Router | **127**

6 **Troubleshooting Hardware**

Troubleshooting the ACX7348 Router | 130

Alarm Types and Severity Classes on ACX7348 Routers | **130**

7 **Contacting Customer Support and Returning the Chassis or Components**

Returning an ACX7348 Chassis or Components | 133

How to Return a Hardware Component to Juniper Networks, Inc. | **133**

How to Locate the Serial Number on an ACX7348 Router or Component | **134**

List the Chassis and Component Details Using the CLI | **135**

Locate the Chassis Serial Number ID Label on an ACX7348 Router | **135**

Locate the Serial Number ID Label on an ACX7348 Fan Tray | **136**

Locate the Serial Number ID Label on an ACX7348 Power Supply Module | **136**

Locate the Serial Number ID Label on an ACX7348 Routing Engine | **137**

Locate the Serial Number ID Label on an ACX7348 Flexible PIC Concentrator | **138**

Contact Customer Support to Obtain Return Material Authorization | **139**

Guidelines for Packing and Shipping Hardware Components | **140**

8 **Safety and Compliance Information**

Safety Information | 142

Compliance Statements for NEBS | 142

Compliance Statements for EMC Requirements | 142

Compliance Standards for ACX7348 Routers | 144

About This Guide

Use this guide to install hardware and perform initial software configuration, routine maintenance, and troubleshooting for the ACX7348 Cloud Metro Router.

After completing the installation and basic configuration procedures covered in this guide, refer to the Junos OS Evolved documentation for information about further software configuration.

1
CHAPTER

Fast Track: Initial Installation

Fast Track to Rack Installation and Power | 2

Fast Track to Rack Installation and Power

SUMMARY

This procedure guides you through the simplest steps for the most common installation to get your ACX7348 router in a rack and connect it to power. Have more complex installation needs? See "Install the ACX7348 in a Rack" on page 76 .

IN THIS SECTION

- Install the ACX7348 in a Rack | 2
- Connect to Power | 3

Install the ACX7348 in a Rack

You can install an ACX7348 router into a two-post rack, four-post rack, or a cabinet. We'll walk you through the steps to install an AC-powered ACX7348 router in a two-post rack.

Before you install, review the following:

- "ACX7348 Site Guidelines and Requirements" on page 45
- General Safety Guidelines and Warnings

1. Wrap and fasten one end of the ESD wrist strap around your bare wrist, and connect the other end of the strap to the ESD point on the device.
2. Grasp both sides of the router, lift the router, and position it in the rack, aligning the holes of the mounting brackets with the holes in the front post of the rack. Align the bottom hole in both the mounting brackets with a hole in each rack post, making sure that the chassis is level.
3. Secure the mounting brackets to the rack by using four screws appropriate for your rack. Tighten the screws.

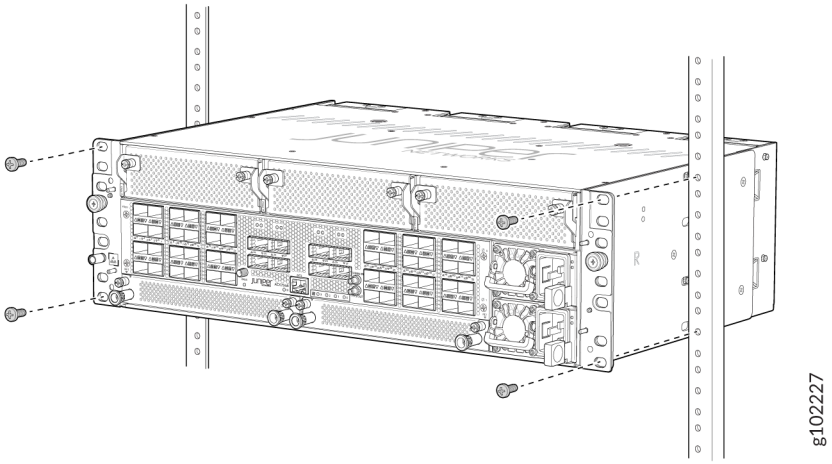

4. Ensure that the chassis is level by verifying that all screws on one side of the rack align with the screws on the other side.

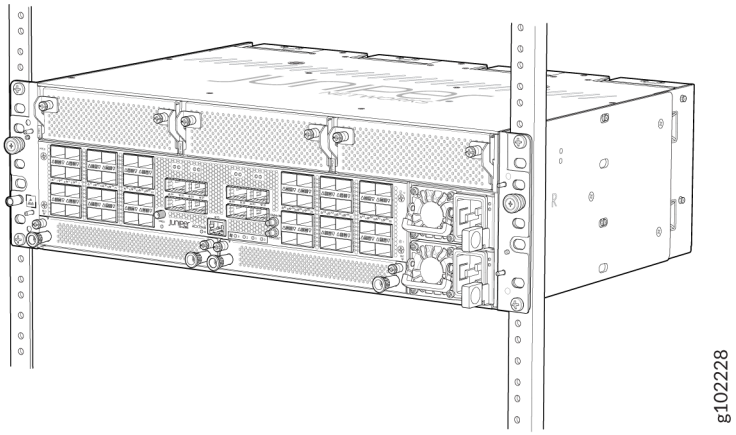

Connect to Power

IN THIS SECTION

- Ground the ACX7348 Router | 4
- Connect the Power Cord and Power On the Router | 4

To connect the ACX7348 router to AC power, you must do the following:

Ground the ACX7348 Router

To connect AC power to an ACX7348 router:

1. Verify that a licensed electrician has attached the cable lug that is provided with the router to the grounding cable.
2. Ensure that all grounding surfaces are clean and brought to a bright finish before you make grounding connections.
3. Connect the grounding cable to a proper earth ground.
4. Place the grounding cable lug over the two-hole protective grounding terminal on the rear side of the chassis.

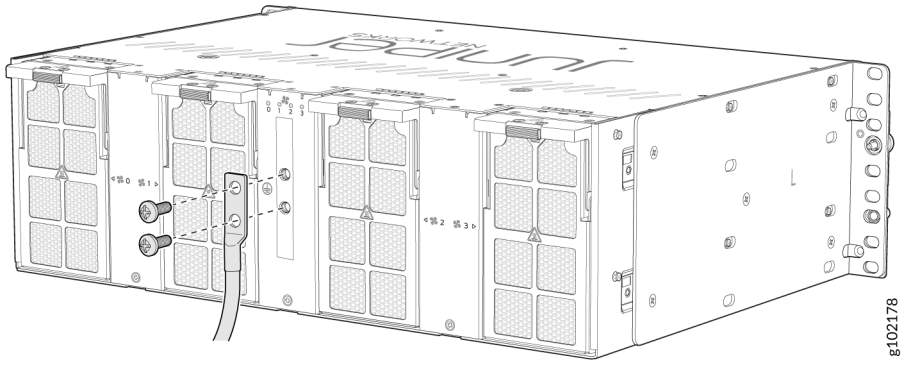

5. Secure the grounding cable lug with the screws.
6. Dress the grounding cable and verify that it does not touch or block access to router components, and that it does not drape where people could trip over it.

Connect the Power Cord and Power On the Router

For information about the supported AC power cord specifications, see "ACX7348 AC Power Cord Specifications" on page 25 .

To connect an AC power cord to the ACX7348 router:

1. Wrap and fasten one end of the ESD grounding strap around your bare wrist, and connect the other end of the strap to the ESD point on the chassis.
2. Power off the AC input appliance inlet on the source power supply.

3. Connect the power cord to the power source outlet.

> **NOTE**: Each power supply module (PSM) must be connected to a dedicated AC power feed and a dedicated customer-site 2-pole circuit breaker. We recommend that you use a dedicated customer-site circuit breaker rated for 16 A, 250 VAC or as required by local code.

4. Press the small tab on the power cord retainer strip to loosen the loop. Slide the loop until you have enough space to insert the power cord coupler into the inlet.
5. Insert the power cord coupler firmly into the inlet.
6. Slide the loop toward the PSM until it is snug against the base of the coupler.
7. Press the tab on the loop and draw out the loop into a tight circle.
8. Route the power cord appropriately. Verify that the power cord does not block the air exhaust and access to router components, or drape where people could trip over it.
9. Power on the source power supply.
10. Repeat Step "2" on page 4 through Step "9" on page 5 for connecting the other PSM to power.

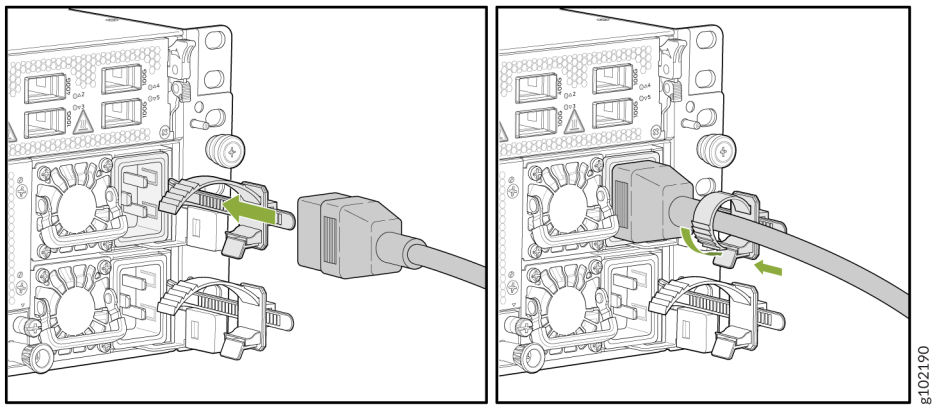

2

CHAPTER

Overview

ACX7348 System Overview | 7

ACX7348 Chassis | 10

Cooling System and Airflow in ACX7348 Routers | 16

ACX7348 Power System | 21

ACX7348 Routing Engine | 31

ACX7300 Flexible PIC Concentrators | 36

ACX7348 System Overview

SUMMARY

Learn about the ACX7348 cloud metro router, its hardware components, and the Junos OS Evolved software that runs the ACX7348 router.

IN THIS SECTION

- ACX7348 Router Description | 7
- Benefits of ACX7348 Routers | 8
- ACX7348 Field-Replaceable Units | 8
- ACX7348 Router Component Redundancy | 9
- ACX7348 System Software Overview | 10

ACX7348 Router Description

The Juniper Networks® ACX7348 Cloud Metro Router is a multiservice platform from the ACX7300 series that addresses the growing demands of metro applications. With a compact 3-U semi-fixed form factor, this industrial-rated router offers an aggregation solution that gives cloud providers and service providers the performance and scalability needed as networks grow.

The ACX7348 router provides 1-Gigabit Ethernet (GbE) through 400GbE port flexibility and a throughput of 2.4 Tbps. It has a fixed Flexible PIC Concentrator (FPC), dual Routing Engines, three bays for pluggable interface modules, redundant power supply modules (AC or DC), and four fan trays (two fans per tray). The ACX7348 router supports the following pluggable FPCs:

- ACX7K3-FPC-2CD4C—Two 400GbE and four 100GbE ports
- ACX7K3-FPC-16Y—Sixteen 50GbE ports

The ACX7348 router runs the Junos OS Evolved cloud-optimized operating system. It provides several capabilities that include support for the latest protocol and traffic engineering technologies, enhanced security, and precision timing for mobile backhaul applications. You can use these capabilities and features to create converged, virtualized, and automated architectures to address the rapid growth of 5G, IoT, and the cloud.

Figure 1: AC-Powered ACX7348 Router

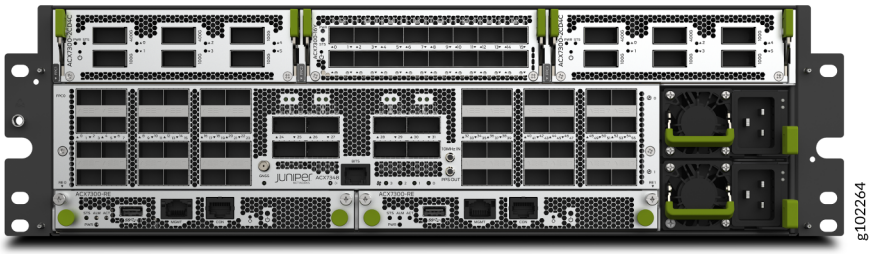

Benefits of ACX7348 Routers

- **Compact and hardened cloud-era platform**—Has a temperature-hardened and compact 3-U form factor that enables you to address a broad range of industrial applications.
- **Always-on infrastructure**—Provides full hardware redundancy for the Routing Engines and power supply modules (PSMs) to enable you to meet stringent service-level agreements (SLAs).
- **Ease of deployment**—Features a toolless setup and telescopic rails for a user-friendly installation, operation, and maintenance of the chassis.
- **Next-generation capabilities**—Supports next-generation protocols including segment routing, segment routing for IPv6 (SRv6), MPLS, and Ethernet VPN--Virtual Extensible LAN (EVPN-VXLAN).
- **Media Access Control Security (MACsec) capabilities**—Provides data plane security with inline MACsec support. MACsec is supported on all ports except the eight QSFP28 ports on the fixed FPC.
- **High-power ZR/ZR+ transceiver support**—Leverages an efficient thermal design to enable you to use unrestricted high-power ZR/ZR+ transceivers across all supporting ports.

ACX7348 Field-Replaceable Units

Field-replaceable units (FRUs) are router components you can replace at the customer site. Replacing most FRUs requires minimal router downtime. The ACX7348 router uses the following types of FRUs:

- Hot-insertable and hot-removable—You can remove and replace these components without powering off the router or disrupting the routing function.
- Hot-pluggable—You can remove and replace these components without powering off the router, but the routing function is interrupted until you replace the component.

Table 1: FRUs in an ACX7348 Router

FRU	Type
Power supply modules (PSMs)	Hot-insertable and hot-removable
Fan trays	Hot-insertable and hot-removable
Air filter	Hot-insertable and hot-removable
Routing Engines	Hot-pluggable
Flexible PIC Concentrators (FPCs)	Hot-pluggable We recommend that you take the FPCs offline before removing them. You can take FPCs offline by using the **request chassis fpc slot *slot-number* offline** command.
Optical transceivers	Hot-pluggable

ACX7348 Router Component Redundancy

The following hardware components provide redundancy on ACX7348 routers:

- **Routing Engines**—A redundant system on an ACX7348 consists of two Routing Engines that are available as field-replaceable units (FRUs). One Routing Engine functions as the primary and the other functions as the backup.
- **Power supply modules (PSMs)**—You can install up to two PSMs on ACX7348 routers to provide full power, 1+1 redundancy to the device. Each PSM provides power to all components in the router. If one PSM fails, or if you remove one PSM, the second PSM balances the electrical load without interruption.

ACX7348 System Software Overview

The ACX7348 router runs Junos OS Evolved, which provides Layer 2 and Layer 3 switching, routing, and security services. Junos OS Evolved runs natively on Linux and has direct access to all Linux utilities and operations. It has a modular design that supports upgrades on a component-by-component basis without a system reboot. Only those components that are changed are restarted. Junos OS Evolved is easily portable, and it requires minimal effort to make it work on any platform. Junos OS Evolved has a modernized infrastructure, which ensures high availability, portability, faster innovation, and simplified upgrades.

For information about features supported on ACX Series routers, see Feature Explorer.

ACX7348 Chassis

SUMMARY

Learn about the ACX7348 router chassis, the field replaceable units (FRUs), and physical specifications of the router and the FRUs.

IN THIS SECTION

- ACX7348 Chassis Description | 10
- ACX7348 Physical Specifications | 15

ACX7348 Chassis Description

IN THIS SECTION

- Fixed FPC | 12
- Timing Ports | 13

The router chassis is a rigid sheet metal structure that houses all the router components. The ACX7348 router has a fixed Flexible PIC Concentrator (FPC), dual Routing Engines, three bays for pluggable FPCs, redundant AC or DC power supply modules (PSMs), and four fan trays (two fans per tray).

Figure 2 on page 11 shows the front of the chassis configured with two Routing Engines. The chassis measures 5.21 in. (13.23 cm) high, 16.92 in. (42.97 cm) wide, and 11.41 in. (28.98 cm) deep. The chassis installs in a standard 800-mm deep open rack, 19-in. equipment racks, or telco open-frame racks. For more information about the physical specifications of the router and its components, see Table 5 on page 15 .

Figure 2: Front View of an AC-Powered ACX7348 Router

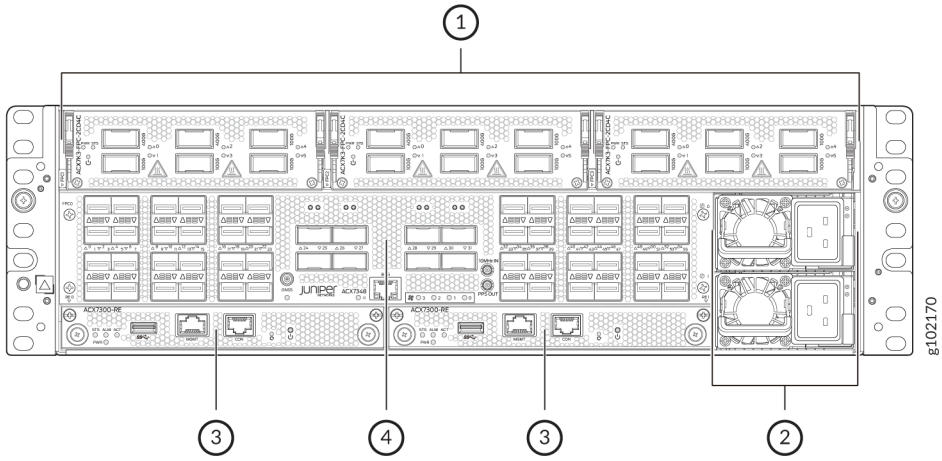

1– ACX7300-FPC-2CD4C FPC	3– Routing Engine
2– AC PSMs	4– Fixed FPC

Figure 3: Rear View of an ACX7348 Router

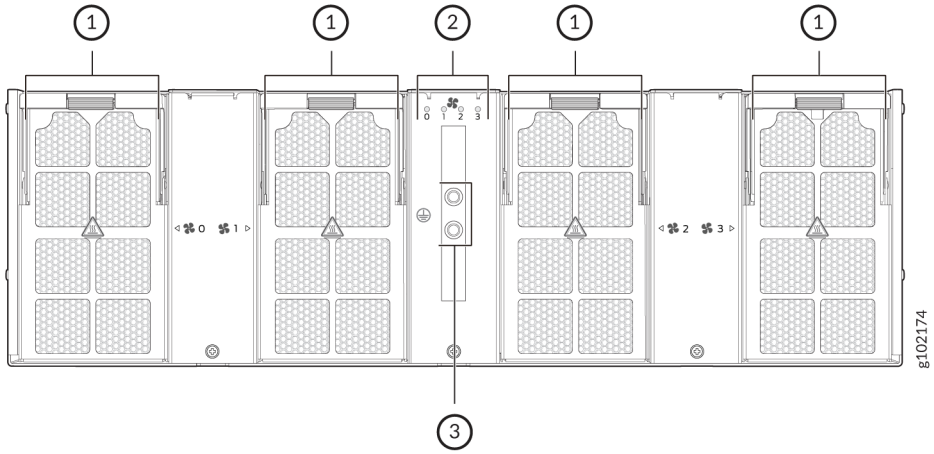

1– Fan Tray	3– Protective Grounding Terminal

2– Fan Tray LEDs	

Fixed FPC

The ACX7348 router has a fixed flexible PIC concentrator (FPC) that has 48 small form-factor pluggable 28 (SFP28) ports with MACsec capabilities and 8 quad small form-factor pluggable 28 (QSFP28) ports. Table 2 on page 12 shows the port speeds that the fixed FPC supports.

Figure 4: Fixed FPC

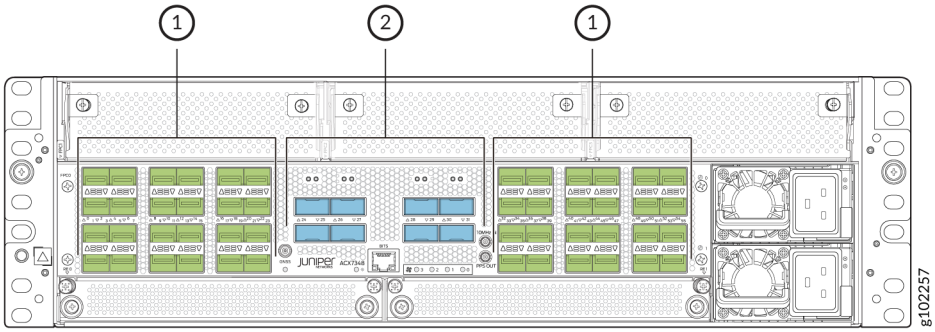

1– Forty-eight 1GbE/10GbE/25GbE SFP28 ports	2– Eight 40GbE/100GbE QSFP28 ports

Table 2: Ethernet Port Rates on the Fixed FPC

Native Port Speed	Port Number	Total number of ports
1GbE	0–23 and 32–55	48
10GbE	0–23 and 32–55	48
25GbE	0–23 and 32–55	48
40GbE	24–31 **NOTE**: Each 40GbE port supports 4x10GbE breakout option.	8

Table 2: Ethernet Port Rates on the Fixed FPC *(Continued)*

Native Port Speed	Port Number	Total number of ports
100GbE	24–31 **NOTE**: Each 100GbE port supports 4x25GbE breakout option.	8

System LED on the Front Panel

One bicolor LED below the device label (**ACX7348**) indicates the status of the router.

Table 3: System LED on the Front Panel

Color	State	Description
Green	Blinking	System has no primary Routing Engine.
	On steadily	The system is functioning normally.
Red	Blinking	One or more fans are not installed in the router before the software is up and running.
	On steadily	The fixed FPC has a power-related fault.

Timing Ports

Figure 5 on page 14 lists the components on the ACX7348 router's timing ports.

Figure 5: Timing Ports

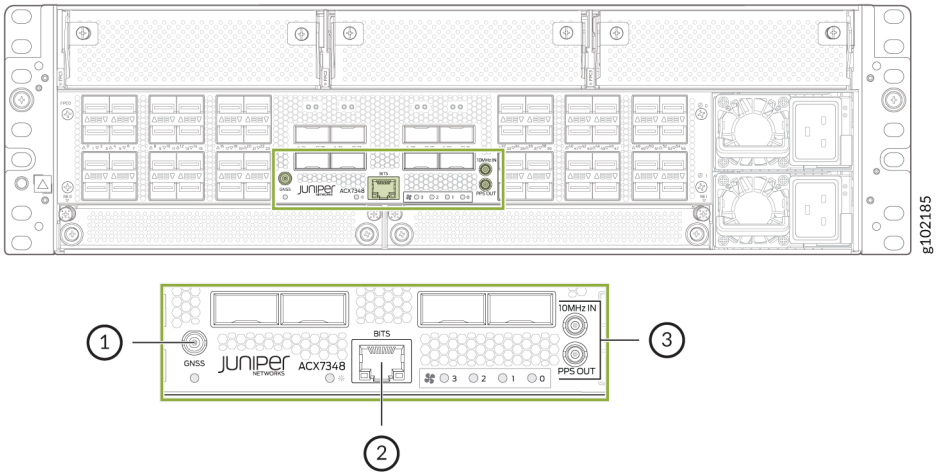

1– **GNSS** port	3– **10MHz** (I/O), **1PPS** (OUT) port
2– **BITS** port	

Here's a definition of the ports and labels on the timing ports. See Table 4 on page 14 for a description of the timing ports LED indicators.

- GNSS antenna port—Connects to a GNSS antenna.
- BITS—Building-integrated timing supply (BITS) external clocking interface for connecting to external clocking devices.
- 10MHz (I/O)—10-MHz input and output clocking port for connecting to external clock signal sources. The clocking port synchronizes clock inputs based on the clock's priority.
- PPS—1-pulse per second (PPS) output connector for connecting to external clock signal sources. The clocking port synchronizes clock inputs based on the clock's priority.

Table 4: Timing Ports LEDs on the ACX7348 Chassis

LED	Color	State	Description
GNSS	Unlit	Off	GNSS signal is not locked.
	Green	On steadily	GNSS signal is locked.
BITS	Green	On steadily	Clock is active.

Table 4: Timing Ports LEDs on the ACX7348 Chassis *(Continued)*

LED	Color	State	Description
	Yellow	On steadily	Loss of clock.

ACX7348 Physical Specifications

Table 5: ACX7348 Router Chassis and Component Physical Specifications

Description	Weight	Height	Width	Depth
ACX7348 chassis	Chassis without FRUs: 25.53 lb (11.58 kg)	5.21 in. (13.23 cm)	16.92 in. (42.97 cm)	11.41 in. (28.98 cm)
Routing Engine	2.14 lb (0.97 kg)	0.88 in. (2.23 cm)	6.75 in. (17.14 cm)	8.33 in. (21.15 cm)
ACX7300-FPC-2CD4C	2.13 lb (0.96 kg)	1.65 in. (4.19 cm)	5.40 in. (13.71 cm)	7.83 in. (19.88 cm)
ACX7300-FPC-16Y	2.08 lb (0.94 kg)	1.65 in. (4.19 cm)	5.40 in. (13.71 cm)	7.83 in. (19.88 cm)
AC power supply module	2.43 lb (1.10 kg)	1.53 in. (3.88 cm)	2.89 in. (7.34 cm)	7.28 in. (18.49 cm)
DC power supply module	2.24 lb (1.01 kg)	1.53 in. (3.88 cm)	2.89 in. (7.34 cm)	7.28 in. (18.49 cm)
Fan tray	1.38 lb (0.62 kg)	5.07 in. (12.87 cm)	2.81 in. (7.13 cm)	3.04 in. (7.72 cm)
Routing Engine blank	0.21 lb (0.09 kg)	0.90 in. (2.28 cm)	6.75 in. (17.14 cm)	1.00 in. (2.54 cm)

Table 5: ACX7348 Router Chassis and Component Physical Specifications *(Continued)*

Description	Weight	Height	Width	Depth
FPC blank	0.54 lb (0.24 kg)	1.65 in. (4.19 cm)	5.40 in. (13.71 cm)	2.95 in. (7.49 cm)

Cooling System and Airflow in ACX7348 Routers

SUMMARY

Learn about the cooling system components in ACX7348 routers.

IN THIS SECTION

- Fan Trays | **17**
- Fan Status LEDs | **17**
- Airflow | **19**
- Air Filter Unit | **20**
- Power Supply Cooling System | **21**

The cooling system components work together to keep all router components within the acceptable temperature range.

When the router operates normally, the fans function at lower than full speed. If a fan fails or the ambient temperature rises above a threshold, the router's cooling system automatically adjusts the speed of the remaining fans to keep the temperature within the acceptable range. If the maximum temperature specification is exceeded and the system cannot be adequately cooled, the router shuts down some or all of the hardware components.

The cooling system consists of the following components:

- " Fan Trays" on page 17
- "Airflow" on page 19
- "Power Supply Cooling System" on page 21

Fan Trays

The ACX7348 router has four hot-insertable and hot-removable field-replaceable fan trays installed at the rear of the router (See Figure 6 on page 17). Each fan tray contains two fans.

Figure 6: Fan Tray

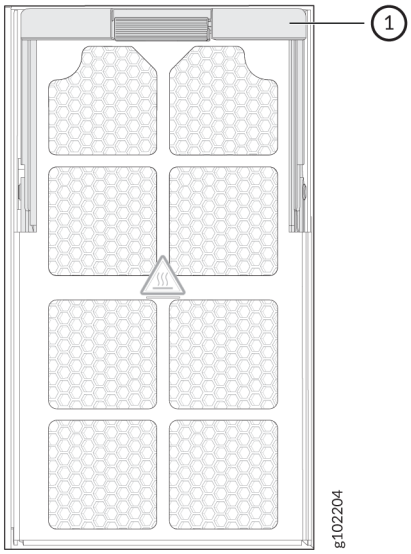

1. Fan tray ejector lever

NOTE: The ACX7348 router must operate with all the four fan trays installed. If you need to replace a faulty fan tray, you must replace the fan tray within three minutes.

Fan Status LEDs

Each fan has one bicolor LED. The fan LEDs are located on the front and the rear of the router.

Figure 7: Fan Status LEDs on the Front of the Router

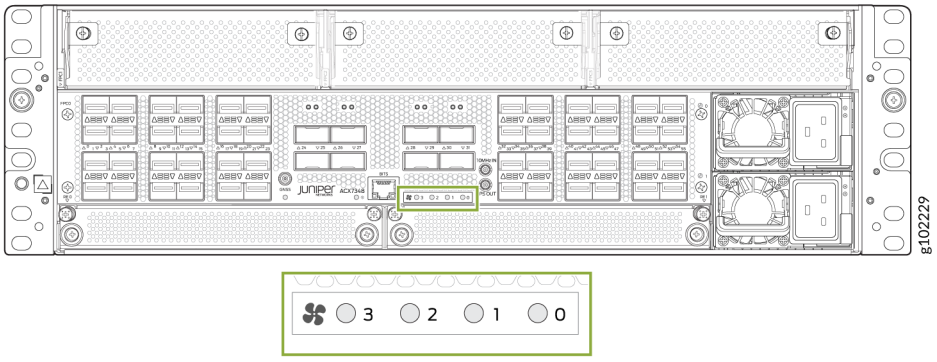

Figure 8: Fan Status LEDs on the Rear of the Router

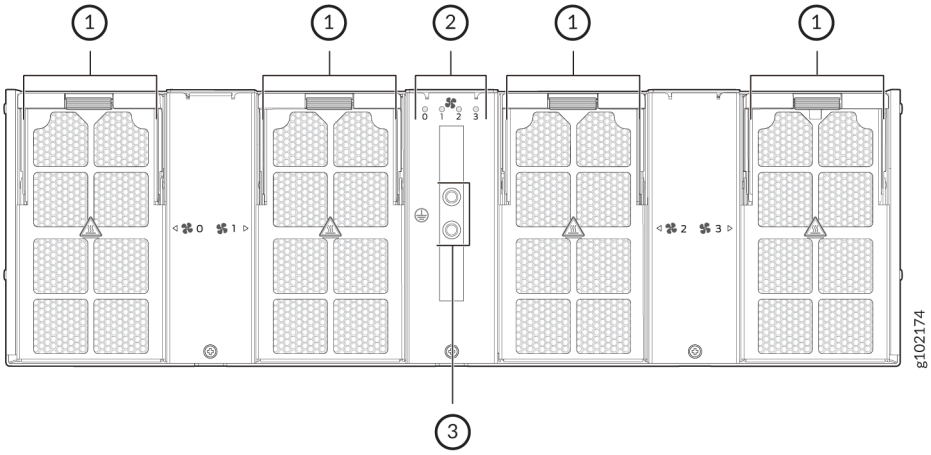

1– Fan tray	3– Two-hole protective grounding terminal
2– Fan tray LEDs	

Table 6 on page 18 describes the behavior of the fan LED.

Table 6: Fan Status LEDs

Color	State	Description
Green	Blinking	Fan hardware initialization is complete. Software initialization is pending.

Table 6: Fan Status LEDs *(Continued)*

Color	State	Description
	On steadily	Software initialization is complete, and the fan is functioning normally.
Yellow	On steadily	Equipment is faulty and malfunctioning.
Unlit	Off	Fan tray input power failed.

Airflow

The router has a front-to-back (airflow out or AFO) cooling system (see Figure 9 on page 20). The router pulls air through the front of the chassis toward the fan trays, which exhaust the air out of the router.

Figure 9: Airflow Through the Chassis

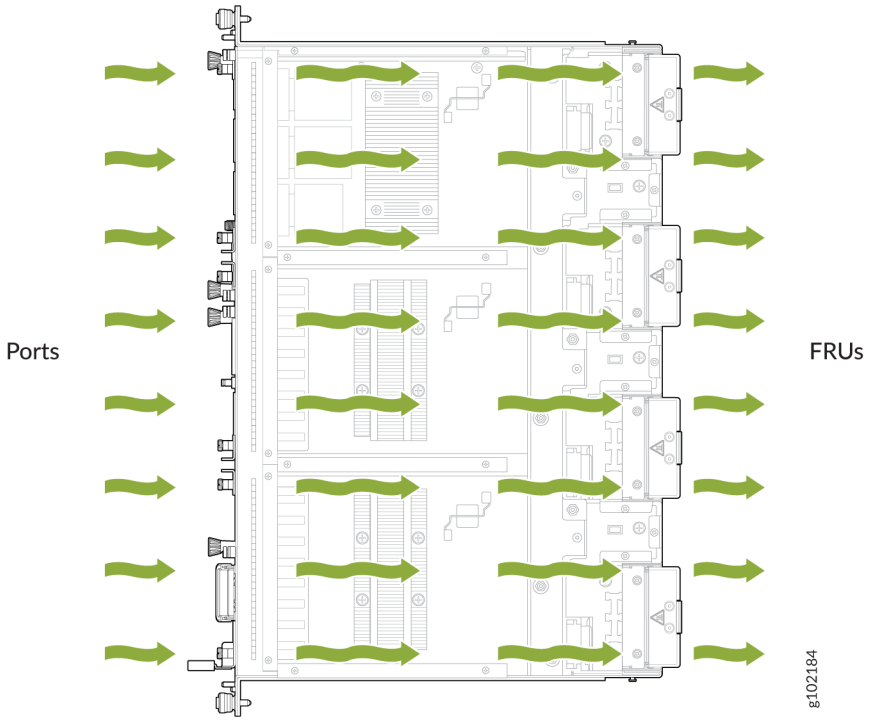

Air Filter Unit

The air filter unit consists of four parts—the outer filter cover, the air filter, the inner cage, and the side brushes. The air filter sits in between the outer filter and the inner cage. The air filter unit is installed in the front of the chassis and is secured to the rack rails by captive screws.

Figure 10: Air Filter Unit

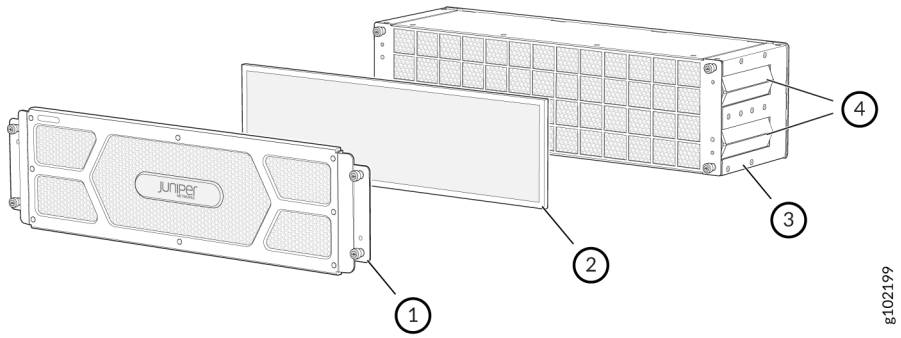

1– Outer filter cover	3– Inner cage
2– Air filter	4– Side brushes

NOTE: You must replace the air filter once every six months.

Power Supply Cooling System

The ACX7348 power supply modules (PSMs) are installed at the front of the chassis. The PSMs are self-cooling---each PSM has its own fan and is cooled by its own internal cooling system.

The PSMs in an ACX7348 router support back-to-front airflow (airflow in or AFI).

ACX7348 Power System

SUMMARY

The ACX7300 power system includes AC and DC power supply modules and related cords, cables, and cable lugs. The power supplies operate within specified ranges and are equipped with alarms and indicators.

IN THIS SECTION

- ACX7348 AC Power Supply Module Description | **22**
- ACX7348 DC Power Supply Module Description | **27**

The ACX7348 router is powered by 2200 W hot-removable and hot-insertable pre-installed AC or DC power supply modules (PSMs). You can install two PSMs on ACX7348 routers to provide full power redundancy to the device. Each PSM provides power to all the components in the router. If one PSM fails, or if you remove one PSM, the second PSM balances the electrical load without interruption. Each PSM has its own internal cooling system.

ACX7348 AC Power Supply Module Description

IN THIS SECTION

- ACX7348 AC Power Specifications | **23**
- AC Power Supply Module LEDs on ACX7348 Routers | **23**
- ACX7348 AC Power Cord Specifications | **25**

Each 2200 W AC power supply module (PSM) has a single AC input and provides 12 V power to the system. Figure 11 on page 22 shows the AC PSM.

Figure 11: ACX7348 AC PSM

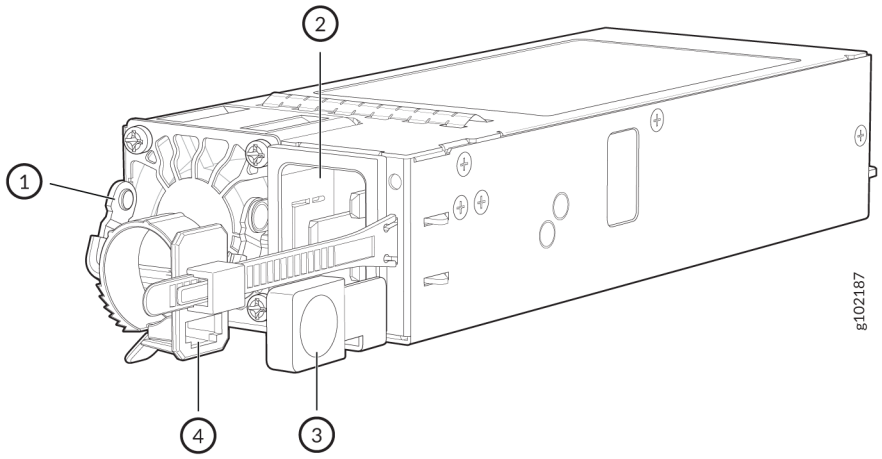

1– Handle	3– Ejector lever

2– AC inlet plug	4– Power cord retainer

ACX7348 AC Power Specifications

Table 7 on page 23 lists the power specifications for the AC PSM.

Table 7: AC Power Specifications for ACX7348 Routers (Base Chassis with Dual Routing Engines)

Item	Specifications for ACX7348
AC input voltage	Operating range: 180 VAC to 264 VAC
AC input line frequency	47 Hz - 63 Hz, Nominal: 50 Hz - 60 Hz
AC input current rating	13 A, Nominal Voltage: 200 VAC - 240 VAC
Typical power consumption	520 W (without optics) at 50% traffic load, with IMIX packet size of 1000 bytes.
Maximum power consumption	992 W at 100% traffic load, with IMIX packet size of 1000 bytes (48x1.5W SFP+ optics and 8x5W QSFP28 optics)

AC Power Supply Module LEDs on ACX7348 Routers

The AC power supply module (PSM) on an ACX7348 router uses a single LED to indicate power status. Figure 12 on page 24 shows the AC PSM components along with the status LED.

Figure 12: AC PSM Components

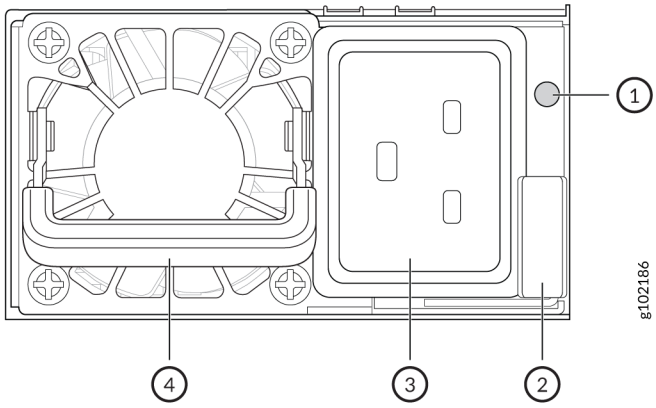

1– Status LED	3– AC inlet plug
2– Ejector lever	4– Handle

Table 8: AC PSM LEDs on ACX7348 Routers

LED Color	Power Supply State
Off	The PSM does not have AC power.
Solid green	The PSM is on and in the OK state.
Blinking green	The PSM is in standby state or other PSM in chassis is ON with 12VSB (vestigial sideband).
Solid amber	The PSM shut down due to a critical event such as high temperature, high power, high current, or fan failure.
	The power cord is unplugged or power is lost in one PSM.
Blinking amber	The PSM is operating, but there are warning events. Possible causes include high temperature, high power, high current, or a slow fan.

ACX7348 AC Power Cord Specifications

Detachable AC power cords are shipped with the AC power supply modules. The plug end of the power cord fits into the power source outlet that is standard for your geographical location.

Table 9: AC Power Cord Specifications

Country/Region	Electrical Specifications	Plug Standards	Juniper Model Number	Graphic
Argentina	250 VAC, 16 A, 90 °C	IRAM 2073	CBL-ACX-PWR-C19-AR	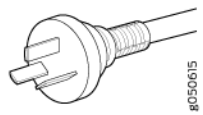
Australia and New Zealand	250 VAC, 15 A, 90 °C	SAA/3/15	CBL-ACX-PWR-C19-AU	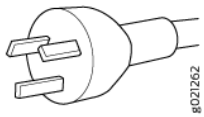
Brazil	250 VAC, 16 A, 90 °C	NBR 14136	CBL-ACX-PWR-C19-BR	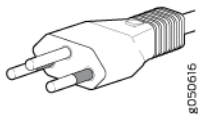
China	250 VAC, 16 A, 90 °C	PRC/3/16	CBL-ACX-PWR-C19-CH	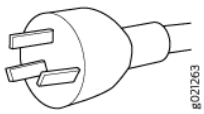
Europe (except Italy, Switzerland, and United Kingdom) and Korea	250 VAC, 16 A, 90 °C	CEE (7) 7	CBL-ACX-PWR-C19-EU CBL-ACX-PWR-C19-KR	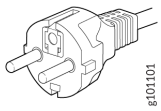

Table 9: AC Power Cord Specifications *(Continued)*

Country/Region	Electrical Specifications	Plug Standards	Juniper Model Number	Graphic
India	250 AC, 16 A, 85 °C	IS 1293	CBL-ACX-PWR-C19-IN	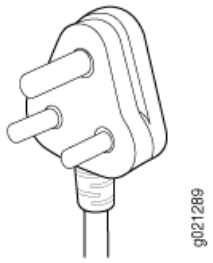
Israel	250 AC, 16 A, -40 °C to 70 °C	SI 32	CBL-ACX-PWR-C19-IL	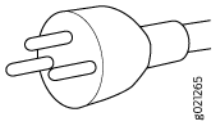
Italy	250 VAC, 16 A, 90 °C	CEI 23-50	CBL-ACX-PWR-C19-IT	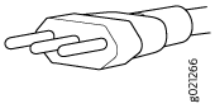
Japan	250 VAC, 15 A, -20 °C to 90 °C	NEMA L6-20	CBL-ACX-PWR-C19-JP	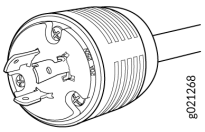
North America	250 VAC, 20 A 105 °C	NEMA 6-20	CBL-ACX-PWR-C19-US	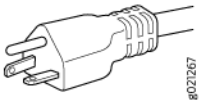
South Africa	250 VAC, 16 A, 90 °C	SANS 164-1	CBL-ACX-PWR-C19-SA	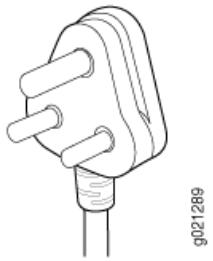

Table 9: AC Power Cord Specifications *(Continued)*

Country/Region	Electrical Specifications	Plug Standards	Juniper Model Number	Graphic
Switzerland	250 VAC, 16 A, 90 °C	SEV 1011, SEV 5934/2	CBL-ACX-PWR-C19-SZ	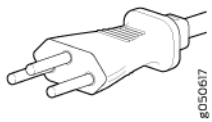
United Kingdom	250 VAC, 13 A, 90 °C	BS 1363(A) SS145	CBL-ACX-PWR-C19-UK	
Taiwan	250 VAC, 15 A, 90 °C	RA CNS 690	CBL-ACX-PWR-C19-TW	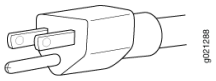

ACX7348 DC Power Supply Module Description

IN THIS SECTION

- ACX7348 Input DC Voltage Specification | **28**
- DC Power Supply Module LEDs on ACX7348 Routers | **28**
- ACX7348 DC Power Cables | **30**
- ACX7348 DC Power Cable Lugs | **30**

Each 2200 W DC power supply module (PSM) has a single DC input and provides 12 V power to the system. Figure 13 on page 28 shows the DC PSM.

Figure 13: ACX7348 DC PSM

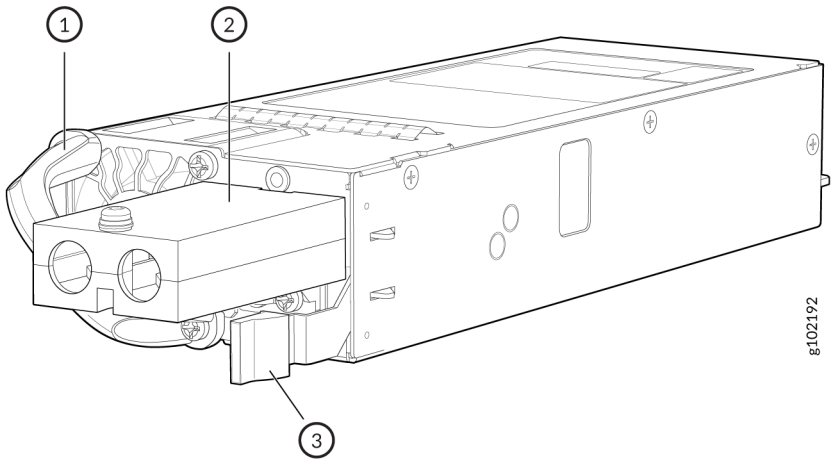

1– Handle	3– Ejector lever
2– DC input cable lug point	

ACX7348 Input DC Voltage Specification

Table 10 on page 28 lists the specifications for DC PSM.

Table 10: DC Power Specifications for ACX7348 Routers (Base Chassis with Dual RE)

Item	Specifications for ACX7348
DC input voltage	Operating voltage range: 40 V through 72 V
DC input current rating	50 A (maximum), Nominal Voltage: -48 VDC to -60 VDC
Typical power consumption	520 W (without optics) at 50% traffic load, with IMIX packet size of 1000 bytes.
Maximum power consumption	992 W at 100% traffic load, with IMIX packet size of 1000 bytes (48x1.5W SFP + optics and 8x5W QSFP28 optics)

DC Power Supply Module LEDs on ACX7348 Routers

The DC power supply module (PSM) on an ACX7348 router uses a single LED to indicate power status. Figure 14 on page 29 shows the DC PSM components along with the status LED.

Figure 14: DC PSM Components

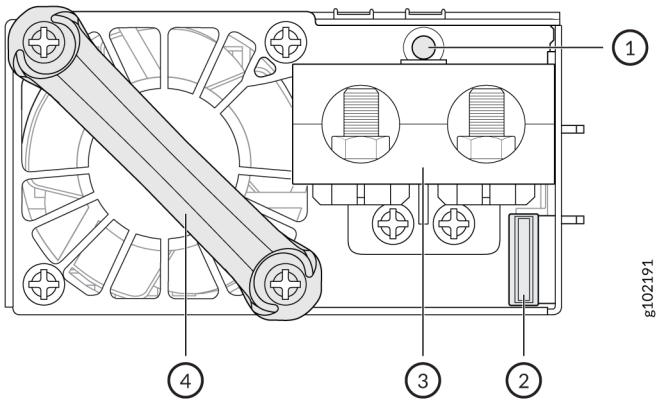

1– Status LED	3– DC inlet cable lug point
2– Ejector lever	4– Handle

Table 11: DC PSM LEDs on ACX7348 Routers

LED Color	Power Supply State
Off	The power supplies do not have DC power.
Solid green	The PSM is ON and in the OK state.
Blinking green	The PSM is in standby state or other PSM in chassis is ON with 12VSB (vestigial sideband).
Solid amber	The PSM shut down due to a critical event such as high temperature, high power, high current, or fan failure.
	The power cord is unplugged or power is lost in one PSM.
Blinking amber	The PSM is operating, but there are warning events. Possible causes include high temperature, high power, high current, or a slow fan.

ACX7348 DC Power Cables

You must supply DC power cables that meet the specifications required by the local code, laws, and standards. The ACX7348 supports a 6 AWG and 90 °C temperature-rated stranded copper wire.

CAUTION: You must ensure that power connections maintain the proper polarity.

WARNING: For field-wiring connections, use copper conductors only.

WARNING: Make sure that DC power cables do not block access to ACX7348 components or lie on the ground where people can trip on them.

ACX7348 DC Power Cable Lugs

The accessory box shipped with the ACX7348 router includes the cable lugs that attach to the terminal studs of each PSM. Figure 15 on page 31 shows the physical specifications of the DC power cable lugs.

Figure 15: ACX7348 DC Power Cable Lugs

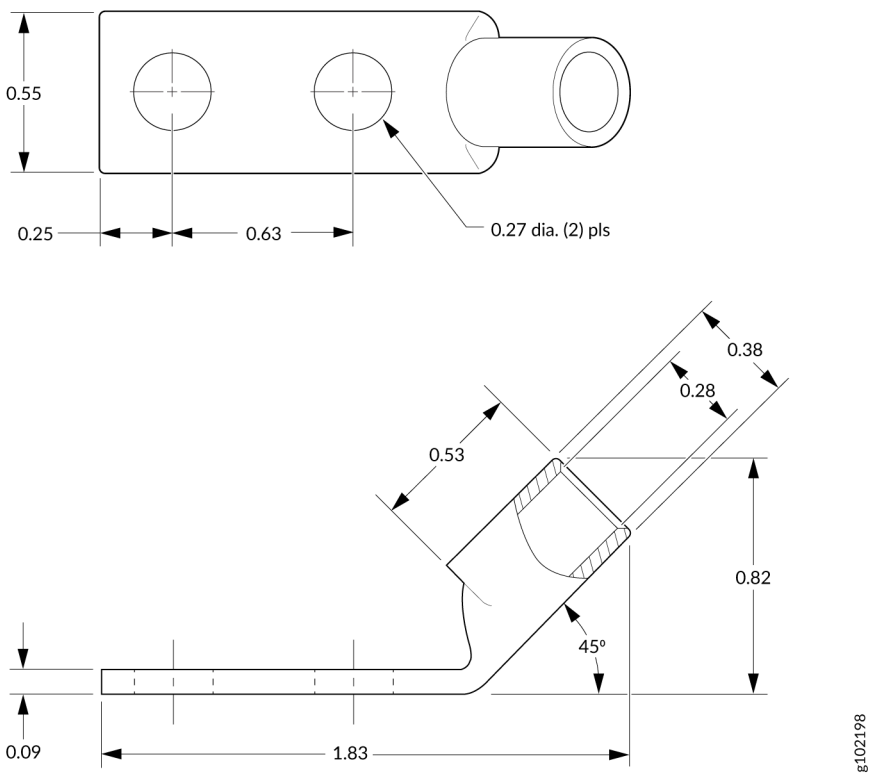

CAUTION: Before you begin to install the ACX7348 router, have a licensed electrician attach a cable lug to the power cables that you supply. A cable with an incorrectly attached lug can damage the ACX7348 router.

ACX7348 Routing Engine

SUMMARY

Learn about the ACX7300 Routing Engine and its specifications.

IN THIS SECTION

Routing Engine Front Panel | 33

The ACX7348 Routing Engine provides control plane and chassis management functions. The Routing Engine provides high-performance compute horsepower and memory and storage infrastructure that enables the operating system to run. You can install one or two Routing Engines on the router. A redundant system hosts two Routing Engines, one being the primary and the other, the backup. The ACX7348 Routing Engine is a hot-pluggable FRU and has front panel interfaces.

Figure 16: ACX7348 Routing Engine

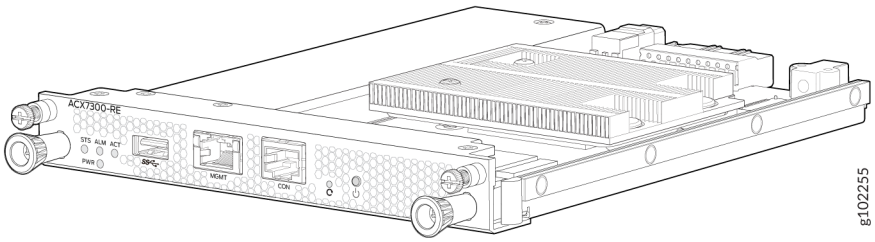

Each Routing Engine includes the following internal components:

- CPU—High-performance 2.2-GHz Intel 4 Core ICX-D CPU
- DRAM—2x32 GB DDR4 RAM
- Solid-state drive (SSD)—One 100 GB SATA SSD

Table 12 on page 32 summarizes the physical specifications of the Routing Engine.

Table 12: Physical Specifications of a Routing Engine

Description	Value
Height	0.88 in. (2.23 cm)
Width	6.75 in. (17.74 cm)
Depth	8.33 in. (21.25 cm)

Table 12: Physical Specifications of a Routing Engine *(Continued)*

Description	Value
Weight	2.14 lbs (0.97 kg)

Routing Engine Front Panel

Figure 17 on page 33 shows the front panel of the ACX7348 Routing Engine.

Figure 17: ACX7348 Routing Engine Front Panel

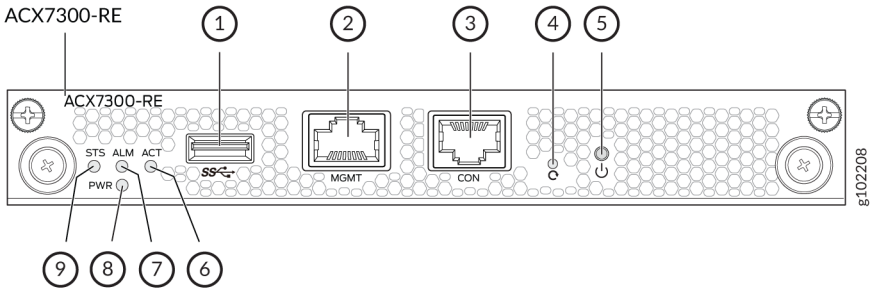

1– USB port	6– ACT LED
2– Management (MGMT) port	7– ALM LED
3– Console (CON) port	8– PWR LED
4– Reset button	9– STS LED
5– Online/Offline button	

The Routing Engine ports with the indicated labels function as follows:

- **CON**—Connects the Routing Engine to a system console through a serial cable with an RJ-45 connector.
- **MGMT**—Connects the Routing Engine through an Ethernet connection to a management LAN (or any other device that plugs into an Ethernet connection) for out-of-band management. The port uses an autosensing RJ-45 connector to support 10-Mbps, 100-Mbps, or 1000-Mbps connections. Two small LEDs (an activity LED and a link LED) on the port indicate that the connection is in use.

  The link LED is:

- Green (steady) when the 1000-Mbps link is up.
- Orange (steady) when the 100-Mbps link is up.
- Off when the link is down.
- Off and ACT LED is Yellow (blinking) when the 10-Mbps link is up.

The activity LED is:

- Yellow (blinking) when traffic is passing through the port.
- Off when link is down.
- Yellow (steady) when traffic is not passing through the port.

Both activity and link LEDs are off when the link is down.

- USB—Provides a removable media interface through which you can install Junos OS Evolved manually. Junos OS Evolved supports USB version 2.0 and later.

The following buttons are located on the Routing Engine:

- RESET button—When pressed, reboots the Routing Engine as follows:
  - Short press reboots the Routing Engine.
  - When pressed for more than 10 seconds, the Routing Engine reboots with an option for BIOS recovery.
- Online/Offline button—When the Routing Engine is offline and if the button is pressed (short press), the Routing Engine starts booting. When the Routing Engine is online and if the button is pressed for four seconds or more (long press), the Routing Engine shuts down.

Routing Engine LEDs

The LEDs labeled STS, ALM, ACT, PWR are located on the faceplate of the Routing Engine.

Table 13: ACX7300 Routing Engine LEDs

LED	Color	State	Description
PWR	Green	On steadily	The Routing Engine is receiving adequate power.
	Red	Blinking	The Routing Engine is powered on but it has encountered a fault condition.
	Dark	Off	Power is disabled.
STS	Green	On steadily	The software is loaded and the Routing Engine is online.
	Green	Blinking	The system is loading the software.
	Green	Blipping	The system is powering up.
	Yellow	Blinking	The software is initialized and the Routing Engine has encountered an error condition.
	Dark	Off	The system is offline.
ALM	Dark	Off	There is no alarm.
	Red	On steadily	A major alarm has occurred.

Table 13: ACX7300 Routing Engine LEDs *(Continued)*

LED	Color	State	Description
	Amber	On steadily	A minor alarm has occurred.
	Amber and Red	Blinking amber followed by blinking red	Indicates the presence of a major and a minor alarm.
ACT	Green	On steadily	This Routing Engine is active.
	Dark	Off	The Routing Engine in in standby mode.

ACX7300 Flexible PIC Concentrators

SUMMARY

Learn about the ACX7K3-FPC-2CD4C and ACX7K3-FPC-16Y Flexible PIC Concentrators (FPC), its features, specifications, and supported port speeds.

IN THIS SECTION

- ACX7K3-FPC-2CD4C | **37**
- ACX7K3-FPC-16Y | **40**
- FPC LEDs | **42**

The ACX7348 router supports the ACX7K3-FPC-2CD4C and ACX7K3-FPC-16Y Flexible PIC Concentrators (FPCs) that are installed horizontally in the front of the chassis. You can install the FPCs into any of the three FPC slots on the ACX7348 chassis.

FPCs are hot-pluggable field-replaceable units (FRUs)—you can remove and replace them without powering off the router or disrupting router functions.

Figure 18: ACX7K3-FPC-2CD4C

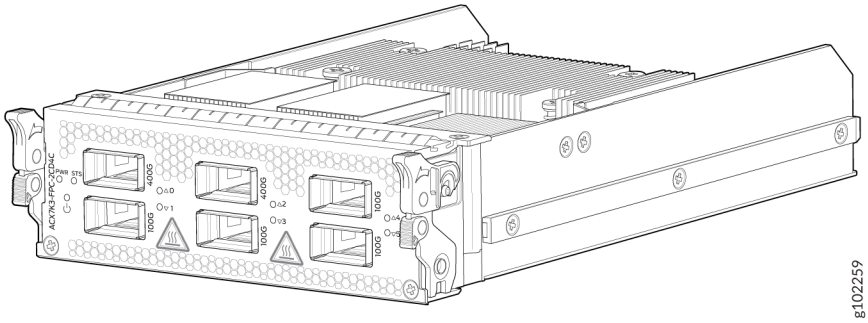

ACX7K3-FPC-2CD4C

Figure 19 on page 37 shows the front panel of the ACX7K3-FPC-2CD4C FPC.

Figure 19: ACX7K3-FPC-2CD4C Front Panel

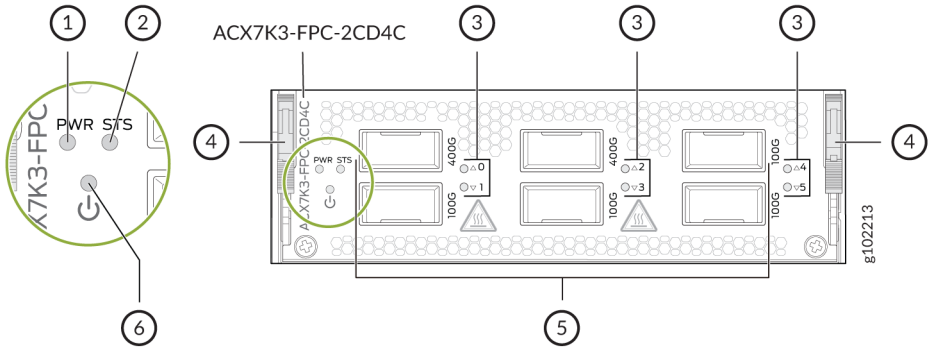

1– PWR LED	4– Ejecter lever
2– STS LED	5– 400GbE and 100GbE ports
3– Port LEDs	6– Online/Offline button

Table 14 on page 38 summarizes the specifications of the ACX7K3-FPC-2CD4C FPC.

Table 14: ACX7K3-FPC-2CD4C Specifications

Software release	Junos OS Evolved 23.4R1
Description	• Height x Width x Depth: 1.65 in. (4.19 cm) x 5.40 in. (13.71 cm) x 7.83 in. (19.88 cm) • Model number: ACX7K3-FPC-2CD4C • Name in the CLI: `ACX7300-2CD4C` • Number of ports: 6 (2x400 Gigabit Ethernet (GbE) and 4x100 GbE) **NOTE**: The ports can operate in Media Access Control Security (MACsec) and non-MACsec mode and at 40-Gbps, 100-Gbps, 200-Gbps, and 400-Gbps speeds.
ACX7348 chassis slots supported	Slot numbers FPC 1 - 3
Hardware features	• Ports can operate in Media Access Control Security (MACsec) and non-MACsec mode. • Supports 40-Gbps, 100-Gbps, 200-Gbps, and 400-Gbps speeds. For more information about supported port speeds, see Table 15 on page 39 . • 1588 PTP Class C Support
Online/Offline button	You can use this button to power off or switch on the FPC.
Cables and connectors	You can use the Hardware Compatibility Tool to find information about the pluggable transceivers supported on your Juniper Networks device.

Table 15 on page 39 summarizes the port speed capability of ACX7K3-FPC-2CD4C.

Table 15: ACX7K3-FPC-2CD4C Port Speed

FPC Slot	Port Number	Supported port speeds
FPC 1 and FPC 2	Port 0 and Port 2	Each port supports the following port speeds: • 1x400G • 4x100G • 2x100G • 1x100G • 4x25G • 1x40G • 4x10G **NOTE**: The 100GbE ports (1, 3, 4, and 5) are unused when 400GbE port speed is configured on ports 0 and 2.
	Port 1, Port 3, Port 4, Port 5	Each port supports the following port speeds: • 1x100G • 1x40G • 4x25G • 4x10G

Table 15: ACX7K3-FPC-2CD4C Port Speed *(Continued)*

FPC Slot	Port Number	Supported port speeds
FPC 3	Port 0, Port 1, Port 2	Each port supports the following port speeds: • 1x100G • 1x40G • 4x25G • 4x10G **NOTE**: Ports 3, 4, and 5 are unused in FPC slot 3.

ACX7K3-FPC-16Y

Figure 20 on page 40 shows the front panel of the ACX7K3-FPC-16Y.

Figure 20: ACX7K3-FPC-16Y Front Panel

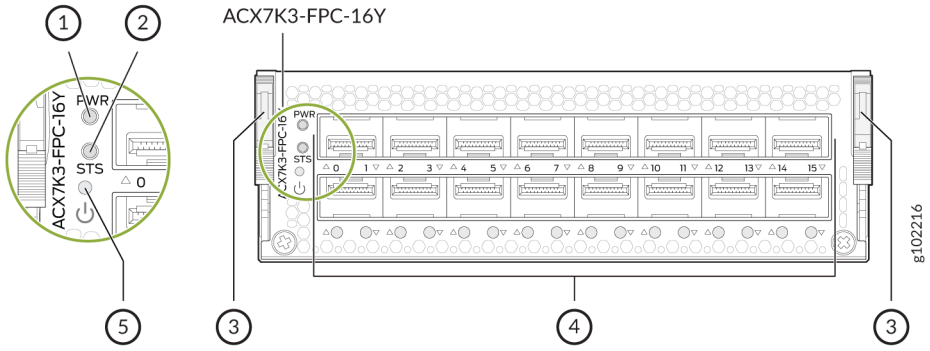

1– PWR LED	4– 16 x 50GbE ports
2– STS LED	5– Online/Offline button
3– Ejecter lever	

Table 16 on page 41 summarizes the specifications of the ACX7K3-FPC-16Y FPC.

Table 16: ACX7K3-FPC-16Y Specifications

Software release	Junos OS Evolved 23.4R1
Description	• Height x Width x Depth: 1.65 in. (4.19 cm) x 5.40 in. (13.71 cm) x 7.83 in. (19.88 cm) • Model number: ACX7K3-FPC-16Y • Name in the CLI: `ACX7300-16Y` • Number of ports: 16 x 50 Gigabit Ethernet (GbE)
ACX7348 chassis slots supported	Slot numbers FPC 1 - 3
Hardware features	• Ports can operate in Media Access Control Security (MACsec) and non-MACsec mode. • Supports 50-Gbps, 25-Gbps, 10-Gbps, and 1-Gbps speeds. For more information about supported port speeds, see Table 17 on page 42 . • 1588 PTP Class C Support
Online/Offline button	You can use this button to power off or switch on the FPC.
Cables and connectors	You can use the Hardware Compatibility Tool to find information about the pluggable transceivers supported on your Juniper Networks device.

Table 17 on page 42 summarizes the port speed capability of ACX7K3-FPC-16Y.

Table 17: ACX7K3-FPC-16Y Port Speed

FPC Slot	Port Number	Supported port speeds
FPC 1 and FPC 2	Port 0-15	Each port supports the following port speeds: • 1x10G • 1x25G or • 1x10G • 1x50G **NOTE**: • The ports are mapped to two port groups: 0-7 and 8-15. Port speeds 1x25G and 1x50G are not supported on the same port group. • 1G speed is not supported in FPC slots 1 and 2.
FPC 3	Port 0-13	Each port supports the following port speeds: • 1x1G • 1x10G • 1x25G **NOTE**: 50G speed is not supported in FPC slot 3.

FPC LEDs

Table 18 on page 43 describes the FPC status LEDs on the front panel of the ACX7K3-FPC-2CD4C and ACX7K3-FPC-16Y.

Table 18: FPC Status LEDs

LED	Color	State	Description
PWR	Green	On steadily	The FPC is receiving power and is operating correctly.
	Red	On steadily	The FPC has a power-related fault condition.
	Unlit	Off	The FPC is not receiving any power.
STS	Green	On steadily	The FPC is online.
		Blinking	The FPC is booting up.
	Red	Steady	The FPC has a fault condition or alarm.
	Unlit	Off	The FPC is disabled or offline.

Table 19 on page 43 describes the network port LEDs.

Table 19: Network LEDs

Color	State	Description
Unlit	Off	A transceiver is not present in the port, or the link is down because of signal loss.
Green	On steadily	A link is established.
Amber	On steadily	The link is down because of a remote error or because the port was disabled through the CLI.
Red	On steadily	The port has a hardware failure or the link is down.

CHAPTER 3

Site Planning, Preparation, and Specifications

ACX7348 Site Guidelines and Requirements | 45

ACX7348 Rack and Cabinet Requirements | 50

ACX7348 Network Cable and Transceiver Planning | 53

ACX7348 Management and Console Port Specifications and Pinouts | 70

ACX7348 Site Guidelines and Requirements

SUMMARY

The proper function of the ACX7348 router depends on you meeting certain environmental requirements, following site and wiring guidelines, and ensuring that your installation meets the grounding specifications and airflow clearance requirements that support ACX7348 routers.

IN THIS SECTION

- Environmental Requirements and Specifications for ACX7348 Routers | **45**
- General Site Guidelines | **46**
- Site Electrical Wiring Guidelines | **46**
- ACX7348 Grounding Cable and Lug Specifications | **48**
- Clearance Requirements for Airflow and Hardware Maintenance of ACX7348 Routers | **49**

Environmental Requirements and Specifications for ACX7348 Routers

You must install the router in a rack or cabinet in a dry, clean, well-ventilated, and temperature-controlled environment.

Follow these environmental guidelines:

- The site must be as dust-free as possible because dust can clog air intake vents and filters, reducing the efficiency of the router cooling system.
- Maintain ambient airflow for normal router operation. If the airflow is blocked or restricted, or if the intake air is too warm, the router might overheat, and the router temperature monitor might shut down the device to protect the hardware components.

Table 20 on page 46 lists the environmental conditions required for normal router operation.

Table 20: ACX7348 Router Environmental Tolerances

Description	Tolerance
Altitude	6000 ft (1828 m)
Relative operating humidity	5% to 90% (noncondensing)
Operating temperature	–40°F (–40°C) through 149°F (65°C), 1°C derating for every 1000 ft **NOTE**: With average IMIX packet size greater than 1000 bytes
Shipping and storage temperature	-40° C to 70° C (-40° F to 158° F)

General Site Guidelines

Efficient device operation requires proper site planning and maintenance. It also requires proper layout of the equipment, rack or cabinet, and wiring closet.

To plan and create an acceptable operating environment for your device and prevent environmentally caused equipment failures:

- Keep the area around the chassis free from dust and conductive material, such as metal flakes.
- Follow prescribed airflow guidelines to ensure that the cooling system functions properly. Ensure that exhaust from other equipment does not blow into the intake vents of the device.
- Follow the prescribed electrostatic discharge (ESD) prevention procedures to prevent damaging the equipment. Static discharge can cause components to fail completely or intermittently over time.
- Install the device in a secure area, so that only authorized personnel can access the device.

Site Electrical Wiring Guidelines

Table 21 on page 47 describes the factors you must consider while planning the electrical wiring at your site.

WARNING: You must provide a properly grounded and shielded environment and use electrical surge-suppression devices.

Avertissement Vous devez établir un environnement protégé et convenablement mis à la terre et utiliser des dispositifs de parasurtension.

Table 21: Site Electrical Wiring Guidelines

Site Wiring Factor	Guidelines
Signaling limitations	If your site experiences any of the following problems, consult experts in electrical surge suppression and shielding: • Improperly installed wires cause radio frequency interference (RFI). • Damage from lightning strikes occurs when wires exceed recommended distances or pass between buildings. • Electromagnetic pulses (EMPs) caused by lightning damage unshielded conductors and electronic devices.
Radio frequency interference	To reduce or eliminate RFI from your site wiring, do the following: • Use a twisted-pair cable with a good distribution of grounding conductors. • If you must exceed the recommended distances, use a high-quality twisted-pair cable with one ground conductor for each data signal, when applicable.
Electromagnetic compatibility	If your site is susceptible to problems with electromagnetic compatibility (EMC), particularly from lightning or radio transmitters, seek expert advice. Strong sources of electromagnetic interference (EMI) can cause: • Destruction of the signal drivers and receivers in the device, • Electrical hazards as a result of power surges conducted over the lines into the equipment.

ACX7348 Grounding Cable and Lug Specifications

For installations that require a separate grounding conductor to the chassis, you must ground the router before you connect power. Grounding the router ensures proper operation and meets safety and electromagnetic interference (EMI) requirements. To ground an ACX7348 router, connect a grounding cable to earth ground, and then attach the grounding cable to the chassis grounding point.

WARNING: To comply with GR-1089 requirements, all intra-building copper cabling used for transceiver ports must be shielded and grounded at both ends.

CAUTION: Before router installation begins, have a licensed electrician attach a cable lug to the grounding cables that you supply. A cable with an incorrectly attached lug can damage the router.

NOTE: You must ensure that all cables are rated for the environment in which they are deployed.

For an ACX7348 router, you need a grounding cable and an LCD6-14A-L lug (see Figure 21 on page 48 . The grounding lug accommodates a 6 AWG , 90° C stranded copper wire (green with yellow insulation), or as required by the local code.

Figure 21: Grounding Cable Lug Specifications

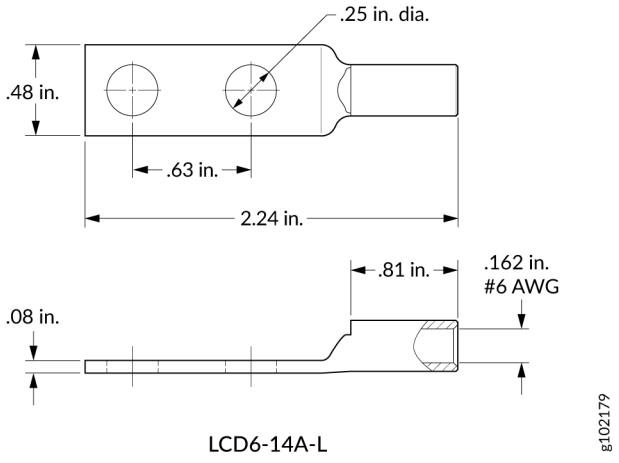

Clearance Requirements for Airflow and Hardware Maintenance of ACX7348 Routers

When planning the site for installing an ACX7348 router, you must allow sufficient clearance around the installed chassis. See Figure 22 on page 49 .

Figure 22: Clearance Requirements for Hardware Maintenance of ACX7348 Routers

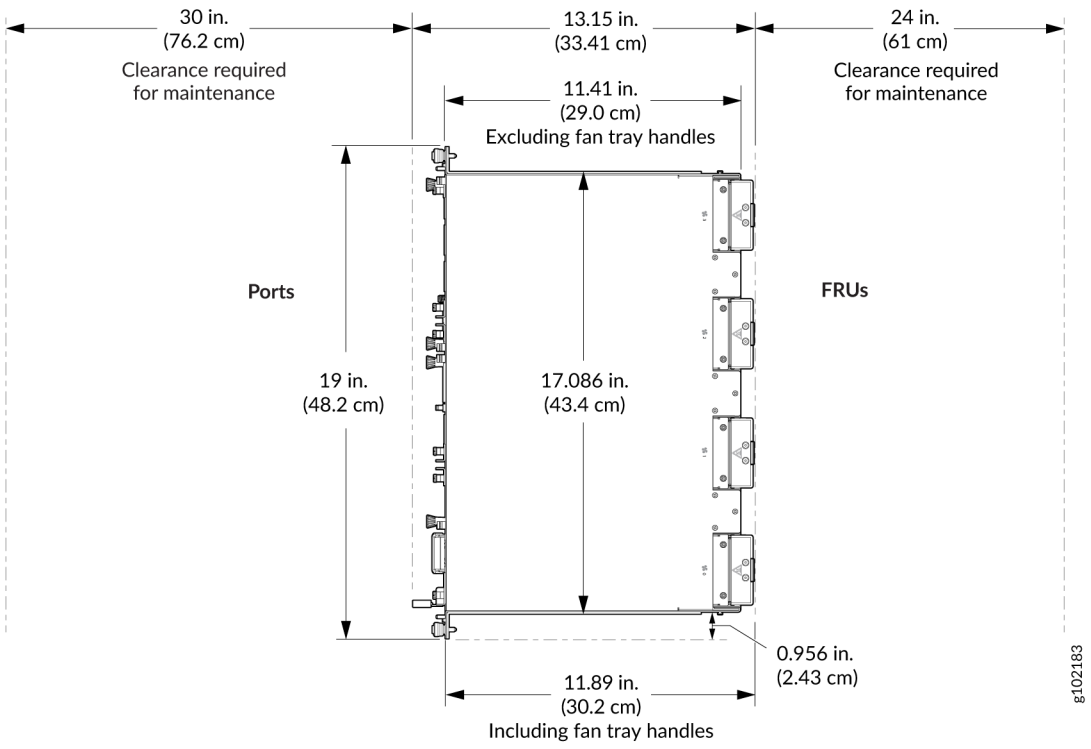

Ensure that your installation of the ACX7348 router chassis meets the following requirements:

- For the cooling system to function properly, the airflow around the chassis must be unrestricted. See "Airflow" on page 19 for more information about the airflow through the chassis.
- If you are mounting an ACX7348 router in a rack or cabinet with other equipment, ensure that the exhaust from other equipment does not blow into the intake vents of the chassis.
- For service personnel to remove and install hardware components, and to accommodate the interface and power cable bend radius, allow at least 24 in. (61 cm) of space both at the front and the rear of the router.

ACX7348 Rack and Cabinet Requirements

SUMMARY

You must install the ACX7348 router on a rack or in a cabinet that meets specific dimension, strength, and airflow requirements.

IN THIS SECTION

- Rack Requirements for ACX7348 Routers | **50**
- Cabinet Requirements for ACX7348 Routers | **51**

Rack Requirements for ACX7348 Routers

You can mount the ACX7348 routers on two-post racks or four-post racks.

The size, strength, and location of the rack must accommodate the router's weight and external dimensions.

Table 22 on page 50 provides the rack requirements and guidelines for ACX7348 routers.

Table 22: Rack Requirements for ACX7348 Routers

Rack Requirement	Guidelines
Rack type	Use a two-post or four-post rack that provides bracket holes or hole patterns spaced at 1 U increments (1.75 in. or 4.45 cm), and ensure that the rack meets the size and strength requirements to support the weight of the router. A U is the standard rack unit defined in *Cabinets, Racks, Panels, and Associated Equipment* (document number EIA-310–D) published by the Electronics Industry Association.
Mounting bracket hole spacing	Ensure that the holes in the mounting brackets are spaced at 1 U (1.75 in. or 4.45 cm) so that the router can be mounted in any rack that provides holes spaced at that distance.

Table 22: Rack Requirements for ACX7348 Routers *(Continued)*

Rack Requirement	Guidelines
Rack size and strength	• Ensure that the rack complies with the standards for a 19-in. rack as defined in *Cabinets, Racks, Panels, and Associated Equipment* (document number EIA-310–D), published by the Electronics Industry Association. • Use an 800-mm rack as defined in the four-part *Equipment Engineering (EE) European telecommunications standard for equipment practice* (document numbers ETS 300 119-1 through 119-4), published by the European Telecommunications Standards Institute (http://www.etsi.org). • Ensure that the rack rails are spaced widely enough to accommodate the external dimensions of the router chassis. The outer edges of the front-mounting brackets extend the width to 19 in. (48.26 cm). • Ensure that the spacing of rails and adjacent racks allows for proper clearance around the router and rack.
Rack connection to building structure	• Secure the rack to the building structure. • If earthquakes are a possibility in your geographical area, secure the rack to the floor. • Secure the rack to the ceiling brackets and to the wall or floor brackets for maximum stability.

Cabinet Requirements for ACX7348 Routers

You can mount an ACX7348 router in an enclosure or cabinet that contains a two-post or four-post 19-in. open rack as defined in *Cabinets, Racks, Panels, and Associated Equipment* (document number EIA-310-D), published by the Electronics Industry Association.

Table 23 on page 52 provides the cabinet requirements and guidelines for an ACX7348 router.

Table 23: Cabinet Requirements and Specifications

Cabinet Requirement	Guidelines
Cabinet clearance	The minimum total clearance inside the cabinet between the fan tray (excluding the fan tray handle) and inside of the rear door is 2.36 in. (6 cm).
Cabinet airflow requirements	When you mount the device in a cabinet, ensure that ventilation through the cabinet is sufficient to prevent overheating. • Ensure adequate cool air supply to dissipate the thermal output of the device or devices. • Ensure that the hot air exhaust of the chassis exits the cabinet without recirculating into the device. An open cabinet (without a top or doors) that employs hot air exhaust extraction from the top ensures the best airflow through the chassis. If the cabinet contains a top or doors, perforations in these elements help remove the hot air exhaust. • Install the device in the cabinet in a way that maximizes the open space on the side of the chassis that has the hot air exhaust. • Route and dress all cables to minimize the blockage of airflow to and from the chassis. • Ensure that the spacing of rails and adjacent cabinets is such that there is proper clearance around the device and cabinet. • A cabinet larger than the minimum required provides better airflow and reduces the chance of overheating.
Securing cabinet to building structure	• If your geographical area is earthquake-prone, secure the cabinet to the floor. • Secure the cabinet to the ceiling brackets as well as wall or floor brackets for maximum stability.

ACX7348 Network Cable and Transceiver Planning

SUMMARY

IN THIS SECTION

- Determining Transceiver Support for ACX7348 | 53
- Cable and Connector Specifications for ACX7348 | 59
- Calculating Power Budget and Power Margin for Fiber-Optic Cables | 67

Determining Transceiver Support for ACX7348

You can use the Hardware Compatibility Tool to find information about the pluggable transceivers and connector types supported by your Juniper Networks device. The tool also documents the optical and cable characteristics, where applicable, for each transceiver. You can search for transceivers by product—and the tool displays all the transceivers supported on that device—or by category, interface speed, or type. You can find the list of supported transceivers for the ACX7348 at https://apps.juniper.net/hct/product/.

CAUTION: If you face a problem running a Juniper Networks device that uses a third party optic or cable, the Juniper Networks Technical Assistance Center (JTAC) can help you diagnose the source of the problem. Your JTAC engineer might recommend that you check the third party optic or cable and potentially replace it with an equivalent Juniper Networks optic or cable that is qualified for the device.

Table 24: Power Requirement and Supported Operating Temperature for Commercial Grade Transceivers

FPC	Transceiver Type	Power Requirement	Supported Operating Temperature
ACX7K3-FPC-2CD4C (2 QSFP56-DD ports + 4 QSFP28 ports)	QSFP56-DD 400G (ZR+)	23W (2xQSFP56-DD 400G-ZR+)	40 ℃ at 6000 ft (standalone install)
	QSFP56-DD 400G (ZR)	20W (2xQSFP56-DD 400G-ZR)	40 ℃ at 6000 ft (standalone install)
	QSFP56-DD 400G	14W (2xQSFP56-DD 400G)	40 ℃ at 6000 ft (standalone install)
	QSFP28-DD 200G and QSFP28 100G	12.5W 2xQSFP28-DD 200G (7W) + 4xQSFP28 100G (5.5W)	40 ℃ at 6000 ft (standalone install) 55 ℃ at 6000 ft (standalone install) 55 ℃ at 6000 ft (street cabinet)
ACX7K3-FPC-16Y (16 SFP56 ports)	SFP56 50G	3W	40 ℃ at 6000 ft (standalone install)
		2W	40 ℃ at 6000 ft (standalone install) 55 ℃ at 6000 ft (standalone install) 55 ℃ at 6000 ft (street cabinet)

Table 24: Power Requirement and Supported Operating Temperature for Commercial Grade Transceivers *(Continued)*

FPC	Transceiver Type	Power Requirement	Supported Operating Temperature
	SFP28 25G	1.5W	40 ℃ at 6000 ft (standalone install) 55 ℃ at 6000 ft (standalone install) 55 ℃ at 6000 ft (street cabinet)
Fixed FPC (48 SFP28 ports + 8 QSFP28 ports)	QSFP28 100G	5.5W	40 ℃ at 6000 ft (standalone install) 55 ℃ at 6000 ft (standalone install) 55 ℃ at 6000 ft (street cabinet)
	SFP28 25G	1.5W	40 ℃ at 6000 ft (standalone install) 55 ℃ at 6000 ft (standalone install) 55 ℃ at 6000 ft (street cabinet)

Table 25: Power Requirement and Supported Operating Temperature for Industrial Grade Transceivers

FPC	Transceiver Type	Power Requirement	Supported Operating Temperature
ACX7K3-FPC-2CD4C (2 QSFP56-DD ports + 4 QSFP28 ports)	QSFP56-DD 400G (XR)	23W (2xQSFP56-DD 400G-XR)	40 ℃ at 6000 ft (standalone install)

Table 25: Power Requirement and Supported Operating Temperature for Industrial Grade Transceivers *(Continued)*

FPC	Transceiver Type	Power Requirement	Supported Operating Temperature
	QSFP56-DD 400G (ZR+)	23W (2xQSFP56-DD 400G-ZR+)	40 ℃ at 6000 ft (standalone install) 55 ℃ at 6000 ft (standalone install)
	QSFP56-DD 400G (ZR)	20W (2xQSFP56-DD 400G-ZR)	40 ℃ at 6000 ft (standalone install) 55 ℃ at 6000 ft (standalone install)
	QSFP56-DD 400G	14W (2xQSFP56-DD 400G)	40 ℃ at 6000 ft (standalone install) 55 ℃ at 6000 ft (standalone install) 55 ℃ at 6000 ft (street cabinet) 65 ℃ at 6000 ft (standalone install) 65 ℃ at 6000 ft (street cabinet)

Table 25: Power Requirement and Supported Operating Temperature for Industrial Grade Transceivers *(Continued)*

FPC	Transceiver Type	Power Requirement	Supported Operating Temperature
	QSFP28-DD 200G and QSFP28 100G	12.5W (2xQSFP28-DD 200G (7W) + 4xQSFP28 100G (5.5W))	40 ℃ at 6000 ft (standalone install) 55 ℃ at 6000 ft (standalone install) 55 ℃ at 6000 ft (street cabinet) 65 ℃ at 6000 ft (standalone install) 65 ℃ at 6000 ft (street cabinet)
ACX7K3-FPC-16Y (16 SFP56 ports)	SFP56 50G	3W	40 ℃ at 6000 ft (standalone install) 55 ℃ at 6000 ft (standalone install) 55 ℃ at 6000 ft (street cabinet) 65 ℃ at 6000 ft (standalone install) 65 ℃ at 6000 ft (street cabinet)

Table 25: Power Requirement and Supported Operating Temperature for Industrial Grade Transceivers *(Continued)*

FPC	Transceiver Type	Power Requirement	Supported Operating Temperature
		2W	40 ℃ at 6000 ft (standalone install) 55 ℃ at 6000 ft (standalone install) 55 ℃ at 6000 ft (street cabinet) 65 ℃ at 6000 ft (standalone install) 65 ℃ at 6000 ft (street cabinet)
	SFP28 25G	1.5W	40 ℃ at 6000 ft (standalone install) 55 ℃ at 6000 ft (standalone install) 55 ℃ at 6000 ft (street cabinet) 65 ℃ at 6000 ft (standalone install) 65 ℃ at 6000 ft (street cabinet)

Table 25: Power Requirement and Supported Operating Temperature for Industrial Grade Transceivers *(Continued)*

FPC	Transceiver Type	Power Requirement	Supported Operating Temperature
Fixed FPC (48 SFP28 ports + 8 QSFP28 ports)	QSFP28 100G	5.5W	40 ℃ at 6000 ft (standalone install) 55 ℃ at 6000 ft (standalone install) 55 ℃ at 6000 ft (street cabinet) 65 ℃ at 6000 ft (standalone install) 65 ℃ at 6000 ft (street cabinet)
	SFP28 25G	1.5W	40 ℃ at 6000 ft (standalone install) 55 ℃ at 6000 ft (standalone install) 55 ℃ at 6000 ft (street cabinet) 65 ℃ at 6000 ft (standalone install) 65 ℃ at 6000 ft (street cabinet)

Cable and Connector Specifications for ACX7348

IN THIS SECTION

12-Fiber MPO Connectors | **60**

- 24-Fiber MPO Connectors | 65
- CS Connector | 66
- LC Duplex Connectors | 66

The transceivers that an ACX7348 device supports use fiber-optic cables and connectors. The type of connector and the type of fiber depend on the transceiver type.

You can determine the supported cables and connectors for your specific transceiver by using the Hardware Compatibility Tool.

CAUTION: To maintain agency approvals, you must use only a properly constructed, shielded cable.

NOTE: The terms multifiber push-on (MPO) and multifiber termination push-on (MTP) describe the same connector type. The rest of this topic uses MPO to mean MPO or MTP.

12-Fiber MPO Connectors

The 12-fiber MPO connectors on Juniper Networks devices use two types of cables—patch cables with MPO connectors on both ends, and breakout cables with an MPO connector on one end and four LC duplex connectors on the other end. Depending on the application, the cables might use single-mode fiber (SMF) or multimode fiber (MMF). Juniper Networks sells cables that meet the supported transceiver requirements, but you are not required to purchase cables from Juniper Networks.

Ensure that you order cables with the correct polarity. Vendors refer to these crossover cables as *key up to key up*, *latch up to latch up*, *Type B*, or *Method B*. If you are using patch panels between two transceivers, ensure that the proper polarity is maintained through the cable plant.

Also, ensure that the fiber end in the connector is finished correctly. Physical contact (PC) refers to fiber that has been polished flat. Angled physical contact (APC) refers to fiber that has been polished at an angle. Ultra physical contact (UPC) refers to fiber that has been polished flat to a finer finish. You can determine the required fiber end with the connector type in the Hardware Compatibility Tool.

12-Fiber Ribbon Patch Cables with MPO Connectors

You can use 12-fiber ribbon patch cables with socket MPO connectors to connect two transceivers of the same type—for example, 40GBASE-SR4-to-40GBASESR4 or 100GBASE-SR4-to-100GBASE-SR4.

You can also connect 4x10GBASE-LR or 4x10GBASE-SR transceivers by using patch cables—for example, 4x10GBASE-LR-to-4x10GBASE-LR or 4x10GBASE-SR-to-4x10GBASE-SR—instead of breaking the signal out into four separate signals.

Table 26 on page 61 describes the signals on each fiber. Table 27 on page 62 shows the pin-to-pin connections for proper polarity.

Table 26: Cable Signals for 12-Fiber Ribbon Patch Cables

Fiber	Signal
1	Tx0 (Transmit)
2	Tx1 (Transmit)
3	Tx2 (Transmit)
4	Tx3 (Transmit)
5	Unused
6	Unused
7	Unused
8	Unused
9	Rx3 (Receive)
10	Rx2 (Receive)
11	Rx1 (Receive)
12	Rx0 (Receive)

Table 27: Cable Pinouts for 12-Fiber Ribbon Patch Cables

MPO Pin	MPO Pin
1	12
2	11
3	10
4	9
5	8
6	7
7	6
8	5
9	4
10	3
11	2
12	1

12-Fiber Ribbon Breakout Cables with MPO-to-LC Duplex Connectors

You can use 12-fiber ribbon breakout cables with MPO-to-LC duplex connectors to connect a QSFP+ transceiver to four separate SFP+ transceivers—for example, 4x10GBASE-LR-to-10GBASE-LR or 4x10GBASE-SR-to-10GBASE-SR SFP+ transceivers. The breakout cable is constructed out of a 12-fiber ribbon fiber-optic cable. The ribbon cable splits from a single cable with a socket MPO connector on one end into four cable pairs with four LC duplex connectors on the other end.

Figure 23 on page 63 shows an example of a typical 12-fiber ribbon breakout cable with MPO-to-LC duplex connectors (depending on the manufacturer, your cable might look different).

Figure 23: 12-Fiber Ribbon Breakout Cable

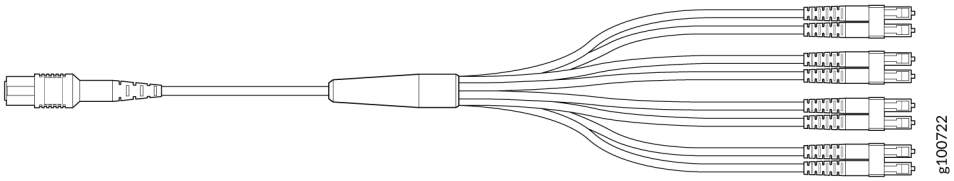

Table 28 on page 63 describes the way the fibers are connected between the MPO and LC duplex connectors. The cable signals are the same as those described in Table 26 on page 61 .

Table 28: Cable Pinouts for 12-Fiber Ribbon Breakout Cables

MPO Connector Pin	LC Duplex Connector Pin
1	Tx on LC Duplex 1
2	Tx on LC Duplex 2
3	Tx on LC Duplex 3
4	Tx on LC Duplex 4
5	Unused
6	Unused
7	Unused
8	Unused
9	Rx on LC Duplex 4

Table 28: Cable Pinouts for 12-Fiber Ribbon Breakout Cables *(Continued)*

MPO Connector Pin	LC Duplex Connector Pin
10	Rx on LC Duplex 3
11	Rx on LC Duplex 2
12	Rx on LC Duplex 1

12-Ribbon Patch and Breakout Cables Available from Juniper Networks

Juniper Networks sells 12-ribbon patch and breakout cables with MPO connectors that meet the requirements described earlier. You are not required to purchase cables from Juniper Networks. Table 29 on page 64 describes the available cables.

Table 29: 12-Ribbon Patch and Breakout Cables Available from Juniper Networks

Cable Type	Connector Type	Fiber Type	Cable Length	Juniper Model Number
12-ribbon patch	Socket MPO/PC to socket MPO/PC, key up to key up	MMF (OM3)	1 m	MTP12-FF-M1M
			3 m	MTP12-FF-M3M
			5 m	MTP12-FF-M5M
			10 m	MTP12-FF-M10M
	Socket MPO/APC to socket MPO/APC, key up to key up	SMF	1 m	MTP12-FF-S1M
			3 m	MTP12-FF-S3M
			5 m	MTP12-FF-S5M

Table 29: 12-Ribbon Patch and Breakout Cables Available from Juniper Networks *(Continued)*

Cable Type	Connector Type	Fiber Type	Cable Length	Juniper Model Number
			10 m	MTP12-FF-S10M
12-ribbon breakout	Socket MPO/PC, key up, to four LC/UPC duplex	MMF (OM3)	1 m	MTP-4LC-M1M
			3 m	MTP-4LC-M3M
			5 m	MTP-4LC-M5M
			10 m	MTP-4LC-M10M
	Socket MPO/APC, key up, to four LC/UPC duplex	SMF	1 m	MTP-4LC-S1M
			3 m	MTP-4LC-S3M
			5 m	MTP-4LC-S5M
			10 m	MTP-4LC-S10M

24-Fiber MPO Connectors

You can use patch cables with 24-fiber MPO connectors to connect two supported transceivers of the same type—for example, 2x100GE-SR-to-2x100GE-SR.

Figure 24 on page 66 shows the 24-fiber MPO optical lane assignments.

Figure 24: 24-Fiber MPO Optical Lane Assignments

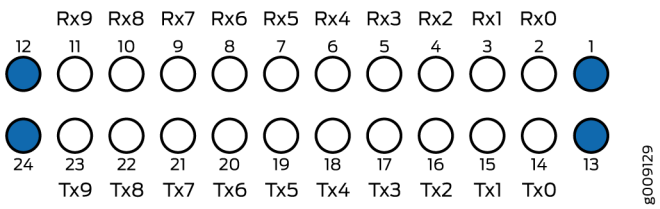

NOTE: You must order cables with the correct polarity. Vendors refer to these crossover cables as *key up to key up*, *latch up to latch up*, *Type B*, or *Method B*. If you are using patch panels between two transceivers, ensure that the proper polarity is maintained through the cable plant.

The MPO optical connector for the CFP2-100G-SR10-D3 is defined in *Section 5.6* of the *CFP2 Hardware Specification* and *Section 88.10.3* of *IEEE STD 802.3-2012*. These specifications include the following requirements:

- Recommended Option A in IEEE STD 802.3-2012.
- The transceiver receptacle is a plug. A patch cable with a socket connector is required to connect to the module.
- Ferrule finish must be a flat-polished interface that is compliant with IEC 61754-7.
- Alignment key is key up.

The optical interface must meet the FT-1435-CORE requirement in *Generic Requirements for Multi-Fiber Optical Connectors*. The module must pass the wiggle test defined by IEC 62150-3.

CS Connector

You can use patch cables with CS connectors to connect two supported transceivers of the same type-for example, 2x100G-LR4 to 2x100G-LR4 or 2x100G-CWDM4 to 2x100G-CWDM4. CS connectors are compact connectors that are designed for next-generation QSFP-DD transceivers. The CS connector provides easy backward compatibility with QSFP28 and QSFP56 transceivers.

LC Duplex Connectors

You can use patch cables with LC duplex connectors to connect two supported transceivers of the same type—for example, 40GBASE-LR4-to-40GBASE-LR4 or 100GBASE-LR4-to 100GBASE-LR4. A patch cable is one fiber pair with two LC duplex connectors at opposite ends. LC duplex connectors are also used with 12-fiber ribbon breakout cables.

Figure 25 on page 67 shows how to install an LC duplex connector in a transceiver.

Figure 25: LC Duplex Connector

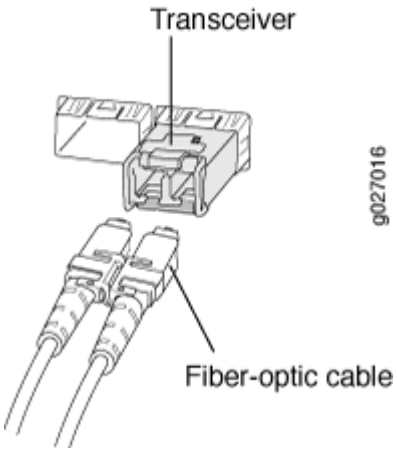

Calculating Power Budget and Power Margin for Fiber-Optic Cables

IN THIS SECTION

- How to Calculate Power Budget for Fiber-Optic Cables | 67
- How to Calculate Power Margin for Fiber-Optic Cables | 68

Use the information in this topic and the specifications for your optical interface to calculate the power budget and power margin for fiber-optic cables.

TIP: You can use the Hardware Compatibility Tool to find information about the pluggable transceivers supported on your Juniper Networks device.

To calculate the power budget and power margin, perform the following tasks:

How to Calculate Power Budget for Fiber-Optic Cables

To ensure that fiber-optic connections have sufficient power for correct operation, you need to calculate the link's power budget, which is the maximum amount of power it can transmit. When you calculate

the power budget, you use a worst-case analysis to provide a margin of error, even though all the parts of an actual system do not operate at the worst-case levels. To calculate the worst-case estimate of power budget (P_B), you assume minimum transmitter power (P_T) and minimum receiver sensitivity (P_R):

$P_B = P_T - P_R$

The following hypothetical power budget equation uses values measured in decibels (dB) and decibels referred to one milliwatt (dBm):

$P_B = P_T - P_R$

$P_B = -15 \text{ dBm} - (-28 \text{ dBm})$

$P_B = 13 \text{ dB}$

How to Calculate Power Margin for Fiber-Optic Cables

After calculating a link's power budget, you can calculate the power margin (P_M), which represents the amount of power available after subtracting attenuation or link loss (LL) from the power budget (P_B). A worst-case estimate of P_M assumes maximum LL:

$P_M = P_B - LL$

P_M greater than zero indicates that the power budget is sufficient to operate the receiver.

Factors that can cause link loss include higher-order mode losses, modal and chromatic dispersion, connectors, splices, and fiber attenuation. Table 30 on page 68 lists an estimated amount of loss for the factors used in the following sample calculations. For information about the actual amount of signal loss caused by equipment and other factors, refer to vendor documentation.

Table 30: Estimated Values for Factors Causing Link Loss

Link-Loss Factor	Estimated Link-Loss Value
Higher-order mode losses	Single mode—None Multimode—0.5 dB
Modal and chromatic dispersion	Single mode—None Multimode—None, if product of bandwidth and distance is less than 500 MHz-km
Faulty connector	0.5 dB

Table 30: Estimated Values for Factors Causing Link Loss *(Continued)*

Link-Loss Factor	Estimated Link-Loss Value
Splice	0.5 dB
Fiber attenuation	Single mode—0.5 dB/km Multimode—1 dB/km

The following sample calculation for a 2-km-long multimode link with a power budget (P_B) of 13 dB uses the estimated values from Table 30 on page 68 . This example calculates link loss (LL) as the sum of fiber attenuation (2 km @ 1 dB/km, or 2 dB) and loss for five connectors (0.5 dB per connector, or 2.5 dB) and two splices (0.5 dB per splice, or 1 dB) as well as higher-order mode losses (0.5 dB). The power margin (P_M) is calculated as follows:

$P_M = P_B - LL$

$P_M = 13\ dB - 2\ km\ (1\ dB/km) - 5\ (0.5\ dB) - 2\ (0.5\ dB) - 0.5\ dB$

$P_M = 13\ dB - 2\ dB - 2.5\ dB - 1\ dB - 0.5\ dB$

$P_M = 7\ dB$

The following sample calculation for an 8-km-long single-mode link with a power budget (P_B) of 13 dB uses the estimated values from Table 30 on page 68 . This example calculates link loss (LL) as the sum of fiber attenuation (8 km @ 0.5 dB/km, or 4 dB) and loss for seven connectors (0.5 dB per connector, or 3.5 dB). The power margin (P_M) is calculated as follows:

$P_M = P_B - LL$

$P_M = 13\ dB - 8\ km\ (0.5\ dB/km) - 7(0.5\ dB)$

$P_M = 13\ dB - 4\ dB - 3.5\ dB$

$P_M = 5.5\ dB$

In both examples, the calculated power margin is greater than zero, indicating that the link has sufficient power for transmission and does not exceed the maximum receiver input power.

ACX7348 Management and Console Port Specifications and Pinouts

SUMMARY

IN THIS SECTION

- Management Cable Specifications for ACX7348 Routers | **70**
- Management Port Connector Pinout Information for ACX7348 Routers | **71**
- Console Port Connector Pinout on ACX7348 Routers | **71**

Management Cable Specifications for ACX7348 Routers

Table 31 on page 70 lists the specifications for the cables that connect the console and management ports to management devices.

Table 31: Specifications of Cables to Connect to Management Devices

Ports	Cable Specifications	Receptacle	Additional Information
Console (**CON**) port	RS-232 (EIA-232) serial cable	RJ-45	"Connect an ACX7348 Router to a Management Console" on page 91
Management (**MGMT**) port	Ethernet cable with an RJ-45 connector	RJ-45	"Connect an ACX7348 Router to a Network for Out-of-Band Management" on page 92

Management Port Connector Pinout Information for ACX7348 Routers

The management port—labeled **MGMT**—on an ACX7348 uses an RJ-45 connector to connect to a management device for out-of-band management.

The port uses an autosensing RJ-45 connector to support a 10/100BASE-T connection.

Table 32 on page 71 provides the pinout information for the RJ-45 connector for the management port.

Table 32: Management Port Connector Pinout Information

Pin	Description	Direction
1	TRP1+	Transmit/receive data pair 1.
2	TRP1–	Transmit/receive data pair 1.
3	TRP2+	Transmit/receive data pair 2.
4	TRP3+	Transmit/receive data pair 3.
5	TRP3–	Transmit/receive data pair 3.
6	TRP2–	Transmit/receive data pair 2.
7	TRP4+	Transmit/receive data pair 4.
8	TRP4–	Transmit/receive data pair 4.

Console Port Connector Pinout on ACX7348 Routers

The port labeled **CON** on the front panel is an RS-232 serial interface that uses an RJ-45 connector to connect to a console management device. The default baud rate for the console port is 9600 baud.

Use a cable with the pinouts described in Table 33 on page 72 to connect an ACX7348 to a console management device.

NOTE: If your laptop or PC does not have a DB-9 plug connector pin and you want to connect your laptop or PC directly to an ACX7348, use a combination of the RJ-45 cable and RJ-45 to DB-9 adapter and a USB to DB-9 plug adapter.

Table 33: Console Port Pinout Information

Pin	Signal	Description
1	RTS	Request to Send
2	DTR	Data Terminal Ready
3	TxD	Transmit Data
4	GND	Signal ground
5	GND	Signal ground
6	RxD	Receive Data
7	DSR	Data Set Ready
8	CTS	Clear to Send

CHAPTER 4

Initial Installation and Configuration

Unpack an ACX7348 Router | 74

Install the ACX7348 in a Rack | 76

Connect ACX7348 to Power | 83

Connect ACX7348 to External Devices | 91

Perform Initial Software Configuration for ACX7348 Routers | 97

Unpack an ACX7348 Router

SUMMARY

Unpack the router using the recommended tools and following the recommended procedure.

IN THIS SECTION

- Unpack the ACX7348 Shipping Pallet | 74
- Compare the ACX7348 Order to the Packing List | 75

Unpack the ACX7348 Shipping Pallet

The ACX7348 router chassis is a rigid sheet-metal structure that houses the hardware components. The chassis ships in a cardboard box that has a wooden pallet base with foam cushioning between the layers. The carton also contains an accessory box and a rack-mount kit.

NOTE: ACX7348 routers are maximally protected inside the shipping carton. Do not unpack the router until you are ready to begin installation.

To unpack the chassis:

1. Move the shipping box to a staging area as close to the installation site as possible. While the chassis is bolted to the pallet, you can use a forklift or pallet jack to move the shipping box. Make sure there is enough space to remove components from the chassis.
2. Position the shipping box with the arrows pointing up.
3. Use a box cutter to slice the nylon straps that secure the shipping box to the pallet.
4. Lift the shipping box off the chassis.
5. Remove the cardboard accessory box.
6. Remove the foam padding from the top of the box.
7. Remove the plastic cover from the router chassis.
8. Use a mechanical lift or unload all of the components manually. Then, manually lift the chassis from the shipping pallet.
9. Unpack the accessory box, and lay out the contents so that they are ready for use.
10. Verify that your order includes all appropriate parts.

11. Save the shipping box and packing materials in case you need to move or ship the router at a later time.

Compare the ACX7348 Order to the Packing List

The router chassis shipment includes a packing list. Check the parts you receive in the shipping crate against the items on the packing list. The packing list specifies the part number and description of each part in your order.

To compare the sales order and packing list against the contents of the chassis shipping crate:

1. Determine the configuration. The parts shipped depend on the configuration you order.
2. Compare the packing list accompanying the chassis with the configuration order.

Table 34: Packing List

Component	Quantity
Router including the mounting brackets	1
9 in. x 12 in. pink bag, ESD)	2
ESD wrist strap with cable	1
SFP transceiver dust cover	48
QSFP transceiver dust cover	8
Chassis mounting screws (M5)	8
Ground lug screws	2
LCD6-14A-L grounding lug	1
DC terminal lugs (for DC installations)	4

Table 34: Packing List *(Continued)*

Component	Quantity
Documentation Roadmap card	1

3. If any part on the packing list is missing, contact your customer service representative, or contact Juniper Networks Customer Care from within the U.S. or Canada by telephone at 1-888-314-5822. For international-dial or direct-dial options in countries without toll-free numbers, see https://www.juniper.net/support/requesting-support.html.

Install the ACX7348 in a Rack

SUMMARY

Use the information in this topic to install the ACX7348 router in a rack.

IN THIS SECTION

- Mount an ACX7348 in a Two-Post Rack | 76
- Mount an ACX7348 in a Four-Post Rack | 78

You can install an ACX7348 router into a two-post rack, four-post rack, or a cabinet.

Mount an ACX7348 in a Two-Post Rack

Be sure that you have the following parts and tools available to install the router:

- Four screws to secure the mounting brackets to the rack—not provided
- A Phillips (+) screwdriver, number 1, 2, or 3, depending on the size of your rack-mounting screws—not provided
- An ESD grounding strap—not provided

NOTE: We ship the ACX7348 routers with preinstalled two-post mounting brackets.

To mount an ACX7348 router on two posts of a rack:

1. Wrap and fasten one end of the ESD wrist strap around your bare wrist, and connect the other end of the strap to the ESD point on the device.
2. Grasp both sides of the router, lift the router, and position it in the rack, aligning the holes of the mounting brackets with the holes in the front post of the rack. Align the bottom hole in both the mounting brackets with a hole in each rack post, making sure that the chassis is level.
3. Secure the mounting brackets to the rack by using four screws appropriate for your rack. Tighten the screws.

Figure 26: Secure the Router Flush with the Posts of the Rack

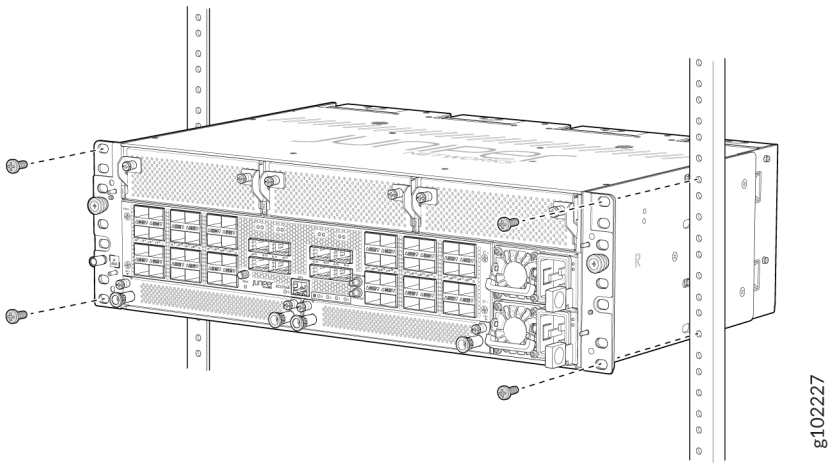

4. Ensure that the chassis is level by verifying that all screws on one side of the rack align with the screws on the other side.

Figure 27: ACX7348 Router Installed in a Two-Post Rack

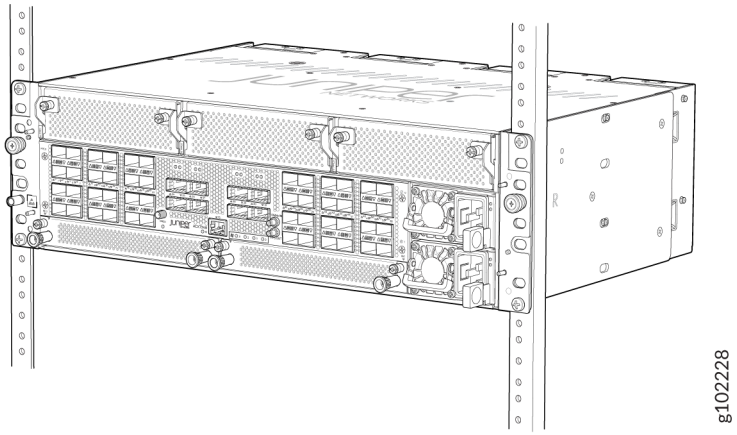

Mount an ACX7348 in a Four-Post Rack

Be sure that you have the following parts and tools available to install the router:

- An ESD grounding strap—not provided
- A Phillips (+) screwdriver—not provided

To install the router in a four-post rack:

1. Wrap and fasten one end of the ESD wrist strap around your bare wrist, and connect the other end of the strap to the ESD point on the device.
2. Using a Phillips screwdriver, remove the screws on each side of the preinstalled two-post mounting brackets to remove the brackets.

Figure 28: Remove the Two-Post Mounting Brackets

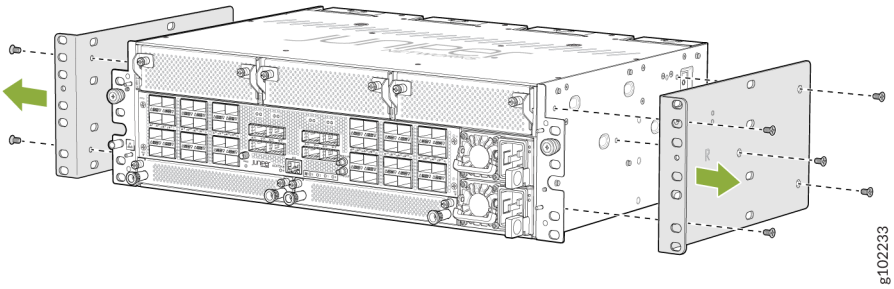

3. Assemble the bracket assembly.

   a. Detach the removable telescopic rail. The telescopic rail assembly consists of three parts. See Figure 29 on page 79 .

Figure 29: Telescopic Rail Assembly

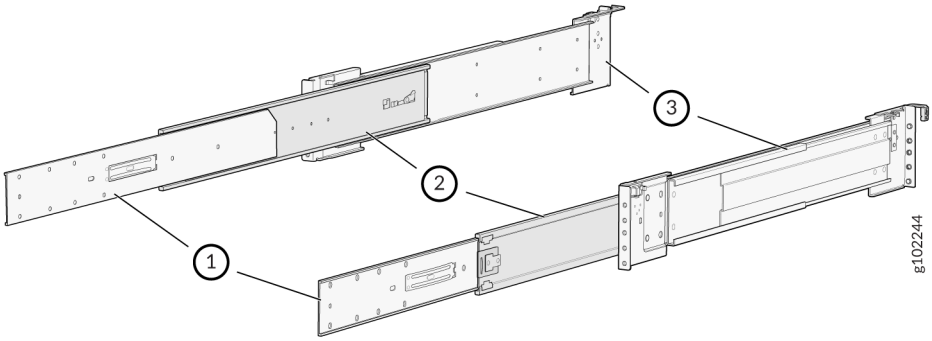

1– Removable telescopic rail bracket	3– Fixed telescopic rail
2– Middle telescopic rail	

   b. Pull out and detach the removable telescopic rail bracket from the telescopic rail assembly.

   c. Place the telescopic rail bracket over the chassis bracket. See Figure 30 on page 80 .

   d. Align the holes on the telescopic rail bracket over the chassis bracket.

   e. Use the screws provided with the telescopic rail brackets to attach the telescopic rail bracket over the chassis bracket.

Figure 30: Assemble the Telescopic Rail Bracket Assembly

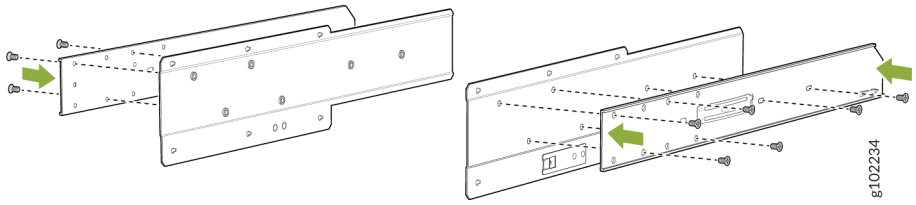

4. Attach the bracket assembly to the chassis.
   a. Align the keyholes in the bracket assembly to the aligned holes on the chassis.
   b. Push the bracket assembly towards the front of the chassis to lock the bracket assembly in place.

Figure 31: Attach the Bracket Assembly to the Chassis

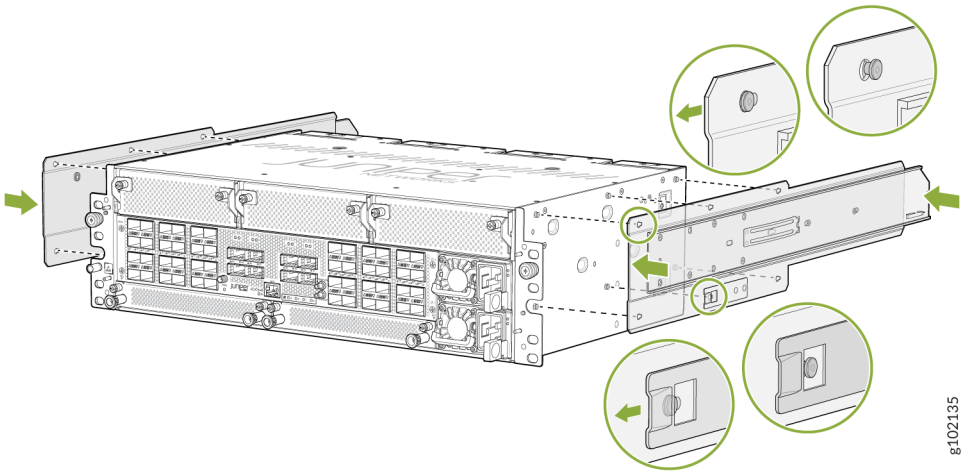

5. Attach the telescopic rails to the rack posts.
   a. Attach the rear end of the telescopic rails into the rear rack posts.
   b. Attach the front end of the telescopic rails into the front rack posts.

Figure 32: Attach the Telescopic Rails to the Rack Rails

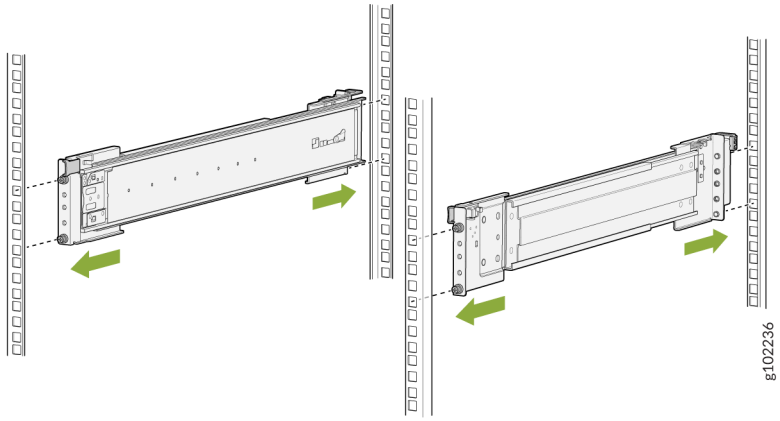

6. Extend the middle telescopic rails until it stops.

Figure 33: Extend the Middle Telescopic Rails

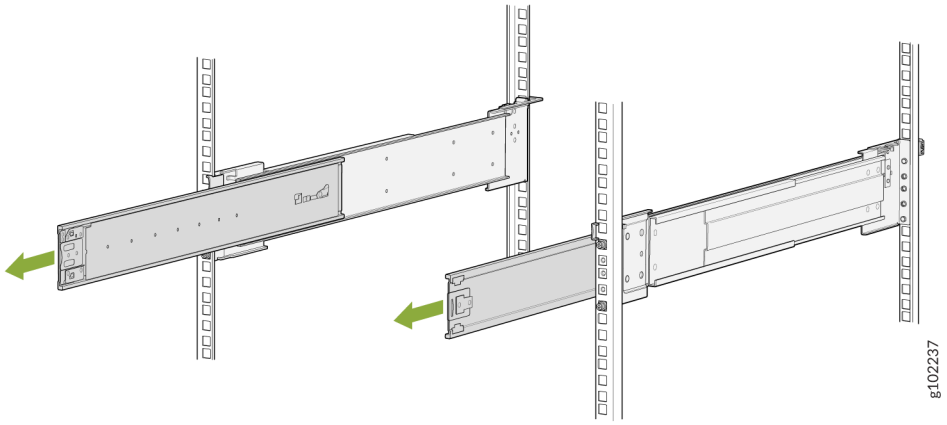

7. Grasp both sides of the router, lift it, and position the router so that the telescopic rail bracket attached to the chassis slides into the channel of the middle telescopic rails.

Figure 34: Slide the Router into the Rack

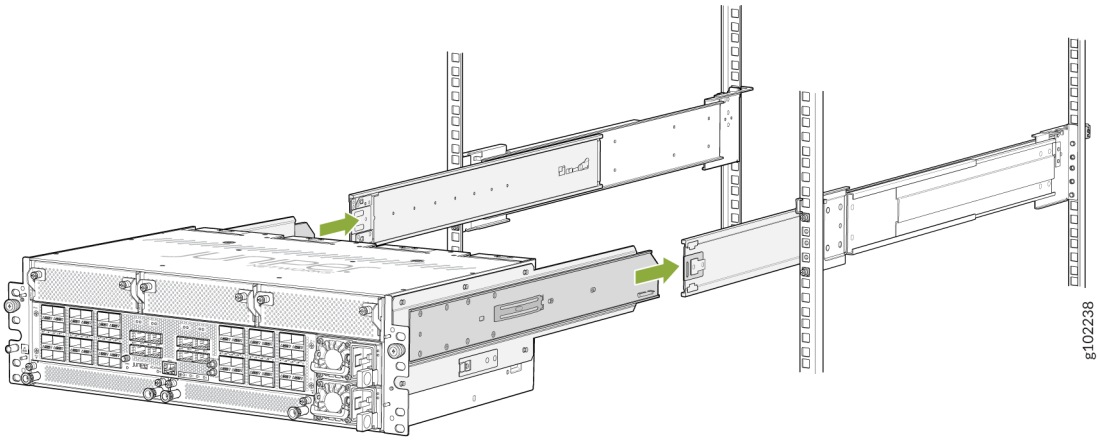

8. Press the latch on the side of the telescopic rail bracket to push the chassis further until the front-mounting ears contact the front rack rails.

Figure 35: Slide the Router into the Rack

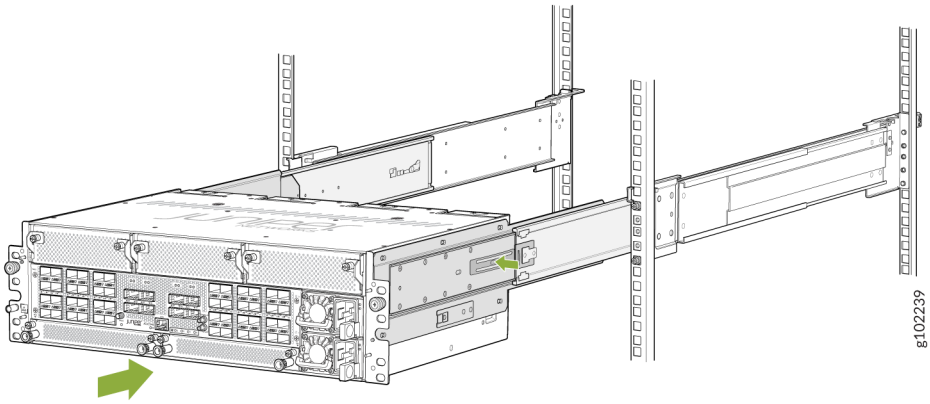

9. Tighten the thumb screws on the mounting ears to secure the device.

Figure 36: ACX7348 Router Installed in a Four-Post Rack

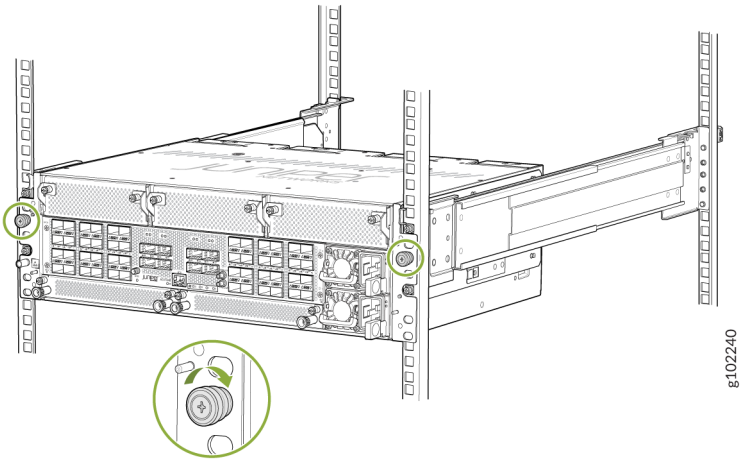

Connect ACX7348 to Power

SUMMARY

Learn how to ground the ACX7348 Router and connect it to AC and DC power.

IN THIS SECTION

- Connect Earth Ground to ACX7348 Routers | **83**
- Connect AC Power to an ACX7348 Router | **85**
- Connect DC Power to an ACX7348 Router | **87**

Connect Earth Ground to ACX7348 Routers

Before you begin to connect the router to earth ground, ensure that you have the following parts and tools available:

- A grounding cable—6 AWG, 90° C stranded copper wire (green with yellow insulation)

- Two grounding screws to secure the grounding lug
- LCD6-14A-L grounding lug
- A Phillips (+) screwdriver, number 2 (not provided)
- An electrostatic discharge (ESD) grounding wrist strap (not provided)

To meet safety and electromagnetic interference (EMI) requirements and to ensure proper operation, you must ground the router properly before connecting power.

You must install the ACX7348 in a restricted-access location and ensure that the chassis is always properly grounded. The ACX7348 has a two-hole protective grounding terminal provided on the chassis (see Figure 37 on page 84). Under all circumstances, use this grounding connection to ground the chassis. For AC-powered systems, you must also use the grounding wire in the AC power cord along with the two-hole grounding lug connection. This tested system meets or exceeds all applicable EMC regulatory requirements with the two-hole protective grounding terminal.

Before you connect earth ground to the protective grounding terminal of an ACX7348 router, ensure that a licensed electrician has attached an appropriate grounding lug to the grounding cable.

Figure 37: Protective Grounding Terminal on the ACX7348 Router

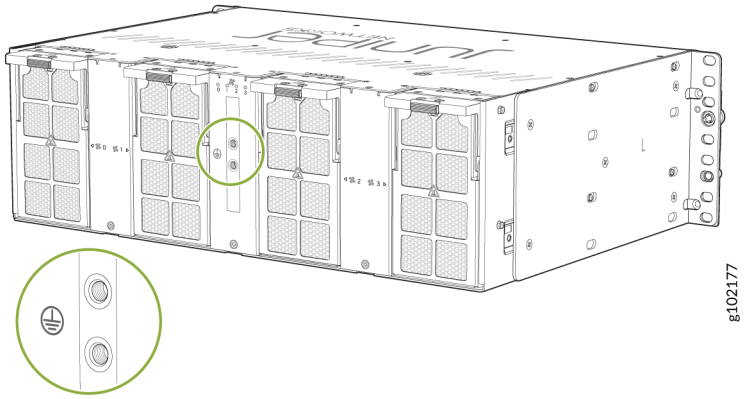

To ground the ACX7348 router:

1. Verify that a licensed electrician has attached the cable lug that is provided with the router to the grounding cable.
2. Ensure that all grounding surfaces are clean and brought to a bright finish before you make grounding connections.
3. Connect the grounding cable to a proper earth ground.
4. Place the grounding cable lug over the two-hole protective grounding terminal on the rear side of the chassis (see Figure 38 on page 85).

Figure 38: Connect the Grounding Cable to the ACX7348 Router

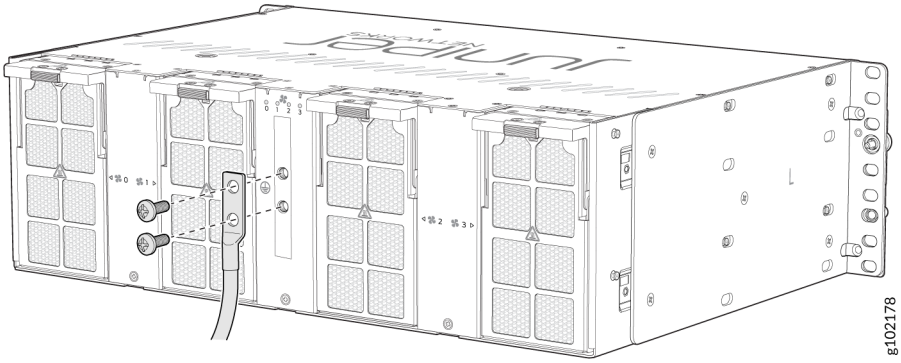

5. Secure the grounding cable lug with the screws.
6. Dress the grounding cable and verify that it does not touch or block access to router components, and that it does not drape where people could trip over it.

Connect AC Power to an ACX7348 Router

Ensure that you have a power cord appropriate for your geographical location available to connect AC power to the router.

Before you begin connecting AC power to the router:

- Ensure that you have taken the necessary precautions to prevent electrostatic discharge (ESD) damage (see Prevention of Electrostatic Discharge Damage).
- Ensure that you have connected the router chassis to earth ground.

> ⚠ **CAUTION**: Before you connect power to the router, a licensed electrician must attach a cable lug to the grounding and power cables that you supply. A cable with an incorrectly attached lug can damage the router (for example, by causing a short circuit).
>
> To meet safety and electromagnetic interference (EMI) requirements and to ensure proper operation, you must connect the chassis to earth ground before you connect it to power. Under all circumstances, use the protective grounding terminal on the router chassis to connect to the earth ground. The router gains additional grounding when you plug the PSM in the router to a grounded AC power outlet by using the AC power cord appropriate for your geographical location.

- Install the power supply module (PSM) in the chassis.

The PSM in an ACX7348 router is a hot-removable and hot-insertable field-replaceable unit (FRU). You can remove and replace it without powering off the router or disrupting routing functions.

To connect AC power to an ACX7348 router:

1. Wrap and fasten one end of the ESD grounding strap around your bare wrist, and connect the other end of the strap to the ESD point on the chassis.
2. Power off the AC input appliance inlet on the source power supply.
3. Connect the power cord to the power source outlet.

> **NOTE**: Each PSM must be connected to a dedicated AC power feed and a dedicated customer-site 2-pole circuit breaker. We recommend that you use a dedicated customer-site circuit breaker rated for 16 A, 250 VAC or as required by local code.

4. Press the small tab on the power cord retainer strip to loosen the loop. Slide the loop until you have enough space to insert the power cord coupler into the inlet.
5. Insert the power cord coupler firmly into the inlet.
6. Slide the loop toward the PSM until it is snug against the base of the coupler.
7. Press the tab on the loop and draw out the loop into a tight circle (see Figure 39 on page 86).
8. Route the power cord appropriately. Verify that the power cord does not block the air exhaust and access to router components, or drape where people could trip over it.
9. Power on the source power supply.
10. Repeat Step 4 through Step 9 for connecting the other PSM to power.

Figure 39: Connect an AC power cord to an ACX7348 Router

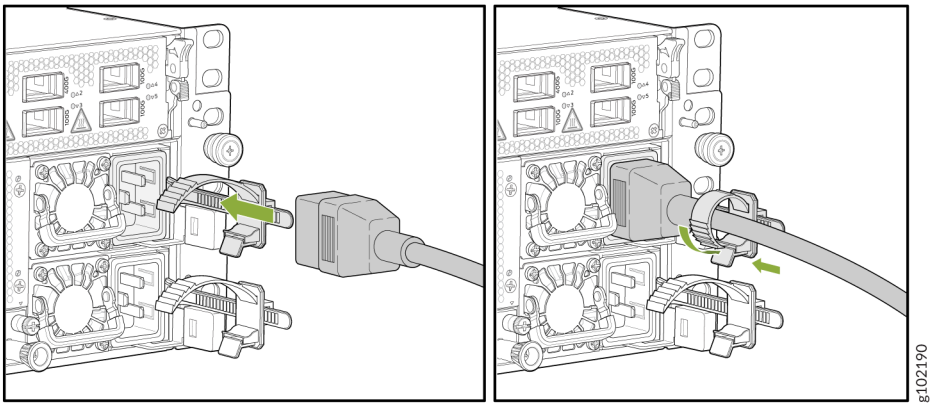

Connect DC Power to an ACX7348 Router

Before you begin connecting DC power to the router:

- Ensure that you have taken the necessary precautions to prevent electrostatic discharge (ESD) damage (see Prevention of Electrostatic Discharge Damage).
- Ensure that you have connected the router chassis to earth ground.

> ⚠ **CAUTION**: Before you connect power to the router, a licensed electrician must attach a cable lug to the grounding and power cables that you supply. A cable with an incorrectly attached lug can damage the router (for example, by causing a short circuit).
>
> To meet safety and electromagnetic interference (EMI) requirements and to ensure proper operation, you must connect the chassis to earth ground before you connect it to power. Under all circumstances, use the protective grounding terminal on the router chassis to connect to the earth ground.

- Install the PSM in the chassis.

Ensure that you have the following parts and tools available:

- Two DC power source cables. The ACX7348 supports a 6 AWG and 90 °C temperature-rated stranded copper wire.
- An electrostatic discharge (ESD) grounding wrist strap (not provided)
- Phillips (+) screwdriver, number 2 (not provided) for tightening screws on the PSM terminals.
- Phillips (+) screwdriver, number 1 (not provided) for tightening the terminal cover screws.
- Multimeter (not provided)

The PSM in an ACX7348 router is a hot-removable and hot-insertable field-replaceable unit (FRU). You can remove and replace it without powering off the router or disrupting routing functions.

To connect DC power to an ACX7348 router:

1. Wrap and fasten one end of the ESD grounding strap around your bare wrist. Connect the other end of the strap to the ESD point on the chassis.
2. Switch off the dedicated customer-site circuit breakers. Ensure that the voltage across the DC power source cable leads is 0 V and that there is no chance that the cable leads might become active during installation.

3. The DC PSM has two terminals labeled **-48V/-60V** (negative) and **RTN** (positive) for connecting the DC power cables labeled positive (+) and negative (-). The terminals are covered by a cover on the terminal block.
4. Using a screwdriver, unscrew (counterclockwise) the nut on top of the terminal block.

Figure 40: Removing the Terminal Block Cover

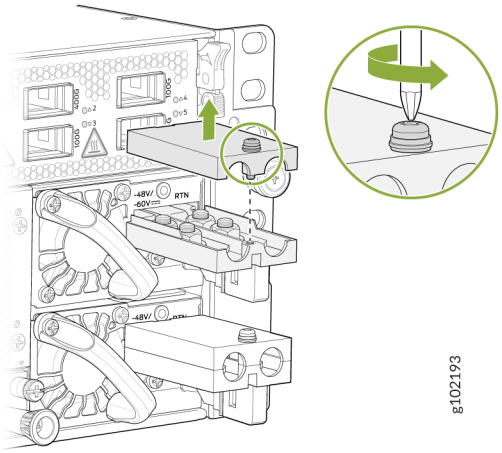

5. Install heat-shrink tubing insulation around the power cables.

   To install heat-shrink tubing:

   a. Slide the tubing over the portion of the cable where it is attached to the lug barrel. Ensure that the tubing covers the end of the wire and the barrel of the lug is attached to it.

   b. Shrink the tubing with a heat gun. Ensure that you heat all sides of the tubing evenly so that it shrinks around the cable tightly.

   Figure 41 on page 89 shows the steps to install heat-shrink tubing.

> **NOTE**: Do not overheat the tubing.

Figure 41: How to Install Heat-Shrink Tubing

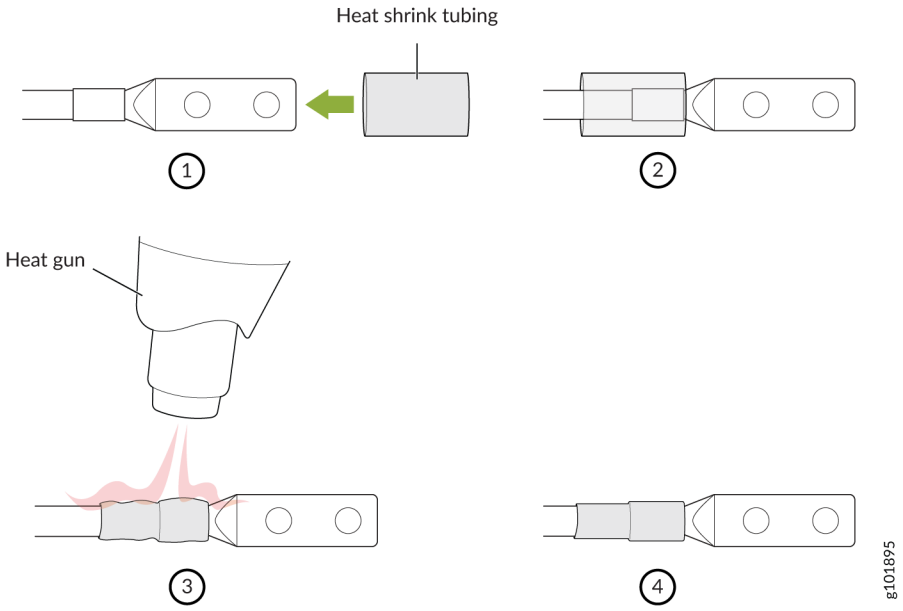

6. Remove the nuts from the four terminals. See Figure 42 on page 89 .

Figure 42: Removing the Nuts from the Terminals

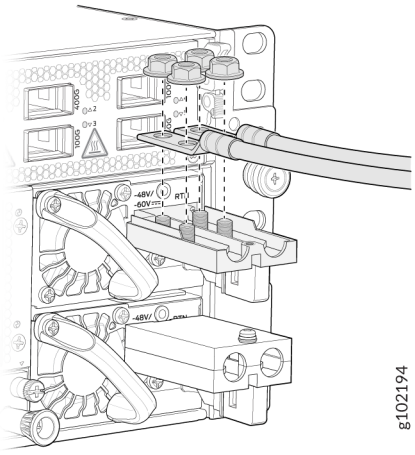

7. Secure each power cable lug to the terminal with the nuts. Tighten the nuts on the power supply terminals until snug by using the screwdriver. Do not apply vertical force while tightening the screws. Do not overtighten the nuts. (Use a socket nutdriver.)

Figure 43: Connecting the DC Cable

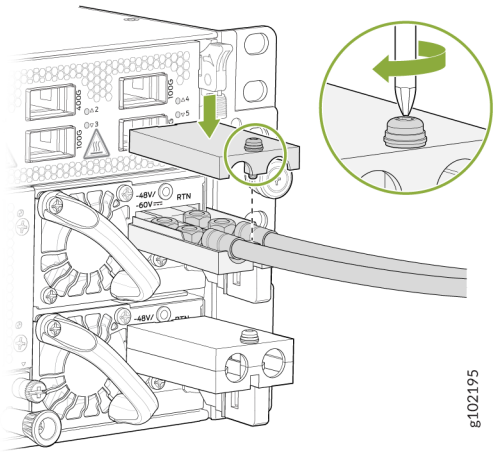

NOTE: To connect the DC source to an ACX7348 router, use a 6 AWG and 90 °C temperature-rated stranded copper wire.

a. Secure the positive (+) DC source power cable lug to the **RTN** (return) terminal.

b. Secure the negative (–) DC source power cable lug to the **–48V/-60V** (input) terminal.

CAUTION: Ensure that each power cable lug seats flush against the surface of the terminal block as you are tightening the nuts. Ensure that each nut is properly threaded into the terminal. Applying installation torque to the nuts when improperly threaded can result in damage to the terminal.

CAUTION: You must ensure that power connections maintain the proper polarity. The power source cables might be labeled **(+)** and **(–)** to indicate their polarity. There is no standard color coding for DC power cables. The color coding used by the external DC power source at your site determines the color coding for the leads on the power cables that attach to the terminal studs on each power supply.

8. Place the terminal block cover on and tighten the screw. See Figure 43 on page 90 .
9. Verify that the power cables are connected correctly, that they are not touching or blocking access to router components, and that they do not drape where people could trip on them.
10. Repeat Step 4 through Step 9 for connecting the other PSM to power.

11. Close the input circuit breaker.
12. Connect the power supply to the power sources.

> ⚠ **CAUTION**: The connection between each power source and PSM must include a circuit breaker. We recommend that you use a customer-site 2-pole circuit breaker rated for 63 A, 80 VDC, or as required by local electrical code.

Connect ACX7348 to External Devices

SUMMARY

You configure and manage the ACX7348 router using a dedicated management channel. The Routing Engine in the ACX7348 router has a console port that you connect to using an Ethernet cable with an RJ-45 connector.

IN THIS SECTION

- Connect an ACX7348 Router to a Management Console | **91**
- Connect an ACX7348 Router to a Network for Out-of-Band Management | **92**
- Connect to 1-PPS and 10-MHz Timing Devices | **93**
- Connect an ACX7348 Router to a GNSS Antenna | **94**

Connect an ACX7348 Router to a Management Console

Each ACX7348 router has a console port with an RJ-45 connector. Use the console port to connect the device to a management console or to a console server.

To connect the ACX7348 router to a management console:

1. Connect one end of the Ethernet cable to the console port (labeled **CON**).
2. Connect the other end of the Ethernet cable into the console server (see Figure 44 on page 92) or management console (see Figure 45 on page 92).

Figure 44: Connect the ACX7348 Router to a Management Console through a Console Server

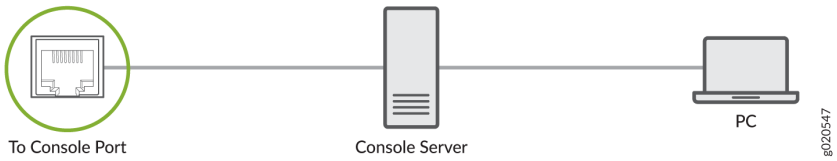

Figure 45: Connect the ACX7348 Router Directly to a Management Console



Connect an ACX7348 Router to a Network for Out-of-Band Management

You can monitor and manage the ACX7348 router by using a dedicated management channel. Use the management ports to connect the ACX7348 router to a network for out-of-band management.

NOTE: You cannot use the management ports to perform the initial configuration of the ACX7348 router. You must configure the management ports before you can successfully connect to the ACX7348 router using these ports. See "Perform Initial Software Configuration for ACX7348 Routers" on page 97 .

To connect an ACX7348 router to a network for out-of-band management:

1. Connect one end of the cable to the management port labeled **MGMT** on the ACX7348 router.
2. Connect the other end of the cable to the management PC (see Figure 46 on page 93).

Figure 46: Connect an ACX7348 Router to a Network for Out-of-Band Management

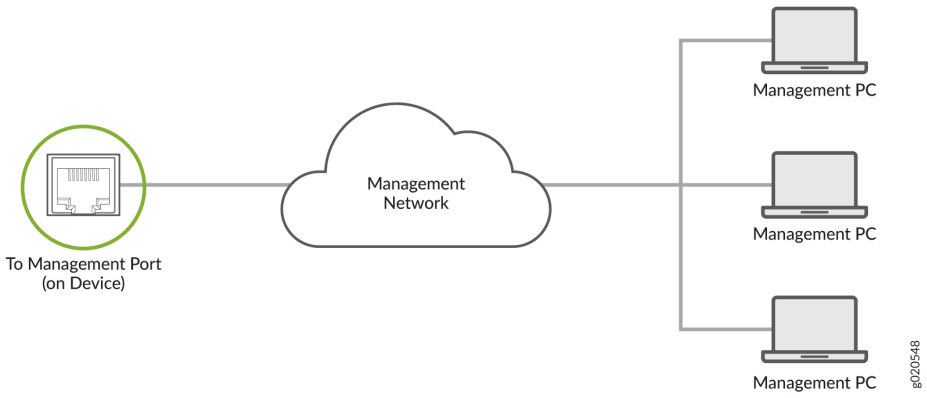

Connect to 1-PPS and 10-MHz Timing Devices

Each ACX7348 router has SubMiniature B (SMB) connector ports that support 1 pulse per second (1-PPS) and 10-megahertz (10-MHz) timing devices.

> **NOTE**: Ensure that you use a cable of 3 m or less in length for the 10-MHz and 1-PPS connectors.

To connect the SMB-to-BNC coaxial cable to the external clocking input port:

1. Connect one end of the SMB-to-BNC coaxial cable to either the 1-PPS connector or the 10-MHz connector on the router.
2. Connect the other end of the SMB-to-BNC coaxial cable to the 1-PPS or 10-MHz measurement equipment.

> **NOTE**: Ensure that the 10-MHz or 1-PPS source network equipment contains a low-voltage complementary metal oxide semiconductor (CMOS) or is compatible with low-voltage (3.3 V) transistor-transistor logic (TTL).

Connect an ACX7348 Router to a GNSS Antenna

IN THIS SECTION

- Gain and Noise Figure (NF) Calculation | 94
- Antenna Cable Specifications | 94
- Cabling Guidelines | 97

Global Navigation Satellite System (GNSS) capability is essential for the Grand Master (GM) clock functionality. The ACX7348 router supports an internal receiver. A GNSS receiver receives signals from a navigation satellite constellation. The GNSS receiver gains precise phase and time information by processing these signals and delivers the information across the network.

You must install a GNSS antenna to ensure optimal signal reception. Juniper supports the Furuno AU-217 antenna. For information about installing the AU-217 antenna, see GNSS Antenna AU-217 Installation Procedure.

Before you connect an ACX7348 router to the external GNSS antenna:

- Understand the antenna cable specifications. See Antenna Cable Specifications.
- Follow the instructions in Cabling Guidelines.

To connect an ACX7348 router to a GNSS antenna:

1. Connect one end of the LMR400 cable to the GNSS connector port (labeled **GNSS**) on the ACX7348 router.
2. Connect the other end of the LMR400 cable to the GNSS antenna. See Figure 47 on page 95 .

Gain and Noise Figure (NF) Calculation

To calculate the total gain and NF, see GNSS Antenna Installation Appendix on the Furuno data download page.

Antenna Cable Specifications

The following topology (Figure 47 on page 95) depicts the antenna cable connections with connector types. Use this topology as an example to install the antenna cables.

Figure 47: LMR400 Cable Connections

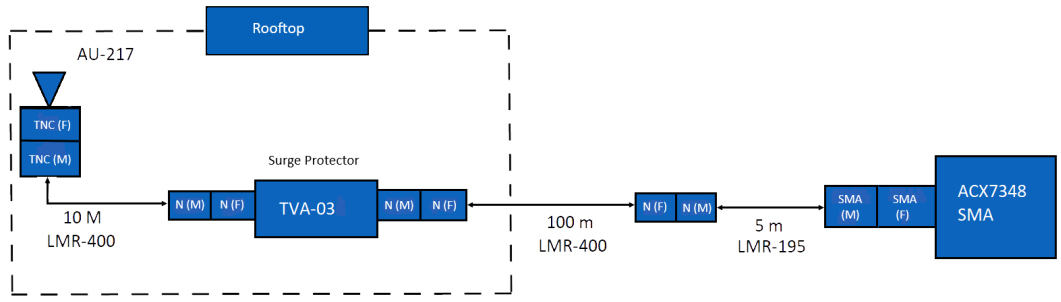

Juniper has tested this topology with the following LMR400 cables:

- LMR400 (10 m segment) from TE Connectivity. For more information, see Figure 48 on page 95 .
- LMR400 (100 m segment) from TE Connectivity. For more information, see Figure 49 on page 96 .
- LMR400 (5 m segment) from TE Connectivity. For more information, see Figure 50 on page 96 .

You must ensure that you install a surge protector to protect the GNSS receiver from lightning surges. This topology uses TVA-03C surge protectors. For more information about the surge protectors, see Coaxial lightning arrestor TVA-03.

Figure 48: LMR400 (10 m Segment) Cable Specifications

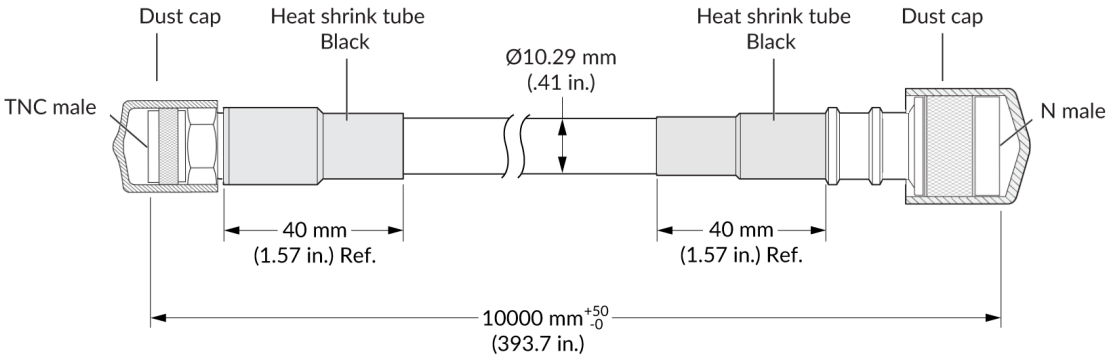

Figure 49: LMR400 (100 m Segment) Cable Specifications

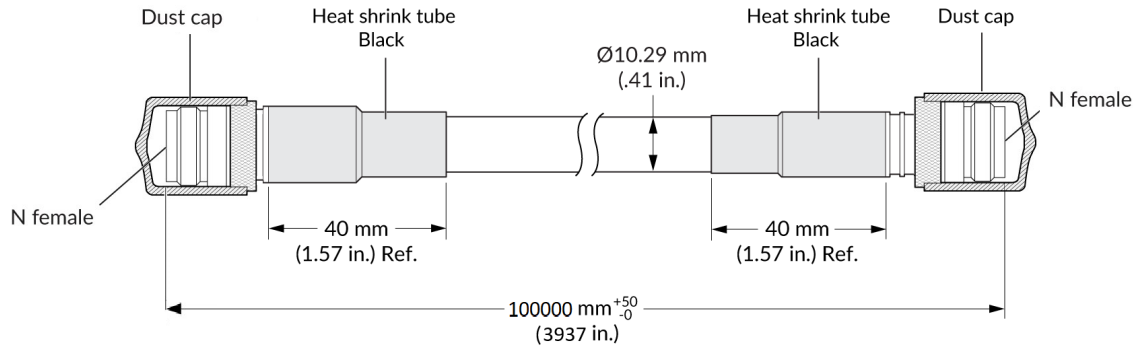

Figure 50: LMR195 (5 m Segment) Cable Specifications

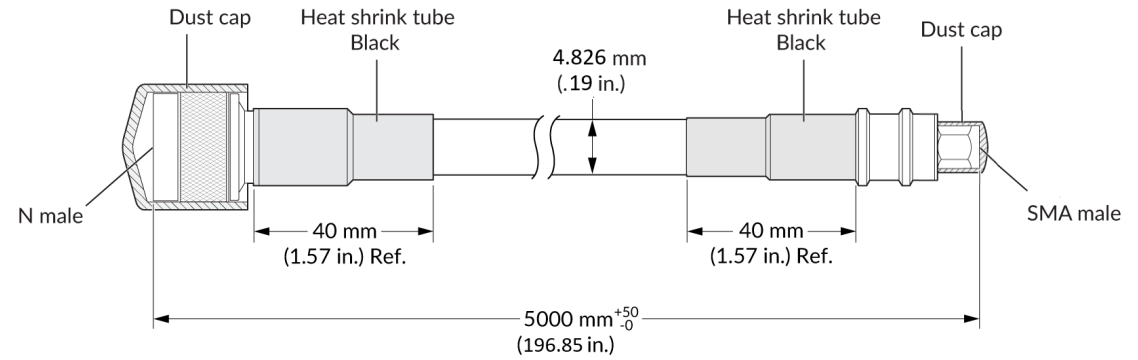

Electrical Characteristics of LMR400 Cable	
Impedance	50 Ω
Frequency	DC-3GHz
Voltage Rating	335 Vrms
Dielectric Withstanding Voltage	> 1000 V

(Continued)

Electrical Characteristics of LMR400 Cable	
Insulation Resistance	> 5000 MΩ

Cabling Guidelines

Follow these guidelines when you install cables:

- Examine the cable end points and connectors for any bends or damage.
- Check the electrical continuity of the cable for both inner and outer conductors.
- Check for any electrical short in cables.
- Inspect the cable outer sheath for any damage.

Perform Initial Software Configuration for ACX7348 Routers

You can easily customize the factory-default configuration with just a few commands. Initially, you'll need to make changes through the console port. After you configure the management port, you can access the ACX7348 using SSH and make additional configuration changes. You can always revert to the factory-default configuration whenever you want.

Have the following information ready before you begin customizing the router:

- Hostname
- Root authentication password
- Management port IP address
- Default gateway IP address
- IP address and prefix length of remote prefixes
- (Optional) SNMP read community, location, and contact information

1. Verify that the following default serial port settings are configured on your laptop or desktop PC:

- Baud Rate—9600
- Flow Control—None
- Data—8
- Parity—None
- Stop Bits—1
- DCD State—Disregard

2. Connect the console port on the ACX7348 to a laptop or a desktop PC using the RJ-45 cable and RJ-45 to DB-9 adapter. The console (**CON**) port is the RJ-45 port on the Routing Engine.

   NOTE: If your laptop or desktop PC doesn't have a serial port, use a serial-to-USB adapter (not provided).

3. At the Junos OS Evolved login prompt, type **root** to log in.

   You don't need to enter a password. If the software boots before you connect your laptop or desktop PC to the console port, you might need to press the Enter key for the prompt to appear.

```
re0 login: root
```

4. Start the CLI.

```
[vrf:none] root@re0:~# cli
```

5. Enter configuration mode.

```
root@re0> configure
```

6. Stop the chassis auto-upgrade process.

```
[edit]
root@re0# delete chassis auto-image-upgrade
```

7. Stop zero-touch provisioning (ZTP).

```
[edit]
root@re0# delete system commit factory-settings
```

NOTE: ZTP is enabled on the ACX7348 in the factory-default configuration. You must stop ZTP before you configure any settings. Until you assign a root password and perform an initial commit, you might see ZTP-related messages on the console. You can safely ignore these messages while you configure the root password.

8. Add a password for the root administration user account.

```
[edit]
root@re0# set system root-authentication plain-text-password
New password: password
Retype new password: password
```

9. Commit the configuration, and wait for the ZTP process to stop.

```
[edit]
root@re0# commit
```

A message appears on the console, confirming that the ZTP process has stopped.

```
[edit]
root@# [  511.430877] ztp.py[13237]: 2023-03-04 05:28:00 INFO: ZTP:(et-0/2/7) DHCP request
timed out
[  511.432804] ztp.py[13237]: 2023-03-04 05:28:00 INFO: ZTP: checkZTPAbort: Upgrade
detected pending abort
[  511.433586] ztp.py[13237]: 2023-03-04 05:28:00 INFO: ZTP: notifier loop user requested
ZTP abort
[  511.485370] ztp.py[13237]: 2023-03-04 05:28:00 INFO: ZTP: exiting
[  511.580800] ztp.py[31898]: Notice: PID found for app ztp in /var/run/pid/ztp.pid is
13237.Executing command: (/usr/sbin/cleanzk -c /var/run/zkid/13237.id;rm /var/run/zkid/
13237.id)
[  512.614206] ztp.py[31898]: rm: cannot remove '/var/run/zkid/13237.id': No such file or
directory
```

10. (Optional) Give the router a name. If the name includes spaces, enclose the name in quotation marks (“ ”).

```
[edit]
root@re0# set system host-name host-name
```

11. Configure the default gateway.

```
[edit]
root@re0# set routing-options static route 0.0.0.0/0 next-hop destination-ip
```

12. Configure the IP address and prefix length for the management port on the router. On the ACX7348, the management port (**MGMT**) is the RJ-45 port on the Routing Engine.

```
[edit]
root@re0# set interfaces re0:mgmt-0 unit 0 family inet address address/prefix-length
```

13. (Optional) Configure specific static routes to remote prefixes if you do not want the remote prefixes to use the default route.

```
[edit]
root@re0# set routing-options static route address/prefix-length next-hop destination-ip
```

14. Enable Telnet service, if required.

```
[edit]
root@re0# set system services telnet
```

NOTE: When Telnet is enabled, you cannot log in to the ACX7348 using root credentials. Root login is allowed only for SSH access.

15. Enable SSH service.

```
[edit]
root@re0# set system services ssh
```

16. To allow users to log in to the router as `root` users through SSH, include the **root-login** statement.

```
[edit system services ssh]
root@re0# root-login (allow)
```

> **NOTE**: By default, users are not allowed to log in to the router as root users through SSH.

17. Commit the configuration.

    Your changed configuration becomes the active configuration for the router.

```
[edit]
root@re0# commit
```

5

CHAPTER

Maintaining Components

ACX7348 Fan Tray Maintenance | 103

ACX7348 Air Filter Unit Maintenance | 106

ACX7348 Power Supply Module Maintenance | 114

ACX7348 Routing Engine Maintenance | 122

ACX7348 Flexible PIC Concentrator Maintenance | 124

ACX7348 Fan Tray Maintenance

SUMMARY

Maintaining the ACX7348 router includes removing and installing fan trays.

IN THIS SECTION

- Remove a Fan Tray from the ACX7348 Router | 103
- Install a Fan Tray in the ACX7348 Router | 105

The ACX7348 router has four independent, field-replaceable fan trays installed on the rear of the chassis. Each fan tray is a hot-removable and hot-insertable field-replaceable unit (FRU), which means that you can remove and replace the fan trays while the router is running. You remove and replace the fan trays without turning off power to the router or disrupting routing functions.

Remove a Fan Tray from the ACX7348 Router

IN THIS SECTION

- Remove a Fan Tray from the Rear of the Chassis | 104
- Remove a Fan Tray from the Front of the Chassis | 104

Before you remove a fan tray:

- Ensure that you understand how to prevent ESD damage.
- Ensure that you have the following parts and tools available to remove a fan tray from the ACX7348 router:
  - Electrostatic discharge (ESD) grounding strap
  - Replacement fan tray

CAUTION: Do not remove the fan tray unless you have a replacement fan tray available.

The fan tray on an ACX7348 router can be accessed from the front or the rear of the chassis.

Remove a Fan Tray from the Rear of the Chassis

To remove a fan tray from the rear of the chassis:

1. Wrap and fasten one end of the ESD grounding strap around your bare wrist, and connect the other end of the strap to one of the ESD points on the chassis.
2. Press the button on the fan tray ejector handle to unlock the fan tray. Pull down the ejector handle and pull the fan tray completely out of the chassis. See Figure 51 on page 104 .

Figure 51: Remove a Fan Tray from an ACX7348 Router

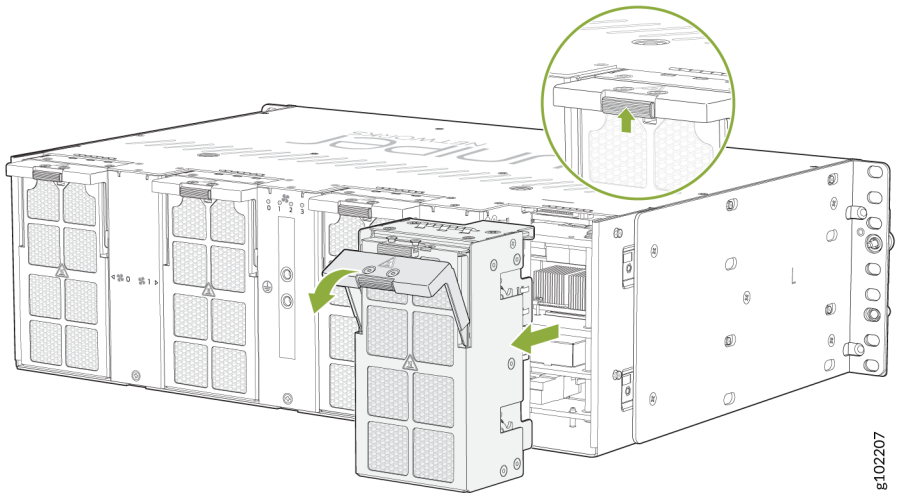

3. Place the fan tray in an antistatic bag or on an antistatic mat placed on a flat, stable surface.

Remove a Fan Tray from the Front of the Chassis

To remove a fan tray from the front of the chassis:

1. Wrap and fasten one end of the ESD grounding strap around your bare wrist, and connect the other end of the strap to one of the ESD points on the chassis.
2. Loosen the thumb screws and completely pull out the chassis.
3. Press the button on the fan tray ejector handle to unlock the fan tray. Pull down the ejector handle and pull the fan tray completely out of the chassis.

Figure 52: Remove the Fan Tray

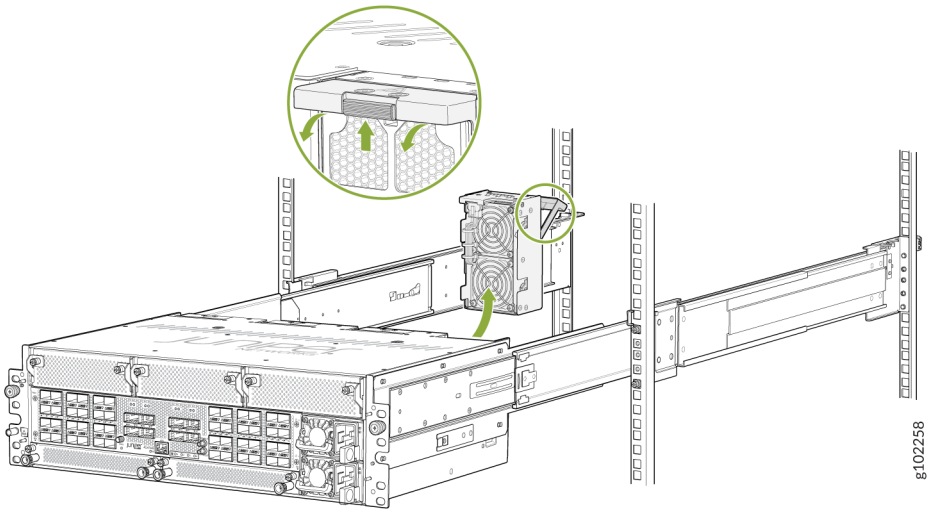

4. Place the fan tray in an antistatic bag or on an antistatic mat placed on a flat, stable surface.

> **NOTE**: The fan tray LED will turn off when a fan tray is removed.

Install a Fan Tray in the ACX7348 Router

Before you begin to install a fan tray:

- Ensure that you understand how to prevent ESD damage.
- Ensure that you have the following parts and tools available to install a fan tray in an ACX7348 router:
  - Electrostatic discharge (ESD) grounding strap
  - A replacement fan tray

To install an ACX7348 fan tray:

1. Wrap and fasten one end of the ESD grounding strap around your bare wrist, and connect the other end of the strap to one of the ESD points on the chassis.
2. Rest the bottom edge of the fan tray in the slot and slide the fan tray into place so it is fully seated.
3. Push the ejector handle upwards until it snaps in place. See Figure 53 on page 106 .

NOTE: The fan tray LED will glow green when a fan tray is inserted.

Figure 53: Install a Fan Tray in an ACX7348 Router

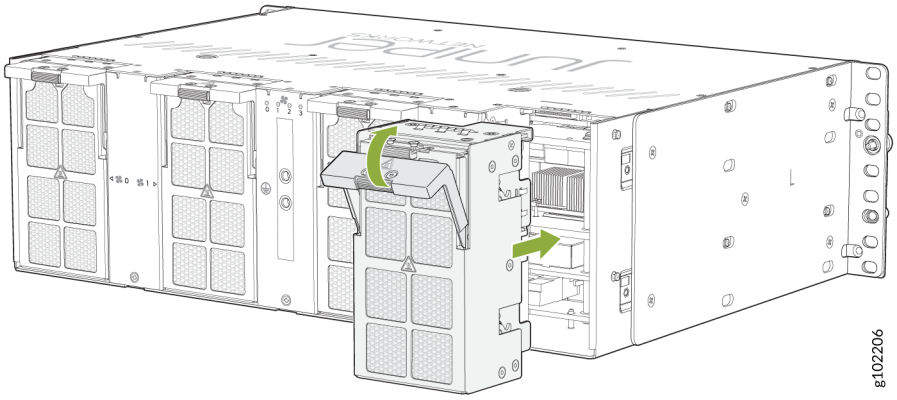

ACX7348 Air Filter Unit Maintenance

SUMMARY

Learn how to install the air filter unit and replace the air filter.

IN THIS SECTION

- Install Air Filter Unit in a Two-Post Rack | **107**
- Install Air Filter Unit in a Four-Post Rack | **109**
- Replace the Air Filter | **112**

The air filter unit consists of four parts: the outer filter cover, the air filter, the inner cage, and the cable management brackets. The air filter sits right inside the outer filter cover and the inner cage. The air filter unit is installed in the front of the chassis and is secured to the rack rails by captive screws.

Figure 54: Air Filter Unit

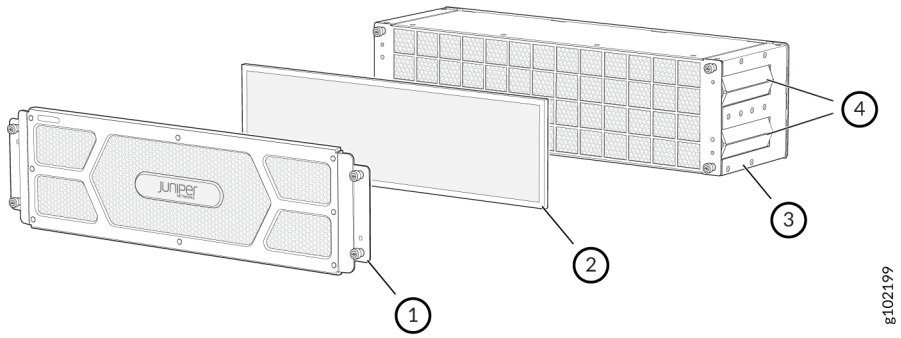

1– Outer filter cover	3– Inner cage
2– Air filter	4– Cable management brackets

NOTE: You must replace the air filter every 6 months.

Install Air Filter Unit in a Two-Post Rack

To install an air filter unit in a two-post rack:

1. Attach an electrostatic discharge (ESD) grounding strap to your bare wrist, and connect the strap to one of the ESD points on the chassis.
2. Attach the cable management brackets on each side of the chassis.

Figure 55: Attach the Cable Management Brackets to the Chassis

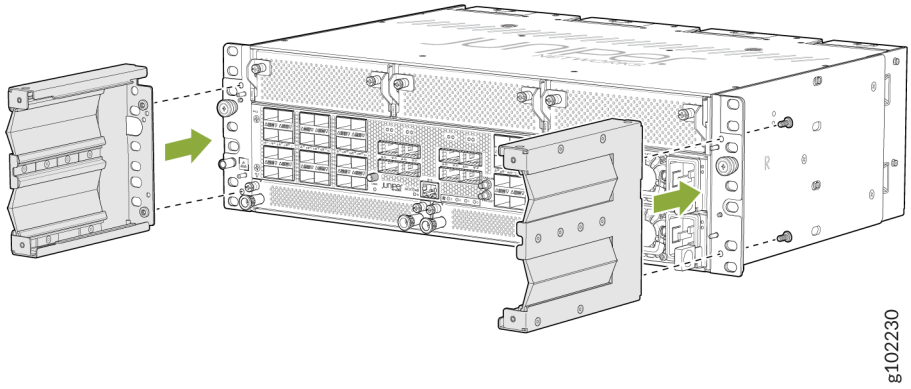

3. Grasp both sides of the router, lift the router, and position it in the rack, aligning the holes of the mounting brackets with the holes in the front post of the rack. Align the bottom hole in both the mounting brackets with a hole in each rack post, making sure that the chassis is level.

Figure 56: Mount the Chassis to the Rack

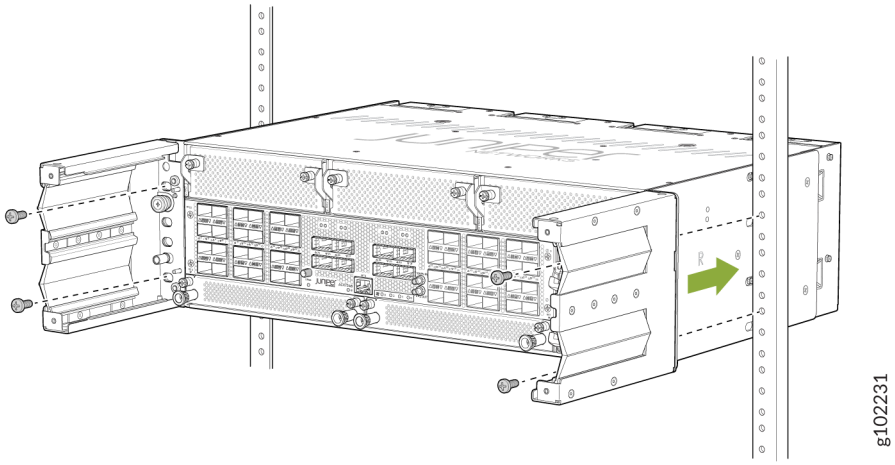

4. Secure the mounting brackets to the rack by using four screws appropriate for your rack. Tighten the screws.
5. Slide the outer cage of the air filter unit into the rails on the cable management brackets until it stops.

Figure 57: Install the Air Filter

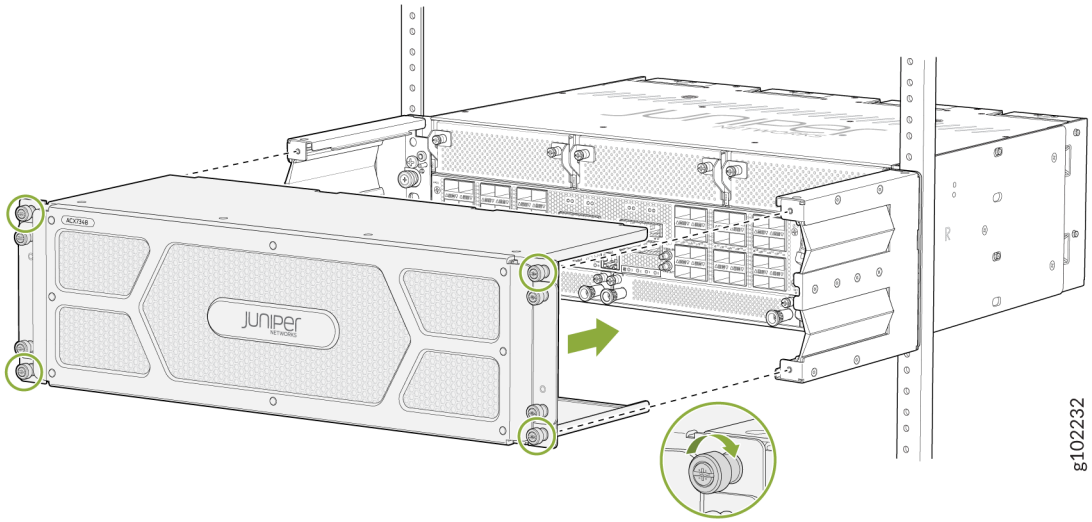

6. Tighten the captive screws to secure the air filter unit to the cable management brackets.

Install Air Filter Unit in a Four-Post Rack

To install an air filter unit in a four-post rack:

1. After the chassis is already installed on a 4-post rack, loosen the thumb screws and pull out the chassis.

Figure 58: Loosen the Thumb Screws

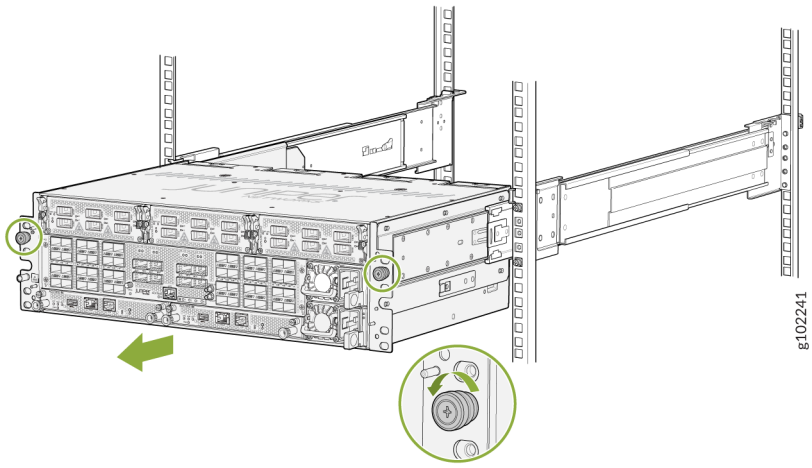

2. Attach the cable management brackets on both sides of the chassis.

Figure 59: Attach Cable Management Brackets on the Chassis

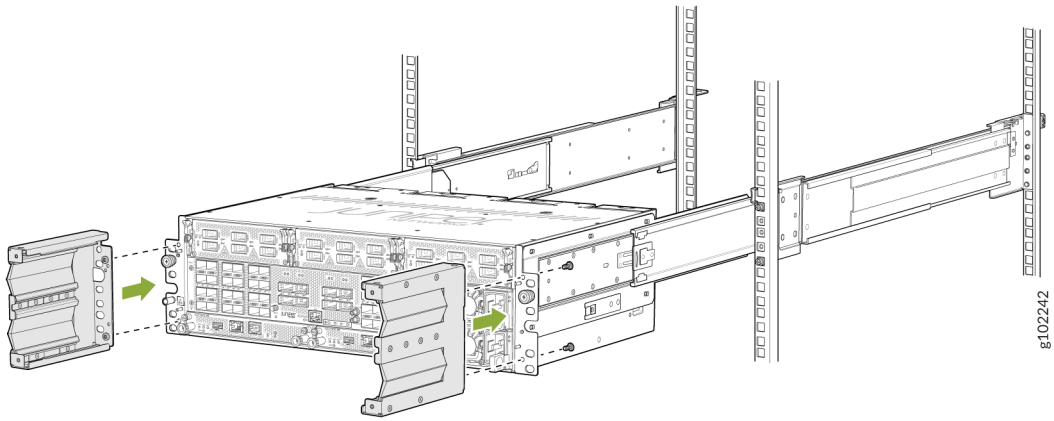

3. Push the chassis back (with the cable management brackets installed) and tighten the thumb screws to secure the device to the 4 post rack.

Figure 60: Tighten the Thumb Screws

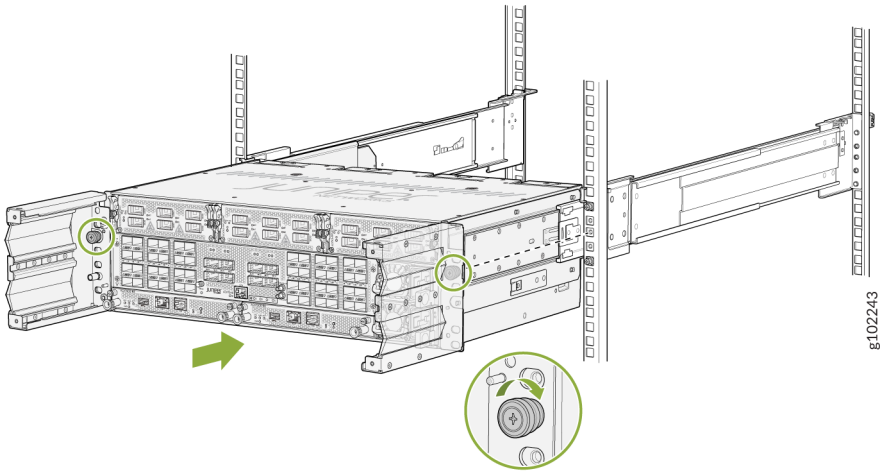

4. Slide the outer cage into the rails on the cable management brackets until it stops.

Figure 61: Attach the Filter Door

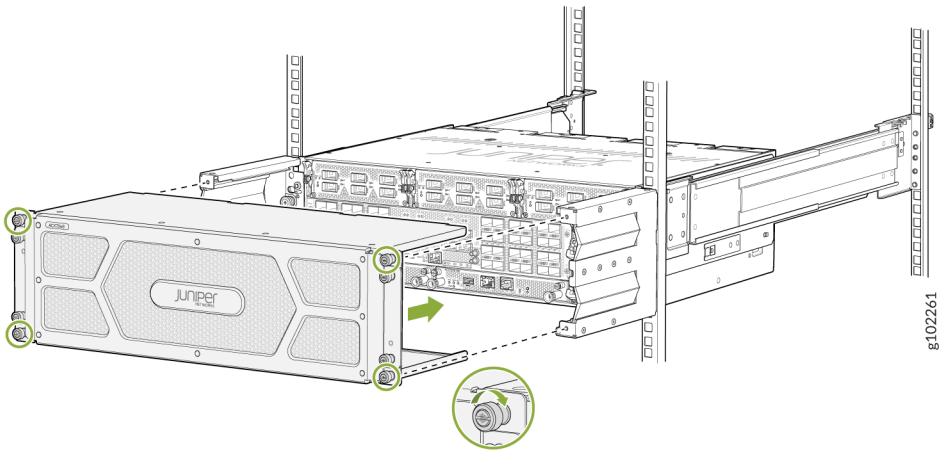

5. Tighten the captive screws to secure the air filter unit to the cable management brackets.

Replace the Air Filter

IN THIS SECTION

- Remove the Air Filter | 112
- Install the Air Filter | 113

The air filter sits right inside the outer filter cover and the inner cage. The air filter unit is installed into the cable management brackets, and is held tightly by captive screws.

NOTE: You must replace the air filter every 6 months.

Remove the Air Filter

To remove the air filter:

1. Attach an electrostatic discharge (ESD) grounding strap to your bare wrist, and connect the strap to one of the ESD points on the chassis.
2. On the front of the router, loosen the captive screws on each side of the air filter unit.
3. Remove the outer air filter cover by grasping the head of the loosened screws, and pulling it out. The air filter is located at the center of the air filter unit, and just behind the outer filter cover. See Figure 54 on page 107 .
4. Pull the air filter straight out from the air filter unit. See Figure 62 on page 113 .

Figure 62: Remove the Air Filter from the Chassis

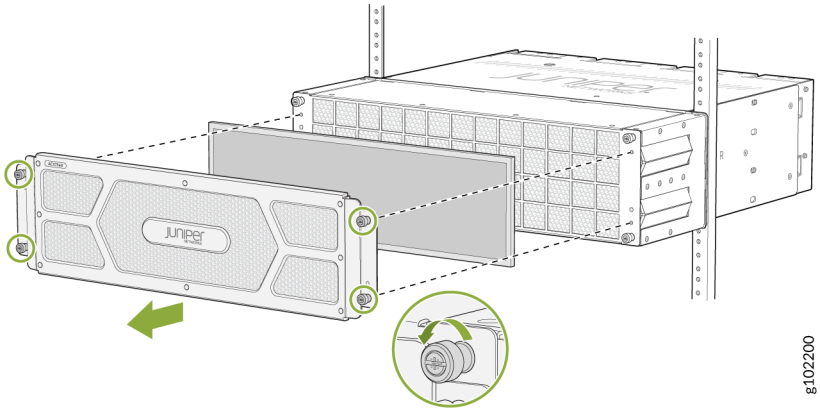

Install the Air Filter

To install the air filter:

1. Attach an electrostatic discharge (ESD) grounding strap to your bare wrist, and connect the strap to one of the ESD points on the chassis.
2. On the front of the router, loosen the captive screws on each side of the air filter unit.
3. Grasp the head of the loosened screws, and pull out the outer air filter cover. The air filter is installed at the center of the air filter unit, just behind the outer filter cover. See Figure 54 on page 107 .
4. Slide the air filter straight onto inner filter cage. See Figure 63 on page 113 .

Figure 63: Install the Air Filter

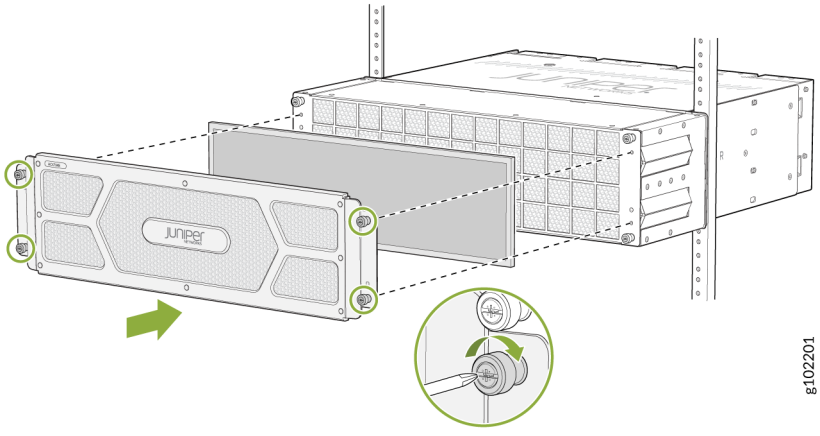

5. Place the outer air filter cover back into its place, and tighten the captive screws to secure the air filter unit.

ACX7348 Power Supply Module Maintenance

SUMMARY

Maintaining an ACX7348 router includes replacing power supplies. Replacing includes removing a failed power supply and installing a functional power supply.

IN THIS SECTION

- Remove an ACX7348 AC Power Supply Module | **114**
- Install an ACX7348 AC Power Supply Module | **115**
- Remove an ACX7348 DC Power Supply Module | **117**
- Install an ACX7348 DC Power Supply Module | **119**

The power supply modules (PSMs) in an ACX7348 router are hot-removable and hot-insertable field-replaceable units (FRUs). You can remove and replace the PSMs without powering off the router or disrupting routing functions.

- "Remove an ACX7348 AC Power Supply Module" on page 114
- "Install an ACX7348 AC Power Supply Module " on page 115
- "Remove an ACX7348 DC Power Supply Module" on page 117
- "Install an ACX7348 DC Power Supply Module" on page 119

Remove an ACX7348 AC Power Supply Module

Before you remove a PSM from a router, ensure that you have taken the necessary precautions to prevent electrostatic discharge (ESD) damage (see Prevention of Electrostatic Discharge Damage).

Ensure that you have the following parts and tools available to remove a PSM from a router:

- ESD grounding strap
- Antistatic bag or an antistatic mat

To remove an AC PSM from an ACX7348 router:

1. Place the antistatic bag or the antistatic mat on a flat, stable surface.

2. Wrap and fasten one end of the ESD grounding strap around your bare wrist, and connect the other end of the strap to the ESD point on the chassis.
3. Disconnect power to the router. If the AC power source outlet has a power switch, set it to the off (**O**) position. If the AC power source outlet does not have a power switch, gently pull out the power cord plug connected to the power source outlet.
4. Remove the power source cable from the power supply faceplate. Remove the power cord from the power supply faceplate by gently pulling out the socket end of the power cord connected to the power supply faceplate.
5. Slide the ejector lever toward the handle until you can no longer slide it (see Figure 64 on page 115).

Figure 64: Remove an AC PSM from the ACX7348 Router

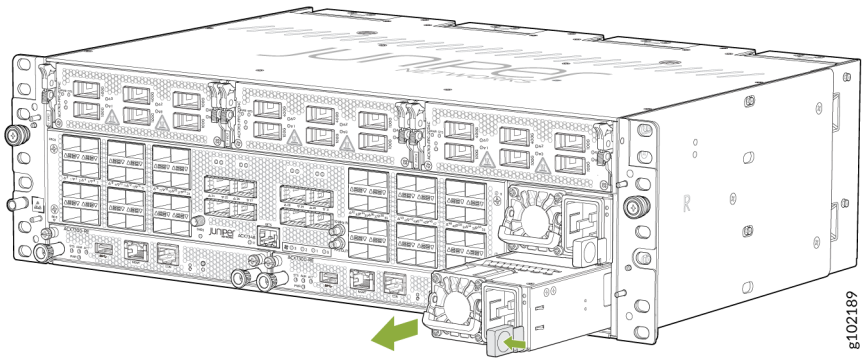

6. Grasp the PSM handle and pull firmly to slide the PSM halfway out of the chassis.
7. Place one hand under the PSM to support it and slide it completely out of the chassis. Take care not to touch power supply components, pins, leads, or solder connections.
8. Place the PSM in the antistatic bag or on the antistatic mat placed on a flat, stable surface.

Install an ACX7348 AC Power Supply Module

Before you install a PSM in a router, ensure that you have taken the necessary precautions to prevent electrostatic discharge (ESD) damage (see Prevention of Electrostatic Discharge Damage).

To install an AC PSM in an ACX7348 router:

1. Wrap and fasten one end of the ESD grounding strap around your bare wrist, and connect the other end of the strap to the ESD point on the chassis.

2. Taking care not to touch power supply components, pins, leads, or solder connections, remove the PSM from its bag.
3. Using both hands, place the PSM in the power supply slot on the front panel of the router and slide it in until it is fully seated and the ejector lever slides into place (see Figure 65 on page 116).

Figure 65: Install an AC PSM in an ACX7348 Router

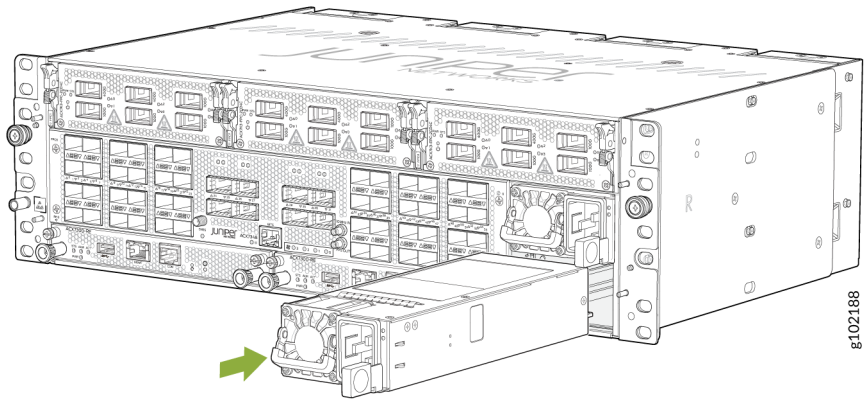

4. Attach the power cord to the PSM (see Figure 66 on page 116).

Figure 66: Install an AC Power Cord on an ACX7348 Router

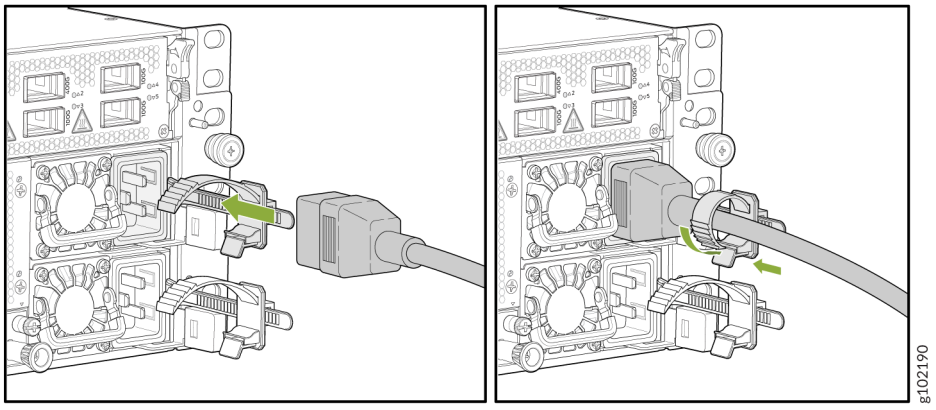

5. Attach the power cord to the AC power source, and switch on the dedicated customer-site 2-pole circuit breaker.

> **NOTE**: Each PSM must be connected to a dedicated AC power feed and a dedicated customer-site 2-pole circuit breaker. We recommend that you use a dedicated customer-site circuit breaker rated for 16 A and 250 V or as required by local code.

6. Observe the status LED on the power supply faceplate. If the PSM is correctly installed and functioning normally, the status LED lights green steadily.

Remove an ACX7348 DC Power Supply Module

Before you remove a power supply module (PSM), be aware of the following:

> **NOTE**: The minimum required number of PSMs must always be present in the router.

> **WARNING**: Before performing DC power procedures, ensure that power is removed from the DC circuit. To ensure that all power is off, locate the two-pole circuit breaker on the panel board that services the DC circuit, switch the circuit breaker to the off position, and tape the switch handle of the circuit breaker in the off position.

To remove a DC PSM:

1. Switch off the dedicated customer-site two-pole circuit breaker for the PSM being removed. Follow your site's procedures for preventing ESD damage.
2. Make sure that the voltage across the DC power source cable leads is 0 V and that there is no chance that the cables might become active during the removal process.
3. Verify that the LED on the PSM is unlit.
4. Wrap and fasten one end of the ESD grounding strap around your bare wrist, and connect the other end of the strap to the ESD point on the chassis.
5. Remove the terminal block cover protecting the terminals on the faceplate.
6. Using a Phillips screwdriver, remove the nuts from the DC power terminals.

Figure 67: Removing the Nuts from the Terminals

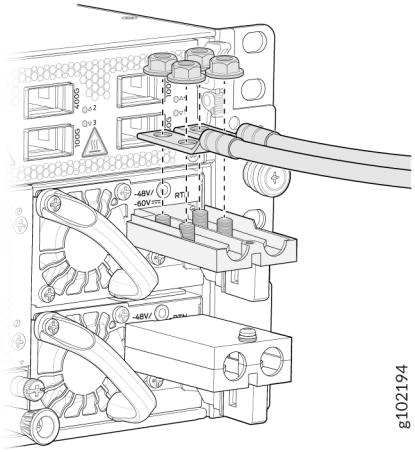

7. Remove the cable lugs from the terminals.
8. Carefully move the power cables out of the way.
9. Press the ejector lever located on the DC PSM, to release it from the chassis.

Figure 68: Remove a DC PSM from an ACX7348 Router

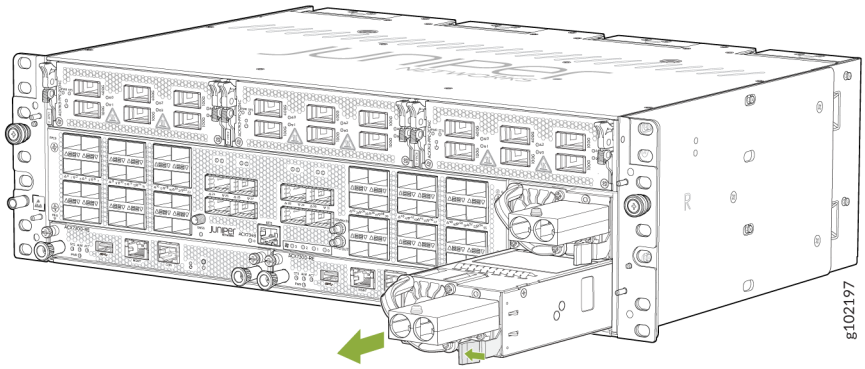

10. Pull the PSM straight out of the chassis.
11. Place the PSM in the antistatic bag or on the antistatic mat placed on a flat, stable surface.

Install an ACX7348 DC Power Supply Module

WARNING: Before performing DC power procedures, ensure that power is removed from the DC circuit. To ensure that all power is off, locate the circuit breaker on the panel board that services the DC circuit, switch the circuit breaker to the off position, and tape the switch handle of the circuit breaker in the off position.

To install a DC PSM:

1. Ensure that the voltage across the DC power source cable leads is 0 V and that there is no chance that the cable leads might become active during installation.
2. Wrap and fasten one end of the ESD grounding strap around your bare wrist, and connect the other end of the strap to the ESD point on the chassis.
3. Using both hands, slide the DC PSM straight into the slot on the front panel of the chassis until the PSM is fully seated in the slot.

Figure 69: Install a DC PSM in an ACX7348 Router

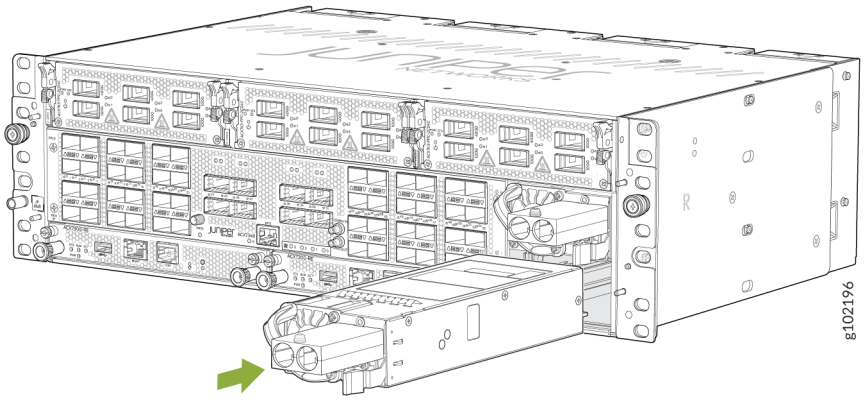

4. Connect to power.
   a. Remove the terminal block cover protecting the terminals on the faceplate.

Figure 70: Removing the Terminal Block Cover

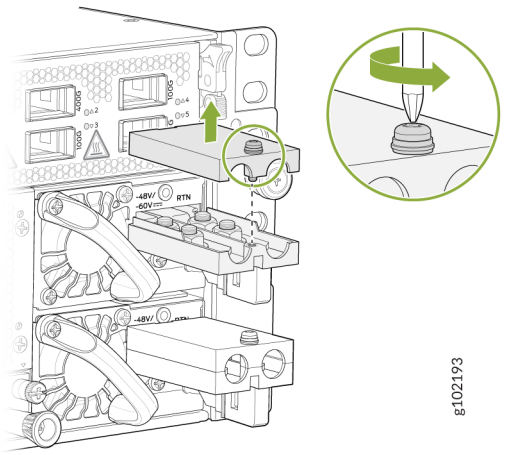

b. Remove the nuts from the terminals.

Figure 71: Removing the Nuts from the Terminals

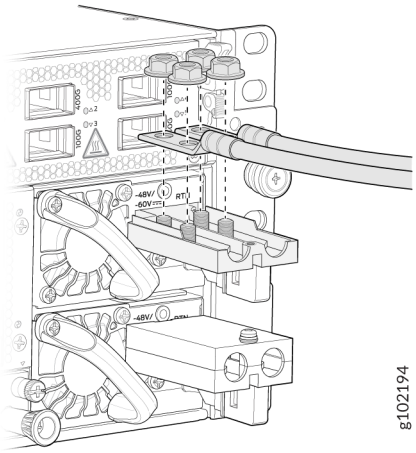

c. Secure each power cable lug to the terminal with the nuts. Tighten the nuts on the power supply terminals until snug by using the screwdriver. Do not apply vertical force while tightening the screws. Do not overtighten the nuts. (Use a socket nutdriver.)

   i. Secure the positive (+) DC source power cable lug to the **RTN** (return) terminal.

   ii. Secure the negative (–) DC source power cable lug to the **–48V/-60V** (input) terminal.

CAUTION: Ensure that each power cable lug seats flush against the surface of the terminal block as you are tightening the nuts. Ensure that each nut is properly threaded into the terminal. Applying installation torque to the nuts when improperly threaded can result in damage to the terminal.

CAUTION: You must ensure that power connections maintain the proper polarity. The power source cables might be labeled **(+)** and **(–)** to indicate their polarity. There is no standard color coding for DC power cables. The color coding used by the external DC power source at your site determines the color coding for the leads on the power cables that attach to the terminal studs on each power supply.

d. Replace the terminal block cover over the terminals on the faceplate.

Figure 72: Connecting the DC Cable

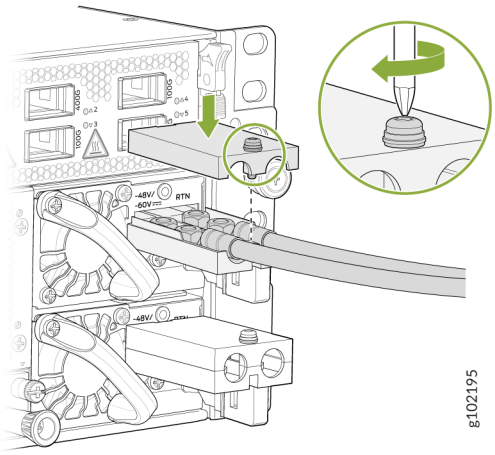

5. Verify that the power cabling is correct, that the cables do not touch or block access to router components, and that the cables do not drape where people could trip over them.
6. Attach the power cable to the DC power source. Then switch on the dedicated customer-site two-pole circuit breaker.

NOTE: The connection between each power source and PSM must include a circuit breaker. We recommend that you use a customer-site 2-pole circuit breaker rated for 63 A and 80 V, or as required by local electrical code.

7. Observe the LED on the power supply faceplate. If the PSM is installed correctly and is functioning normally, the LED lights green steadily.

ACX7348 Routing Engine Maintenance

SUMMARY

Maintaining an ACX7348 router includes removing and installing the Routing Engine.

IN THIS SECTION

- Remove the Routing Engine from the ACX7348 Router | **122**
- Install the Routing Engine in the ACX7348 Router | **123**

The ACX7348 router is shipped with one or two Routing Engines preinstalled in the chassis, depending on the configuration. You can install the Routing Engines in the two bottom slots on the front of the chassis.

- "Remove the Routing Engine from the ACX7348 Router" on page 122
- "Install the Routing Engine in the ACX7348 Router" on page 123

Remove the Routing Engine from the ACX7348 Router

Before you remove a Routing Engine, ensure that you have an electrostatic discharge (ESD) grounding strap.

To remove a Routing Engine:

1. Take the Routing Engine offline.
2. Place an antistatic bag or antistatic mat on a flat, stable surface.

3. Wrap and fasten one end of the ESD grounding strap around your bare wrist, and connect the other end of the strap to one of the ESD points on the chassis.
4. Rotate the thumb screws counter-clockwise to loosen the screws (see Figure 73 on page 123).
5. Grasp both ejector handles and slide the Routing Engine about halfway out of the chassis.

Figure 73: Removing a Routing Engine from the ACX7348 Router

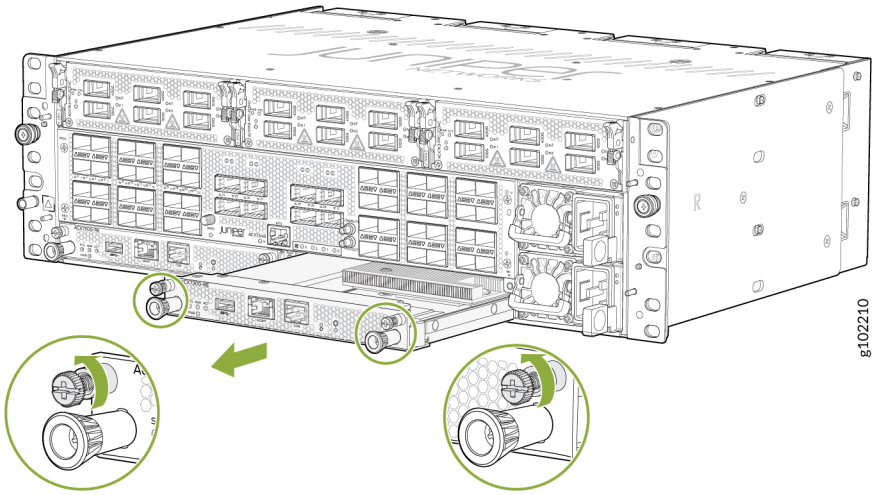

6. Grasp the ejector handle with one hand, and place your other hand under the Routing Engine for support as you slide it completely out of the chassis.
7. Place the Routing Engine on the antistatic mat.
8. If you are not replacing the Routing Engine immediately, install a cover in the empty slot.

Install the Routing Engine in the ACX7348 Router

Before you install a Routing Engine, ensure that you have an electrostatic discharge (ESD) grounding strap.

To install a Routing Engine:

1. Wrap and fasten one end of the ESD grounding strap around your bare wrist, and connect the other end of the strap to one of the ESD points on the chassis.
2. If a Routing Engine blank is installed, press the handles on the blank and gently pull out the blank from the slot.
3. Remove the new Routing Engine from the antistatic bag, and inspect it for any damage before installing it in the chassis.

4. Lift the Routing Engine by its sides, being careful not to bump the connectors.
5. Slide the Routing Engine into the chassis, carefully ensuring that it is correctly aligned.

Figure 74: Installing a Routing Engine

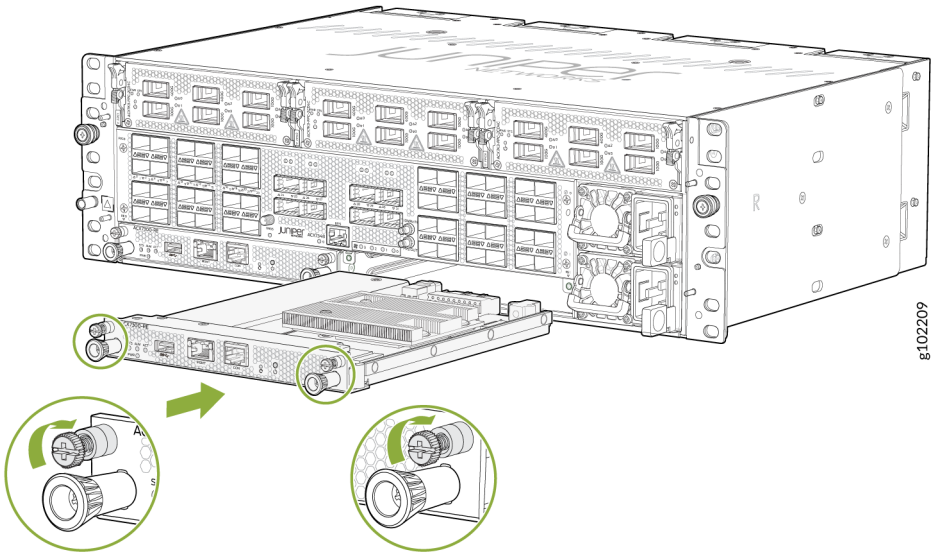

6. Tighten the thumb screws on the left and right of the Routing Engine.
7. To verify that the Routing Engine is functioning normally, check the **PWR** LED and the **STS** LED on its faceplate. Both LEDs should light steadily, shortly after the Routing Engine is installed.

ACX7348 Flexible PIC Concentrator Maintenance

SUMMARY

In this section learn how to remove and reinstall Flexible PIC Concentrators (FPCs).

IN THIS SECTION

- Remove a Flexible PIC Concentrator from the ACX7348 Router | **125**
- Install a Flexible PIC Concentrator in the ACX7348 Router | **127**

Flexible PIC Concentrators (FPCs) on the ACX7348 router are field-replaceable units (FRUs) that can be installed in FPC slots on the front of the chassis. The FPCs are hot-pluggable—you can remove and replace them without powering off the router.

Before you replace an FPC from the router chassis:

- Ensure that you have taken the necessary precautions to prevent electrostatic discharge (ESD) damage.
- If there are any optical cables (including transceivers) installed in the FPC, remove them before you replace the FPC.
- Ensure that you have the following equipment available before replacing an FPC:
  - Antistatic bag or antistatic mat
  - Replacement FPC or a cover for the empty slot
  - ESD grounding strap to wrap around your bare wrist and connect to an ESD point on the chassis

Figure 75: ESD Point on an ACX7348 Router

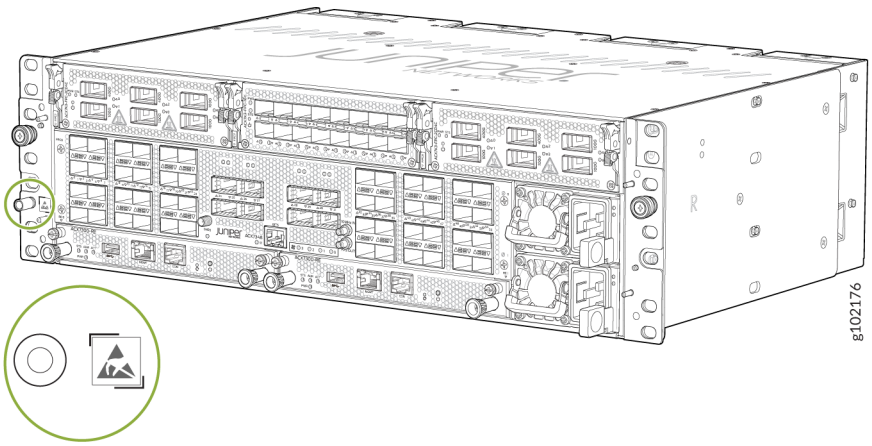

Remove a Flexible PIC Concentrator from the ACX7348 Router

To remove an FPC from an ACX7348 router chassis:

1. Place an antistatic bag or an antistatic mat on a flat, stable surface.

2. Wrap and fasten one end of the ESD grounding strap around your bare wrist, and connect the other end of the strap to an ESD point on the chassis. An ESD point is located on the front of the ACX7348 router (see Figure 75 on page 125).
3. Label the cables connected to each port on the FPC so that you can reconnect the cables to the correct ports.
4. Take the FPC offline by using the request-chassis-fpc slot *slot-number* offline command. Verify the status information by using the show chassis fpc command.
5. To unlatch the ejector handles, grasp both the ejector handles using your hands by placing your thumb on top of the ejector handle and your index finger below the ejector handle. Pull down the ejector handles simultaneously and slide the FPC out of the slot (see Figure 76 on page 126).

Figure 76: Removing an ACX7348 FPC

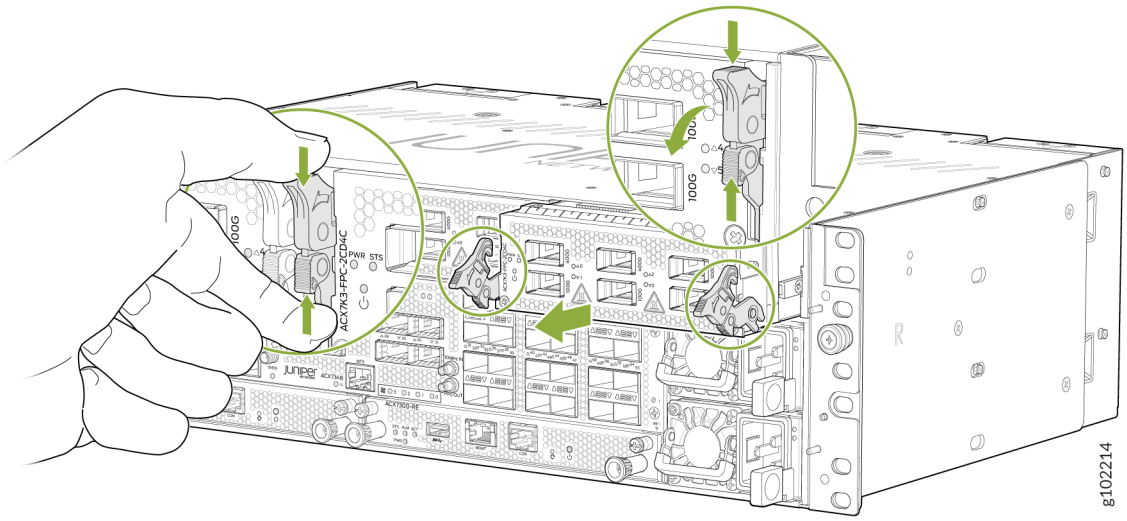

6. Place the FPC on the antistatic mat. Be careful not to bump or handle the FPC by the connectors. If you do not have an antistatic mat, have another person help you slide the antistatic bag over the FPC before placing it on a stable surface.

CAUTION: Do not stack hardware components on top of one another after you remove them. Place each component on an antistatic mat resting on a stable, flat surface.

Install a Flexible PIC Concentrator in the ACX7348 Router

To install an FPC in the ACX7348 router chassis:

1. Place an antistatic bag or an antistatic mat on a flat, stable surface.
2. Wrap and fasten one end of the ESD grounding strap around your bare wrist, and connect the other end of the strap to an ESD point on the chassis. An ESD point is located on the front of the ACX7348 router (see Figure 75 on page 125).
3. Either remove the failing FPC (see Figure 76 on page 126) or, if an FPC blank is installed, turn the thumb screws counter-clockwise on the handles on the blank and gently pull the blank out of the slot (see Figure 77 on page 127).

Figure 77: Removing the FPC Blank

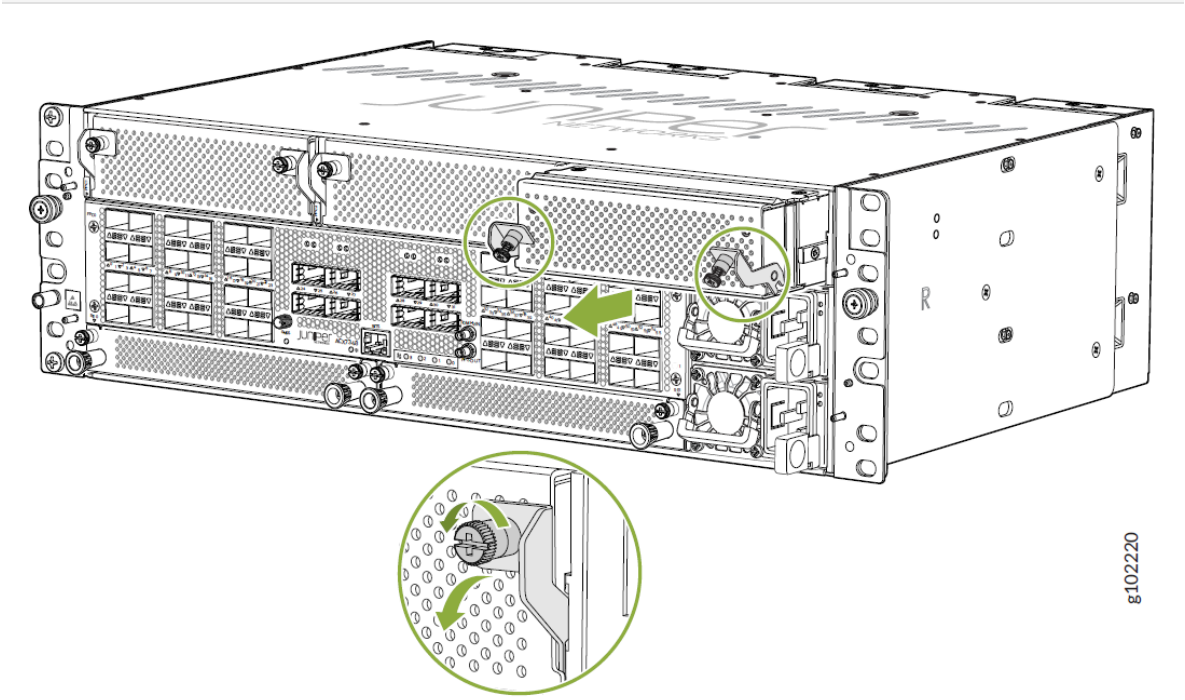

4. Remove the FPC from the antistatic bag, and inspect it for any damage before installing it in the chassis.
5. Lift the FPC by the handle with one hand, and support the lower edge with the other hand.
6. Gently slide the FPC into the open slot until the ejector handles engage and start to close.
7. Using both hands, push the lower end of both the ejector handles until they latch to seat the FPC (see Figure 78 on page 128).

Figure 78: Installing an ACX7348 FPC

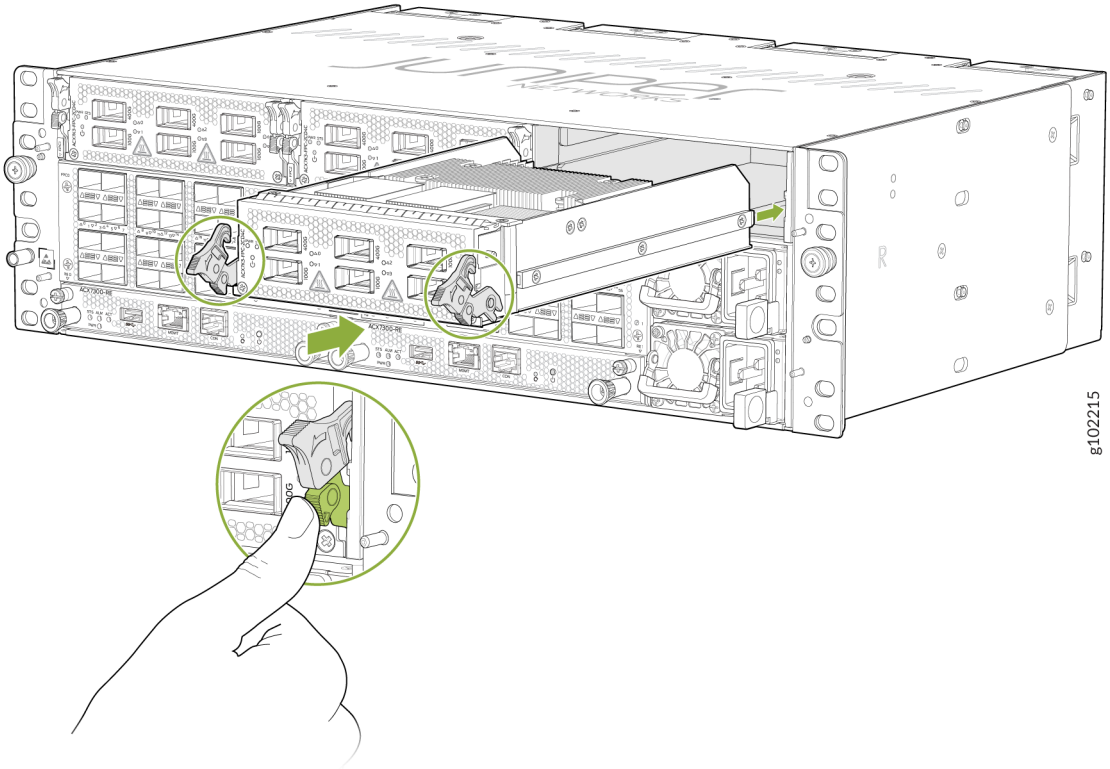

CHAPTER 6

Troubleshooting Hardware

Troubleshooting the ACX7348 Router | 130

Troubleshooting the ACX7348 Router

SUMMARY

Troubleshooting ACX7348 routers includes recognizing alarm types and alarm severity classes and resolving the error conditions that trigger alarms.

IN THIS SECTION

- Alarm Types and Severity Classes on ACX7348 Routers | **130**

Alarm Types and Severity Classes on ACX7348 Routers

IN THIS SECTION

- Alarm Types | **131**
- Alarm Severity Classes | **131**

Before monitoring the alarms on the router, become familiar with the terms defined in Table 35 on page 130 .

Table 35: Alarm Terms

Term	Definition
Alarm	Signal that alerts you to conditions that might prevent normal operation. On a router, the alarm signal is the ALM LED that is lit on the front of the chassis.
Alarm condition	Failure event that triggers an alarm.
Alarm severity	Seriousness of the alarm. The level of severity can be either major (steady red) or minor (steady amber).

Table 35: Alarm Terms *(Continued)*

Term	Definition
Chassis alarm	Predefined alarm that is triggered by a physical condition on the router, such as a power failure, excessive component temperature, or media failure.
System alarm	Predefined alarm that is triggered by a missing rescue configuration or failure to install a license for a licensed software feature.

Alarm Types

The router supports these alarms:

- Chassis alarms indicate a failure on the router or one of its components. Chassis alarms are preset and cannot be modified.
- System alarms indicate a missing rescue configuration. System alarms are preset and cannot be modified, although you can configure them to appear automatically in the J-Web interface display or CLI display.

Alarm Severity Classes

Alarms on ACX7348 routers have two severity classes:

- Major (steady red)—Indicates a critical situation on the router that has resulted from one of the following conditions. A major alarm condition requires immediate action.
  - One or more hardware components have failed.
  - If any fan has failed.
  - If any power supply module (PSM) is not connected or if a PSM has failed.
  - One or more hardware components have exceeded temperature thresholds.
  - An alarm condition that is configured on an interface has triggered a critical warning.
- Minor (steady amber)—Indicates a noncritical condition on the router that, if left unchecked, might cause an interruption in service or degradation in performance. A minor alarm condition requires monitoring or maintenance.

  A missing rescue configuration generates a minor system alarm.

CHAPTER 7

Contacting Customer Support and Returning the Chassis or Components

Returning an ACX7348 Chassis or Components | 133

Returning an ACX7348 Chassis or Components

SUMMARY

If you need to return a hardware component to Juniper Networks, you need a Return Material Authorization (RMA) number and the equipment serial number. The Juniper Networks Technical Assistance Center (JTAC) can generate an RMA number. You may also need to locate chassis or component details using the CLI or by referring to equipment labels. You then pack and ship the return.

IN THIS SECTION

- How to Return a Hardware Component to Juniper Networks, Inc. | **133**
- How to Locate the Serial Number on an ACX7348 Router or Component | **134**
- Contact Customer Support to Obtain Return Material Authorization | **139**
- Guidelines for Packing and Shipping Hardware Components | **140**

How to Return a Hardware Component to Juniper Networks, Inc.

If a hardware component fails, please contact Juniper Networks, Inc. to obtain a Return Material Authorization (RMA) number. This number is used to track the returned material at the factory and to return repaired or new components to you, as needed.

NOTE: Do not return any component to Juniper Networks, Inc. unless you have first obtained an RMA number. Juniper Networks, Inc. reserves the right to refuse shipments that do not have an RMA number. Refused shipments are returned to you by collect freight.

For more information about return and repair policies, see the customer support webpage at https://support.juniper.net/support/.

For product problems or technical support issues, contact the Juniper Networks Technical Assistance Center (JTAC) in one of the following ways:

- On the Web, using the Service Request Manager link at:

  https://support.juniper.net/support/

- By telephone:

- From the U.S. and Canada: 1-888-314-JTAC (5822)
- From all other locations: 1-408-745-9500

> **NOTE**: If contacting JTAC by telephone, enter your 12-digit service request number followed by the pound (#) key if this is an existing case, or press the star (*) key to be routed to the next available support engineer to report a new incident.

To return a defective hardware component:

1. Determine the part number and serial number of the defective component.
2. Obtain an RMA number from the JTAC. You can send e-mail or contact JTAC by telephone, as described above.
3. Provide the following information in your e-mail message or during the telephone call:
   - Part number and serial number of component
   - Your name, organization name, telephone number, and fax number
   - Description of the failure
4. The support representative validates your request and issues an RMA number for return of the component.
5. Pack the component for shipment. See "Guidelines for Packing and Shipping Hardware Components" on page 140 .

How to Locate the Serial Number on an ACX7348 Router or Component

IN THIS SECTION

- List the Chassis and Component Details Using the CLI | **135**
- Locate the Chassis Serial Number ID Label on an ACX7348 Router | **135**
- Locate the Serial Number ID Label on an ACX7348 Fan Tray | **136**
- Locate the Serial Number ID Label on an ACX7348 Power Supply Module | **136**
- Locate the Serial Number ID Label on an ACX7348 Routing Engine | **137**
- Locate the Serial Number ID Label on an ACX7348 Flexible PIC Concentrator | **138**

If you are returning a router or component to Juniper Networks for repair or replacement, you must locate the serial number of the router or component. You must provide the serial number to the Juniper Networks Technical Assistance Center (JTAC) when you contact them to obtain a Return Material Authorization (RMA) number. See No Link Title.

If the router is operational and you can access the CLI, you can list serial numbers for the router and for some components by using a CLI command. If you do not have access to the CLI, or if the serial number for the component does not appear in the command output, you can locate the serial number ID label on the router or component.

NOTE: If you want to find the serial number ID label on a component, you need to remove the component from the router chassis. To do this, you must have the required parts and tools available.

List the Chassis and Component Details Using the CLI

To list the components and serial numbers of ACX7348 routers, use the `show chassis hardware` CLI operational mode command.

Locate the Chassis Serial Number ID Label on an ACX7348 Router

On the ACX7348 router, the chassis serial number ID label is located on the top corner of the chassis, as shown in Figure 79 on page 135 .

Figure 79: ACX7348 Chassis Serial Number Label

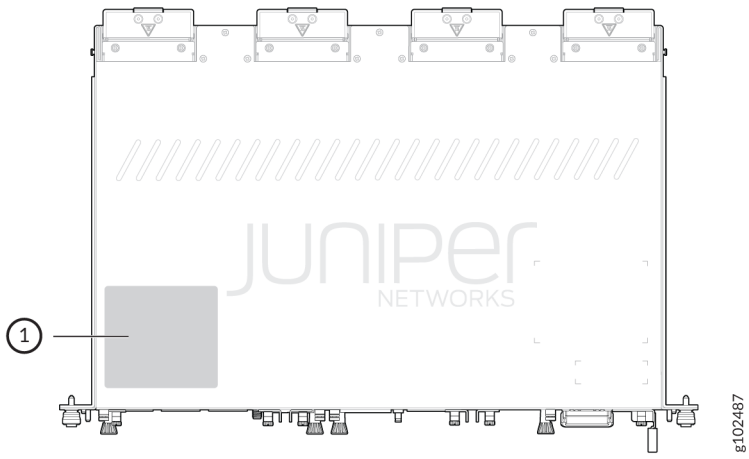

1– Serial Number ID Label

Locate the Serial Number ID Label on an ACX7348 Fan Tray

The fan tray installed in an ACX7348 router is a field-replaceable unit (FRU). For each FRU, you must remove the FRU from the router chassis to see the FRU serial number ID label.

The serial number ID label is on the side of the fan tray. See Figure 80 on page 136 .

Figure 80: ACX7348 Fan Tray Serial Number Label

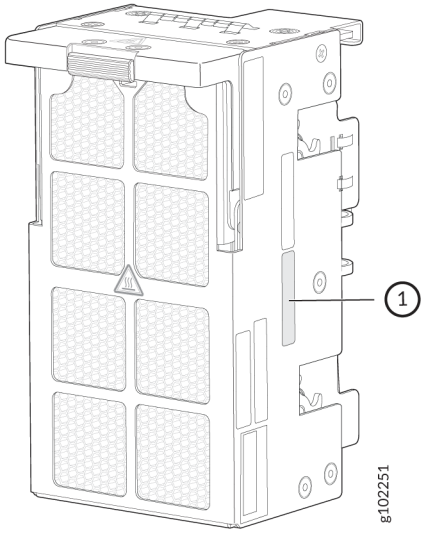

1– Serial Number ID Label	

Locate the Serial Number ID Label on an ACX7348 Power Supply Module

The power supply modules (PSMs) installed in an ACX7348 router are field-replaceable units (FRUs). For each FRU, you must remove the FRU from the router chassis to see the FRU serial number ID label.

- AC PSM—The serial number ID label is on the top of the AC PSM. See Figure 81 on page 137 .

Figure 81: ACX7348 AC PSM Serial Number Label

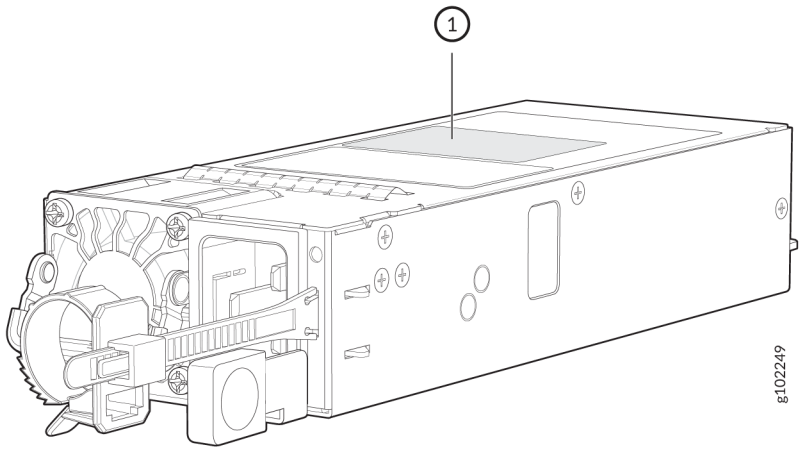

1–	Serial Number ID Label

- DC PSM—The serial number ID label is on the top of the DC PSM. See Figure 82 on page 137 .

Figure 82: ACX7348 DC PSM Serial Number Label

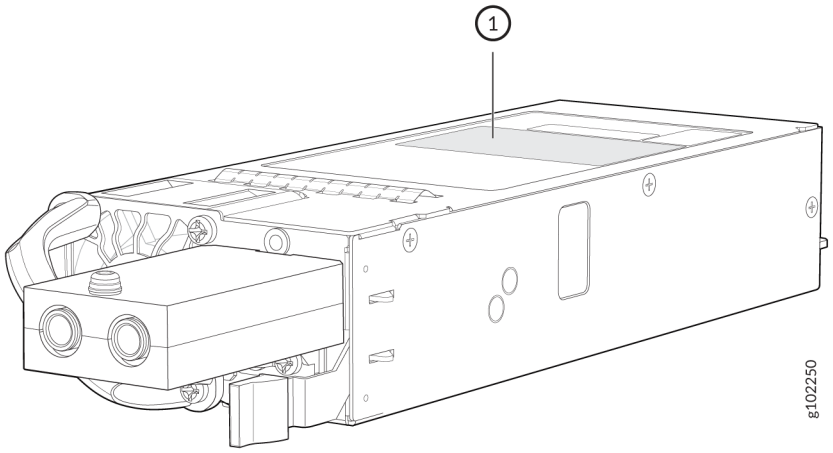

1–	Serial Number ID Label

Locate the Serial Number ID Label on an ACX7348 Routing Engine

The Routing and Control Boards (RCBs) installed in an ACX7348 router are field-replaceable units (FRUs). For each FRU, you must remove the FRU from the router chassis to see the FRU serial number ID label.

The serial number ID label is located on the bottom of the Routing Engine. See Figure 83 on page 138 .

Figure 83: ACX7348 Routing Engine

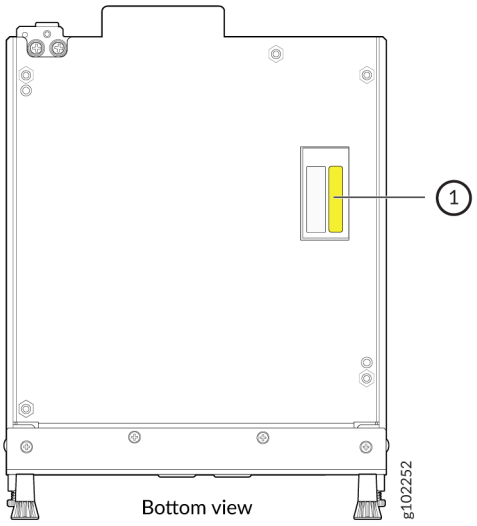

1– Serial Number ID Label

Locate the Serial Number ID Label on an ACX7348 Flexible PIC Concentrator

The Flexible PIC Concentrator (FPC) installed in an ACX7348 router is a field-replaceable unit (FRU). For each FRU, you must remove the FRU from the router chassis to see the FRU serial number ID label.

The serial number ID label is located on the top of the FPC. See Figure 84 on page 138 .

Figure 84: ACX7K3-FPC-2CD4C FPC Serial Number Label

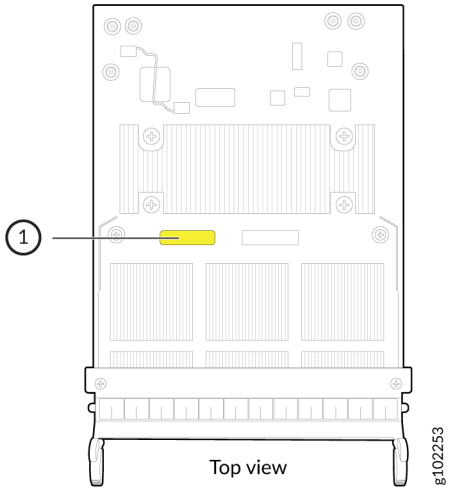

1– Serial Number ID Label	

Contact Customer Support to Obtain Return Material Authorization

If you are returning a device or hardware component to Juniper Networks for repair or replacement, obtain a Return Material Authorization (RMA) number from the Juniper Networks Technical Assistance Center (JTAC).

After locating the serial number of the device or component you want to return, open a service request with JTAC on the Web or by telephone.

Before you request an RMA from JTAC, be prepared to provide the following information:

- Your existing service request number, if you have one
- Serial number of the component
- Your name, organization name, telephone number, fax number, and shipping address
- Details of the failure or problem
- Type of activity being performed on the device when the problem occurred
- Configuration data displayed by one or more `show` commands

You can contact JTAC 24 hours a day, seven days a week on the Web or by telephone:

- Service Request Manager: https://support.juniper.net/support/
- Telephone: +1-888-314-JTAC (+1-888-314-5822), toll-free in the USA, Canada, and Mexico

> **NOTE**: For international or direct-dial options in countries without toll-free numbers, see https://support.juniper.net/support/.

If you are contacting JTAC by telephone, enter your 12-digit service request number followed by the pound (#) key for an existing case, or press the star (*) key to be routed to the next available support engineer for a new incident.

The support representative validates your request and issues an RMA number for return of the component.

Guidelines for Packing and Shipping Hardware Components

To pack and ship individual components:

1. When you return components, make sure that they are adequately protected with packing materials and packed so that the pieces are prevented from moving around inside the carton.
2. Use the original shipping materials, if they are available.
3. Place individual components in antistatic bags.
4. Write the RMA number on the exterior of the box to ensure proper tracking.
5. Ship the package.



CAUTION: Do not stack any of the hardware components.

CHAPTER 8

Safety and Compliance Information

Safety Information | 142

Compliance Statements for NEBS | 142

Compliance Statements for EMC Requirements | 142

Compliance Standards for ACX7348 Routers | 144

Safety Information

The Juniper Networks Safety Guide provides general safety information and guidelines for all Juniper Networks products. Follow the guidelines provided in the guide to reduce the likelihood of personal injury, equipment damage, and damage to surrounding areas.

Along with the information provided in the Juniper Networks Safety Guide, you must read and understand the ACX7348 specific safety information provided in this hardware guide.

Compliance Statements for NEBS

- The equipment is suitable for installation as part of the Common Bonding Network (CBN).
- The equipment is suitable for installation in locations where the National Electrical Code (NEC) applies.
- The battery return connection is to be treated as an isolated DC return (that is, DC-I), as defined in GR-1089-CORE.
- You must provision a readily accessible device outside of the equipment to disconnect power. The device must also be rated based on local electrical code practice.

Compliance Statements for EMC Requirements

IN THIS SECTION

- Canada | **143**
- European Community | **143**
- Israel | **143**
- Japan | **143**
- United States | **144**

Canada

CAN ICES-3 (A)/NMB-3(A)

European Community

This is a Class A product. In a domestic environment, this product might cause radio interference in which case the user might be required to take adequate measures.

Israel

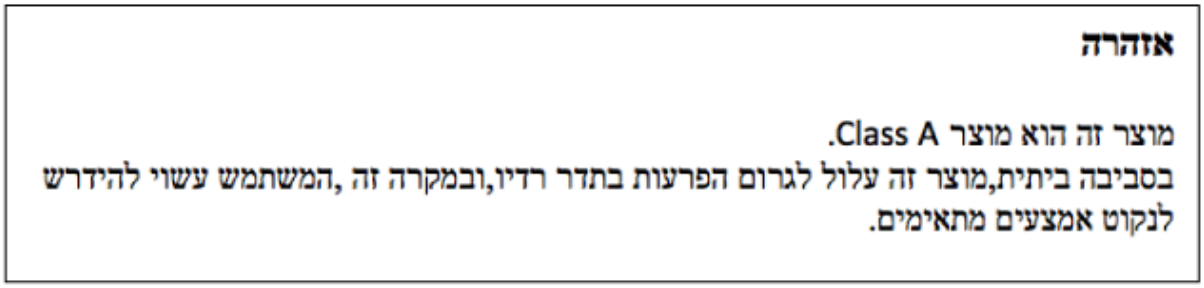

Translation from Hebrew—Warning: This product is Class A. In residential environments, the product might cause radio interference, and in such a situation, the user might be required to take adequate measures.

Japan

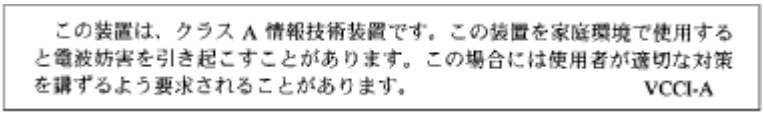

The preceding translates as follows:

This is a Class A product based on the standard of the Voluntary Control Council for Interference by Information Technology Equipment (VCCI). If this product is used near a radio or television receiver in a domestic environment, it might cause radio interference. Install and use the equipment according to the instruction manual. VCCI-A.

United States

The hardware equipment has been tested and found to comply with the limits for a Class A digital device, pursuant to Part 15 of the FCC Rules. These limits are designed to provide reasonable protection against harmful interference when the equipment is operated in a commercial environment. This equipment generates, uses, and can radiate radio frequency energy and, if not installed and used in accordance with the instruction manual, might cause harmful interference to radio communications. Operation of this equipment in a residential area is likely to cause harmful interference in which case the user will be required to correct the interference at his own expense.

Compliance Standards for ACX7348 Routers

The ACX7348 routers comply with the following standards:

- Safety
  - UL 60950-1:2007 R10.14 Information Technology Equipment
  - CAN/CSA-C22.2 No. 60950-1-07, Amd 1:2011, Amd 2:2014 Information Technology Equipment
  - IEC 62368-1:2014 (2nd Edition) Audio/Video, Information and Communication Technology Equipment (Include all country deviation)
  - IEC 62368-1:2018 (3rd Edition) Audio/Video, Information and Communication Technology Equipment (Include all country deviation)
  - EN 62368-1:2014+A11:2017 Audio/Video, Information and Communication Technology Equipment
  - UL/CSA 62368-1:2019 (3rd edition) Audio/Video, Information and Communication Technology Equipment
  - IEC/EN 60825-1 Safety of Laser Products – Part 1: Equipment classification and requirements
- Industry Standards
  - Railway EN 50125-3 humidity requirements (system in shelter/ building)
  - Railway EN 50125-3 Class T1 vibration (system in shelter/ building), 3 meter from Track
- EMC
  - FCC 47 CFR Part 15

- ICES-003 / ICES-GEN
- BS EN 55032
- BS EN 55035
- EN 300 386 V1.6.1
- EN 300 386 V2.2.1
- EN 301 489-1
- EN 301 489-19
- BS EN 300 386
- EN 55032
- CISPR 32
- EN 55035
- CISPR 35
- AS/NZS CISPR 32
- VCCI-CISPR 32
- BSMI CNS 15936
- KS C 9835 (Old KN 35)
- KS C 9832 (Old KN 32)
- KS C 9610
- BS EN 61000 Series
- IEC/EN 61000 Series
- IEC/EN 61000-3-2
- IEC/EN 61000-3-3
- Railroad Utilities: EN50121-4

- NEBS
  - GR-63 issue 5
  - GR-1089

    - GR-3108 Class 2 Edition 3
- Radio Frequency
    - EN 303 413
- ETSI
    - ETSI Operational EN 300 019 Class 3.2
    - ETSI Storage EN 300 019 2.1 Class 1.2
    - ETSI Transportation EN 300 019 Class 2.3