EPSON®

ES-C380W User's Guide

Contents

ES-C380W User's Guide **11**
Product Basics **12**
Product Features 12
Product Parts Locations 15
Product Parts - Front 16
Product Parts - Back 18
Product Parts - Inside 19
Optional Accessories and Replacement Parts 19
Scanner Position 20
Using the Control Panel 24
Control Panel Buttons and Lights 25
LCD Screen 26
Status Icon Information 26
Navigating the LCD Screen 27
Entering Characters on the LCD Screen 28
Viewing Animations 29
Registering Presets 30
Presets Menu Options 32
Adjusting the Screen Brightness 33
Adjusting Control Panel Sounds 33
Changing LCD Screen Language 33
Selecting the Date and Time 34
Changing the Keyboard Layout 34
Adjusting the Operation Time Out Setting 35
Preventing PC Connection via USB 35
Setting Direct Power On 35
Changing Regular Cleaning Alert Settings 36
Changing Roller Replacement Alert Settings 36
Setting a Password and Locking the Control Panel 37
Setting Up Epson Connect Services 38

Using Power Saving Settings ... 39
Changing the Sleep Timer Settings ... 39
Changing the Power Off Timer Settings ... 39
Available Software ... 40
Using the Epson Smart Panel Mobile App ... 41
Wi-Fi Networking ... 42
Network Security Recommendations ... 42
Connecting to an Existing Wi-Fi Network ... 43
Selecting Wireless Network Settings from the Control Panel ... 44
Wi-Fi Direct (Simple AP) Mode Setup ... 45
Connecting to a Mobile Device ... 46
Modifying the Wi-Fi Direct Network Name or Password ... 46
Setting Up Wireless Scanning from a Smart Device Using Epson Smart Panel ... 47
Wi-Fi Protected Setup (WPS) ... 49
Using WPS to Connect to a Network ... 49
Using WPS PIN Mode to Connect to a Network ... 50
Setting Up Network Scanning ... 50
Determining the Product's IP Address ... 53
Configuring Email Server Settings ... 53
Email Server Settings ... 54
Changing or Updating Network Connections ... 55
Changing a USB Connection to a Wi-Fi Connection ... 55
Connecting to a New Wi-Fi Router ... 55
Disabling Wi-Fi Features ... 56
Loading Originals ... 57
Scanner Positions ... 57
Loading Originals in the Input Tray ... 59
Loading Large Originals ... 73
Loading Long Paper ... 77
Loading Booklets ... 84
Loading Passports ... 89
Loading Multiple Sizes of Originals in the Input Tray ... 96
Original Document Specifications ... 102

Loading Plastic and Laminated Cards in the Input Tray 105
Plastic and Laminated Card Specifications 108
Loading Special Originals 109
Special Original Specifications 117
Scanning 120
Starting a Scan 120
Starting a Scan Using the Product Control Panel 120
Scanning to an External USB Device 122
Scanning to the Cloud 123
Scanning to Email 124
Scanning to a Connected Computer 126
Control Panel Scanning Options 127
Setting Up and Scanning to a Network Folder or FTP Server 129
Creating a Shared Network Folder 129
Registering Contacts for Email, Network, or FTP Scanning - Control Panel 132
Registering Contacts for Email, Network, or FTP Scanning - Web Config 133
Scanning to a Network Folder or FTP Server 135
Setting Up a WSD Port (Windows 7) 136
Scanning Using WSD - Windows 136
Scanning Using Presets 137
Scanning a Document in Epson ScanSmart 138
Saving a Scan 141
Attaching a Scan to Email 142
Sending a Scan to a Cloud Service 143
Printing a Scan 144
Saving a Scan as a Microsoft Office Format File 145
Selecting Epson ScanSmart Settings 146
Changing the Epson Product 146
Changing the Scan Settings 147
Software Settings Required for Special Originals 150
Changing the File Name Settings 151
Changing the Save Settings 152
Save Settings 154

Customizing Action Icons ... 156
Starting a Scan from a Scanning Program ... 157
Starting a Scan from a Smartphone or Tablet ... 160
Scan Resolution Guidelines ... 160
Using Mopria Scan ... 161
Scanning with AirPrint ... 162
Cleaning and Transporting Your Product ... 163
Cleaning Your Product ... 163
Cleaning Inside Your Product ... 163
Resetting the Number of Scans After Cleaning ... 174
Replacing the Rollers ... 176
Resetting the Roller Counter ... 186
Transporting Your Product ... 187
Administering Your Product ... 190
Accessing the Web Config Utility ... 190
Restricting Features Available for Users ... 191
Changing the Administrator Password in Web Config ... 191
Locking the Control Panel Using Web Config ... 192
Disabling the External Interface ... 192
Disabling Network Scanning ... 193
Disabling WSD Scan ... 193
Configuring Product Settings ... 194
Checking Status Information ... 194
Configuring Email Notification ... 195
Managing the Network Connection ... 196
Updating Firmware Using Web Config ... 196
Importing and Exporting Product Settings ... 197
Exporting Settings Using Web Config ... 197
Importing Settings Using Web Config ... 197
Using Your Product on a Secure Network ... 198
Configuring Protocols and Services in Web Config ... 198
Protocol Settings ... 199
Using a Digital Certificate ... 201

About Digital Certification ... 202
Obtaining and Importing a CA-signed Certificate ... 202
CSR Setup Settings ... 203
CSR Import Settings ... 204
Deleting a CA-signed Certificate ... 206
Updating a Self-signed Certificate ... 206
Importing a CA Certificate ... 207
Deleting a CA Certificate ... 207
Configuring SSL/TLS Communication ... 208
Configuring SSL/TLS Settings ... 208
Configuring a Server Certificate for the Product ... 208
Configuring IPsec/IP Filtering ... 209
About IPsec/IP Filtering ... 209
Configuring the Default IPsec/IP Filtering Policy ... 209
Configuring the Group IPsec/IP Filtering Policies ... 210
IPsec/IP Filtering Policy Settings ... 210
IPsec/IP Filtering Configuration Examples ... 215
Configuring an IPsec/IP Filtering Certificate ... 216
Connecting the Product to an IEEE 802.1X Network ... 217
Configuring an IEEE 802.1X Network ... 217
IEEE 802.1X Network Settings ... 217
Configuring a Certificate for an IEEE 802.1X Network ... 218
Using Epson Device Admin Configuration Software ... 219
Registering an Email Server ... 219
Email Server Settings ... 220
Enabling SMTP AUTH in Exchange Online ... 221
Setting Up OAuth 2.0 Authentication ... 222
Checking an Email Server Connection ... 223
Mail Server Connection Test Messages ... 223
Solving Problems ... 226
Product Status Messages ... 226
Solving Scanning Problems ... 228
Product Does Not Turn On or Turns Off Unexpectedly ... 228

Scanner Button Does Not Work as Expected ... 229
Scanning Software Does Not Operate Correctly ... 230
Cannot Start Epson Scan 2 ... 231
Paper Feeding Problems ... 232
Paper Jam Problems ... 234
Paper Protection Does Not Work Correctly ... 242
Scanning is Slow ... 242
Cannot Send Scans to a Cloud Service ... 243
Cannot Send Scans to an Email ... 243
Solving Network Scanning Problems ... 244
Cannot Scan Over a Network ... 245
Product Cannot Connect to a Wireless Router or Access Point ... 246
Cannot Access Web Config ... 247
Forgot the Administrator Password ... 248
Network Software Cannot Find Product on a Network ... 249
Cannot Save a Scan to a Shared Folder Over a Network ... 249
Cannot Access the Product After Configuring IEEE 802.1X ... 250
Solving Scanned Image Quality Problems ... 251
Back of Original Image Appears in Scanned Image ... 251
Image is Distorted or Blurry ... 251
Characters are not Recognized During Conversion to Editable Text (OCR) ... 252
Ripple Patterns Appear in an Image ... 253
Uneven Colors Appear in Scanned Image ... 253
Spots or Lines Appear in All Scanned Images ... 253
Scanned Image is Cropped ... 254
Cannot Solve Problems in the Scanned Image ... 254
Checking Your Applications ... 255
Checking Your Applications for Windows ... 255
Checking Your Applications for Mac OS ... 255
Updating Applications and Firmware ... 256
Resetting the Epson Scan 2 Settings ... 257
Uninstall Your Product Software ... 258
Uninstalling Product Software - Windows ... 258

Uninstalling Product Software - Mac ... 259
Where to Get Help (U.S. and Canada) ... 260
Where to Get Help (Latin America) ... 261
Technical Specifications ... 263
Windows System Requirements ... 263
Mac System Requirements ... 263
General Specifications ... 264
Dimension Specifications ... 265
Electrical Specifications ... 266
Environmental Specifications ... 267
Network Interface Specifications ... 267
Safety and Approvals Specifications ... 269
Notices ... 271
Important Safety Instructions ... 271
Wireless Connection Safety Instructions ... 274
Notes on the Administrator Password ... 274
Restrictions on Copying ... 275
Default Delay Times for Power Management for Epson Products ... 276
Binding Arbitration and Class Waiver ... 276
Trademarks ... 279
Copyright Notice ... 280
libTIFF Software Acknowledgment ... 280
A Note Concerning Responsible Use of Copyrighted Materials ... 281
Copyright Attribution ... 281

ES-C380W User's Guide

Welcome to the ES-C380W *User's Guide*.

For a printable PDF copy of this guide, click here.

Note: The illustrations in this guide are for reference only. Although they may differ slightly from the actual product, the operating methods are the same unless otherwise noted.

If you have not already done so, you can download the Epson ScanSmart software for use with your scanner. Visit epson.com/support (U.S.), epson.ca/support (Canada), or latin.epson.com/support (Latin America) and select your product. Then select the software on the **Downloads** tab.

Product Basics

See these sections to learn about the basic features of your product.

Product Features
Product Parts Locations
Scanner Position
Using the Control Panel
Using Power Saving Settings
Available Software
Using the Epson Smart Panel Mobile App

Product Features

Your product includes the following special features.

- **Scanning Passports and Booklets**

  You can scan originals such as passports or booklets using the straight path position.

  Note: Epson Smart Panel does not support booklet scanning.

  With the scanning software, you have the option of saving only the identification pages of your passport (Windows only). See the software help for more information.

- **Scanning Directly from the Control Panel**

  You can scan directly from the product's touch screen without having to use a computer. You can send the scanned image to a selected destination (such as a network folder, email, cloud service, or external USB drive) using the Scan to options. The option you use depends on the destination of the scanned image. See the links at the end of the topic for more information.

Destination of Scanned Image	Scan to Option
Save images to a connected computer 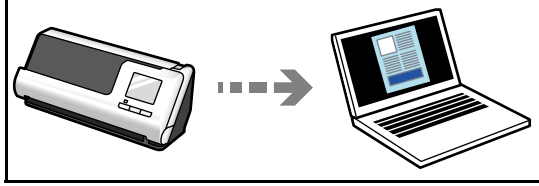	**Scan to Computer** Scan from the control panel using the Epson ScanSmart software installed on your computer.

Destination of Scanned Image	Scan to Option
Save images to an external USB drive connected to the scanner	**Scan to USB Drive** Send scanned images to a USB device connected to the product's external interface USB port.
Send images directly from the scanner to a cloud service 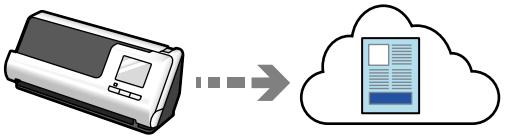	**Scan to Cloud** Send scanned images to cloud services such as Evernote, Google Drive, and Dropbox, as well as to email addresses using Epson Connect.
Email images directly from the scanner 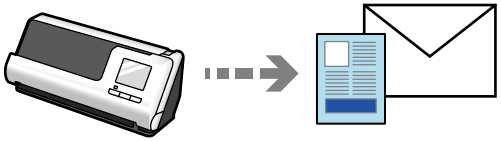	**Scan to Email** Send scanned images as email attachments either by setting up an email server or by using the Epson Connect cloud service.
Save images to a folder on the network 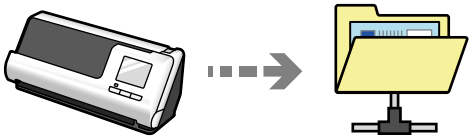	**Scan to Network Folder/FTP** You need to create a shared folder on the same network as the scanner in advance. As well as Network Folder (SMB), you can also set FTP/FTPS and WebDAV (HTTPS/HTTP) as the destination for scanned images.
Save images to a computer connected to the scanner	**Scan to WSD** Send scanned images to applications or computers that support Microsoft's Web Services for Devices (WSD). Depending on your environment, you may need to add a WSD scan device on your computer.

- **Glass Surface Stain Detection**

When the **Detect Glass Dirt** setting is enabled (**Epson Scan 2 Utility** > **Scanner Setting** tab > **Detect Glass Dirt**), the scanner detects any stains on the glass surface inside the scanner and displays a notification on the LCD or your computer screen. When this notification is displayed, clean the glass surface inside the scanner with a genuine Epson cleaning kit or a soft cloth.

Note: Some stains may not be accurately detected. If detection does not work correctly, try changing the settings. If no stains are detected, select **On-High**. If stains are detected incorrectly, select **On-Low** or **Off**.

- **Text Enhancement**

  You can use Text Enhancement settings (**Epson Scan 2** > **Advanced Settings** tab > **Text Enhancement** > **Settings**) to emphasize light letters and remove dotted patterns in the background of difficult to read originals. You can also correct scanned images when the corners or edges of the original are folded or torn, or when a shadow appears around the scanned image. The missing edges or corners will be automatically filled with the color of the original document.

  Note: When using Epson ScanSmart, you can open the Epson Scan 2 screen by clicking the **Settings** button > **Scanner Settings** tab > **Scan Settings**.

- **Document Protection**

  When the **Paper Protection** setting is enabled (**Epson Scan 2 Utility** > **Scanner Setting** tab > **Paper Protection**), scanning stops immediately when the following conditions are detected:

  - A paper feed error has occurred
  - An original is fed at an angle
  - The combination of the original and the scanner position does not match

  Note: Some feed errors may not be accurately detected. If detection does not work correctly, try changing the settings. If no errors are detected, select **On-High** to increase the sensitivity. If errors are detected incorrectly, select **On-Low** to decrease the sensitivity. Select **On-Medium** to detect stapled originals and skewed originals that the lower setting could not detect.

- **Double-feed Detection**

  Set the timing to stop operations when a double feed is detected (**Epson Scan 2 Utility** > **Scanner Setting** tab > **Double Feed Stop Timing**). Select **Immediate** to stop scanning immediately after any double feed is detected. Select **After Eject** to stop scanning the next document.

- **Scan from a mobile device with Epson Smart Panel**

You can use the Epson Smart Panel app to scan from your iOS or Android device over a direct Wi-Fi connection. You can save the scanned data to your device, upload it to a cloud service, or send it by email. You can also make Wi-Fi settings and troubleshoot errors directly from your smart device.

Parent topic: Product Basics

Related references

Scanner Position

Related tasks

Loading Passports
Loading Booklets
Scanning to a Connected Computer
Scanning to Email
Scanning to the Cloud
Scanning to an External USB Device
Scanning to a Network Folder or FTP Server
Scanning Using WSD - Windows
Configuring Email Server Settings
Creating a Shared Network Folder
Setting Up a WSD Port (Windows 7)
Starting a Scan Using the Product Control Panel

Product Parts Locations

See these sections to identify the parts on your product.

Product Parts - Front
Product Parts - Back
Product Parts - Inside
Optional Accessories and Replacement Parts

Parent topic: Product Basics

Product Parts - Front

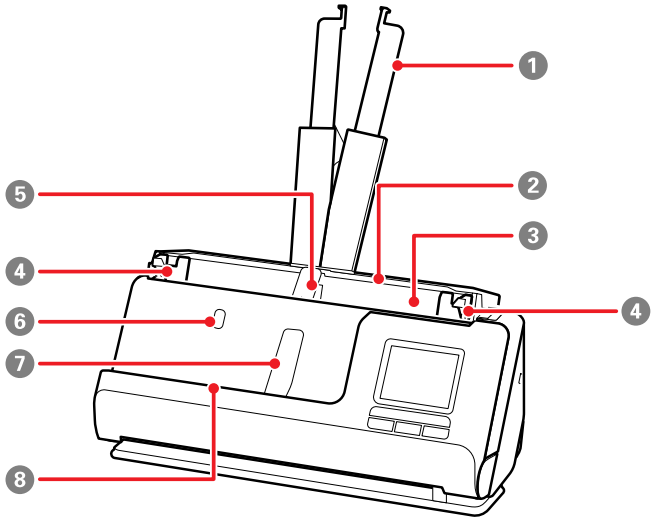

1 Input tray extension
2 Input tray
3 ADF (Automatic Document Feeder)
4 Edge guides
5 Input tray paper support
6 Input tray paper support button
7 Output tray paper support

8 Output tray paper support button

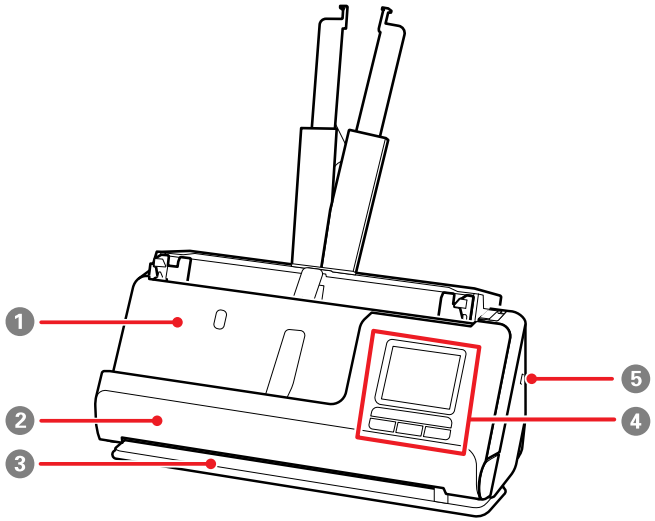

1 Output tray; originals scanned in the vertical path position are ejected here
2 Vertical path cover
3 Output slot; originals scanned in the straight path position are ejected here
4 Control panel
5 Security slot

Parent topic: Product Parts Locations

Product Parts - Back

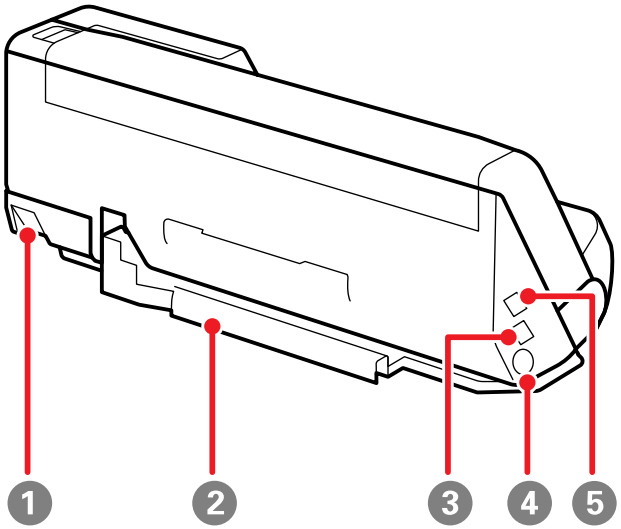

1 Scanner position selector

Use to change the scanner position between vertical path and straight path.

2 Cable holder (secures the cables neatly to the bottom of the scanner)

Caution: Do not secure the AC adapter cord and USB cable to the cable holder if the cables are twisted, bent, tangled or otherwise damaged.

3 USB-C port (for connecting to a computer)

4 DC inlet

5 External interface USB port

Parent topic: Product Parts Locations

Product Parts - Inside

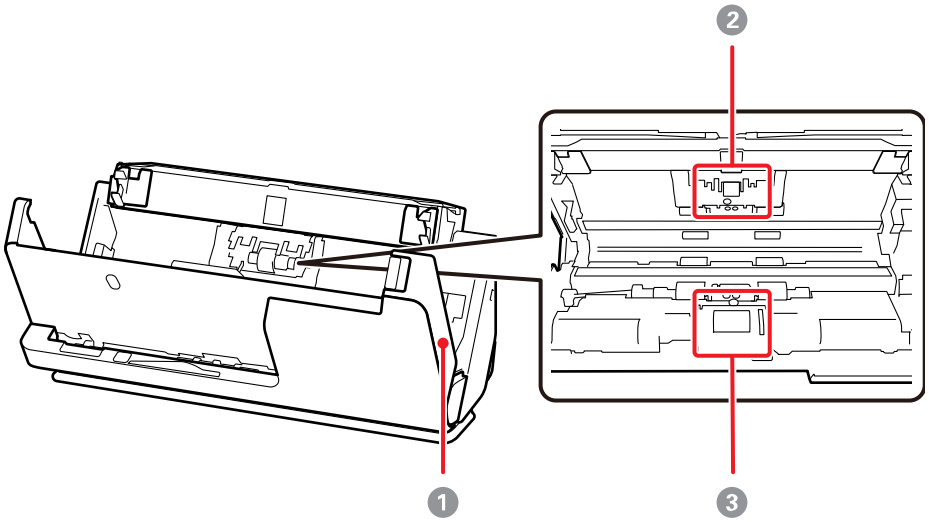

1 Scanner cover

2 Separation roller

3 Pickup roller

Parent topic: Product Parts Locations

Optional Accessories and Replacement Parts

U.S. and Canada: You can purchase optional accessories and replacement parts at epson.com (U.S. sales) or epson.ca (Canadian sales). You can also purchase accessories from an Epson authorized reseller. To find the nearest one, call 800-GO-EPSON (800-463-7766) in the U.S. or 800-807-7766 in Canada.

Latin America: You can purchase optional accessories and replacement parts from an Epson authorized reseller. To find the nearest reseller, go to latin.epson.com. Or you can contact your nearest sales office as described in "Where to Get Help".

Note: Availability of accessories varies by country.

Part	Part number
Carrier sheet (5)	B12B819051
Passport carrier sheet	B12B819651
Roller assembly kit	B12B819731
Cleaning kit	B12B819291

You can scan passports as is, but if you want to protect the passport while scanning, use a passport carrier sheet. Using a carrier sheet allows you to scan irregular shaped originals or originals that can easily be scratched. You can only load one carrier sheet in the straight path position.

Note: Use only the carrier sheets specified above. You can only use the carrier sheet or passport carrier sheet when scanning from a computer, or when scanning from the product's control panel using the **Computer** option. You cannot use a carrier sheet or passport carrier sheet when scanning from the product's control panel using the Network Folder, FTP, Email, Cloud, or USB Drive settings.

Parent topic: Product Parts Locations

Scanner Position

You can change the scanner position between vertical path position and straight path position depending on what types of originals you want to scan. See the link at the end of this section for more information on scanner positions used for various types of originals.

Caution: Be careful not to pinch your fingers or any cables when you change the position of the scanner, otherwise injury or damage may occur.

Vertical path position

When scanning multiple sheets of standard-size originals, or thin paper or receipts, pull the scanner position selector on the back of the product and tilt the scanner forward into the vertical path position.

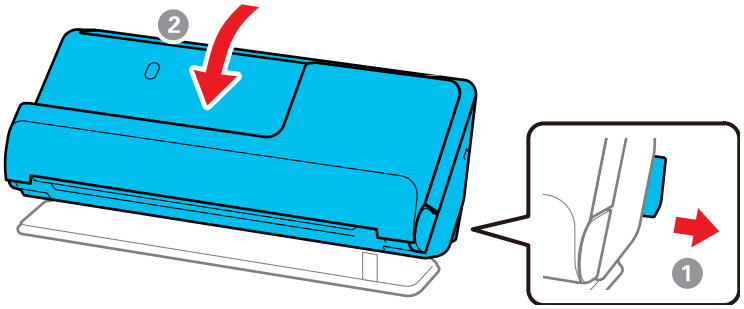

Note: When the scanner is changed to the vertical path position, the vertical path icon appears on the LCD screen.

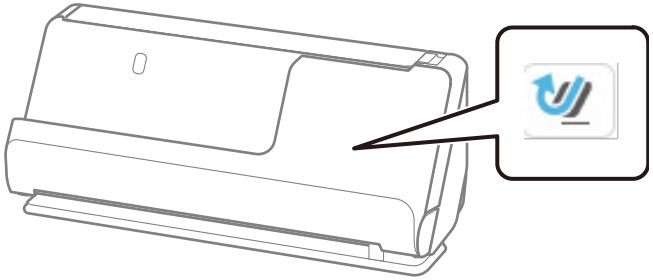

In the vertical path position, originals loaded in the input tray are ejected to the output tray at the top of the scanner.

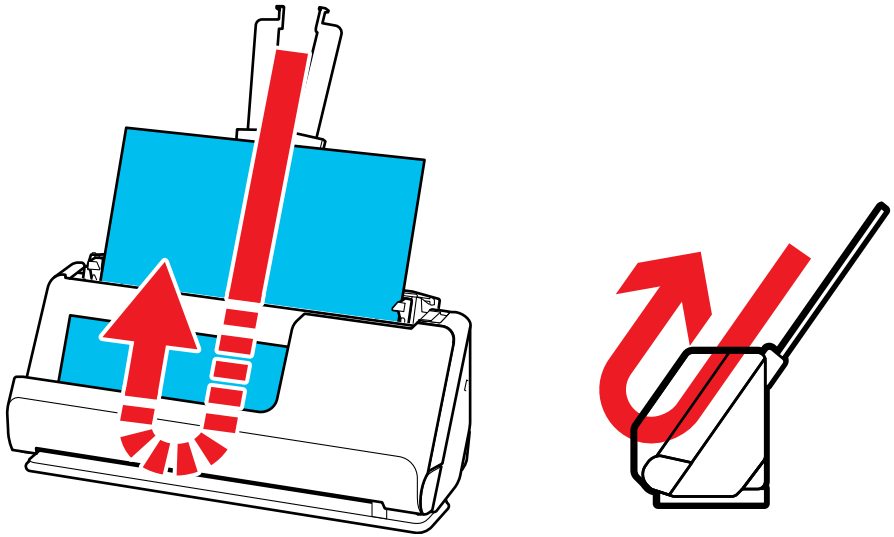

Straight path position

When scanning thick originals such as passports, pull the scanner position selector on the back of the product and tilt the scanner backward into the straight path position.

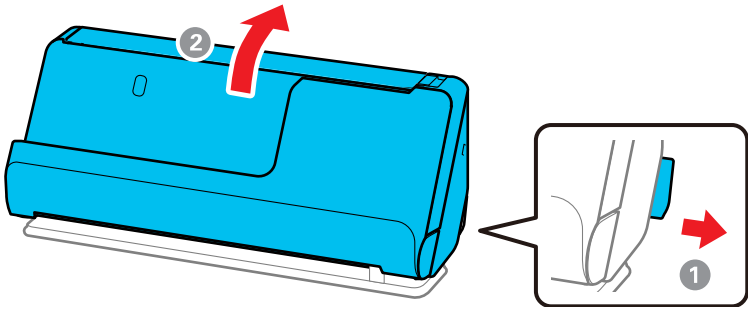

Note: When the scanner is changed to the straight path position, the straight path icon appears on the LCD screen.

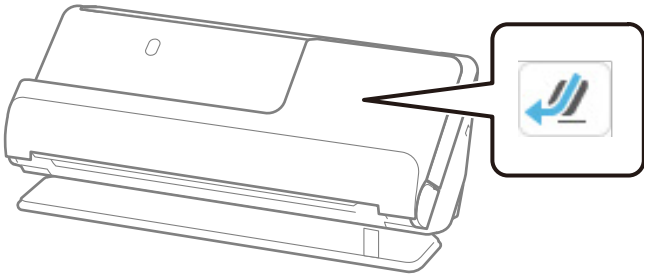

In the straight path position, originals loaded in the input tray are ejected to the output slot at the front of the scanner.

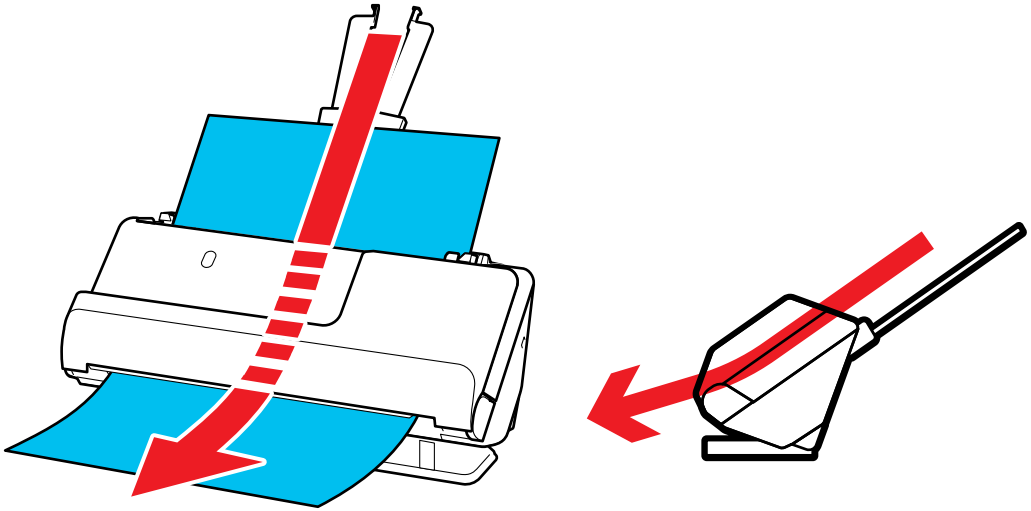

Parent topic: Product Basics

Related references

Scanner Positions

Using the Control Panel

See these sections to learn about the control panel and select control panel settings.

Control Panel Buttons and Lights
LCD Screen
Status Icon Information
Navigating the LCD Screen
Entering Characters on the LCD Screen
Viewing Animations
Registering Presets
Adjusting the Screen Brightness
Adjusting Control Panel Sounds
Changing LCD Screen Language
Selecting the Date and Time
Changing the Keyboard Layout
Adjusting the Operation Time Out Setting
Preventing PC Connection via USB
Setting Direct Power On
Changing Regular Cleaning Alert Settings
Changing Roller Replacement Alert Settings
Setting a Password and Locking the Control Panel
Setting Up Epson Connect Services

Parent topic: Product Basics

Control Panel Buttons and Lights

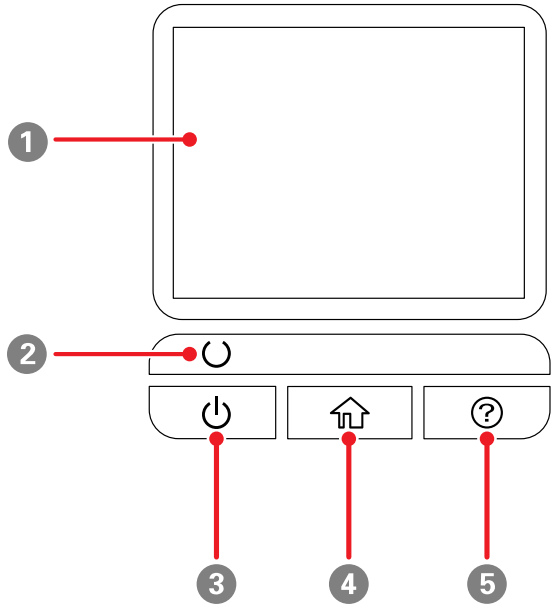

1 LCD screen

2 ready light; indicates the status of the product

3 power button; turns the product on and off

4 home button; displays the home screen

5 help button; displays the help screen

Parent topic: Using the Control Panel

LCD Screen

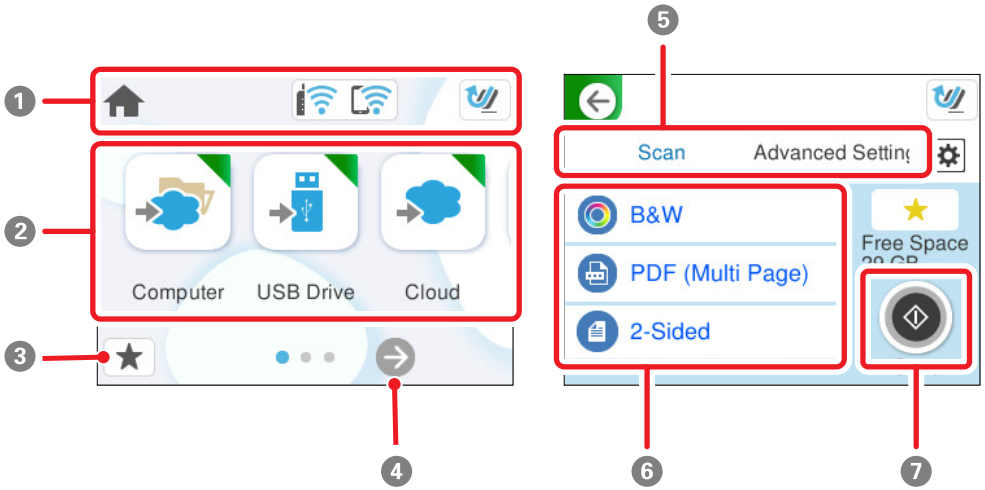

1 Displays status information; select an icon to check its status or adjust its settings
2 Menu options
3 Displays the presets list; load your presets and register new presets
4 Select to view additional menu options
5 Select a tab to view different options and settings
6 Setting options; select an item to change the settings (grayed-out items are not available)
7 Select to start scanning using current settings

Parent topic: Using the Control Panel

Status Icon Information

Your product displays status icons on the LCD screen for certain product status conditions.

Icons	Description
home	Displays the home screen.

Icons	Description
	Displayed when a firmware update is available.
	Displays the network connection status; select the icon to set up or change your network connection. • The product is not connected to a wireless network. • The product is searching for an SSID or experiencing a wireless network connection issue. • The product is connected to a wireless network; the number of bars indicates the connection's signal strength. • Wi-Fi Direct (Simple AP) is not enabled. • Wi-Fi Direct (Simple AP) is enabled.
	Displayed when the scanner is in the vertical path position.
	Displayed when the scanner is in the straight path position.
	Displays the previous screen.
	Displays additional information or instructions; select the icon to display the information.
	There is a problem with the indicated setting; select the icon for information on resolving the problem.

Parent topic: Using the Control Panel

Related references

Product Status Messages

Related tasks

Setting a Password and Locking the Control Panel

Navigating the LCD Screen

Follow these guidelines to navigate and use the menus on the LCD screen.

Tap or press the screen to select an item or icon

Flick the screen to scroll swiftly

Slide your finger across the screen to move items

To change a setting, tap anywhere on the setting.

To enter a value in a field, tap the field to display the on-screen keyboard.

Parent topic: Using the Control Panel

Entering Characters on the LCD Screen

Follow these guidelines to enter characters for passwords and other settings.

On-screen keyboard

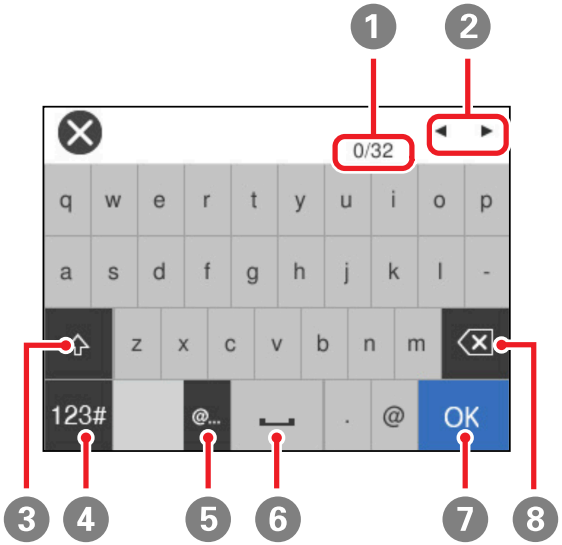

1 Displays the character count

2 Moves the cursor left or right

3 Switches between uppercase and lowercase characters

4 Switches between characters and numbers or symbols

5 Displays a list of common domain names to choose from

6 Enters a space

7 Select when you are finished

8 Deletes the previous character

Parent topic: Using the Control Panel

Viewing Animations

You can view animations on the LCD screen to help guide you with a procedure or to troubleshoot a problem.

1. Press the help button on the control panel to display the help screen.
2. Select **How To** to view instructions on common procedures.
3. Select a topic from the list of available topics and follow the on-screen instructions.

   While viewing the topics, you may see screens like this:

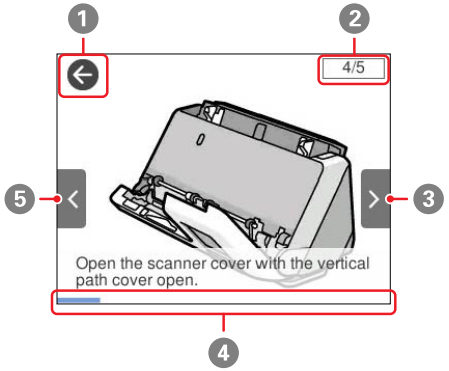

1 Returns to the start of the animation

2 Displays the current step number and the total number of steps

3 Select the right arrow to view the next step

4 Indicates your overall progress through the animation

5 Select the left arrow to view the previous step

Parent topic: Using the Control Panel

Registering Presets

You can register up to 24 frequently used scanning settings as presets.

Note: This setting can be locked by an administrator. If you cannot access or change this setting, contact your administrator for assistance. To register presets using Web Config, select **Presets** on the Scan tab and follow the instructions on the screen. You can register the current scan settings by selecting the ★ presets icon on the start scanning screen.

1. Select the home icon, if necessary.
2. Select the ★ Presets icon on the home screen.

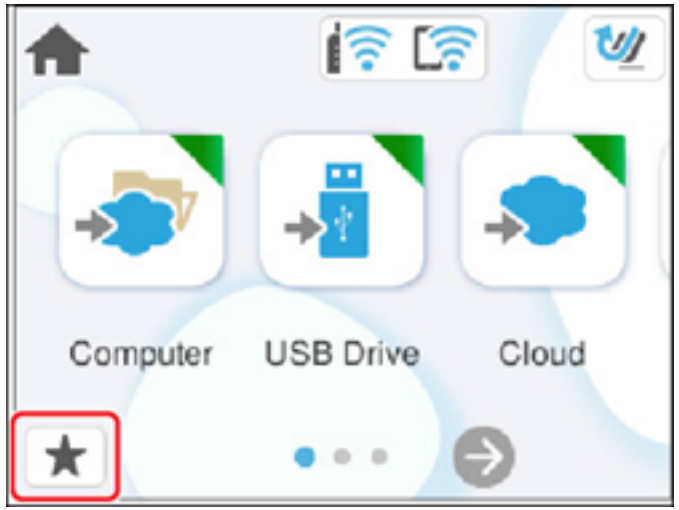

3. Select a icon.

4. Select the scanning option you want to register as a preset.

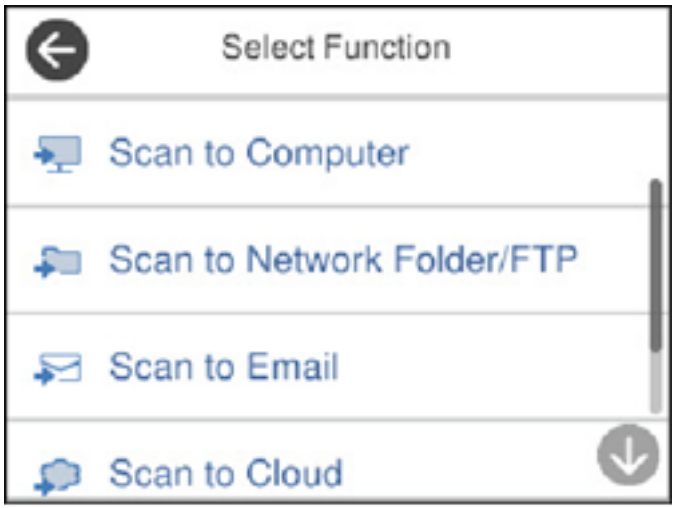

Note: For some scanning options, it is best to configure the destination information (such as email contacts or network folders) before registering the preset. You can still configure the destination information while registering the preset, but if it is configured beforehand, you can simply make your selections from the existing list.

5. Tap the ☆ Register icon to register the preset.

   Note: The **Scan to Computer** option is available only for a computer connected over a network.

6. Enter the following settings:
   - **Name**: Enter a name for the preset.
   - **Set Icon**: Select an icon and background color for the preset.
   - **Quick Send Setting**: Select **On** to start scanning immediately when the preset is selected.
   - **Contents**: Change scan settings as necessary.
7. Select **OK** to save the preset settings.

Presets Menu Options

Parent topic: Using the Control Panel

Related tasks

Scanning Using Presets

Presets Menu Options

Select the arrow next to each preset to change the registered contents of the preset, or to display the scan settings.

Change Name
Changes the preset name.

Change Icon
Changes the icon image and color of the preset.

Quick Send Setting
Immediately starts scanning without confirmation when the preset is selected.

Change Position
Changes the display order of the presets.

Delete
Deletes the preset.

Confirm Details
Displays the preset scan settings. You can load the preset by selecting **Use This Setting**.

Parent topic: Registering Presets

Adjusting the Screen Brightness

You can adjust the brightness of the LCD screen.

1. Select the home icon, if necessary.
2. Select **Settings** > **Basic Settings**.
3. Select **LCD Brightness**.
4. Select the **–** or **+** icon to decrease or increase the brightness.
5. Select **OK** to exit.

Parent topic: Using the Control Panel

Adjusting Control Panel Sounds

You can adjust the sound level heard when you press buttons on the control panel.

1. Select the home icon, if necessary.
2. Select **Settings** > **Basic Settings**.
3. Select **Sounds**.
4. Do one of the following:
   - To mute all control panel sounds, turn the **Button Press** setting off.
   - To adjust the sound level for scanner errors, select **Error Tone** and tap the icons to select the desired level.
5. Select **OK** to exit.

Parent topic: Using the Control Panel

Changing LCD Screen Language

You can change the language used on the LCD screen.

1. Select the home icon, if necessary.
2. Select **Settings** > **Basic Settings**.
3. Scroll down and select **Language**.

4. Select a language.

Parent topic: Using the Control Panel

Selecting the Date and Time

Select the current date, time, and daylight saving phase in your area, and choose your preferred date and time format.

1. Select the home icon, if necessary.
2. Select **Settings** > **Basic Settings**.
3. Select **Date/Time Settings**.
4. Select **Daylight Saving Time**.
5. Select the setting that applies to your area.
   - **Off**: it is winter or your region does not use Daylight Saving Time (DST)
   - **Summer**: it is spring or summer and your region uses Daylight Saving Time (DST)

   Note: If your region uses Daylight Saving Time (DST), you must change this setting to match the season. When you change from **Off** to **Summer**, your product automatically sets its clock ahead one hour. When you change from **Summer** to **Off**, it sets its clock back one hour.

6. Select **Date/Time**.
7. Select the date format you want to use.
8. Use the numeric keypad to enter the current date, then select **OK**.
9. Select the time format you want to use.
10. Use the numeric keypad to enter the current time, then select **OK**.
11. Select **Time Difference**.
12. Use the **+** and **-** buttons to enter the time difference between your time zone and UTC (Coordinated Universal Time), then select **OK**.

Parent topic: Using the Control Panel

Changing the Keyboard Layout

You can change the layout of the keyboard on the control panel.

1. Select the home icon, if necessary.

2. Select **Settings** > **Basic Settings**.
3. Select **Keyboard**.
4. Select the layout you want to use.

Parent topic: Using the Control Panel

Adjusting the Operation Time Out Setting

The Operation Time Out setting causes the LCD screen to return to the home screen after a few minutes of inactivity. This feature is enabled by default, but you can turn it off.

1. Select the home icon, if necessary.
2. Select **Settings** > **Basic Settings**.
3. Scroll down and select **Operation Time Out**.
4. Tap the setting to toggle it **On** or **Off** (**On** is the default).
5. If you want to increase or decrease the number of minutes, tap the **+** and **–** icons to set the desired number.
6. Select **OK** to exit.

Parent topic: Using the Control Panel

Preventing PC Connection via USB

You can disable access to your product from a USB-connected computer. This restricts non-network access to the product.

1. Select the home icon, if necessary.
2. Select **Settings** > **Basic Settings**.
3. Scroll down and select **PC Connection via USB**.
4. Select **Disable**.
5. Select **Yes** to restart the product.

Parent topic: Using the Control Panel

Setting Direct Power On

You can turn on the product directly when the product is connected to the power source, without pressing the power button.

Note: This setting can be locked by an administrator. If you cannot access or change this setting, contact your administrator for assistance.

1. Select the home icon, if necessary.
2. Select **Settings** > **Basic Settings**.
3. Scroll down and select **Direct Power On**.
4. Select **On**.

Parent topic: Using the Control Panel

Changing Regular Cleaning Alert Settings

You can set an alert to appear to remind you to perform regular cleaning after a certain number of scans.

Note: This setting can be locked by an administrator. If you cannot access or change this setting, contact your administrator for assistance.

1. Select the home icon, if necessary.
2. Select **Settings** > **Regular Cleaning Alert Settings**.
3. Do the following:
   - Set the **Warning Alert Setting** to **On** to receive a notification when it is time to clean inside the scanner.
   - On the **Count Alert Setting** screen, use the **+** and **–** icons to change the number of scans before the notification appears.
4. Select **OK** to exit.

Parent topic: Using the Control Panel

Changing Roller Replacement Alert Settings

You can set an alert to appear to remind you to replace the roller after a certain number of scans.

Note: This setting can be locked by an administrator. If you cannot access or change this setting, contact your administrator for assistance.

1. Select the home icon, if necessary.
2. Select **Settings** > **Roller Replacement Alert Setting**.

3. Select **Count Alert Setting**.
4. Use the **+** and **–** icons to change the number of scans (1,000 to 200,000) before the notification appears.
5. Select **OK** to exit.

Parent topic: Using the Control Panel

Setting a Password and Locking the Control Panel

You can set an administrator password to lock the following settings and prevent them from being changed:

Note: You should set an administrator password and keep it in a safe place. You must know the administrator password in order to change it. If you forget the password or inadvertently set it, contact Epson for assistance.

- Start-up Screen
- Basic Settings
- Scanner Settings
- User Settings
- Network Settings
- Web Service Settings
- Contacts Manager
- System Administration
- Reset the Number of Scans
- Roller Replacement Alert Setting
- Regular Cleaning Alert Settings

You can change the password using the product control panel.

Note: To change the password using Web Config, select **Change Administrator Password** on the Product Security tab and enter the necessary information.

1. Select the home icon, if necessary.
2. Select **Settings**.

3. Select **System Administration**.
4. Select **Admin Settings**.
5. Select **Admin Password** > **Change**.
6. Enter your current password.

   Note: The default password is the product's serial number. To locate the serial number, check the label attached to the back of your product. If you restore the product to default settings, the administrator password resets to the product serial number.

7. Enter a new password.
8. Enter the new password again to confirm it.

   Note: Keep a copy of your password in a safe place.

9. Select **Lock Setting** > **On** to enable access restriction.

   Note: To set the lock setting using Web Config, select **Control Panel** on the Device Management tab and select **Panel Lock** > **On**.

When the control panel is locked, you must enter the password to access any of the locked settings. You can reset the administrator password by selecting **Reset** on the Admin Password screen. To disable access restriction, select **Settings** > **System Administration** > **Admin Settings** > **Lock Setting** > **Off**.

Parent topic: Using the Control Panel

Setting Up Epson Connect Services

If you did not activate your product's email address for use with Epson Connect when you set up your product, you can activate it using the product control panel.

1. Select the home icon, if necessary.
2. Select **Settings**.
3. Select **Web Service Settings**.
4. Select **Epson Connect Services**.
5. Select **Register**.
6. Follow the instructions on the screen to activate your product's email address.

Parent topic: Using the Control Panel

Using Power Saving Settings

Your product enters sleep mode automatically and turns off the LCD screen if it is not used for a period of time. You can make the time period shorter to save energy and resources.

Changing the Sleep Timer Settings
Changing the Power Off Timer Settings

Parent topic: Product Basics

Changing the Sleep Timer Settings

You can adjust the time period before your product enters sleep mode and turns off the LCD screen.

1. Select the home icon, if necessary.
2. Select **Settings** > **Basic Settings**.
3. Select **Sleep Timer**.
4. Select the **+** and **–** icons to increase or decrease the number of minutes.

   Note: You can also press the minutes field and use the displayed numeric keypad to enter the number of minutes.

5. Select **OK** to exit.

Parent topic: Using Power Saving Settings

Changing the Power Off Timer Settings

You can have the product turn off automatically if it is not used for a specified period of time.

1. Select the home icon, if necessary.
2. Select **Settings** > **Basic Settings**.
3. Select **Power Off Timer**.
4. Select a time period between **30minutes** and **12h** (12 hours).

Parent topic: Using Power Saving Settings

Available Software

The table below provides an overview of the software available for your product.

You can download and install the necessary software from the Epson website using the instructions on the *Start Here* sheet.

Note: An Internet connection is required to obtain the product software.

Software	Description
Epson ScanSmart	Allows you to easily and efficiently digitize originals if you want to save scanned data to your computer. See the software help for detailed information on using the application.
Epson Scan 2	Scanner driver that allows you to control the scanner (accessible through the Epson ScanSmart settings). You can adjust the size, resolution, brightness, contrast, and quality of the scanned image. See the software help for more information on using the application. **Note:** For Windows Server operating systems, make sure the Desktop Experience feature is installed.
Epson Smart Panel	An app that allows you to scan documents using devices such as iOS or Android smart phones and tablets. You can save the scanned data in smart devices or cloud services, and send by e-mail. Download and install Epson Smart Panel from the App Store or Google Play.
Epson Software Updater	Periodically checks for software updates and then notifies you and installs the software if an update is available. You can select the interval for update checks and make settings for receiving update notifications. In addition to driver updates, also allows you to update product firmware and previously installed applications, and install additional software that is compatible with your product. **Note:** Windows Server operating systems are not supported.
Web Config	Pre-installed software that allows you to access your scanner from a web browser via a network, and perform administrative functions such as updating firmware and configuring network and advanced security settings. To use Web Config, connect the scanner and the computer or smart device to the same network.

Software	Description
EpsonNet Config	Allows you to set network interface addresses and protocols. See the software help for more information on using the application.
Epson Device Admin	Allows you to monitor and manage your product on a network and perform administrative functions such as updating firmware and running detailed status reports. See the software help for more information on using the application.
Presto! BizCard	Allows you to easily save and manage your contact information and provides a full range of contact management functions for adding business cards without having to type. You can also use the BizCard recognition system to scan business cards, edit, and synchronize the information to the most frequently used personal database management software. See the software help for more information on using the software and its functions.

Parent topic: Product Basics

Using the Epson Smart Panel Mobile App

Use this free Apple and Android app to scan with networked Epson products.

Note: Epson Smart Panel can scan standard-size originals, plastic cards, and a passport. It cannot scan other originals.

1. Connect your product to your wireless network. See the link below.
2. Visit epson.com/connect (U.S.), epson.ca/connect (Canada), or latin.epson.com/connect (Latin America) to learn more about Epson Smart Panel and check the compatibility of your mobile device.
3. Download Epson Smart Panel from the Apple App Store or Google Play.
4. Connect your mobile device to the same wireless network as your product.
5. Open Epson Smart Panel and select your Epson product, if necessary.

Now you are ready to scan with your mobile device and your Epson product.

Parent topic: Product Basics

Related tasks

Setting Up Network Scanning

Wi-Fi Networking

See these sections to use your scanner over a Wi-Fi network.

Network Security Recommendations
Connecting to an Existing Wi-Fi Network
Wi-Fi Direct (Simple AP) Mode Setup
Wi-Fi Protected Setup (WPS)
Setting Up Network Scanning
Configuring Email Server Settings
Changing or Updating Network Connections
Disabling Wi-Fi Features

Network Security Recommendations

To help deter unauthorized access to your product over a network, you should protect your network environment using appropriate security measures.

Security measures such as these can help deter threats such as loss of user data, use of telephone and fax lines, and other intrusions:

- **Enable security on your wireless LAN**

  Enable the appropriate security on the wireless LAN you plan to use with your product. Network security such as a network password can deter interception of traffic over the wireless LAN. Your router may already have a default password enabled by your Internet service provider (ISP). See your ISP and router documentation for instructions on how to change the default password and better secure your network.

- **Connect your product only to a network protected by a firewall**

  Connecting your product directly to the Internet may leave it vulnerable to security threats. Instead, connect it to a router or other network connection protected by a firewall. Your router may already have a firewall set up by your Internet service provider; check with your ISP for confirmation. For best results, set up and use a private IP address for your network connection.

- **Change the default administrator password on your product**

  If your product has an option to set an administrator password, change the default administrator password to deter access by unauthorized users to personal data stored on your product, such as IDs, passwords, and contact lists.

Parent topic: Wi-Fi Networking

Connecting to an Existing Wi-Fi Network

You can set up your product to communicate with your computer using a wireless router. The wireless router can be connected to your computer over a wireless or wired network.

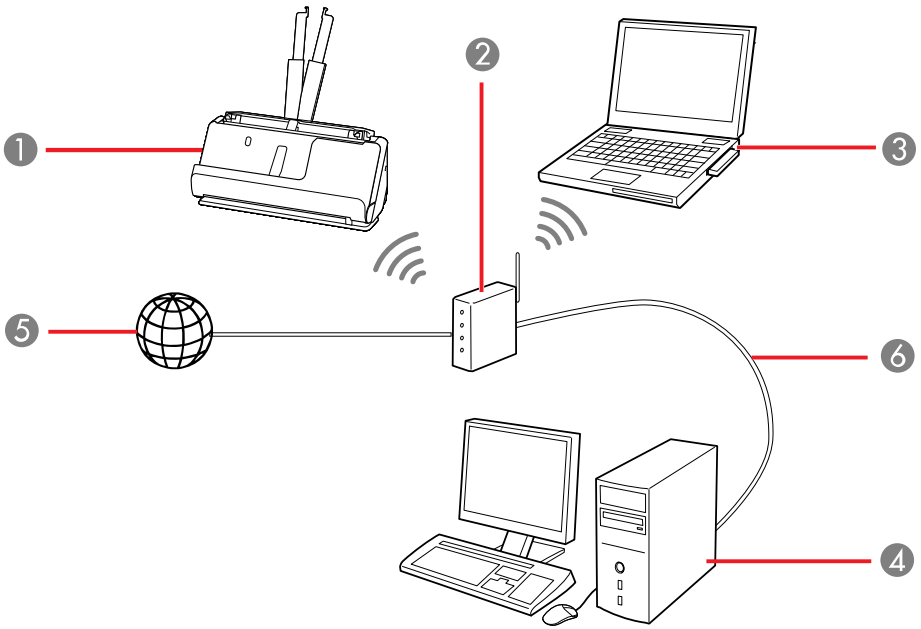

1 Epson product

2 Wireless router or access point

3 Computer with a wireless interface

4 Computer

5 Internet

6 Ethernet cable (used only for wired connection to the wireless router or access point)

Selecting Wireless Network Settings from the Control Panel

Parent topic: Wi-Fi Networking

Selecting Wireless Network Settings from the Control Panel

You can select or change wireless network settings using your product control panel.

To install your product on a wireless network, install the necessary software by downloading it from the Epson website. The installer program guides you through network setup.

1. Select the home icon, if necessary.
2. Press the icon.
3. Select **Wi-Fi (Recommended)**.
4. Select **Start Setup** or **Change Settings**.
5. Select **Wi-Fi Setup Wizard**.
6. Select the name of your wireless network or select **Enter Manually** to enter the name manually. Use the displayed keypad to enter your network name.
7. Select the **Password** field and enter your wireless password using the displayed keypad.

   Note: The network name and password are case sensitive. Be sure to correctly enter uppercase and lowercase letters, and numeric or special characters.

8. Select **OK** when you finish entering your password.
9. Confirm the displayed network settings and select **Start Setup** to save them.
10. Select the home icon to return to the home screen.

    You see the icon on the LCD screen and should be able to connect to your product directly from your computer or device, and then scan. If you are scanning from a computer, make sure you installed the network software.

Note: If you don't see the icon, you may have selected the wrong network name or entered the password incorrectly. Repeat these steps to try again.

Parent topic: Connecting to an Existing Wi-Fi Network

Related tasks

Setting Up Network Scanning

Related topics

Using the Control Panel

Wi-Fi Direct (Simple AP) Mode Setup

You can set up your product to communicate directly with your computer or another device without requiring a wireless router or access point. In Wi-Fi Direct (Simple AP) Mode, the product itself acts as a network access point for up to 8 devices.

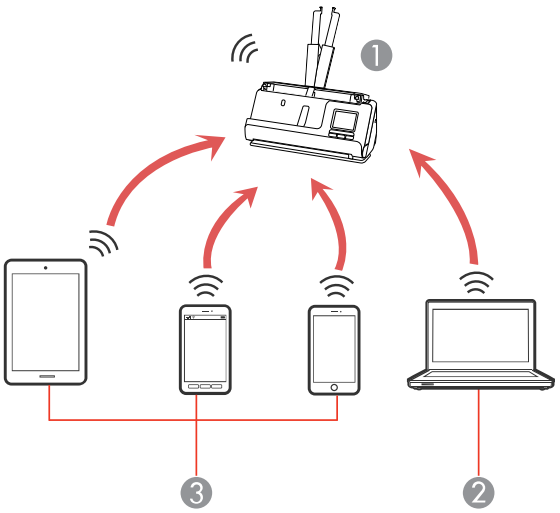

1 Epson product

2 Computer with a wireless interface

3 Other wireless devices

Note: Devices directly connected to the product cannot communicate with each other through the product.

Connecting to a Mobile Device
Modifying the Wi-Fi Direct Network Name or Password
Setting Up Wireless Scanning from a Smart Device Using Epson Smart Panel

Parent topic: Wi-Fi Networking

Related tasks

Selecting Wireless Network Settings from the Control Panel

Connecting to a Mobile Device

You can connect a mobile device directly to the product without a wireless router or access point.

Note: Make sure the Epson Smart Panel app is installed on your mobile device before connecting to the product.

1. Select the home icon, if necessary.
2. Press the icon.
3. Select **Wi-Fi Direct**.
4. Select **Start Setup**.
5. Select your product in the Epson Smart Panel app to complete Wi-Fi Direct setup.
6. Select **Complete**.

Parent topic: Wi-Fi Direct (Simple AP) Mode Setup

Modifying the Wi-Fi Direct Network Name or Password

You can modify the Wi-Fi Direct name and password to create a more descriptive and secure Wi-Fi Direct network.

1. Select the home icon, if necessary.
2. Press the icon.
3. Select **Wi-Fi Direct**.
4. Select **Start Setup**.

5. Select the menu icon.
6. Select one of the following:
   - To change the Wi-Fi Direct network name (SSID), select **Change Network Name** and select **Yes**. Select **Change**, then use the on-screen keyboard to enter the new network name.

     Note: Your network name must be no more than 22 characters long.

   - To change the Wi-Fi Direct password, select **Change Password** and select **Yes**. Use the on-screen keyboard to enter your new Wi-Fi Direct password.

     Note: Your password must be at least 8 and no more than 22 characters long.

   Note: If you have already connected devices or computers to your product via Wi-Fi Direct, they will be disconnected when you change the network name or password.

7. When entering your Wi-Fi Direct network name or password, do the following:
   - To move the cursor, press the left or right arrow.
   - To change the case of letters, select .
   - To delete the previous character, select .
   - To enter numbers and symbols, select **123#**.
   - To finish entering your network name or password, select **OK**.
8. Use your computer or wireless device to select the Wi-Fi network name (SSID) displayed on the LCD screen, then enter the password shown.

   Note: Make a note of the SSID and password that appear.

   Computers and wireless devices can now access your scanner using the new network name and password.

Parent topic: Wi-Fi Direct (Simple AP) Mode Setup

Setting Up Wireless Scanning from a Smart Device Using Epson Smart Panel

You can use the Epson Smart Panel app to connect your Epson product to a wireless network or connect your smart device directly to the product. Epson Smart Panel is available on iOS and Android devices.

Make sure you have the following:

- A device that is connected to a wireless network
- The Epson Smart Panel app installed on the device
- The wireless network name (SSID) and password

1. Make sure the product is turned on and is ready to scan.

   Note: You must perform initial setup before setting up wireless scanning.

2. Open the Epson Smart Panel app on your device.
3. Do one of the following:
   - If the app automatically recognizes the product, follow the on-screen instructions to set up the wireless connection.
   - If the app does not automatically recognize the product, select the **+** icon and continue with the next step.
4. On the next screen, select **Connect to a New Product**.
5. Select your product from the list.

   Note: If your product is not listed, move closer to the product and try again. If the product is still not shown, connect your scanner to the wireless network again and then select **Connect to Existing Product** in the Epson Smart Panel app and follow the on-screen instructions. See the link below for wireless setup instructions.

6. Select **Next** to select the current wireless network.

   Note: If you want to connect the product to a different wireless network, select **Change another Wi-Fi SSID**.

7. Enter the password for the wireless network and select **OK**.

   The app starts configuring the product.

Your product is now connected to a wireless network and set up for use with the Epson Smart Panel app.

Parent topic: Wi-Fi Direct (Simple AP) Mode Setup

Related tasks

Starting a Scan from a Smartphone or Tablet

Using the Epson Smart Panel Mobile App

Wi-Fi Protected Setup (WPS)

If your network uses a WPS-enabled wireless router, you can quickly connect your product to the network using Wi-Fi Protected Setup (WPS).

Note: To check if your router is WPS-enabled, look for a button labeled **WPS** on your router. If there is no hardware button, there may be a WPS setting in the software for the device. Check your network product documentation for details.

Using WPS to Connect to a Network
Using WPS PIN Mode to Connect to a Network

Parent topic: Wi-Fi Networking

Using WPS to Connect to a Network

If you have a WPS-enabled wireless router, you can use Wi-Fi Protected Setup (WPS) to connect your product to the network.

1. Select the home icon, if necessary.
2. Press the icon.
3. Select **Start Setup**.

   If the network connection is already set up, the connection details are displayed. Tap **Change to Wi-Fi connection** or **Change Settings** to change the settings.
4. Select **Push Button Setup (WPS)**.
5. Follow the instructions on the LCD screen to complete WPS setup.

   Note: Make sure you press **Start Setup** within two minutes of activating WPS on your router.
6. Select the home icon to return to the home screen.

The Wi-Fi icon displayed on the LCD screen indicates your wireless connection status. If the product is not connected to the network, repeat these steps to try again.

Parent topic: Wi-Fi Protected Setup (WPS)

Related tasks

Setting Up Network Scanning

Using WPS PIN Mode to Connect to a Network

If you have a WPS-enabled wireless router that supports PIN mode, you can use Wi-Fi Protected Setup (WPS) PIN mode to connect your product to the network.

1. Select the home icon, if necessary.
2. Press the icon.
3. Select **Wi-Fi (Recommended)**.
4. Select **Start Setup** or **Change Settings**.
5. Select **Others**.
6. Select **PIN Code Setup(WPS)**.
7. Follow the instructions on the LCD screen to complete WPS setup.

   Note: Make sure you press **Start Setup** within two minutes of activating WPS on your router.

8. Select the home icon to return to the home screen.

The Wi-Fi icon displayed on the LCD screen indicates your wireless connection status. If the product is not connected to the network, repeat these steps to try again.

Parent topic: Wi-Fi Protected Setup (WPS)

Setting Up Network Scanning

You can set up network scanning to your product through a direct connection to your product.

First, manually configure your product to connect to your network. Then follow the instructions here to set up your computer for network scanning using the Epson Scan 2 Utility. Your product must be turned on and connected to the network.

Note: Make a note of the IP address or host name of the product so you can enter it in these steps.

1. Do one of the following to start the Epson Scan 2 Utility:
   - **Windows 11**: Click , then search for **Epson Scan 2 Utility** and select it.

- **Windows 10**: Click > **EPSON** > **Epson Scan 2 Utility**.
- **Windows 8.x**: Navigate to the **Apps** screen and select **Epson Scan 2 Utility**.
- **Windows 7**: Click > **All Programs** > **EPSON** > **Epson Scan 2** > **Epson Scan 2 Utility**.
- **Mac**: Open the **Applications** folder, click **Epson Software**, and click **Epson Scan 2 Utility**.

2. Select **Settings** from the Scanner drop-down list.

   You see a screen like this:

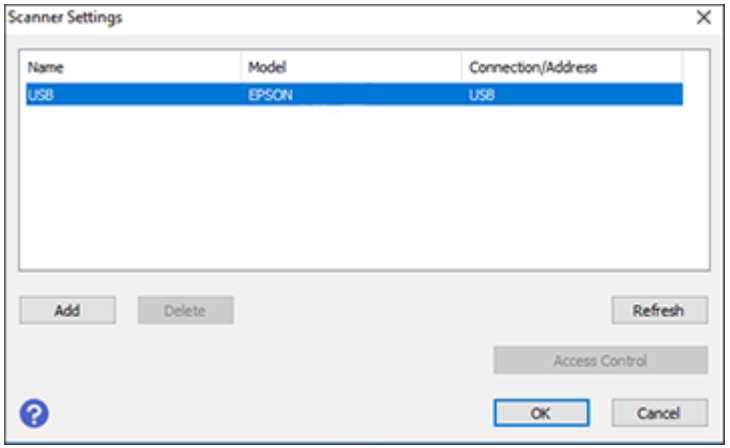

   Note: If you see an **Enable Editing** button (Windows) or the lock icon (Mac), click it so that you can modify the product settings.

3. Select your product and click **Add**.

You see a screen like this:

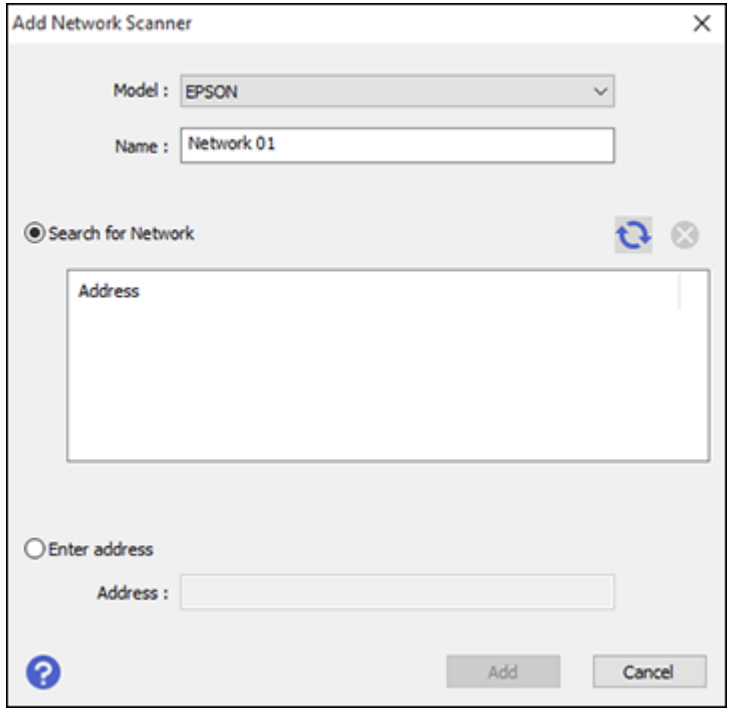

4. Do one of the following:
   - Under **Search for Network**, select the IP address of your Epson product and click **Add**.
   - Select the **Enter address** setting, type in the IP address or host name of your Epson product, and click **Add**.
5. Click **OK** to check the connection.

   You see a confirmation message.
6. Click **OK** to save your settings and close the Epson Scan 2 Utility.

Determining the Product's IP Address

Parent topic: Wi-Fi Networking

Related tasks

Selecting Wireless Network Settings from the Control Panel

Determining the Product's IP Address

If you have multiple products on your network, you need to know the IP address of the product when setting up network scanning.

1. Do one of the following to start EpsonNet Config:
   - **Windows 11**: Click , then search for **EpsonNet Config** and select it.
   - **Windows 10**: Click > **EpsonNet** > **EpsonNet Config**.
   - **Windows 8.x**: Navigate to the **Apps** screen and select **EpsonNet Config**.
   - **Windows 7**: Click , and select **All Programs**. Select **EpsonNet** > **EpsonNet Config** > **EpsonNet Config**.
   - **Mac**: Open the **Applications** folder and select **Epson Software** > **EpsonNet** > **EpsonNet Config** > **EpsonNet Config**.
2. Locate your product in the list and write down the IP address.

Parent topic: Setting Up Network Scanning

Configuring Email Server Settings

If you want to send a scanned file by email, you need to configure the email server. You can select settings for the email server using the control panel on the product.

1. Select the home icon, if necessary.
2. Select **Settings**.
3. Select **Network Settings** > **Advanced** > **Email Server** > **Server Settings**.
4. Select an authentication method, then select the settings you want to use. Contact your internet service provider if necessary to confirm the authentication method for the email server.
5. Select **Proceed** to save your settings.
6. Select **Close** to exit.
7. Select **Connection Check** to verify the connection to the email server.

Email Server Settings

Parent topic: Wi-Fi Networking

Related tasks
Scanning to Email

Email Server Settings

Setting name	Available options	Description
Authentication Method	**Off** **SMTP AUTH** **POP before SMTP**	Selects the authentication method for the scanner to access the mail server. **SMTP AUTH**: Authenticates on the SMTP server (outgoing mail server) when sending the email. The mail server needs to support SMTP authentication. **POP before SMTP** Authenticates on the POP3 server (receiving mail server) before sending the email. When you select this item, set the POP3 server.
Authenticated Account	—	Lets you enter a user name or email address for the mail server. Used with the **POP before SMTP** and **SMTP AUTH** methods.
Authenticated Password	—	Lets you enter a password for the authenticated account. Used with the **POP before SMTP** and **SMTP AUTH** methods.
Sender's Address	—	Lets you enter the email address to be displayed to the sender
SMTP Server Address	—	Lets you enter the address of the SMTP server
SMTP Server Port Number	—	Lets you enter the port number of the SMTP server. The default port is 25.
Secure Connection	**None** **STARTTLS** **SSL/TLS**	Selects the encryption protocol used by the email server. Used with the **SMTP AUTH** or **Off** authentication methods.
Certificate Validation	**Enable** **Disable**	Determines whether the CA Certificate is validated. You must import a CA certificate to use this setting.
POP3 Server Address	—	Lets you enter the address of the POP3 server using IPv4 or FQDN format.
POP3 Server Port Number	—	Lets you enter the port number of the POP3 server. The default port is 25.

Parent topic: Configuring Email Server Settings

Changing or Updating Network Connections

See these sections to change or update how your product connects to a network.

Changing a USB Connection to a Wi-Fi Connection

Connecting to a New Wi-Fi Router

Parent topic: Wi-Fi Networking

Changing a USB Connection to a Wi-Fi Connection

If you have already connected your product to your computer using a USB connection, you can change to a Wi-Fi connection.

1. Disconnect the USB cable from your product.
2. Uninstall your product software.
3. Download and install your product software from the Epson website.
4. Follow the instructions in the installer to setup a Wi-Fi connection.

Parent topic: Changing or Updating Network Connections

Related tasks

Disabling Wi-Fi Features

Connecting to a New Wi-Fi Router

If you change the wireless router you have been using on your network, you need to update your product's Wi-Fi connection to the new router.

Note: If your router uses a single network name (SSID) for both the 2.4 GHz and 5 GHz band, give each band its own network name (SSID) instead, such as Home Network 2.4 GHz and Home Network 5 GHz. See your router documentation for instructions.

1. Do one of the following:
   - **Windows**: Uninstall your product software.
   - **Mac**: Go to the next step.
2. Download and install your product software from the Epson website.

Parent topic: Changing or Updating Network Connections

Related tasks

Uninstalling Product Software - Windows

Disabling Wi-Fi Features

You may need to disable your product's Wi-Fi features if you change your network connection type or need to solve a problem with your network connection.

1. Select the home icon, if necessary.
2. Press the icon.
3. Select **Wi-Fi (Recommended)**.
4. Select **Change Settings**.
5. Select **Others**.
6. Select **Disable Wi-Fi**.
7. Select **Start Setup** to disable Wi-Fi.

Parent topic: Wi-Fi Networking

Loading Originals

Follow the instructions here to load your originals into the product.

Note: The illustrations are for reference only. Although they may differ slightly from the actual product, the steps are the same unless otherwise noted.

Note: Epson Smart Panel can scan standard-size originals, plastic cards, and a passport. It cannot scan other originals.

Scanner Positions
Loading Originals in the Input Tray
Loading Large Originals
Loading Long Paper
Loading Booklets
Loading Passports
Loading Multiple Sizes of Originals in the Input Tray
Loading Plastic and Laminated Cards in the Input Tray
Loading Special Originals

Scanner Positions

Your product uses two different positions for scanning, depending on the type of original being scanned. The table below shows the scanner position used for various types of originals.

For details on how to change the scanner position, see the link at the end of this section.

Scanner Position	Description	Supported Originals
Vertical path position	Use the vertical path position for scanning thin paper, receipts, or multiple sheets of standard-size originals. Scanned originals are ejected from the output tray at the top of the scanner.	• Standard size originals up to this size: Letter (8.5 × 11 inches [216 × 279 mm]) or A4 (8.3 × 11.7 inches [210 × 297 mm]) • Thin paper (40 g/m2) • Receipts less than 15.5 inches (393.7 mm) in length • Business cards • Mixture of originals
Straight path position	Use the straight path position for scanning thick or long documents, envelopes, passports, cards, and other irregular size originals. Scanned originals are ejected from the output slot at the front of the scanner. When scanning in the straight path position, make sure there is enough space in front of the scanner for the ejected originals. If the scanned image is affected by the originals ejecting below the product, try placing the product on the edge of a table where the ejected originals can drop freely.	• Large size originals • Long paper • Receipts over 15.5 inches (393.7 mm) in length • Plastic cards • Laminated cards • Booklets • Passports • Picture post cards • Important or essential originals (in a carrier sheet) • Envelopes • Irregular size originals (in a carrier sheet)

Parent topic: Loading Originals

Related references

Scanner Position

Loading Originals in the Input Tray

You can load originals that meet the document specifications in the input tray.

Caution: Do not load valuable original documents or artwork, directly into the input tray. This may wrinkle or damage the original. Load these originals using an optional carrier sheet.

The steps below describe loading originals of the same size. To load originals of multiple sizes at once, see the link at the end of this section.

1. Make sure the vertical path position icon is displayed.

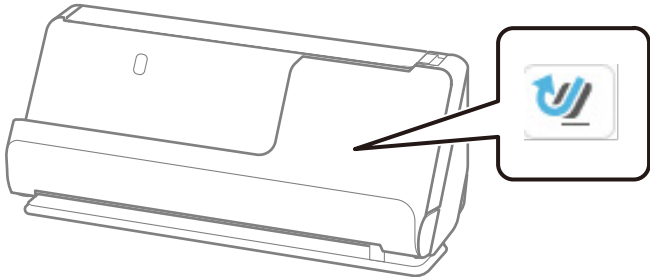

Note: If the straight path position icon is displayed, pull the position selector to the right and tilt the scanner forward.

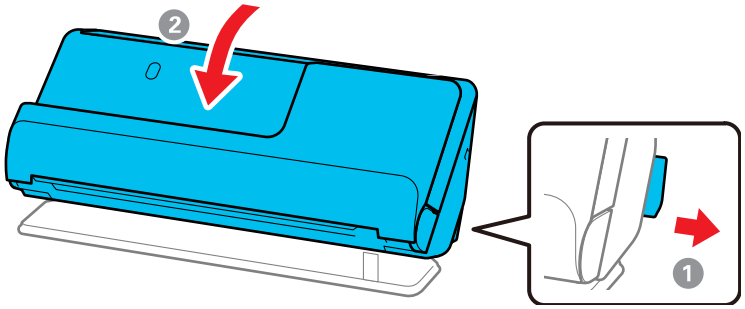

2. Open the input tray.

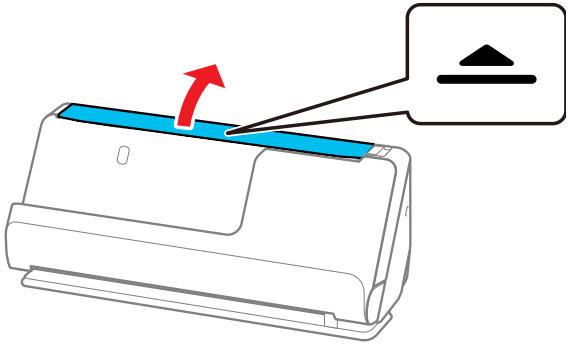

3. Raise the input tray extension.

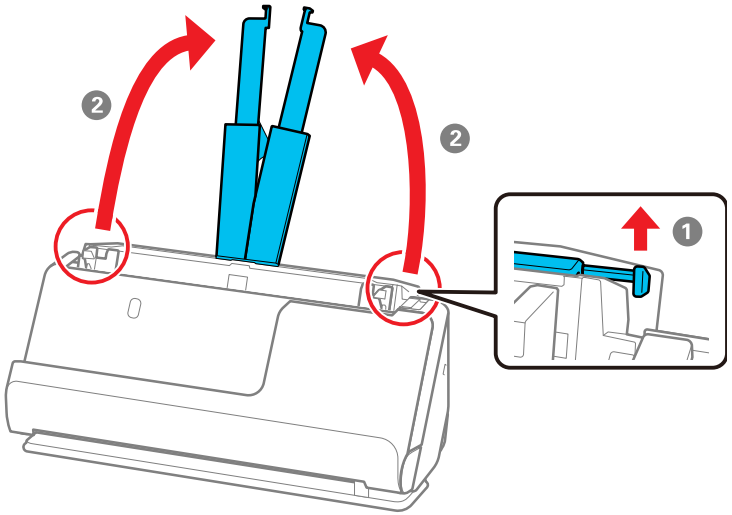

4. Slide the input tray edge guides all the way out.

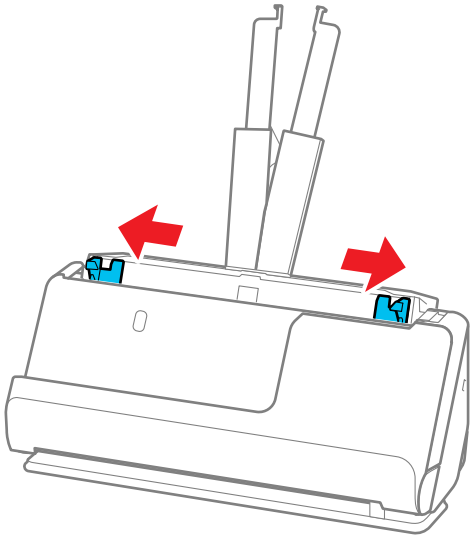

5. If you are loading a multi-page original, fan your stack of originals.

   Note: If you are loading an original that is 15.5 inches (393.8 mm) or longer, load only one sheet at a time.

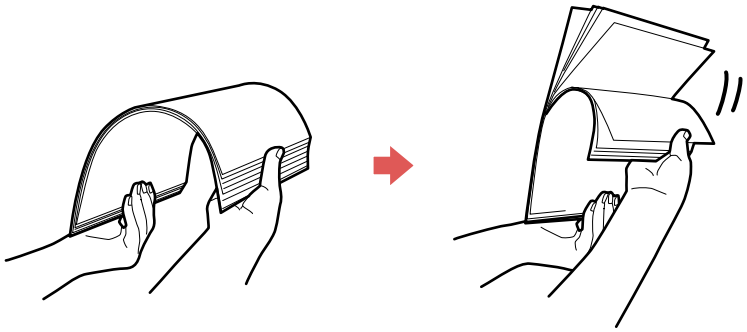

6. Stack the originals with the printed side facing up and slide the stack so the leading edge is at an angle as shown.

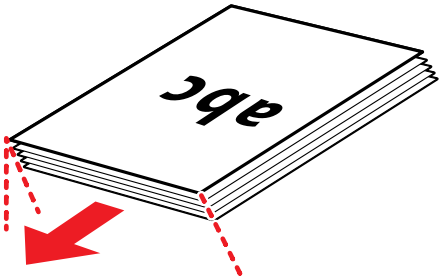

7. Do one of the following to load originals:
   - Load standard originals into the input tray printed side up and top edge first, and guide them in until they meet resistance.

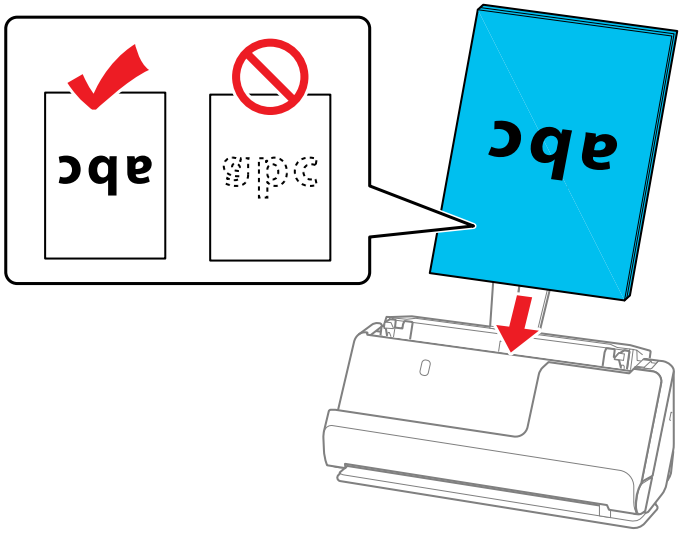

- If you are loading hole-punched originals, load them with the holes facing down or to the side as shown. The holes must be within 1.2 inches (30 mm) of the edge of the originals.

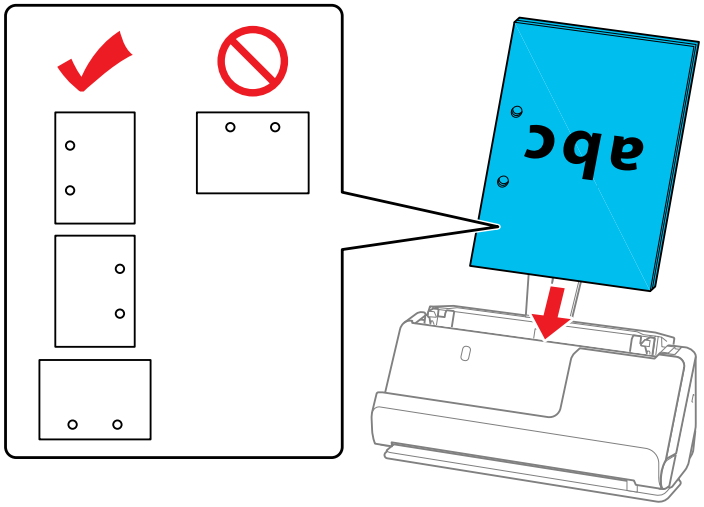

- If you are loading folded originals, load them so that the valley fold (the dotted line) is at the front of the scanner and on the ADF side as shown. You can load up to 10 sheets. Originals with a hard

fold line may not be fed properly. For originals such as these, flatten them so that the height of the fold is 0.2 inches (5 mm) or less before loading it.

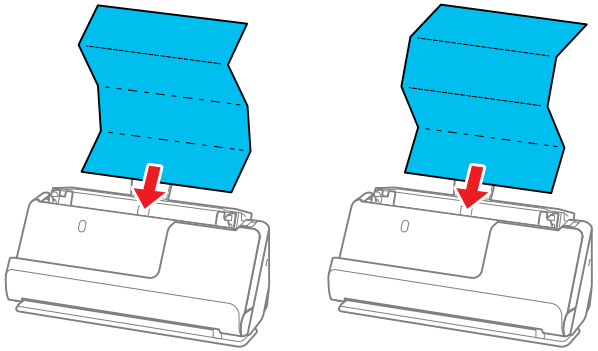

- If you are loading thick originals (127 g/m² or more), switch the scanner to the straight path position and load only one original at a time. If thicker paper does not eject properly, try placing the product on the edge of a table where the ejected originals can drop freely.

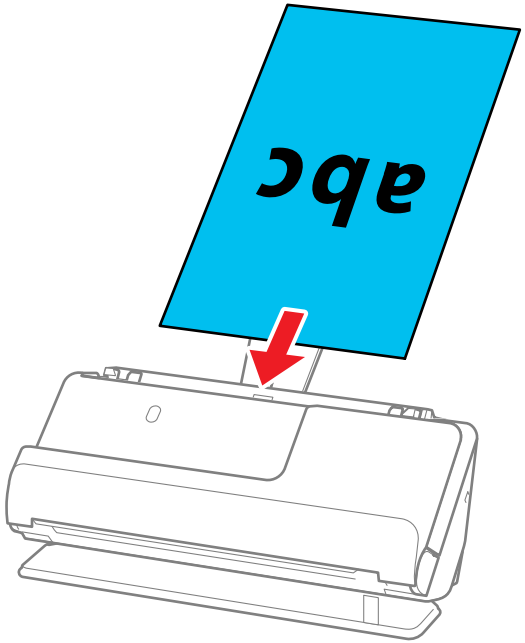

Note: You can check the scanner position on the LCD screen. If the straight path icon is displayed, the scanner is in the correct position. If the vertical path icon is displayed, pull the lever on the back and tilt the scanner backwards.

- If you are loading irregular shaped originals, switch the scanner to the straight path position and load the original into an optional carrier sheet with the back of the original facing up.

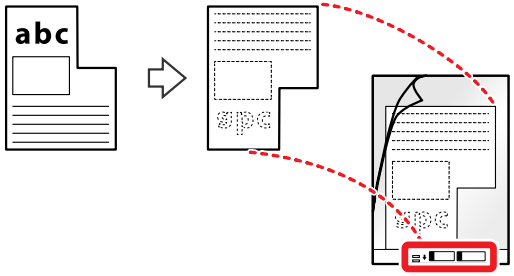

Flip the carrier sheet over before loading it in the input tray.

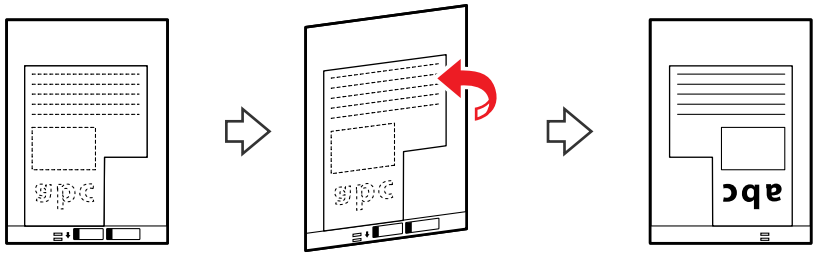

Load the original into the input tray as shown.

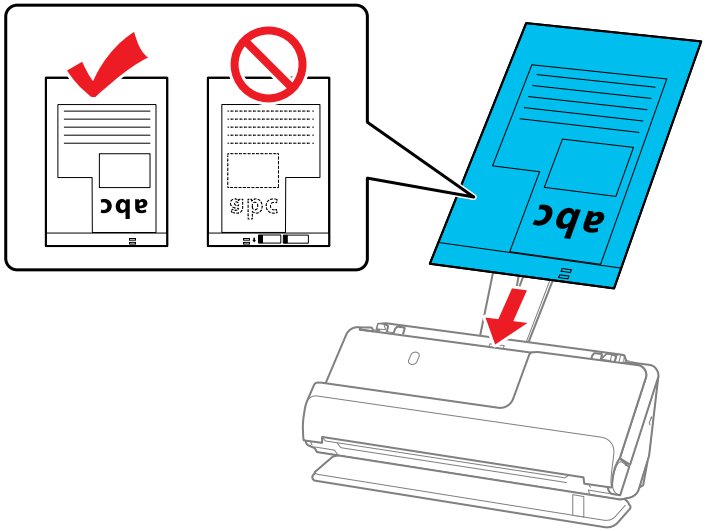

Note: Use only the carrier sheet designed for your product. The carrier sheet is automatically recognized by the product by the two small rectangular holes on the front edge. Keep the holes

clean and not covered. Do not load a carrier sheet that has scratches on it or one that has been scanned more than 3,000 times.

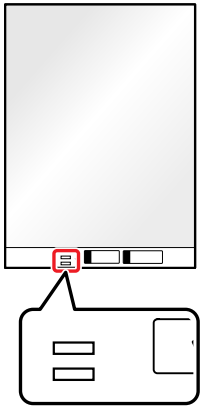

- If you are loading envelopes, switch the scanner to the straight path position and load the envelope short side first with the side to be scanned facing up. For envelopes with the flap side on

the shorter side, you can load the envelope with the flap side facing up. Insert the envelope into the ADF until it meets resistance.

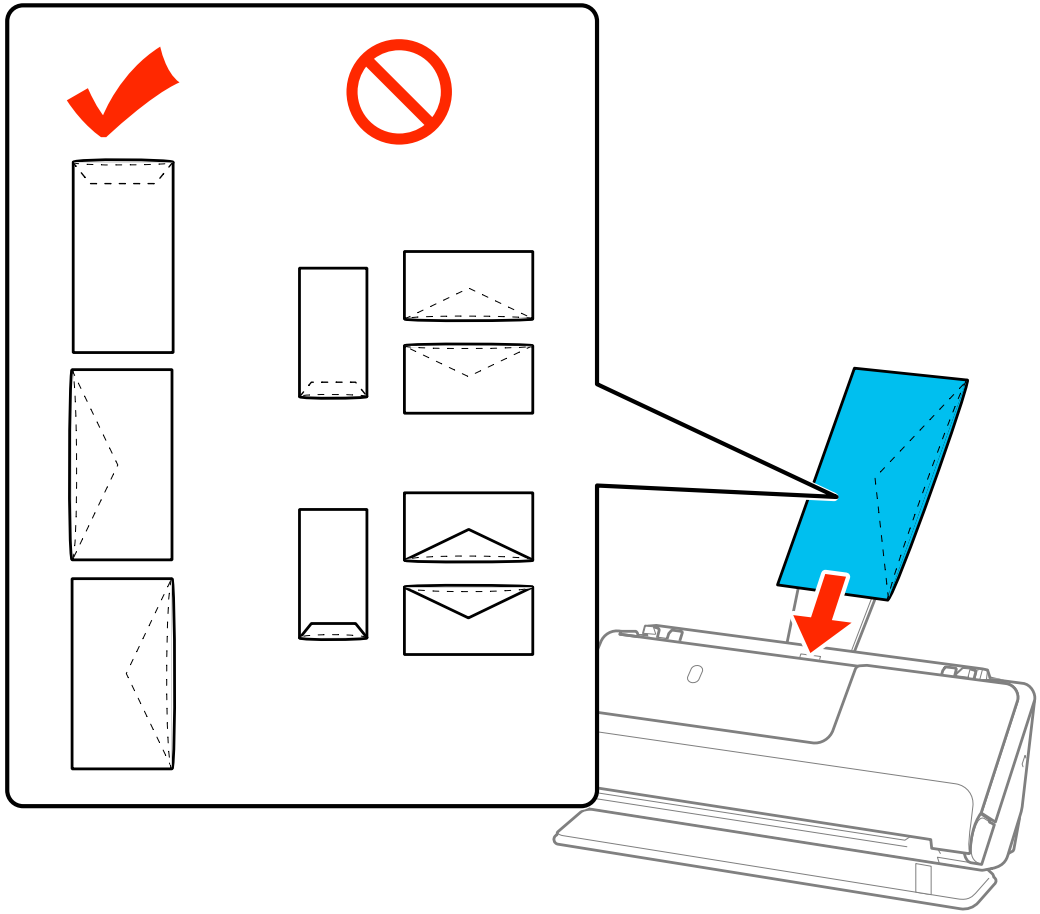

8. Adjust the edge guides to fit the edges of the original so that there are no gaps. Otherwise, the original may skew.

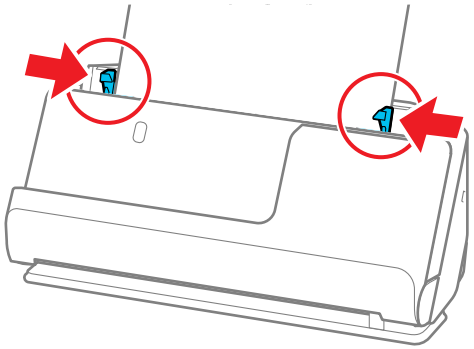

Note: If the edge guides are too loose or too tight, the original may not feed correctly. Align the edge guides so that they lightly touch the edges of the original.

If the document extends beyond the input tray extension, support the original as it enters into and ejects from the product to prevent it from skewing. When scanning thin originals or originals that tend to curl after scanning, we recommend extending the input and output tray paper supports. After loading the original, press both of the buttons to raise the supports.

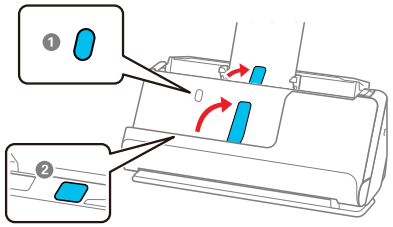

Parent topic: Loading Originals

Related references

Original Document Specifications
Plastic and Laminated Card Specifications
Special Original Specifications
Scanner Positions
Optional Accessories and Replacement Parts

Related tasks

Loading Multiple Sizes of Originals in the Input Tray

Related topics

Scanning

Loading Large Originals

You can load large originals up to A2 (16.5 × 23.4 inches [420 × 594 mm]) size. Make sure the original meets the specifications before loading it. Also make sure there is enough space in front of the scanner for the ejected originals.

Note: Originals larger than A3 (11.7 × 16.5 inches [297 × 420 mm]) must be folded in half. You can scan both sides of the original and stitch the images together using Epson ScanSmart.

Note: To combine the scanned images, open Epson ScanSmart, click the **Settings** button > **Scanner Settings** tab > **Scan Settings**. Then, select **Double-Sided** as the **Scanning Side** setting and select **Left & Right** as the **Stitch Images** setting in the Epson Scan 2 window. See the software help for details.

1. Make sure the straight path position icon is displayed.

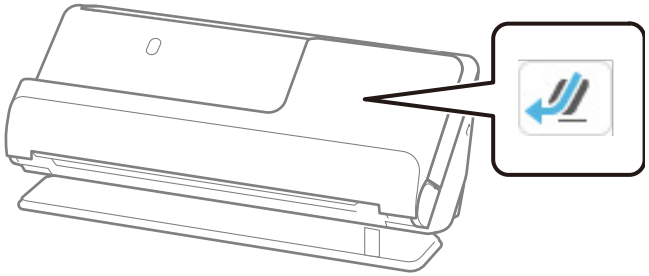

Note: If the vertical path position icon is displayed, pull the position selector to the right and tilt the scanner backwards.

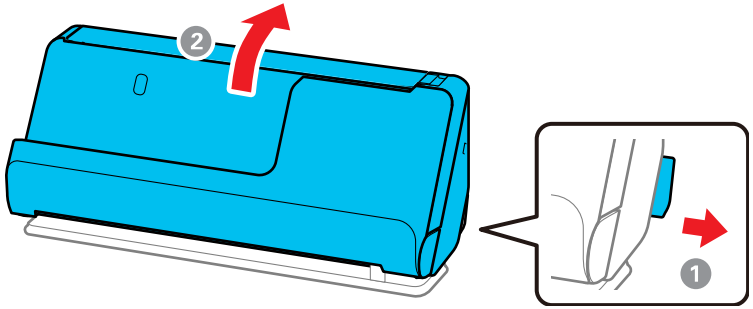

2. Open the input tray.

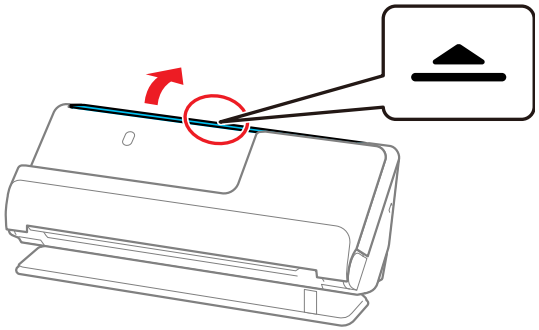

3. Raise the input tray extension.

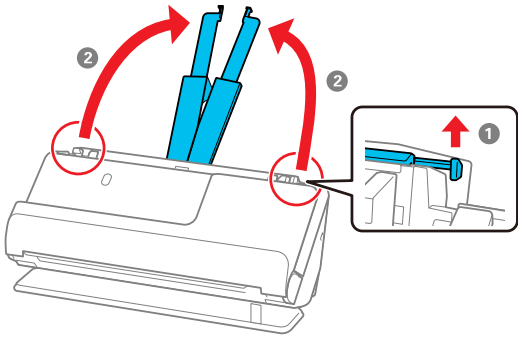

4. Slide the input tray edge guides all the way out.

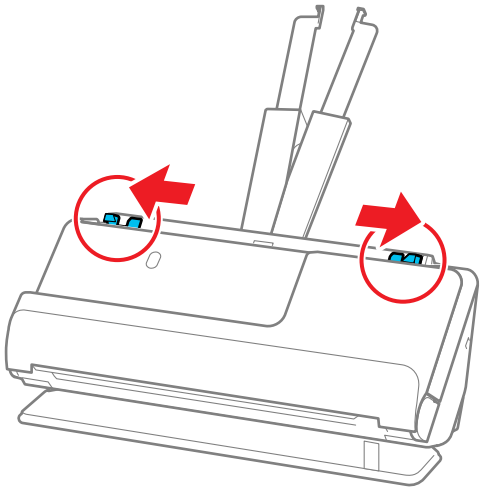

5. Fold the original in half so that the side to be scanned is facing out.

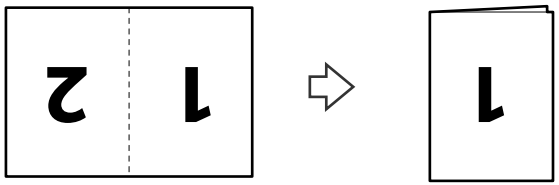

6. Load the folded original in the input tray with page 1 facing up as shown, then guide it in until it meets resistance.

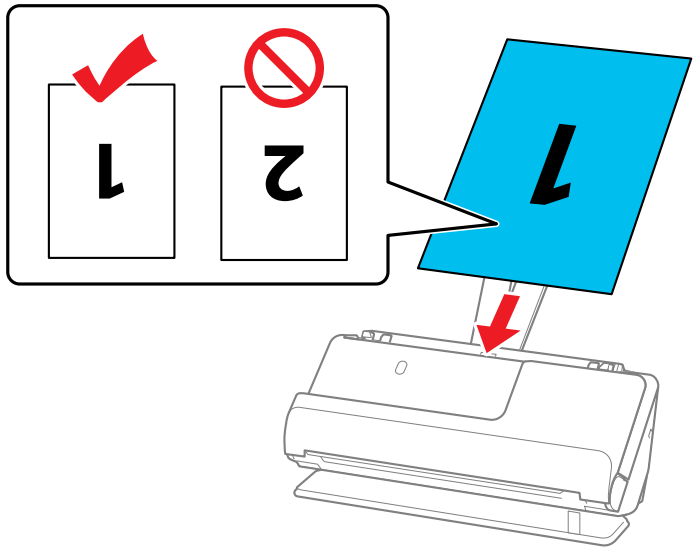

7. Adjust the edge guides to fit the edges of the original so that there are no gaps. Otherwise, the original may skew.

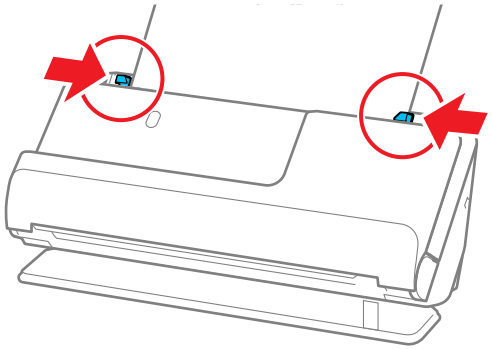

Note: If the edge guides are too loose or too tight, the original may not feed correctly. Align the edge guides so that they lightly touch the edges of the original.

8. Turn off the **Detect Double Feed** setting on the Main Settings tab in Epson Scan 2.

Note: When using Epson ScanSmart, you can open the Epson Scan 2 screen by clicking the **Settings** button > **Scanner Settings** tab > **Scan Settings**.

Parent topic: Loading Originals

Loading Long Paper

You can load long paper up to 220 inches (5588 mm) long in the input tray. Make sure the original meets the specifications before loading it.

Note: Long paper means originals longer than 15.5 inches (393.7 mm). The scanning speed is slower when scanning long paper. You cannot scan long paper using Epson Smart Panel.

1. Make sure the straight path position icon is displayed.

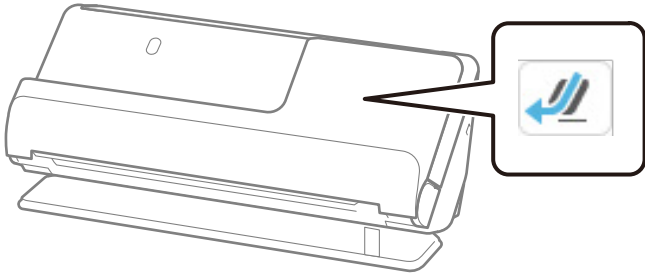

Note: If the vertical path position icon is displayed, pull the position selector to the right and tilt the scanner backwards.

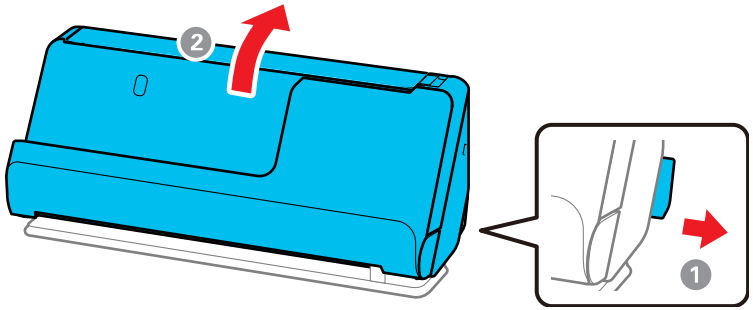

2. Open the input tray.

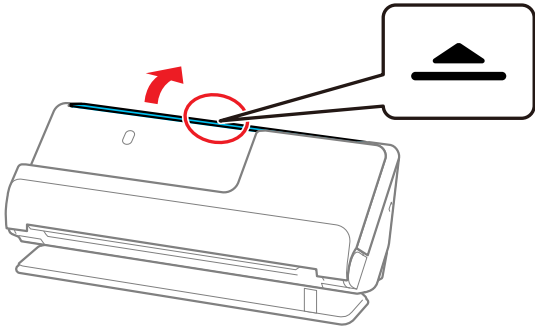

3. Raise the input tray extension.

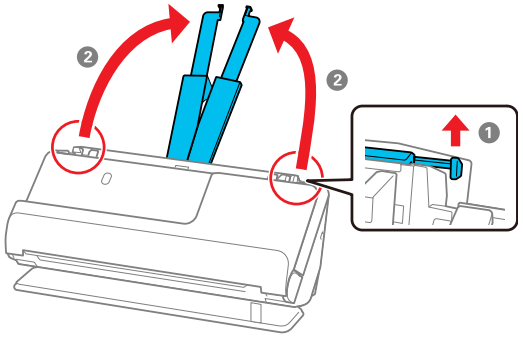

4. Slide the input tray edge guides all the way out.

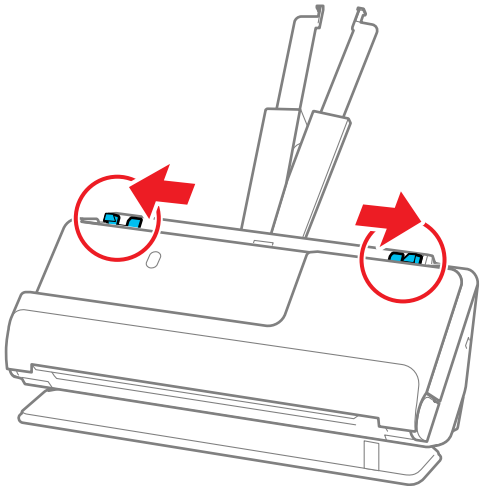

5. Load the original into the input tray printed side up and top edge first, and guide it in until it meets resistance.

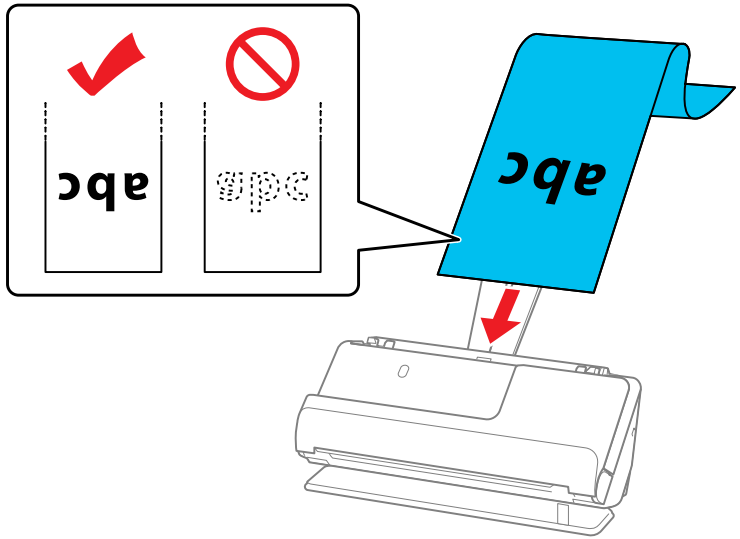

When loading long paper, support it at the input side so that it does not drop out of the ADF, and the output side so that the ejected paper does not get jammed.

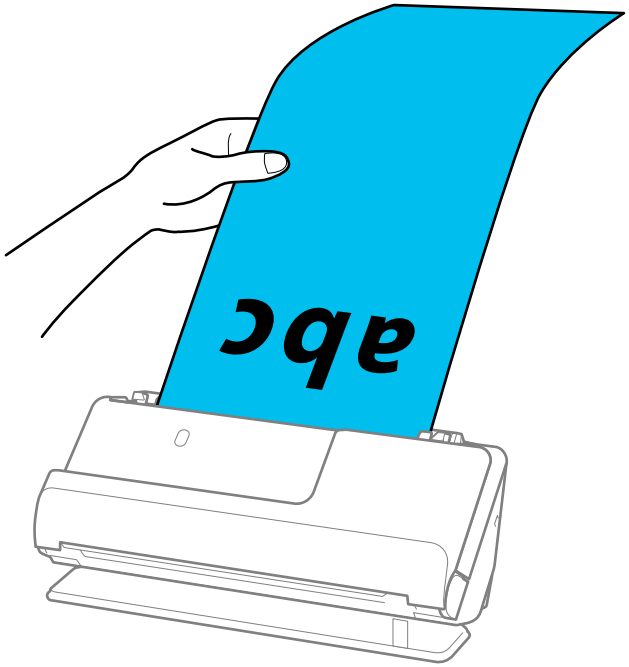

6. Adjust the edge guides to fit the edges of the original so that there are no gaps. Otherwise, the original may skew.

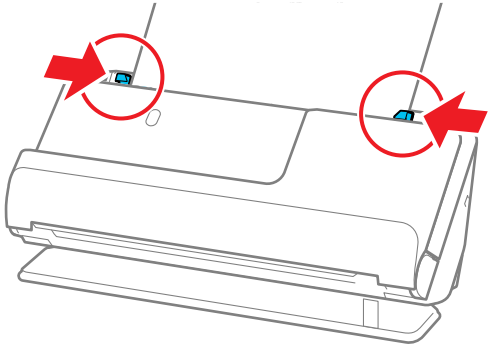

Note: If the edge guides are too loose or too tight, the original may not feed correctly. Align the edge guides so that they lightly touch the edges of the original.

Note: Support the original with both hands to prevent it from skewing while scanning.

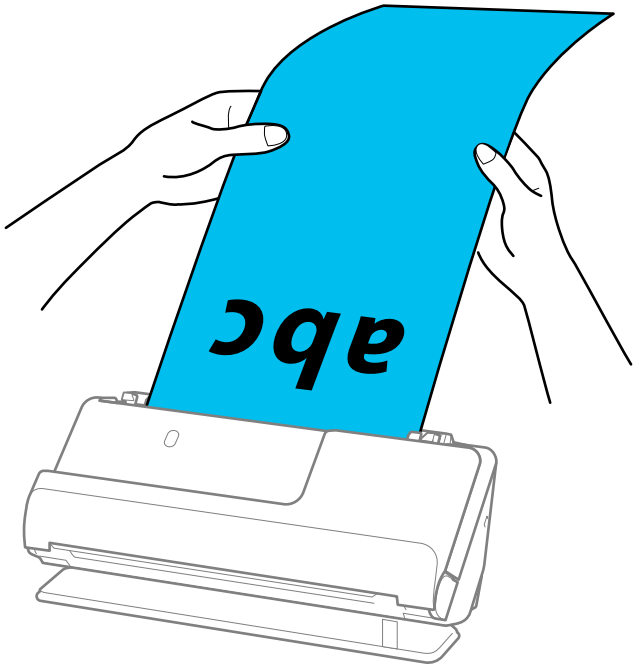

7. Specify the paper size in the Epson Scan 2 window.

   Note: When using Epson ScanSmart, you can open the Epson Scan 2 screen by clicking the **Settings** button > **Scanner Settings** tab > **Scan Settings**.

   The table shows the maximum length according to the scanning resolution and the scanning method.

Scanning Method	Resolution	Maximum Length
Scanning from a computer	50 to 200 dpi	220 inches (5588 mm)
Scanning from the control panel using the **Computer** option	201 to 300 dpi	215 inches (5461 mm)
	301 to 600 dpi	53 inches (1346 mm)
Scanning from the scanner's control panel using the following options: • Network Folder/FTP • Email • Cloud • USB drive	50 to 300 dpi	36 inches (914.4 mm)
	301 to 600 dpi	Long paper not supported
Scanning from the scanner's control panel using the WSD option	100 dpi 300 dpi	Long paper not supported
Scan with Epson Smart Panel	200 dpi	
	300 dpi	
	600 dpi	

Parent topic: Loading Originals

Loading Booklets

You can load small booklets into the scanner. Make sure the booklet meets the specifications before loading it.

Note: You can scan A5-sized booklets that are less than 0.20 inches (5 mm) thick when closed. You cannot scan booklets using Epson Smart Panel.

1. Make sure the straight path position icon is displayed.

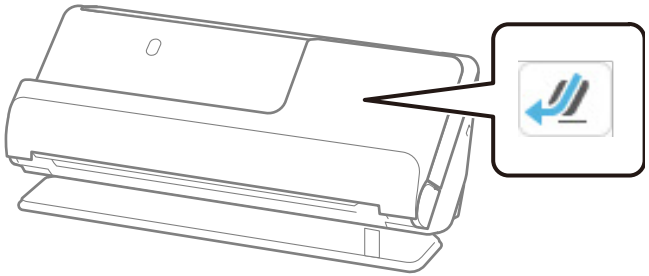

Note: If the vertical path position icon is displayed, pull the position selector to the right and tilt the scanner backwards.

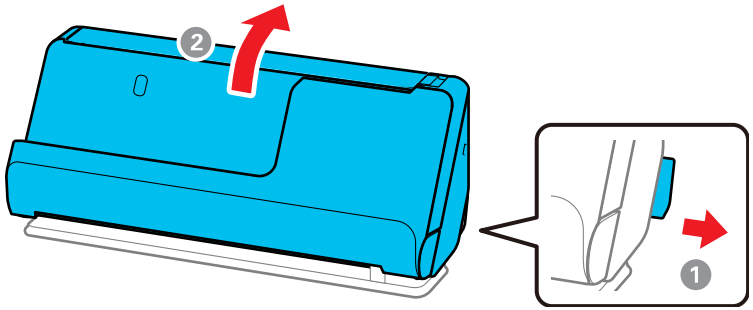

2. Open the input tray.

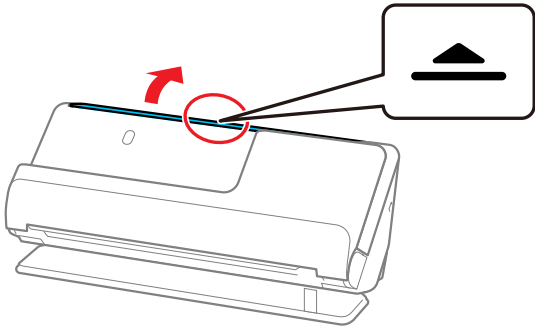

3. Raise the input tray extension.

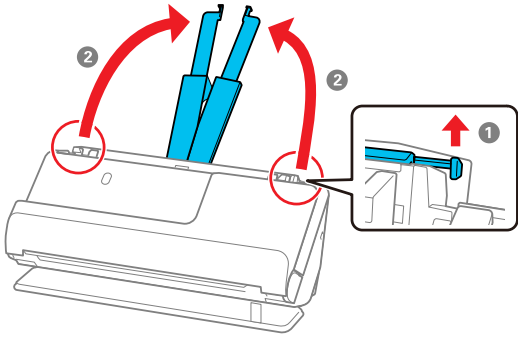

4. Slide the input tray edge guides all the way out.

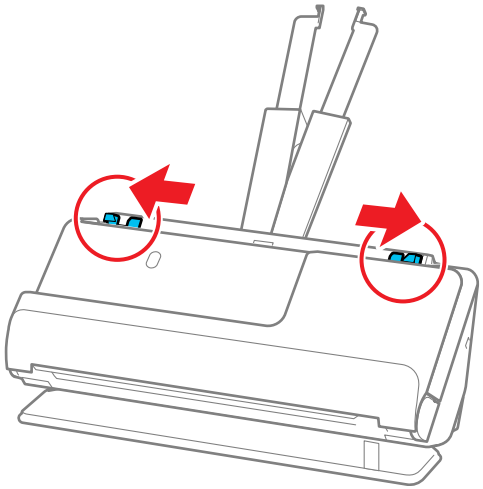

5. Load the original into the input tray printed side up and with the thicker edge (the side with more pages) facing first, and guide it in until it meets resistance.

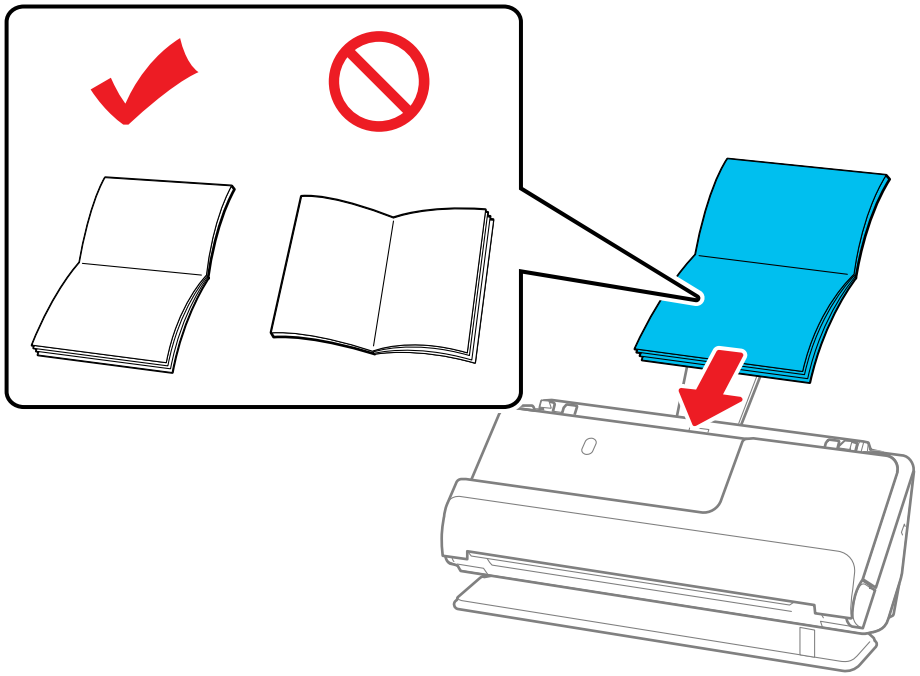

6. Adjust the edge guides to fit the edges of the original so that there are no gaps. Otherwise, the original may skew.

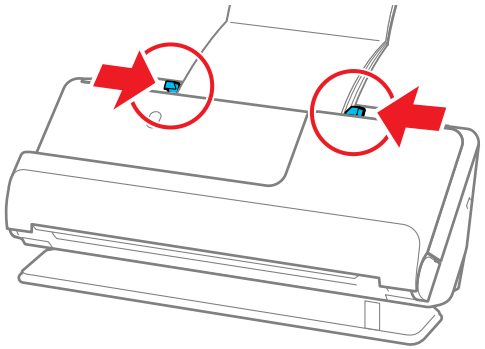

Note: If the edge guides are too loose or too tight, the original may not feed correctly. Align the edge guides so that they lightly touch the edges of the original.

7. Support the top of the booklet with your hand to prevent it from closing or falling out of the ADF. If the scanned images are affected by the originals ejecting below the product, try placing the product on the edge of a table where the ejected originals can drop freely.

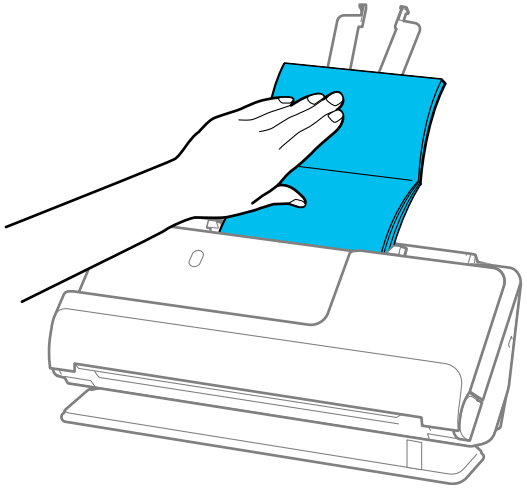

Note: When scanning booklets, select **Booklets** as the **Document Size** and turn off the **Detect Double Feed** setting on the Main Settings tab in Epson Scan 2.

Parent topic: Loading Originals

Loading Passports

You can load A5-sized passports that are less than 0.20 inches (5 mm) thick in the input tray. For thicker passports, use an optional passport carrier sheet. Make sure the original meets the specifications before loading it.

1. Make sure the straight path position icon is displayed.

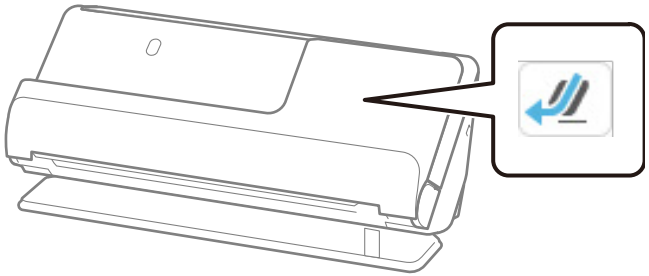

Note: If the vertical path position icon is displayed, pull the position selector to the right and tilt the scanner backwards.

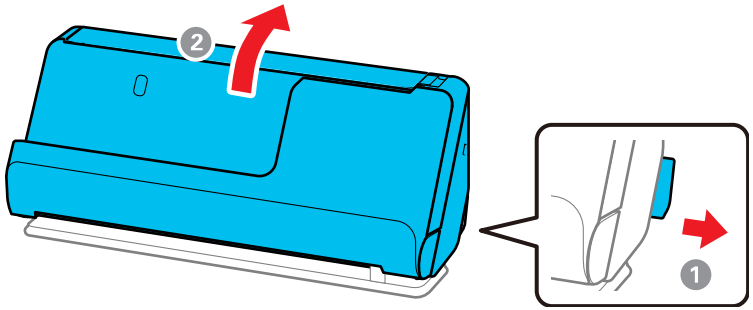

2. Open the input tray.

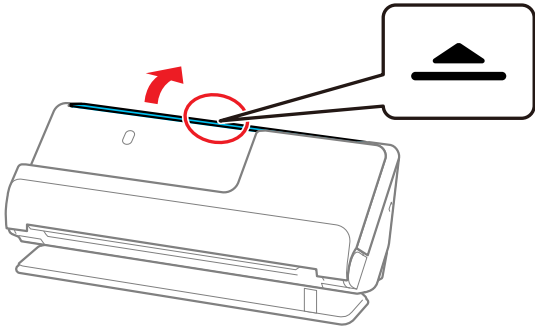

3. Raise the input tray extension.

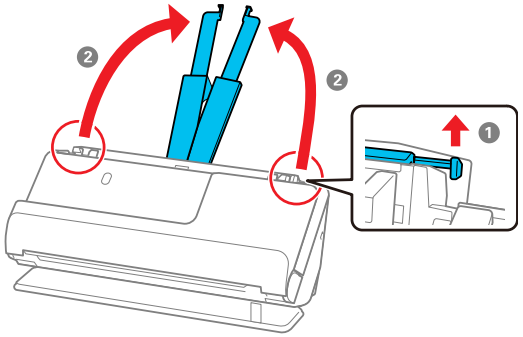

4. Slide the input tray edge guides all the way out.

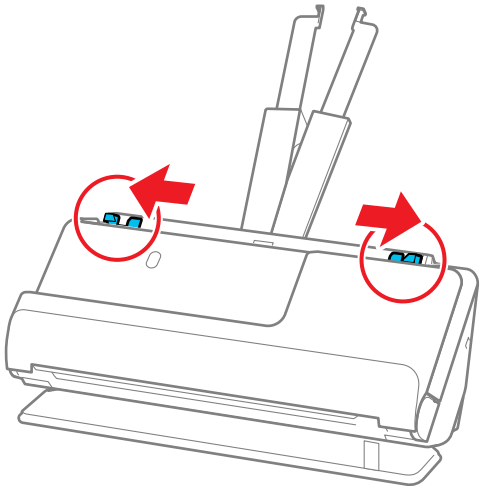

5. Load the passport into the input tray printed side up and with the thicker edge (the side with more pages) facing first, and guide it in until it meets resistance.

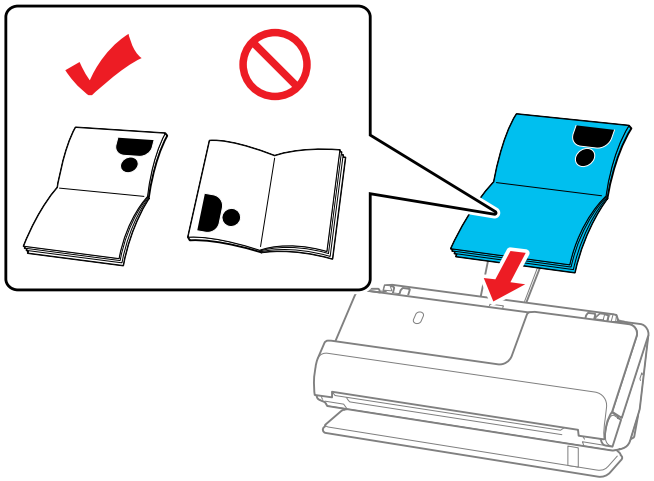

If you are using an optional passport carrier sheet, load the passport into the carrier sheet printed side up and with the thicker edge (the side with more pages) facing first, then place the carrier sheet into the input tray and guide it in until it meets resistance.

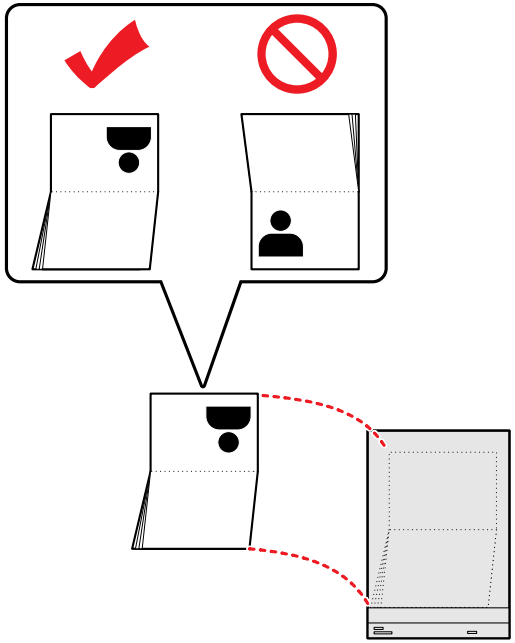

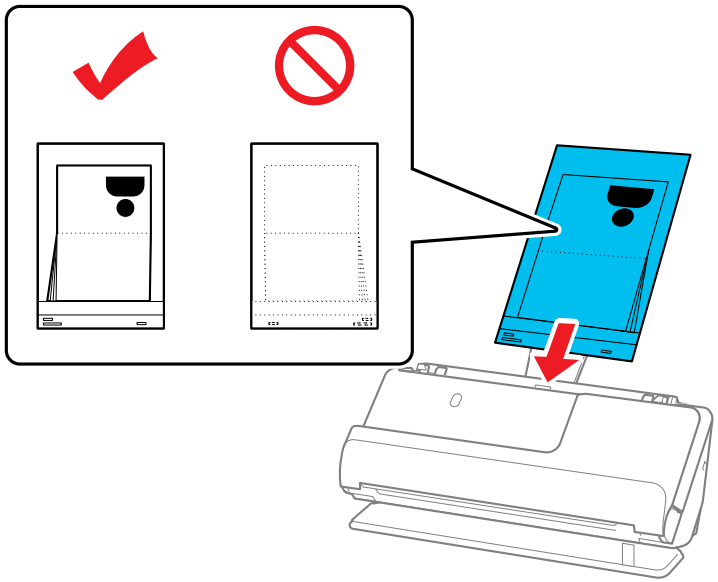

Note: Do not use a passport carrier sheet that is scratched or has been scanned more than 3,000 times. Use only the passport carrier sheet that is designed for your product.

6. Adjust the edge guides to fit the edges of the original so that there are no gaps. Otherwise, the original may skew.

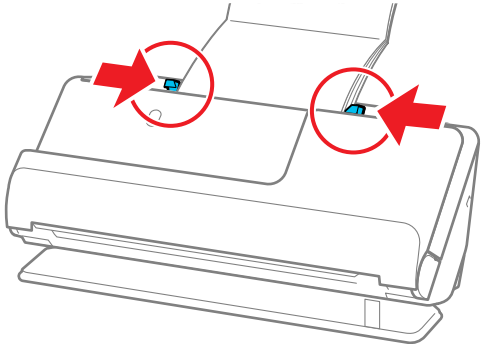

Note: If the edge guides are too loose or too tight, the original may not feed correctly. Align the edge guides so that they lightly touch the edges of the original.

7. Support the top of the passport with your hand to prevent it from closing or falling out of the ADF. If the scanned images are affected by the originals ejecting below the product, try placing the product on the edge of a table where the ejected originals can drop freely.

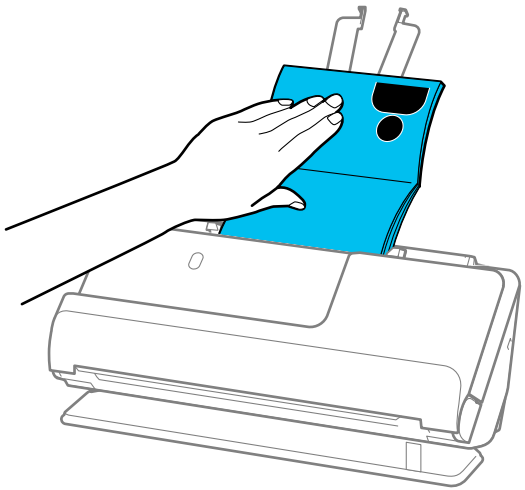

Note: When scanning passports, select **Passport** as the **Document Size** and turn off the **Detect Double Feed** setting on the Main Settings tab in Epson Scan 2.

Note: When using Epson ScanSmart, you can open the Epson Scan 2 screen by clicking the **Settings** button > **Scanner Settings** tab > **Scan Settings**.

Parent topic: Loading Originals

Loading Multiple Sizes of Originals in the Input Tray

You can load originals of different sizes, paper types, and thicknesses at one time in the input tray. Just make sure they meet the original document specifications.

Caution: Do not load valuable original documents or artwork directly into the input tray. This may wrinkle or damage the original. Load these originals using an optional carrier sheet. If originals are fed askew, check the scanned images. If the image is skewed, load fewer originals and scan again.

Note: You can also scan originals of different paper types and thickness by loading them one by one and selecting **Automatic Feeding Mode** on the Main Settings screen in Epson Scan 2.

Note: When using Epson ScanSmart, you can open the Epson Scan 2 screen by clicking the **Settings** button > **Scanner Settings** tab > **Scan Settings**.

1. Make sure the vertical path position icon is displayed.

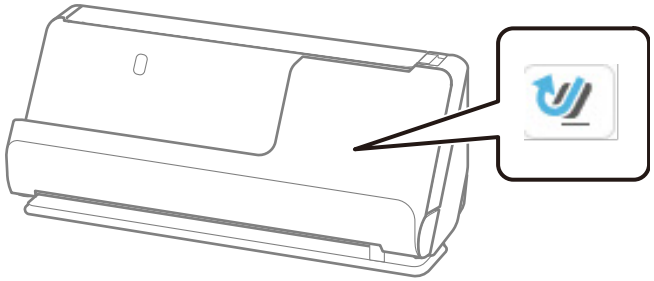

Note: If the straight path position icon is displayed, pull the position selector to the right and tilt the scanner forward.

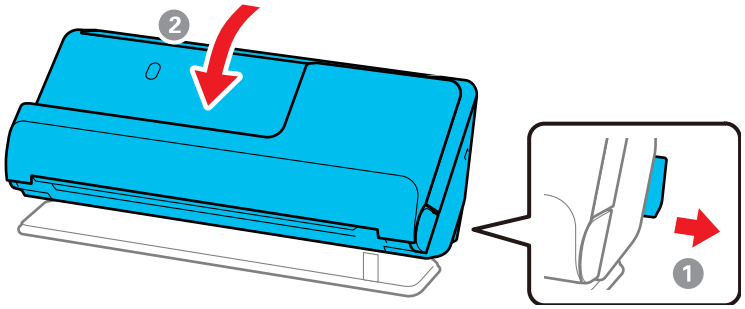

2. Open the input tray.

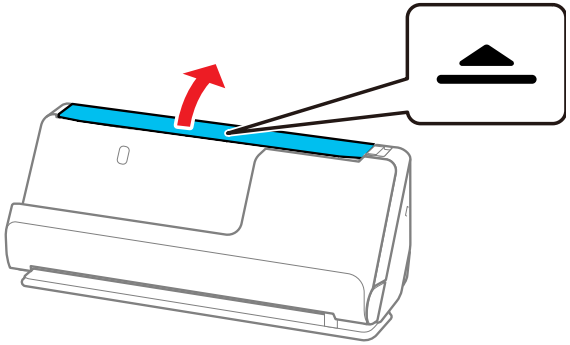

3. Raise the input tray extension.

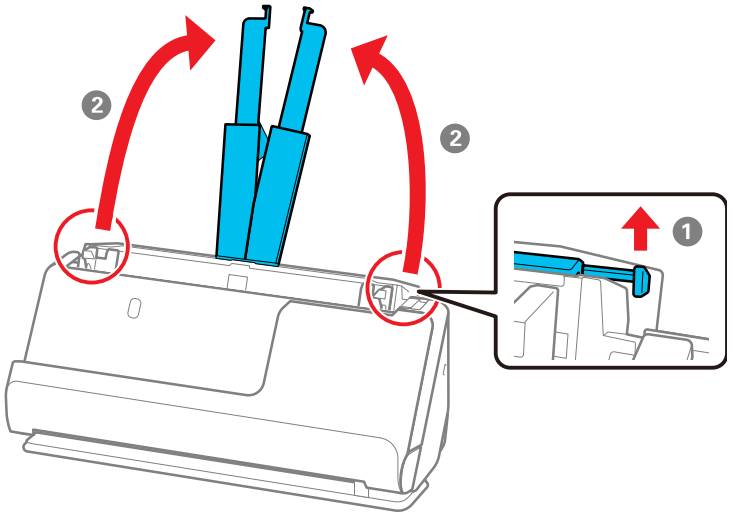

4. Slide the input tray edge guides all the way out.

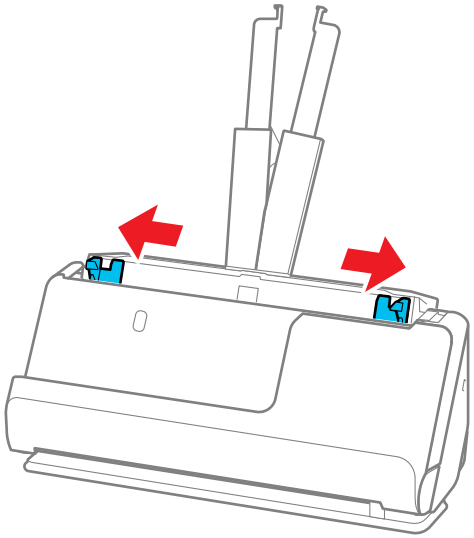

5. Load the originals in the center of the input tray in descending order of paper size with the widest at the back and the narrowest at the front. Slide them in until they meet resistance. Make sure the

printed sides are facing up and the leading edges are aligned in the input tray (refer to the triangle on the scanner as a guide).

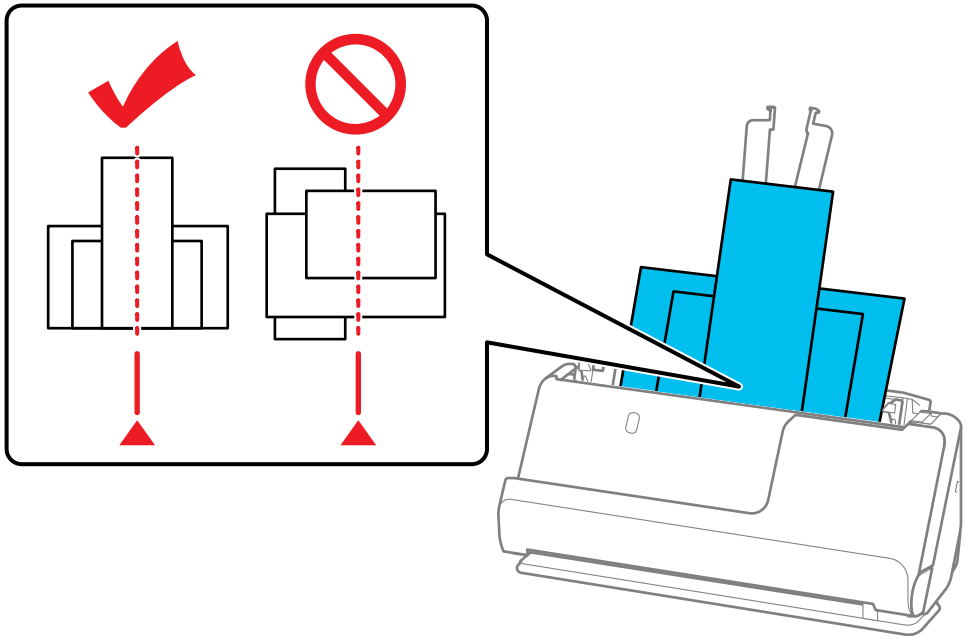

6. Slide the edge guides against the edges of the widest original.

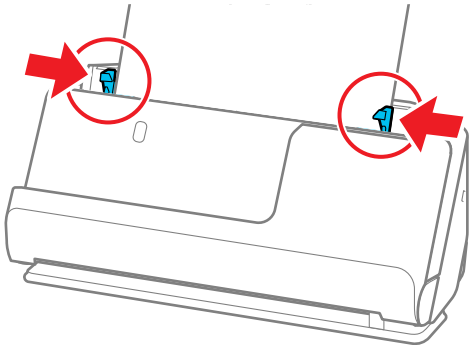

Note: If the edge guides are too loose or too tight, the original may not feed correctly. Align the edge guides so that they lightly touch the edges of the original.

Original Document Specifications

Parent topic: Loading Originals

Related references

Scanner Positions

Related topics

Scanning

Original Document Specifications

You can load original documents that meet these specifications in your product.

Paper type	Paper size	Paper weight	Loading capacity
Plain paper Fine paper Recycled paper	Legal (8.5 × 14 inches [216 × 356 mm])	10.5 lb to 34 lb (40 to 127 g/m²) (in the vertical path position) 10.5 to 110 lb (40 to 413 g/m²) (in the straight path position)	In the vertical path position Thickness of stack: under 0.09 inches (2.4 mm) 10.5 lb (40 g/m²): 20 sheets[1] 21 lb (80 g/m²): 20 sheets 24 lb (90 g/m²): 18 sheets 28 lb (104 g/m²): 15 sheets 34 lb (127 g/m²): 12 sheets 1 sheet (in the straight path position) Loading capacity varies depending on the paper type.
	Letter (8.5 × 11 inches [216 × 279 mm])		
	A4 (8.3 × 11.7 inches [210 × 297 mm])		
	B5 (7.2 × 10.1 inches [182 × 257 mm])		
	A5 (5.8 × 8.2 inches [148 × 210 mm])		
	B6 (5 × 7.2 inches [128 × 182 mm])		
	A6 (4.1 × 5.8 inches [105 × 148 mm])	10.5 to 55 lb (40 to 209 g/m²) (in the vertical path position) 10.5 to 110 lb (40 to 413 g/m²) (in the straight path position)	
	A8 (2.1 × 2.9 inches [52 × 74 mm])		

Paper type	Paper size	Paper weight	Loading capacity
Long paper	Width: up to 8.5 inches (215.9 mm) Length: 15.5 to 220 inches (393.7 to 5588 mm)	13 to 35 lb (50 to 130 g/m²)	1 sheet
Paper business cards	2.1 × 3.4 inches (55 × 89 mm)	Up to 56 lb (210 g/m²)	Vertical path position: 5 cards Thickness of stack: under 0.09 inches (2.4 mm) Straight path position: 1 card
Receipts	Width: 2 to 8.5 inches (50.8 to 215.9 mm) Length: 2 to 120 inches (50.8 to 3048 mm)	53 to 77 g/m²	Vertical path position: Thickness of stack: under 0.09 inches (2.4 mm) Straight path position: 1 receipt

Note: Long paper means originals longer than 15.5 inches (393.7 mm). The scanning speed is slower when scanning long paper.

[1] For thin originals, extending the input and output tray paper supports is recommended

Warning: Do not load the following types of originals directly in the scanner, or they may be damaged or may damage the scanner:

- Photos
- Booklets or passports that are thicker than 0.19 inches (5 mm) when closed
- Fabric or other non-paper originals
- Originals containing staples or paper clips
- Originals with wet ink or glue
- Ripped originals
- Heavily wrinkled or curled originals

- Transparencies
- Originals with carbon paper backing
- Originals with attached sticky notes

You can scan ripped, wrinkled, or curled originals using a carrier sheet (not included).

Do not feed valuable artwork or important documents into the scanner directly. Misfeeding may wrinkle or damage the original. When scanning these types of originals, use an optional carrier sheet.

For thick passports and passports with a slightly expanded binding edge, use a passport carrier sheet.

Caution: Be careful when loading the following types of originals, or they may be damaged or may not scan successfully:

- Originals with uneven surfaces, such as embossed documents or letterhead
- Coated paper
- Glossy originals
- Thermal paper
- Ripped, curled, or wrinkled originals
- Originals with tears or fold lines
- Perforated originals
- Originals with labels or stickers
- Carbon-less paper
- Originals that have just been printed

Warning: Carbon-less paper contains chemical substances that may damage the rollers inside the scanner. Make sure you clean the pickup roller and the separation rollers regularly. Scanning carbon-less paper may reduce the service life of the rollers compared with scanning plain paper.

Note: When attempting to scan these types of originals, note the following:

- When scanning wrinkled originals, smooth out the wrinkles before loading if possible.
- Use the optional carrier sheet to scan originals that are delicate or wrinkled.
- If originals are incorrectly detected as double feeds, set the **DFDS Function** to **Off** on the control panel, or select **Off** as the **Detect Double Feed** setting in Epson Scan 2.
- Labels or stickers must be firmly adhered to the scanned original with no exposed glue.

- When scanning an original with labels or stickers that look like they might come off easily, use a carrier sheet (not included) and scan the original in the straight path position.
- Try to flatten curled originals as much as possible.
- For originals with folds, flatten the original so that the height of the fold is 0.2 inches (5 mm) or less before loading.

Parent topic: Loading Multiple Sizes of Originals in the Input Tray

Loading Plastic and Laminated Cards in the Input Tray

You can load plastic and laminated cards that meet the card specifications in the input tray.

1. Make sure the straight path position icon is displayed.

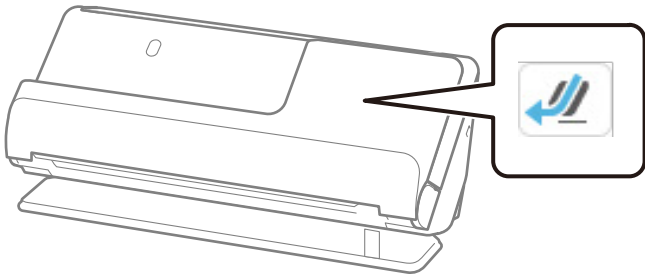

Note: If the vertical path position icon is displayed, pull the position selector to the right and tilt the scanner backwards.

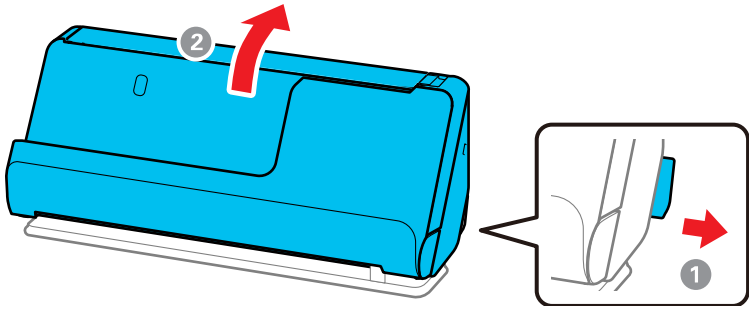

2. Open the input tray.

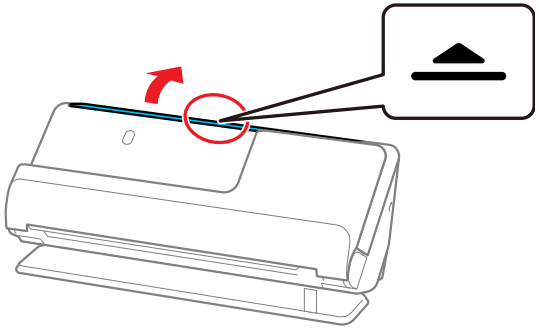

3. Raise the input tray extension.

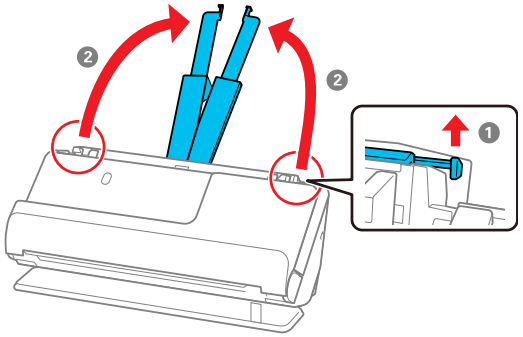

4. Slide the input tray edge guides all the way out.

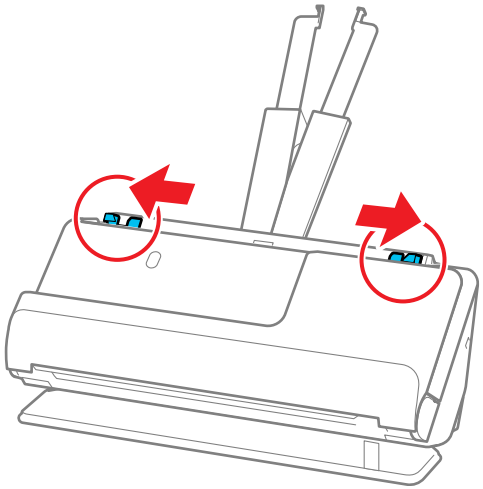

5. Load plastic or laminated cards (printed side up and long edge first) into the input tray horizontally, and slide them in until they meet resistance.

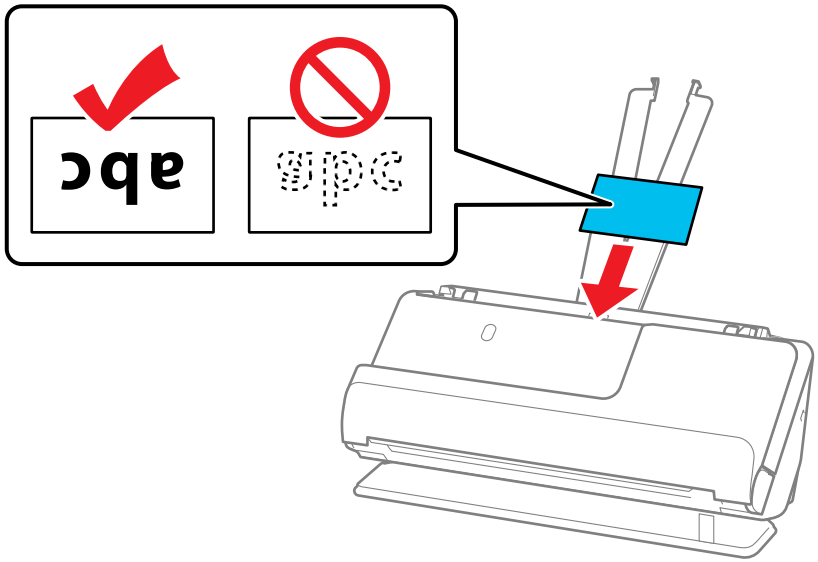

Note: Do not load plastic cards vertically.

6. Adjust the edge guides to fit the edges of the original so that there are no gaps. Otherwise, the original may skew.

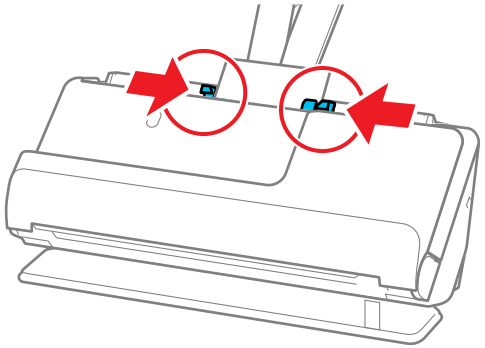

Note: If the edge guides are too loose or too tight, the original may not feed correctly. Align the edge guides so that they lightly touch the edges of the original.

7. Select the card type and turn off the **Detect Double Feed** setting on the Main Settings tab in Epson Scan 2. If you do not disable the **Detect Double Feed** setting and a double feed error occurs, remove the plastic or laminated card from the input tray and reload it.

Note: When using Epson ScanSmart, you can open the Epson Scan 2 screen by clicking the **Settings** button > **Scanner Settings** tab > **Scan Settings**.

Plastic and Laminated Card Specifications

Parent topic: Loading Originals

Related references

Scanner Positions

Related topics

Scanning

Plastic and Laminated Card Specifications

You can load original plastic and laminated cards that meet these specifications in your scanner.

Paper type	Paper size	Paper thickness	Loading capacity
Plastic cards, embossed (ISO 7810 ID-1 compliant)	2.1 × 3.3 inches (54 × 85.6 mm)	0.05 inch (1.24 mm) maximum	1 card (horizontal)
Plastic cards, standard (ISO 7810 ID-1 compliant)		0.03 inch (0.76 mm) to 0.04 inch (1.1 mm)	
		smaller than 0.03 inch (0.76 mm)	
Laminated cards	4.7 × 5.9 inches (120 × 150 mm) or smaller	0.03 inch (0.76 mm) maximum	1 card

Note: Plastic cards with glossy surfaces may not scan properly.

Parent topic: Loading Plastic and Laminated Cards in the Input Tray

Loading Special Originals

You can load thick, folded, or irregularly shaped originals in the input tray using an optional carrier sheet. You can also load envelopes. Make sure the originals meet the specifications for special originals before loading them.

Note: Make sure there is enough space in front of the scanner for the ejected originals.

1. Make sure the straight path position icon is displayed.

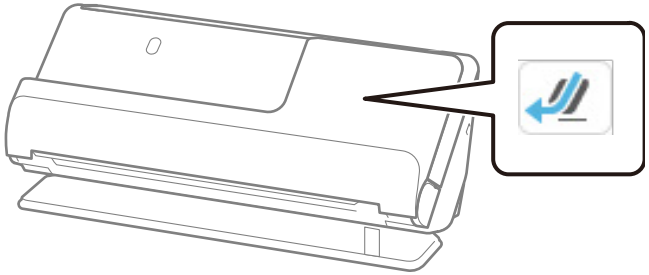

Note: If the vertical path position icon is displayed, pull the position selector to the right and tilt the scanner backwards.

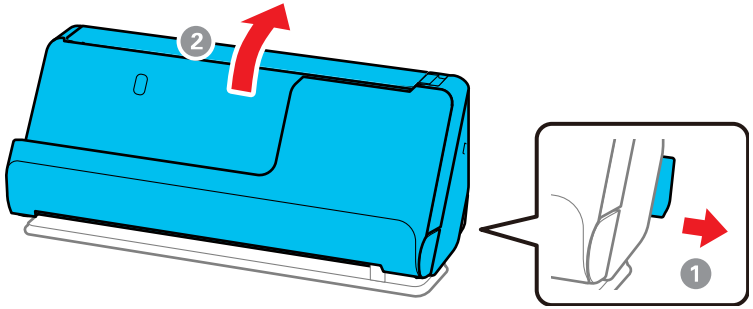

2. Open the input tray.

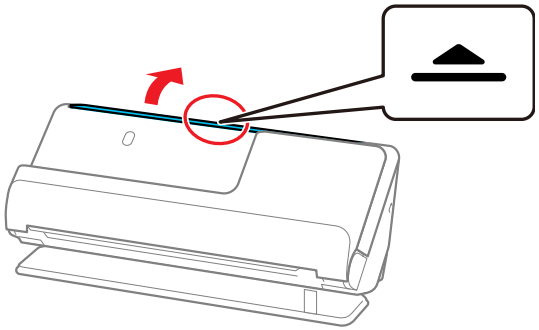

3. Raise the input tray extension.

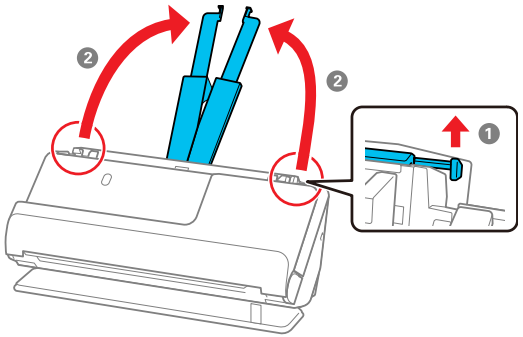

4. Slide the input tray edge guides all the way out.

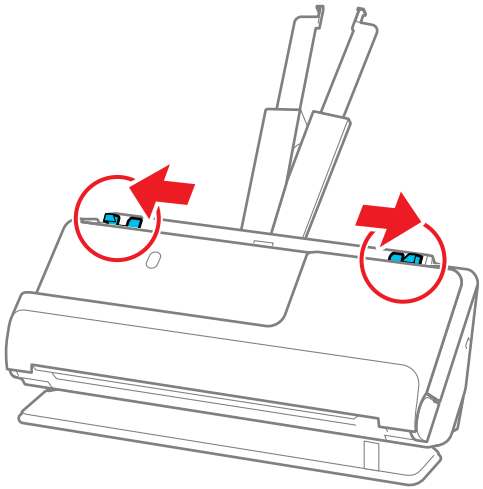

5. Load envelopes vertically in the input tray with the printed side down and the flap facing as shown. Slide in the envelopes until they meet resistance. Skip to step 8.

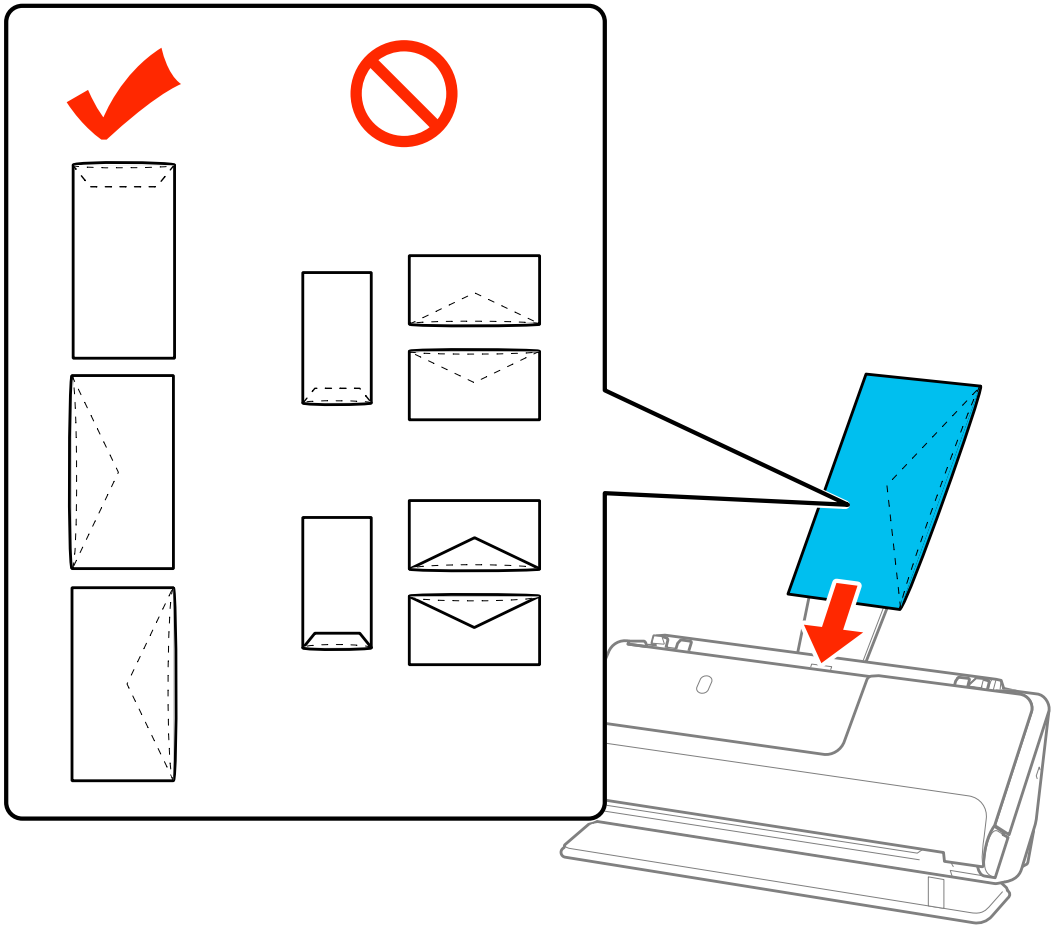

6. Do one of the following to load folded or irregularly shaped originals using a carrier sheet:

   Note: Use only the carrier sheet designed for your product. The carrier sheet is automatically recognized by the product by the two small rectangular holes on the front edge. Keep the holes clean and not covered. Do not load a carrier sheet that has scratches on it or one that has been scanned more than 3,000 times.

   - For a larger original, fold it as shown and place it in the center of an optional carrier sheet. Make sure the illustration on the front edge of the carrier sheet is facing up. To scan both sides and stitch them together, set the appropriate setting in Epson Scan 2.

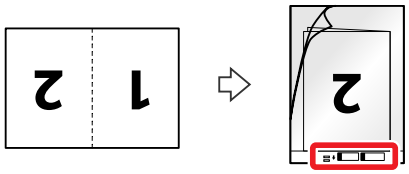

   - For an irregularly shaped original, load it in the center of an optional carrier sheet with the printed side face down. Make sure the illustration on the front edge of the carrier sheet is facing up. If you are loading originals that are 11.7 inches (297 mm) or shorter, place the leading edge of the

original against the binding of the carrier sheet, as shown. Otherwise, the product may not detect the correct length of the original.

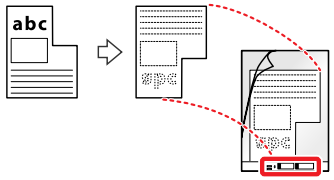

Note: Flip the carrier sheet over before loading it in the input tray.

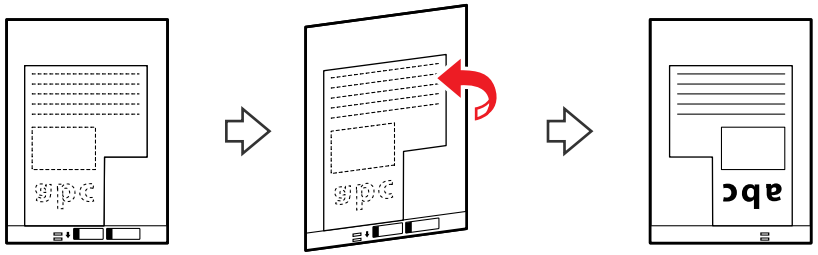

7. Load the carrier sheet in the input tray as shown until it meets resistance.

Folded original

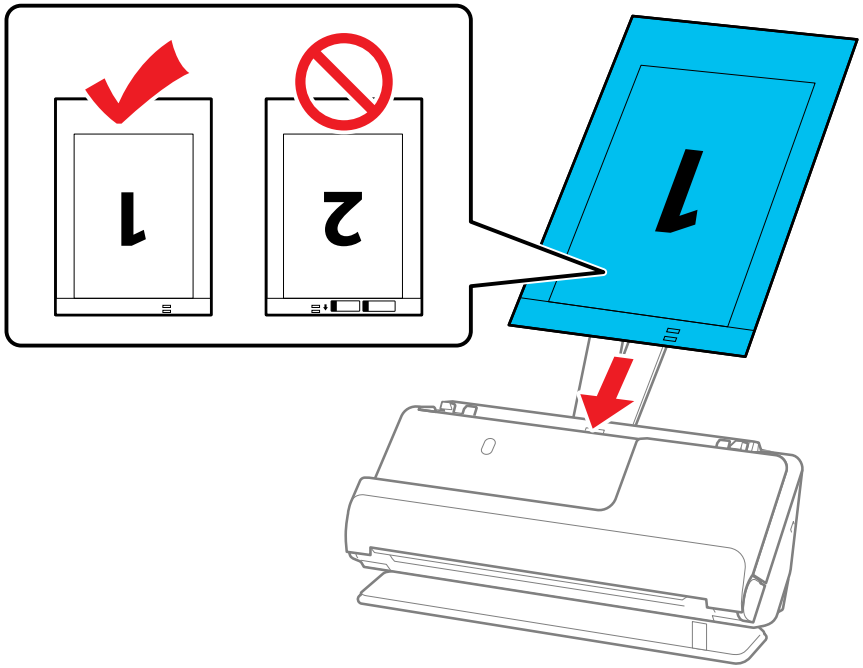

Irregularly shaped original

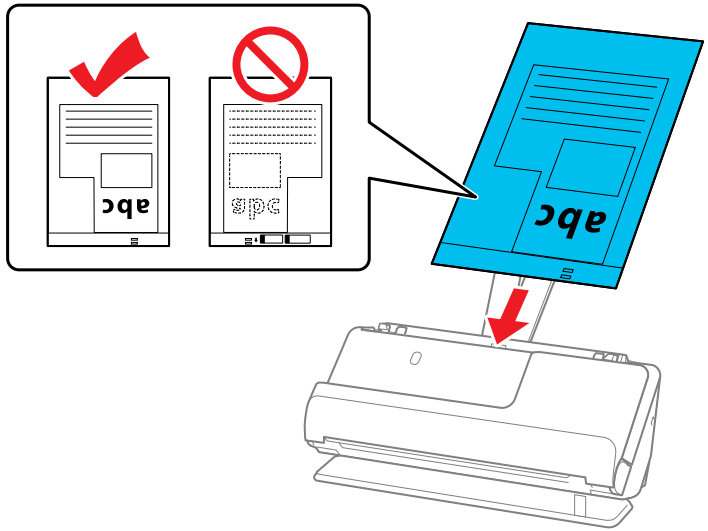

8. Slide the edge guides against the edges of the carrier sheet.

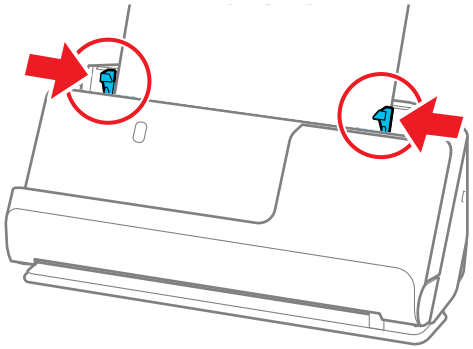

Note: If the edge guides are too loose or too tight, the original may not feed correctly. Align the edge guides so that they lightly touch the edges of the original.

9. Turn off the **Detect Double Feed** setting on the Main Settings tab in Epson Scan 2 when scanning special originals.

   Note: If the **Document Size** setting on the Main Settings tab in Epson Scan 2 is set to **Auto Detect**, **Paper Skew** is automatically selected as the **Correct Document Skew** setting.

   Note: When using Epson ScanSmart, you can open the Epson Scan 2 screen by clicking the **Settings** button > **Scanner Settings** tab > **Scan Settings**.

Special Original Specifications

Parent topic: Loading Originals

Related references

Optional Accessories and Replacement Parts

Scanner Positions

Related topics

Scanning

Special Original Specifications

You can load envelopes, or large, thick, or folded originals that meet these specifications in your scanner.

Paper type	Paper size	Paper thickness	Loading capacity
Large originals (plain paper, fine paper, or recycled paper)	A3 (11.7 × 16.5 inches [297 × 420 mm]) B4 (13.9 × 9.84 inches [353 × 250 mm])	10.5 to 52 lb (40 to 206 g/m²)	1 sheet
Envelopes	4.49 × 6.38 inches (114 × 162 mm) 4.33 × 8.66 inches (110 × 220 mm)	0.015 inch (0.38 mm) maximum	1 envelope

Paper type	Paper size	Paper thickness	Loading capacity
Irregularly shaped originals (load only in a carrier sheet)	Up to this size: A4 (8.3 × 11.7 inches [210 × 297 mm])	0.012 inch (0.3 mm) maximum (excluding the thickness of the carrier sheet)	1 carrier sheet
Originals that cannot be loaded directly into the scanner (such as paper that is wrinkled, torn, stapled, etc.)	Letter (8.5 × 11 inches [216 × 279 mm]) Legal (8.5 × 14 inches [216 × 356 mm])[1] A2 (16.5 × 23.4 inches [420 × 594 mm])[1] A3 (11.7 × 16.5 inches [297 × 420 mm])[1] A4 (8.3 × 11.7 inches [210 × 297 mm]) B4 (13.9 × 9.84 inches [353 × 250 mm])[1] B5 (7.2 × 10.1 inches [182 × 257 mm]) A5 (5.8 × 8.2 inches [148 × 210 mm]) B6 (5 × 7.2 inches [128 × 182 mm]) A6 (4.1 × 5.8 inches [105 × 148 mm]) A8 (2.1 × 2.9 inches [52 × 74 mm]) Custom sizes up to 17 inches (431.8 mm) wide[2] and 11.7 inches (297 mm) long[3]	0.01 inches (0.3 mm) or less (excluding the thickness of the carrier sheet)	1 carrier sheet

[1] Fold in half to load

[2] Originals that are wider than 8.5 inches (215.9 mm) need to be folded in half

[3] The leading edge of the original must be placed at the binding part of the carrier sheet when scanning originals longer than 11.7 inches (297 mm)

Parent topic: Loading Special Originals

Scanning

You can scan your originals and save them as digital files.

Note: For document scanning, use the Epson ScanSmart software. For instructions on scanning with Epson ScanSmart, see the help information in the software.

Starting a Scan

Starting a Scan

After placing your originals on your product for scanning, start scanning using one of these methods.

Note: For instructions on scanning with Epson ScanSmart, see the help information in the application.

Starting a Scan Using the Product Control Panel
Scanning a Document in Epson ScanSmart
Selecting Epson ScanSmart Settings
Starting a Scan from a Scanning Program
Starting a Scan from a Smartphone or Tablet
Scan Resolution Guidelines
Using Mopria Scan
Scanning with AirPrint

Parent topic: Scanning

Starting a Scan Using the Product Control Panel

You can scan an original from the control panel using Epson ScanSmart.

1. Make sure you installed the product software and connected the product to your computer or network.

   Note: Restart your computer after installing the product software to enable scanning from the control panel.

2. Place your original on the product for scanning.
3. Select the home icon, if necessary.

4. Select one of the following options from the home screen:
   - **Computer** lets you scan to a connected computer using your saved scan settings.
   - **USB Drive** lets you save the scanned file directly to a USB device connected to the product.
   - **Cloud** sends your scanned files to a destination that you have registered with Epson Connect.
   - **Email** lets you send scanned files through a pre-defined email server.
   - **Network Folder/FTP** saves your scanned file to a pre-defined folder on a network computer or FTP server. To use this feature, you must first create a shared network folder or obtain the FTP site address, and optionally register the location to your product's contact list.
   - **WSD** lets you manage network scanning in Windows 11, Windows 10, Windows 8.x, or Windows 7. To use this feature on Windows 7, you must first set up a WSD (Web Services for Devices) port on your computer (the port is set up automatically on Windows 11, Windows 10, and Windows 8.x).
5. Follow the instructions in the links below to complete your scan.

Scanning to an External USB Device
Scanning to the Cloud
Scanning to Email
Scanning to a Connected Computer
Control Panel Scanning Options
Setting Up and Scanning to a Network Folder or FTP Server
Creating a Shared Network Folder
Registering Contacts for Email, Network, or FTP Scanning - Control Panel
Registering Contacts for Email, Network, or FTP Scanning - Web Config
Scanning to a Network Folder or FTP Server
Setting Up a WSD Port (Windows 7)
Scanning Using WSD - Windows
Scanning Using Presets

Parent topic: Starting a Scan

Related tasks
Scanning a Document in Epson ScanSmart

Related topics
Loading Originals

Scanning to an External USB Device

You can scan an original and save the scanned image to an external USB device.

1. Place your original on the product for scanning.
2. Select the home icon, if necessary.
3. Insert a USB device into the product's external interface USB port.

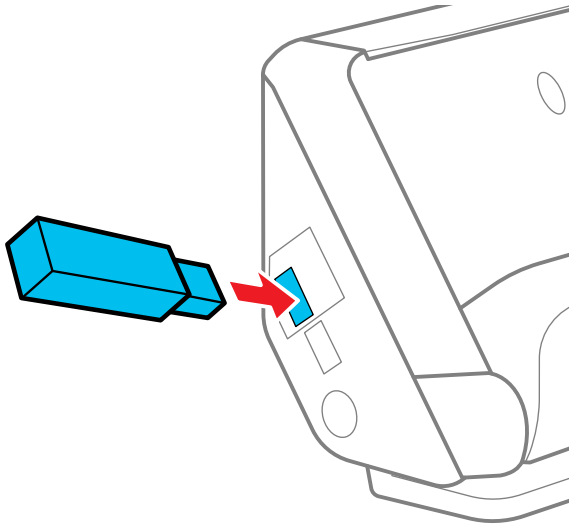

Note: Your USB device must meet the following maximum capacity specification: 2 TB (formatted in FAT, FAT32, or exFAT). Devices with security settings (such as password or encryption), or those requiring a dedicated driver cannot be used.

4. Select **USB Drive**.
5. Change any of the displayed settings on the **Scan** tab as necessary.
6. Select the **Advanced Settings** tab to view and change additional scan settings, if necessary.
7. Tap the icon and check the product's settings or make changes, if necessary.

Note: Tap the ★ presets icon if you want to save your settings as a preset.

8. Select the **Scan** tab again, then tap the start icon to start scanning.

   Your product scans your original and saves the scanned file to the external USB device.

9. After you finish working with the USB device, pull it out of the external interface USB port.

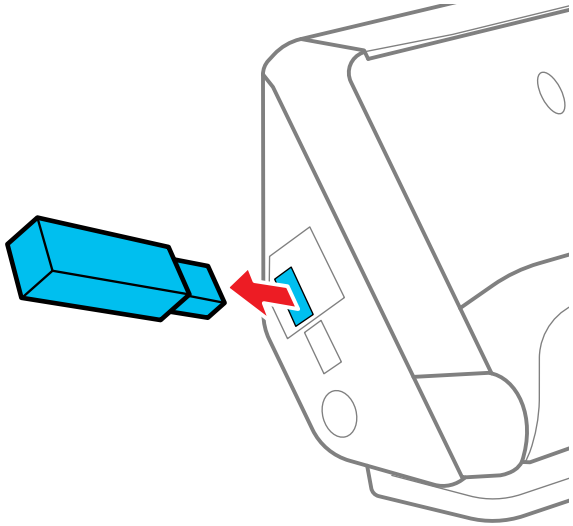

Caution: Check the messages on the LCD screen to make sure the data transfer is complete before removing the USB device. Do not remove the external USB device while data transfer is in progress; otherwise the data on the external USB device may be lost or corrupted.

Parent topic: Starting a Scan Using the Product Control Panel

Related tasks

Scanning Using Presets

Related topics

Loading Originals

Scanning to the Cloud

You can use the control panel to send your scanned files to a destination that you have registered with Epson Connect.

Note: Make sure to set up your product using Epson Connect before using this feature.

1. Place your original on the product for scanning.
2. Select the home icon, if necessary.
3. Select **Cloud**.

   Note: You must register your product with Epson Connect to select a destination.

4. Tap the icon at the top of the screen to select a destination.
5. Change any of the displayed settings on the **Scan** tab as necessary.
6. Select the **Advanced Settings** tab to view and change additional scan settings, if necessary.
7. Tap the icon and check the product's settings or make changes, if necessary.

   Note: Tap the presets icon if you want to save your settings as a preset.

8. Select the **Scan** tab again, then tap the start icon to start scanning.

   Your product scans your original and saves the scanned file to the selected destination.

Parent topic: Starting a Scan Using the Product Control Panel

Related tasks

Scanning a Document in Epson ScanSmart

Scanning Using Presets

Setting Up Epson Connect Services

Related topics

Loading Originals

Scanning to Email

You can scan an original and email the scanned file using your product's control panel. You need to have a preconfigured email server before you can scan to email. You can enter email addresses directly on the product's control panel or select them from the **Contacts** list. Make sure the **Date/Time** and **Time Difference** settings are correct so the time stamps on your emails are accurate.

1. Place your original on the product for scanning.
2. Select the home icon, if necessary.

3. Select **Email**.
4. Select a destination on the **Recipient** tab.
5. Do one of the following:
   - To enter the email address directly, select **Keyboard**, enter an email address, and select **OK**.
   - To select a contact from the Contacts list, select **Contacts**, select a contact or group, and then select **Done**. You can tap the icon to create a new contact, or search for a contact in the Contacts list. Enter the search keyword into the box at the top of the screen.
   - To select a recently used contact, select **History**, select a contact, and then select **Done**.

     Note: The number of recipients you selected is displayed on the right side of the screen. You can send emails to up to 10 contacts and groups. If groups are included in the Contacts list, you can select up to 200 individual addresses in total, taking addresses within the groups into account. Select the address box at the top of the screen to display the list of selected addresses.
6. Select **Scan Settings** and select the desired settings.
7. Tap the icon and check the product's settings or make changes, if necessary.
8. Select the **Recipient** tab again, then tap the start icon to start scanning.

   Note: Tap the icon to save your scan settings as a preset. Presets can be locked by an administrator.

   Your product scans your original and sends the scanned file to the recipient's email address.

Parent topic: Starting a Scan Using the Product Control Panel

Related tasks

Scanning a Document in Epson ScanSmart
Entering Characters on the LCD Screen
Registering Contacts for Email, Network, or FTP Scanning - Control Panel
Registering Contacts for Email, Network, or FTP Scanning - Web Config
Scanning Using Presets
Selecting the Date and Time

Related topics

Loading Originals

Scanning to a Connected Computer

You can scan an original from the control panel using Epson ScanSmart.

1. Make sure you installed the product software and connected the product to your computer or network.

   Note: Restart your computer after installing the product software to enable scanning from the control panel.

2. Place your original on the product for scanning.
3. Select the home icon, if necessary.
4. Select **Computer**.
5. If you want to change the scan settings, tap the icon and select from the following options:
   - To stop scanning when a double feed is detected, select **Double Feed Stop Timing** and select a timing option.
   - To stop scanning when an original containing staples is detected, select **Paper Protection** and select the setting you want to use.

     Note: Turning this function on will not always prevent damage to your originals.

   - To detect dirt on the glass surface inside the product, select **Glass Dirt Detection** and select the setting you want to use.
6. Select the icon to view the job settings.

   Note: Select the presets icon to save your settings as a preset.

7. Select the start icon to start scanning.

   Epson ScanSmart opens and your product scans the original and sends the scanned file to the connected computer.

Parent topic: Starting a Scan Using the Product Control Panel

Related tasks

Scanning Using Presets

Scanning to the Cloud

Entering Characters on the LCD Screen

Related topics

Loading Originals

Control Panel Scanning Options

Select the options you want to use for scanning.

Note: Not all options or settings may be available, depending on the **Scan to** option selected.

Option	Available settings	Description
Image Type	**Color/Grayscale/B&W**	Select to scan images in 24-bit color, 8-bit gray, or monochrome; adjust the sensitivity to determine whether the original is grayscale or monochrome when scanning a non-color original
	Color/Black & White	Select to scan images in 24-bit color or monochrome
	Color/Grayscale	Select to scan images in 24-bit color or 8-bit gray
File Format	**PDF (Single Page)**	Select whether to save all originals as one file (multi-page) or save each original separately (single page) You can also select the **Compression Ratio** and **PDF Settings**.
	PDF (Multi Page)	
	PDF/A (Single Page)	
	PDF/A (Multi Page)	
	TIFF (Single Page)	Select for scanned files that you can print from a device. Multi Page TIFF documents are scanned in black and white.
	TIFF (Multi Page)	
Scanning Side	**Binding(Original)**	Select the binding direction of the original
	Double-Sided	Select when scanning 2-sided originals
Resolution	**200dpi**	Select if the scanned image will be displayed on the screen or emailed
	300dpi	Select when using Optical Character Recognition (OCR) or creating a text searchable PDF
	600dpi	Select when printing using a printer or sending by fax

Option	Available settings	Description
Original Size	**Crop Margins for Size "Auto"**	Adjust the cropping area when selecting **Auto Detect**
	Scan laminated card	Select when scanning laminated originals; transparent areas around the edges are also scanned
Text Enhancement	**Emphasize light letters / Remove background**	Select to set the level of correction between text and background
	Remove spot noise	Select to remove black dots in the background of the original that cannot be removed by lightening the background
Rotation	Varying degrees	Select the rotation angle depending on the original you want to scan
Density	Varying levels	Adjust the lightness or darkness of scanned images
Remove Background	Varying levels	Select the darkness of the background
Remove Shadow	**Off**	Erase the shadows that appear in the center of a document when scanning a book (**Center**) or the shadows that appear around a document when scanning thick paper (**Frame**)
	On	
Correct Document Skew	**Off**	Correct skew in the scanned image
	On	
Skip Blank Pages	**Off**	Select to skip blank pages when scanning; if the result is not what you expected, adjust detection level **Note:** Some pages may be incorrectly detected as blank pages. This feature is not available when scanning double-sided originals that are stitched.
	On	

Option	Available settings	Description
Automatic Feeding Mode	**On (Full-Auto)**	Select to start scanning originals automatically when they are loaded in the ADF; you can scan originals continuously by adding documents in the ADF.
	On (Semi-Auto)	Select to start scanning the first original automatically when it is loaded in the ADF; click the **Start Scanning** button to scan the next original.
Detect Double Feed	Various sizes	Select **Length** to detect a double feed by the length; when the length of the next original scanned is different from the first, a double feed is detected
File Name	—	Enter a prefix for the name of the images, and add the date and time to the file name for your scanned file
Clear All Settings	—	Restore scan settings to their factory default

Parent topic: Starting a Scan Using the Product Control Panel

Setting Up and Scanning to a Network Folder or FTP Server

Before you can scan to a network folder on your computer or on an FTP server, you need to create a shared folder and optionally register its location to your product's Contacts list. Select the links below as necessary to create and register the folder, and to scan to it over the network.

Parent topic: Starting a Scan Using the Product Control Panel

Related tasks

Creating a Shared Network Folder

Registering Contacts for Email, Network, or FTP Scanning - Control Panel

Registering Contacts for Email, Network, or FTP Scanning - Web Config

Scanning to a Network Folder or FTP Server

Creating a Shared Network Folder

You can create a shared network folder on your computer or an FTP site and register its location to your product's Contacts list.

Note: If you are creating a shared network folder on a Mac, see your Mac documentation for instructions on creating the folder. The instructions here are for Windows.

First make sure you connected your product and computer to the same network.

Note: If you are running a Home version of the Windows operating system, you cannot create a shared folder on your Windows desktop or in the Documents or Pictures folder unless you have created a Home Group Configuration for sharing. You can, however, create a shared folder in the root of the C: drive on your system.

If you want to scan to a folder on an FTP server, contact the FTP server administrator for the server address and authentication access to a shared folder on the server.

1. If you are scanning to a network folder on your computer, do one of the following to check the format of your computer name:
   - **Windows 11, Windows 10, or Windows 8.x**: Hold down the Windows key on your keyboard and press the **X** key. Select **System** from the list that appears. Check the Computer Name or Device Name listed for your computer on the System window.
   - **Windows 7**: Click , right-click **Computer**, and select **Properties**. Check the Computer Name listed for your computer on the System window.

   Note: The settings in these steps may vary, depending on your version of Windows. See Windows Help for details on your operating system.

2. If the computer's name uses any characters that are not alphanumeric (letters or numbers), do one of the following to change the computer's name:
   - **Windows 11, Windows 10, or Windows 8.x**: Select **Rename this PC** and follow the on-screen prompts.
   - **Windows 7**: Select **Change Settings**, change the computer's name, and click **OK**. (See Windows Help for instructions, if necessary.)

   Note: You need to be logged into Windows as an administrator to change the computer's name. After changing the name, restart your computer.

3. Click the Windows start button, then select **Windows System** > **Control Panel**.
4. On the Control Panel, click **Network and Internet** > **Network and Sharing Center** > **Change advanced sharing settings**.

The network profile is displayed.

Make sure that **Turn on file and printer sharing** is selected under File and Printer Sharing for the network profile (current profile). If already selected, click **Cancel** to close the window.

5. Start File Explorer or Windows Explorer.
6. Create a folder on the Windows desktop with a folder name of 12 characters or less; otherwise, your product may not be able to access the folder.

   Note: You need to be logged into Windows as an administrator to access the desktop folder and the document folder under each User folder.

7. Right-click the folder you created and select **Properties**.
8. On the **General** tab, deselect the **Read-only** checkbox to allow users to access the folder over the network.
9. Select the **Sharing** tab and click the **Advanced Sharing** button.

   Note: You need to be logged into Windows as an administrator to select the **Advanced Sharing** button.

10. On the Advanced Sharing screen, select the **Share this folder** checkbox.
11. Click the **Permissions** button and select the following on the Share Permissions tab:
    - Select **Everyone** under Group or user names.
    - Select the checkbox in the **Allow** column for the **Change** setting.
12. Click **OK** to save the settings, then click **OK** again to close the Advanced Sharing window.
13. Select the **Security** tab and check that the Group or user names list at the top includes the current computer user and the administrators who can now access the folder.
14. Select the **Sharing** tab again and write down the **Network Path** listed under Network File and Folder Sharing at the top. This is the path you will register to your product's Contacts list so you can select it for network scanning.
15. Click **OK** or **Close**.

Now you can register the folder path to your product's Contacts list.

Parent topic: Starting a Scan Using the Product Control Panel

Related tasks

Scanning a Document in Epson ScanSmart

Entering Characters on the LCD Screen
Registering Contacts for Email, Network, or FTP Scanning - Control Panel
Registering Contacts for Email, Network, or FTP Scanning - Web Config
Scanning to a Network Folder or FTP Server

Registering Contacts for Email, Network, or FTP Scanning - Control Panel

You can register a list of contacts for scanning to email or to a network folder or FTP server.

1. Select the home icon, if necessary.
2. Select **Settings**.
3. Select **Contacts Manager**. Enter the administrator password, if necessary.
4. Select **Register/Delete**.
5. Select **Add Entry**.
6. Select **Add Contact**.
7. Do one of the following:
   - To create a contact for scanning to email, select **Email**.
   - To create a location for scanning to a network folder or FTP, select **Network Folder/FTP**.
8. Select the **Registry Number** you want to use for the contact you are adding.
9. Select the **Name** field, use the displayed keyboard to enter the contact name (up to 30 characters), and select **OK**.
10. Select the **Index Word** field, use the displayed keyboard to enter a word to use when searching for an entry (up to 30 characters), and select **OK**. (This field is optional.)
11. Do the following as necessary for your contact:
    - If you want to identify the contact as a frequently used address, select the **Assign to Frequent Use** field and select **On**. This makes it quicker to select the contact when you scan.
    - For an email contact, select the **Email Address (Required)** field, use the displayed keyboard to enter the address, and press **OK**.
    - For a network folder or FTP location, select the **Communication Mode** field and select **Network Folder (SMB)** or **FTP**. Then select the **Location (Required)** field, use the displayed keyboard to enter the network path to the shared folder, and select **OK**.

      Enter the folder path name for the **Location** setting in one of the following formats depending on the **Communication Mode** setting you selected:

      - **Network Folder (SMB)**: \\host name\folder name

- **FTP**: ftp://host name/folder name
- **FTPS**: ftps://host name/folder name
- **WebDAV (HTTPS)**: https://host name/folder name
- **WebDAV (HTTP)**: http://host name/folder name

- For a network folder or FTP location with a password, select the **User Name** field and use the displayed keyboard to enter the user name. Then select the **Password** field and enter the password.
- For an FTP location, enter the FTP server port number in the **Port Number** field. If there is a firewall between the product and FTP server, select the **Connection Mode** field and select **Passive Mode**.

12. Select **OK**.

Parent topic: Starting a Scan Using the Product Control Panel

Related tasks

Registering Contacts for Email, Network, or FTP Scanning - Web Config

Registering Contacts for Email, Network, or FTP Scanning - Web Config

You can register a list of contacts for scanning to email or to a network folder or FTP server using Web Config and your computer's internet browser.

Before you begin, make a note of the IP address or host name of the scanner so you can enter it in these steps. Select **Settings** > **Network Settings** > **Network Status** on the product's control panel, and select **Wi-Fi Status** or **Wi-Fi Direct Status** to confirm the product's IP address.

1. Launch an internet browser on a computer that is using the same network as your product.
2. Type your product's IP address into the address bar and press **Enter**.
3. You may see a warning displayed in your browser when you start Web Config; this is not a problem. Depending on your browser, select the option to view the web page anyway.
4. In the upper right corner of the screen, click **Log in** and enter the Administrator password.

   Note: If this is your first time logging in, use the following default values:

   - **User name**: none (blank)
   - **Password**: If there is a "PASSWORD" label attached to the back of your product, enter the 8-digit number shown on the label. If there is no "PASSWORD" label, enter the serial number shown on the label attached to your product.

5. Click **OK**.
6. Click on the **Scan** tab, then click **Contacts**.
7. Select the number you want to use for the contact you are adding and click **Edit**.
8. Do one of the following:
   - To create a contact for scanning to email, select **Email** as the **Type** setting.
   - To create a location for scanning to a network folder or FTP, select **Network Folder (SMB)** or **FTP** as the **Type** setting.
9. Enter the following information as necessary for your contact:
   - **Name**: The name to display in your product's contact list.
   - **Index Word**: Enter a word to identify this entry when searching for it (up to 30 characters). This field is optional.
   - **Assign to Frequent Use**: If you want to identify the contact as a frequently used address, select **On**. This makes it quicker to select the contact when you scan.
   - **Email Address**: For an email contact, the contact's email address.
   - **Save to**: For a network folder or FTP location, the network path to the shared folder.

     Enter the folder path name in one of the following formats depending on the **Type** setting you selected:
     - **Network Folder (SMB)**: \\host name\folder name
     - **FTP**: ftp://host name/folder name
     - **FTPS**: ftps://host name/folder name
     - **WebDAV (HTTPS)**: https://host name/folder name
     - **WebDAV (HTTP)**: http://host name/folder name
   - **User Name** and **Password**: Enter only if you have set up a password on your computer.
   - **Connection Mode**: For FTP locations, select **Passive Mode** if there is a firewall between the product and FTP server.
   - **Port Number**: For FTP locations, enter the port number.
   - **Proxy Server Settings**: Select whether or not to use a proxy server.
10. Click **Apply**.

    After a moment, you see a message telling you that contact registration is complete.
11. Close your web browser.

Parent topic: Starting a Scan Using the Product Control Panel

Related tasks

Determining the Product's IP Address

Accessing the Web Config Utility

Scanning to a Network Folder or FTP Server

You can scan an image and save it to a network folder on your computer or on an FTP server using your product's control panel. You can either enter the folder path directly on the product's control panel or select a folder from the Contacts list.

Note: Before scanning, make sure you create a network folder or FTP server, and check that the **Date/Time** and **Time Difference** settings are correct.

1. Place your original on the product for scanning.
2. Select the home icon, if necessary.
3. Select **Network Folder/FTP**.
4. On the **Destination** tab, do one of the following to enter a folder location:
   - To select frequently used addresses, tap the icons displayed on the screen.
   - To enter the folder path directly, select **Keyboard** > **Communication Mode**, and enter the folder path in the **Location (Required)** field. Select other options, as necessary.
   - To select a contact from the Contacts list, select **Contacts**, select a contact, and then select **Done**. You can tap the icon to create a new contact, or search for a folder from the Contacts list. Enter the search keyword into the box at the top of the screen.
5. Select the **Scan Settings** tab, and select the desired settings.
6. Tap the icon and check the product's settings or make changes, if necessary.

   Note: Tap the presets icon if you want to save your settings as a preset.

7. Select the **Destination** tab again, then tap the start icon to start scanning.

   Your product scans your original and saves the scanned file in the destination network folder.

Parent topic: Starting a Scan Using the Product Control Panel

Related tasks

Registering Contacts for Email, Network, or FTP Scanning - Control Panel

Registering Contacts for Email, Network, or FTP Scanning - Web Config

Selecting the Date and Time

Creating a Shared Network Folder

Setting Up a WSD Port (Windows 7)

You can scan to a networked Windows computer using WSD (Web Services for Devices). You must first set up a WSD port on your Windows 7 system (the port is set up automatically on Windows 11, Windows 10, and Windows 8.x).

Before you set up a WSD port, make sure you installed your product software, and connected your product and computer to the same network.

1. Turn on your product.
2. Click and select **Computer**.
3. On the left side of the window, select **Network**.
4. Locate your product on the Network screen, right-click it, and select **Install**.
5. When you see the User Account Control screen, click **Continue**.

   Note: If you see an Uninstall screen, click **Uninstall** and repeat these steps as necessary.

6. When you see the message **Your device is ready to use** in the Windows taskbar, click the message.
7. On the Driver Software Installation screen, make sure your product is listed as **Ready to use**. Then click **Close**.
8. Click and select **Devices and Printers**.
9. Make sure that an icon appears for your product's name on the network.

When you use WSD, select your product name to scan over the network.

Parent topic: Starting a Scan Using the Product Control Panel

Scanning Using WSD - Windows

You can scan originals to a computer from the product control panel using WSD (Web Services for Devices) for network scanning in Windows.

Note: To use this feature on Windows 7, you must first set up WSD on the computer. See Windows help for instructions.

1. Make sure you installed the product software and connected the product to your computer or network.
2. Place your original on the product for scanning.
3. Select the home icon, if necessary.
4. Select **WSD**.
5. Select a computer.
6. Select the start icon to start scanning.
7. When the WSD Scan Device screen is displayed on your computer, follow the on-screen instructions.

Parent topic: Starting a Scan Using the Product Control Panel

Related tasks

Setting Up a WSD Port (Windows 7)

Scanning Using Presets

You can select a registered preset and use it to scan images.

1. Select the home icon, if necessary.
2. Do one of the following:
   - Select the presets icon on the home screen, and select a registered preset from the list.
   - Select the presets icon on the Scan menu, select **Load Presets**, and then select a registered preset from the list.
   - If you added the preset icon to the home screen, select the icon.
3. If you see a loading confirmation screen, select **Close**.

   Note: If you enabled the **Quick Send** setting for the selected preset, loading is skipped and scanning starts immediately.

4. Verify the settings for the selected preset and select the start icon to start scanning.

Parent topic: Starting a Scan Using the Product Control Panel

Related tasks

Registering Presets

Scanning a Document in Epson ScanSmart

You can scan and review documents in Epson ScanSmart. See the Epson ScanSmart help for details on how to use the application.

Note: The images show Windows screens; Mac screens may be slightly different. Depending on your product model and software version, not all options may be available.

1. Load your original into the scanner.
2. Start the scan by doing one of the following:
   - Press the start button on the scanner. Epson ScanSmart automatically opens on your computer and the scan job begins.

     Note: You can change the scanning button default in the **Settings** menu.

   - Open Epson ScanSmart on your computer. Do one of the following:
     - **Windows 11:** Click , then search for **Epson ScanSmart** and select it.
     - **Windows 10:** Click > **Epson Software** > **Epson ScanSmart**.
     - **Windows 8.x**: Navigate to the **Apps** screen and select **Epson ScanSmart**.
     - **Windows 7**: Click , and select **All Programs**. Select **Epson Software** > **Epson ScanSmart**.
     - **Mac:** Open the **Applications** folder, open the **Epson Software** folder, and select **Epson ScanSmart**.

You see a screen like this:

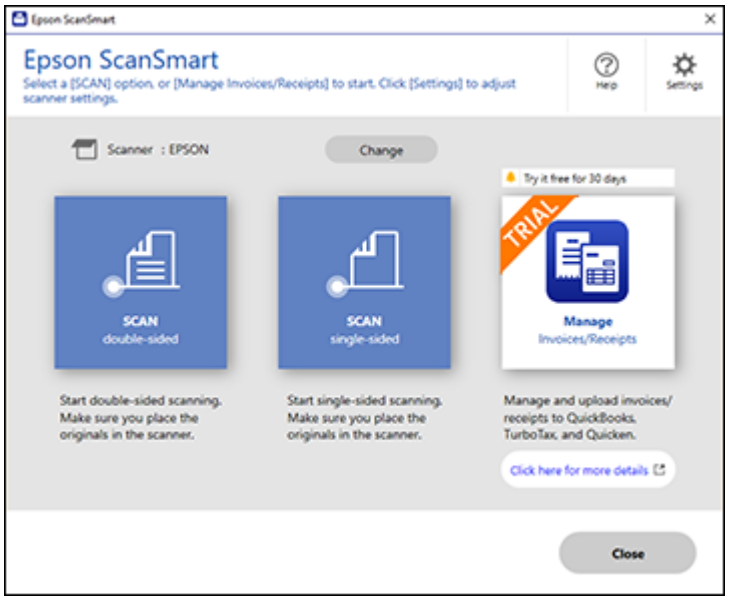

3. Select a scan option.

   The scan job begins and your original feeds through the scanner. When scanning is complete, you see a screen like this:

4. You can review, edit, or reorder the scanned images as follows:
   - Select **Scan** to scan more originals.
   - Select **Delete** to delete selected scanned images.
   - Select **Rotate Right** to rotate each scanned image.
   - Select **Crop** to crop the selected image.
   - Select **Stitch Images** to combine two selected images into one image. (You must select two images for the Stitch Images button to become active.)
   - If you scanned double-sided, select **On** or **Off** for **Include back sides** if you want to keep or discard the back sides of scanned images.
   - Select **Skip this screen next time** if you do not want to preview images each time.
5. When you are finished reviewing the scanned images, click **Next**.

   You see a screen like this:

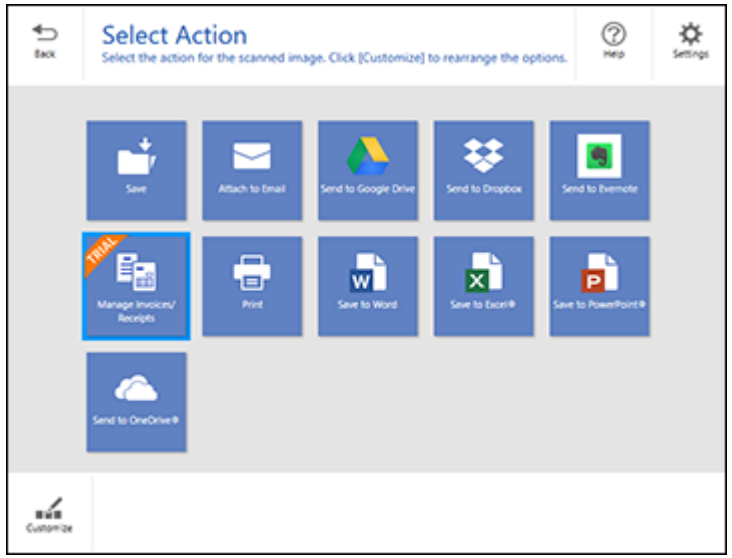

6. Select an option to save, send, or print the scanned images. See the links below.

Saving a Scan
Attaching a Scan to Email

Sending a Scan to a Cloud Service
Printing a Scan
Saving a Scan as a Microsoft Office Format File

Parent topic: Starting a Scan

Saving a Scan

You can save a scanned image to your computer in a variety of formats.

1. Make sure your originals are scanned and reviewed. See the link at the end of this section.
2. In the **Select Action** window, click **Save**.

   You see a screen like this:

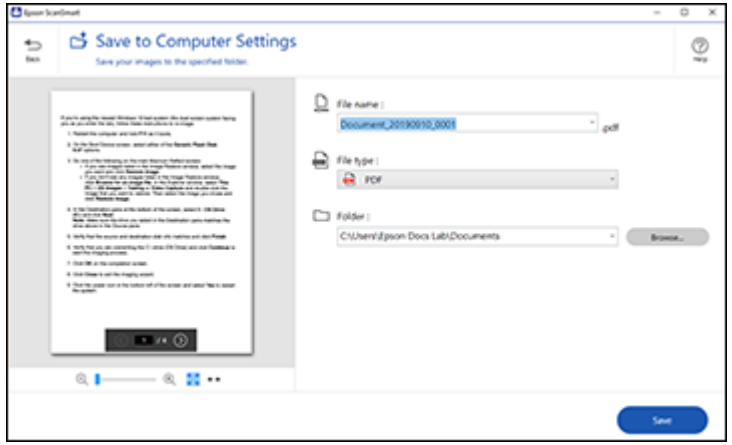

3. Change the settings as follows:
   - The document type and scan date for the file name are automatically detected. You can change them as necessary.
   - You can save the scanned image in a variety of formats. If you select **Searchable PDF** as the **File type** setting, you can select the OCR (Optical Character Recognition) language.
   - Select the folder on your computer in which to save the file.
4. Click **Save**.

Parent topic: Scanning a Document in Epson ScanSmart

Attaching a Scan to Email

You can attach a scanned image to an email as a file attachment.

Note: Your email app and account settings should be configured before scanning. You must install a MAPI-type email program such as Entourage or Mac Mail. Attach to Email only supports 32-bit MAPI-compatible mail apps. Web-based email services such as Gmail are not supported. If you see an error message, your email app may not be compatible and you will need to save the scans and manually attach the file to an email.

1. Make sure your originals are scanned and reviewed. See the link at the end of this section.
2. In the **Select Action** window, click **Attach to Email**.

   You see a screen like this:

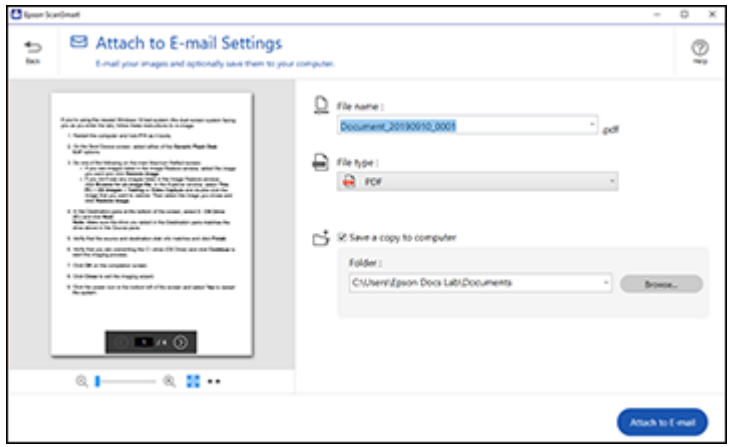

3. Change the settings as follows:
   - The document type and scan date for the file name are automatically detected. You can change them as necessary.
   - You can save the scanned image in a variety of formats. If you select **Searchable PDF** as the **File type** setting, you can select the OCR (Optical Character Recognition) language.
   - If you also want to save a copy of the scanned image to your computer, make sure the checkbox is selected and select the folder on your computer in which to save the file.
4. Click **Attach to E-mail**.

Your email program opens with the file attached to a new email.

Parent topic: Scanning a Document in Epson ScanSmart

Sending a Scan to a Cloud Service

You can upload scanned images to a cloud service. Internet access is required.

1. Make sure your originals are scanned and reviewed. See the link at the end of this section.
2. In the **Select Action** window, click one of the cloud service send options.

   You see a screen like this:

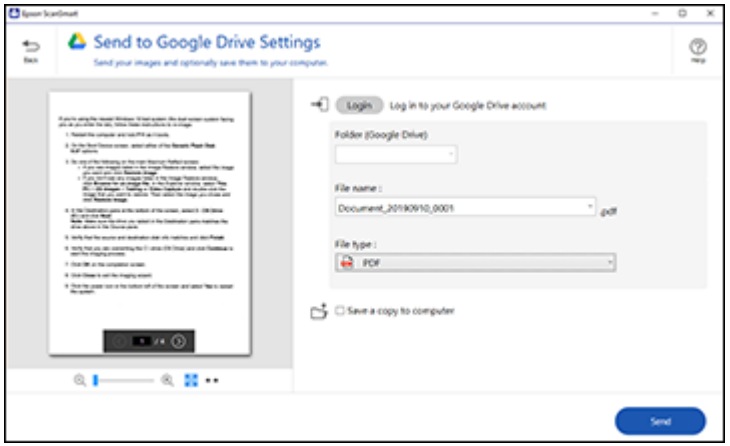

3. Log in to your account.

   Note: You may need to allow Epson ScanSmart access to your account. The first time you log in, you may be prompted to enter an authentication code.

4. Change the settings as follows:
   - Select the folder in your account where you want to send the document. (Documents can be saved to top-level folders only.)
   - The document type and scan date for the file name are automatically detected. You can change them as necessary.
   - You can save the scanned image in a variety of formats. If you select **Searchable PDF** as the **File type** setting, you can select the OCR (Optical Character Recognition) language.

- If you also want to save a copy of the scanned image to your computer, click the checkbox.

5. Click **Send**.

Parent topic: Scanning a Document in Epson ScanSmart

Printing a Scan

You can print your scanned image and save the scanned file to your computer.

1. Make sure your originals are scanned and reviewed. See the link at the end of this section.
2. In the **Select Action** window, click **Print**.

   You see a screen like this:

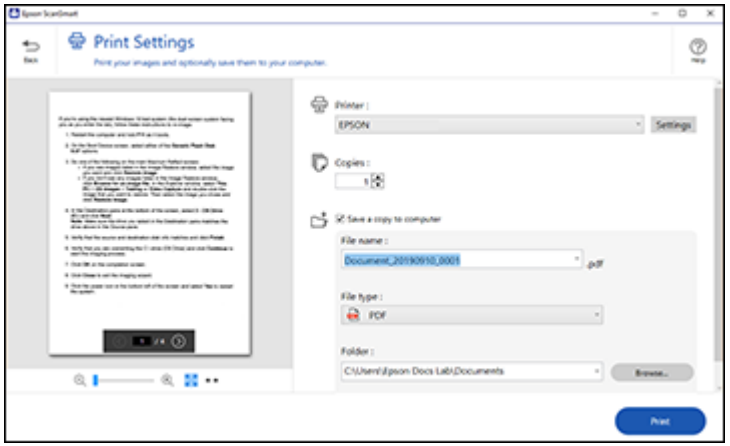

3. Change the settings as follows:
   - Select the Epson printer and change the print settings, if necessary.
   - Select the number of copies you want to print.
   - If you also want to save a copy of the scanned image to your computer, click the checkbox.
   - The document type and scan date for the file name are automatically detected. You can change them as necessary.
   - You can save the scanned image in a variety of formats. If you select **Searchable PDF** as the **File type** setting, you can select the OCR (Optical Character Recognition) language.
   - Select the folder on your computer in which to save the file.

4. Click **Print**.

Parent topic: Scanning a Document in Epson ScanSmart

Saving a Scan as a Microsoft Office Format File

You can save your scans in one of the following editable Microsoft Office file formats: Microsoft Word (.docx), Microsoft Excel (.xlsx), or Microsoft PowerPoint (.pptx).

Note: The **Save to PowerPoint** option is only available for Windows.

1. Make sure your originals are scanned and reviewed. See the link at the end of this section.
2. In the **Select Action** window, click one of the save to options.

   Note: A first-time prompt may appear asking you to download a Microsoft Office plug-in. Click **Yes** and follow any on-screen instructions.

   You see a screen like this:

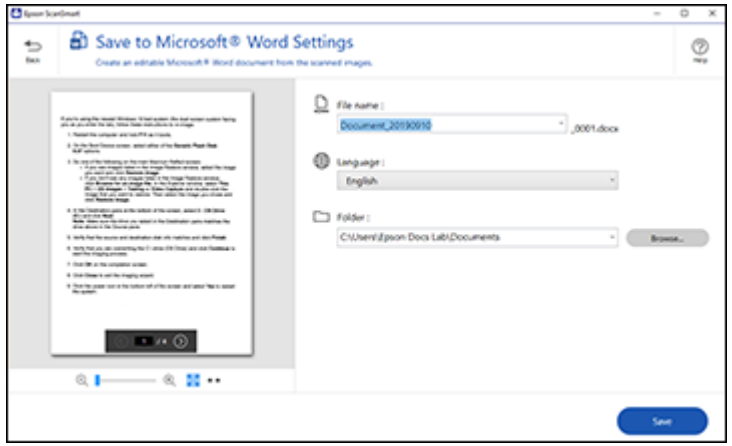

3. Change the settings as follows:
   - The document type and scan date for the file name are automatically detected. You can change them as necessary.
   - Select the OCR language (the default is English).
   - Select the folder on your computer in which to save the file.

4. Click **Save**.

Parent topic: Scanning a Document in Epson ScanSmart

Selecting Epson ScanSmart Settings

After starting Epson ScanSmart, you can change various scanning settings.

Changing the Epson Product
Changing the Scan Settings
Software Settings Required for Special Originals
Changing the File Name Settings
Changing the Save Settings
Save Settings
Customizing Action Icons

Parent topic: Starting a Scan

Changing the Epson Product

If you are using more than one Epson product with Epson ScanSmart, you can change the product that you are using with your computer.

Note: A product connected to your computer via USB takes priority over a product with a Wi-Fi connection.

1. On the main screen, click **Change**.

You see a screen like this:

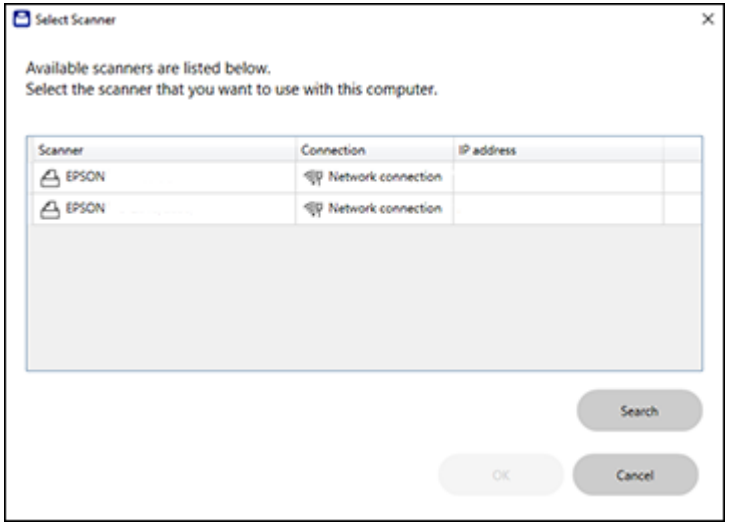

2. Select the Epson product you want to use with your computer and click **OK**.

Parent topic: Selecting Epson ScanSmart Settings

Changing the Scan Settings

You can change detailed scan settings such as the resolution, document size, and more.

1. Click the **Settings** button.

You see a screen like this:

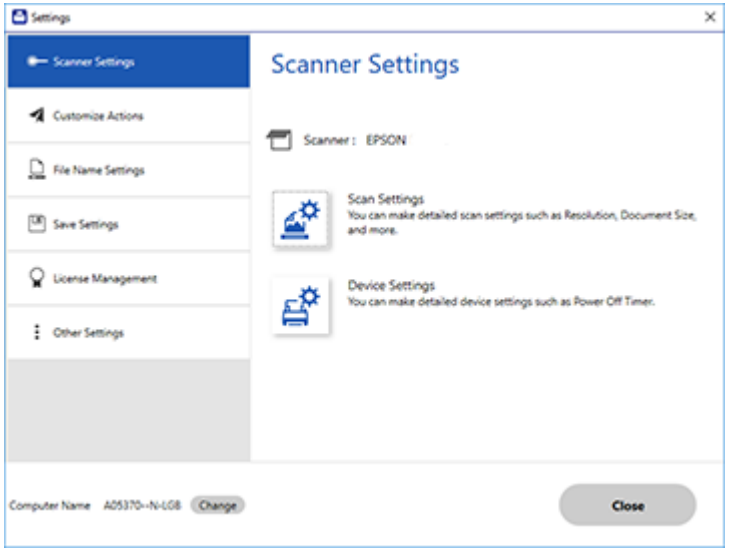

2. On the **Scanner Settings** tab, click **Scan Settings**.

You see a screen like this:

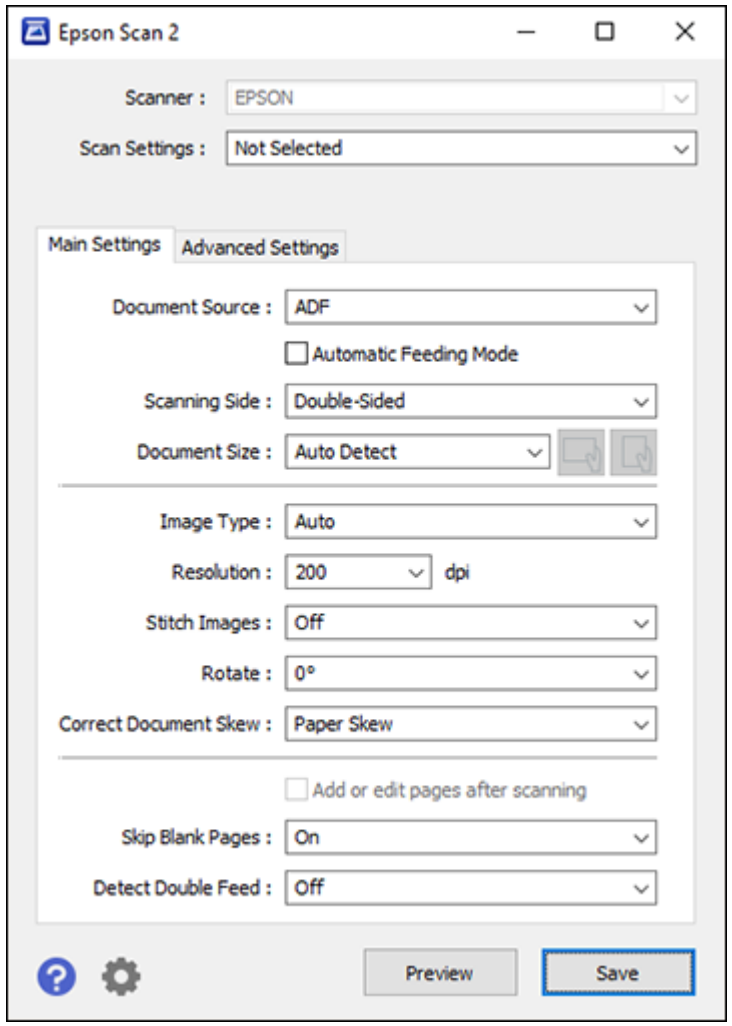

3. Change the settings as necessary and click **Save**.

   Note: Select the **Automatic Feeding Mode** checkbox if you want scanning to start automatically when originals are loaded in the ADF.

You can adjust the image quality of the scanned images using the features on the Advanced Settings tab. For more details on each feature, see the help on the screen displayed.

Note: Some options may not be available depending on other settings you made.

Parent topic: Selecting Epson ScanSmart Settings

Software Settings Required for Special Originals

Select the following settings according to the type of original being scanned.

Type of Original	Required Settings
Carrier sheet	If you select **Auto Detect** in the Document Size list, skewing of the original is automatically corrected even if **Correct Document Skew** is set to **Off**. If you select any other size in the Document Size list, you can only select **Contents Skew** as the **Correct Document Skew** setting. When you select **Paper and Contents Skew**, only contents skew will be corrected.
Passport carrier sheet	Select **Auto Detect** in the Document Size list to automatically detect and scan passports. To save only the ID page of your passport, select **Scan Settings** > **Passport**, select **Settings** in the Document Size list, then select **Save ID page only when scanning passports** on the Document Size Settings screen.
Large originals	If the size of the paper size is not listed in the Document Size list, select **Auto Detect** or select **Customize** to create a custom document size.
Long paper	If the paper size is not listed in the Document Size list, select **Auto Detect (Long Paper)** or select **Customize** to create a custom document size.
Plastic cards	Select **Plastic Card** in the Document Size list, or set **Detect Double Feed** to **Off**.

Type of Original	Required Settings
Laminated cards	To scan transparent areas around the document, select **Settings** in the Document Size list to open the Document Size Settings screen, then select **Scan laminated card** in the displayed window. **Note:** If transparent areas around the document cannot be scanned, select **Customize** in the Document Size list and create the size manually.
Envelopes	Set **Detect Double Feed** to **Off**.

Parent topic: Selecting Epson ScanSmart Settings

Changing the File Name Settings

You can change the default file naming method for your scans.

1. Click the **Settings** button.

   You see a screen like this:

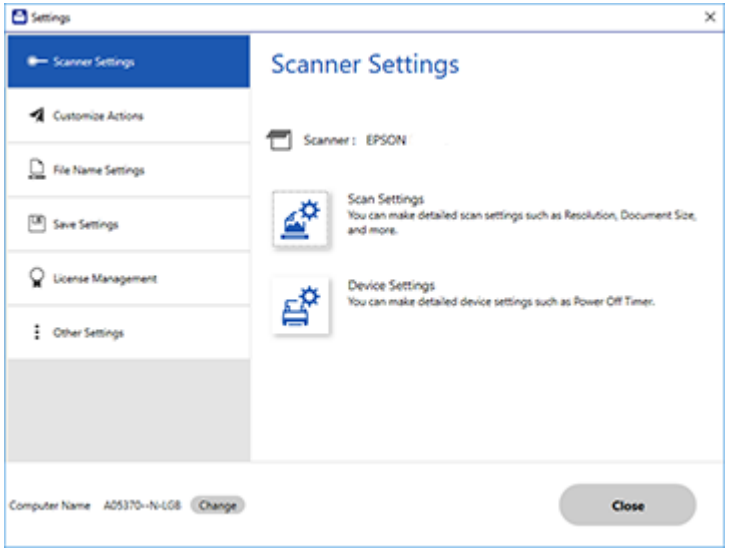

2. Click the **File Name Settings** tab.

You see a screen like this:

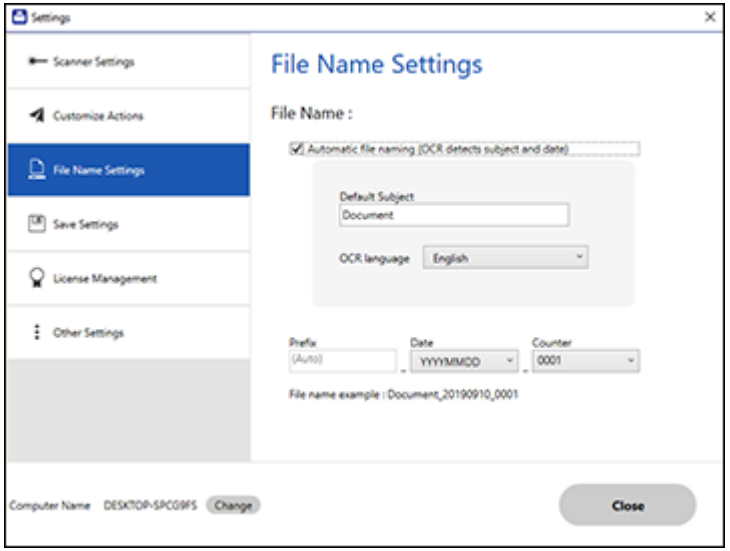

3. Change the settings as necessary:
   - Make sure the **Automatic file naming** checkbox is selected if you want OCR to automatically detect the subject and date and add them to the file name. You can enter a default file name that will be used if OCR cannot detect the subject.
   - Select the OCR language (the default language is English).
   - Select the date format.
4. Click **Close**.

Parent topic: Selecting Epson ScanSmart Settings

Changing the Save Settings

You can change the file type options for saving your scans.

1. Click the **Settings** button.

You see a screen like this:

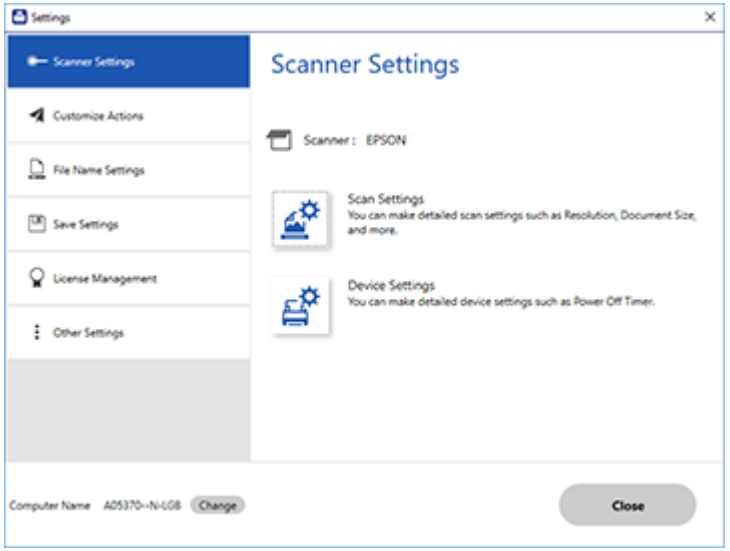

2. Click the **Save Settings** tab.

You see a screen like this:

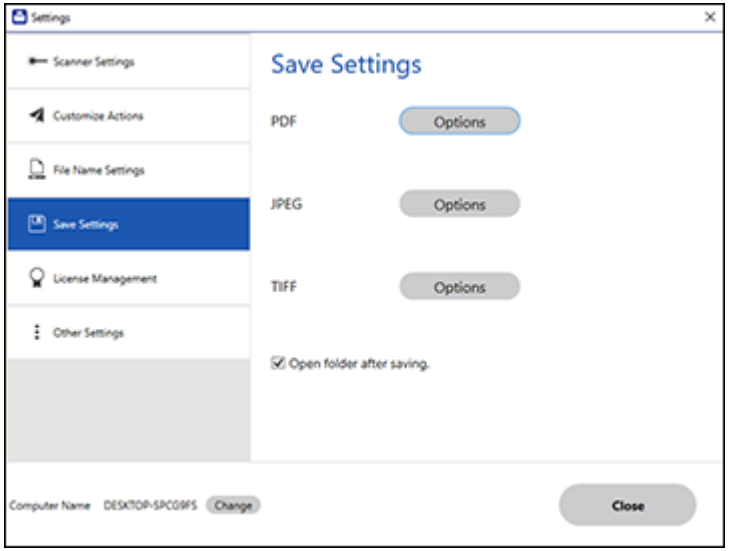

3. Click **Options** for a file format and change the settings as necessary.

   Note: If you want the folder to open after the file is saved, click the checkbox.

4. Click **Close**.

Parent topic: Selecting Epson ScanSmart Settings

Save Settings

You can change the settings for how scanned images are saved as PDFs or JPEGs.

PDF Options

Setting	Options	Description
General	**Generate PDF/A File**	Creates a PDF that conforms to PDF/A-1 standards
	Create file with all pages	Saves all pages as one file
	Compression Level	Selects the compression level for color or grayscale images
Security	**Open File Password**	Set a password to open the file
	Protect Property Settings	Sets a password to protect file properties and allows for restrictions on file editing and printing

JPEG Options

Setting	Options	Description
Image Quality Options	—	Sets a compression level by moving a slider or entering a value. File size increases when high resolution is selected.
Encoding (Windows only)	**Standard**	Images load from top to bottom in a web browser. It takes longer to load the entire image.
	Progressive	Images first load completely at low resolution and then adjust to high resolution in a web browser
Embed ICC Profile (Windows only)	—	Allows you to add ICC profiles to the image

TIFF Options

Setting	Options	Description
Byte Order	**Windows** **Macintosh**	Specifies the operating system format in which the scanned image is saved

Setting	Options	Description
Compression (Windows only)	—	Specifies the compression format and level for Color/Grayscale and B&W images. File size increases with higher quality.
Embed ICC Profile (Windows only)	—	Allows you to add ICC profiles to the image

Parent topic: Selecting Epson ScanSmart Settings

Customizing Action Icons

You can customize how the scan action icons are displayed on the **Select Action** screen.

Note: You can also customize them by clicking the **Customize** icon on the **Select Action** screen.

1. Click the **Settings** button.

   You see a screen like this:

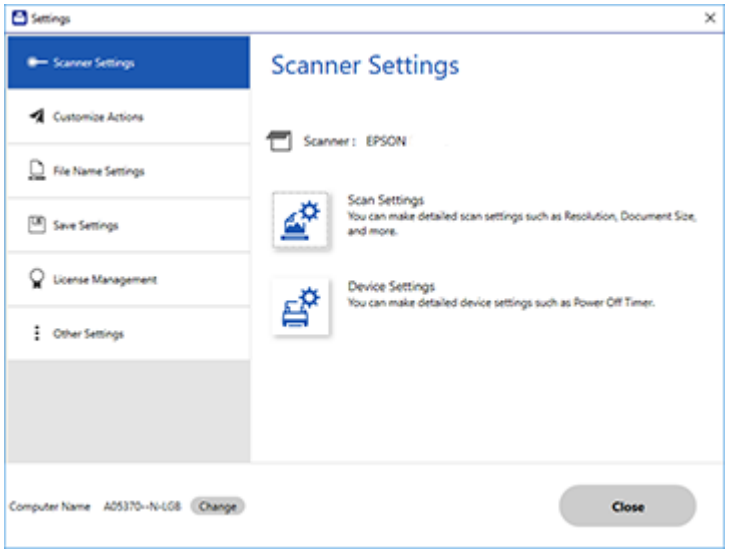

2. Click the **Customize Actions** tab.

You see a screen like this:

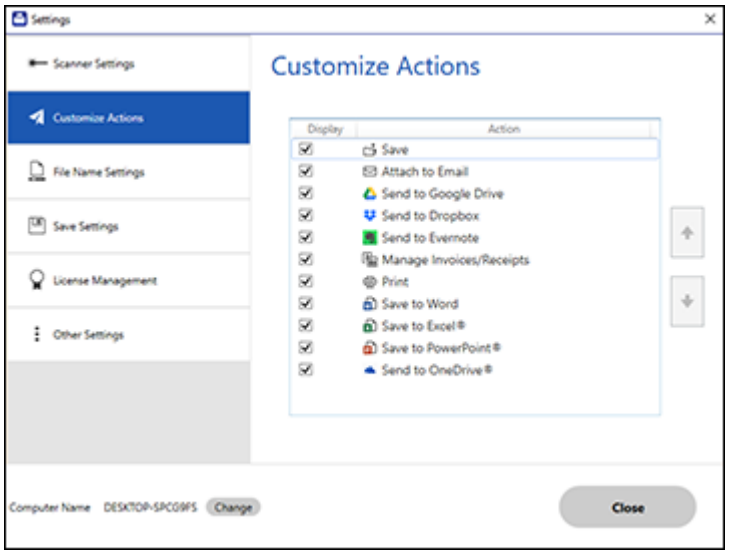

3. Choose which action icons to display by selecting or deselecting each checkbox. Click the arrow icons to move the icons up or down in the display order you want.
4. Click **Close**.

Parent topic: Selecting Epson ScanSmart Settings

Starting a Scan from a Scanning Program

You can start Epson Scan 2 from a TWAIN-compliant scanning program to select scan settings, scan, and open the scanned image in the program.

Note: If you are using your Epson product with the Windows 10 S operating system, you cannot use the software described in this section. You also cannot download and install any Epson product software from the Epson website for use with Windows 10 S; you must obtain software only from the Windows Store.

1. Open your scanning program and select its scanning option. (See your scanning program help for instructions.)

2. Select your product.

   Note: In certain programs, you may need to select your product as the "source" first. If you see a **Select Source** option, choose it and select your product. With Windows, do not select a **WIA** option for your product; not all scan functions will be available.

You see an Epson Scan 2 window like this:

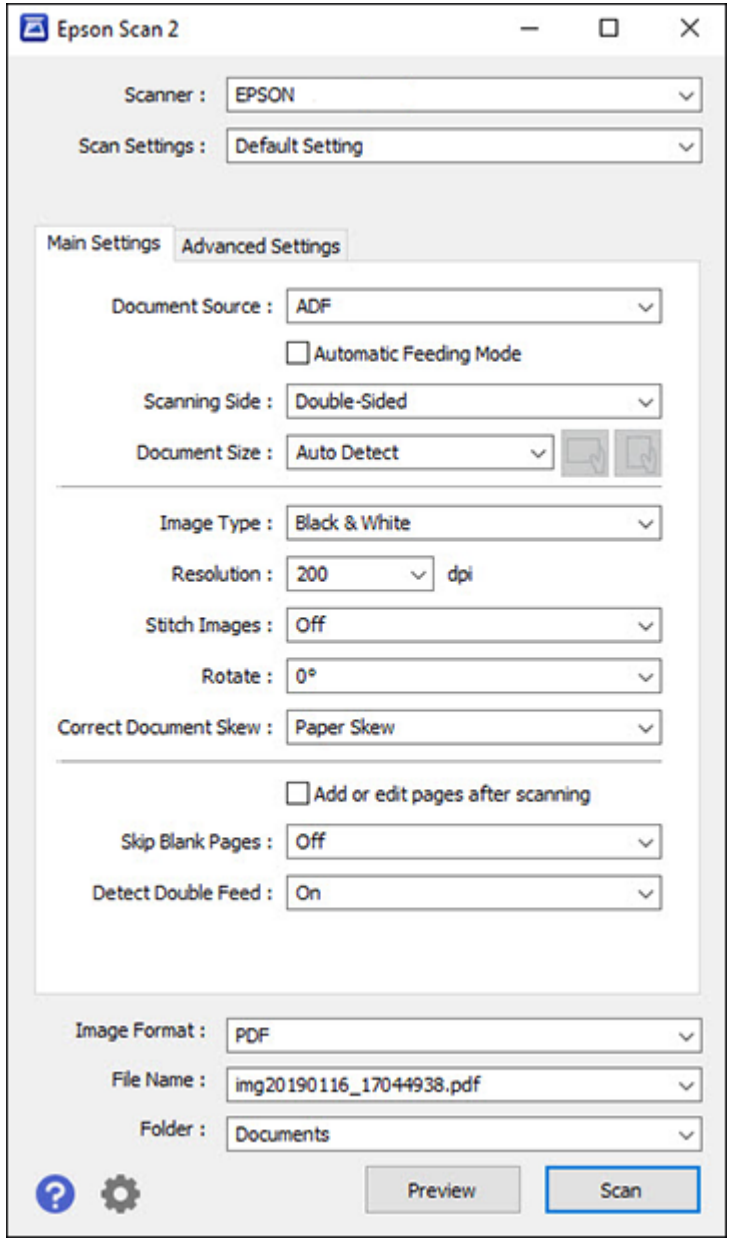

Parent topic: Starting a Scan

Starting a Scan from a Smartphone or Tablet

You can use the Epson Smart Panel app to scan from a network scanner to an iOS or Android device over a direct Wi-Fi connection.

Note: Epson Smart Panel does not support scanning with a carrier sheet, or scanning originals longer than 15.5 inches (393.7 mm).

1. Download the Epson Smart Panel app from your device's app store or from Epson's website. See the link below.
2. Place your original on the product for scanning.
3. Open the Epson Smart Panel app and select a scan menu on the home screen.
4. Follow the on-screen instructions to scan and save your original.

   Note: If the size of your original does not appear in the list, select **Auto**.

Parent topic: Starting a Scan

Related tasks

Using the Epson Smart Panel Mobile App

Scan Resolution Guidelines

The resolution setting in your scanning software, measured in dpi (dots per inch), controls the amount of detail captured in your scans. Increasing the resolution raises the amount of detail captured but comes with the following disadvantages:

- Larger file sizes
- It takes longer to scan your originals, send/receive your scans by email or fax, and to print your scans
- The image may become too large to fit on your display or print on paper

If you plan to enlarge a scanned image so you can print it at a larger size, you may need to increase the resolution from the default resolution set by the software. Follow these guidelines to determine the resolution setting you need:

- You will scan the image at its original size but enlarge it later in an image-editing program.

Increase the resolution setting in your scanning software. Increase the resolution by the same amount you will increase the image size to retain a high image quality. For example, if the resolution is 300 dpi (dots per inch) and you will double the image size later, change the resolution setting to 600 dpi.

- You will scan the image at 100% or smaller size.

  Select the resolution setting based on how you will use the scanned image:

  - Email/view on a computer screen/post on the web: 96 to 200 dpi
  - Print/fax/convert to editable text (OCR)/create searchable PDF: 200 to 300 dpi

Parent topic: Starting a Scan

Using Mopria Scan

Mopria Scan enables scanning from Mopria certified multifunction printers and scanners from many manufacturers. Mobile scanning from your Android phone or tablet may be accomplished using the Mopria Scan app in the Google Play Store.

Note: For details and support on Mopria Scan, visit https://mopria.org.

Parent topic: Starting a Scan

Related concepts

Connecting to an Existing Wi-Fi Network

Scanning with AirPrint

AirPrint enables instant scanning from a Mac without the need to install drivers or download software.

Note: You can only scan using AirPrint on a macOS system. The iOS operating system does not support scanning with AirPrint.

1. Load your originals.
2. Connect the product to the same network that your Mac is connected to, or connect the product to your Mac with a USB cable.
3. On the **System Preferences** screen on your Mac, click **Printers & Scanners**.
4. Select your scanner from the list, then click **Open Scanner**.
5. Select scan settings as needed, then start scanning.

Note: For details, see the macOS User Guide.

Parent topic: Starting a Scan

Related topics

Loading Originals

Cleaning and Transporting Your Product

See these sections if you need to clean or transport your product.

Cleaning Your Product
Cleaning Inside Your Product
Replacing the Rollers
Transporting Your Product

Cleaning Your Product

To keep your product working at its best, you should clean it several times a year.

Caution: Do not use a hard brush, alcohol, or paint thinner to clean the product or you may damage it. Do not use oil or other lubricants inside the product or let water get inside it. Do not open the product's outer case.

1. Turn off the scanner and unplug the AC adapter.
2. Disconnect any connected cables.
3. Clean the outer case with a soft, dry cloth. Do not use liquid or chemical cleansers.

   Note: If the outer case still requires additional cleaning, use a slightly damp cloth to wipe the outer case. Then wipe the case with a soft, dry cloth.

4. Clean the LCD screen with a soft, dry cloth.

Parent topic: Cleaning and Transporting Your Product

Cleaning Inside Your Product

Clean your product regularly to make sure that no dust builds up on the glass scanning surfaces. Dust can cause spots or lines in your scanned images. Clean the inside of the product every 5,000 scans. You can check the latest number of scans and set cleaning time notifications and alerts on the control panel or in the Epson Scan 2 Utility. By default, a notification is sent after every 5,000 scans.

Caution: Do not use a hard brush, alcohol, or paint thinner to clean the product or you may damage it. Do not use oil or other lubricants inside the product or let water get inside it. Do not open the product's outer case.

Caution: Be careful not to get your hands or hair caught in the gears or rollers when cleaning the inside the scanner. Otherwise, injury could occur.

Note: Clean inside your product while it is turned on.

1. Open the vertical path cover.

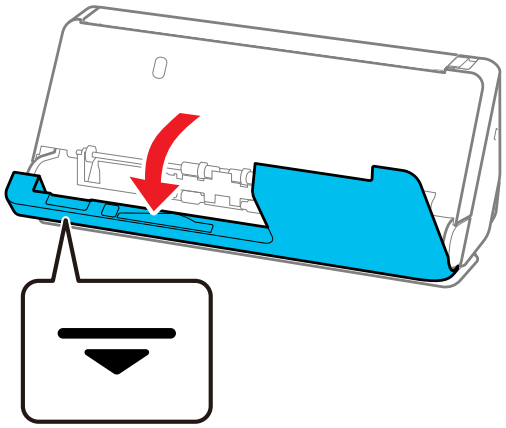

Note: When opening the vertical path cover, hold the area indicated to avoid touching the antistatic brush. If the brush becomes bent it cannot eliminate static electricity, and this may cause the output originals to stick to each other.

2. Wipe the rollers and plastic rollers with a soft, lint-free cloth dampened with a small amount of cleaner or water.

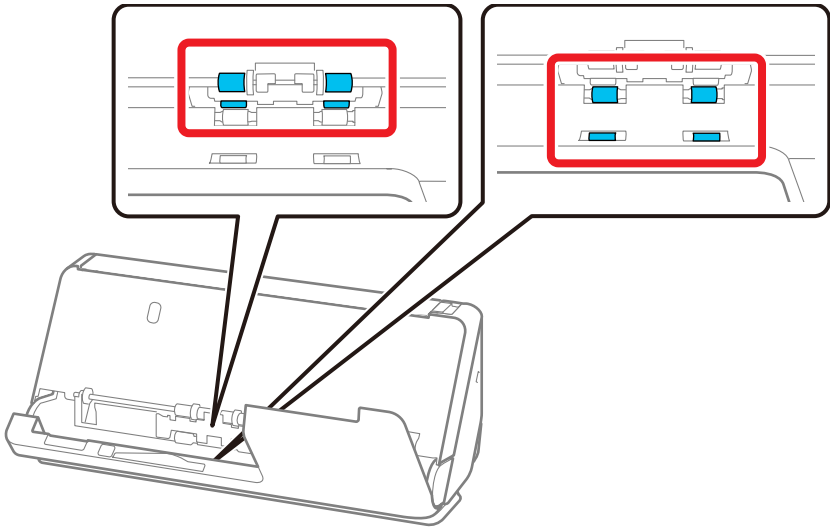

Note: Do not spray liquid directly into the scanner. Be careful not to touch the antistatic brush when wiping the rollers. If the brush becomes bent it cannot eliminate static electricity, and this may cause the output originals to stick to each other.

3. Open the input tray, and pull the lever to open the scanner cover.

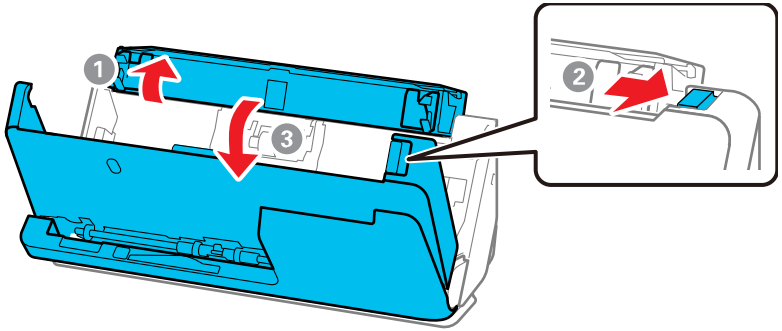

4. Wipe the 8 rollers shown with a soft, lint-free cloth dampened with a small amount of cleaner or water.

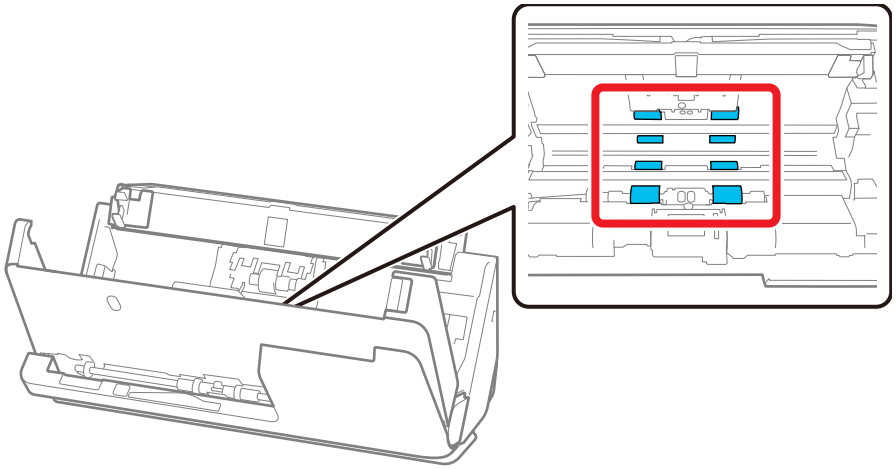

Note: Do not spray liquid directly into the scanner.

5. Close the scanner cover with both hands. Then, close the vertical path cover and then the input tray, in that order.

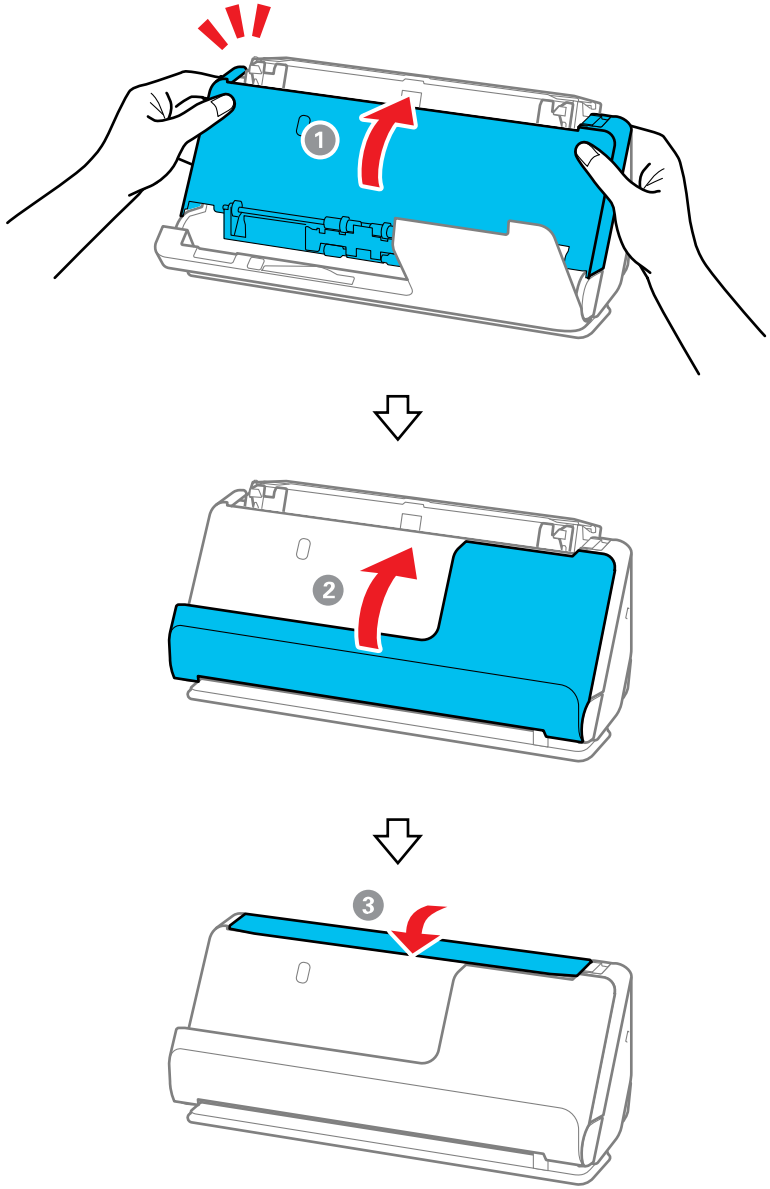

When the **Recovering** message no longer appears on the screen, proceed to the next step.

6. Repeat steps 1 to 5 four times. The internal rollers rotate approximately one-quarter of a turn each time the cover is closed. Repeat this step until the entire roller is clean.

   Note: If paper dust adheres to the inside of the vertical path cover, wipe it off with a soft, lint-free cloth.

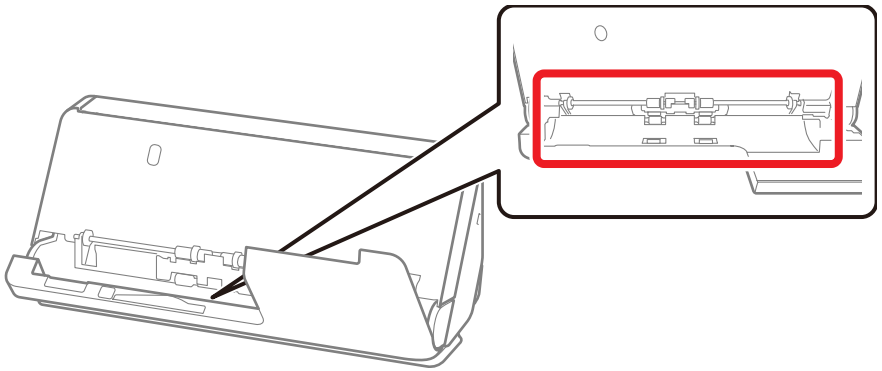

7. Open the input tray, and pull the lever to open the scanner cover.

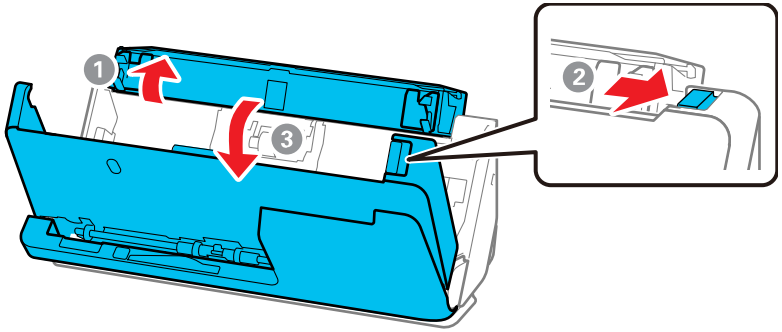

8. Use a genuine Epson cleaning kit or a soft, lint-free cloth to wipe off any dust or dirt on the glass scanning surfaces and the rollers inside the scanner cover. If the glass surface is stained with

grease or some other hard-to-remove material, use a genuine Epson cleaning kit with a small amount of cleaner on the cleaning cloth to remove the stains. Wipe off all remaining liquid.

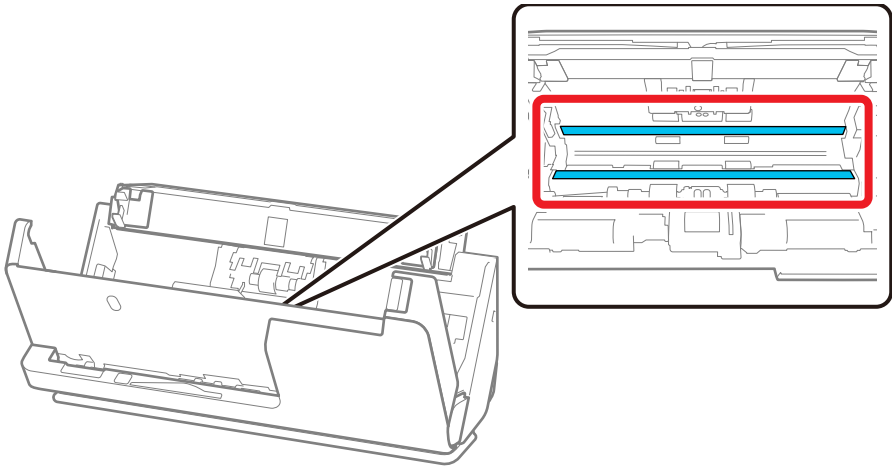

Caution: Do not use brushes or hard tools to clean the scanner glass. Any scratches on the glass may affect the scan quality. Do not spray cleaner directly on the scanning surfaces. Be careful not to place too much force on the glass.

9. Use a cotton swab to wipe off any dust or dirt on the sensors shown here.

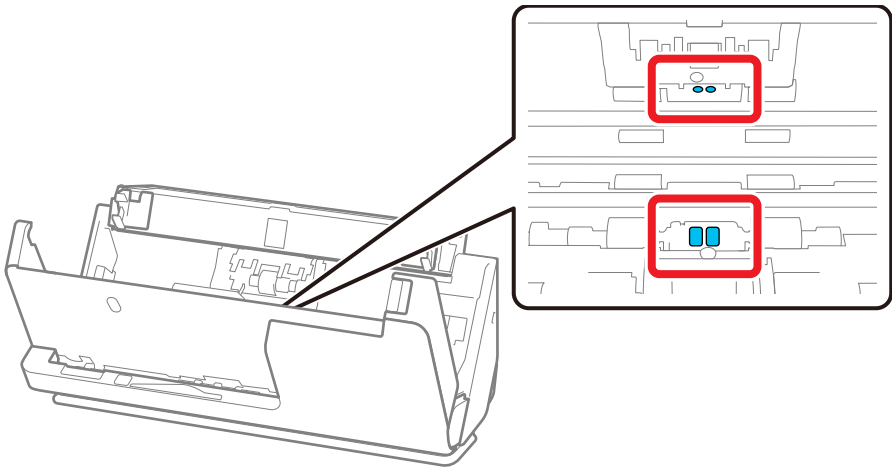

Caution: Do not use liquid or glass cleaner on the cotton swab.

Note: The ultrasonic sensors do not normally require maintenance. However, if multiple feed errors occur frequently, it is possible that dust that has accumulated around the ultrasonic sensors is being mistakenly detected as a multiple feed error. If this is the case, carefully wipe away any dust with a cotton swab. If you have a blower, such as one used to clean cameras, use it to remove the dust.

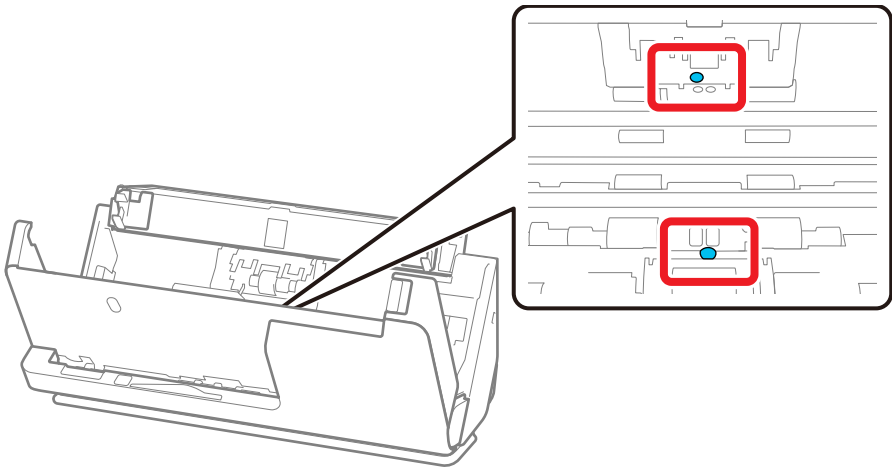

Do not spray cleaner directly onto the ultrasonic sensor. Also, be careful not to insert the cotton swab too far into the sensor and make sure no cotton fibers are left behind.

10. Open the cover and remove the separation roller.

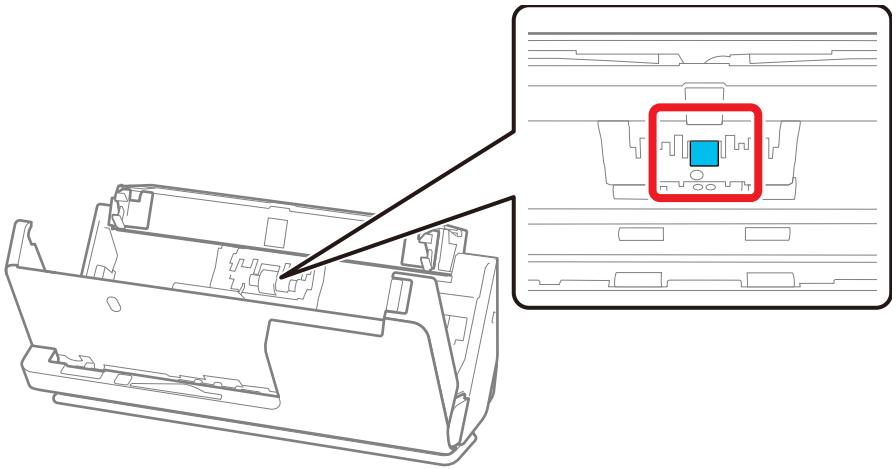

11. Wipe off any dust or dirt on the separation roller using a genuine Epson cleaning kit or a soft, moist cloth.

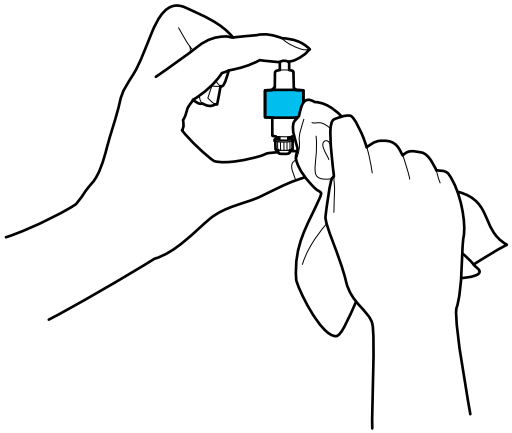

Caution: Use only a genuine Epson cleaning kit or soft, moist cloth to clean the roller; using a dry cloth may damage the surface of the roller. Do not spray cleaners directly inside the product; always spray cleaners on a cleaning cloth to slightly dampen the cloth. Wipe off any excess cleaner with a dry, lint-free cloth.

12. Replace the separation roller.
13. Open the cover, then remove the pickup roller.

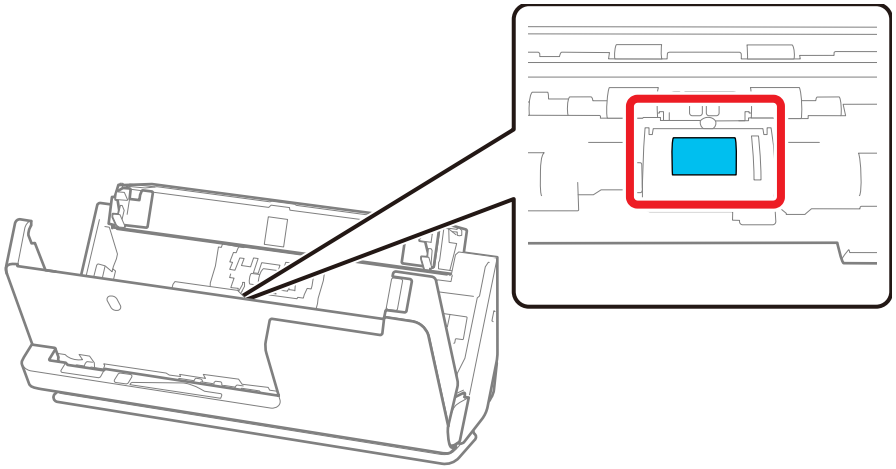

14. Wipe off any dust or dirt on the pickup roller using a genuine Epson cleaning kit or a soft, moist cloth.

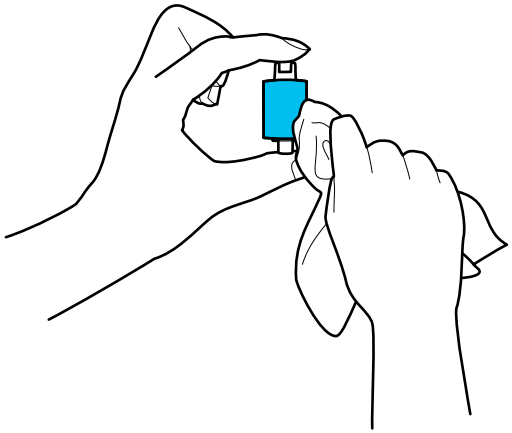

Caution: Use only a genuine Epson cleaning kit or soft, moist cloth to clean the roller; using a dry cloth may damage the surface of the roller.

15. Replace the pickup roller.
16. Close the scanner cover with both hands. Then, close the input tray.

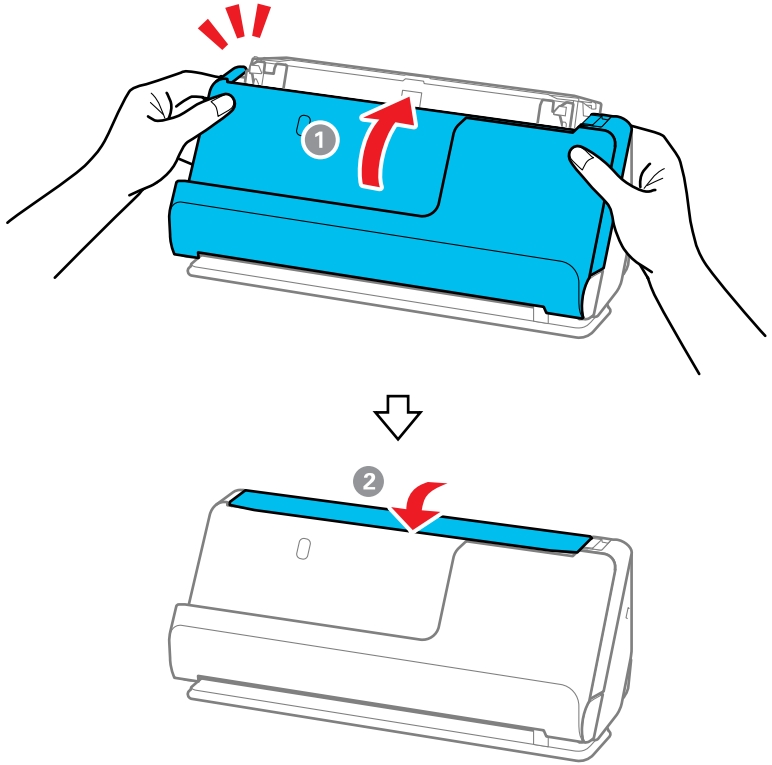

17. Reset the number of scans after cleaning.

Resetting the Number of Scans After Cleaning

Parent topic: Cleaning and Transporting Your Product

Related references

Optional Accessories and Replacement Parts

Related tasks

Replacing the Rollers

Resetting the Number of Scans After Cleaning

Reset the number of scans using the Epson Scan2 Utility after regular cleaning.

Note: To reset the number of scans from the control panel, select the home icon and select > **Scanner Maintenance** > **Regular Cleaning** > **Reset the Number of Scans** > **Yes**.

1. Make sure the scanner is turned on and connected to your computer.
2. Do one of the following to open the Epson Scan 2 Utility:
   - **Windows 11**: Click , then search for **Epson Scan 2 Utility** and select it.
   - **Windows 10**: Click and select **EPSON** > **Epson Scan 2 Utility**.
   - **Windows 8.x**: Navigate to the **Apps** screen and select **EPSON** > **Epson Scan 2 Utility**.
   - **Windows (other versions)**: Click or **Start** > **All Programs** or **Programs** > **EPSON** > **Epson Scan 2** > **Epson Scan 2 Utility**.
   - **Mac**: Open the **Applications** folder, click **Epson Software**, and click **Epson Scan 2 Utility**.
3. Click the **Maintenance** tab.

You see a screen like this:

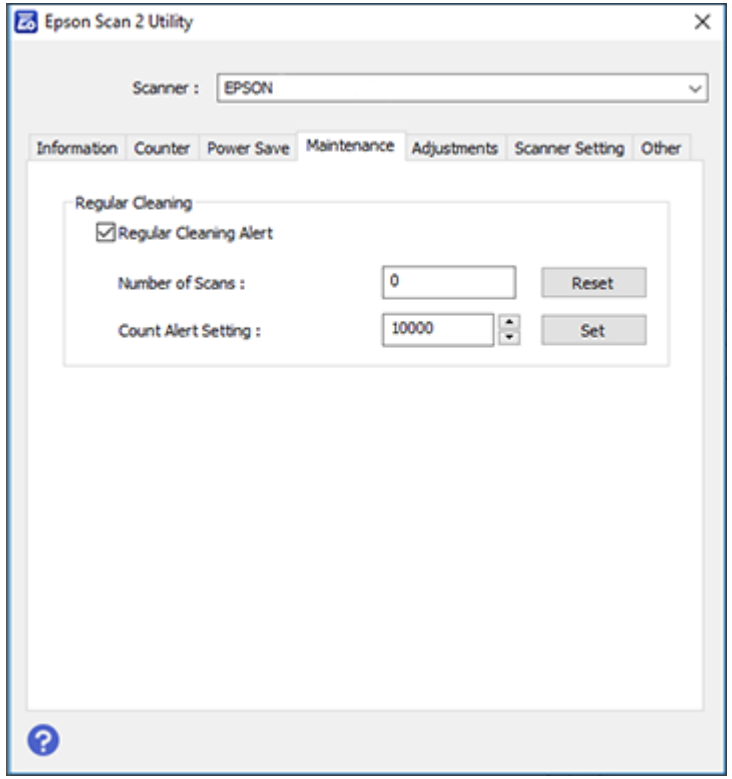

4. Select the **Regular Cleaning Alert** checkbox and click the **Reset** button.

   Note: You cannot reset if **Regular Cleaning Alert** is not selected.

5. Close the Epson Scan 2 Utility.

Parent topic: Cleaning Inside Your Product

Replacing the Rollers

Replace the roller assembly kit (A: separation roller, B: pickup roller) when the number of scans exceeds the life cycle of the rollers. Check the roller counter to see when you need to replace the rollers.

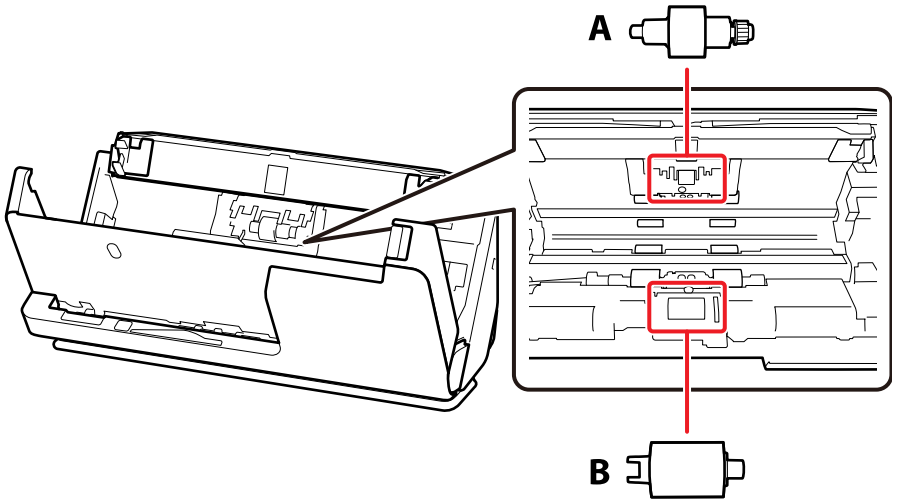

Note: Replace the rollers while the scanner is turned on.

1. Open the input tray, and pull the lever to the right to open the scanner cover.

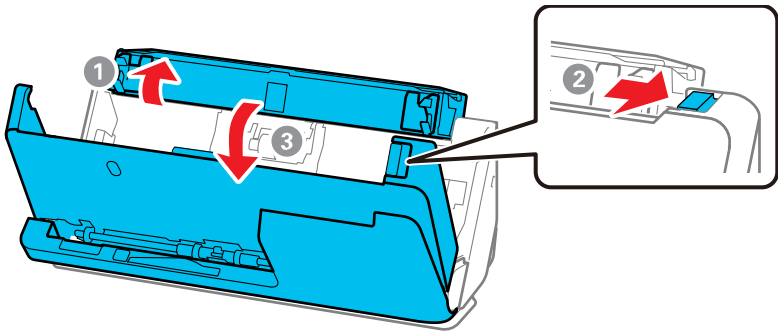

2. Press down on the separation roller cover latch and pull up the cover to remove it.

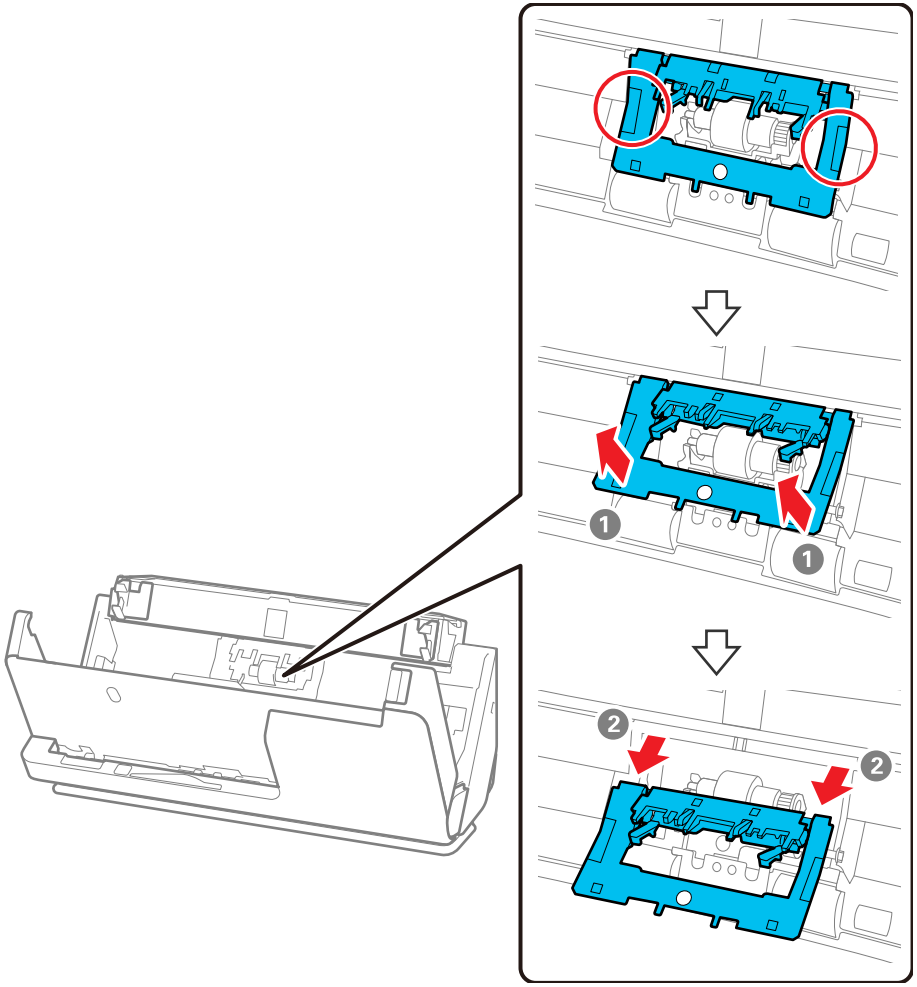

3. Lift up the separation roller and slide it to the left to remove it.

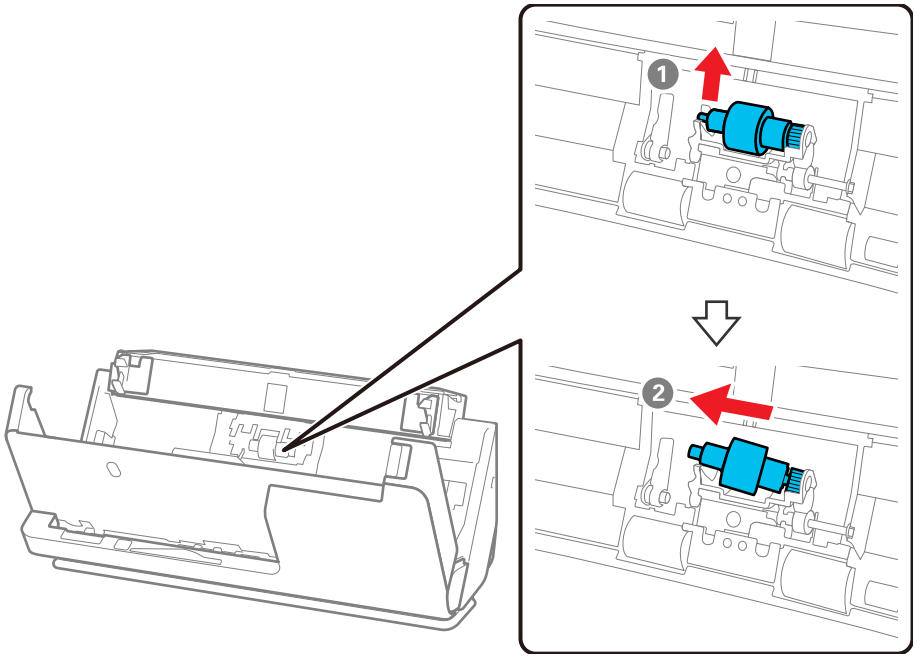

Note: Do not use force to pull out the separation roller; doing so may damage the inside of the product.

4. To install a new separation roller, insert the end of the roller into the hole on the right side and lower the other end of the roller into place.

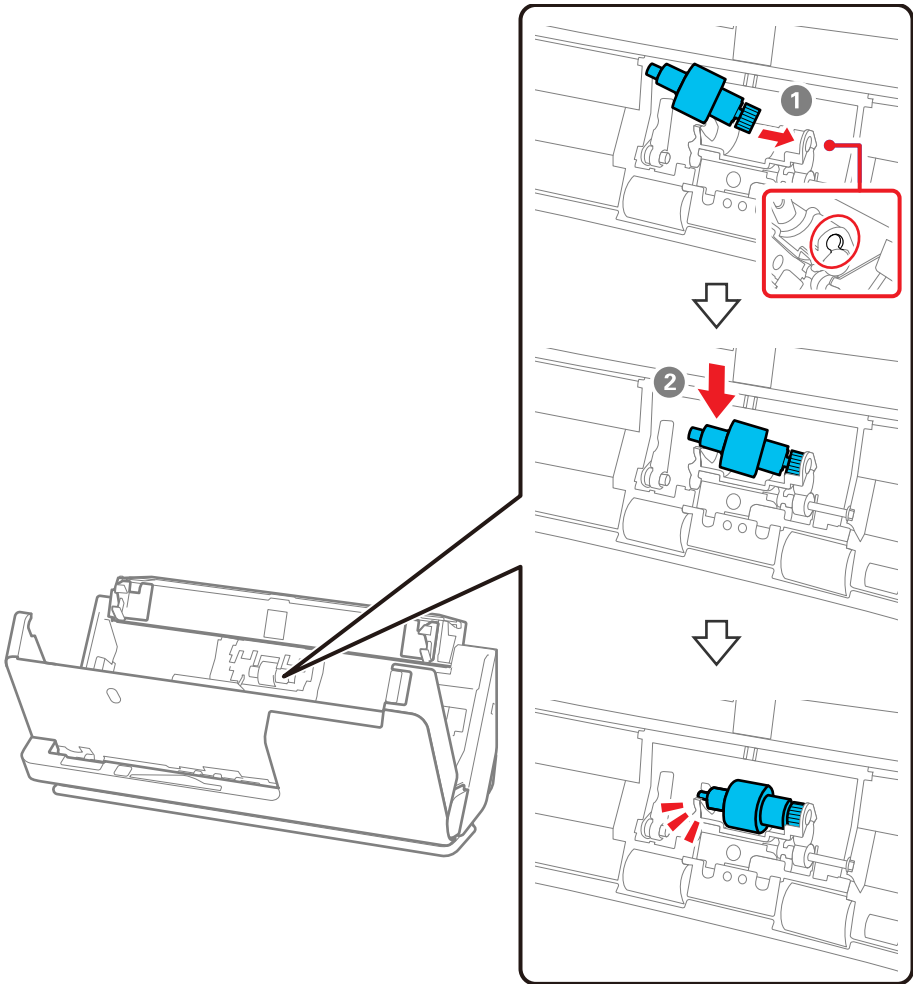

5. Attach the separation roller cover as shown. Insert the axis on the upper side of the cover into the grooves, and then close the cover firmly.

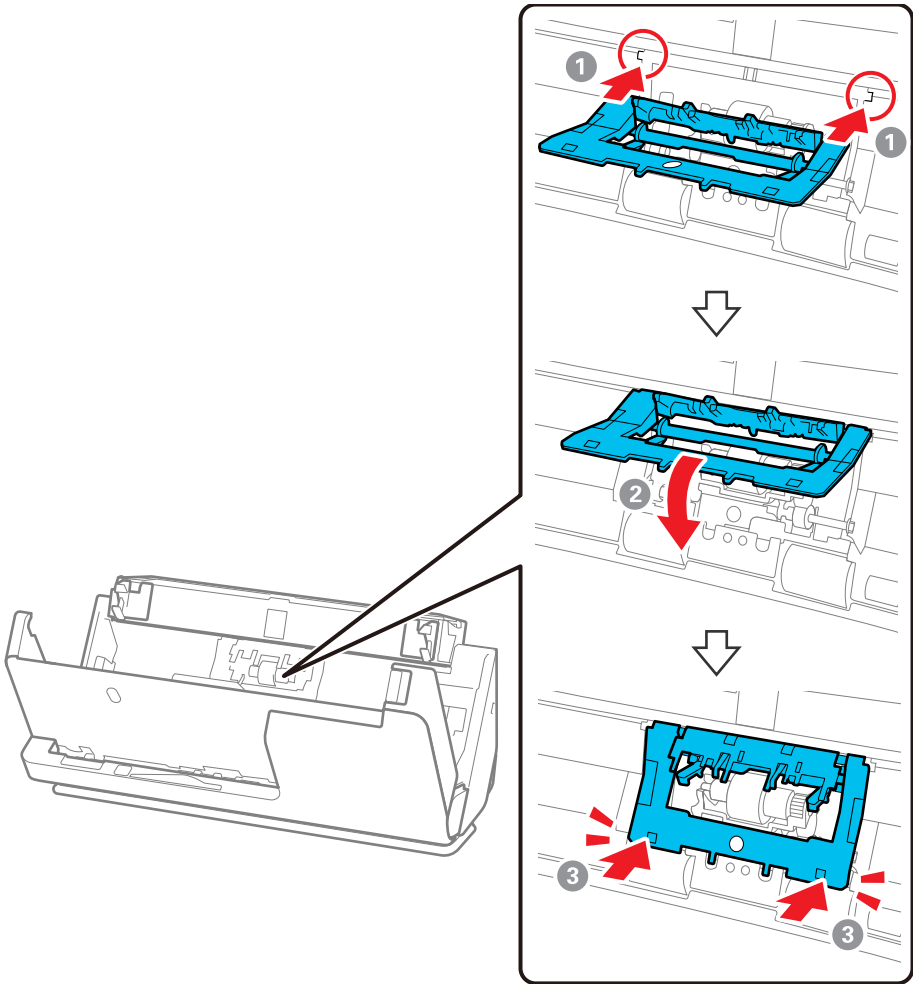

Note: If you are not able to close the cover, the roller is not installed correctly. Remove the roller and reinstall it, then try to close the cover again.

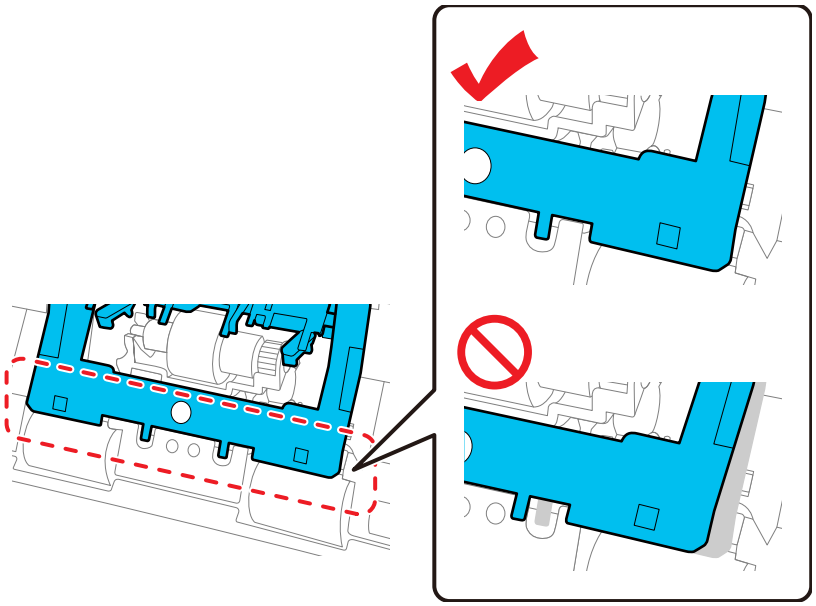

6. Open the cover of the pickup roller.

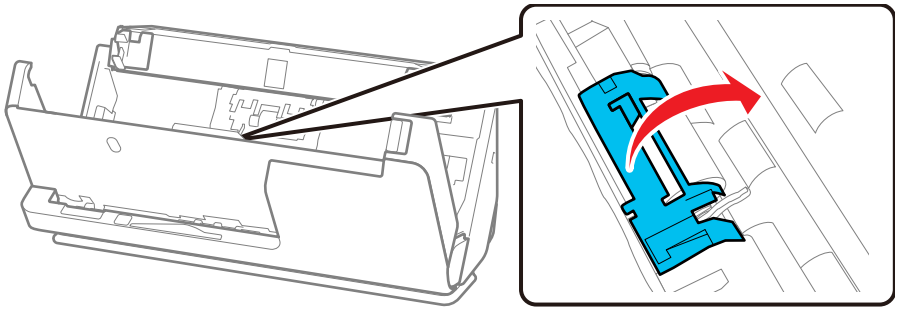

7. Slide the pickup roller to the right and lift up to remove it.

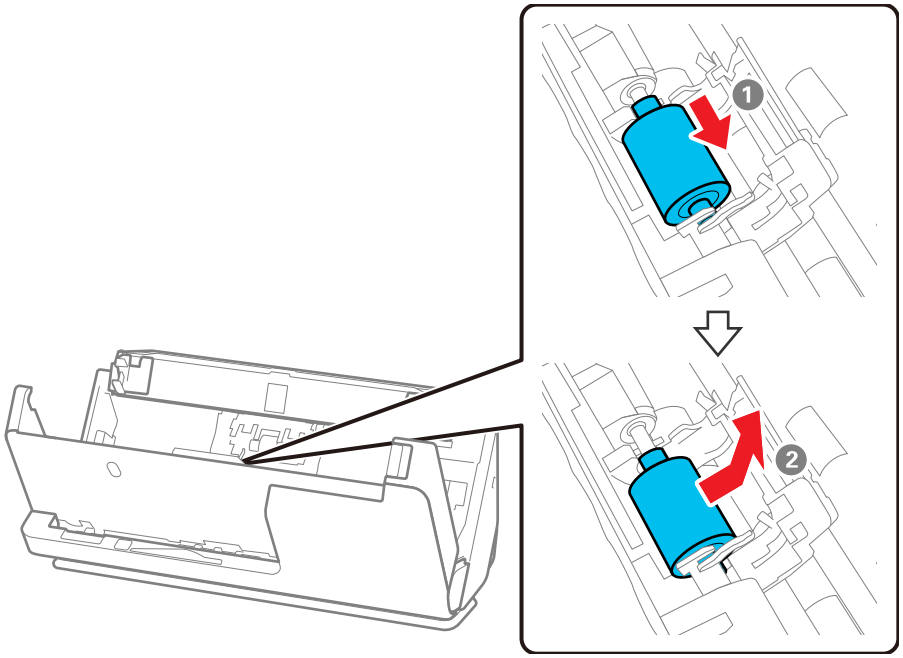

8. To install the new pickup roller, align the notches on the roller unit and slide it to the left. Lower the pickup roller, and then slide it to the back. Make sure the notches are aligned.

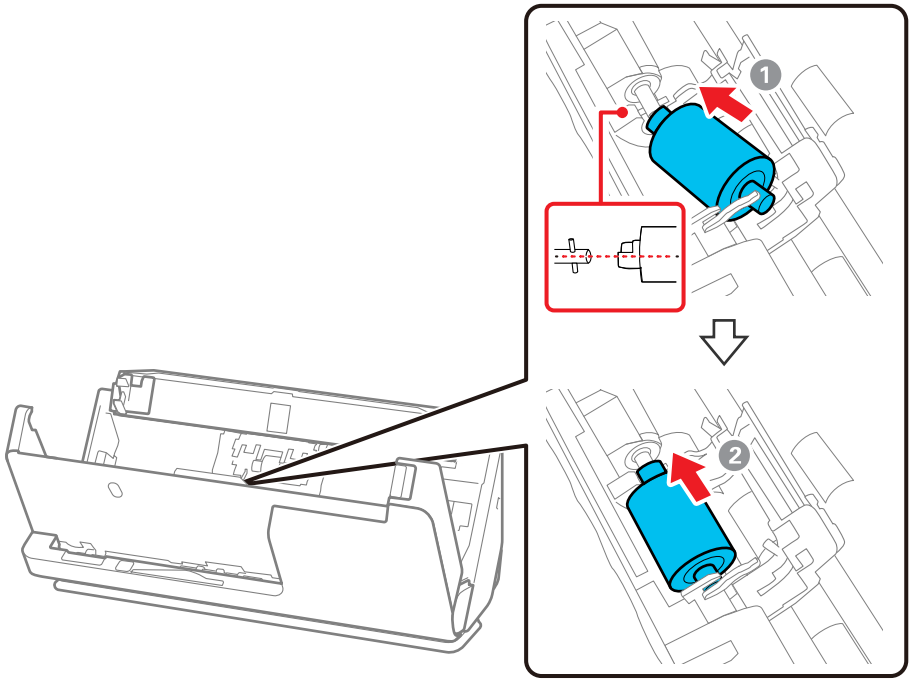

9. Align the bottom edge of the pickup roller cover into the notches as shown and press it down until it clicks into place.

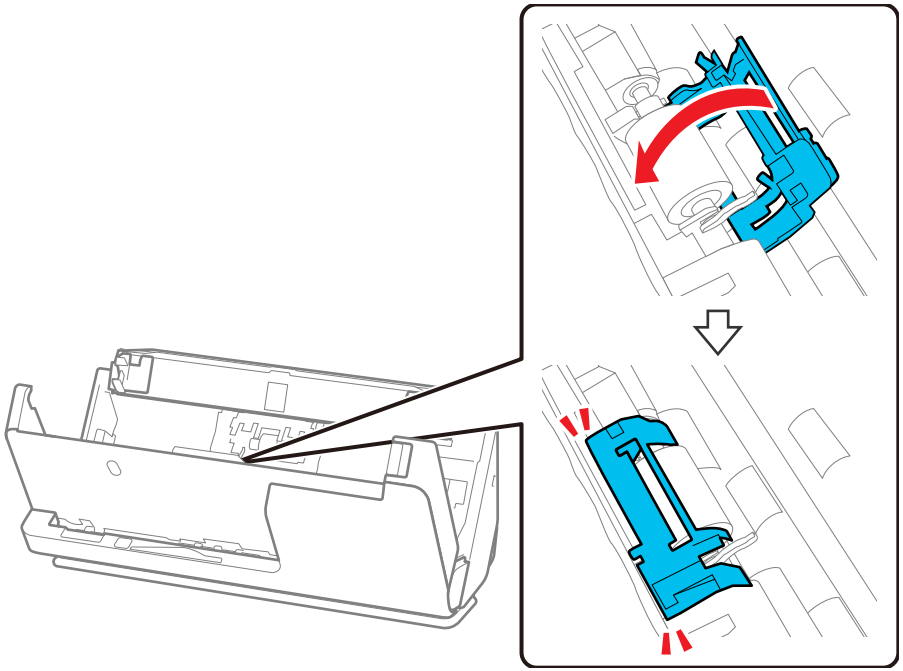

Note: If you are not able to close the cover, the pickup roller is not installed correctly. Remove the roller unit and reinstall it, then try to close the cover again.

10. Close the scanner cover with both hands, then close the input tray.

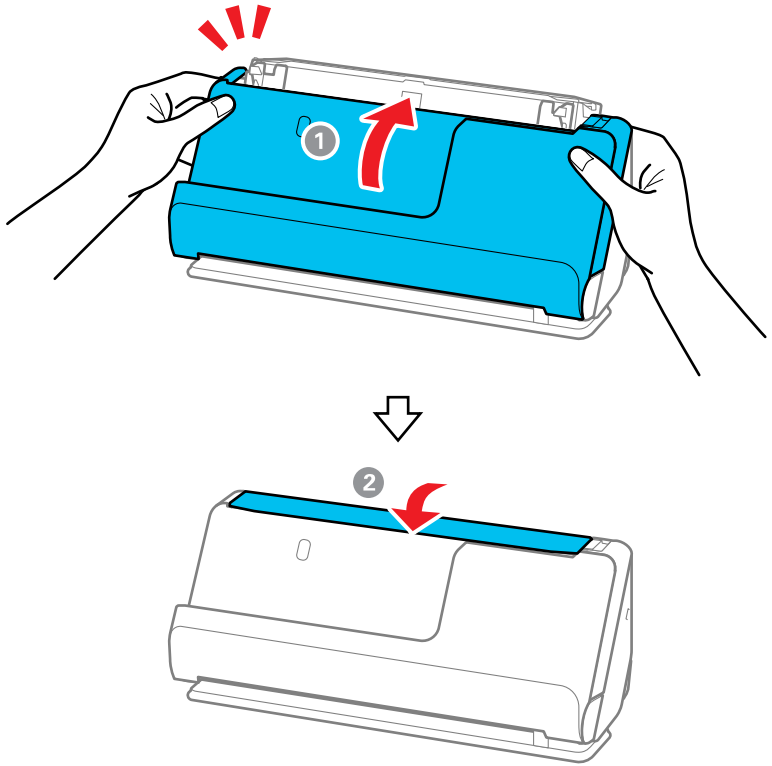

11. Reset the roller counter.

Note: Make sure to dispose of the pickup roller and the separation roller following the rules and regulations of your local authority. Do not disassemble them.

Resetting the Roller Counter

Parent topic: Cleaning and Transporting Your Product

Related references

Optional Accessories and Replacement Parts

Resetting the Roller Counter

When you replace the scanner rollers, reset the scanner roller counter so you know when you may need to replace the rollers again.

Note: To reset the roller counter from the control panel, select the home icon and select > **Scanner Maintenance** > **Roller Replacement** > **Reset the Number of Scans** > **Yes**.

1. Make sure the scanner is turned on and connected to your computer.
2. Do one of the following to open the Epson Scan 2 Utility:
   - **Windows 11**: Click , then search for **Epson Scan 2 Utility** and select it.
   - **Windows 10**: Click and select **EPSON** > **Epson Scan 2 Utility**.
   - **Windows 8.x**: Navigate to the **Apps** screen and select **EPSON** > **Epson Scan 2 Utility**.
   - **Windows (other versions)**: Click or **Start** > **All Programs** or **Programs** > **EPSON** > **Epson Scan 2** > **Epson Scan 2 Utility**.
   - **Mac**: Open the **Applications** folder, click **Epson Software**, and click **Epson Scan 2 Utility**.
3. Click the **Counter** tab.

You see a screen like this:

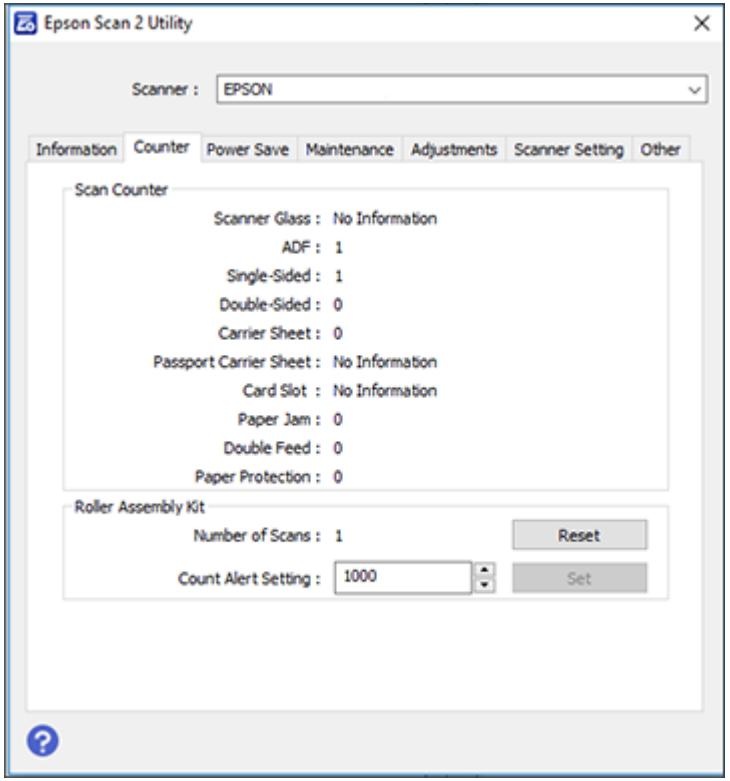

4. Click **Reset** under Roller Assembly Kit.

   The Number of Scans field changes to 0 (zero).

5. Close the Epson Scan 2 Utility.

Parent topic: Replacing the Rollers

Transporting Your Product

If you need to ship your product, transport it a long distance, or store it for an extended period, prepare it for transportation as described here.

1. Turn off the product and unplug the AC adapter.

2. Disconnect any connected cables.
3. Close the input tray extension and the input tray.

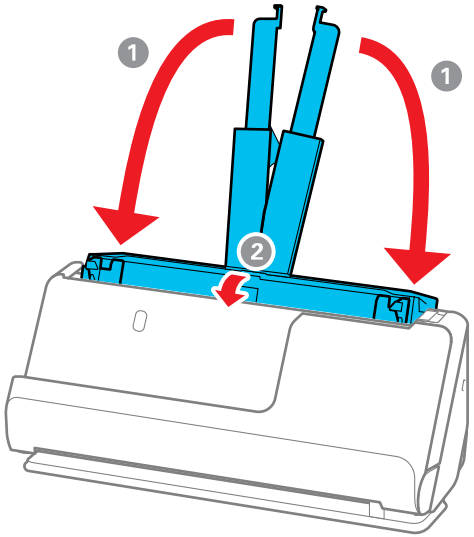

Note: Make sure the output tray paper support is securely closed.

4. Pull the position selector on the back of the product to the right, and tilt the scanner forward into the vertical path position.

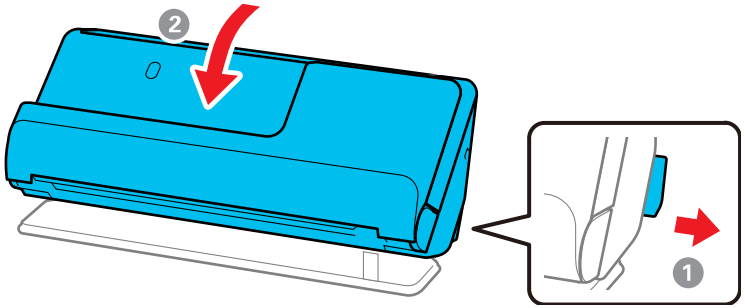

5. Place the product in its original packing materials, if possible, or use equivalent materials with cushioning around the product.

If you need to move the scanner, carry it as shown here.

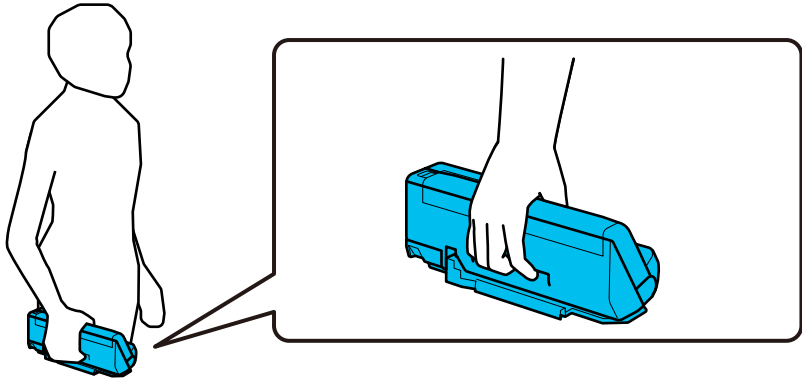

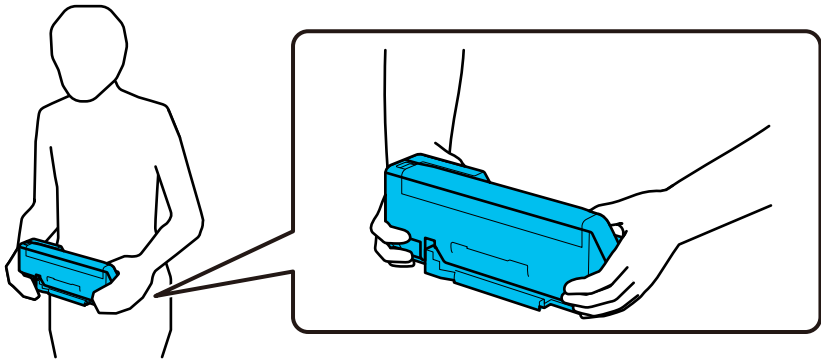

Note: Make sure to disconnect all cables, stow the input and output tray paper supports, and place the scanner in the vertical path position.

Parent topic: Cleaning and Transporting Your Product

Administering Your Product

Follow the instructions in these sections to configure your product's administrator settings using the Web Config software.

Note: Before you can configure system administration settings, you must connect the product to a network.

Accessing the Web Config Utility
Restricting Features Available for Users
Configuring Product Settings
Importing and Exporting Product Settings
Using Your Product on a Secure Network
Registering an Email Server

Related topics

Wi-Fi Networking

Accessing the Web Config Utility

You can select your product's network settings and confirm its operating status using a web browser. You do this by accessing your product's built-in Web Config utility from a computer or other device that is connected to the same network as your product.

Note: You can also access the Web Config utility from the product information area in the Epson Smart Panel app.

1. Check your product's network status on the LCD screen (**Settings** > **Network Settings** > **Network Status**). Then select the active connection method (**Wi-Fi Status** or **Wi-Fi Direct Status**).
2. Determine your product's IP address.
3. Launch an internet browser on a computer that is using the same network as your product.
4. Type your product's IP address into the address bar and press **Enter**.
5. If you see a warning about the self-signed certificate, ignore the warning and continue to the product IP address. See your browser help for details.

6. In the upper right corner of the screen, click **Log in** and enter the Administrator password using the following default values:
   - **User name**: none (blank)
   - **Password**: If there is a "Password" label attached to the back of your product, enter the 8-digit number shown on the label. If there is no "Password" label, enter the serial number shown on the label attached to your product.
7. Click **OK**.

   You see the available Web Config utility options.

Parent topic: Administering Your Product

Related tasks

Determining the Product's IP Address
Checking Status Information

Restricting Features Available for Users

Follow the instructions in these sections to restrict users from using certain product features and create an administrator password to lock the restrictions using the Web Config software.

Changing the Administrator Password in Web Config
Locking the Control Panel Using Web Config
Disabling the External Interface
Disabling Network Scanning
Disabling WSD Scan

Parent topic: Administering Your Product

Changing the Administrator Password in Web Config

You can set an administrator password using your product's control panel, Web Config, or EpsonNet Config. You use the same administrator password in all cases.

Note: If you forget your administrator password, contact Epson for support.

1. Access Web Config and select the **Product Security** tab.
2. Select **Change Administrator Password**.
3. Enter a user name, if necessary.

4. Do one of the following:
   - If you have set an administrator password before, enter the current password, then enter and confirm the new password in the fields provided.
   - If you have not set an administrator password before, enter the default password, then enter a new password and confirm it in the fields provided.

     Note: Be sure to remember the administrator password you set. If you forget your password, you will not be able to reset it and you will need to contact Epson.

5. Click **OK**.

Note: To restore the administrator password to the default value, select **Restore Default Settings** on the **Change Administrator Password** screen.

Parent topic: Restricting Features Available for Users

Related tasks

Accessing the Web Config Utility
Setting a Password and Locking the Control Panel

Locking the Control Panel Using Web Config

You can lock the control panel to prevent users from changing system settings.

1. Access Web Config and select the **Device Management** tab.
2. Select **Control Panel**.
3. Select **ON** for the **Panel Lock** setting.
4. Click **OK** to save your setting.

Parent topic: Restricting Features Available for Users

Related tasks

Accessing the Web Config Utility

Disabling the External Interface

You can restrict the ability to connect from a computer using a USB connection or accessing a connected USB device.

Note: Depending on your product features, not all of the options listed below may be available.

1. Access Web Config and select the **Product Security** tab.
2. Select **External Interface**.
3. Select the interface you want to disable and do one of the following:
   - Select **Disable** to prevent a connection
   - Select **Enable** to allow a connection
4. Click **OK** to save your setting.

Parent topic: Restricting Features Available for Users

Related tasks

Accessing the Web Config Utility

Preventing PC Connection via USB

Disabling Network Scanning

You can make the following settings in Web Config to disable network scanning using Epson Scan 2 from your computer.

1. Access Web Config and select the **Scan** tab.
2. Select **Network Scan**.
3. Under **Epson Scan 2**, deselect the **Enable scanning** check box.
4. Click **Next**.
5. Click **OK** to confirm your setting.

Parent topic: Restricting Features Available for Users

Related tasks

Accessing the Web Config Utility

Disabling WSD Scan

If you do not want your computer to configure the scanner as a WSD scanning device, follow the steps below to disable the WSD settings.

1. Access Web Config and select the **Network Security** tab.
2. Select **Protocol**.
3. Under **WSD Settings**, deselect the **Enable WSD** check box.
4. Click **Next**.

5. Click **OK** to confirm your setting.

Parent topic: Restricting Features Available for Users

Related tasks

Accessing the Web Config Utility

Setting Up a WSD Port (Windows 7)

Scanning Using WSD - Windows

Configuring Product Settings

Follow the instructions in these sections to configure your product's control panel settings using the Web Config software.

Checking Status Information

Configuring Email Notification

Managing the Network Connection

Updating Firmware Using Web Config

Parent topic: Administering Your Product

Checking Status Information

You can check information about the scanner using Web Config.

Note: Depending on the features of your product, not all of the options below may be available. Some options are not available unless you are logged in to Web Config.

1. Access Web Config and log in using the administrator name and password.
2. Select the **Status** tab and choose one of the following options:
   - Select **Product Status** to view product information.
   - Select **Network Status** to view network information such as the IP address and network connection status.
   - Select **Usage Status** to view information about the number of scans and historical information about the product.
   - Select **Hardware Status** to view information about the product functions.
   - Select **Panel Snapshot** to view a image of the current LCD screen.

Parent topic: Configuring Product Settings

Configuring Email Notification

You can configure email notifications using Web Config so you can receive alerts by email when certain events occur on the product. You can register up to 5 email addresses and select the events for which you want to be notified.

1. Access Web Config and select the **Device Management** tab.
2. Select **Email Notification**.

   You see a window like this:

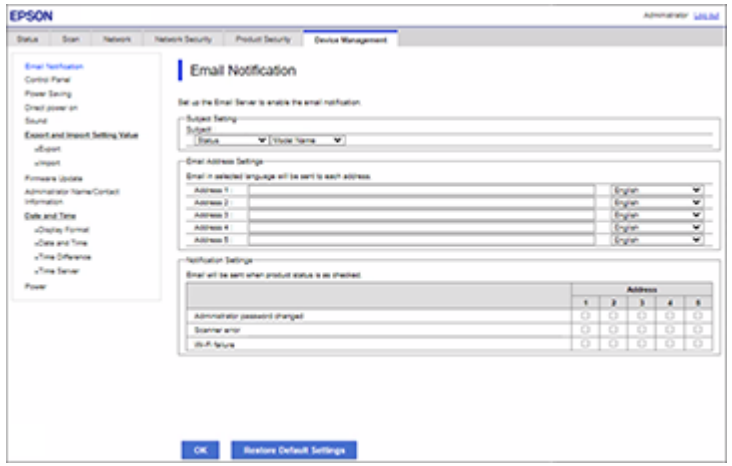

3. Select the subject contents from the two drop-down menus.
4. Enter email addresses in the Address fields as necessary, and select a language for each.
5. Select the checkboxes to indicate the events for which you want each address to receive email notifications.
6. Click **OK**.

Parent topic: Configuring Product Settings

Related tasks

Accessing the Web Config Utility

Scanning to Email

Managing the Network Connection

You can check or update the network information for your product using the Web Config interface.

1. Access Web Config and select the **Network** tab.
2. Select **Basic**.
3. Check or update the settings as necessary.
4. Select **Next** to see a summary of the network settings.
5. Select **OK** to accept the changes.

   Note: The network connection will be temporarily interrupted to enable the new settings.

Parent topic: Configuring Product Settings

Related tasks

Accessing the Web Config Utility

Updating Firmware Using Web Config

If your product is connected to the Internet, you can update the product firmware using Web Config.

Note: Make sure the product is not in use and clear any errors on the LCD screen before starting the update.

You can also update the firmware using Epson Device Admin. See the Epson Device Admin help for more details.

1. Access Web Config and select the **Device Management** tab.
2. Select **Firmware Update**.
3. Click **Start** to check for the latest firmware.
4. If there is a firmware update, click **Start** to begin the update.

   Note: Do not turn off the computer or the scanner while updating.

Parent topic: Configuring Product Settings

Related tasks

Accessing the Web Config Utility

Importing and Exporting Product Settings

Follow the instructions in these sections to import and export your product's settings using the Web Config software.

Exporting Settings Using Web Config
Importing Settings Using Web Config

Parent topic: Administering Your Product

Exporting Settings Using Web Config

You can export your product's settings and optionally encrypt the settings file with a password.

1. Access Web Config and select the **Device Management** tab.
2. Under **Export and Import Setting Value**, select **Export**.
3. Select the settings you want to export.

   Note: If you select a parent category, the child categories are also selected. By default, items that are unique on the network, such as IP address, cannot be selected. If you want to export these items, select **Enable to select the individual settings of device**. It is recommended that you export only unique items when replacing a product on the network, otherwise you may encounter conflicts on the network.

4. Enter and confirm an encryption password, if desired.

   Note: You will need the password to import the file. Leave this blank if you do not want to encrypt the file.

5. Click **Export** and save the file.

Parent topic: Importing and Exporting Product Settings

Related tasks

Accessing the Web Config Utility
Changing the Administrator Password in Web Config

Importing Settings Using Web Config

You can import the product settings file that was previously exported. If encryption was used when the settings were exported, obtain the necessary password before you import.

Note: When importing values that include individual information such as a scanner name or IP address, make sure the same IP address does not exist on the same network.

1. Access Web Config and select the **Device Management** tab.
2. Under **Export and Import Setting Value**, select **Import**.
3. Click **Browse** and select the exported settings file.
4. If necessary, enter the decryption password.
5. Click **Next**.
6. Select the settings to import and click **Next**.
7. Click **OK**.

The selected settings are imported to the product.

Parent topic: Importing and Exporting Product Settings

Related tasks

Accessing the Web Config Utility

Using Your Product on a Secure Network

Follow the instructions in these sections to configure security features for your product on the network using the Web Config software.

Configuring Protocols and Services in Web Config
Protocol Settings
Using a Digital Certificate
Configuring SSL/TLS Communication
Configuring IPsec/IP Filtering
Connecting the Product to an IEEE 802.1X Network
Using Epson Device Admin Configuration Software

Parent topic: Administering Your Product

Configuring Protocols and Services in Web Config

You can enable or disable protocols using Web Config.

1. Access Web Config and select the **Network Security** tab.
2. Select **Protocol**.

3. Select or deselect the checkbox next to the service name to enable or disable a protocol.
4. Configure any other available protocol settings.
5. Click **Next**.
6. Click **OK**.

After the protocols restart, the changes are applied.

Parent topic: Using Your Product on a Secure Network

Related tasks

Accessing the Web Config Utility

Protocol Settings

Protocols

Name	Description
Bonjour	Bonjour is used to search for devices and AirPrint
SLP	SLP is used for push-scanning and network searching in EpsonNet Config
WSD	Add WSD devices, or print and scan from the WSD port
LLTD	Displays the product on the Windows network map
LLMNR	Use name resolution without NetBIOS even if you cannot use DNS
SNMPv1/v2c	Remotely set up and monitor your product
SNMPv3	Remotely set up and monitor your product with the SNMPv3 protocol

Bonjour Settings

Setting	Options/Description
Use Bonjour	Search for or use devices through Bonjour
Bonjour Name	Displays the Bonjour name
Bonjour Service Name	Displays the Bonjour service name

Setting	Options/Description
Location	Displays the Bonjour location name
Wide-Area Bonjour	Enables the Wide-Area Bonjour protocol; register all products on the DNS server to locate them over the segment

SLP Settings

Setting	Options/Description
Enable SLP	Enable the SLP function to use the Push Scan function and network searching in EpsonNet Config

WSD Settings

Setting	Options/Description
Enable WSD	Enable adding devices using WSD, and printing and scanning from the WSD port
Scanning Timeout (sec)	Enter the communication timeout value for WSD scanning between 3 and 3,600 seconds
Device Name	Displays the WSD device name
Location	Displays the WSD location name

LLTD Settings

Setting	Options/Description
Enable LLTD	Enable LLTD to display the product in the Windows network map
Device Name	Displays the LLTD device name

LLMNR Settings

Setting	Options/Description
Enable LLMNR	Enable LLMNR to use name resolution without NetBIOS, even if you cannot use DNS

SNMPv1/v2c Settings

Setting	Options/Description
Enable SNMPv1/v2c	Enable SNMPv1/v2c for products that support SNMPv3
Access Authority	Set the access authority when SNMPv1/v2c is enabled to **Read Only or Read/Write**
Community Name (Read Only)	Enter 0 to 32 ASCII characters
Community Name (Read/Write)	Enter 0 to 32 ASCII characters

SNMPv3 Settings

Setting	Options/Description
Enable SNMPv3	Enable SNMPv3 for products that support SNMPv3
User Name	Enter 1 to 32 characters
Authentication Settings	Select an algorithm and set a password for authentication
Encryption Settings	Select an algorithm and set a password for encryption
Context Name	Enter 1 to 32 characters in Unicode (UTF-8)

Parent topic: Using Your Product on a Secure Network

Using a Digital Certificate

Follow the instructions in these sections to configure and use digital certificates using Web Config.

About Digital Certification
Obtaining and Importing a CA-signed Certificate
CSR Setup Settings
CSR Import Settings
Deleting a CA-signed Certificate
Updating a Self-signed Certificate
Importing a CA Certificate
Deleting a CA Certificate

Parent topic: Using Your Product on a Secure Network

About Digital Certification

You can configure the following digital certificates for your network using Web Config:

CA-signed Certificate
You can ensure secure communications using a CA-signed certificate for each security feature. The certificates must be signed by and obtained from a CA (Certificate Authority).

CA Certificate
A CA certificate indicates that a third party has verified the identity of a server. You need to obtain a CA certificate for server authentication from a CA that issues it.

Self-signed Certificate
A self-signed certificate is issued and signed by the product itself. You can use the certificate for only SSL/TLS communication, however security is unreliable and you may see a security alert in the browser during use.

Parent topic: Using a Digital Certificate

Obtaining and Importing a CA-signed Certificate

You can obtain a CA-signed certificate by creating a CSR (Certificate Signing Request) using Web Config and submitting it to a certificate authority. The CSR created in Web Config is in PEM/DER format. You can import one CSR created from Web Config at a time.

1. Access Web Config and select the **Network Security** tab.
2. Select one of the following network security options and corresponding certificates:
   - **SSL/TLS** and select **Certificate**
   - **IPsec/IP Filtering** and select **Client Certificate**
   - **IEEE802.1X** and select **Client Certificate**
3. In the CSR section, select **Generate**.
4. Select the CSR setting options you want to use.
5. Click **OK**.

   You see a completion message.
6. Select the **Network Security** tab and select your network security option and corresponding certificate again.
7. In the CSR section, click the **Download** option that matches the format specified by your certificate authority to download the CSR.

   Caution: Do not generate another CSR or you may not be able to import a CA-signed certificate.

8. Submit the CSR to the certificate authority following the format guidelines provided by that authority.
9. Save the issued CA-signed certificate to a computer connected to the product.

   Before proceeding, make sure the time and date settings are correct on your product.
10. In the CA Certificate section, click **Import**.
11. Select the format of the certificate as the **Server Certificate** setting.
12. Select the certificate import settings as necessary for the format and the source from which you obtained it.
13. Click **OK**.

    You see a confirmation message.
14. Click **Confirm** to verify the certificate information.

Parent topic: Using a Digital Certificate

Related references

CSR Setup Settings

CSR Import Settings

Related tasks

Accessing the Web Config Utility

CSR Setup Settings

You can select these settings when setting up a CSR in Web Config.

Note: The available key length and abbreviations vary by certificate authority, so follow the rules of that authority when entering information in the CSR.

Setting	Options/Description
Key Length	Select a key length for the CSR

Setting	Options/Description
Common Name	Enter a name or static IP address from 1 to 128 characters long. The first element is stored to the common name, and other elements are stored to the alias field of the certificate subject. For example: Scanner's IP address: 192.0.2.123, Scanner name: EPSONA1B2C3 Common Name: EPSONA1B2C3,EPSONA1B2C3.local,192.0.2.123
Organization, **Organizational Unit**, **Locality**, **State/Province**	Enter information in each field as necessary, from 0 to 64 characters long in ASCII; separate any multiple names with commas
Country	Enter a two-digit country code number as specified by the ISO-3166 standard
Sender's Email Address	Enter the sender's email address for the mail server setting

Parent topic: Using a Digital Certificate

CSR Import Settings

You can configure these settings when importing a CSR in Web Config.

Note: The import setting requirements vary by certificate format and how you obtained the certificate.

Certificate format	Setting descriptions
PEM/DER format obtained from Web Config	**Private Key**: Do not configure because the product contains a private key **Password**: Do not configure **CA Certificate 1/CA Certificate 2**: Optional

Certificate format	Setting descriptions
PEM/DER format obtained from a computer	**Private Key**: Configure a private key **Password**: Do not configure **CA Certificate 1/CA Certificate 2**: Optional
PKCS#12 format obtained from a computer	**Private Key**: Do not configure **Password**: Optional **CA Certificate 1/CA Certificate 2**: Do not configure

CA-signed Certificate Import Settings

Setting	Description
Server Certificate or **Client Certificate**	Select the certificate format. For an SSL/TLS connection, the Server Certificate is displayed. For an IPsec/IP Filtering, IEEE802.1x, or S/MIME connection, the Client Certificate is displayed. **Note:** Depending on your product, not all connection types may be available.
Private Key	If you obtain a certificate of the PEM/DER format by using a CSR created from a computer, specify a private key file that matches the certificate.
Password	If the file format is **Certificate with Private Key (PKCS#12)**, enter the password for encrypting the private key that is set when you obtain the certificate.
CA Certificate 1	If your certificate's format is **Certificate (PEM/DER)**, import a certificate from a certificate authority that issues a CA-signed Certificate to be used as the server certificate. Specify a file if necessary.

Setting	Description
CA Certificate 2	If your certificate's format is **Certificate (PEM/DER)**, import a certificate from the same certificate authority that issued CA Certificate 1. Specify a file if necessary.

Parent topic: Using a Digital Certificate

Deleting a CA-signed Certificate

You can delete an imported CA-signed certificate with Web Config when the certificate expires or if you have no more need for an encrypted connection.

Note: If you obtained a CA-signed certificate from Web Config, you cannot import a deleted certificate; you must obtain and import a new certificate.

1. Access Web Config and select the **Network Security** tab.
2. Select one of the following network security options and corresponding certificate:
   - **SSL/TLS** and select **Certificate**
   - **IPsec/IP Filtering** and select **Client Certificate**
   - **IEEE802.1X** and select **Client Certificate**
3. Click **Delete**.

   You see a completion message.
4. Click **OK**.

Parent topic: Using a Digital Certificate

Related tasks

Accessing the Web Config Utility

Updating a Self-signed Certificate

If your product supports the HTTPS server feature, you can update a self-signed certificate using Web Config.

1. Access Web Config and select **Network Security**, select **SSL/TLS**, and select **Certificate**.
2. Click **Update**.
3. Enter an identifier for your product from 1 to 128 characters long in the **Common Name** field.

4. Select a validity period for the certificate as the **Certificate Validity (year)** setting.
5. Click **Next**.

   You see a completion message.
6. Click **OK**.
7. Click **Confirm** to verify the certificate information.

Parent topic: Using a Digital Certificate

Related tasks

Accessing the Web Config Utility

Importing a CA Certificate

You can import a CA certificate using Web Config.

1. Access Web Config and select **Network Security**.
2. Select **CA Certificate**.
3. Select **Import**.
4. Select the CA certificate you want to import.
5. Click **OK**.

When you see the **CA Certificate** page and the imported certificate is displayed, the import is finished.

Parent topic: Using a Digital Certificate

Related tasks

Accessing the Web Config Utility

Deleting a CA Certificate

You can delete an imported CA certificate with Web Config when the certificate expires or if you have no more need for an encrypted connection.

1. Access Web Config and select **Network Security**.
2. Select **CA Certificate**.
3. Locate the certificate you want to remove and click the **Delete** button next to it.
4. Click **OK** to confirm the deletion.
5. Click **Reboot Network**, and then check that the deleted CA Certificate is not listed on the updated screen.

Parent topic: Using a Digital Certificate

Related tasks

Accessing the Web Config Utility

Configuring SSL/TLS Communication

Follow the instructions in these sections to configure SSL/TLS communication using Web Config.

Configuring SSL/TLS Settings

Configuring a Server Certificate for the Product

Parent topic: Using Your Product on a Secure Network

Configuring SSL/TLS Settings

If your product supports HTTPS, you can configure SSL/TLS to encrypt communications with your product.

1. Access Web Config and select the **Network Security** tab.
2. Select **SSL/TLS** > **Basic**.
3. Select one of the options for the **Encryption Strength** setting.
4. Select **Enable** or **Disable** for the **Redirect HTTP to HTTPS** setting as necessary.
5. Click **Next**.

   You see a confirmation message.
6. Click **OK**.

Parent topic: Configuring SSL/TLS Communication

Related tasks

Accessing the Web Config Utility

Configuring a Server Certificate for the Product

You can configure a server certificate for your product.

1. Access Web Config and select the **Network Security** tab.
2. Under **SSL/TLS**, select **Certificate**.
3. Select one of the following options:
   - **CA-signed Certificate**: Select **Import** if you have obtained a CA-signed certificate. Choose the file to import and click **OK**.
   - **Self-signed Certificate**: Select **Update** if you have not obtained a CA (Certificate Authority)-signed certificate and want the product to generate a self-signed certificate.

4. Click **Next**.

   You see a confirmation message.

5. Click **OK**.

Parent topic: Configuring SSL/TLS Communication

Related tasks

Accessing the Web Config Utility

Configuring IPsec/IP Filtering

Follow the instructions in these sections to configure IPsec/IP traffic filtering using Web Config.

About IPsec/IP Filtering
Configuring the Default IPsec/IP Filtering Policy
Configuring the Group IPsec/IP Filtering Policies
IPsec/IP Filtering Policy Settings
IPsec/IP Filtering Configuration Examples
Configuring an IPsec/IP Filtering Certificate

Parent topic: Using Your Product on a Secure Network

About IPsec/IP Filtering

You can filter traffic to the product over the network based on IP address, service, and port by configuring a default policy that applies to every user or group connecting to the product. For control of individual users or user groups, you can configure group policies.

Note: IPsec is supported only by computers running Windows Vista or later, or Windows Server 2008 or later.

Parent topic: Configuring IPsec/IP Filtering

Configuring the Default IPsec/IP Filtering Policy

You can configure the default policy for IPsec/IP traffic filtering using Web Config.

1. Access Web Config and select the **Network Security** tab.
2. Under **IPsec/IP Filtering**, select **Basic**.
3. Select **Enable** to enable IPsec/IP filtering.
4. Select the filtering options you want to use for the default policy.

5. Click **Next**.

   You see a confirmation message.

6. Click **OK**.

Parent topic: Configuring IPsec/IP Filtering

Related tasks

Accessing the Web Config Utility

Configuring the Group IPsec/IP Filtering Policies

You can configure group policies for IPsec/IP traffic filtering using Web Config.

1. Access Web Config and select the **Network Security** tab.
2. Under **IPsec/IP Filtering**, select **Basic**.
3. Click a tab number for the policy number you want to configure.
4. Select the **Enable this Group Policy** checkbox.
5. Select the filtering options you want to use for this group policy.
6. Click **Next**.

   You see a confirmation message.

7. Click **OK**.
8. If you want to configure additional group policies, click the next tab number and repeat the configuration steps as necessary.

Parent topic: Configuring IPsec/IP Filtering

Related tasks

Accessing the Web Config Utility

IPsec/IP Filtering Policy Settings

Default Policy Settings

Setting	Options/Description
Access Control	**Permit Access** to permit IP packets to pass through **Refuse Access** to prevent IP packets from passing through **IPsec** to permit IPsec packets to pass through

Setting	Options/Description
IKE Version	Select the version of the Internet Key Exchange (IKE) protocol (**IKEv1** or **IKEv2**) that matches your network environment
Authentication Method	Select an authentication method, or select **Certificate** if you have imported a CA-signed certificate
Pre-Shared Key	If necessary, enter a pre-shared key between 1 and 127 characters long
Confirm Pre-Shared Key	Confirm the pre-shared key you entered
ID Type	If you selected **IKEv2** as the **IKE Version** setting, select the ID type from the list.
ID	If you selected **IKEv2** as the **IKE Version** setting, enter the necessary ID information
Encapsulation	If you selected **IPsec** as the **Access Control** option, select one of these encapsulation modes: **Transport Mode**: if you are using the product on the same LAN; IP packets of layer 4 or later are encrypted **Tunnel Mode**: if you are using the product on an Internet-capable network, such as IPsec-VPN; the header and data of IP packets are encrypted
Remote Gateway(Tunnel Mode)	If you selected **Tunnel Mode** as the **Encapsulation** option, enter a gateway address between 1 and 39 characters long
Security Protocol	If you selected **IPsec** as the **Access Control** option, select one of these security protocols: **ESP**: to ensure the integrity of authentication and data, and encrypt data **AH**: to ensure the integrity of authentication and data; if data encryption is prohibited, you can use IPsec
Algorithm Settings	Select the encryption algorithm settings for the security protocol you selected

Group Policy Settings

Setting	Options/Description
Access Control	**Permit Access** to permit IP packets to pass through **Refuse Access** to prevent IP packets from passing through **IPsec** to permit IPsec packets to pass through
Local Address(Scanner)	Select an IPv4 or IPv6 address that matches your network environment; if the IP address is assigned automatically, select **Use auto-obtained IPv4 address**
Remote Address(Host)	Enter the device's IP address (between 0 and 43 characters long) to control access, or leave blank to control all addresses; if the IP address is assigned automatically, such as by DHCP, the connection may be unavailable, so configure a static address instead
Method of Choosing Port	Select the method you want to used for specifying ports
Service Name	If you selected **Service Name** as the **Method of Choosing Port** option, select a service name option here; see the next table for more information
Transport Protocol	If you selected **Port Number** as the **Method of Choosing Port** option, select one of these encapsulation modes: **Any Protocol** **TCP** **UDP** **ICMPv4** See the Group Policy Guidelines table for more information.
Local Port	If you selected **Port Number** as the **Method of Choosing Port** option, and **TCP** or **UDP** for the **Transport Protocol** option, enter the port numbers that control receiving packets (up to 10 ports), separated by commas, for example **25,80,143,5220**; leave this setting blank to control all ports; see the next table for more information

Setting	Options/Description
Remote Port	If you selected **Port Number** as the **Method of Choosing Port** option, and **TCP** or **UDP** for the **Transport Protocol** option, enter the port numbers that control sending packets (up to 10 ports), separated by commas, for example **25,80,143,5220**; leave this setting blank to control all ports; see the next table for more information
IKE Version	Select **IKEv1** or **IKEv2** depending on the device that the product is connected to
Authentication Method	If you selected **IPsec** as the **Access Control** option, select an authentication method here
Pre-Shared Key	If you selected **Pre-Shared Key** as the **Authentication Method** option, enter a pre-shared key between 1 and 127 characters long here and in the **Confirm Pre-Shared Key** field
ID Type	If you selected **IKEv2** as the **IKE Version** setting, select the ID type from the list
ID	If you selected **IKEv2** as the **IKE Version** setting, enter the necessary ID information
Encapsulation	If you selected **IPsec** as the **Access Control** option, select one of these encapsulation modes: **Transport Mode**: if you are using the product on the same LAN; IP packets of layer 4 or later are encrypted **Tunnel Mode**: if you are using the product on an Internet-capable network, such as IPsec-VPN; the header and data of IP packets are encrypted
Remote Gateway(Tunnel Mode)	If you selected **Tunnel Mode** as the **Encapsulation** option, enter a gateway address between 1 and 39 characters long

Setting	Options/Description
Security Protocol	If you selected **IPsec** as the **Access Control** option, select one of these security protocols: **ESP**: to ensure the integrity of authentication and data, and encrypt data **AH**: to ensure the integrity of authentication and data; if data encryption is prohibited, you can use IPsec
Algorithm Settings	Select the encryption algorithm settings for the security protocol you selected

Combinations of Local Address (Scanner) and Remote Address (Host) on Group Policy

	Setting of Local Address (Scanner)		
Setting of Remote Address (Host)	**IPv4**	**IPv6**[2]	**Any addresses**[3]
IPv4[1]	Yes	—	Yes
IPv6[1, 2]	—	Yes	Yes
Blank	Yes	Yes	Yes

[1] If you selected **IPsec** as the **Access Control** option, you cannot specify a prefix length

[2] If you selected **IPsec** as the **Access Control** option, you can select a link-local address (fe80::), but the group policy will be disabled.

[3] You cannot use IPv6 link-local addresses.

Group Policy Guidelines

Service name	Protocol type	Local/Remote port number	Controls these operations
Any	—	—	All services
ENPC	UDP	3289/Any port	Searching for a product from applications such as Epson Device Admin and the scanner driver

Service name	Protocol type	Local/Remote port number	Controls these operations
SNMP	UDP	161/Any port	Acquiring and configuring MIB from applications such as Epson Device Admin and the scanner driver
WSD	TCP	Any port/5357	Controlling WSD
WS-Discovery	UDP	3702/Any port	Searching for a product from WSD
Network Scan	TCP	1865/Any port	Forwarding scan data from Epson ScanSmart
Network Push Scan	TCP	Any port/2968	Acquiring job information on push scanning from Epson ScanSmart
Network Push Scan Discovery	UDP	2968/Any port	Searching for a computer from scanner
HTTP (Local)	TCP	80/Any port	Forwarding Web Config and WSD data to a HTTP or HTTPS server
HTTPS (Local)	TCP	443/Any port	
HTTP (Remote)	TCP	Any port/80	Firmware update and root certificate update on a HTTP or HTTPS client
HTTPS (Remote)	TCP	Any port/443	

Parent topic: Configuring IPsec/IP Filtering

IPsec/IP Filtering Configuration Examples

You can configure IPsec and IP filtering in a variety of ways, as shown in the examples here.

Receiving IPsec Packets Only

Use this example only for configuring a default policy.

- **IPsec/IP Filtering**: **Enable**
- **Access Control**: **IPsec**
- **Authentication Method**: **Pre-Shared Key**
- **Pre-Shared Key**: Enter a key up to 127 characters long

Receiving Scanning Data and Scanner Settings

Use this example to allow communication of scanning data and scanner settings from specified services.

Default policy:

- **IPsec/IP Filtering**: **Enable**
- **Access Control**: **Refuse Access**

Group policy:

- **Enable this Group Policy**: Check the box to enable
- **Access Control**: **Permit Access**
- **Remote Address(Host)**: Client IP address
- **Method of Choosing Port**: **Service Name**
- **Service Name**: Select **ENPC**, **SNMP**, **HTTP (Local)**, **HTTPS (Local)**, and **Network Scan**

Receiving Access from a Specified IP Address only

In these examples, the client will be able to access and configure the product in any policy configuration.

Default policy:

- **IPsec/IP Filtering**: **Enable**
- **Access Control**: **Refuse Access**

Group policy:

- **Enable this Group Policy**: Check the box to enable
- **Access Control**: **Permit Access**
- **Remote Address (Host)**: Administrator's client IP address

Note: Regardless of policy configuration, the client will be able to access and configure the scanner.

Parent topic: Configuring IPsec/IP Filtering

Configuring an IPsec/IP Filtering Certificate

You can configure a certificate for IPsec/IP traffic filtering using Web Config.

1. Access Web Config and select the **Network Security** tab.
2. Under **IPsec/IP Filtering**, select **Client Certificate**.
3. Click **Import** to add a new client certificate and enter any necessary settings.
4. Click **OK**.

Parent topic: Configuring IPsec/IP Filtering

Related tasks

Accessing the Web Config Utility

Connecting the Product to an IEEE 802.1X Network

Follow the instructions in these sections to connect the product to an IEEE 802.1X network using Web Config.

Configuring an IEEE 802.1X Network

IEEE 802.1X Network Settings

Configuring a Certificate for an IEEE 802.1X Network

Parent topic: Using Your Product on a Secure Network

Configuring an IEEE 802.1X Network

If your product supports IEEE 802.1X, you can use it on a network with authentication provided by a RADIUS server with a hub as an authenticator using Web Config.

1. Access Web Config and select the **Network Security** tab.
2. Under **IEEE802.1X**, select **Basic**.
3. Select the IEEE 802.1X setting options you want to use. To use the product on a Wi-Fi network, click **Wi-Fi Setup** and select or enter an SSID.
4. Click **Next**.

   You see a confirmation message.
5. Click **OK**.

Parent topic: Connecting the Product to an IEEE 802.1X Network

Related tasks

Accessing the Web Config Utility

IEEE 802.1X Network Settings

You can configure these IEEE 802.1X network settings in Web Config.

Setting	Options/Description
IEEE802.1X (Wi-Fi)	Displays the IEEE802.1X (Wi-Fi) connection status
Connection Method	Displays the current network connection method

Setting	Options/Description
EAP Type	Select one of these authentication methods for connections between the product and a RADIUS server: **EAP-TLS** or **PEAP-TLS**: You must obtain and import a CA-signed certificate **PEAP/MSCHAPv2** or **EAP-TTLS**: You must configure a password
User ID	Enter an ID between 1 and 128 ASCII characters for authentication on a RADIUS server
Password	Enter a password between 1 and 128 ASCII characters for authentication of the product. If you are using Windows as a RADIUS server, enter up to 127 ASCII characters.
Confirm Password	Enter the authentication password again
Server ID	Enter a server ID between 1 and 128 ASCII characters for authentication on a specified RADIUS server; server ID is verified in the "subject/subjectAltName" field of a server certificate sent from the RADIUS server
Certificate Validation	Select a valid certificate regardless of the authentication method; import the certificate using the **CA Certificate** option
Anonymous Name	If you selected **EAP-TTLS**, **PEAP-TLS** or **PEAP/MSCHAPv2** as the **Authentication Method** setting, you can configure an anonymous name between 1 and 128 ASCII characters instead of a user ID for phase 1 of a PEAP authentication
Encryption Strength	Select one of the following encryption strengths: **High** for AES256/3DES **Middle** for AES256/3DES/AES128/RC4

Parent topic: Connecting the Product to an IEEE 802.1X Network

Configuring a Certificate for an IEEE 802.1X Network

If your product supports IEEE 802.1X, you can configure a certificate for the network using Web Config.

1. Access Web Config and select the **Network Security** tab.
2. Under **IEEE802.1X**, select **Client Certificate**.

3. Click **Import** to add a new client certificate.

   Note: If you have already imported a certificate published by a Certification Authority, you can copy the certificate and use it in IEEE802.1X. To copy, select the certificate from **Copy From**, and then click **Copy**.

4. Click **OK**.

Parent topic: Connecting the Product to an IEEE 802.1X Network

Related tasks

Accessing the Web Config Utility

Using Epson Device Admin Configuration Software

Epson Device Admin is a multifunctional application that allows you to manage devices on a network.

With Windows, you can discover and monitor remote devices and use configuration templates to apply unified settings to multiple scanners on a network, making it suitable for installing and managing multiple scanners. See the Epson Device Admin help for instructions.

To install Epson Device Admin, download the software from the support page at epson.com/support (U.S.), epson.ca/support (Canada), or latin.epson.com/support (Latin America) and follow the on-screen instructions.

Parent topic: Using Your Product on a Secure Network

Registering an Email Server

If you want to send a scanned file by email, you need to register the email server first. You can select settings for the email server using Web Config.

Note: Before registering the email server, make sure the product is connected to the network. If you are using an Internet-based email server, check the setting information from the provider or website.

Note: You can also select email server settings from the control panel (**Settings** > **Network Settings** > **Advanced** > **Email Server** > **Server Settings**)

1. Access Web Config.
2. Select the **Network** tab.
3. Select **Email Server** > **Basic**.

4. Select an authentication method, then select the settings you want to use. Contact your internet service provider if necessary to confirm the authentication method for the email server.
5. Select **Proceed** to save your settings.
6. Select **Close** to exit.

Email Server Settings
Enabling SMTP AUTH in Exchange Online
Setting Up OAuth 2.0 Authentication
Checking an Email Server Connection
Mail Server Connection Test Messages

Parent topic: Administering Your Product

Email Server Settings

You can configure these email server settings in Web Config.

Setting	Options/Description
Authentication Method	Select the authentication method that matches your email server **Note:** If you are using Microsoft Exchange Online, the previous Basic Authentication method has been discontinued and SMTP authentication (SMTP AUTH) has been disabled by default. You will need to use the **OAuth2** authentication method. If you use the email sending and email notification functions of the product, configure the email server settings to use **OAuth2** authentication. You should also enable SMTP AUTH in Exchange Online.
Email service	If you select **OAuth2** as the **Authentication Method**, select an email service from the drop-down list. Click **Sign In** and then follow the on-screen instructions to sign in to the email service. **Note:** For personal use, select Outlook.com.
Authenticated Account	Enter the authenticated account name from 1 to 255 characters long in ASCII

Setting	Options/Description
Authenticated Password	Enter the authenticated password from 1 to 70 characters long in ASCII using A-Z, a-z, 0-9, and these characters: ! # $ % ' * + - . / = ? ^ _ { ! } ~ @ **Note:** You may be required to use an App password rather than your email login password. Check with your email service provider.
Sender's Email Address	Enter the sender's email address from 1 to 255 characters long in ASCII; do not use a period (.) as the first character or use these characters: ( ) < > [ ] ;
SMTP Server Address	Enter the SMTP server address from 1 to 255 characters long using A-Z, a-z, 0-9, and "-" in IPv4 or FQDN format
SMTP Server Port Number	Enter the SMTP server port number between 1 and 65535
Secure Connection	Select the security method for the email server; available choices depend on the **Authentication Method** setting
Certificate Validation (Web Config only)	Enable checking for a valid certificate; recommended value is **Enable**
POP3 Server Address	Enter the POP server address from 1 to 255 characters long using A-Z, a-z, 0-9, and "-" in IPv4 or FQDN format
POP3 Server Port Number	Enter the POP server port number between 1 and 65535

Parent topic: Registering an Email Server

Related tasks

Enabling SMTP AUTH in Exchange Online
Setting Up OAuth 2.0 Authentication

Enabling SMTP AUTH in Exchange Online

Enable SMTP AUTH in Exchange Online if you want to use the product's email sending and notification functions.

Note: For detailed instructions, see the Microsoft Learn site.

1. In the Exchange admin center, disable **security defaults** for the entire organization and then enable SMTP AUTH.
2. In the Microsoft 365 admin center, enable SMTP AUTH for the product administrator's mailbox.

Parent topic: Registering an Email Server

Setting Up OAuth 2.0 Authentication

You can set up OAuth 2.0 authentication for your email server using Web Config.

1. Log in to the Web Config interface as an administrator.
2. Select the **Network** tab, then select **Email Server** > **Basic**.
3. Select **OAuth2** as the **Authentication Method**.
4. Select **Microsoft Exchange Online** as the **Email service**.

   Note: For personal use, select Outlook.com.

5. Click **Sign In**, then click **Sign in with Microsoft** on the window that appears.

   When you are signed in, an authentication code is displayed.
6. Copy the authentication code, then click on the URL below it.
7. On the authentication code window, enter the code you copied, and then click **Next**.
8. On the Microsoft sign-in window, enter your account details and then click **Next**.

   Note: To sign in, your account must have the **Cloud Application Administrator** role assigned.

9. Enter your password and click **Sign In**.

   Note: Additional steps may be required. Follow the on-screen instructions.

   A confirmation screen appears.
10. Select **Consent on behalf of organization** and then click **Accept**.

    When authentication is complete, a sign-in message is displayed and you can close the browser screen. You can check the sign-in status in Web Config (**Network** tab > **Email Server** > **Basic**). When the status shows as **Signed in**, account information for OAuth 2.0 authentication is displayed.
11. Click **OK** to send OAuth 2.0 authentication information to the product.

Parent topic: Registering an Email Server

Checking an Email Server Connection

You can check an email server connection using the product's control panel or Web Config.

1. Choose one of the following to open the connection test menu:
   - **Using Web Config:** Select the **Network tab** > **Email Server** > **Connection Test** > **Start**.
   - **Using the product's control panel:** Select **Settings** > **Network Settings** > **Advanced** > **Email Server** > **Connection Check**.

   Note: You may need to log in as an administrator.

   The mail server connection test is started.
2. Check the test results.
   If the connection test is successful, a confirmation message displays. If an error message displays, follow the instructions to clear the error.

Parent topic: Registering an Email Server

Mail Server Connection Test Messages

The table below lists some common causes for mail server connection test messages.

Note: You may be required to use an App password rather than your email login password. Check with your email service provider.

Message	Cause
SMTP server communication error. Check the following. - Network Settings	• The scanner is not connected to a network • The SMTP server is down • The network connection is disconnected while communicating with the SMTP server • Data received is incomplete

Message	Cause
POP3 server communication error. Check the following. - Network Settings	• The scanner is not connected to a network • The POP3 server is down • The network connection is disconnected while communicating with the POP3 server • Data received is incomplete
An error occurred while connecting to SMTP server. Check the followings. - SMTP Server Address - DNS Server	• Connecting to a DNS server failed • Name resolution for an SMTP server failed
An error occurred while connecting to POP3 server. Check the followings. - POP3 Server Address - DNS Server	• Connecting to a DNS server failed • Name resolution for a POP3 server failed
SMTP server authentication error. Check the followings. - Authentication Method - Authenticated Account - Authenticated Password	SMTP server authentication failed
POP3 server authentication error. Check the followings. - Authentication Method - Authenticated Account - Authenticated Password	POP3 server authentication failed
Unsupported communication method. Check the followings. - SMTP Server Address - SMTP Server Port Number	Communication method contained unsupported protocols
Connection to SMTP server failed. Change Secure Connection to None.	An SMTP mismatch occurred between a server and a client, or the server does not support SMTP secure connection (SSL connection).
Connection to SMTP server failed. Change Secure Connection to SSL/TLS.	An SMTP mismatch occurred between a server and a client, or the server requested to use an SSL/TLS connection for an SMTP secure connection

Message	Cause
Connection to SMTP server failed. Change Secure Connection to STARTTLS.	An SMTP mismatch occurred between a server and a client, or the server requested to use a STARTTLS connection for an SMTP secure connection
The connection is untrusted. Check the following. - Date and Time	The product's date and time settings are incorrect, or the certificate has expired
The connection is untrusted. Check the following. - CA Certificate	The scanner does not have a root certificate corresponding to the server or a CA Certificate has not been imported
The connection is not secured.	The obtained certificate is damaged
SMTP server authentication failed. Change Authentication Method to SMTP-AUTH.	An authentication method mismatch occurred between a server and a client; the server supports SMTP AUTH.
SMTP server authentication failed. Change Authentication Method to POP before SMTP.	An authentication method mismatch occurred between a server and a client; the server does not support SMTP AUTH
Sender's Email Address is incorrect. Change to the email address for your email service.	The specified sender's email address is incorrect
Cannot access the product until processing is complete.	The scanner is busy

Parent topic: Registering an Email Server

Solving Problems

Check these sections for solutions to problems you may have using your product.

Note: Your product may differ from the images in this guide, but the instructions are the same unless otherwise noted.

Product Status Messages
Solving Scanning Problems
Solving Network Scanning Problems
Solving Scanned Image Quality Problems
Checking Your Applications
Resetting the Epson Scan 2 Settings
Uninstall Your Product Software
Where to Get Help (U.S. and Canada)
Where to Get Help (Latin America)

Product Status Messages

You can often diagnose problems with your product by checking the messages on its LCD screen. You can also press the help button to see help information and how-to instructions on the screen.

Note: If the LCD screen is dark, tap the screen to wake the product from sleep mode.

LCD screen message	Condition/solution
Feeding stopped to protect originals. Open the scanner cover and remove them.	Try the following: • Remove the original from inside the scanner and check the condition of the original. • This product uses two different positions for scanning, depending on the original being scanned. Check the link below to see which position is appropriate for your original.

LCD screen message	Condition/solution
The original jammed. Open the scanner cover to remove the original.	Try the following: • Remove the original from inside the scanner and check the condition of the original. • This product uses two different positions for scanning, depending on the original being scanned. Check the link below to see which position is appropriate for your original.
Check the following if a computer is not found. - Connection between the scanner and the computer (USB or network) - Installation of the necessary software - Power supply to the computer - Firewall and security software settings - Search again. See your documentation for more details.	Try the following: • Make sure the product is connected correctly and the latest version of Epson ScanSmart is installed on your computer. • Make sure the AC adapter is securely connected to the product and an electrical outlet. Check that the outlet is working properly by plugging another electrical device into it. • Check the firewall settings for Epson software. • Make sure the Group setting is the same for the computer and the product. • Search for the computer again.
Inside the scanner may have some stains. Please clean the scanner.	See “Cleaning Inside the Scanner” to clean inside the scanner. If the problem continues to occur after you have performed cleaning, contact Epson support.
The original may be smeared or inside the scanner may have some stains. Remove smears on the original, and then clean inside the scanner.	
The combination of the IP address and the subnet mask is invalid. See your documentation for more details.	There is a problem with the network connection to your product. Check the solutions in this guide.
RECOVERY MODE	A firmware update has failed. Connect your product using a USB cable and try updating the firmware again. If you still receive this error message, contact Epson for support.

Parent topic: Solving Problems

Related references

Where to Get Help (U.S. and Canada)
Where to Get Help (Latin America)

Related tasks

Replacing the Rollers
Setting a Password and Locking the Control Panel
Cleaning Inside Your Product
Accessing the Web Config Utility
Creating a Shared Network Folder

Solving Scanning Problems

Check these solutions if you have problems scanning with your product.

Note: For solutions when using the Epson ScanSmart software, see the Epson ScanSmart help utility.

Product Does Not Turn On or Turns Off Unexpectedly
Scanner Button Does Not Work as Expected
Scanning Software Does Not Operate Correctly
Cannot Start Epson Scan 2
Paper Feeding Problems
Paper Jam Problems
Paper Protection Does Not Work Correctly
Scanning is Slow
Cannot Send Scans to a Cloud Service
Cannot Send Scans to an Email

Parent topic: Solving Problems

Product Does Not Turn On or Turns Off Unexpectedly

If the product does not turn on or if it turns off unexpectedly, try these solutions:

- Make sure the AC adapter is securely connected to the product and to a working electrical outlet.
- If the product turns off unexpectedly, you may need to adjust the **Sleep Timer** and **Power Off Timer** settings on the control panel.

Parent topic: Solving Scanning Problems

Related tasks

Changing the Sleep Timer Settings

Changing the Power Off Timer Settings

Scanner Button Does Not Work as Expected

If the scanner button does not start the correct program or perform the correct action, try these solutions:

- If you installed the Epson ScanSmart software, pressing the start button on your scanner starts Epson ScanSmart, over a USB or wireless connection. See the help information in Epson ScanSmart for detailed information.
- Make sure your scanner is turned on and any interface cables are securely connected at both ends.
- Check the USB cable connection between the computer and scanner.
- Check that the correct scanner is selected using the Epson Scan 2 Utility.
- In Windows, be sure that the scanner is listed under **Imaging Devices** in the Device Manager.
- Check the status of the lights and make sure the scanner is ready to scan.
- If you are connecting your scanner over a network, make sure the Wi-Fi connection is working correctly. Try turning the wireless router off and on again, and make sure the router cable is securely connected.
- If you are connecting your scanner via USB, use only the USB cable that came with the scanner. Make sure it is connected directly to your computer and not to a USB hub.
- If you are connecting your scanner via USB, make sure the USB cable between the computer and scanner is connected in the correct orientation.

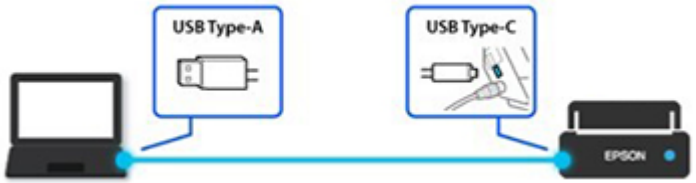

- For Wi-Fi scanning, confirm that your scanner is paired with your computer. Open Epson ScanSmart, click **Change** and select the scanner you want to use.
- Make sure your scanner is not connected to another computer via USB. A USB connection takes priority over a Wi-Fi connection.

- Make sure Epson ScanSmart and Epson Scan 2 are installed correctly. Reinstall the software, if necessary.

Parent topic: Solving Scanning Problems

Scanning Software Does Not Operate Correctly

If your scanning software does not operate correctly, try these solutions:

- Make sure your computer has adequate memory and meets the system requirements for your operating system.
- Make sure your computer is not running in a power-saving mode, such as sleep or standby. If so, wake your system and restart your scanning software.
- Make sure the product is turned on.
- Make sure the scanning software is installed.
- Make sure the connection between the product and your computer is secure.
- If you upgraded your operating system but did not reinstall your scanning software, try reinstalling it.
- In Windows, be sure that the product is listed under **Imaging Devices** in the Device Manager.
- Check that the correct product is selected using the Epson Scan 2 Utility.
- Connect the product directly to the computer. The product may not work properly when connected through a USB hub/switch.
- If you are using a TWAIN-compliant program, make sure that the correct product is selected as the **Scanner** or **Source** setting.
- Make sure the **PC Connection via USB** setting is not disabled on the control panel.
- Check that the Wi-Fi connection is working correctly. Try turning the wireless router off and on.
- Make sure another computer is not connected to the product using a USB cable. A USB connection takes priority over a Wi-Fi connection. If another computer is connected by USB, disconnect it.
- If you are using a Mac computer, make sure you select the network that has priority on it.

Parent topic: Solving Scanning Problems

Related concepts

Uninstall Your Product Software

Related references

Windows System Requirements

Mac System Requirements

Cannot Start Epson Scan 2

If you cannot start Epson Scan 2, try these solutions:

- Make sure your scanner appears in the Epson Scan 2 Utility.
- Make sure to use the USB cable that came with the scanner.
- Make sure your scanner is turned on and any interface cables are securely connected at both ends.
- Make sure your computer is not running in a power-saving mode, such as sleep or standby. If so, wake your system and restart Epson Scan 2.
- If you connected the scanner using a USB cable, make sure it is connected directly to your computer or through only one USB hub.
- If you are connecting your scanner via USB, make sure the USB cable between the computer and scanner is connected in the correct orientation.

- If you are using the scanner over a network, make sure your scanner is displayed in the Scanner Settings screen. If your scanner is not displayed in the list, click **Enable Editing** and click **Add**. Add your scanner on the Add Network Scanner screen.
- Make sure the **PC Connection via USB** setting is not disabled on the control panel.
- If you upgraded your operating system but did not reinstall Epson Scan 2, try reinstalling it.
- If you are using a TWAIN-compliant program, make sure that the correct product is selected as the **Scanner** or **Source** setting.
- Make sure the ready light stops flashing, indicating that the scanner is ready to scan.

Parent topic: Solving Scanning Problems

Paper Feeding Problems

If you have problems feeding originals in your product, try these solutions:

- If there is a jammed original inside the scanner, open the scanner cover or vertical path cover and remove the original.
- Make sure the scanner is in the correct position for the type of original being scanned. See the link at the end of this section to see which position is appropriate for your original.
  - When scanning multiple standard-size originals, scan in the vertical path position. If the scanner is in the straight path position, pull the scanner position selector to the right and tilt the scanner forward to place it in the vertical path position.

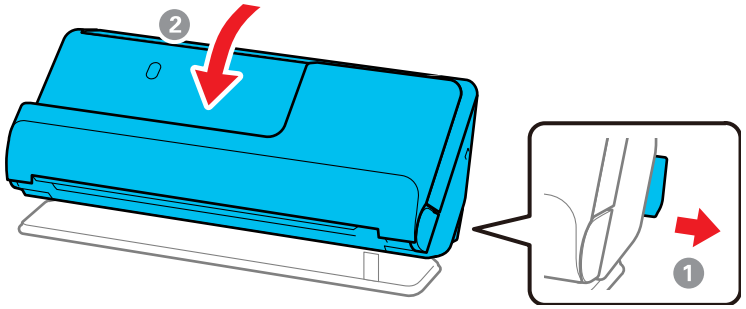

  - When scanning in the straight path position, load only one original at a time. If the scanner is in the vertical path position, pull the scanner position selector to the right and tilt the scanner backward to place it in the straight path position.

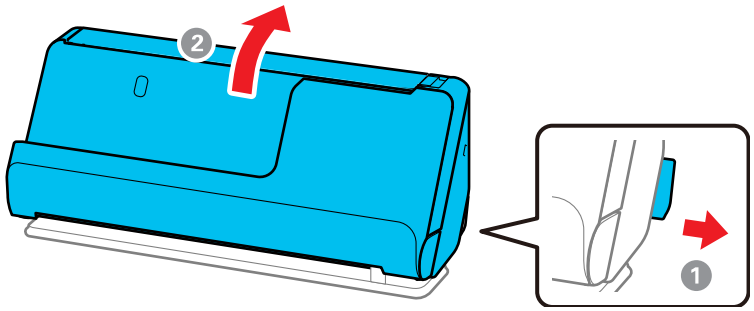

- If multiple pages feed at once, try the following:
  - Remove the originals, fan the edges to separate the sheets, if necessary, and reload them.
  - Load fewer originals at a time.
  - Load only originals that meet the specifications for your product.
  - Clean inside the product and clean the rollers. If the rollers were previously removed for cleaning, make sure they were properly reinstalled.
  - Check the number of sheets scanned by the pickup roller. If the number of scans exceeds the pickup roller's service life (50,000 sheets), replace the roller assembly kit with a new one. Even if the number of scans does not exceed the pickup roller's service life, we recommend replacing the roller assembly kit with a new one if the surface of the roller is worn out.

    Note: You can check the number of sheets scanned by the pickup roller on the control panel or in the Epson Scan 2 Utility. To check from the control panel, select **Scanner Maintenance** > **Roller Replacement** on the home screen, and then check the number of scans displayed under Roller Replacement. To check from the Epson Scan 2 Utility, start the Epson Scan 2 Utility, click the **Counter** tab, and then check the **Number of Scans** under Roller Assembly Kit.

  - If multiple feed errors occur frequently, it is possible that dust or dirt that has accumulated around the ultrasonic sensors is being mistakenly detected as a multiple feed error. If dust has accumulated around the ultrasonic sensors, clean the ultrasonic sensors.
  - Use **Automatic Feeding Mode** in Epson Scan 2 and scan originals one at a time.
  - If you see a double feed error in the Epson Scan 2 window, start Epson Scan 2, select the **Main Settings** tab, select the **Detect Double Feed** setting, and select **Off**.

Parent topic: Solving Scanning Problems

Related references

Optional Accessories and Replacement Parts
Original Document Specifications
Plastic and Laminated Card Specifications
Special Original Specifications
Scanner Positions

Related tasks

Cleaning Inside Your Product
Replacing the Rollers

Related topics

Loading Originals

Paper Jam Problems

If an original is jammed in the scanner, clear the jam according to the procedure for the scanner position.

Note: Do not change the scanner position while scanning, otherwise the original will get jammed.

Note: You cannot scan long paper (15.5 inches (393.7 mm) or more) from the control panel. Epson Smart Panel also does not support scanning originals more than 15.5 inches (393.7 mm) in length.

Vertical Path Position

1. Turn off your product.
2. Remove all originals from the input tray.
3. Open the vertical path cover.

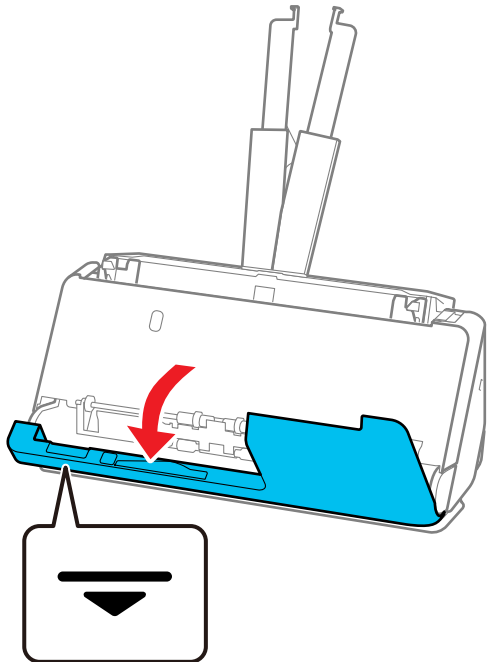

4. Pull down the cover open lever and open the scanner cover.

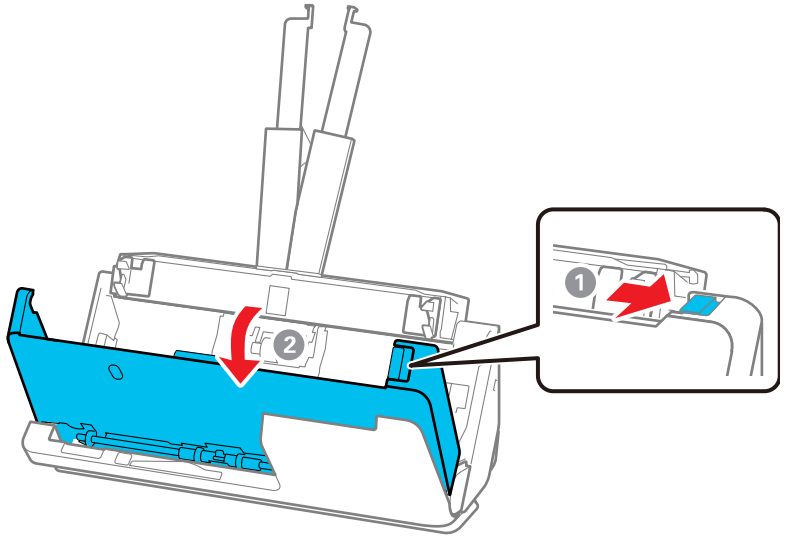

5. Gently pull out any jammed originals from inside the product.

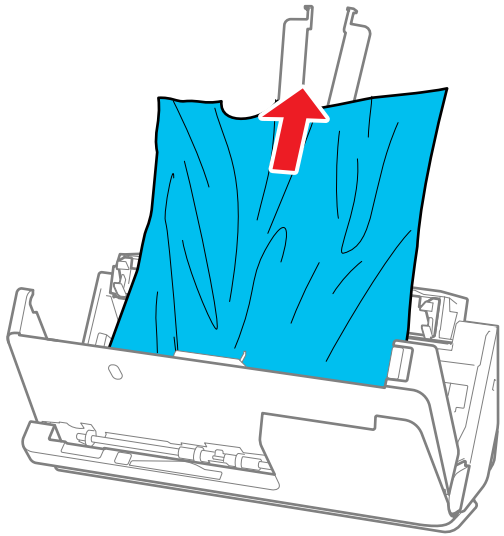

6. If you cannot pull originals straight up, carefully pull out any jammed originals from the output tray in the direction of the arrow.

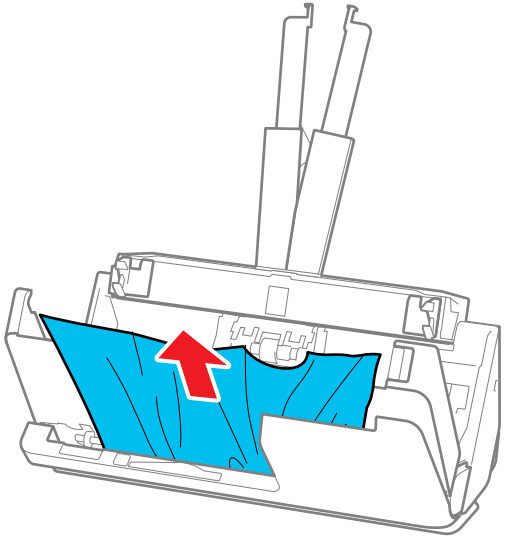

Note: Make sure there is no paper inside the scanner.

7. Close the scanner cover with both hands. Then, close the vertical path cover.

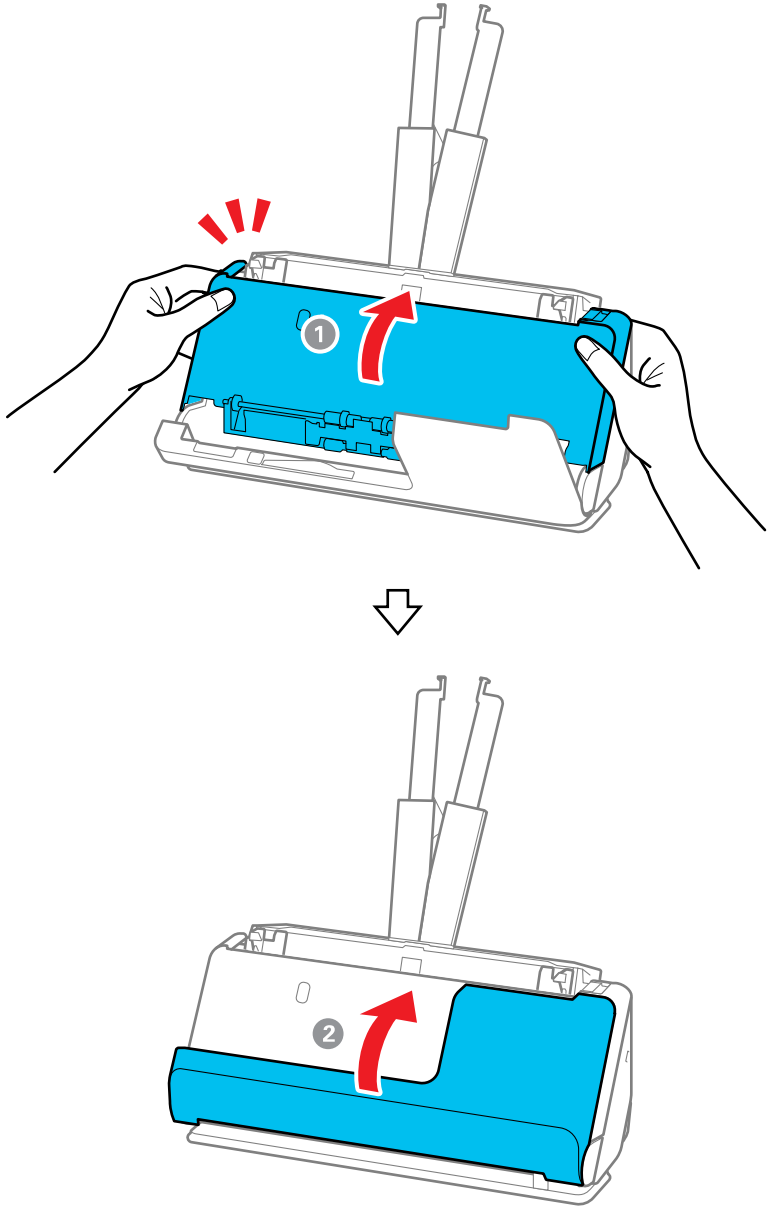

Caution: Before restarting scanning, make sure that the scanner is stationary. If the scanner is not stationary, it could cause the original to jam.

8. Carefully follow all loading instructions when you reload originals.

Straight Path Position

1. Turn off your product.
2. Remove all originals from the input tray.
3. Pull the lever to open the scanner cover.

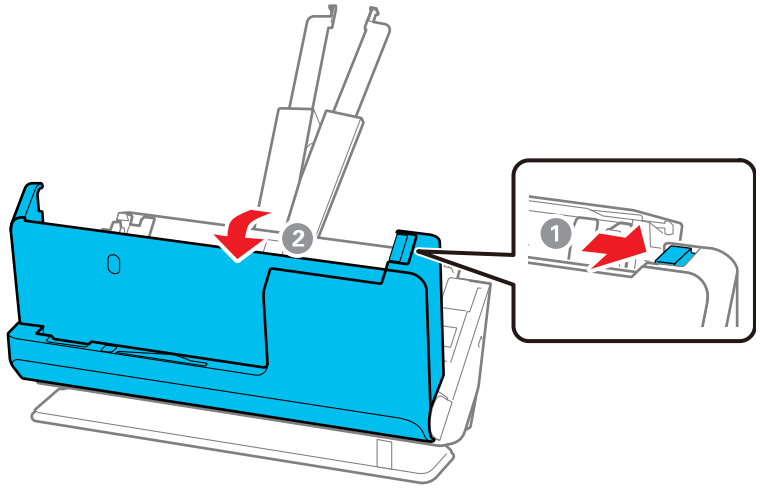

4. Gently pull out any jammed originals from inside the product.

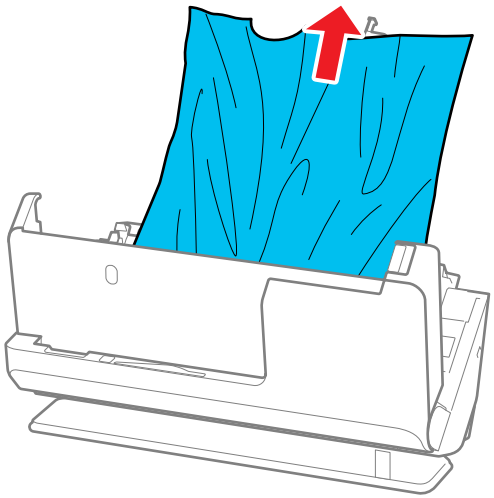

5. If you cannot pull originals straight up, carefully pull out any jammed originals from the output slot in the direction of the arrow.

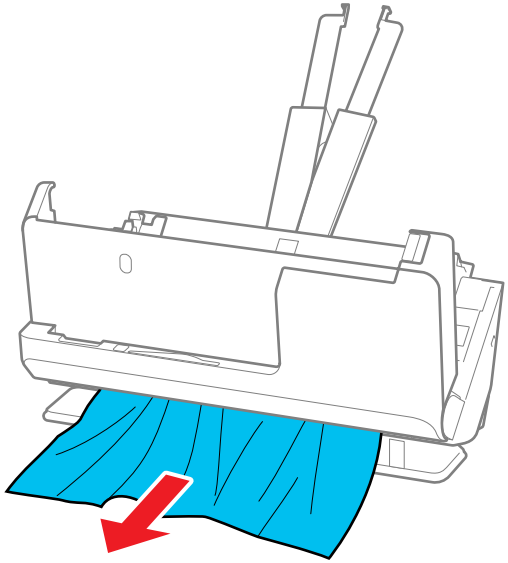

Note: Make sure there is no paper inside the scanner.

6. Close the scanner cover with both hands.

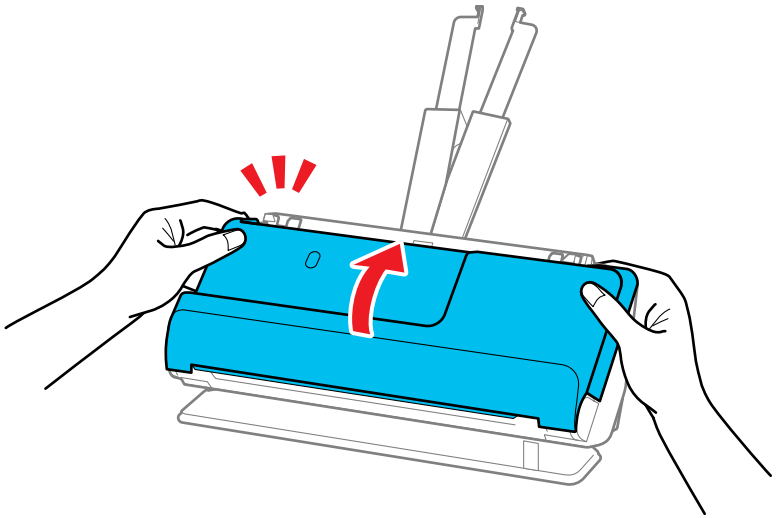

Important: Before restarting scanning, make sure that the scanner is stationary. If the scanner is not stationary, it could cause the original to jam.

7. Carefully follow all loading instructions when you reload originals.

If originals jam in the product frequently, try the following:

- For originals with folds or that are curled, flatten the original before loading.

- When loading originals with a mixture of different sizes, load the originals with the side to be scanned facing up and in descending order of paper size with the widest at the back and the narrowest at the center of the input tray. Next, slide the edge guides to align them with the widest originals.

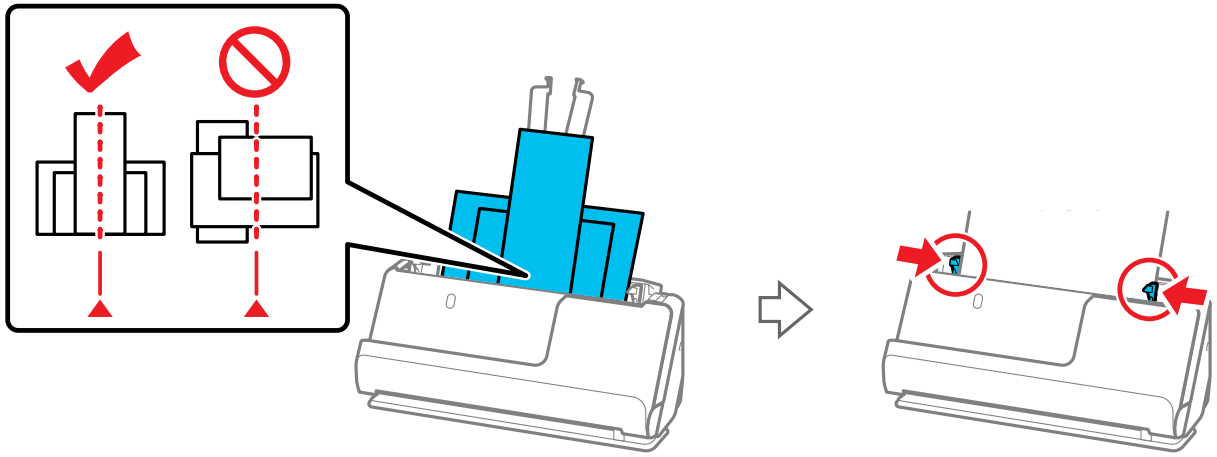

If the problem is not solved, try scanning the originals at each size separately, or scan the originals one by one. Align the edge guides to the width of the originals each time you load them.

- Clean inside the product and clean the rollers. If the rollers were previously removed for cleaning, make sure they were properly reinstalled.
- Check the number of sheets scanned by the pickup roller. If the number of scans exceeds the pickup roller's service life (50,000 sheets), replace the roller assembly kit with a new one. Even if the number of scans does not exceed the pickup roller's service life, we recommend replacing the roller assembly kit with a new one if the surface of the roller is worn out.

  Note: You can check the number of sheets scanned by the pickup roller on the control panel or in the Epson Scan 2 Utility. To check from the control panel, select **Scanner Maintenance** > **Roller Replacement** on the home screen, and then check the number of scans displayed under Roller Replacement. To check from the Epson Scan 2 Utility, start the Epson Scan 2 Utility, click the **Counter** tab, and then check the **Number of Scans** under Roller Assembly Kit.

- After scanning, remove the original from the output tray or the output slot.

Parent topic: Solving Scanning Problems

Related references

Original Document Specifications
Plastic and Laminated Card Specifications
Special Original Specifications
Scanner Positions
Where to Get Help (U.S. and Canada)
Where to Get Help (Latin America)

Related tasks

Cleaning Inside Your Product
Replacing the Rollers

Related topics

Loading Originals

Paper Protection Does Not Work Correctly

To reduce damage to the original, the Paper Protection feature immediately stops scanning if a paper feed error is detected. If the Paper Protection feature does not work correctly, try these solutions:

- If your scanned original is damaged, make sure that the Paper Protection feature is enabled. Increase the detection level, if necessary.
- If misdetection occurs frequently, lower the Paper Protection detection level.
- Set the Paper Protection feature to **Off** on the LCD screen (**Settings** > **Scanner Settings** > **Paper Protection** > **Off**) when scanning plastic cards and thick originals.
- Make sure the sensors are clear of paper dust and debris.
- When scanning multiple originals, make sure that the leading edges of the documents are aligned. If the leading edges of the documents are not aligned, they may be mistakenly detected as a paper feed error even if they are scanned correctly.
- Make sure you align the edge guides with the original to avoid scanning at an angle.

Parent topic: Solving Scanning Problems

Scanning is Slow

If scanning becomes slow, try these solutions:

- Scan your original at a lower resolution, if possible.

- Make sure your system meets the requirements for your operating system. If you are scanning a high-resolution image, you may need more than the minimum requirements. If necessary, increase your system's memory or reduce the resolution.
- The scanning speed may be reduced depending on the image adjustment features in Epson Scan 2.
- If scanning becomes slower after scanning continuously with the ADF for a long time, the scanner may have automatically slowed down to protect the scanner mechanism from overheating or becoming damaged. Let the scanner rest with the power on for 30 minutes, then try scanning again.
- If you are running virus protection or other security software, exclude the TWAIN.log files from monitoring or set the TWAIN.log file as read only. See your virus protection or security software instructions for details. The TWAIN.log file is saved in C:\Users\(user name)\AppData\Local\Temp.

  Note: You may need to unhide system folders to view files in that location.

- If you are scanning over a network, factors such as interference, network traffic, or weak signal strength may affect your scanning speed.
- Computers with USB 3.0 (SuperSpeed) or USB 2.0 (Hi-Speed) ports can scan faster than those with USB 1.1 ports. If you are using a USB 3.0 or 2.0 port with the scanner, make sure it meets the system requirements.

Parent topic: Solving Scanning Problems

Related references

Windows System Requirements
Mac System Requirements

Cannot Send Scans to a Cloud Service

If you cannot send a scan to a cloud service, try these solutions:

- Make sure your computer is connected to the internet.
- Make sure the login information you entered for the cloud service is correct.
- Make sure the cloud service is not down for system maintenance. Check the cloud service website for more information.

Parent topic: Solving Scanning Problems

Cannot Send Scans to an Email

If you cannot send a scan to an email address, try these solutions:

- Make sure the destination email address is working.

- Make sure the email server settings are correct.
- Contact the email server administrator to make sure the server is running.
- If you are using Microsoft Exchange, check the following:
  - If you are unable to sign in, your Entra ID may be blocked by a conditional access policy. Check your conditional access policies with Entra ID. For detailed instructions, see the "Microsoft Learn" site.
  - If you cannot send email and you see a message telling you to sign in to your email service and contact your administrator, check Web Config for the current status.

    Select the **Network** tab > **Email Server** > **Basic**.

    If the email server status is **Signed in**, the sign-in information may not have been saved to the product. Click **OK** to send the setting information to the product.

    If there is no status and the **Sign In** button is displayed, sign in.
  - The cloud service or email service may not be connected, or the connection has expired. Connect to the cloud service or e-mail service.
  - You may need to sign in to the cloud service again. Sign in to the cloud service.
  - An expiration message may be displayed if you signed in and a certain period of time has passed without using the email sending function. If a product using OAuth 2.0 authentication has not been used for an extended period, or the email-sending function has not been used, the access token and refresh token become invalid. The administrator should sign in again.

Parent topic: Solving Scanning Problems

Related tasks

Setting Up OAuth 2.0 Authentication

Solving Network Scanning Problems

Check these solutions if you have problems scanning over a network.

Cannot Scan Over a Network
Product Cannot Connect to a Wireless Router or Access Point
Cannot Access Web Config
Forgot the Administrator Password
Network Software Cannot Find Product on a Network
Cannot Save a Scan to a Shared Folder Over a Network
Cannot Access the Product After Configuring IEEE 802.1X

Parent topic: Solving Problems

Cannot Scan Over a Network

If you have problems scanning over a network, try these solutions:

- Check the scanner's control panel for error messages. If you have the notification email set when the events occur, you can promptly learn the status.
- Make sure the computer and scanner are connected to the same network (or network subnet/VLAN).
- Move the scanner and computer or smart device closer to the access point.
- If you cannot scan from the start button on the scanner, make sure you restarted your computer after installing the scanning software. Also start Epson Scan 2 before scanning with the start button.
- If you installed the Epson ScanSmart software, pressing the start button on your scanner automatically starts Epson ScanSmart via a USB connection. For instructions on scanning with Epson ScanSmart, see the help information in the software.
- If you are scanning a large original at a high resolution, a network communication error may occur. Try scanning again at a lower resolution.
- If network communication was interrupted while starting Epson Scan 2 or Epson ScanSmart, exit Epson Scan 2 or Epson ScanSmart, wait a few seconds, and restart the program. If Epson Scan 2 or Epson ScanSmart cannot restart, turn off your scanner, turn it back on, and try starting the program again.
- Check the network connection setting in the Epson Scan 2 Utility.
- You may need to disable the firewall and any anti-virus software on your wireless router or access point.
- If you see the message "Network product is not available: currently being used by user", there may be a communication error between the scanner and computer. Restart the scanner.
- If the Firewall function is active, the scanner may not be discovered by the Epson Scan 2 Utility. Open the Epson Scan 2 Utility, enter the IP address for your scanner, and click **Add**.
- If the scanner and computer cannot communicate and are connected to the same network (subnet or VLAN), check if your router uses the privacy separator and disable it, if necessary. Follow the instructions in your router documentation to disable the privacy separator.

Parent topic: Solving Network Scanning Problems

Related tasks

Starting a Scan Using the Product Control Panel
Starting a Scan from a Smartphone or Tablet
Starting a Scan from a Scanning Program
Determining the Product's IP Address

Product Cannot Connect to a Wireless Router or Access Point

If your product has trouble finding or connecting to a wireless router or access point, try these solutions:

- If you are connecting the product via Wi-Fi Protected Setup (WPS), make sure you activate WPS on your product within 2 minutes of activating WPS discovery mode on the router by pressing the WPS button or enabling the WPS setting in your router firmware.
- Make sure to place your product within contact range of your router or access point. Avoid placing your product near a microwave oven, 2.4 GHz cordless phone, or large metal object, such as a filing cabinet.
- Verify that your router or access point is operating correctly by connecting to it from your computer or another device.
- You may need to temporarily disable your firewall and any anti-virus software on your wireless router or access point. Then try scanning again. You can also unblock your product driver or network address in your firewall or anti-virus software.
- Check to see if access restrictions, such as MAC address filtering, are set on the router or access point. If access restrictions are set, add your product's MAC address to your router's address list. To obtain your product's MAC address, check the label on the back or bottom of your product. Then follow the instructions in your router or access point documentation to add the address to the list.
- If your router or access point does not broadcast its network name (SSID), follow the instructions that came with your product to enter your wireless network name manually.
- If your router or access point has security enabled, determine the kind of security it is using and any required password or passphrase for connection. Then make sure to enter the exact WEP key or WPA passphrase correctly.
- Check if your computer is restricting the available wireless channels. If so, verify that your wireless access point is using one of the usable channels and change to a usable channel, if necessary.
- The product may not be able to communicate with a computer with both Ethernet and Wi-Fi adapters enabled. Disable all network interfaces except for the interface connected to the product.
- Turn off all of the devices you are trying to connect to the network. Wait about 10 seconds, and then turn on the devices in the following order; wireless router, computer or smart device, scanner. Move

the scanner and computer or smart device closer to the wireless router, and then try to make network settings again.

- If you are using multiple wireless routers at the same time or the wireless router has multiple SSIDs and devices are connected to different SSIDs, you cannot connect to the wireless router. Connect the computer or smart device to the same SSID as the scanner.
- Enable the DHCP function on the router or access point.
- Check that the product's IP address is set correctly.
- Make sure Epson ScanSmart is installed.
- If you cannot start scanning from a smart device, make sure the product and smart device are connected correctly. Use the Epson Smart Panel to check the connection status for the smart device and the product.

Parent topic: Solving Network Scanning Problems

Related concepts

Wi-Fi Direct (Simple AP) Mode Setup

Related tasks

Selecting Wireless Network Settings from the Control Panel
Using the Epson Smart Panel Mobile App

Related topics

Wi-Fi Networking

Cannot Access Web Config

If you cannot access Web Config on your product, try these solutions:

- Make sure your product is turned on and connected to your network using the correct IP address. Verify the connection using your product control panel.
- Make sure your browser supports the Encryption Strength for SSL/TLS. If you selected **High** as the **Encryption Strength** setting in Web Config, your browser must support AES (256-bit) or 3DES (168-bit) encryption. Check your browser's encryption support or select a different **Encryption Strength** option.
- Check to see if your CA-signed Certificate is expired. If there is a problem with the expiration date of the certificate, "The certificate has expired" is displayed when connecting to Web Config with SSL/TLS communication (https). If the message appears before its expiration date, make sure that the scanner's date is configured correctly.

- If the common name of the certificate and the scanner do not match, the message "The name of the security certificate does not match" is displayed when accessing Web Config using SSL/TLS communication (https). For Self-signed Certificate, update the certificate. For CA-signed Certificate, take the certificate again for the scanner.
- If you are using a proxy server with your product, configure the browser's proxy settings as follows:
  - **Windows 11**: Click , then search for **Proxy Settings** and select it. Scroll down and set **Use a proxy server** to **On**.
  - **Windows 10**: Click > **Settings** > **Network and Internet** > **Proxy**. Scroll down and set **Use a proxy server** to **On**. Select **Don't use proxy server for local (Intranet) addresses**.
  - **Windows 8.x**: Navigate to the **Apps** screen and select **PC Settings** > **Network** > **Proxy**. Scroll down and set **Use a proxy server** to **On**. Select **Don't use proxy server for local (Intranet) addresses**.
  - **Windows (other versions)**: Click or **Start** and select **Control Panel** > **Network and Internet** > **Internet Options** > **Connections** > **LAN settings** > **Proxy server** > **Bypass proxy server for local addresses**.
  - **Mac**: Select **System Preferences** > **Network** > **Advanced** > **Proxies**. Register the local address under **Bypass proxy settings for these Hosts & Domains**. For example, 192.168.1.*: Local address 192.168.1.XXX, subnet mask 255.255.255.0.

Parent topic: Solving Network Scanning Problems

Forgot the Administrator Password

If you forget the password or inadvertently set it, contact Epson for assistance.

Note: In most cases, the default password is the product's serial number. If there is a "Password" label attached to the back of the product, enter the 8-digit number shown on the label. If there is no "Password" label attached, enter the serial number on the label attached to the back of the product for the initial administrator password. If you restore the product to default settings, the administrator password resets to the initial setting.

Parent topic: Solving Network Scanning Problems

Related tasks

Setting a Password and Locking the Control Panel

Network Software Cannot Find Product on a Network

If EpsonNet Setup cannot find your product on a network, try these solutions:

- Make sure your product is turned on and connected to your network. Verify the connection using your product control panel.
- Check if your network name (SSID) contains non-ASCII characters. Your product cannot display non-ASCII characters.
- Make sure your product is not connected to a guest network.
- If necessary, reinstall your software and try running EpsonNet Setup again:
  1. Reset your product's network settings to their factory defaults.
  2. **Windows only:** Uninstall your product software.
  3. Restart your router following the instructions in your router documentation.

     Note: If you are reading these instructions online, you will lose your Internet connection when you restart your router, so note the next step before restarting it.

  4. Download your product software from the Epson website using the instructions on the *Start Here* sheet.
- If you have replaced your router, reinstall your product software to connect to the new router.
- Check to see if your wireless router or access point has an enabled Privacy Separator function that is preventing detection of your device over the network. See your router or access point documentation for instructions on disabling the Privacy Separator function.

Parent topic: Solving Network Scanning Problems

Related concepts

Uninstall Your Product Software
Wi-Fi Direct (Simple AP) Mode Setup

Cannot Save a Scan to a Shared Folder Over a Network

If you cannot save a scan to a shared folder when scanning over a network, or saving takes a very long time, try these solutions:

- Make sure that the computer is turned on and is not running in a power-saving mode, such as sleep or standby.
- Make sure you created a shared folder on your computer (Windows).

- Make sure the network folder does not already contain a file of the same name. If so, rename the file and try again.
- Make sure you added the correct user permissions.
- If you registered the shared folder path to your product's control panel contact list or entered the path manually to scan, make sure you used the correct path.
- Make sure the address in your product's control panel contact list and the address of the shared folder are the same.
- Make sure the user name and password are correct on the computer and product's control panel Contacts list. Also, make sure that the password has not expired.
- If you are using a laptop and the IP address is set to DHCP, the IP address may change when reconnecting to the network. Obtain the IP address again.
- Make sure your network type is not set to **Public network**. You cannot scan to a shared folder when using a public network. Set the forward settings for each port.
- If saving your scan to a shared folder takes a very long time, make sure the DNS setting and the DNS domain name are correct. Contact your network administrator for instructions.
- Temporarily disable the computer's Firewall and security software. If this clears the error, check the settings in the security software.
- Make sure the access rights for the user in the contacts list are added on the Sharing tab and Security tab of the shared folder's properties. Also, the permissions for the user should be set to "allowed".
- Make sure there is enough disk space on the computer. Increase the free space on the computer, if necessary.

Parent topic: Solving Network Scanning Problems

Related tasks

Creating a Shared Network Folder
Registering Contacts for Email, Network, or FTP Scanning - Control Panel
Registering Contacts for Email, Network, or FTP Scanning - Web Config

Cannot Access the Product After Configuring IEEE 802.1X

If you cannot access the product after configuring it for IEEE 802.1X, disable IEEE 802.1X and Wi-Fi using the product control panel. Then connect the product to a computer and configure IEEE 802.1X using Web Config again.

Parent topic: Solving Network Scanning Problems

Related tasks
Disabling Wi-Fi Features

Solving Scanned Image Quality Problems

Check these sections if a scanned image on your computer screen has a quality problem.

Note: For solutions when using the Epson ScanSmart software, see the Epson ScanSmart help utility.

Back of Original Image Appears in Scanned Image
Image is Distorted or Blurry
Characters are not Recognized During Conversion to Editable Text (OCR)
Ripple Patterns Appear in an Image
Uneven Colors Appear in Scanned Image
Spots or Lines Appear in All Scanned Images
Scanned Image is Cropped
Cannot Solve Problems in the Scanned Image

Parent topic: Solving Problems

Back of Original Image Appears in Scanned Image

If an image from the back of a thin original appears in your scanned image, make sure you selected the correct Image Type setting for your original and select the **Text Enhancement** setting in Epson Scan 2. You can also select the **Remove Background** setting in Epson Scan 2.

Note: If you select **Color** as the Image Type setting, you can change the level from Standard to High to remove more of the background.

If the image is still visible, you can also try setting a lower level for **Edge Enhancement** or a higher level for **Noise Reduction**.

Parent topic: Solving Scanned Image Quality Problems

Image is Distorted or Blurry

If a scanned image appears distorted or blurry, try these solutions:

- Make sure your original is not wrinkled or warped. This may prevent the original from laying flat when passing over the scanner sensors.

- Do not move your original or your scanner during scanning.
- Your product will not operate properly while tilted at an angle. Place your product on a flat, stable surface that extends beyond its base in all directions.
- Select **Settings** > **Scanner Settings** > **Scan Settings** in Epson ScanSmart, adjust the following settings, and try scanning again:
  - On the **Main Settings** tab, try increasing the **Resolution** setting.
  - On the **Main Settings** tab, make sure you select the correct **Image Type** for your original.
  - If the **Image Type** is set to **Black & White**, adjust the **Threshold** setting on the **Advanced Settings** tab. (The **Image Option** must be set to **None**.)
  - If the **Image Type** is set to **Color** or **Grayscale**, select the **Unsharp Mask** setting on the **Advanced Settings** tab. Change the **Text Enhancement** setting to **High**.

Parent topic: Solving Scanned Image Quality Problems

Characters are not Recognized During Conversion to Editable Text (OCR)

If characters in your scanned images are not recognized during OCR conversion, try these solutions:

- Make sure your original is loaded straight on your product.
- Use an original with clear text.
- Adjust these Epson Scan 2 settings (if available) and try scanning again:
  - Select the correct **Image Type** setting.
  - If the **Image Type** is set to **Black & White**, select **Text Enhancement**. If the Image Type is set to **Color** or **Grayscale**, change the **Text Enhancement** setting to **High**.
  - If the **Image Type** is set to **Black & White**, adjust the **Threshold** setting.
  - Set the **Image Type** to **Grayscale**.
- Set the scanning resolution between 200 and 600 dpi.
- If the original document is in landscape mode, set the **Rotate** setting to **Auto** in Epson Scan 2.
- If you are using OCR software, check the manual for any additional adjustments.
- Scan thermal paper receipts as soon as possible. They may deteriorate due to age or friction.
- When saving to Microsoft Office or Searchable PDF files, check that the correct languages are selected. Check the language in each save setting window.

Parent topic: Solving Scanned Image Quality Problems

Ripple Patterns Appear in an Image

You may see a ripple pattern (called a moiré) in scanned images of printed documents. This is caused by interference from differing pitches in the scanner's screen and your original's halftone screen. To reduce this effect, select **Settings** > **Scanner Settings** > **Scan Settings** in Epson ScanSmart and try adjusting these settings and scanning again:

- On the **Main Settings** tab, try decreasing the **Resolution** setting.
- On the **Advanced Settings** tab, select the **Descreening** setting.

Parent topic: Solving Scanned Image Quality Problems

Uneven Colors Appear in Scanned Image

If colors in your scanned images look uneven, try these solutions:

- Change the orientation of the product so that light is not falling directly on the front of the product.
- Move the product to a location where it will not be subjected to strong light sources or direct sunlight.

Parent topic: Solving Scanned Image Quality Problems

Spots or Lines Appear in All Scanned Images

If spots or lines appear in all your scanned images, try the following solutions:

- Clean the rollers and glass scanning surfaces inside your product using a genuine Epson cleaning kit or a soft, moist cloth.
- Remove any dirt from your original.
- Enable the **Detect Glass Dirt** setting in the Epson Scan 2 Utility. You can also enable Glass Dirt Detection on the product's control panel (**Settings** > **Scanner Settings** > **Glass Dirt Detection** > **On-Low** or **On-High**).

  Note: If glass dirt detection does not work correctly, adjust the setting. If the glass dirt alert screen appears after cleaning the inside of the product, check the glass surface again (scratches on the glass may be detected as a glass dirt).

Parent topic: Solving Scanned Image Quality Problems

Related tasks

Cleaning Inside Your Product

Scanned Image is Cropped

If the edges of a scanned image are cropped, try the following solutions:

- Select **Auto Detect** as the Document Size setting in Epson Scan 2.
- If the document size is not detected correctly using the **Auto Detect** setting, select the size of your original from the **Document Size** list.

  Note: If the size you want to scan is not on the list, select **Customize** to create it manually (Windows only).

- In Epson Scan 2, select the **Main Settings** tab. Select **Document Size** > **Settings** and adjust the cropping area shown in the **Crop Margins for Size "Auto"** setting.

Parent topic: Solving Scanned Image Quality Problems

Cannot Solve Problems in the Scanned Image

If you have tried all of the solutions and have not solved the problem, initialize the scanner driver (Epson Scan 2) settings using Epson Scan 2 Utility.

Note: Epson Scan 2 Utility is one of the applications supplied with the scanner software.

1. Start Epson Scan 2 Utility
   - **Windows 11**: Click , then search for **Epson Scan 2 Utility** and select it.
   - **Windows 10**: Click , and select **EPSON** > **Epson Scan 2 Utility**.
   - **Windows 8.x**: Enter the application name in the search charm, and then select the displayed icon.
   - **Windows 7**: Click the start button, and then select **All Programs** or **Programs** > **EPSON** > **Epson Scan 2** > **Epson Scan 2 Utility**.
   - **Mac OS**: Select **Go** > **Applications** > **Epson Software** > **Epson Scan 2 Utility**.
2. Select the **Other** tab.
3. Click **Reset**.

   Note: If initialization does not solve the problem, uninstall and re-install the scanner driver (Epson Scan 2).

Parent topic: Solving Scanned Image Quality Problems

Checking Your Applications

To use the functions described in this *User's Guide*, you need to install the following applications.

- Epson ScanSmart
- Scanner driver (Epson Scan 2)
- EPSON Software Updater
- **Note:** When you set up the scanner using the installer, the scanner driver (Epson Scan 2) is automatically installed.

Checking Your Applications for Windows
Checking Your Applications for Mac OS
Updating Applications and Firmware

Parent topic: Solving Problems

Checking Your Applications for Windows

1. Open the Control Panel:
   - **Windows 11**: Click , then search for **Control Panel** and select it.
   - **Windows 10**: Click , then select **Windows System** > **Control Panel**.
   - **Windows 8.x**: Select **Desktop** > **Settings** > **Control Panel**.
   - **Windows 7**: Click the start button, and then select **Control Panel**.
2. Select **Uninstall a program** in **Programs.**
3. Check the list of currently installed applications.

Parent topic: Checking Your Applications

Checking Your Applications for Mac OS

1. Select **Go** > **Applications** > **Epson Software**.
2. Check the list of currently installed applications.

Parent topic: Checking Your Applications

Updating Applications and Firmware

You may be able to solve certain problems and improve or add functions by updating the applications and firmware to the latest version.

Caution: Do not turn off the computer or the scanner while updating.

1. Make sure that the scanner and the computer are connected, and that the computer is connected to the internet.
2. Start **EPSON Software Updater** and update the applications or firmware.

- **Windows 11**: Click , then search for **EPSON Software Updater** and select it.
- **Windows 10**: Click , then select **Epson Software** > **EPSON Software Updater**.
- **Windows 8.x**: Enter the application name in the search charm, and then select the displayed icon.
- **Windows 7**: Click the start button, and then select **All Programs** or **Programs** > **Epson Software** > **EPSON Software Updater**.
- **Mac OS**: Select **Finder** > **Go** > **Applications** > **Epson Software** > **EPSON Software Updater**.

Note: If you cannot find the application you want to update in the list, you cannot update the application using the EPSON Software Updater. Check for the latest versions of the applications on the Epson support website.

Updating the Firmware using the Control Panel

If the product can be connected to the Internet, you can also update the product's firmware using the control panel and set the product to regularly check for firmware updates and notify you if any are available.

1. Select **Settings** on the home screen.
2. Select **System Administration** > **Firmware Update** > **Update**.

   Note: Select **Notification** > **On** to set the scanner to regularly check for available firmware updates.

3. Check the message displayed on the screen and start searching for available updates.
4. If a message is displayed on the LCD screen informing you that a firmware update is available, follow the on-screen instructions to start the update.

Caution: Do not turn off or unplug the product until the update is complete; otherwise, a malfunction may occur.

Note: If the firmware update is unsuccessful, the product does not start up normally and "Recovery Mode" is displayed on the LCD screen the next time the product is turned on. In this case, you need to update the firmware again using a computer. Connect the product to the computer with a USB cable and download the latest firmware from the Epson website. Then follow the on-screen instructions to update the firmware. (You cannot update the firmware over a network connection if "Recovery Mode" is still displayed on the LCD screen.)

Updating Firmware without Connecting to the Internet

You can download the product's firmware from the Epson website on the computer, and then connect the product and the computer via USB cable to update the firmware. If you cannot update over the network, try this method.

Note: Make sure Epson Scan 2 is installed on your computer. If Epson Scan 2 is not installed, download the software from the Epson website and install it on your computer.

1. Download the latest firmware from the Epson website.
2. Connect your product to the computer using a USB cable.
3. Double-click the downloaded .exe file to start the Epson Firmware Updater.
4. Follow the on-screen instructions to update the firmware.

Updating the Firmware Using Web Config

To update the firmware using Web Config, select the **Device Management** tab > **Firmware Update**, check the displayed message, and then click **Start**.

Parent topic: Checking Your Applications

Related references

Where to Get Help (U.S. and Canada)
Where to Get Help (Latin America)

Resetting the Epson Scan 2 Settings

If you continue to experience image quality problems after trying all possible solutions, you may need to reset the Epson Scan 2 settings using the Epson Scan 2 Utility.

1. Do one of the following to start the Epson Scan 2 Utility:
   - **Windows 11**: Click , then search for **Epson Scan 2 Utility** and select it.
   - **Windows 10**: Click > **EPSON** > **Epson Scan 2 Utility**.
   - **Windows 8.x**: Navigate to the **Apps** screen and select **Epson Scan 2 Utility**.
   - **Windows 7**: Click , and select **All Programs**. Select **EPSON** > **Epson Scan 2** > **Epson Scan 2 Utility**.
   - **Mac:** Open the **Applications** folder, open the **Epson Software** folder, and select **Epson Scan 2 Utility**.
2. Click the **Other** tab.
3. Click **Reset** and confirm your choice.

Note: If resetting the Epson Scan 2 settings does not solve your problem, uninstall your scanner software and re-install it.

Parent topic: Solving Problems

Uninstall Your Product Software

If you have a problem that requires you to uninstall and re-install your software, follow the instructions for your operating system.

Uninstalling Product Software - Windows
Uninstalling Product Software - Mac

Parent topic: Solving Problems

Uninstalling Product Software - Windows

You can uninstall and then re-install your product software to solve certain problems.

1. Exit all applications currently running on your computer.
2. Turn off the product.
3. Disconnect any interface cables.

4. Do the following to uninstall each of your scanning software programs and follow any on-screen instructions:
   - **Windows 11**: Click , then search for **Settings** and select it. Select **Apps** or **System** > **Apps & features**. Then select the program you want to uninstall and select **Uninstall**.
   - **Windows 10**: Click and select (Settings) > **Apps** > **Apps & features**. Select the product software program and click **Uninstall**.
   - **Windows 8.x**: Navigate to the **Apps** screen and select **Control Panel** > **Programs** > **Programs and Features**. Select the product software program and click **Uninstall/Change**.
   - **Windows 7**: Open the Windows **Control Panel** utility. Select **Programs and Features**. (In Classic view, select **Programs** and click **Uninstall a program**.) Select the product software program and click **Uninstall/Change**.
5. Restart your computer, then see the *Start Here* sheet to re-install your software.

Note: If you find that re-installing your product software does not solve a problem, contact Epson.

Parent topic: Uninstall Your Product Software

Uninstalling Product Software - Mac

In most cases, you do not need to uninstall your product software before re-installing it. However, you can download the Uninstaller utility from the Epson support website to uninstall your product software as described here.

1. To download the Uninstaller utility, visit epson.com/support (U.S.), epson.ca/support (Canada), or latin.epson.com/support (Latin America) and select your product.
2. Follow the instructions on the screen to install the Uninstaller utility.
3. Quit all applications currently running on your Mac.
4. Double-click the **Uninstaller** icon.
5. In the Epson Uninstaller screen, select the checkbox for each software program you want to uninstall.
6. Click **Uninstall**.
7. Follow the on-screen instructions to uninstall the software.
8. To reinstall your product software, see the *Start Here* sheet for instructions.

Note: If you find that re-installing your product software does not solve a problem, contact Epson. If you cannot find the application you want to uninstall in the application list, you cannot uninstall using the Uninstaller. In this situation, select **Go** > **Applications** > **Epson Software**, select the application you want to uninstall, and then drag it to the trash icon.

Parent topic: Uninstall Your Product Software

Where to Get Help (U.S. and Canada)

If you need to contact Epson for technical support services, use the following support options.

Internet Support

Visit Epson's support website at epson.com/support (U.S.) or epson.ca/support (Canada) and select your product for solutions to common problems with your product. You can download utilities and documentation, get FAQs and troubleshooting advice, or e-mail Epson with your questions.

Speak to a Support Representative

Before you call Epson for support, please have the following information ready:

- Product name
- Product serial number (located on a label on the product)
- Proof of purchase (such as a store receipt) and date of purchase
- Computer configuration
- Description of the problem

Then call:

- U.S.: (562) 276-4382, 7 AM to 4 PM, Pacific Time, Monday through Friday
- Canada: (905) 709-3839, 7 AM to 4 PM, Pacific Time, Monday through Friday

Days and hours of support are subject to change without notice. Toll or long distance charges may apply.

Note: For help using any other software on your system, see the documentation for that software for technical support.

Purchase Supplies and Accessories

You can purchase genuine Epson accessories at epson.com (U.S. sales) or epson.ca (Canadian sales). You can also purchase accessories from an Epson authorized reseller. To find the nearest one, call 800-GO-EPSON (800-463-7766) in the U.S. or 800-807-7766 in Canada.

Parent topic: Solving Problems

Where to Get Help (Latin America)

If you need to contact Epson for technical support services, use the following support options.

Internet Support

Visit Epson's support website at latin.epson.com/support and select your product for solutions to common problems with your product. You can download utilities and documentation, get FAQs and troubleshooting advice, or e-mail Epson with your questions.

Speak to a Support Representative

Before you call Epson for support, please have the following information ready:

- Product name
- Product serial number (located on a label on the product)
- Proof of purchase (such as a store receipt) and date of purchase
- Computer configuration
- Description of the problem

Then call:

Country	Telephone
Argentina	(54 11) 5167-0300 0800-288-37766
Bolivia*	800-100-116
Brazil	State capitals and metropolitan areas: 3004-6627 Other areas: 0800-377-6627 / 0800-EPSONBR
Chile	(56 2) 2484-3400

Country	Telephone
Colombia	Bogota: 601 602-4751 Other cities: 01-8000-915235
Costa Rica	800-377-6627
Dominican Republic*	1-888-760-0068
Ecuador*	1-800-000-044
El Salvador*	800-6570
Guatemala*	1-800-835-0358
Mexico	Mexico City: (52 55) 1323-2052 Other cities: 800-087-1080
Nicaragua*	00-1-800-226-0368
Panama*	00-800-052-1376
Paraguay	009-800-521-0019
Peru	Lima: (51 1) 418-0210 Other cities: 0800-10126
Uruguay	00040-5210067

* Contact your local phone company to call this toll-free number from a mobile phone.

If your country does not appear in the list, contact the sales office in the nearest country. Toll or long distance charges may apply.

Note: For help using any other software on your system, see the documentation for that software for technical support.

Purchase Supplies and Accessories

You can purchase genuine Epson accessories from an Epson authorized reseller. To find the nearest reseller, visit latin.epson.com or call your nearest Epson sales office.

Parent topic: Solving Problems

Technical Specifications

These sections list the technical specifications for your product.

Note: Epson offers a recycling program for end of life Epson products. Please go to this site (U.S.) or this site (Canada) for information on how to return your Epson products for proper disposal.

Windows System Requirements
Mac System Requirements
General Specifications
Dimension Specifications
Electrical Specifications
Environmental Specifications
Network Interface Specifications
Safety and Approvals Specifications

Windows System Requirements

To use your product and its software, your computer should use one of these Microsoft operating systems:

- Windows 11
- Windows 10
- Windows 8.x
- Windows 7

Parent topic: Technical Specifications

Mac System Requirements

To use your product and its software, your Mac should use one of these operating systems:

- macOS 26.x
- macOS 15.x
- macOS 14.x
- macOS 13.x

- macOS 12.x
- macOS 11.x
- macOS 10.15.x
- macOS 10.14.x
- macOS 10.13.x
- macOS 10.12.x
- OS X 10.11.x

Note: Mac OS may not support some applications and features; the UNIX File System (UFS) for Mac OS is not supported and Fast User Switching on Mac OS or later is not supported.

Note: For the latest product software available for your operating system, visit the Epson support site at epson.com/support (U.S.), epson.ca/support (Canada), or latin.epson.com/support (Latin America), select your product, and select **Downloads**.

Parent topic: Technical Specifications

General Specifications

Note: Specifications are subject to change without notice.

Scanner type	Sheet feed, one pass duplex, color
Photoelectric device	CIS
Effective pixels	5100 × 9300 pixels at 600 dpi 2550 × 64500 pixels at 300 dpi
Document size	Maximum: 8.5 × 220 inches (215.9 × 5588 mm) Minimum: 2 × 2 inches (50.8 × 50.8 mm) **Note:** Maximum length may vary depending on the scanning method and resolution.
Paper input	Faceup loading

Paper output	Vertical path position: Facedown ejection Straight path position: Faceup ejection
Paper capacity	20 sheets of paper at 21 lb (80 g/m^2) weight
Scanning resolution	600 dpi (main scan) 600 dpi (sub scan)
Output resolution	50 to 1200 dpi in 1 dpi increments (when scanning with a computer) **Note:** Available resolutions may vary depending on the scanning method.
Color Depth	Color: 30 bits per pixel internal (10 bits per pixel per color) 24 bits per pixel external (8 bits per pixel per color) Grayscale: 10 bits per pixel internal 8 bits per pixel external Black-and-white: 10 bits per pixel internal 1 bit per pixel external
Interface	Hi-speed USB 2.0 Type-C
Light source	RGB LED

Parent topic: Technical Specifications

Dimension Specifications

Height	Vertical path position: 4.9 inches (125 mm) Straight path position: 5 inches (127 mm)
Width	11.7 inches (296 mm)
Depth	Vertical path position: 4.1 inches (104 mm) Straight path position: 5 inches (128 mm)

Weight	Approximately 4.2 lb (1.9 kg)

Note: Dimensions do not include projecting parts.

Parent topic: Technical Specifications

Electrical Specifications

Scanner

Note: Check the label on the product and the AC adapter for voltage information. Power consumption varies depending on operating conditions or whether an option is installed.

Rated DC input power supply voltage	DC 24 V
Rated DC input current	1 A
Power consumption	**USB Connection:** Operating: 10 W (approximate) Ready mode: 4 W (approximate) Sleep mode: 1 W (approximate) Power off mode: 0.1 W (approximate) **Wi-Fi Connection:** Operating: 11 W (approximate) Ready mode: 4.3 W (approximate) Sleep mode: 1.4 W (approximate) Power off mode: 0.1 W (approximate)

AC Adapter

AC adapter model	100 to 240 V model: A461H
Rated input current	1 A
Rated frequency range	50 to 60 Hz

Rated output power supply voltage	DC 24 V
Rated output current	1 A

Parent topic: Technical Specifications

Environmental Specifications

Temperature	Operating: 41 to 95 °F (5 to 35 °C)
	Storage: –13 to 140 °F (–25 to 60 °C)
Humidity	Operating: 15 to 80% RH
(non-condensing)	Storage: 15 to 85% RH
Operating conditions	Ordinary office or home conditions

Note: Avoid operating the product in direct sunlight, near a strong light source, or in extremely dusty conditions.

Parent topic: Technical Specifications

Network Interface Specifications

Wi-Fi

Standards	IEEE802.11a/b/g/n/ac; IEEE802.11n available only on the 20 MHz channel
Frequency ranges	IEEE802.11b/g/n: 2.4 GHz
	IEEE802.11a/n/ac: 5 GHz

Wi-Fi channels	2.4 GHz: 1/2/3/4/5/6/7/8/9/10/11/12/13 5 GHz: W52 (36/40/44/48) W53 (52/56/60/64) W56 (100/104/108/112/116/120/124/128/132/136/140/144) W58 (149/153/157/161/165)
Connection modes	Infrastructure mode Wi-Fi Direct (Simple AP); not supported for IEEE802.11b **Note:** Infrastructure and Wi-Fi Direct modes can be used simultaneously.
Maximum radio frequency power transmitted	2400-2483.5 MHz: 20 dBm (EIRP)
Wireless security protocols	WEP (64/128 bit) WPA2-PSK (AES); complies with WPA2 standards with support for WPA/WPA2 Personal WPA3-SAE (AES) WPA2/WPA3-Enterprise **Note:** Wi-Fi Direct supports only WPA2-PSK (AES).

Security Protocol

IEEE802.1X	Connection device must comply with IEEE802.1X IPsec/IP Filtering
SSL/TLS	HTTPS (Server/Client) SMTPS (STARTTLS, SSL/TLS) SNMPv3

Network Features and IPv4/IPv6 Support

Epson ScanSmart	IPv4
Epson Connect (Scan to Cloud)	IPv4
AirPrint	IPv4, IPv6

Parent topic: Technical Specifications

Safety and Approvals Specifications

Scanner

United States	EMC: FCC part 15 Subpart B class B
Canada	EMC: CAN ICES-3 (B)/NMB-3 (B)

AC Adapter (A461H)

United States	Safety: UL60950-1
	EMC: FCC part 15 Subpart B class B
Canada	Safety: CAN/CSA C22.2 No. 60950-1
	EMC: CAN ICES-3 (B)/NMB-3 (B)

This equipment contains the following wireless module:

- Manufacturer: Seiko Epson Corporation.
- Type: J26H005

This product conforms to Part 15 of the FCC Rules and RSS-210 of the IC Rules. Epson cannot accept responsibility for any failure to satisfy the protection requirements resulting from a non-recommended modification of the product. Operation is subject to the following two conditions: (1) this device may not cause harmful interference, and (2) this device must accept any interference received, including interference that may cause undesired operation of the device.

To prevent radio interference to the licensed service, this device is intended to be operated indoors and away from windows to provide maximum shielding. Equipment (or its transmit antenna) that is installed outdoors is subject to licensing.

This equipment complies with FCC/IC radiation exposure limits set forth for an uncontrolled environment and meets the FCC radio frequency (RF) Exposure Guidelines in Supplement C to OET65 and RSS-102 of the IC radio frequency (RF) Exposure rules. This equipment should be installed and operated so that the radiator is kept at least 7.9 inches (20 cm) or more away from a person's body (excluding extremities: hands, wrists, feet and ankles).

Notice for Mexico

Operation is subject to the following two conditions: (1) this device may not cause harmful interference, and (2) this device must accept any interference received, including interference that may cause undesired operation of the device.

Product Model: J441C (ES-C380W)

WLAN Module Model: J26H005

Brand: EPSON

IFT Certification Number: EPEPJ423-16547

Notice for Paraguay

Imported by:

Fastrax, S.A.

Av. Perú esq. Río de Janeiro, Barrios Las Mercedes, Asunción, Paraguay

Imported by:

Sol Control S.R.L.

Av. Gral. Bernardino Caballero 810 esq. Celsa Speratti, Asunción, Paraguay

Notice for Peru

Product Model: ES-C380W (J441C)

Brand: EPSON

This product uses the following WLAN module:

WLAN Module Model: J26H005

FCC ID: BKMFBJ26H005

Product Manufacturer: Seiko Epson Corporation

Address: 3-3-5 Owa Suwa-shi, Nagano-Ken 392-8502, Japan

Parent topic: Technical Specifications

Notices

Check these sections for important notices about your product.

Note: Epson offers a recycling program for end of life Epson products. Please go to this site (U.S.) or this site (Canada) for information on how to return your Epson products for proper disposal.

Important Safety Instructions
Wireless Connection Safety Instructions
Notes on the Administrator Password
Restrictions on Copying
Default Delay Times for Power Management for Epson Products
Binding Arbitration and Class Waiver
Trademarks
Copyright Notice

Important Safety Instructions

Follow these safety instructions when setting up and using the product.

- Read all these instructions, and follow all warnings and instructions marked on the product.
- Place the product close enough to the computer for the interface cable to reach it easily.
- Do not place or store the product outdoors, in a car, near excessive dirt or dust, water, heat sources, or in locations subject to shocks, vibrations, condensation, high temperature or humidity, direct sunlight, strong light sources, or rapid changes in temperature or humidity.
- Do not use with wet hands.
- When connecting this product to a computer or other device with a cable, ensure the correct orientation of the connectors. Each connector has only one correct orientation. Inserting a connector in the wrong orientation may damage both devices connected by the cable.
- Do not insert objects into any opening as they may touch dangerous voltage points or short out parts. Beware of electrical shock hazards.
- Place the product on a flat, stable surface that extends beyond the base of the product in all directions. If you place the product by the wall, leave at least 3.9 inches (10 cm) between the back of the product and the wall.

- After replacing consumable parts, dispose of them correctly following the rules of your local authority. Do not disassemble them.
- Never disassemble, modify, or attempt to repair the product or a product option by yourself except as specifically explained in this guide.

Caution: Radio waves from this product may adversely affect the operation of medical equipment, airplanes, or automatically controlled devices, such as pacemakers, automatic doors, or fire alarms. When using this product near such devices or inside a medical facility, follow the directions from authorized staff members at the facility, and follow all posted warnings and directions on the device to avoid causing an accident.

AC Adapter

- Do not place or store the AC adapter outdoors, in a car, near excessive dirt or dust, water, heat sources, or in locations subject to shocks, vibrations, condensation, high temperature or humidity, direct sunlight, strong light sources, or rapid changes in temperature or humidity.
- Place the product and the AC adapter near an electrical outlet where the adapter can be easily unplugged.
- The AC power cord should be placed to avoid abrasions, cuts, fraying, crimping, and kinking.
- Do not place objects on top of the AC power cord and do not allow the AC adapter or the power cord to be stepped on or run over. Be particularly careful to keep the AC power cord straight at the end and the point where it enters the AC adapter.
- Use only the AC adapter that comes with your product. Using any other adapter could cause fire, electrical shock, or injury.
- Use only the power cord that comes with your product. Use of another cord may cause fires or shock. Do not use the cord with any other equipment.
- The AC adapter is designed for use with the product with which it was included. Do not attempt to use it with other electronic devices unless specified.
- Use only the type of power source indicated on the AC adapter's label, and always supply power directly from a standard domestic electrical outlet with the AC adapter that meets the relevant local safety standards.
- Avoid using outlets on the same circuit as photocopiers or air control systems that regularly switch on and off.
- If you use an extension cord with the product, make sure the total ampere rating of the devices plugged into the extension cord does not exceed the cord's ampere rating. Also, make sure the total

ampere rating of all devices plugged into the wall outlet does not exceed the wall outlet's ampere rating.

- Never disassemble, modify, or attempt to repair the AC adapter by yourself except as specifically explained in the product's guides.
- If damage occurs to the plug, replace the cord set or consult a qualified electrician. If there are fuses in the plug, make sure you replace them with fuses of the correct size and rating.
- Unplug the product and the AC adapter, and refer servicing to qualified service personnel under the following conditions: The AC adapter or plug is damaged; liquid has entered the product or the AC adapter; the product or the AC adapter has been dropped or the case has been damaged; the product or the AC adapter does not operate normally or exhibits a distinct change in performance. (Do not adjust controls that are not covered by the operating instructions.)
- Unplug the product and the AC adapter before cleaning. Clean with a damp cloth only. Do not use liquid or aerosol cleaners.
- If you are not going to use the product for a long period, be sure to unplug the AC adapter from the electrical outlet.

USB

- Use only the USB cable supplied with your product. Using any other USB cable could cause fire, electrical shock, or injury.
- The USB cable is designed for use with the product with which it was included. Do not attempt to use it with other electrical devices unless specified.
- The USB cable should be placed to avoid abrasions, cuts, fraying, crimping, and kinking.
- Do not place objects on top of the USB cable and do not allow the cable to be stepped on or run over. Be particularly careful to keep the USB cable straight at the end.
- If you are not going to use the product for a long period, unplug the USB cable from the computer.
- Unplug the product and the USB cable, and refer servicing to qualified service personnel under the following conditions: Liquid has entered the product; the product has been dropped or the case has been damaged; the product does not operate normally or exhibits a distinct change in performance. (Do not adjust controls that are not covered by the operating instructions.)

LCD Screen

- The LCD screen may have uneven brightness or a few small bright or dark spots. This is normal and does not indicate damage.
- Use only a dry, soft cloth to clean the LCD screen. Do not use liquid or chemical cleansers.

- If the LCD screen is damaged, contact Epson. If the liquid crystal solution gets on your hands, wash them thoroughly with soap and water. If the liquid crystal solution gets into your eyes, flush them immediately with water. If discomfort or vision problems remain after a thorough flushing, see a doctor immediately.
- Do not press too hard on the LCD screen or subject it to heavy impacts.
- Do not use a pointy or sharp object, such as a pen or your fingernail, to operate the LCD screen.
- If the LCD screen chips or cracks, do not touch or attempt to remove the broken pieces; contact Epson for support.
- Do not subject your product to sudden changes in temperature or humidity; this may cause condensation to develop inside the LCD screen and degrade its performance.

Parent topic: Notices

Wireless Connection Safety Instructions

Radio waves from this product may adversely affect the operation of medical equipment or automatically controlled devices, such as pacemakers, automatic doors or fire alarms. When using this product near such devices or inside a medical facility, follow the directions from authorized staff members at the facility, and follow all posted warnings and directions on the device to avoid causing an accident.

Do not connect this product to the internet directly. Connect it to a network protected by a router or firewall.

If you dispose of this product or give it to someone else, make sure to erase all the personal information stored in the product’s memory by selecting **Settings** > **System Administration** > **Restore Default Settings** > **All Settings** on the product control panel.

Parent topic: Notices

Notes on the Administrator Password

You can set an administrator password to prevent unauthorized access or changes to general product settings and network settings stored in the product when connecting to a network.

The default value of the administrator password is printed on the product's label. The label is located on the side, the back, or the bottom, depending on the product. If there is no "Password" label attached, enter the serial number from the label attached to the back of the product for the default administrator password.

You must enter the administrator password when performing the following operations:

- Accessing the advanced settings in Web Config
- Updating your product's firmware from a computer or smart device

- Using applications that can change the product's settings
- Selecting a menu on the control panel that has been locked by an administrator
- Changing or resetting the administrator password

You can change the administrator password from the product's control panel or Web Config. The new password must be 8 to 20 characters long and only contain single-byte alphanumeric characters and symbols.

You can restore the administrator password to the default setting from the product's control panel (**Settings** > **System Administration** > **Restore Default Settings** > **All Settings**) or Web Config. If you have forgotten the password and cannot restore it to the default settings, contact Epson for help.

Note: Resetting the administrator password also resets the user name.

Parent topic: Notices

Related tasks

Setting a Password and Locking the Control Panel
Changing the Administrator Password in Web Config

Restrictions on Copying

Observe the following restrictions to ensure responsible and legal use of your scanner.

Copying of the following items is prohibited by law:

- Bank bills, coins, government-issued marketable securities, government bond securities, and municipal securities
- Unused postage stamps, pre-stamped postcards, and other official postal items bearing valid postage
- Government-issued revenue stamps, and securities issued according to legal procedure

Exercise caution when copying the following items:

- Private marketable securities (stock certificates, negotiable notes, checks, etc.), monthly passes, concession tickets, etc.
- Passports, driver's licenses, warrants of fitness, road passes, food stamps, tickets, etc.

Note: Copying these items may also be prohibited by law.

Restriction on disassembling and decompiling

You may not disassemble, decompile, or otherwise attempt to derive the source code of any software included with this product.

Parent topic: Notices

Default Delay Times for Power Management for Epson Products

This product will enter sleep mode after a period of nonuse. This is to ensure that the product meets Energy Star standards of energy efficiency. More energy savings can be achieved by setting the time to sleep to a shorter interval.

Parent topic: Notices

Binding Arbitration and Class Waiver

1. DISPUTES, BINDING INDIVIDUAL ARBITRATION, AND WAIVER OF CLASS ACTIONS AND CLASS ARBITRATIONS

1.1 **Disputes**. The terms of this Section 1 shall apply to all Disputes between you and Epson. The term "Dispute" is meant to have the broadest meaning permissible under law and includes any dispute, claim, controversy or action between you and Epson arising out of or relating to this Agreement, Epson branded products (hardware and including any related software), or other transaction involving you and Epson, whether in contract, warranty, misrepresentation, fraud, tort, intentional tort, statute, regulation, ordinance, or any other legal or equitable basis. "DISPUTE" DOES NOT INCLUDE IP CLAIMS, or more specifically, a claim or cause of action for (a) trademark infringement or dilution, (b) patent infringement, (c) copyright infringement or misuse, or (d) trade secret misappropriation (an "IP Claim"). You and Epson also agree, notwithstanding Section 1.6, that a court, not an arbitrator, may decide if a claim or cause of action is for an IP Claim.

1.2 **Binding Arbitration**. You and Epson agree that all Disputes shall be resolved by binding arbitration according to this Agreement. **ARBITRATION MEANS THAT YOU WAIVE YOUR RIGHT TO A JUDGE OR JURY IN A COURT PROCEEDING AND YOUR GROUNDS FOR APPEAL ARE LIMITED**. Pursuant to this Agreement, binding arbitration shall be administered by JAMS, a nationally recognized arbitration authority, pursuant to its code of procedures then in effect for consumer related disputes, but excluding any rules that permit joinder or class actions in arbitration (for more detail on procedure, see Section 1.6 below). You and Epson understand and agree that (a) the Federal Arbitration Act (9 U.S.C. §1, et seq.) governs the interpretation and enforcement of this Section 1, (b) this Agreement memorializes a transaction in interstate commerce, and (c) this Section 1 shall survive termination of this Agreement.

1.3 **Pre-Arbitration Steps and Notice**. Before submitting a claim for arbitration, you and Epson agree to try, for sixty (60) days, to resolve any Dispute informally. If Epson and you do not reach an agreement to

resolve the Dispute within the sixty (60) days), you or Epson may commence an arbitration. Notice to Epson must be addressed to: Epson America, Inc., ATTN: Legal Department, 3131 Katella Ave., Los Alamitos, CA 90720 (the "Epson Address"). The Dispute Notice to you will be sent to the most recent address Epson has in its records for you. For this reason, it is important to notify us if your address changes by emailing us at EAILegal@ea.epson.com or writing us at the Epson Address above. Notice of the Dispute shall include the sender's name, address and contact information, the facts giving rise to the Dispute, and the relief requested (the "Dispute Notice"). Following receipt of the Dispute Notice, Epson and you agree to act in good faith to resolve the Dispute before commencing arbitration.

1.4 **Small Claims Court**. Notwithstanding the foregoing, you may bring an individual action in the small claims court of your state or municipality if the action is within that court's jurisdiction and is pending only in that court.

1.5 **WAIVER OF CLASS ACTIONS AND CLASS ARBITRATIONS. YOU AND EPSON AGREE THAT EACH PARTY MAY BRING DISPUTES AGAINST THE OTHER PARTY ONLY IN AN INDIVIDUAL CAPACITY, AND NOT AS A PLAINTIFF OR CLASS MEMBER IN ANY CLASS OR REPRESENTATIVE PROCEEDING, INCLUDING WITHOUT LIMITATION FEDERAL OR STATE CLASS ACTIONS, OR CLASS ARBITRATIONS. CLASS ACTION LAWSUITS, CLASS-WIDE ARBITRATIONS, PRIVATE ATTORNEY-GENERAL ACTIONS, AND ANY OTHER PROCEEDING WHERE SOMEONE ACTS IN A REPRESENTATIVE CAPACITY ARE NOT ALLOWED. ACCORDINGLY, UNDER THE ARBITRATION PROCEDURES OUTLINED IN THIS SECTION, AN ARBITRATOR SHALL NOT COMBINE OR CONSOLIDATE MORE THAN ONE PARTY'S CLAIMS WITHOUT THE WRITTEN CONSENT OF ALL AFFECTED PARTIES TO AN ARBITRATION PROCEEDING.**

1.6 **Arbitration Procedure**. If you or Epson commences arbitration, the arbitration shall be governed by the rules of JAMS that are in effect when the arbitration is filed, excluding any rules that permit arbitration on a class or representative basis (the "JAMS Rules"), available at http://www.jamsadr.com or by calling 1-800-352-5267, and under the rules set forth in this Agreement. All Disputes shall be resolved by a single neutral arbitrator, and both parties shall have a reasonable opportunity to participate in the selection of the arbitrator. The arbitrator is bound by the terms of this Agreement. The arbitrator, and not any federal, state or local court or agency, shall have exclusive authority to resolve all disputes arising out of or relating to the interpretation, applicability, enforceability or formation of this Agreement, including any claim that all or any part of this Agreement is void or voidable. Notwithstanding this broad delegation of authority to the arbitrator, a court may determine the limited question of whether a claim or cause of action is for an IP Claim, which is excluded from the definition of "Disputes" in Section 1.1 above. The arbitrator shall be empowered to grant whatever relief would be available in a court under law or in equity. The arbitrator may award you the same damages as a court could, and may award declaratory or injunctive relief only in favor of the individual party seeking relief and only to the extent necessary to provide relief warranted by that party's individual claim. In some instances, the costs of arbitration can exceed the costs of litigation and the right to discovery may be more limited in arbitration

than in court. The arbitrator's award is binding and may be entered as a judgment in any court of competent jurisdiction.

You may choose to engage in arbitration hearings by telephone. Arbitration hearings not conducted by telephone shall take place in a location reasonably accessible from your primary residence, or in Orange County, California, at your option.

a) Initiation of Arbitration Proceeding. If either you or Epson decides to arbitrate a Dispute, both parties agree to the following procedure:

(i) Write a Demand for Arbitration. The demand must include a description of the Dispute and the amount of damages sought to be recovered. You can find a copy of a Demand for Arbitration at http://www.jamsadr.com ("Demand for Arbitration").

(ii) Send three copies of the Demand for Arbitration, plus the appropriate filing fee, to: JAMS, 500 North State College Blvd., Suite 600 Orange, CA 92868, U.S.A.

(iii) Send one copy of the Demand for Arbitration to the other party (same address as the Dispute Notice), or as otherwise agreed by the parties.

b) Hearing Format. During the arbitration, the amount of any settlement offer made shall not be disclosed to the arbitrator until after the arbitrator determines the amount, if any, to which you or Epson is entitled. The discovery or exchange of non-privileged information relevant to the Dispute may be allowed during the arbitration.

c) Arbitration Fees. Epson shall pay, or (if applicable) reimburse you for, all JAMS filings and arbitrator fees for any arbitration commenced (by you or Epson) pursuant to provisions of this Agreement.

d) Award in Your Favor. For Disputes in which you or Epson seeks $75,000 or less in damages exclusive of attorney's fees and costs, if the arbitrator's decision results in an award to you in an amount greater than Epson's last written offer, if any, to settle the Dispute, Epson will: (i) pay you $1,000 or the amount of the award, whichever is greater; (ii) pay you twice the amount of your reasonable attorney's fees, if any; and (iii) reimburse you for any expenses (including expert witness fees and costs) that your attorney reasonably accrues for investigating, preparing, and pursuing the Dispute in arbitration. Except as agreed upon by you and Epson in writing, the arbitrator shall determine the amount of fees, costs, and expenses to be paid by Epson pursuant to this Section 1.6d).

e) Attorney's Fees. Epson will not seek its attorney's fees and expenses for any arbitration commenced involving a Dispute under this Agreement. Your right to attorney's fees and expenses under Section 1.6d) above does not limit your rights to attorney's fees and expenses under applicable law; notwithstanding the foregoing, the arbitrator may not award duplicative awards of attorney's fees and expenses.

1.7 **Opt-out. You may elect to opt-out (exclude yourself) from the final, binding, individual arbitration procedure and waiver of class and representative proceedings specified in this Agreement by sending a written letter to the Epson Address within thirty (30) days of your assent**

to this Agreement (including without limitation the purchase, download, installation of the Software or other applicable use of Epson Hardware, products and services) that specifies (i) your name, (ii) your mailing address, and (iii) your request to be excluded from the final, binding individual arbitration procedure and waiver of class and representative proceedings specified in this Section 1. In the event that you opt-out consistent with the procedure set forth above, all other terms shall continue to apply, including the requirement to provide notice prior to litigation.

1.8 **Amendments to Section 1**. Notwithstanding any provision in this Agreement to the contrary, you and Epson agree that if Epson makes any future amendments to the dispute resolution procedure and class action waiver provisions (other than a change to Epson's address) in this Agreement, Epson will obtain your affirmative assent to the applicable amendment. If you do not affirmatively assent to the applicable amendment, you are agreeing that you will arbitrate any Dispute between the parties in accordance with the language of this Section 1 (or resolve disputes as provided for in Section 1.7, if you timely elected to opt-out when you first assented to this Agreement).

1.9 **Severability**. If any provision in this Section 1 is found to be unenforceable, that provision shall be severed with the remainder of this Agreement remaining in full force and effect. **The foregoing shall not apply to the prohibition against class or representative actions as provided in Section 1.5. This means that if Section 1.5 is found to be unenforceable, the entire Section 1 (but only Section 1) shall be null and void.**

Parent topic: Notices

Trademarks

EPSON® and Epson Smart Panel® are registered trademarks and Epson Connect™ is a trademark of Seiko Epson Corporation.

Apple, App Store, Mac, macOS, OS X, and AirPrint are trademarks of Apple Inc., registered in the U.S. and other countries.

Use of the Works with Apple badge means that an accessory has been designed to work specifically with the technology identified in the badge and has been certified by the developer to meet Apple performance standards.

The Mopria™ wordmark and the Mopria™ Logo are registered and/or unregistered trademarks of Mopria Alliance, Inc. in the United States and other countries. Unauthorized use is strictly prohibited.

Google® is a registered trademark and Android™, Gmail™, and Google Play™ are trademarks of Google LLC.

Microsoft, Excel, PowerPoint, Windows, and Windows Server are trademarks of the Microsoft group of companies.

Wi-Fi Direct® is a registered trademark of Wi-Fi Alliance®.

General Notice: Other product names used herein are for identification purposes only and may be trademarks of their respective owners. Epson disclaims any and all rights in those marks.

EPSON®

Parent topic: Notices

Copyright Notice

All rights reserved. No part of this publication may be reproduced, stored in a retrieval system, or transmitted in any form or by any means, electronic, mechanical, photocopying, recording, or otherwise, without the prior written permission of Seiko Epson Corporation. The information contained herein is designed only for use with this Epson product. Epson is not responsible for any use of this information as applied to other products.

Neither Seiko Epson Corporation nor its affiliates shall be liable to the purchaser or lessee of this product or third parties for damages, losses, costs, or expenses incurred by purchaser or lessee or third parties as a result of: accident, misuse, or abuse of this product or unauthorized modifications, repairs, or alterations to this product, or (excluding the U.S.) failure to strictly comply with Seiko Epson Corporation's operating and maintenance instructions.

Seiko Epson Corporation shall not be liable for any damages or problems arising from the use of any options or any consumable products other than those designated as Original Epson Products or Epson Approved Products by Seiko Epson Corporation.

Seiko Epson Corporation shall not be held liable for any damage resulting from electromagnetic interference that occurs from the use of any interface cables other than those designated as Epson approved Products by Seiko Epson Corporation.

This information is subject to change without notice.

libTIFF Software Acknowledgment

A Note Concerning Responsible Use of Copyrighted Materials

Copyright Attribution

Parent topic: Notices

libTIFF Software Acknowledgment

Copyright © 1988-1997 Sam Leffler

Copyright © 1991-1997 Silicon Graphics, Inc.

Permission to use, copy, modify, distribute, and sell this software and its documentation for any purpose is hereby granted without fee, provided that (I) the above copyright notices and this permission notice

appear in all copies of the software and related documentation, and (ii) the names of Sam Leffler and Silicon Graphics may not be used in any advertising or publicity relating to the software without the specific, prior written permission of Sam Leffler and Silicon Graphics.

THE SOFTWARE IS PROVIDED "AS-IS" AND WITHOUT WARRANTY OF ANY KIND, EXPRESS, IMPLIED OR OTHERWISE, INCLUDING WITHOUT LIMITATION, ANY WARRANTY OF MERCHANTABILITY OR FITNESS FOR A PARTICULAR PURPOSE.

IN NO EVENT SHALL SAM LEFFLER OR SILICON GRAPHICS BE LIABLE FOR ANY SPECIAL, INCIDENTAL, INDIRECT OR CONSEQUENTIAL DAMAGES OF ANY KIND, OR ANY DAMAGES WHATSOEVER RESULTING FROM LOSS OF USE, DATA OR PROFITS, WHETHER OR NOT ADVISED OF THE POSSIBILITY OF DAMAGE, AND ON ANY THEORY OF LIABILITY, ARISING OUT OF OR IN CONNECTION WITH THE USE OR PERFORMANCE OF THIS SOFTWARE.

Parent topic: Copyright Notice

A Note Concerning Responsible Use of Copyrighted Materials

Epson encourages each user to be responsible and respectful of the copyright laws when using any Epson product. While some countries' laws permit limited copying or reuse of copyrighted material in certain circumstances, those circumstances may not be as broad as some people assume. Contact your legal advisor for any questions regarding copyright law.

Parent topic: Copyright Notice

Copyright Attribution

© 2026 Epson America, Inc.

1/26

CPD-63364R2

Parent topic: Copyright Notice