Premium Locking Floor Stand Kiosk w/ Digital Password Combination Security Enclosure

PAD-PARAFDC

INSTRUCTION - MANUAL

CONTENTS:

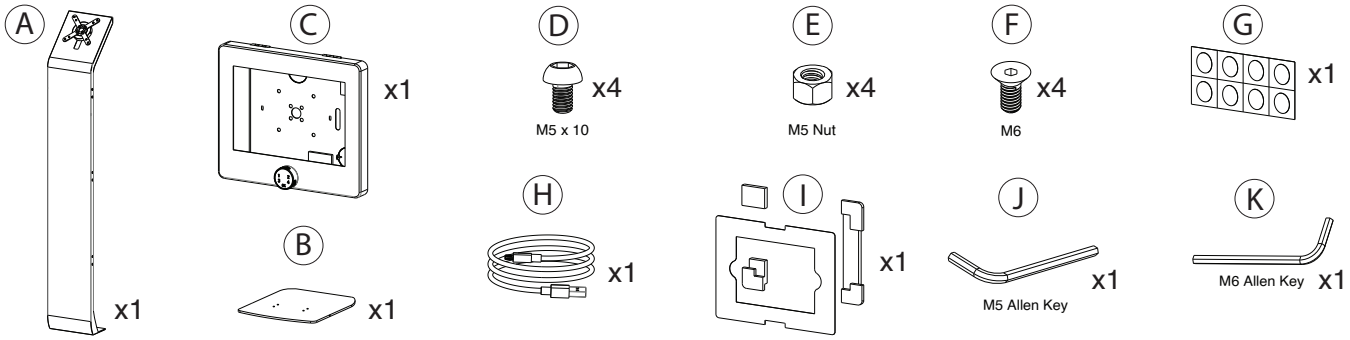

INSTALLATION:

1. Assembling floorstand base :

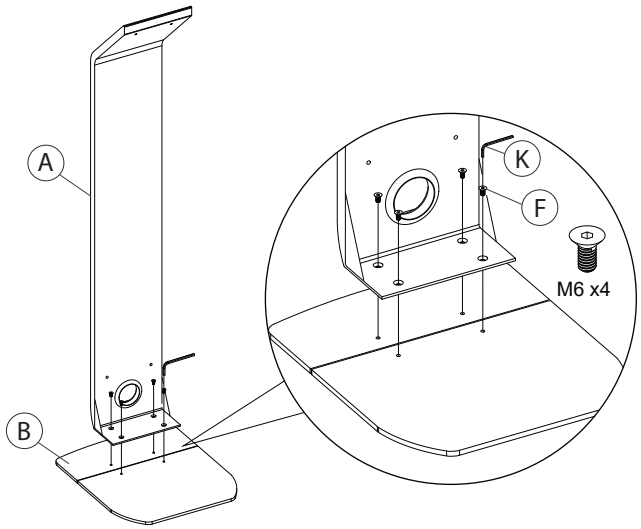

1A. Allign the holes on the sntad (A) with holes on the base (B) and turn in screws (F) with provided allen tool (K) until securely tightened. Shown above.

2. Cable routing :

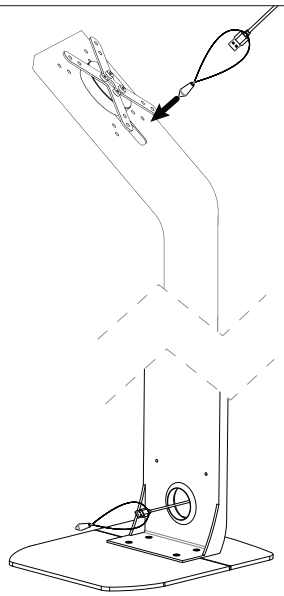

2A. To route a charge cable through the stand, attach the weighted pendant to your charge cable, then pass through the cutout at the top of the stand.

2B. When the cable reaches the bottom of the stand, pull through the hole at the stand back and remove the weighted pendant as shown.

3. Attaching enclosure to VESA plate :

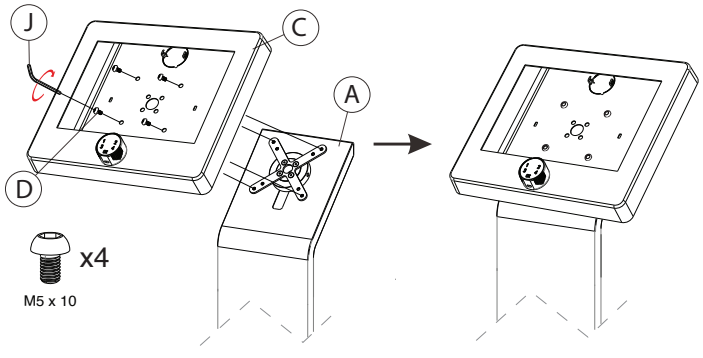

3A. Align enclosure (C) VESA holes to VESA plate holes in stand (A) and from the front of enclosure turn in screws (D) into the threaded VESA holes with provided allen tool (J) until securely thigtened. Shown above.

4. Setting up the foam adapters :

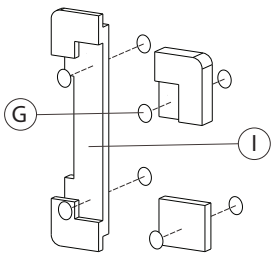

4A. Identify the double sided adhesives (G). Peel away the backing on both sides. Adhesive four of them behind the foam pieces (I) as illustrated. They are to adhese the foam to the enclosure. Peel away the back on the next four and place them on top of the foam pieces as illustrated. These are to attach the foam to the tablets and ensure security.

36 Taaffe Place Brooklyn, NY 11205 support@ctadigital.com 888-733-4448 www.ctadigital.com

4. Inserting Tablet into Enclosure :

***Tablet shown for illustration only, NOT INCLUDED.*

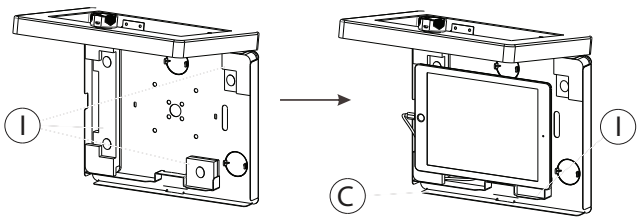

4A. With the enclosure open, insert tablet into the foam adapters (I). Make sure the adhesives have been placed ahead of time or tablet will fall out. Plug your tablet into any cables/wires you have routed to the enclosure. After tablet is secure, close the top and lock into place.

5. Removing Enclosure Back Opening Covers :

***Tablet shown for illustration only, NOT INCLUDED.*

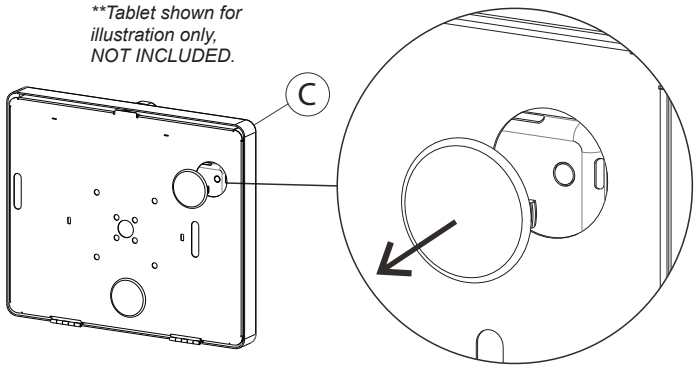

5A. When installing device into the enclosure, identify where the camera is. Then simply remove and pop out the cover prior to mounting or setting up tablet to properly expose camera.

6. Locking Enclosure :

***Tablet shown for illustration only, NOT INCLUDED.*

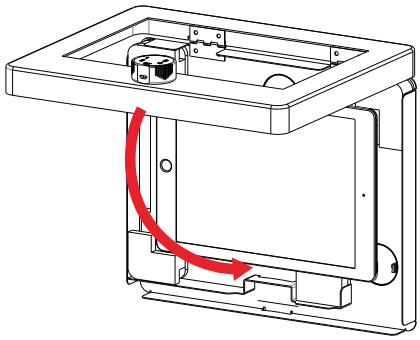

6A. Once tablet is inserted, close the front cover securely.

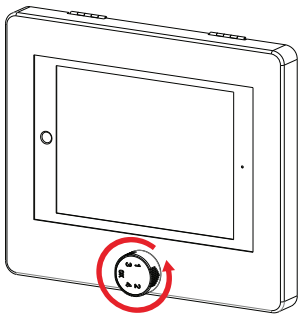

6B. After, turn the digital lock 90 degrees clockwise. This will lock the tablet in place.

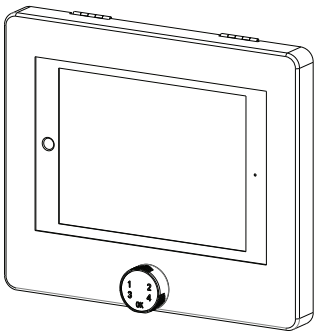

***See following page for digital lock usage and setup*

7. Charge the lock :

***Tablet shown for illustration only, NOT INCLUDED.*

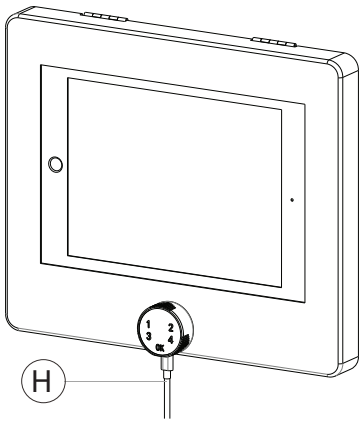

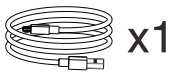

7A. Identify the lock chart port on the bottom side as illustrated. Plug in provided charging cable (H) from one end to another to properly charge digital lock.

8. Portrait & Landscape modes :



8A. Enclosure can be mounted in vertical and horizontal positions as needed. Shown above.

36 Taaffe Place Brooklyn, NY 11205 support@ctadigital.com 888-733-4448 www.ctadigital.com



How to unlock

1. Press default password “123”, press “OK”.
2. Green light on about 5 seconds and you hear a long beep means verification passed and it is unlocked. Please turn the lock to unlock within 5 seconds.

   Remark: If you entered wrong password 3 times the system will be locked for 1 minute.

Press 1: Change Administrator Password

The password should be 3-9 digits, each digits can be any number during 1-4.

1. Press “1”, Press “OK”, when the blue light on and there is a beep, means into setting mode.
2. Verification:
   Enter default password “123”, press “OK” to confirm.
   Blue light flashes and beeps 3 times means verification passed.
3. When the blue light flashes
   Enter new password and press “OK” to confirm.
   Enter new password again and press “OK” to confirm.
   When the green light on and a long beep heard means new password setting is done.
4. Use new password to unlock to test.

   Remark: Please do remember your new Administrator Password. If forgot we don't have other way to get it back and without it factory setting can't be done too.

Press 2: Create User Password

The password should be 3-9 digits, each digit can be any number during 1-4.
You can add up to 20 user passwords.

1. Press “2”, Press “OK”, when the blue light on and there is a beep, means into setting mode.
2. Verification:
   Enter administrator password, press “OK” to confirm.
   Blue light flashes and beeps 3 times means verification passed.
3. When the blue light flashes
   Enter new password and press “OK” to confirm.
   Enter new password again and press “OK” to confirm.
   When the green light on and a long beep heard means new password setting is done.
4. Use new password to unlock to test.

Restore Factory Setting

1. Press “OK” for about 15 seconds until the red light on (please ignore the blue light).
2. Verification:
   Enter Administrator Password and press “OK” to confirm.
   When the light flashes and a long beep heard means verification passed.

   When complete, all the user's passwords and temporary passwords are invalid and administrator password back to “123” again.

Power Instruction

1. Low power warning: Red light flashes and beeps 5 times. Please charge the lock.
2. You can unlock when charging by USB cable.

36 Taaffe Place Brooklyn, NY 11205 support@ctadigital.com 778-991-0169 www.ctadigital.com