

Hardware Installation Guide for Cisco 4000 Series Integrated Services Routers

Last Updated July 27, 2018

Cisco Systems, Inc.
www.cisco.com

Cisco has more than 200 offices worldwide. Addresses, phone numbers, and fax numbers are listed on the Cisco website at www.cisco.com/go/offices.

Text Part Number: OL-32185-02

THE SPECIFICATIONS AND INFORMATION REGARDING THE PRODUCTS IN THIS MANUAL ARE SUBJECT TO CHANGE WITHOUT NOTICE. ALL STATEMENTS, INFORMATION, AND RECOMMENDATIONS IN THIS MANUAL ARE BELIEVED TO BE ACCURATE BUT ARE PRESENTED WITHOUT WARRANTY OF ANY KIND, EXPRESS OR IMPLIED. USERS MUST TAKE FULL RESPONSIBILITY FOR THEIR APPLICATION OF ANY PRODUCTS.

THE SOFTWARE LICENSE AND LIMITED WARRANTY FOR THE ACCOMPANYING PRODUCT ARE SET FORTH IN THE INFORMATION PACKET THAT SHIPPED WITH THE PRODUCT AND ARE INCORPORATED HEREIN BY THIS REFERENCE. IF YOU ARE UNABLE TO LOCATE THE SOFTWARE LICENSE OR LIMITED WARRANTY, CONTACT YOUR CISCO REPRESENTATIVE FOR A COPY.

The following information is for FCC compliance of Class A devices: This equipment has been tested and found to comply with the limits for a Class A digital device, pursuant to part 15 of the FCC rules. These limits are designed to provide reasonable protection against harmful interference when the equipment is operated in a commercial environment. This equipment generates, uses, and can radiate radio-frequency energy and, if not installed and used in accordance with the instruction manual, may cause harmful interference to radio communications. Operation of this equipment in a residential area is likely to cause harmful interference, in which case users will be required to correct the interference at their own expense.

The following information is for FCC compliance of Class B devices: This equipment has been tested and found to comply with the limits for a Class B digital device, pursuant to part 15 of the FCC rules. These limits are designed to provide reasonable protection against harmful interference in a residential installation. This equipment generates, uses and can radiate radio frequency energy and, if not installed and used in accordance with the instructions, may cause harmful interference to radio communications. However, there is no guarantee that interference will not occur in a particular installation. If the equipment causes interference to radio or television reception, which can be determined by turning the equipment off and on, users are encouraged to try to correct the interference by using one or more of the following measures:

- Reorient or relocate the receiving antenna.
- Increase the separation between the equipment and receiver.
- Connect the equipment into an outlet on a circuit different from that to which the receiver is connected.
- Consult the dealer or an experienced radio/TV technician for help.

Modifications to this product not authorized by Cisco could void the FCC approval and negate your authority to operate the product.

The Cisco implementation of TCP header compression is an adaptation of a program developed by the University of California, Berkeley (UCB) as part of UCB's public domain version of the UNIX operating system. All rights reserved. Copyright © 1981, Regents of the University of California.

NOTWITHSTANDING ANY OTHER WARRANTY HEREIN, ALL DOCUMENT FILES AND SOFTWARE OF THESE SUPPLIERS ARE PROVIDED "AS IS" WITH ALL FAULTS. CISCO AND THE ABOVE-NAMED SUPPLIERS DISCLAIM ALL WARRANTIES, EXPRESSED OR IMPLIED, INCLUDING, WITHOUT LIMITATION, THOSE OF MERCHANTABILITY, FITNESS FOR A PARTICULAR PURPOSE AND NONINFRINGEMENT OR ARISING FROM A COURSE OF DEALING, USAGE, OR TRADE PRACTICE.

IN NO EVENT SHALL CISCO OR ITS SUPPLIERS BE LIABLE FOR ANY INDIRECT, SPECIAL, CONSEQUENTIAL, OR INCIDENTAL DAMAGES, INCLUDING, WITHOUT LIMITATION, LOST PROFITS OR LOSS OR DAMAGE TO DATA ARISING OUT OF THE USE OR INABILITY TO USE THIS MANUAL, EVEN IF CISCO OR ITS SUPPLIERS HAVE BEEN ADVISED OF THE POSSIBILITY OF SUCH DAMAGES.

Cisco and the Cisco logo are trademarks or registered trademarks of Cisco and/or its affiliates in the U.S. and other countries. To view a list of Cisco trademarks, go to this URL: www.cisco.com/go/trademarks. Third-party trademarks mentioned are the property of their respective owners. The use of the word partner does not imply a partnership relationship between Cisco and any other company. (1110R)

Any Internet Protocol (IP) addresses and phone numbers used in this document are not intended to be actual addresses and phone numbers. Any examples, command display output, network topology diagrams, and other figures included in the document are shown for illustrative purposes only. Any use of actual IP addresses or phone numbers in illustrative content is unintentional and coincidental.

© 2018 Cisco Systems, Inc. All rights reserved.



CONTENTS

CHAPTER 1 **Overview of Cisco 4000 Series ISRs** 1-1

- Chassis Views 1-2
  - Cisco 4461 ISR Chassis 1-3
    - Platform Summary 1-8
  - Cisco 4451-X ISR Chassis 1-9
    - Platform Summary 1-12
  - Cisco 4431 ISR Chassis 1-12
    - Platform Summary 1-15
  - Cisco 4351 ISR Chassis 1-16
    - Platform Summary 1-18
  - Cisco 4331 ISR Chassis 1-19
    - Platform Summary 1-20
  - Cisco 4321 ISR Chassis 1-21
    - Platform Summary 1-22
  - Cisco 4221 ISR Chassis 1-23
    - Platform Summary 1-25
- Locate Product Identification Details 1-26
  - Labels on Cisco 4000 Series ISRs 1-26
  - Additional Help for Locating Cisco 4000 Series ISRs Labels 1-27
- Hardware Features of Cisco 4000 Series ISRs 1-27
  - Built-In Interface Ports 1-27
    - Dual Mode GE or SFP Ports 1-28
    - USB Serial Console Port 1-28
    - Front Panel PoE+ Ports 1-28
    - Internal PoE Daughter Card 1-28
  - LED Indicators 1-29
    - Removable and Interchangeable Modules and Cards 1-35
    - Network Interface Modules and Service Modules 1-35
    - Cisco UCS E-Series Server Modules 1-36
    - System Flash 1-36
    - Solid State Drives 1-36
    - Packet Voice Digital Signal Processor Modules 1-36
    - Memory 1-37

Power Supply 1-37
Fans, Ventilation, and Airflow 1-38
Slots, Subslots (Bay), Ports, and Interfaces in Cisco 4000 Series ISRs 1-40
Slot Numbering 1-42
About Slot 0 1-42
Subslot/Bay Numbering 1-42
Gigabit Ethernet Management 1-42
Specifications 1-43
Periodic Inspection and Cleaning 1-45

CHAPTER 2 **Cisco 4000 Series ISRs Preinstallation 2-1**
Standard Warning Statements 2-1
General Safety Warnings 2-2
Safety Recommendations 2-5
Safety with Electricity 2-6
Prevent Electrostatic Discharge Damage 2-7
General Site Requirements 2-7
General Precautions 2-7
Site Selection Guidelines 2-8
Site Environmental Requirements 2-8
Physical Characteristics 2-9
Rack Requirements 2-9
Router Environmental Requirements 2-9
Power Guidelines and Requirements 2-10
Network Cabling Specifications 2-10
Console and Auxiliary Port Considerations 2-11
Console Port Connections 2-11
Auxiliary Port Connections 2-12
Prepare for Network Connections 2-13
Ethernet Connections 2-13
Required Tools and Equipment for Installation and Maintenance 2-13
Installation Checklist 2-15
Creating a Site Log 2-16

CHAPTER 3 **Install and Connect Cisco 4000 Series ISRs 3-1**
Before You Begin 3-3
Unpack the Router 3-4
Install the Router 3-4

Set Chassis on Desktop 3-4
Attach Chassis to Wall or Mount Chassis in Rack 3-5
Install Cisco 4400 or 4300 ISR 3-5
Install Cisco 4200 Series ISR 3-12
Chassis Grounding 3-19
Connect Power 3-20
Connect to AC Power 3-21
Connect to Console Terminal or Modem 3-22
Connect to Serial Port with Microsoft Windows 3-22
Connect to Console Port with Mac OS X 3-23
Connect to Console Port with Linux 3-24
Install Cisco Microsoft Windows USB Device Driver 3-24
Install Cisco Microsoft Windows XP USB Driver 3-25
Install Cisco Microsoft Windows 2000 USB Driver 3-25
Install Cisco Microsoft Windows Vista USB Driver 3-25
Uninstall Cisco Microsoft Windows USB Driver 3-26
Uninstall Cisco Microsoft Windows XP and 2000 USB Driver 3-26
Uninstall Cisco Microsoft Windows Vista USB Driver 3-27
Connect WAN, LAN, and Voice Interfaces 3-27
Ports and Cabling 3-28
Connection Procedures and Precautions 3-29
Configure Initial Router Settings on Cisco 4000 Series ISRs 3-29
ROM Monitor Overview and Basic Procedures 3-29

CHAPTER 4 **Configure Initial Router Settings on Cisco 4000 Series ISRs 4-1**
Perform Initial Configuration on Cisco 4000 Series ISRs 4-1
Use Cisco Setup Command Facility 4-1
Complete the Configuration 4-4
Use Cisco IOS XE CLI—Manual Configuration 4-5
Configure Cisco 4000 Series ISR Hostname 4-6
Configure the Enable and Enable Secret Passwords 4-7
Configure the Console Idle Privileged EXEC Timeout 4-8
Gigabit Ethernet Management Interface Overview 4-10
Default Gigabit Ethernet Configuration 4-10
Gigabit Ethernet Port Numbering 4-10
Configure Gigabit Ethernet Interfaces 4-11
Configuration Examples 4-12
Specify a Default Route or Gateway of Last Resort 4-13
Configure IP Routing and IP Protocols 4-13

Default Routes 4-13
Default Network 4-13
Gateway of Last Resort 4-14
Configuration Examples 4-15
Configure Virtual Terminal Lines for Remote Console Access 4-16
Configuration Examples 4-17
Configure the Auxiliary Line 4-18
Verify Network Connectivity 4-19
Save Your Device Configuration 4-20
Save Backup Copies of Configuration and System Image 4-20
Configuration Examples 4-21
Verify Initial Configuration on Cisco 4000 Series ISRs 4-23

CHAPTER 5 **Install and Upgrade Internal Modules and FRUs** 5-1
Safety Warnings 5-2
Modules Supported 5-4
Access Internal Modules 5-4
Remove and Replace Chassis Cover 5-4
Remove Cover from Cisco 4400 or 4200 ISR 5-4
Remove Cover from Cisco 4300 ISR 5-5
Replace Cover on Cisco 4400 or 4200 ISR 5-5
Replace Cover on Cisco 4300 ISR 5-6
Locate Internal and External Slots 5-6
Locate Internal and External Slots for Modules on Cisco 4461 ISR 5-7
Locate NEBS Module 5-8
Locate Internal and External Slots for Modules on Cisco 4451 ISR 5-8
Locate Internal and External Slots for Modules on Cisco 4351 ISR 5-10
Locate Internal and External Slots for Modules on Cisco 4331 ISR 5-11
5-11
Overview of the SSD Carrier Card NIM (NIM-SSD) 5-11
Overview 5-12
LEDs on NIM-SSD 5-13
Solid State Drives 5-15
Install SSD Drives into the NIM Carrier Card 5-17
Remove SSD Drives from the NIM-SSD 5-18
Overview of NIM-HDD Card 5-20
Cisco NIM-HDD LEDs 5-22
Remove and Replace Cisco NIM-SSD or NIM-HDD 5-22
Remove NIM-SSD or NIM-HDD 5-24

Replace NIM-SSD or NIM-HDD 5-25
Install and Remove DDR DIMMs on Cisco 4400 or 4300 Series ISRs 5-25
Locate and Orient DIMM 5-25
Remove DIMM 5-26
Install DIMM 5-28
Install and Remove NIMs and SM-Xs on Cisco 4000 Series ISRs 5-30
Software Requirement for SM-Xs 5-31
Locate SM-X or NIM 5-31
Remove SM-X or NIM 5-31
Install SM-X 5-31
Verify SM-X Installation 5-32
Install and Remove PVDM4 on Cisco 4400 or 4300 Series ISRs 5-32
Tools and Equipment Requirements 5-33
PVDM4 Location and Orientation 5-33
Install PVDM4 on the Motherboard of Cisco 4400 Series ISRs 5-34
Remove the PVDM4 from the Motherboard of Cisco 4400 ISRs 5-35
Install the PVDM4 on the Motherboard of Cisco 4331 ISR 5-36
Remove the PVDM4 from the Motherboard of Cisco 4331 ISR 5-37
Install the PVDM4 on Cisco Fourth-Generation T1/E1 Voice and WAN NIM 5-38
Remove the PVDM4 from Cisco Fourth-Generation T1/E1 Voice and WAN NIM 5-39
Remove and Replace the USB Flash Token Memory Stick 5-39
Remove and Replace Cisco 4000 Series ISRs Power Supplies 5-40
AC Power Supplies 5-41
Overview of the AC Power Supply 5-41
Replace AC Power Supply 5-42
Overview of DC Power Supply 5-45
Remove DC Input Power from Cisco 4461 or 4431 ISR 5-47
Install DC Input Power on Cisco 4431 ISR 5-48
Replace the Power Supply Module the Cisco 4331 Router 5-51
Remove DC Input Power from Cisco 4331 ISR 5-52
Install DC Input Power on Cisco 4331 ISR 5-53
PoE Converter Power Supply Unit 5-56
Overview of the PoE Converter Power Supply Unit 5-56
Remove PoE Power Supply Slot Filler 5-57
Install the PoE Converter Power Supply 5-57
Remove PoE Converter Power Supply 5-58
Install the PoE Power Supply Slot Filler 5-58
Replace a Fan Tray 5-60
Before Hot-Swapping a Fan Tray 5-60

Replace Fan Tray 5-60
Replace Fan Tray on Cisco 4331 ISR 5-62
Remove and Install a CompactFlash Memory Card 5-65
Prevent Electrostatic Discharge Damage 5-65
Remove the CompactFlash Memory Card 5-66
Install the CompactFlash Memory Card 5-67
Remove and Install the Flash Memory Card 5-67
Prevent Electrostatic Discharge Damage 5-68
Install the Flash Memory Card 5-68
Remove the Flash Memory Card 5-70
Install and Remove an SSD mSATA Storage Device 5-70
Prevent Electrostatic Discharge Damage 5-70
Install the SSD mSATA Storage Device 5-71
Remove the SSD mSATA Storage Device 5-72
Install and Remove SFP Modules 5-73
Install SFPs 5-75
Laser Safety Guidelines 5-75
Remove SFP Modules: 5-76
Remove, Replace, and Install the Internal PoE Daughter Card 5-77

APPENDIX A **Online Insertion and Removal and Hot-Swapping** A-1
OIR Procedures A-2
Remove a Module A-2
Insert a Module A-2
Hot-Swapping Procedures A-2



Overview of Cisco 4000 Series ISRs

Cisco 4000 Series Integrated Services Routers (ISRs) are modular routers with LAN and WAN connectivity. They support several interface modules, including Cisco Enhanced Service Modules (SM-X) and Cisco Network Interface Modules (NIMs).

Cisco 4000 Series ISRs target these applications:

- Enterprise applications—Intended for mid-size aggregation and gateway router that is located in a regional or large branch office:
  - WAN aggregation at Cisco Enterprise core
  - Internet gateway
  - Branch or regional office aggregation
  - Remote access aggregation
- Service provider applications—Intended for high-end Enterprise Branch environments:
  - High-end customer premises equipment (CPE) for business-quality Internet access
  - Service provider leased line aggregation
  - Provider edge (PE) and high-end customer edge (CE) for Layer 2 VPN or Layer 3 VPN services
  - Low-end Ethernet aggregation

Cisco 4000 Series ISRs are available in these models:

- Cisco 4461 ISR
- Cisco 4451-X ISR
- Cisco 4431 ISR
- Cisco 4351 ISR
- Cisco 4331 ISR
- Cisco 4321 ISR
- Cisco 4221 ISR

For more information on the features and specifications of Cisco 4000 Series Integrated Services Routers (ISRs), refer to the Cisco 4000 Series Integrated Services Routers datasheet.

Note Sections in this documentation apply to all models of Cisco 4000 Series ISRs unless a reference to a specific model is made explicitly.

This chapter contains the following sections:

- Chassis Views, page 1-2
- Chassis Views, page 1-2
- Locate Product Identification Details, page 1-29
- Hardware Features of Cisco 4000 Series ISRs, page 1-30
- Slots, Subslots (Bay), Ports, and Interfaces in Cisco 4000 Series ISRs, page 1-44
- Specifications, page 1-47
- Periodic Inspection and Cleaning, page 1-50

Chassis Views

This section contains views of the front and back panels of the Cisco 4000 Series ISRs, showing the locations of power and signal interfaces, module slots, status indicators, and chassis identification labels:

- Cisco 4461 ISR Chassis
- Cisco 4451-X ISR Chassis
- Cisco 4431 ISR Chassis
- Cisco 4351 ISR Chassis
- Cisco 4331 ISR Chassis
- Cisco 4321 ISR Chassis
- Cisco 4221 ISR Chassis

Cisco 4461 ISR Chassis

Cisco 4461 ISR routers support these slot types:
- Network Interface Modules (NIMs)
- Service modules (SM-X, like SM-X-1T3/E3)
- E-Series Server Modules

Figure 1-1 Bezel Side of Cisco 4461 ISR with Two PSUs

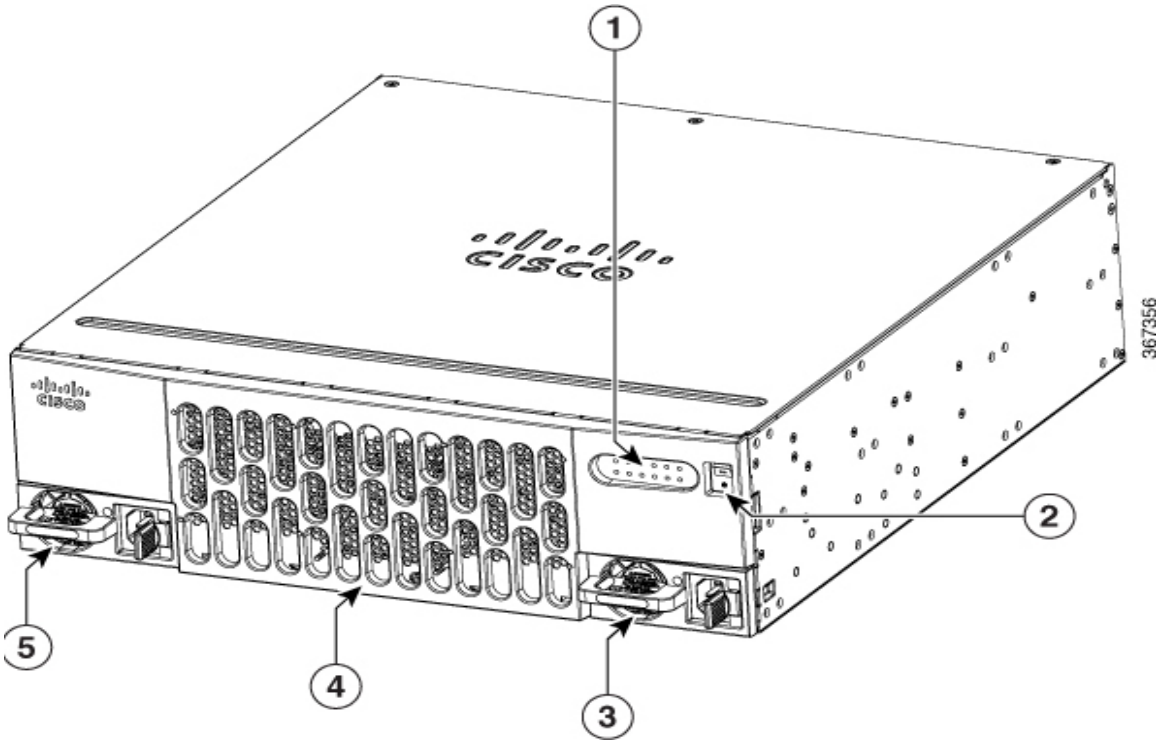

1	LED	**2**	Router power On/Off switch
3	Power supply unit (PSU1)	**4**	Router fan tray (hidden) behind removable bezel
5	Optional power supply unit (PSU0)		

Figure 1-2 Back Panel (I/O Side) Slots and Connectors on Cisco 4461 ISR

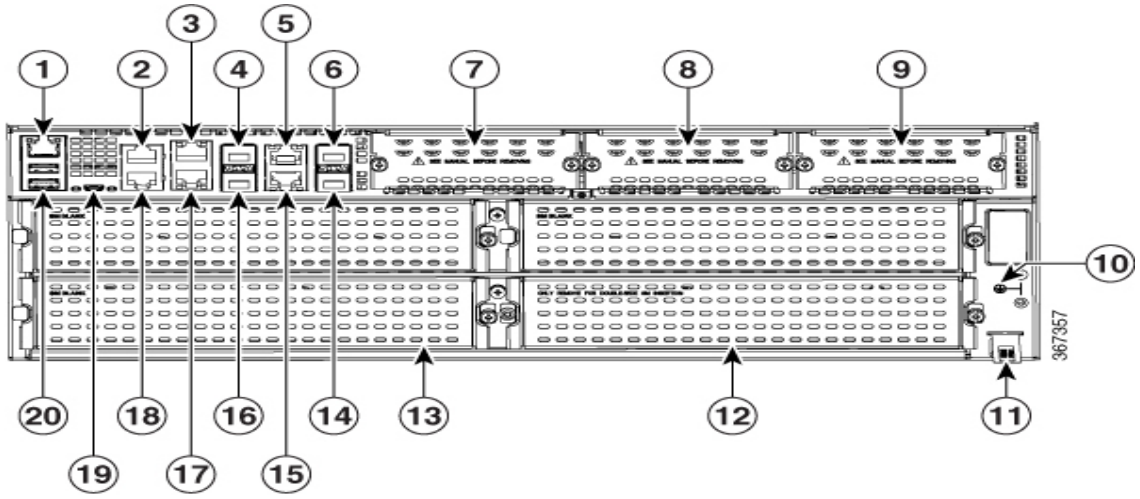

1	GE 0 management port	**2**	Auxiliary port
3	RJ-45 Gigabit Ethernet port (GE 0/0/0)	**4**	SFP/Gigabit Ethernet port (GE 0/0/0)
5	RJ-45 Gigabit Ethernet port (GE 0/0/2)	**6**	SFP+/10 Gigabit Ethernet port (TE 0/0/4)
7	NIM slot 1 (shown with slot divider removed).	**8**	NIM slot 2 (shown with slot divider removed).
9	NIM slot 3 (shown with slot divider removed).	**10**	Ground Connection
11	Slot for label	**12**	Enhanced Service Module (SM-X) with double wide
13	Enhanced Service Module (SM-X) 3	**14**	SFP+/10 Gigabit Ethernet port (TE0/0/5)
15	RJ-45 Gigabit Ethernet port (GE 0/0/3)	**16**	SFP/Gigabit Ethernet port (GE 0/0/1)
17	RJ-45 Gigabit Ethernet GE 0/01	**18**	Console Port
19	USB Console Port	**20**	USB Port

Figure 1-3 NIM and SM-X Slots

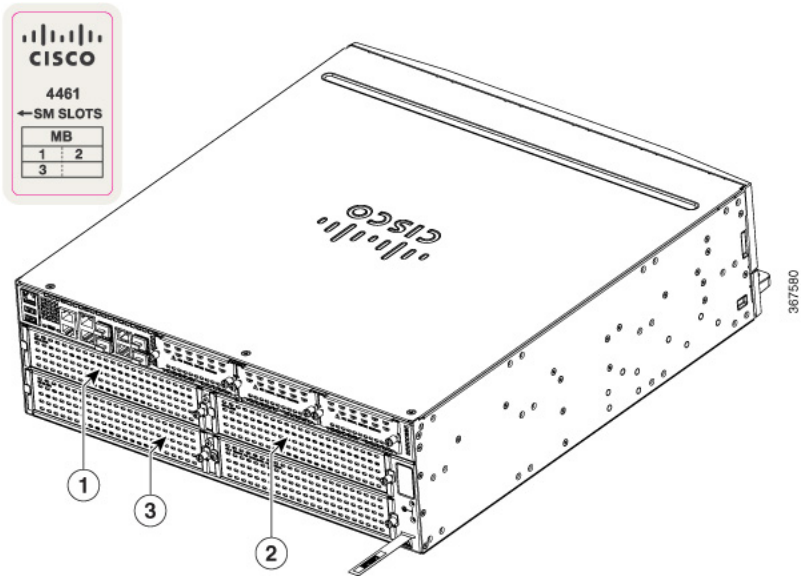

1	SM-X slot 1	**2**	SM-X slot 2
3	SM-X slot 3		

To remove an SM-X:

Step 1 Read the "Safety Warnings" section and disconnect the power supply before you replace any module.

Step 2 Access the SM-X slot. See Figure 1-3 for the various NIM and SM-X slot locations.

Step 3 Loosen the captive screws to open the slot cover.

Step 4 Pull the SM-X out of the connector on the motherboard. Keep the SM-X parallel with the motherboard to prevent damage to the slot and standoff.

Note When you remove the SM-X slot 2, it removes the blank slot which is attached to the special divider. See Figure 1-4.

Step 5 Place the SM-X in an anti-static bag to protect it from ESD damage.

Note For more details on installation of SM-Xs, NIMs, and Cisco E-Series Server Modules, see the hardware installation guide for the particular module you have purchased.

Figure 1-4 NIM and SM-X Slot with Divider

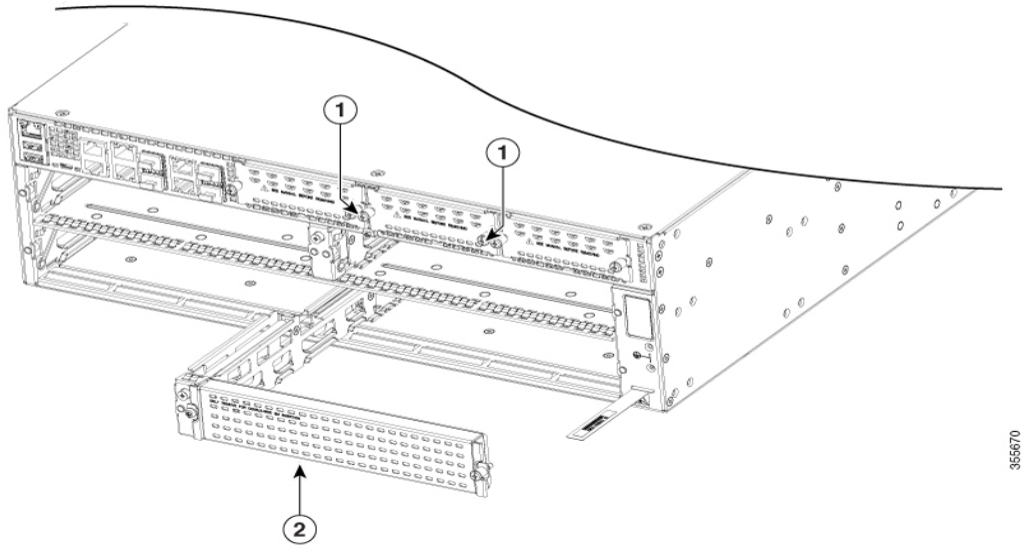

	NIM slot 1 and 2	**2**	SM-X slot divider

Figure 1-5 Bezel Side LEDS of the Cisco 4461 ISR Model

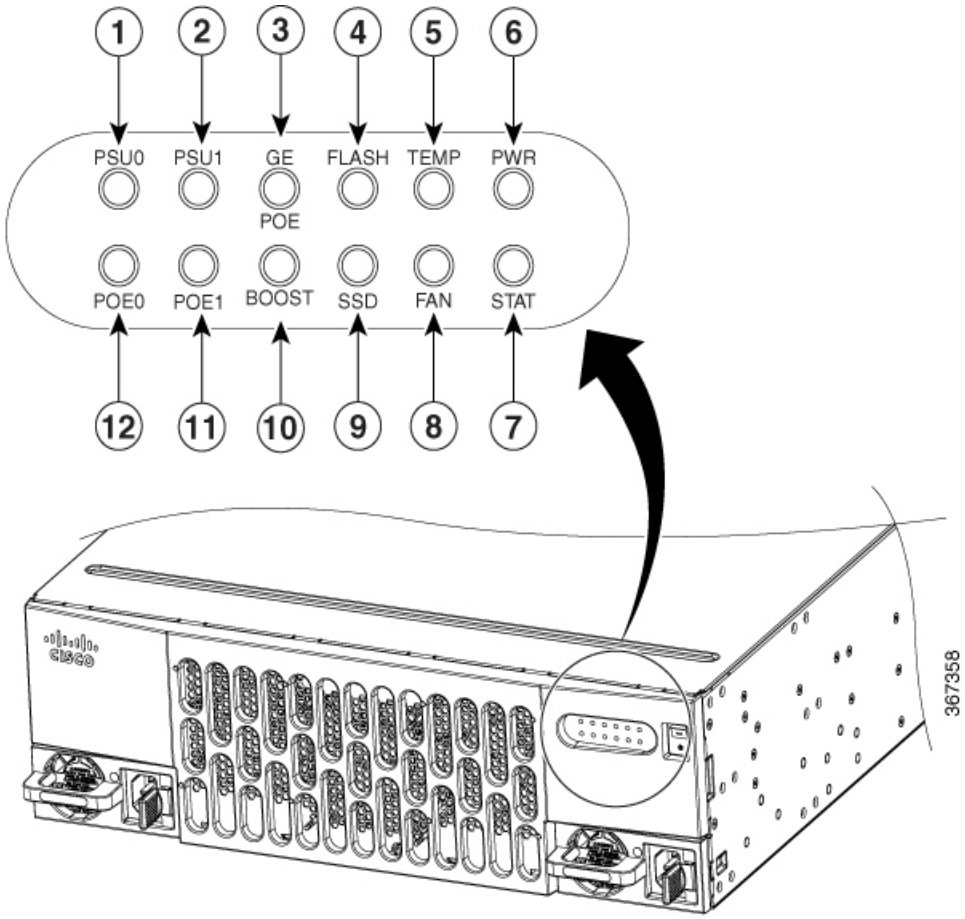

1	PSU0: Power supply unit 0	**2**	PSU1: Power supply unit 1
3	GE POE: Internal PoE daughter card status	**4**	FLASH: Compact flash status
5	TEMP: Temperature status	**6**	PWR: Power
7	STAT: System status	**8**	FAN: Fan status
9	M.2 SSD status	**10**	POE BOOST: Power over Ethernet boost mode
11	POE 1: Power over Ethernet 1status	**12**	POE 0: Power over Ethernet 0 status

Platform Summary

Figure 1-6 shows the internal view of Cisco 4461 with parts and module locations.

Figure 1-6 Platform Summary of Cisco 4461 ISR

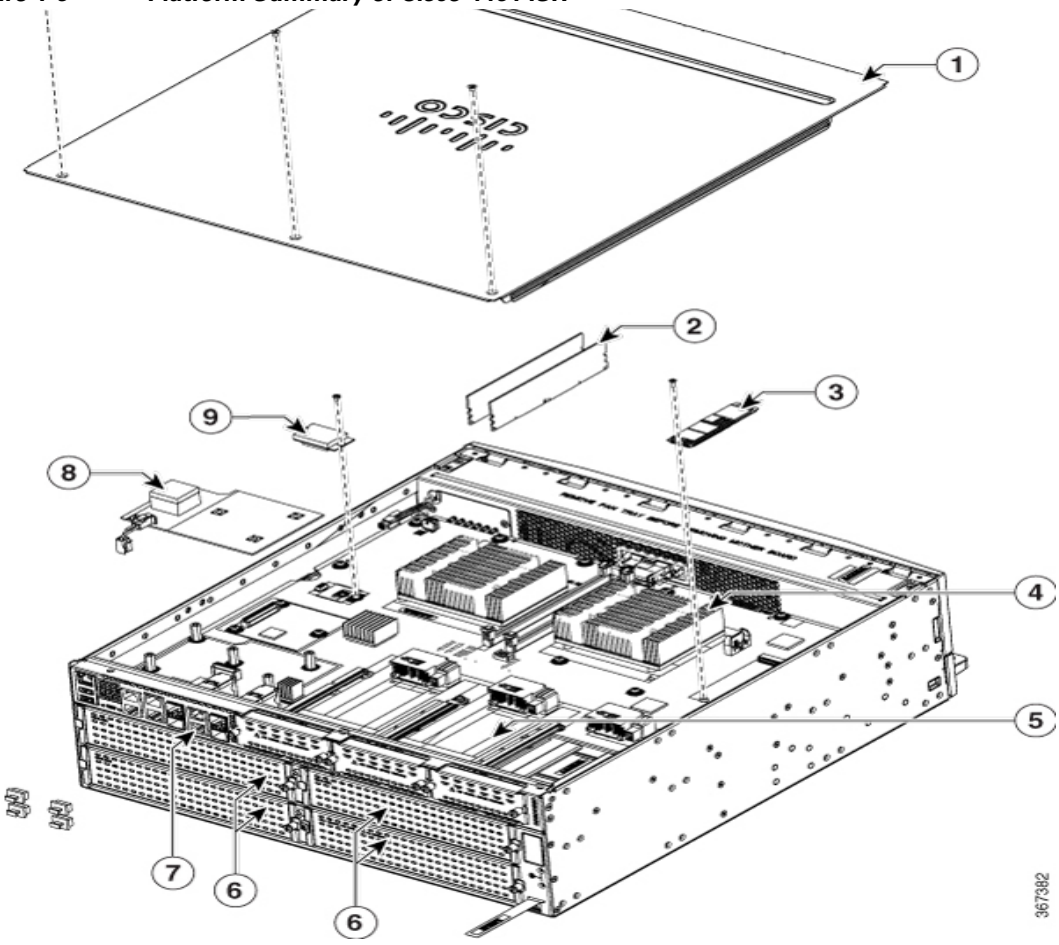

1	Cover	**2**	DIMMs
3	SSD M.2 storage device	**4**	CPU
5	NIM Slot	**6**	SM-X Slot 1, 2, and 3
7	RJ-45 Gigabit Ethernet port (GE 0/0/3)	**8**	POE daughter card
9	Flash Memory Card		

Cisco 4451-X ISR Chassis

Bezel view of the Cisco 4451-X ISR with two PSUs. Cisco 4451-X ISR routers support these slot types:
- Network Interface Modules (NIMs)
- Service modules (SM-X, like SM-X-1T3/E3)
- E-Series Server Modules.

Figure 1-7 Bezel View

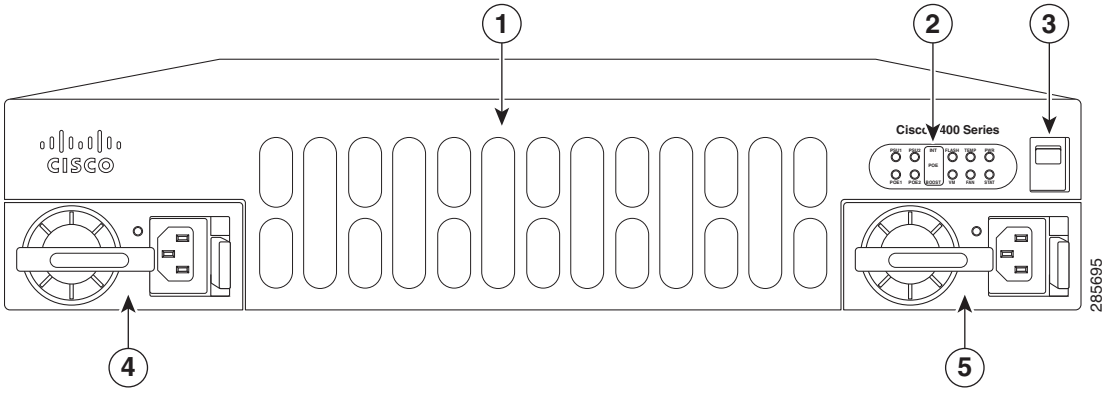

1	Router fan tray (hidden) behind removable bezel	**2**	LEDs
3	Router power On/Off switch	**4**	AC power supply unit (PSU0)
5	AC power supply unit (PSU1)		

Back panel slots and ports of the Cisco 4451-X ISR.

Figure 1-8 Back Panel (I/O Side) Slots and Connectors on Cisco 4451-X ISR

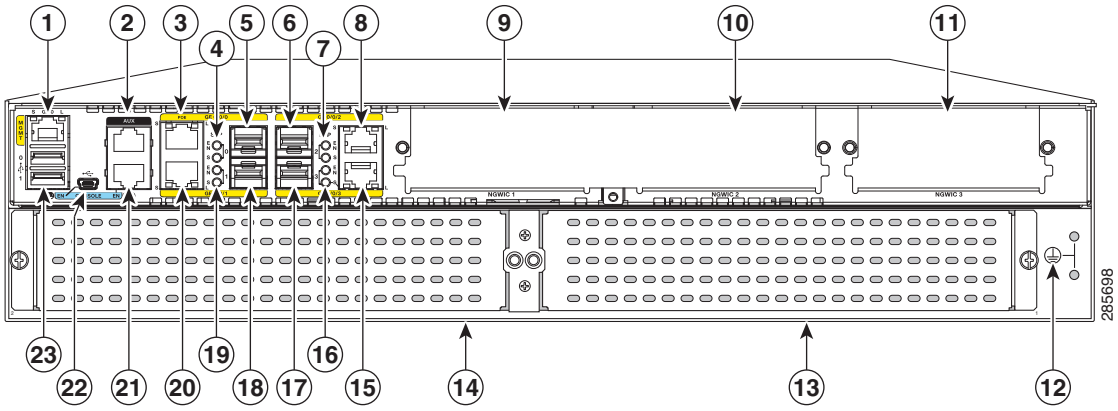

1	GE 0 management port	**2**	Auxiliary port
3	RJ-45 Gigabit Ethernet port (GE 0/0/0)	**4**	LEDs for the GE 0/0/0 interface (See Table 1-1 for detailed LED information)
5	SFP/Gigabit Ethernet port (GE 0/0/0)	**6**	SFP/Gigabit Ethernet port (GE 0/0/2)
7	LEDs for the GE 0/0/2 interface	**8**	RJ-45 Gigabit Ethernet port (GE 0/0/2)
9	NIM slot 1 (shown with slot divider removed).	**10**	NIM slot 2 (shown with slot divider removed).
11	NIM slot 3	**12**	Ground connection
13	Enhanced Service Module (SM-X) 2	**14**	Enhanced Service Module (SM-X) 1
15	RJ-45 Gigabit Ethernet port GE 0/0/3	**16**	LEDs for the GE 0/0/3 interface
17	SFP/Gigabit Ethernet GE 0/0/3	**18**	SFP Gigabit Ethernet GE 0/0/1
19	LEDs for the GE 0/0/1 interface	**20**	RJ-45 Gigabit Ethernet port GE 0/0/1
21	Serial console port	**22**	USB Type B mini port
23	USB 0 and USB 1		

Figure 1-9 Bezel Side LEDS of the Cisco 4451-X ISR Model

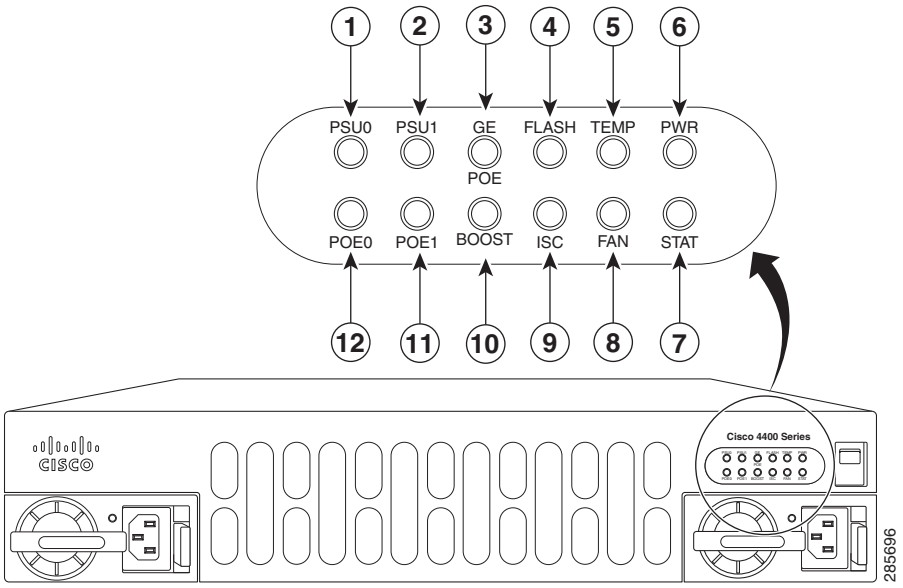

1	PSU0: Power supply unit 1	**2**	PSU1: Power supply unit 2
3	GE POE: Internal PoE daughter card status	**4**	FLASH: Compact flash status
5	TEMP: Temperature status	**6**	PWR: Power
7	STAT: System status	**8**	FAN: Fan status
9	ISC: Integrated Services Card status	**10**	POE BOOST: Power over Ethernet boost mode
11	POE 1: Power over Ethernet 1status	**12**	POE 0: Power over Ethernet 0 status

Figure 1-6 shows the internal view of Cisco 4451-X ISR with parts and module locations.

Figure 1-10 E-USB on the Cisco 4451-X ISR

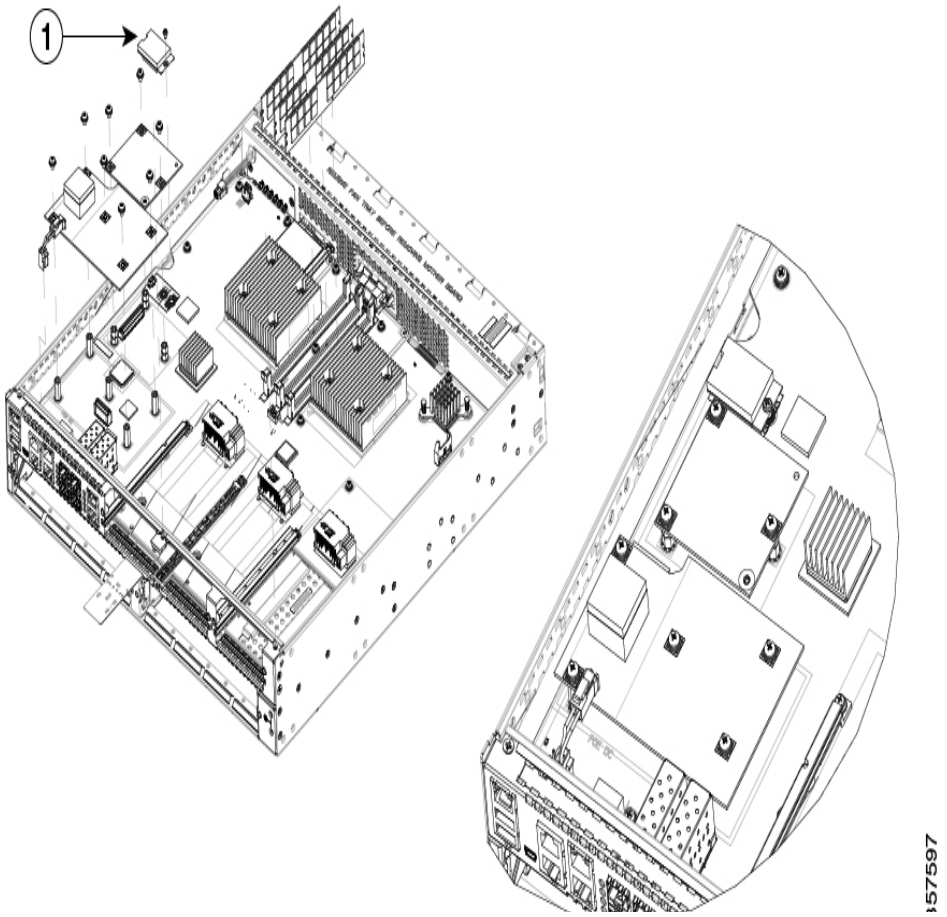

1	E-USB		

Figure 1-6 shows the internal view of Cisco 4451-X ISR with parts and module locations.

Figure 1-11 Compact Flash on the Cisco 4451-X ISR

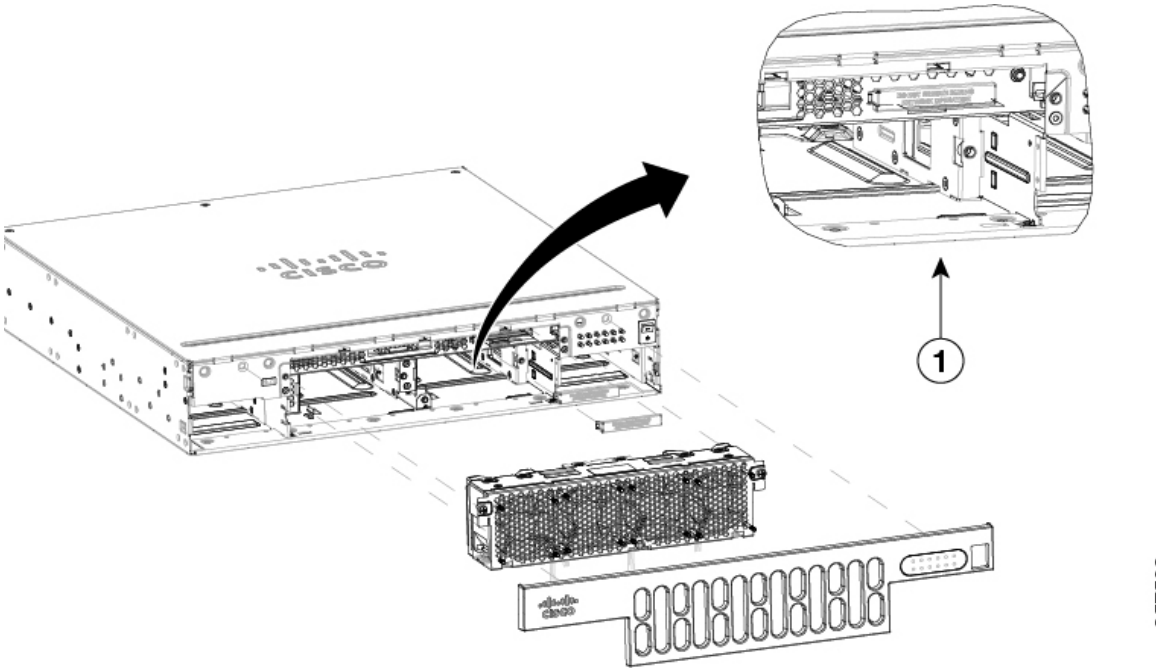

1	Compact Flash		

Platform Summary

Figure 1-6 shows the internal view of Cisco 4451-X ISR with parts and module locations.

Figure 1-12 Platform Summary of Cisco 4451-X ISR

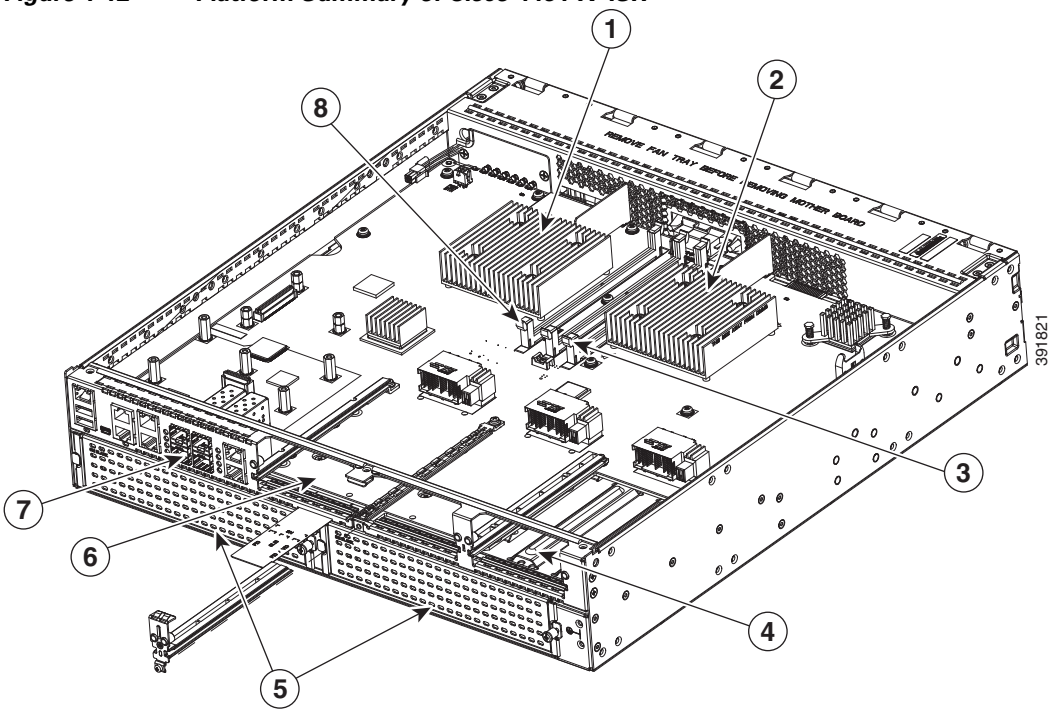

1	Forwarding plane processor	**2**	Control plane processor
3	Control plane processor DIMMs	**4**	NIM 3 (single-wide) slot
5	Enhanced Service Module (SM-X) slots	**6**	NIM slot 1 and 2 (shown with slot divider removed)
7	SFP GE ports	**8**	Forwarding plane processor DIMM

Cisco 4431 ISR Chassis

Cisco 4431 ISR supports the Network Interface Modules (NIMs) and Integrated Services Card (ISC slots for PVDM4s).

Figure 1-13 Bezel View of Cisco 4431 ISR with Two Power Supply Units

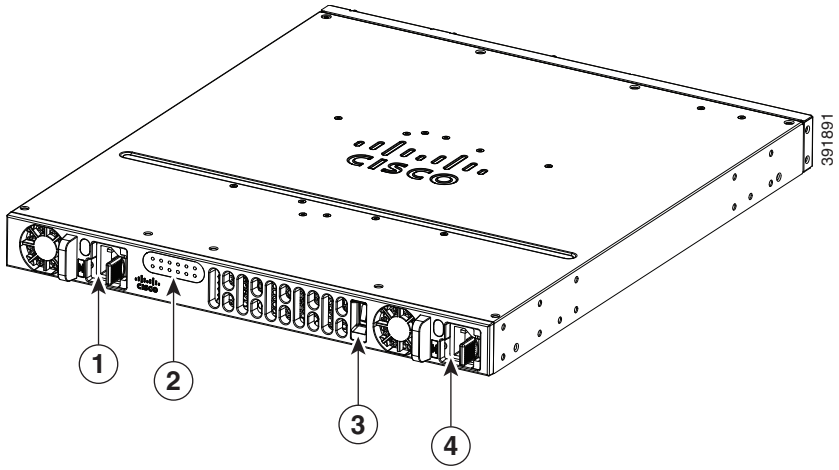

1	Power supply unit (PSU1)	**2**	LEDs
3	On/Off switch	**4**	Optional power supply unit (PSU0)

Figure 1-14 View of Cisco 4431 ISR Chassis

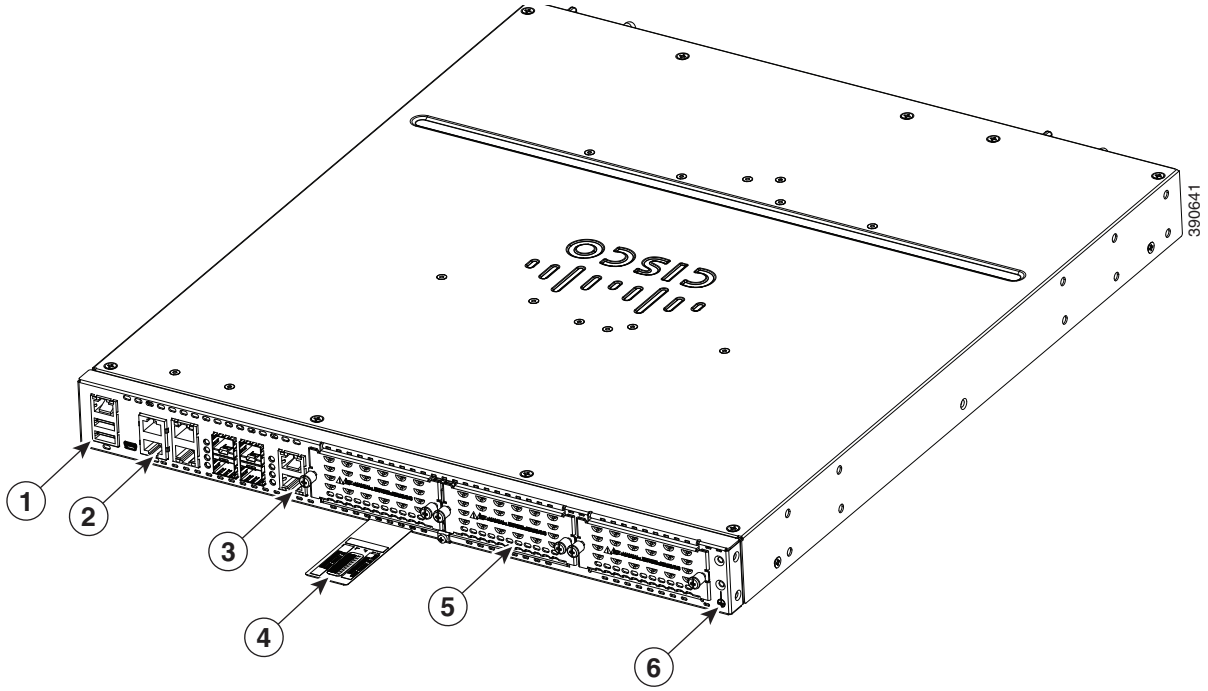

1	USB ports	**2**	GE ports
3	Screws to open the NIM slot	**4**	Router label tray
5	NIM slot (with cover)	**6**	Ground connection

Figure 1-15 LEDs on the Cisco 4431 ISR

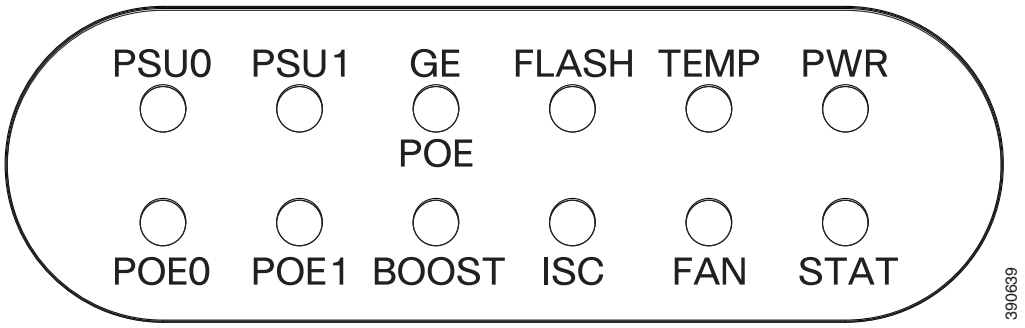

For detailed information on LEDs, see the "LED Indicators" section on page 1-32.

Platform Summary

Figure 1-16 shows the internal view of Cisco 4431 ISR with parts and module locations.

Figure 1-16 Platform Summary of the Cisco 4431 ISR

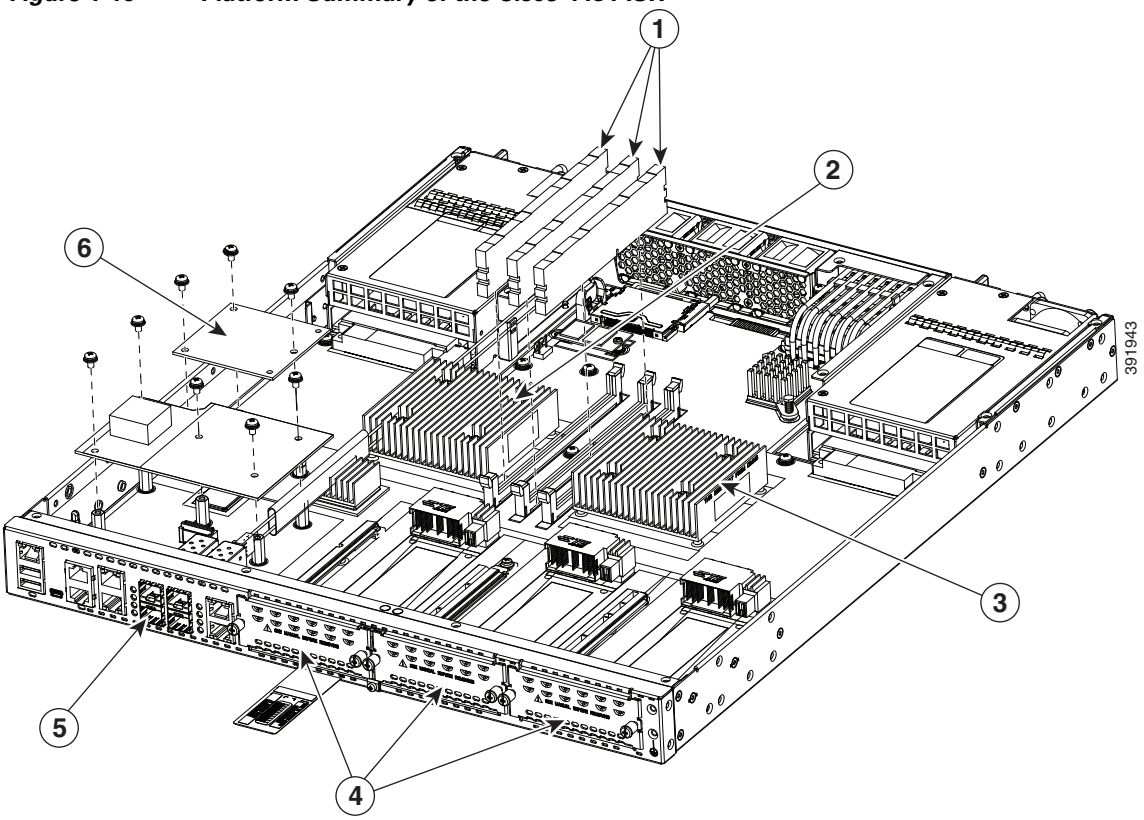

1	DIMMs	**2**	Forwarding plane processor
3	Control plane processor	**4**	NIMs
5	SFP GE ports	**6**	PVDM card

Cisco 4351 ISR Chassis

This section contains the following views of Cisco 4351ISR chassis:

- Power Supply and Bezel Side View of Cisco 4351 ISR (Figure 1-17)
- Back Panel Ports, Slots, and Serial Number on Cisco 4351 ISR (Figure 1-18)
- Ports on Cisco 4351 ISR (Figure 1-19)
- LEDs on Cisco 4351 ISR (Figure 1-20)

Figure 1-17 Power Supply and Bezel Side View of Cisco 4351 ISR

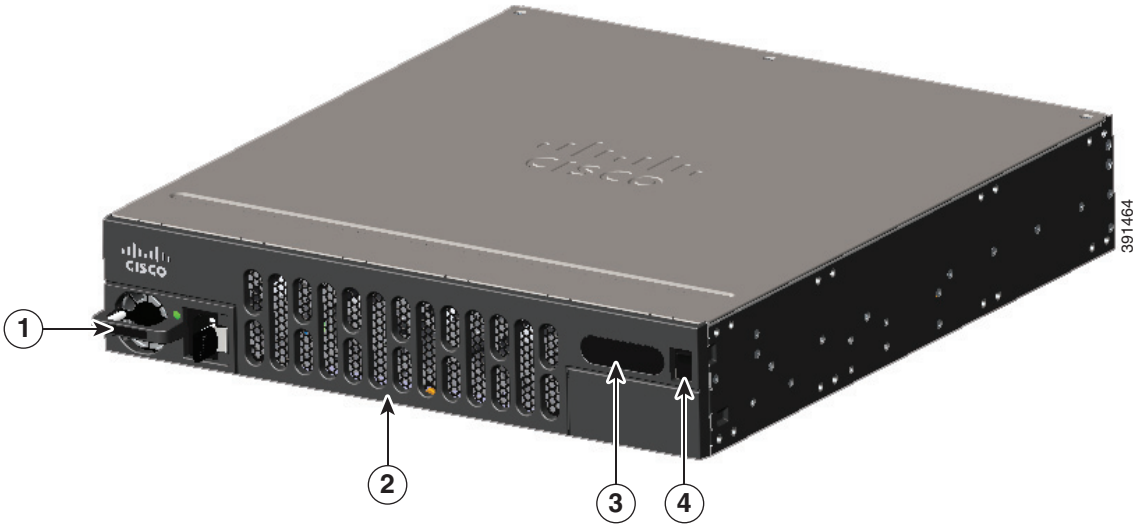

1	Power supply unit	**2**	Router fan tray (hidden behind the removable bezel)
3	LEDs	**4**	Router power On/Off switch

Figure 1-18 Back Panel Ports, Slots, and Serial Number on Cisco 4351 ISR

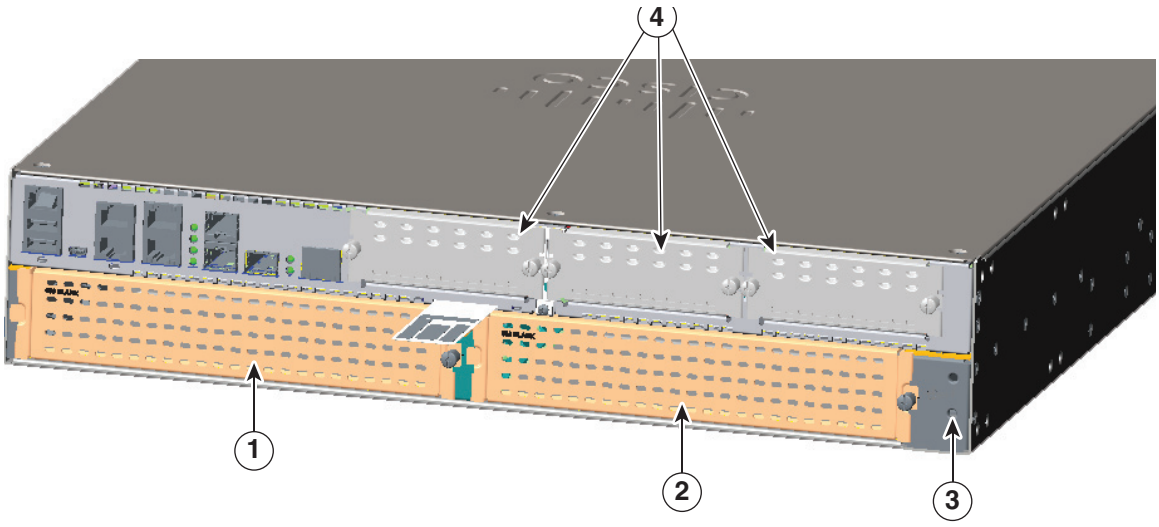

1	Enhanced Service Module (SM-X) slot	**2**	Enhanced Service Module (SM-X) slot
3	Ground connection	**4**	NIM slots

Figure 1-19 Ports on Cisco 4351 ISR

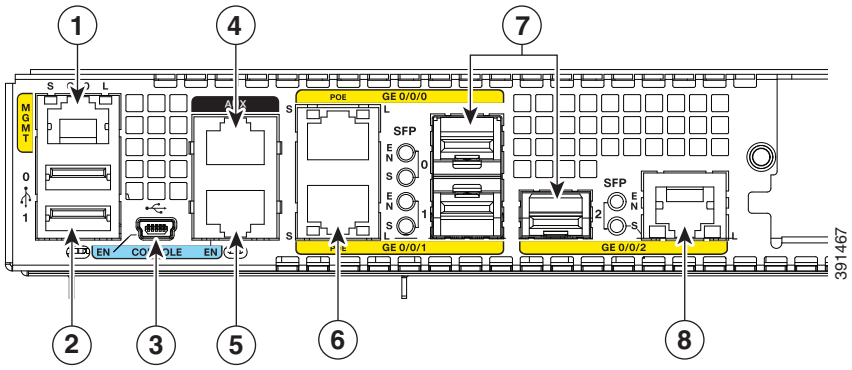

1	GE management port	**2**	USB Type A port
3	USB Type B mini port	**4**	Auxiliary port
5	Console port	**6**	RJ-45 port (GE 0/0/0, GE 0/0/1)
7	SFP port (GE 0/0/0, GE 0/0/1, GE 0/0/2)	**8**	RJ-45 port (GE/0/0/2)

Figure 1-20 LEDs on Cisco 4351 ISR

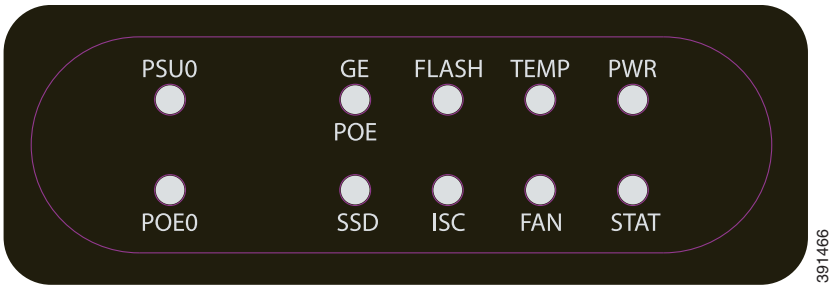

For detailed information on LEDs, see the "LED Indicators" section on page 1-32.

Platform Summary

Figure 1-21 shows the internal view of Cisco 4351 ISR chassis with parts and module locations.

Figure 1-21 Platform Summary of Cisco 4351 ISR Chassis

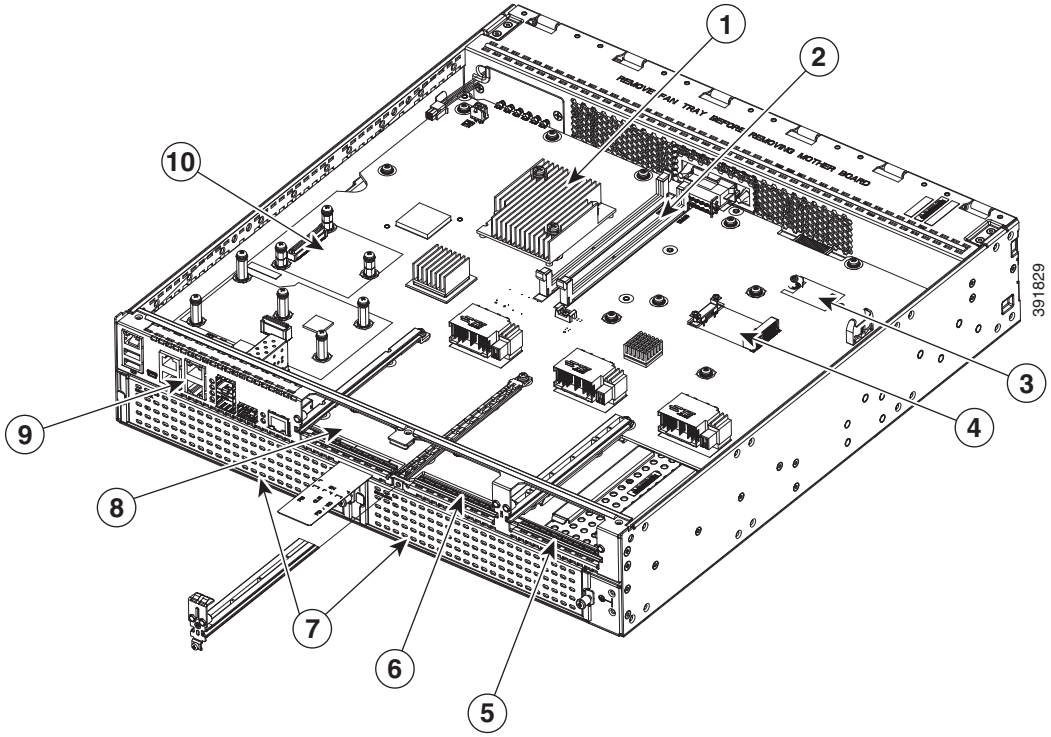

1	CPU	**2**	DIMMs
3	Flash memory card connector	**4**	SSD mSATA connector
5	NIM slot 3	**6**	NIM slot 2
7	SM-X slots	**8**	NIM slot 1
9	RJ-45 GE ports	**10**	ISC slot

Cisco 4331 ISR Chassis

This section contains the following views of Cisco 4331 ISR router:

- Bezel Side Ports and LEDs on Cisco 4331 ISR (Figure 1-22)
- Back Panel Ports and Slots on Cisco 4331 ISR (Figure 1-23)
- Ground Connection on Cisco 4331 ISR (Figure 1-24)

Figure 1-22 Bezel Side Ports and LEDs on Cisco 4331 ISR

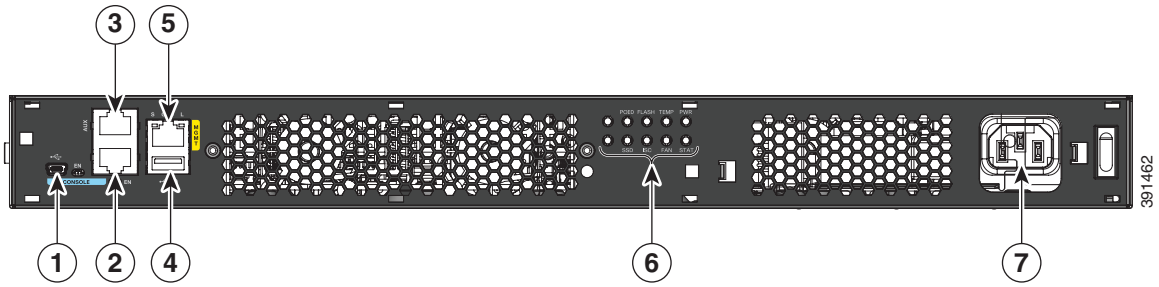

1	USB Type B mini port	**2**	Serial console port
3	AUX port	**4**	USB Type A port
5	Management port	**6**	LEDs
7	AC Power		

Figure 1-23 Back Panel Ports and Slots on Cisco 4331 ISR

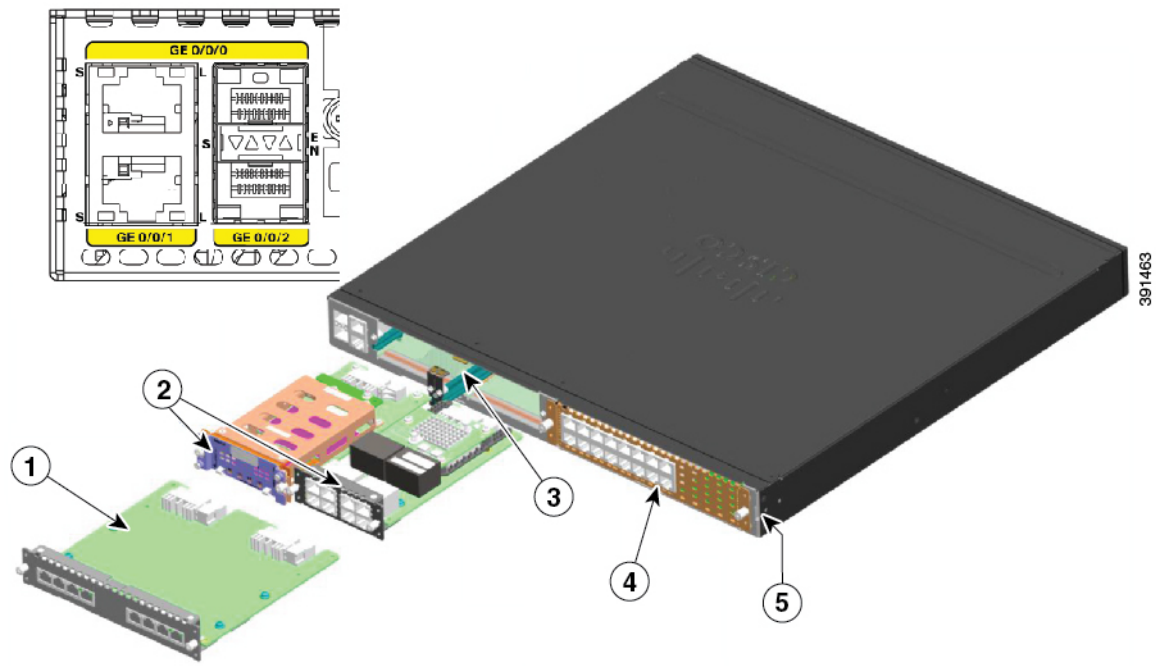

1	Double-wide NIM	**2**	NIMs
3	Removable module slot divider	**4**	SM-X slot
5	Ground connection		

For detailed information on LEDs, see the "LED Indicators" section on page 1-32.

Figure 1-24 Ground Connection on Cisco 4331 ISR

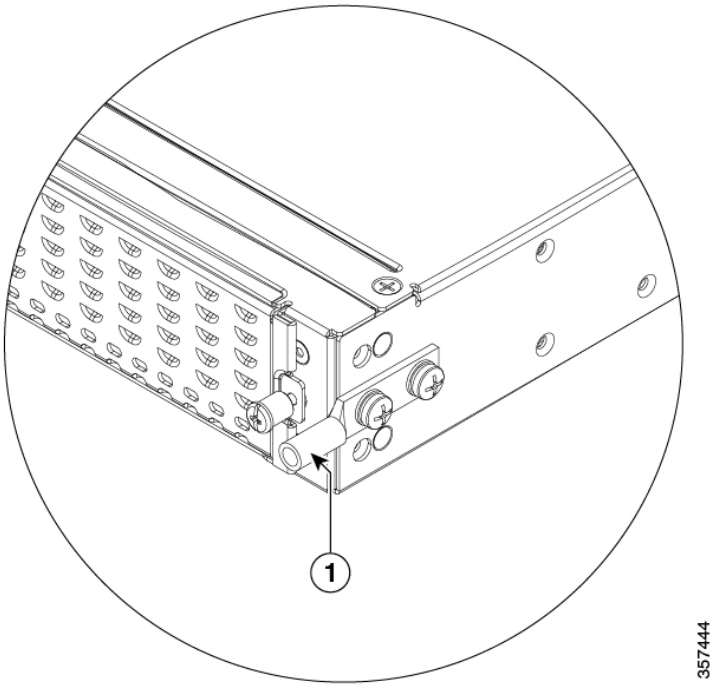

1	Ground Connection		

Platform Summary

Figure 1-25 shows the internal view of the Cisco 4431 ISR with parts and module locations.

Figure 1-25 Platform Summary of Cisco 4331 ISR Chassis

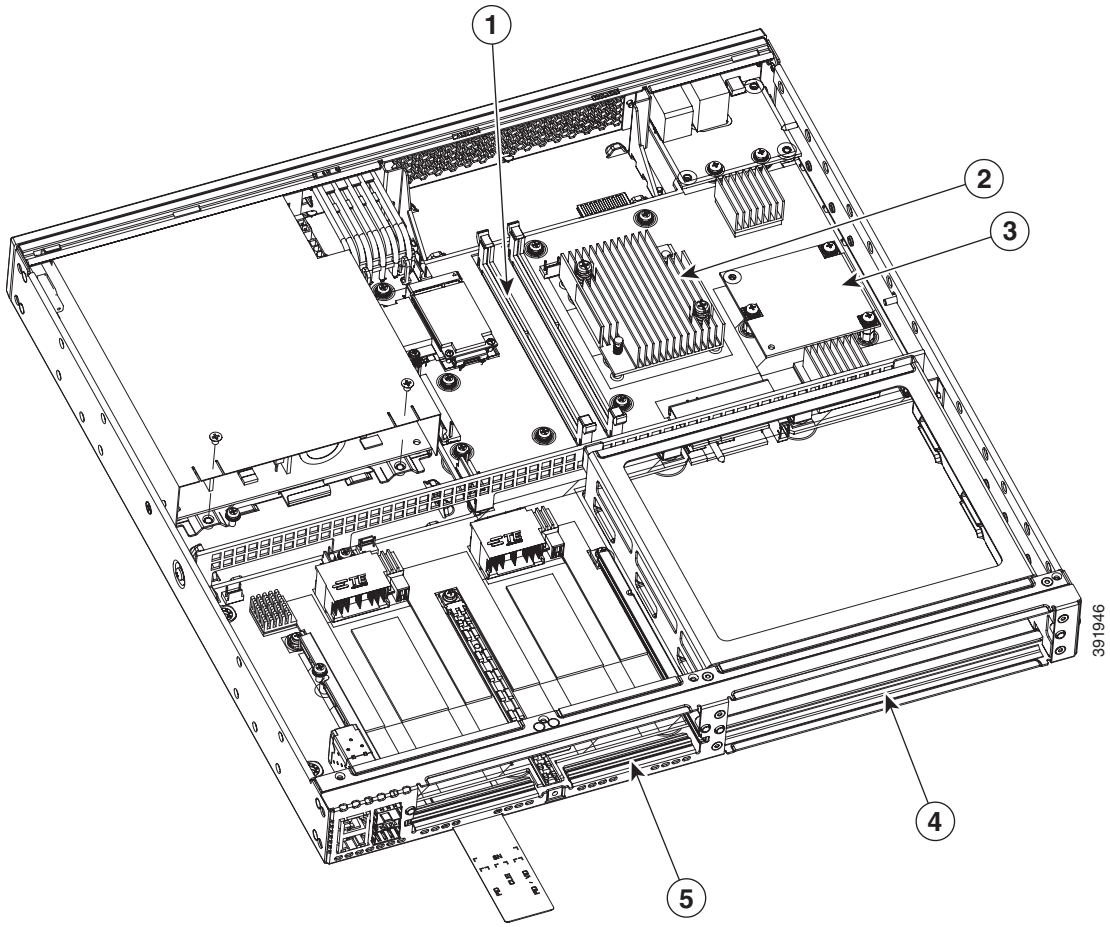

1	DIMMs	**2**	CPU
3	ISC slot	**4**	SM-X slot
5	NIM slot		

Cisco 4321 ISR Chassis

This section contains the following views of Cisco 4321 ISR router:

- Back Panel Ports on Cisco 4321 ISR (Figure 1-26)
- Back Panel (I/O Side) View of Cisco 4321 ISR (Figure 1-27)
- LEDs on Cisco 4321 ISR (Figure 1-28)

Figure 1-26 Back Panel Ports on Cisco 4321 ISR

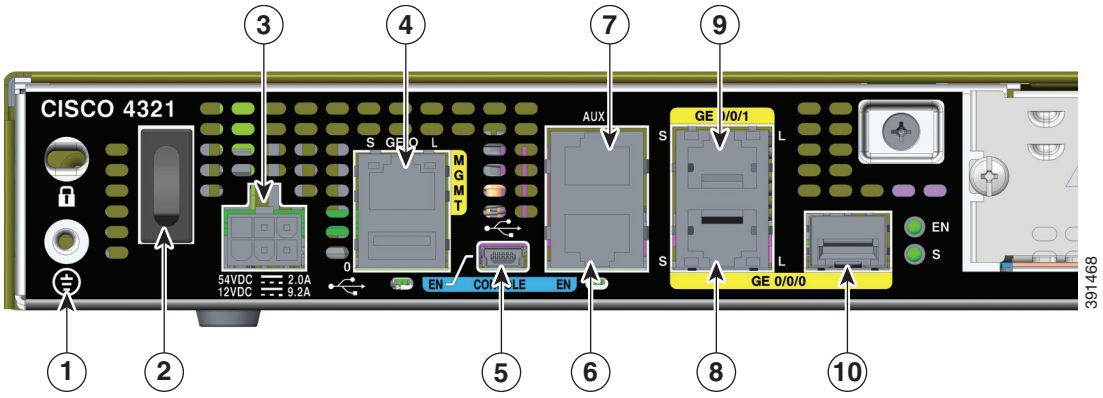

1	Grounding	**2**	Power switch
3	Power input connector	**4**	GE “MGMT” port (with USB port below)
5	USB Type B mini port	**6**	Console port
7	Auxiliary port	**8**	GE 0/0/0 (copper cable) port
9	GE 0/0/1 RJ-45 (copper cable) port	**10**	GE 0/0/0 SFP (fiber-optic) port

Figure 1-27 Back Panel (I/O Side) View of Cisco 4321 ISR

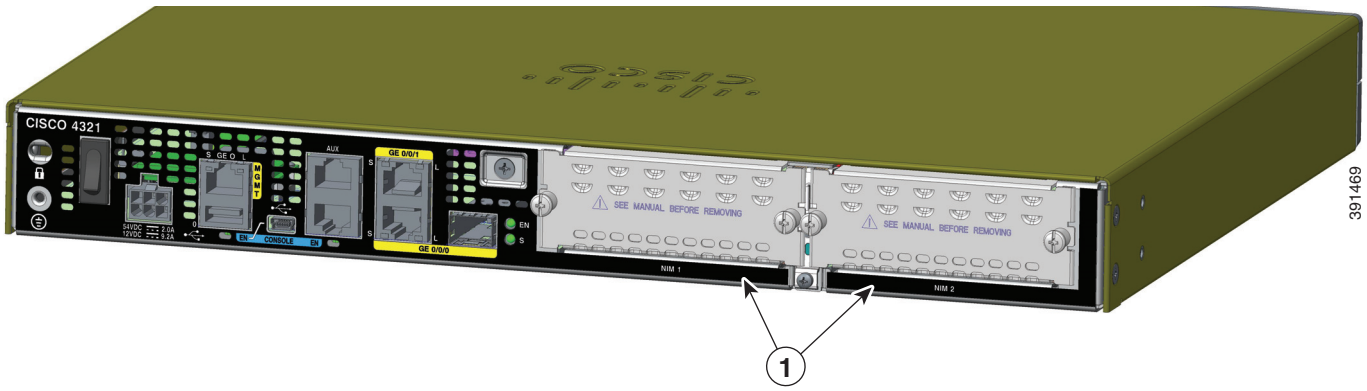

1	NIM slots

Figure 1-28 LEDs on Cisco 4321 ISR

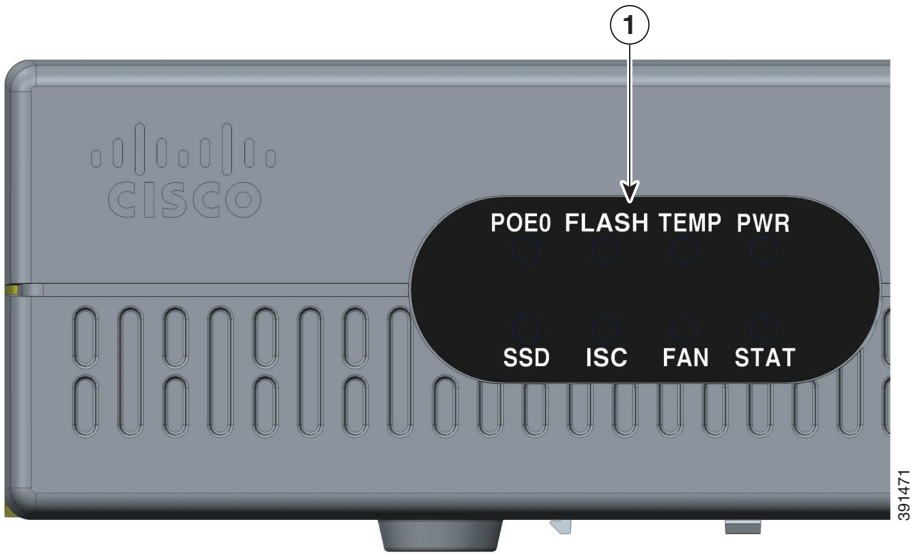

1	LEDs

For detailed information on LEDs, see the "LED Indicators" section on page 1-32.

Platform Summary

Figure 1-29 shows the internal view of Cisco 4321 ISR with parts and module locations.

Figure 1-29 Platform Summary of Cisco 4321 ISR Chassis

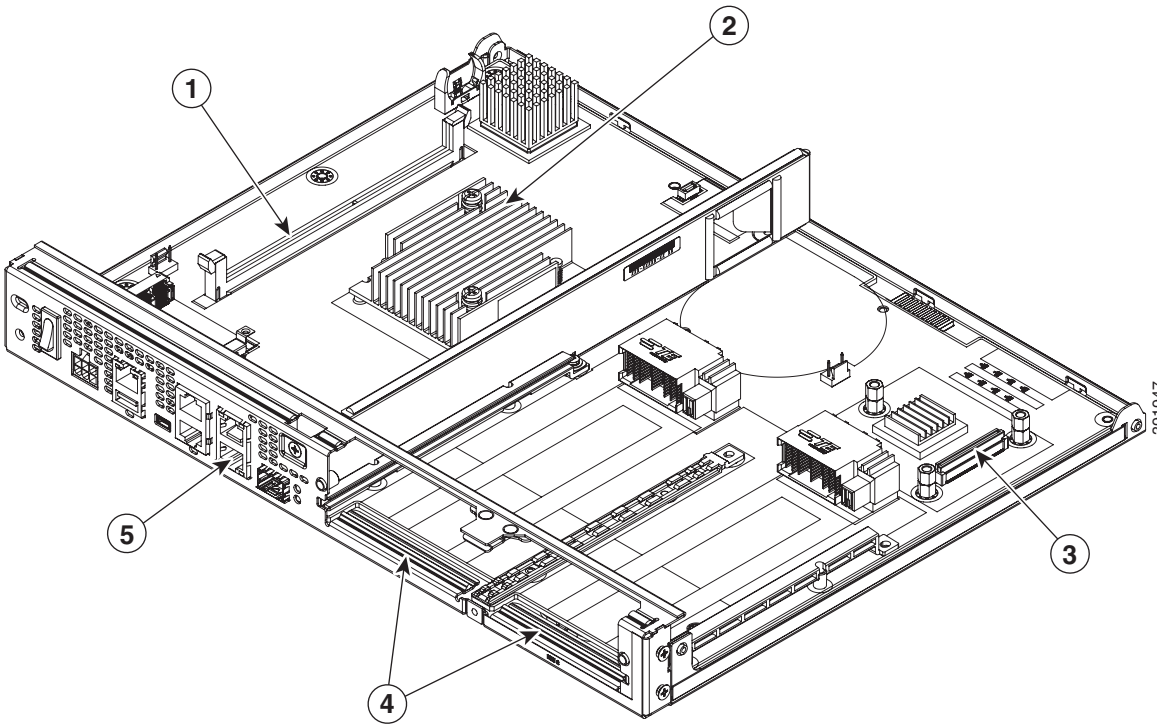

1	DIMM	**2**	CPU
3	ISC slot	**4**	NIM slots
5	GE ports		

Cisco 4221 ISR Chassis

This section contains the following views of Cisco 4221 ISR router:

- Back Panel Ports on Cisco 4221 ISR (Figure 1-30)
- Back Panel (I/O Side) View of Cisco 4221 ISR (Figure 1-31)
- LEDs on Cisco 4221 ISR (Figure 1-32)

Figure 1-30 Back Panel Ports on Cisco 4221 ISR

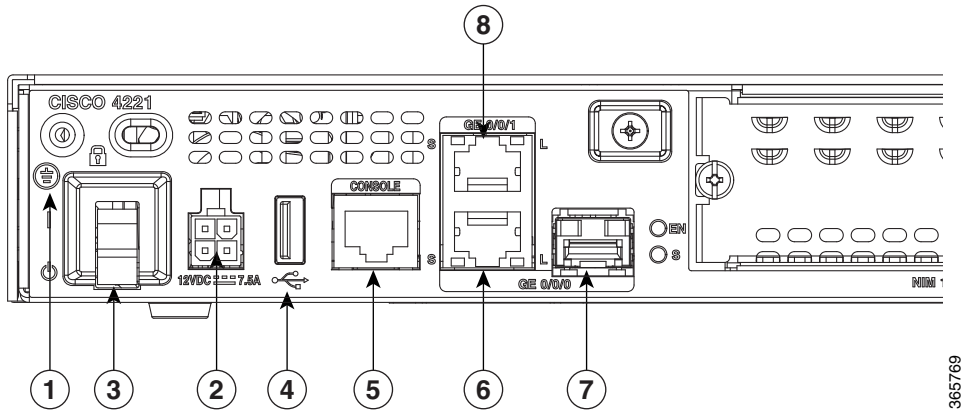

1	Grounding	**2**	Power input connector
3	Power switch	**4**	USB
5	Console port	**6**	GE 0/0/0 RJ-45 (copper cable) port
7	GE 0/0/0 SFP (fiber-optic) port	**8**	GE 0/0/1 (copper cable) port

Figure 1-31 Back Panel (I/O Side) View of Cisco 4221 ISR

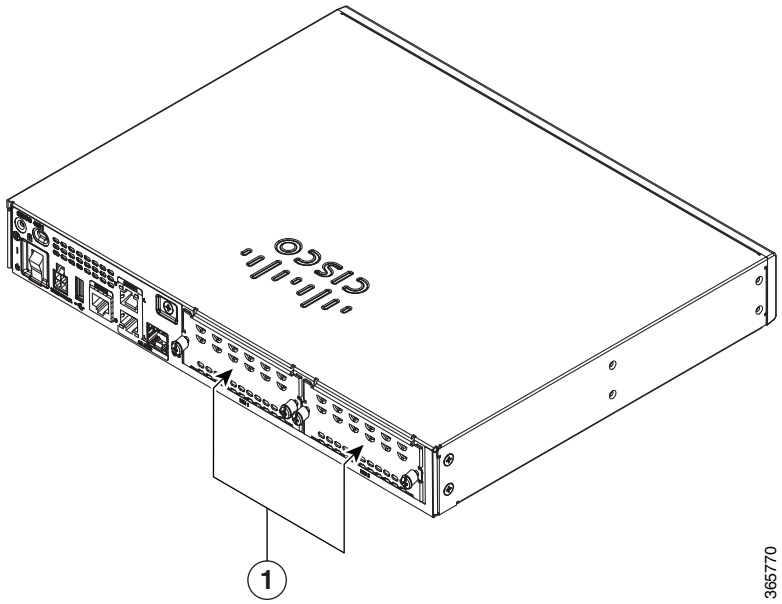

1	NIM slots

Figure 1-32 LEDs on Cisco 4221 ISR

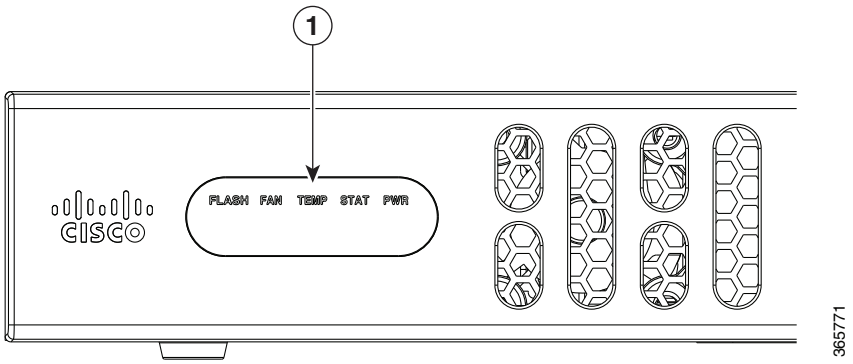

1	LEDs

For detailed information on LEDs, see the "LED Indicators" section on page 1-32.

Platform Summary

Figure 1-33 shows the internal view of Cisco 4221 ISR with parts and module locations.

Figure 1-33 Platform Summary of Cisco 4221 ISR Chassis

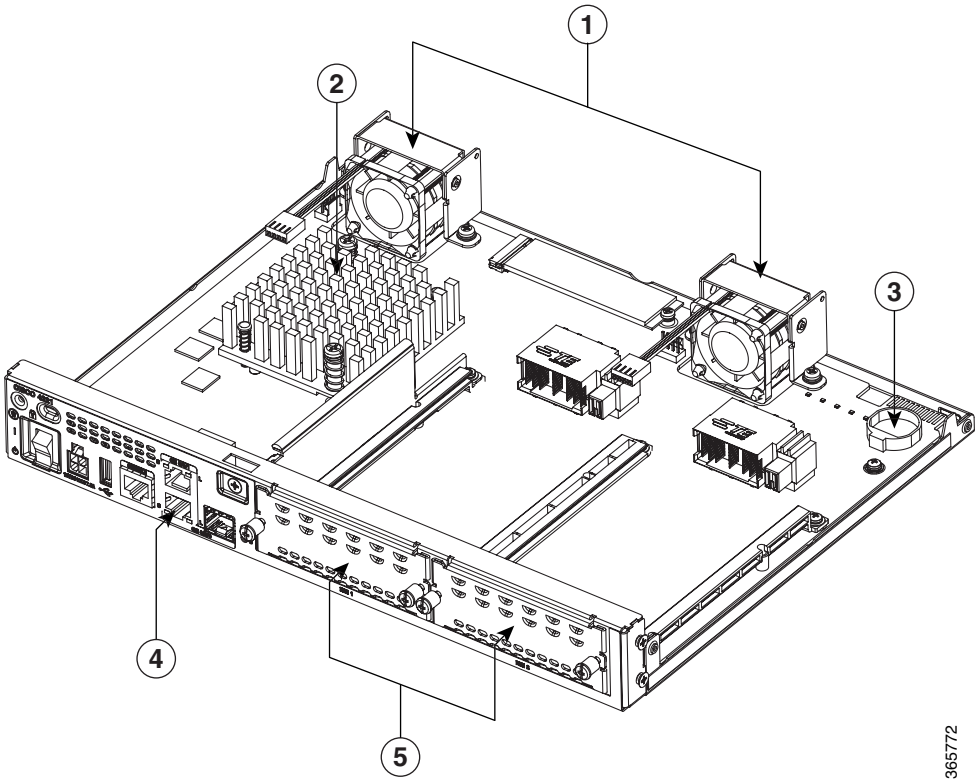

1	Fan	**2**	CPU
3	Battery	**4**	GE 0/0/0/0 RJ-45 (copper cable) port
5	NIM slots		

Locate Product Identification Details

Software License

The serial number (SN), product ID (PID), version ID (VID), and Common Language Equipment Identifier (CLEI) are printed on a label on the back of the router or on a label tray located on the router chassis or motherboard.

To obtain a software license, you need a product authorization key (PAK) and the unique device identifier (UDI) of the device where the license is to be installed.

The UDI has two main components:

- Product ID (PID)
- Serial number (SN)

The UDI can be viewed using the **show license udi** command in privileged Exec mode in Cisco Internet Operating System (IOS) software.

For additional information on the UDI or how to obtain a PAK, see the *Cisco Software Activation on Integrated Services Routers and Cisco Integrated Service Routers Generation 2* document at cisco.com.

Labels on Cisco 4000 Series ISRs

Figure 1-34 shows the location of the labels on Cisco 4451-X ISR. Label are located at the same location on all routers in the Cisco 4000 series. Though your router may be different from the one shown in Figure 1-34.

Figure 1-34 Label Location on Cisco 4451-X ISR

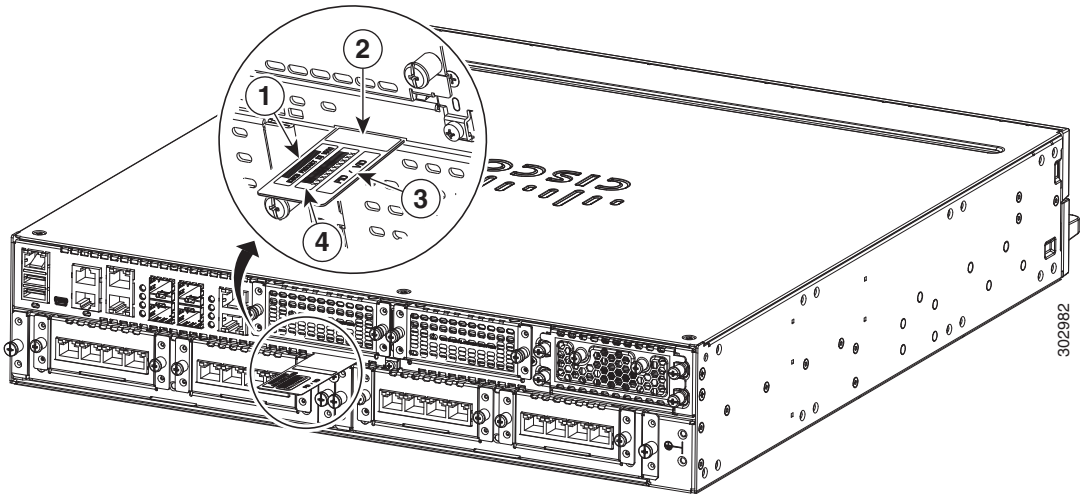

1	Product ID	**2**	Serial Number
3	PID/VID	**4**	CLEI

Additional Help for Locating Cisco 4000 Series ISRs Labels

Use the Cisco Product Identification (CPI) tool to find labels on the router. The tool provides detailed illustrations and descriptions of where labels are located on Cisco products. It includes the following features:

- A search option that allows browsing for models by using a tree-structured product hierarchy
- A search field on the final results page that makes it easier to look up multiple products
- End-of-sale products clearly identified in results lists

The tool streamlines the process of locating serial number labels and identifying products. Serial number information expedites the entitlement process and is required for access to support services.

Hardware Features of Cisco 4000 Series ISRs

This section describes the hardware features of Cisco 4000 Series ISRs.

- Built-In Interface Ports, page 1-30
- LED Indicators, page 1-32
- Fans, Ventilation, and Airflow, page 1-41

Built-In Interface Ports

Cisco 4000 Series ISRs have multiple 10/100/1000 front panel ports, SFPs, and 10/100/1000 management ports.

Dual Mode GE or SFP Ports

There are dual mode ports available on the router which can function as GE or SFP ports.

GE Ports

The GE RJ-45 copper interface ports support 10BASE-T, 100BASE-TX, and 1000BASE-T.

SFP Ports

The small-form-factor pluggable (SFP) ports support, 1000BASE-LX/LH, 1000BASE-SX, 1000BASE-ZX, and Coarse Wavelength-Division Multiplexing (CWDM-8) modules, as well as 100Mbs SFP modules.

The SFP port shares the same physical port as an RJ-45 GE port with the same number. At a time, it can be used for only one function. As described in the IEEE 802.3ah specification, the SFP port supports auto-media-detection, auto-failover, and remote fault indication (RFI).

Use the **media-type** command to enable the auto-media-detection and auto-failover features.

You can configure the SFP port by using the **media-type** configuration command to select either the RJ-45 or the SFP connector. When the media-type is not configured, by default, the auto-select feature is enabled. The auto-select feature automatically detects the media that is connected and links it up. If both media are connected, the media that comes up first is linked, and it is treated as the primary media. This primary media is explicitly indicated as an SFP or RJ-45 link. When the router receives an indication that the primary media is down, the secondary failover media is enabled. After the switchover, when the primary media is later restored, the media does not switch back to the primary media. By default, the RJ-45 port is configured as the primary media-type and if it fails, the media failovers to the SFP port. Conversely, when the SFP port is configured as the primary media-type and if it fails, the media switches to the RJ-45 port.

USB Serial Console Port

The Mini-USB type B serial port can be used as an alternative to the RJ-45 console port. For Windows operating systems earlier than Windows 7, you must install a Windows USB device driver before using the USB console port.

Note Cisco 4461 supports Mini-USB type B serial port and Micro-USB type B serial port.

Front Panel PoE+ Ports

On Cisco 4451-X ISR and Cisco 4351 ISR, two front panel Ethernet ports are PoE+ (802.3at) compliant ports. These are ports GE 0/0/0 and GE 0/0/1. Cisco 4431 ISR, Cisco 4321 ISR and Cisco 4221 do not support front panel PoE+.

System PoE power supplies do not provide power to the front panel ports.

Internal PoE Daughter Card

The internal PoE daughter card provides a total of 30.8 watts of power across the two ports.

LED Indicators

Table 1-1 summarizes the LED indicators that are located in the router bezel or chassis, but not on the interface cards and modules.

Note For module LEDs, please refer to the respective module installation guides for each module.

1

Table 1-1 LED Descriptions (Applies to Cisco 4461 ISR, Cisco 4451-X ISR, Cisco 4431 ISR, and Cisco 4351 ISR)

LED	Represents	Color	Description	Location	Available On
STAT	System Status	Solid green	System operates normally.	Bezel side	All models
		Blinking amber	BIOS/Rommon is booting.		
		Amber	BIOS/Rommon has completed booting, and system is at Rommon prompt or booting platform software.		
		Off	System is not out of reset or BIOS image is not loadable.		
TEMP	Temperature Status	Solid green	All temperature sensors in the system are within acceptable range.	Bezel side	All models
		Amber	One or more temperature sensors in the system are outside the acceptable range.		
		Off	Temperature is not being monitored.		
FAN	Fan Status	Green	All fans are operating.	Bezel side	All models
		Amber	One fan has stopped working.		
		Blinking Amber	Two or more fans have stopped working, or the fan tray has been removed.		
		Off	Fans are not being monitored.		
L (left)	Ethernet ports 0 and 1 Link	Green	Ethernet cable is present and link is established with other side or PoE power is enabled for this port.	I/O side	All models
		Off	No link.		
S (left)	Speed of Ethernet ports 0 and 1	Green Blinking	Blink frequency indicates port speed: • 1 blink+ pause - FE or GE port operating at 10 Mb/s • 2 blinks + pause - FE or GE port operating at100 Mb/s • 3 blinks + pause - GE port operating at1000 Mb/s	I/O side	All models
		Off	No link or a non-Ethernet 802.3af/t capable device is plugged in and powered over the PoE.		

Table 1-1 LED Descriptions (Applies to Cisco 4461 ISR, Cisco 4451-X ISR, Cisco 4431 ISR, and Cisco 4351 ISR)

LED	Represents	Color	Description	Location	Available On
L (right)	Ethernet ports 2 and 3[1] and Management Ethernet Link	Green	Ethernet cable is present and link is established with other side.	I/O side	All models
		Off	No link.		
S (right)	Ethernet ports 2, and 3[1] and Management Ethernet Speed	Green	Blink frequency indicates port speed: • 1 blink+ pause - FE or GE port operating at 10 Mb/s • 2 blinks + pause - FE or GE port operating at100 Mb/s • 3 blinks + pause - GE port operating at1000 Mb/s	I/O side	All models
		Off	No link		
SFP EN	Port 0, 1, 2, and 3 Enable	Green	Present and enabled.	I/O side	All models[1]
		Amber	Present with failure.		
		Off	Not present.		
SFP S	Status of Ports 0, 1, 2, and 3	Blinking Green	Blinking frequency indicates port speed. See the definition for the S LED.	I/O side	All models[1]
		Amber	Initialized with error.		
		Off	Not present.		
L/A	SFP+port 0/1 Link Active	Green	Link established.	I/O side	Cisco 4461 ISR
		Blinking Green	Packets being transmitted.		
		Off	Not present.		
SER CON (right)	Serial Console Active	Green	Active console port is RJ-45. **Note** When this LED is on, the USB CON LED will be off.	I/O side	All models
USB CON (left)	USB Console Active	Green	Active console port is USB. **Note** When this LED is on, the SER CON LED will be off.	I/O side	All models
SSD	mSATA/M.2 Slot Status	Green	SSD mSATA/M.2 present and enabled.	Bezel side	Cisco 4351ISR and Cisco 4461 ISR
		Amber	Initialized with error.		
		Off	Not present.		
ISC	ISC Slot Status	Green	PVDM4 is present and is enabled.	Bezel side	All models[2]
		Amber	Initialized with error.		
		Off	Not present.		

Table 1-1 LED Descriptions (Applies to Cisco 4461 ISR, Cisco 4451-X ISR, Cisco 4431 ISR, and Cisco 4351 ISR)

LED	Represents	Color	Description	Location	Available On
FLASH	System Flash Status	Blinking Green	Compact flash/eUSB flash is present and is currently being accessed. **Note** Do not remove the flash device while the system is powered on.	Bezel side	All models
PSU	Power Supply Unit (P0 and P1) Status	Green	PSU is on and provides power.	Bezel side	All models[3]
		Amber	PSU is on but with errors or in a failure condition.		
		Off	Power supply is turned off.		
POE PSU (not supported in Cisco IOS XE 3.8)	Power Over Ethernet Power Supply Unit 0and 1 Status	Green	PSU is on and provides power.	Bezel side	All models1[3]
		Amber	PSU is on but with errors or in a failure condition.		
		Off	PSU is off.		
POE Boost (not supported in Cisco IOS XE 3.8)	Power Over Ethernet Boost Mode	Green	Two PoE power supplies are installed and operating in boost mode.	Bezel side	Cisco 4451-X ISR, Cisco ISR4431
		Off	This can mean one of the following: • No PoE PSU is installed. • One PoE PSU is installed. • Two PoE PSUs are installed and operate in redundant mode.		
GE POE	Internal PoE Daughter Card Status	Green	PSU is installed and provides power	Bezel side	All models
		Amber	PSU is installed but in a failure condition.		
		Off	PSU is off.		
PWR	System Power	Green	System power is on and system functions correctly.	Bezel side	All models
		Green blinking	System power is in the process of shutting down.		
		Amber	System power is up, but low level initialization has failed.		
		Amber blinking:	System power is up, but the system has failed to come out of reset.		
		Off	System power is off.		
AC OK	AC power status	Green	AC power is on.	On each power supply unit	All models
		Off	AC power is off.		

1. Cisco 4351ISR does not have SPF 3.
2. Cisco 4461 ISR does not have ISC.
3. Cisco 4351 ISR does not support POE PSU 1.

Table 1-2 LED Descriptions (Applies to the Cisco 4331 ISR and the Cisco 4321 ISR Routers)

LED	Represents	Color	Description	Location	Available On
STAT	System Status	Solid green	System operates normally.	Bezel side	All models
		Blinking amber	BIOS/Rommon is booting.		
		Amber	BIOS/Rommon has completed booting, and system is at Rommon prompt or booting platform software.		
		Off	System is not out of reset or BIOS image is not loadable.		
TEMP	Temperature Status	Solid green	All temperature sensors in the system are within acceptable range.	Bezel side	All models
		Amber	One or more temperature sensors in the system are outside the acceptable range.		
		Off	Temperature is not being monitored.		
FAN	Fan Status	Green	All fans are operating.	Bezel side	All models
		Amber	One fan has stopped working.		
		Blinking Amber	Two or more fans have stopped working, or the fan tray is removed.		
		Off	Fans are not being monitored.		
L	Ethernet ports 0 and 1[1]	Green	Ethernet cable is present and link is established with other side.	I/O side	All models
		Off	No link.		
S	Speed of Ethernet ports 0 and 1	Green Blinking	Blink frequency indicates port speed: • 1 blink - 10-Mbps link speed • 2 blinks - 100-Mbps link speed • 3 blinks - 1000-Mbps link speed	I/O side	All models
		Off	No link or a non-Ethernet 802.3af/t capable device is plugged in and powered over the PoE.		
SFP EN	Port 0, and 1 (for Cisco 4331 ISR), and Port 0 for Cisco 4321 ISR) Enable	Green	SFP module is detected and recognized.	I/O side	All models
		Amber	Initialized with error.		
		Off	Not present.		
SFP S	Status of port 0, and 1 (for Cisco 4331 ISR), and Port 0 for Cisco 4321 ISR)	Green	SFP module is detected and recognized.	I/O side	All models
		Amber	Initialized with error.		
		Off	Not present.		
		Off	Not present.		
SER CON (right)	Serial Console Active	Green	Active console port is RJ-45. **Note** When this LED is on, the USB CON LED will be off.	I/O side[2]	All models

LED	Represents	Color	Description	Location	Available On
USB CON (left)	USB Console Active	Green	Active console port is USB. **Note** When this LED is on, the SER CON LED will be off.	I/O side[2]	All models
SSD	mSATA Slot Status	Green	SSD mSATA is present and enabled.	Bezel side	All models.
		Amber	Initialized with error.		
		Off	Not present.		
POE0	POE PSU	Green	PoE is on and provides power.	Bezel side	All models.
		Amber	PoE is in a failed condition.		
		Off	PoE supply is not present.		
ISC	ISC Slot Status	Green	PVDM4 is present and enabled.	Bezel side	All models
		Amber	Initialized with error.		
		Off	Not present.		
FLASH	System Flash Status	Blinking Green	Compact flash/eUSB flash is present and currently being accessed. **Note** Do not remove the flash device while the system is powered on.	Bezel side	All models
PWR	System Power	Green	System power is on and system functions correctly.	Bezel side	All models
		Green blinking	System power is in the process of shutting down.		
		Amber	System power is up, but low level initialization has failed.		
		Amber blinking:	System power is up, but the system has failed to come out of reset.		
		Off	System power is off.		

1. Management Ethernet Link on bezel side on Cisco 4331 ISR.
2. These LEDs are on the bezel side for Cisco 4331 ISR

Table 1-3 LED Descriptions (Applies to the Cisco 4221 ISR Router)

LED	Represents	Color	Description	Location	Available On
STAT	System Status	Solid green	System operates normally.	Bezel side	All models
		Blinking amber	BIOS/Rommon is booting.		
		Amber	BIOS/Rommon has completed booting, and system is at Rommon prompt or booting platform software.		
		Off	System is not out of reset or BIOS image is not loadable.		

LED	Represents	Color	Description	Location	Available On
TEMP	Temperature Status	Solid green	All temperature sensors in the system are within acceptable range.	Bezel side	All models
		Amber	One or more temperature sensors in the system are outside the acceptable range.		
		Off	Temperature is not being monitored.		
FAN	Fan Status	Green	All fans are operating.	Bezel side	All models
		Amber	One fan has stopped working.		
		Blinking Amber	Two or more fans have stopped working, or the fan tray is removed.		
		Off	Fans are not being monitored.		
L	Ethernet ports 0 and 1[1]	Green	Ethernet cable is present and link is established with other side.	I/O side	All models
		Off	No link.		
S	Speed of Ethernet ports 0 and 1	Green Blinking	Blink frequency indicates port speed: • 1 blink - 10-Mbps link speed • 2 blinks - 100-Mbps link speed • 3 blinks - 1000-Mbps link speed	I/O side	All models
		Off	No link or a non-Ethernet 802.3af/t capable device is plugged in and powered over the PoE.		
SER CON (right)	Serial Console Active	Green	Active console port is RJ-45. **Note** When this LED is on, the USB CON LED is off.	I/O side[2]	All models
USB CON (left)	USB Console Active	Green	Active console port is USB. **Note** When this LED is on, the SER CON LED is off.	I/O side[2]	All models
		Off	PoE supply is not present.		
ISC	ISC Slot Status	Green	PVDM4 is present and enabled.	Bezel side	All models
		Amber	Initialized with error.		
		Off	Not present.		
FLASH	System Flash Status	Blinking Green	Compact flash/eUSB flash is present and currently being accessed. **Note** Do not remove the flash device while the system is powered on.	Bezel side	All models

LED	Represents	Color	Description	Location	Available On
PWR	System Power	Green	System power is on and system functions correctly.	Bezel side	All models
		Green blinking	System power is in the process of shutting down.		
		Amber	System power is up, but low level initialization bas failed.		
		Amber blinking:	System power is up, but the system has failed to come out of reset.		
		Off	System power is off.		

1. Management Ethernet Link on bezel side on Cisco 4221 ISR.
2. These LEDs are on the bezel side for Cisco 4221 ISR

Removable and Interchangeable Modules and Cards

Service Modules (SM-Xs), Network Interface Modules (NIMs), and E-Series Server Modules, fit into external slots and can be removed or replaced without opening the chassis.

External Slots

- Network Interface Modules and Service Modules, page 1-38
- Cisco UCS E-Series Server Modules, page 1-39
- Memory, page 1-40

Internal Slots

- Memory, page 1-40
- Memory, page 1-40
- System Flash, page 1-39

See the *Overview of Cisco Network Modules and Service Modules for Cisco Access Routers* document for general information and single- and double-wide slot numbering.

See the "Install and Remove NIMs and SM-Xs on Cisco 4000 Series ISRs" section on page 5-30 for instructions that describe how to install SM-Xs and NIMs in the router.

See the *Overview of Cisco Interface Cards for Cisco Access Routers* for general interface card information.

See the *Installing Cisco Interface Cards in Cisco Access Routers* document, for instructions that describe how to install legacy interface cards in the router.

Note See the router product page at cisco.com for a list of supported network modules and interface cards.

Network Interface Modules and Service Modules

To install NIMs and SM-Xs on the router chassis, see the "Install and Remove NIMs and SM-Xs on Cisco 4000 Series ISRs" section on page 5-30.

Cisco UCS E-Series Server Modules

Cisco UCS E-Series Servers (E-Series Servers) are the next generation of Cisco UCS Express servers. E-Series Servers are a family of size-, weight-, and power-efficient blade servers that are housed within the Generation 2 Cisco Integrated Services Routers (ISR G2) and Cisco 4000 Series Integrated Services Router. For more information on the E-Series Server Modules, see the Cisco UCS E-Series Servers Configuration Guides.

System Flash

Depending on the model that you have purchased, the routers use a CompactFlash or an eUSB flash for the internal bootflash memory. The CompactFlash and eUSB flash stores the operating system software image.

The CompactFlash is applicable to only Cisco 4451-X ISR. Each model supports 1 internal CompactFlash 8-GB, 16-GB, or 32-GB memory card. The CompactFlash is located behind the fan tray on the router chassis.

Cisco 4431 ISRs have a eMMC flash device. The device supports 8GB, 16GB, or 32 GB.

Cisco 4300 Series ISRs have an onboard flash device or an eMMC flash device. It supports 8GB or 16GB.

Note For Cisco 4451-X ISR, you must use Cisco-qualified CompactFlash cards. The use of any other cards during normal network operation can affect system performance or reliability.

Note Do not run the router without a CompactFlash card installed. Cisco IOS XE software does not boot without a flash card in the router.

Note Depending on the model that you have purchased, the routers use a CompactFlash, or an eUSB flash for the internal bootflash memory. Cisco 4431 ISRs have a eMMC flash device. The device supports 8GB, 16GB, or 32 GB. The latest model of Cisco 4451x ISRs support both eUSB and CompactFlash. If a CompactFlash is installed, it will disable the eUSB. However, you can use the old CompactFlash that is available with the routers.

Solid State Drives

The NIM slots in the router support a field-replaceable solid state drive module with a dual-SSD SATA slot. The NIM can be installed in any bay slot 0. The SSDs are hot-swappable as part of normal operation. See the “Locate Internal and External Slots for Modules on Cisco 4331 ISR” section on page 6-9 section for more information.

Cisco 4300 ISR platforms support an optional internal SSD mSATA. This device is not hot-swappable and requires opening the chassis to service or upgrade.

Cisco 4461 ISR platform supports an optional internal M2.SSD with the capacity of 800 G. See the “Locate Internal and External Slots for Modules on Cisco 44611 ISR” section on page 6-9 section for more information.

Packet Voice Digital Signal Processor Modules

The Packet Voice Digital Signal Processor Modules (PVDM4s) add additional voice capabilities to the routers. The PVDM4 is installed inside the chassis of the router. See the "Install PVDM4 on the Motherboard of Cisco 4400 Series ISRs" section on page 6-33 for installation instructions.

Memory

The routers contain the following types of memory:

- DIMMs—Stores the running configuration and routing tables and is used for packet buffering by the network interfaces. Cisco IOS XE software executes from memory. Supported module types are Dual In-Line Memory Modules (DIMMs).

Note The DIMMs are interchangeable although the same sizes are not supported in all locations. The Cisco 4300 ISRs use a different type of DIMM compared to the 4400 ISRs. For proper operation, the DIMMs for the Cisoc 4400 ISR should not be installed in an Cisco 4300 ISR, and vice a versa. The single forwarding plane DIMM must have a 2-GB DIMM that is exactly like one of the two DIMMs used for the control plane with 4 GB of default memory. The control plane uses two DIMMs and they must be exactly the same type and density. This applies to only Cisco 4400 Series ISRs. Cisco 4300 Series ISRs do not have a distinct forwarding plane DIMM.

- Boot/NVRAM—Stores the bootstrap program (ROM monitor) and the configuration register. The boot/NVRAM is not serviceable.
- Flash memory—Internal bootflash memory. For details, see the"System Flash" section on page 1-39.
- CompactFlash memory card (Cisco 4451-X ISR routers)—Available in 8 GB, 16 GB, or 32 GB.
- eUSB flash card (Cisco 4300 ISR router)—Available in 8 GB or 16 GB.

Power Supply

The routers support a variety of power supply configurations. The power supplies module are field-replaceable and externally accessible. Cisco 4331 ISR power supply module is inside the chassis.

Table 1-4 summarizes the power options.

Table 1-4 Field Replaceable Unit Power Options

Router Model	AC Input PSU	DC Input PSU	Dual, Hot Swap Power Supply	PoE Power Supply Converter
Cisco 4461 ISR	Y	Y	Y	Y
Cisco 4451-X ISR	Y	Y	Y	Y
Cisco 4431 ISR	Y	Y	Y	—
Cisco 4351 ISR	Y	—	—	Y
Cisco 4331 ISR	Y	Y	—	—

Table 1-4 Field Replaceable Unit Power Options (continued)

Router Model	AC Input PSU	DC Input PSU	Dual, Hot Swap Power Supply	PoE Power Supply Converter
Cisco 4321 ISR	Y	—	—	—
Cisco 4221 ISR	Y	Y	—	—

Fans, Ventilation, and Airflow

Chassis Ventilation

Router and chassis temperature is regulated with internal fans. An onboard temperature sensor controls the fan speed. The fans are always on when the router is powered on. Under most conditions, the fans operate at the slowest speed to conserve power and reduce noise. When necessary, the fans operate at higher speeds under conditions of higher ambient temperature. To replace Cisco 4451-X ISR, Cisco 4431 ISR, and Cisco ISR4351 fan trays, see the "Replace a Fan Tray" section on page 5-60.

Figure 1-35 and Figure 1-36 show Cisco 4461airflow, Figure 1-37 shows Cisco 4451-X ISR airflow, Figure 1-38 showsCisco 4431 ISR airflow, Figure 1-39 shows Cisco 4321 ISR airflow, and Figure 1-40 shows Cisco 4221 ISR airflow.

Figure 1-35 Cisco 4461 ISR Airflow

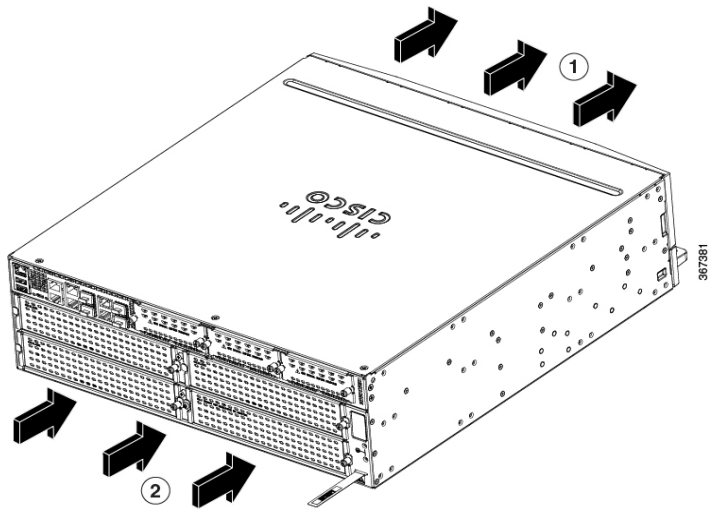

1	Exhaust	2	Intake

Figure 1-36 Cisco 4461 ISR Airflow (NEBS View)

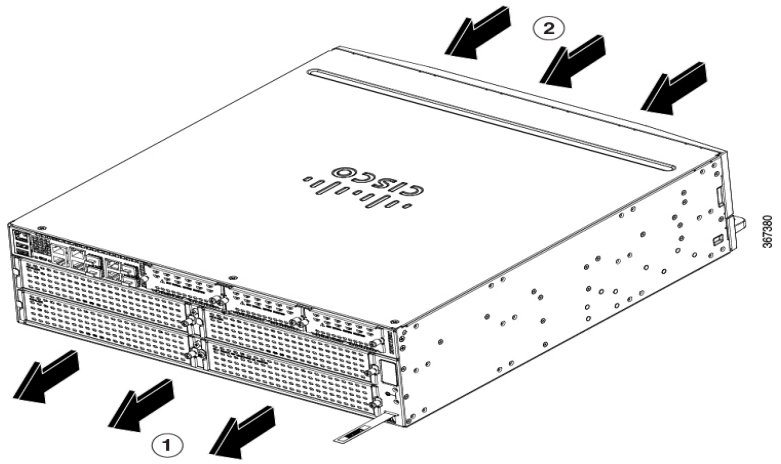

1	Exhaust	**2**	Intake

Figure 1-37 Cisco 4451-X ISR Airflow

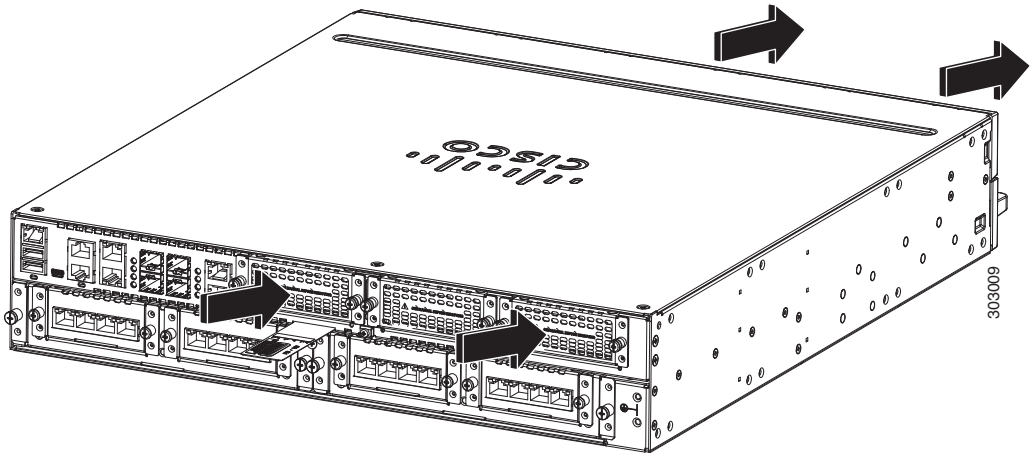

Figure 1-38 Cisco 4431 ISR Airflow

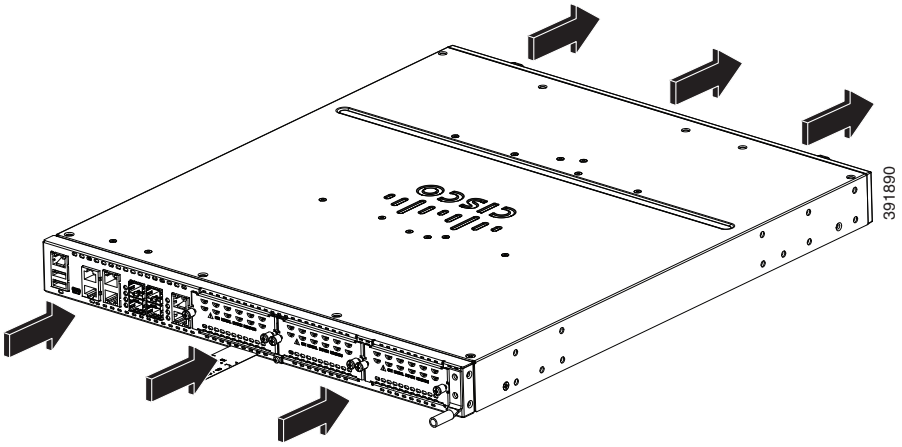

Figure 1-39 Cisco 4321 ISR Airflow

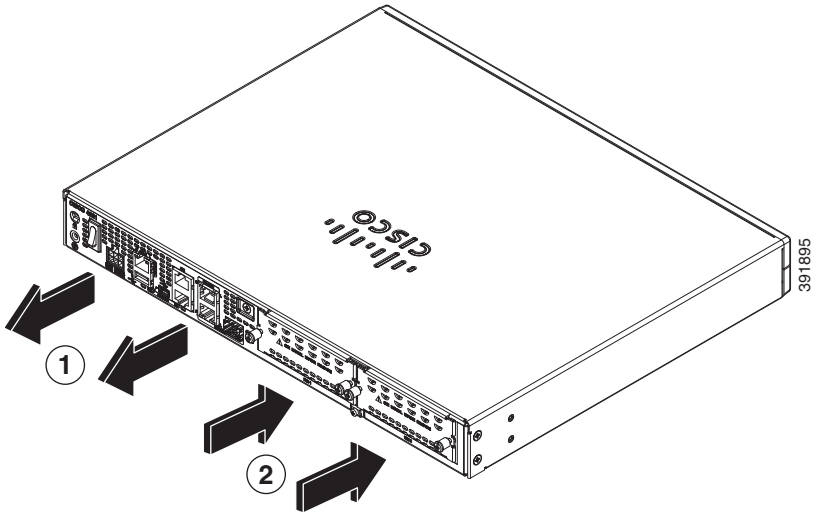

1	Exhaust	**2**	Intake

Figure 1-40 Cisco 4221 ISR Airflow

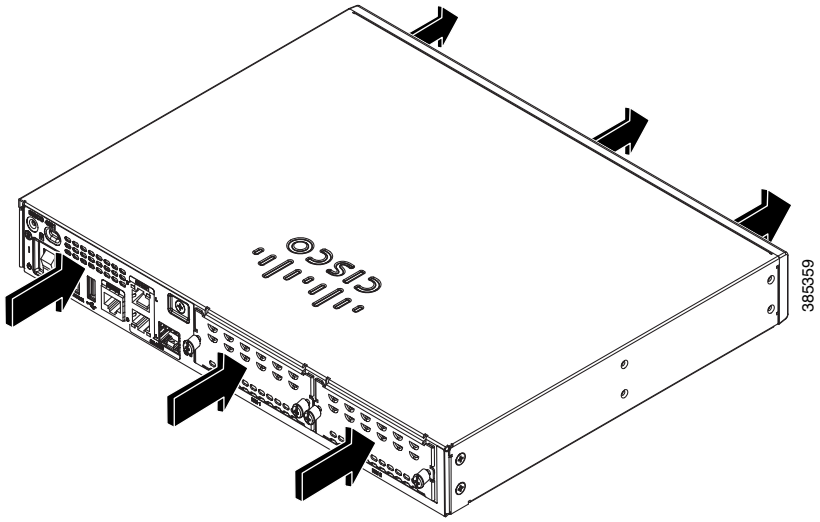

Slots, Subslots (Bay), Ports, and Interfaces in Cisco 4000 Series ISRs

The routers supports two types of interface modules: Enhanced Service Modules (SM-X) and Network Modules (NIMs).

In most cases, the router designates its interfaces using a 3-tuple notation that lists the slot, bay, and port. The 3-tuple value is zero based. An example of a 3-tuple is 0/1/2. This refers to slot 0, the second bay in slot 0 (the first bay is 0 so the second bay is 1), and the third port in bay 1. See Table 1-5 for more examples.

Table 1-5 Slot, Subslot (Bay) and Port Numbering

3-Tuple Example	Slot	Bay	Port
0/1/2	0	2nd	3rd
0/0/1	0	1st	2nd
1/1/1	1	2nd	2nd

- Slots and bays are numbered from the left to the right, and from the top to the bottom.
- The auxiliary (AUX) serial port and console (CON) serial port do not have slot, bay, or port numbers.
- The GE management port is named GE 0 and has a port number. It does not have a slot or bay number.
- The two USB ports are named USB0 and USB1. They do not have slot or bay numbers. Cisco 4331 ISR and Cisco 4321 ISR have only one USB port.

Note USB0 and USB1 can be used to insert flash drives.

Figure 1-41 shows the ports and slots on Cisco 4451-X ISRs.

Figure 1-41 Ports and Slots on the Cisco 4451-X ISRs

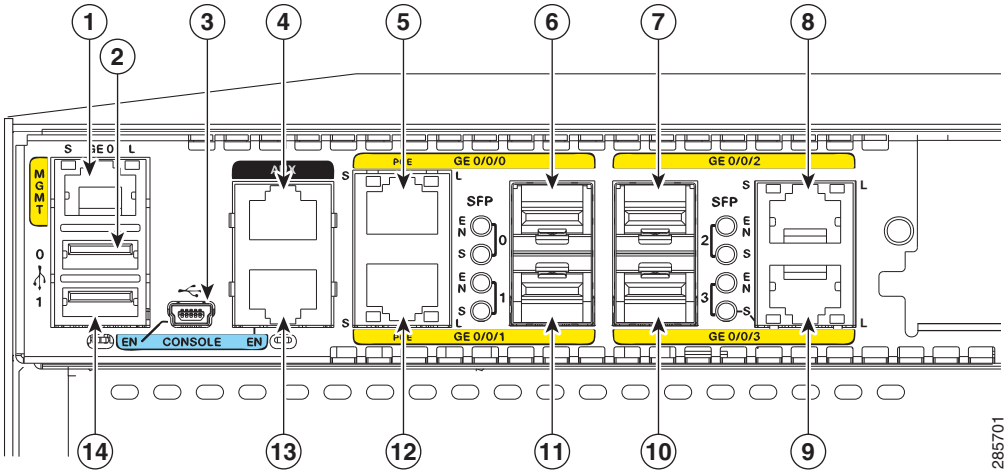

1	Gigabit Ethernet management port	**2**	USB port 0
3	USB Type B mini port	**4**	Auxiliary port
5	RJ-45 Gigabit Ethernet port (GE 0/0/0)	**6**	Small-form-factor pluggable (SFP) 0/Gigabit Ethernet port (GE 0/0/0)
7	SFP 2/Gigabit Ethernet port (GE 0/0/2)	**8**	RJ-45 Gigabit Ethernet port (GE 0/0/2)
9	RJ-45 Gigabit Ethernet port GE 0/0/3	**10**	SFP 3/Gigabit Ethernet GE 0/0/3
11	SFP 1/Gigabit Ethernet GE 0/0/1	**12**	RJ-45 Gigabit Ethernet port GE 0/0/1
13	Console port	**14**	USB port 1

Slot Numbering

Slots are numbered 0, 1, and 2.

About Slot 0

The following are the main features of Slot 0:

- Slot 0 is the motherboard and not removable. It is reserved for integrated ports and NIMs.
- NIMs are designated by the number of the first slot that they occupy. A double-wide NIM occupies two slots, but its designation is only the left-most slot number.
- The front panel GE ports (or native interface ports) always reside in slot 0 and bay 0. The ports are called Gigabitethernet 0/0/0, Gigabitethernet 0/0/1, Gigabitethernet 0/0/2, and Gigabitethernet 0/0/3 (up to as many ports supported on the particular router).
- PVDM4s do not have an external slot number. Therefore, the nomenclature for PVDM4s always has 0 in the first tuple. For example, the 3-tuple for an PVDM4 can be 0/4/x.

Subslot/Bay Numbering

- Integrated devices, also known as integrated ports or FPGEs, and integrated NIMs reside in a fixed section of bay 0.
- Main board NIMs bays start at bay 1, because the integrated devices and integrated NIMs take up bay 0.
- The bay numbers for PVDM4s start with the next bay number after the last NIM bay number.

Gigabit Ethernet Management

Cisco 4000 Series ISRs provides a Gigabit Ethernet Management port, called GE0. This port is the only 1-tuple port on the system. See the Gigabit Ethernet Management Port section in the *Software Configuration Guide for the Cisco ISR 4400 Series and Cisco ISR 4300 Series Routers* for additional information about the Gigabit Ethernet Management port.

Specifications

For information on specifications of the Cisco 4000 Series ISRs, see, *https://www.cisco.com/c/en/us/products/collateral/routers/4000-series-integrated-services-routers-isr/datasheet-c78-732542.html.*

This table describes the regulatory compliance information of the Cisco 4000 Series ISRs,

Table 1-6 Regulatory Compliance Table

Safety compliance	IEC 60950-1, Safety of information technology equipment [world-wide] EN 60950-1:2006, Safety of information technology equipment [EU] UL 60950-1, Second Edition, Standard of safety for information technology equipment [US] CAN/CSA C22.2 No. 60950-1-07, Safety of information technology equipment including electrical business equipment [Canada] AS/NZS 60950.1: 2011 [Australia] GB 4943[PRC] IEC 60950-1: 2005 plus Am1: 2009, [World-wide] EC 62368-1, Second Edition, Audio/video, information and communication technology equipment-Part 1: Safety requirements [World-Wide] EN 62368-1, Second Edition, Audio/video, information and communication technology equipment-Part 1: Safety requirements [EU] CAN/CSA C22.2 No. 62368-1, Audio/video, information and communication technology equipment-Part 1: Safety requirements [Canada] UL 62368-1, Audio/video, information and communication technology equipment-Part 1: Safety requirements [US] For detailed compliance information, see the *Regulatory Compliance and Safety Information for the Cisco 4000 Series Routers* document.

Table 1-6 Regulatory Compliance Table

Immunity compliance	CISPR24 ITE-Immunity characteristics, Limits and methods of measurement EN 55024 ITE-Immunity characteristics, Limits and methods of measurement EN 50082-1 Electromagnetic compatibility - Generic immunity standard - Part 1 EN 300-386 V1.6.1 Electromagnetic compatibility for TNE EN 61000 For detailed compliance information, see the *Regulatory Compliance and Safety Information for the Cisco ISR 4400 and Cisco ISR 4300 Series Routers* document.
EMC compliance	EN 55022, class A CISPR22, class A CFR47, Part 15, Subpart B, class A AS/NZS CISPR22, Class A VCCI, Class A CNS13438 (Taiwan) KN22:2009 (Korea) ICES-003 Harmonic Current Emission EN 61000 Voltage Fluctuation Flicker EN61000 For detailed compliance information, see the *Regulatory Compliance and Safety Information for the Cisco ISR 4400 and Cisco ISR 4300 Series Routers* document.

Periodic Inspection and Cleaning

To minimize the negative impact of environmental dust or debris, we recommend periodic inspection and cleaning of the external surface of the router. The frequency of inspection and cleaning is dependent upon the severity of the environmental conditions, but we recommend a minimum frequency of every six months. Cleaning involves vacuuming of router air intake and exhaust vents. See the "Fans, Ventilation, and Airflow" section on page 1-41.

Caution Sites with ambient temperatures consistently above 25°C or 77°F and with potentially high levels of dust or debris may require periodic preventative maintenance cleaning.



Cisco 4000 Series ISRs Preinstallation

This chapter provides preinstallation information, such as recommendations and requirements that must be met before installing your router. Before you begin, inspect all items for shipping damage. If anything appears to be damaged or if you encounter problems installing or configuring your router, contact customer service. Warranty, service, and support information is included in the Hardware Quick Start guide that is shipped with your router. See the following sections to prepare for installation:

- Safety Recommendations, page 2-6
- General Site Requirements, page 2-8
- Rack Requirements, page 2-10
- Router Environmental Requirements, page 2-10
- Network Cabling Specifications, page 2-11
- Installation Checklist, page 2-18
- Creating a Site Log, page 2-19

To see translated warnings that appear in this publications, see the *Regulatory Compliance and Safety Information for the Cisco 4000 Series Routers* document

Standard Warning Statements

This section describes the warning definition and then lists core safety warnings grouped by topic.



Warning **This warning symbol means danger. You are in a situation that could cause bodily injury. Before you work on any equipment, be aware of the hazards involved with electrical circuitry and be familiar with standard practices for preventing accidents. Use the statement number provided at the end of each warning to locate its translation in the translated safety warnings that accompanied this device.**

Note: SAVE THESE INSTRUCTIONS
Statement 1071

General Safety Warnings



Warning **High touch/leakage current- Permanently connected protective earth ground is essential before connecting to telecommunication network.** Statement 343



Warning **To reduce the risk of electric shock, secure the modules with provided screws.** Statement 347



Warning **To reduce the risk of electric shock, the chassis of this equipment needs to be connected to permanent earth ground during normal use.** Statement CS-0445**.**



Warning **Read the installation instructions before you connect the system to its power source.** Statement 1004



Warning **Ultimate disposal of this product should be handled according to all national laws and regulations.** Statement 1040



Warning **Installation of the equipment must comply with local and national electrical codes.** Statement 1074



Warning **To comply with the Class A emissions requirements shielded twisted pair T1/E1 cables must be used for SPA-8-Port Channelized T1/E1 SPA (SPA-8XCHT1/E1) on the router.** EN55022/CISPR22 Statement



Warning **To comply with Class A emissions requirements- shielded management Ethernet, CON, and AUX cables on the router must be used.**



Warning **Power cable and AC adapter - When installing the product, please use the provided or designated connection cables/power cables/AC adaptors. Using any other cables or adapters could cause a malfunction or a fire. Electrical Appliance and Material Safety Law prohibits the use of certified cables (that have the 'UL' shown on the code) for any other electrical devices than products designated by Cisco. The use of cables that are certified by Electrical Appliance and Material Safety Law (that have 'PSE' shown on the code) is not limited to Cisco-designated products.** Statement 371



Warning **Only trained and qualified personnel should be allowed to install or replace this equipment** Statement 1030



Warning **This product relies on the building's installation for short-circuit (overcurrent) protection. Ensure that the protective device is rated not greater than: AC power supplies for the Cisco 4000 Series ISRs.** Statement 1005

Warning **This product requires short-circuit (overcurrent) protection to be provided as part of the building installation. Install only in accordance with national and local wiring regulations.** Statement 1045

Warning **This unit may have more than one power supply connection. All connections must be removed to de-energize the unit.** Statement 1028

Warning **This unit is intended for installation in restricted access areas. A restricted access area can be accessed only through the use of a special tool, lock and key, or other means of security.** Statement 1017

Warning **The plug-socket combination must be accessible at all times, because it serves as the main disconnecting device.** Statement 1019

Warning **Hazardous voltage or energy may be present on the DC power terminals. Always replace cover when terminals are not in service. Be sure uninsulated conductors are not accessible when cover is in place.** Statement 1075

Warning **Use copper conductors only.** Statement 1025

Warning **This equipment must be grounded. Never defeat the ground conductor or operate the equipment in the absence of a suitably installed ground conductor. Contact the appropriate electrical inspection authority or an electrician if you are uncertain that suitable grounding is available.** Statement 1024

Warning **Hazardous voltage or energy is present on the backplane when the system is operating. Use caution when servicing.** Statement 1034

Warning **Class 1 LED product.** Statement 1027

Warning 

Class I(CDRH) and Class 1M (IEC) laser products. Statement 1055

Warning **Invisible laser radiation may be emitted from the end of the unterminated fiber cable or connector. Do not view directly with optical instruments. Viewing the laser output with certain optical instruments (for example, eye loupes, magnifiers, and microscopes) within a distance of 100 mm may pose an eye hazard.** Statement 1056

Fiber type and Core diameter (µm)	Wavelength (nm)	Max. Power (mW)	Beam divergence (rad)
SM 11	1200 - 1400	39 - 50	0.1 - 0.11
MM 62.5	1200 - 1400	150	0.18 NA
MM 50	1200 - 1400	135	0.17 NA
SM 11	1400 - 1600	112 - 145	0.11 - 0.13

349377

Warning **There is the danger of explosion if the battery is replaced incorrectly. Replace the battery only with the same or equivalent type recommended by the manufacturer. Dispose of used batteries according to the manufacturer's instructions.** Statement 1015

Warning **Do not touch or bridge the metal contacts on the battery. Unintentional discharge of the batteries can cause serious burns.** Statement 341

Warning **To prevent personal injury or damage to the chassis, never attempt to lift or tilt the chassis using the handles on modules (such as power supplies, fans, or cards); these types of handles are not designed to support the weight of the unit.** Statement 1032

Warning **To prevent the system from overheating, do not operate it in an area that exceeds the maximum recommended ambient temperature of: 40 degrees C.** Statement 1047

Warning **This equipment must be externally grounded using a customer-supplied ground wire before power is applied. Contact the appropriate electrical inspection authority or an electrician if you are uncertain that suitable grounding is available.** Statement 366

Warning **Blank faceplates and cover panels serve three important functions: they prevent exposure to hazardous voltages and currents inside the chassis; they contain electromagnetic interference (EMI) that might disrupt other equipment; and they direct the flow of cooling air through the chassis. Do not operate the system unless all cards, faceplates, front covers, and rear covers are in place.** Statement 1029

Warning **Only trained and qualified personnel should be allowed to install, replace, or service this equipment.** Statement 1030



Warning **This equipment must be installed and maintained by service personnel as defined by AS/NZS 3260. Incorrectly connecting this equipment to a general-purpose outlet could be hazardous. The telecommunications lines must be disconnected 1) before unplugging the main power connector or 2) while the housing is open, or both.** Statement 1043



Warning **This unit might have more than one power supply connection. All connections must be removed to de-energize the unit.** Statement 1028



Warning **Hazardous network voltages are present in WAN ports regardless of whether power to the unit is OFF or ON. To avoid electric shock, use caution when working near WAN ports. When detaching cables, detach the end away from the unit first.** Statement 1026



Warning **Before opening the unit, disconnect the telephone-network cables to avoid contact with telephone-network voltages.** Statement 1041



Warning **Do not use this product near water; for example, near a bath tub, wash bowl, kitchen sink or laundry tub, in a wet basement, or near a swimming pool.** Statement 1035



Warning **Never install telephone jacks in wet locations unless the jack is specifically designed for wet locations.** Statement 1036



Warning **No user-serviceable parts inside. Do not open.** Statement 1073



Warning **Never touch uninsulated telephone wires or terminals unless the telephone line has been disconnected at the network interface.** Statement 1037



Warning **Avoid using a telephone (other than a cordless type) during an electrical storm. There may be a remote risk of electric shock from lightning.** Statement 1038



Warning **To report a gas leak, do not use a telephone in the vicinity of the leak.** Statement 1039



Warning **Instructed person is someone who has been instructed and trained by a skilled person and takes the necessary precautions when working with equipment. Skilled person/Qualified personnel is someone who has training or experience in the equipment technology and understand potential hazards when working with equipment.** Statement 1089

Warning **Only skilled person should be allowed to install, replace, or service this equipment. Refer to statement 1089 for description of skilled person.** Statement 1090

Warning **Only instructed person or skilled person should be allowed to install, replace, or service this equipment. Refer to statement 1089 for description of skilled person.** Statement 1091

Warning **This equipment must be grounded.To reduce the risk of electric shock, the power cord, plug or combination must be connected to a properly grounded electrode, outlet or terminal.** Statement 1252—Equipment Grounding

Warning **Pluggable optical modules comply with IEC 60825-1 Ed. 3 and 21 CFR 1040.10 and 1040.11 with or without exception for conformance with IEC 60825-1 Ed. 3 as described in Laser Notice No. 56, dated May 8, 2019.** Statement 1255

Safety Recommendations

Before installing, configuring, or maintaining the router, review the safety warnings listed in *Regulatory Compliance and Safety Information for the Cisco 4000 Series ISRs guide* that comes with your router.

Follow these guidelines to ensure general safety:

- Never attempt to lift an object that might be too heavy for you to lift by yourself.
- Keep the chassis area clear and dust-free during and after installation.
- If you remove the chassis cover, place it in a safe place.
- Keep tools and chassis components away from walk areas.
- Do not wear loose clothing that may get caught in the chassis. Fasten any tie or scarf and roll up sleeves.
- Wear safety glasses when working under conditions that might be hazardous to your eyes.
- Do not perform any action that may create a hazard to people or makes equipment unsafe.

Safety with Electricity

Warning **This unit might have more than one power supply connection. All connections must be removed to de-energize the unit.** Statement 1028

Warning **High touch/leakage current- Permanently connected protective earth ground is essential before connecting to system power supply.** Statement 342

Warning **Do not work on the system or connect or disconnect cables during periods of lightning activity.** Statement 1001

Warning **Read the installation instructions before connecting the system to the power source.** Statement 1004

Warning **The covers are an integral part of the safety design of the product. Do not operate the unit without the covers installed.** Statement 1077

Follow these guidelines when working on equipment powered by electricity:

- Locate the emergency power-off switch in the room in which you are working. If an electrical accident occurs, you can quickly turn off the power.
- Disconnect all power before doing the following:
  - Installing or removing a chassis
  - Working near power supplies
- Look carefully for possible hazards in your work area, such as moist floors, ungrounded power extension cables, frayed power cords, and missing safety grounds.
- Do not work alone if hazardous conditions exist.
- Never assume that power is disconnected from a circuit. Always check.
- Never open the enclosure of the internal power supply.
- If an electrical accident occurs to another person, proceed as follows:
  - Use caution; do not become a victim yourself.
  - Turn off power to the device.
  - If possible, send another person to get medical aid. Otherwise, assess the condition of the victim and then call for help.
  - Determine if the person needs rescue breathing or external cardiac compressions; then take appropriate action.

In addition, use the following guidelines when working with any equipment that is disconnected from a power source but has telephone wiring or other network cabling connections:

- Never install telephone wiring during a lightning storm.
- Never install telephone jacks in wet locations unless the jack is specifically designed for it.
- Never touch uninsulated telephone wires or terminals unless the telephone line is disconnected at the network interface.
- Use caution when installing or modifying telephone lines.
- Remove power cables from all installed power supplies before opening the chassis.

Prevent Electrostatic Discharge Damage

Electrostatic discharge (ESD) can damage equipment and impair electrical circuitry. It can occur if electronic printed circuit cards are improperly handled and can cause complete or intermittent failures. Always follow these ESD prevention procedures when removing and replacing modules:

- Ensure that the router chassis is electrically connected to the ground.
- Wear an ESD-preventive wrist strap, ensuring that it makes good skin contact. Connect the clip to an unpainted surface of the chassis frame to channel unwanted ESD voltages safely to ground. To guard against ESD damage and shocks, the wrist strap and cord must operate effectively.
- If no wrist strap is available, ground yourself by touching a metal part of the chassis.

Caution For the safety of your equipment, periodically check the resistance value of the anti-static strap. It should be between 1 and 10 megohms (Mohm).

General Site Requirements

This section describes the requirements your site must meet for the safe installation and operation of your router. Ensure that the site is properly prepared before beginning installation. If you are experiencing shutdowns or unusually high errors with your existing equipment, the guidelines provided in this section can also help you isolate the cause of failures and prevent future problems.

General Precautions

Observe the following general precautions when using and working with your Cisco 4000 Series ISRs.

- Keep your system components away from radiators and heat sources, and do not block cooling vents.
- Do not spill food or liquids on your system components, and never operate the product in a wet environment.
- Do not push any objects into the openings of your system components. Doing that can cause fire or electric shock by shorting out interior components.
- Position system cables and power supply cables carefully. Route system cables and the power supply cable and plug so that they cannot be stepped on or tripped over. Be sure that nothing else rests on your system component cables or power cable.
- Do not modify power cables or plugs. Consult a licensed electrician or your power company for electrical modifications at your site. Always follow your local and national wiring rules.
- If you turn off your system, wait at least 30 seconds before turning it on again to avoid system component damage.

Site Selection Guidelines

Cisco 4000 Series ISRs require specific environmental operating conditions. Temperature, humidity, altitude, and vibration can affect the performance and reliability of the router. The following sections provide specific information to help you plan for the proper operating environment.

Cisco 4000 Series ISRs are designed to meet the industry EMC, safety, and environmental standards described in the *Regulatory Compliance and Safety Information for the Cisco 4000 Series ISRs* document.

Site Environmental Requirements

Environmental monitoring in the router protects the system and components from damage caused by excessive voltage and temperature conditions. To ensure normal operation and avoid unnecessary maintenance, plan and prepare your site configuration *before* installation. After installation, make sure the site maintains the environmental characteristics as shown in Table 2-1.

Table 2-1 Router Environmental Tolerances

Environmental Characteristic	Minimum	Maximum
Steady State Operating	0 degree C	40 degree C (40 degrees C at 10,000 feet) **Note** Cisco 4461 ISR can support 55C-6kft for a limited list of SM and NIM deployments.
Storage	–20 degrees C	+70 degrees C
Humidity operating (noncondensing)	10%	90%
Humidity nonoperating (noncondensing)	5%	95%
Altitude operating: over allowable temperature range (0 to 50 degrees C)	–500 feet	10,000 feet
Altitude, nonoperating: over allowable temperature range	–1000 feet	50,000 feet
Thermal shock non-operating with change over time of 3 minute	–25 degrees C	+70 degrees C
Thermal Shock - Operating at 2.5 degree C per minute	0 degrees C	+50 degrees C

Physical Characteristics

Be familiar with the physical characteristics of the Cisco 4000 Series ISRs to assist you in placing the system in the proper location.For more information on the physical characteristics of Cisco 4000 Series Integrated Services Routers (ISRs), refer to the Cisco 4000 Series Integrated Services Routers datasheet.

The following list describes additional Cisco 4000 Series ISRs chassis characteristics:

- Cable-management brackets at each Cisco 4000 Series ISRs locations can hold 16 ports of STP/UTP RJ 45 cables
- Cable-management brackets allow a bend radius of 1.5 inches for cables
- Rack-mount brackets that have optional mounting location. It allow you to mount on a front to rear rail variance distance of 15.50/394mm to 19.00/482.6mm

Rack Requirements

Some Cisco routers include brackets for use with a 19-inch rack or, if specified in your order, optional larger brackets for use with a 23-inch rack.

The following information can help you plan your equipment rack configuration:

- Allow clearance around the rack for maintenance.
- Allow at least one rack unit of vertical space between routers.
- Enclosed racks must have adequate ventilation. Ensure that the rack is not congested, because each router generates heat. An enclosed rack should have louvered sides and a fan to provide cooling air. Heat generated by equipment at the bottom of the rack can be drawn upward into the intake ports of the equipment above it.
- When mounting a chassis in an open rack, ensure that the rack frame does not block the intake or exhaust ports. If the chassis is installed on slides, check the position of the chassis when it is seated in the rack.

Router Environmental Requirements

Cisco 4000 Series ISRss can be placed on a desktop or installed in a rack. The location of your router and the layout of your equipment rack or wiring room are extremely important considerations for proper operation. Equipment placed too close together, inadequate ventilation, and inaccessible panels can cause malfunctions and shutdowns, and can make maintenance difficult. Plan for access to both front and rear panels of the router.

When planning your site layout and equipment locations, refer to the "General Site Requirements" section on page 2-8. If you are currently experiencing shutdowns or an unusually high number of errors with your existing equipment, these precautions and recommendations may help you to isolate the cause of failure and prevent future problems.

- Ensure that the room where your router operates has adequate air circulation. Electrical equipment generates heat. Without adequate air circulation, ambient air temperature may not cool equipment to acceptable operating temperatures.
- Always follow the ESD-prevention procedures described in the "Prevent Electrostatic Discharge Damage" section on page 2-8 to avoid damage to equipment. Damage from static discharge can cause immediate or intermittent equipment failure.

- Ensure that the chassis cover and module rear panels are secure. All empty network module slots, interface card slots, and power supply bays must have filler panels installed. The chassis is designed to allow cooling air to flow within it, through specially designed cooling slots. A chassis with uncovered openings permits air leaks, which may interrupt and reduce the flow of air across internal components.
- Baffles can help to isolate exhaust air from intake air. Baffles also help to draw cooling air through the chassis. The best placement of the baffles depends on the airflow patterns in the rack. You can find the best placement by experimenting with different configurations.
- When equipment installed in a rack (particularly in an enclosed rack) fails, try operating the equipment individually. Power off other equipment in the rack (and in adjacent racks) to allow the router under test maximum cooling air and clean power.

Power Guidelines and Requirements

Check the power at your site to ensure that you are receiving "clean" power (free of spikes and noise). Install a power conditioner if necessary.

The AC power supply includes the following features:

- Autoselects either 110 V or 220 V operation.
- All units include a 6-foot (1.8-meter) electrical power cord. (A label near the power inlet indicates the correct voltage, frequency [only AC-powered systems], current draw, and power dissipation for the unit.)

Table 2-2 lists power requirements for the Cisco 4000 Series ISRs.

Table 2-2 Power Requirements for Cisco 4000 Series ISRs

Router	Power Source	Input Power	Input Voltage Tolerance Limits
Cisco 4461 ISR	AC	100 — 240 VAC, 8.2 A, 50 — 60 Hz	90 — 264 VAC
Cisco 4461 with PoE	AC	100 — 240 VAC, 11.0 A, 50 — 60 Hz	90 — 264 VAC
Cisco 4451 ISR	AC	100 — 240 VAC, 5.3 A, 50 — 60 Hz	90 — 264 VAC
Cisco 4451 with PoE	AC	100 — 240 VAC, 11.0 A, 50 — 60 Hz	90 — 264 VAC
Cisco 4431 ISR	AC	100 — 240 VAC, 5.3 A, 50 — 60 Hz	90 — 264 VAC
Cisco 4351 ISR	AC	100 — 240 VAC, 11.0 A, 50 — 60 Hz	90 — 264 VAC
Cisco 4331 ISR	AC	100 — 240 VAC, 50 — 60 Hz	90 — 264 VAC
Cisco 4321ISR	AC	100 — 240 VAC, 50 — 60 Hz	90 — 264 VAC
Cisco 4221 ISR	AC	100 — 240 VAC, 50 — 60 Hz	90 — 264 VAC

Network Cabling Specifications

The following sections describe the cables required to install your Cisco 4000 Series ISRs:

- Console and Auxiliary Port Considerations, page 2-12
- Prepare for Network Connections, page 2-16

Console and Auxiliary Port Considerations

The router includes an asynchronous serial console port and an auxiliary port. You access to the router either locally using a console terminal connected to the console port, or remotely using a modem connected to the auxiliary port. This section discusses important cabling information you must consider before connecting the router to a console terminal or modem.

The major difference between the console and auxiliary ports is that the auxiliary port supports hardware flow control and the console port does not. Flow control paces the transmission of data between a sending and a receiving device. Flow control ensures that the receiving device can absorb the data sent to it before the sending device sends more data. When the buffers on the receiving device are full, a message is sent to the sending device to suspend transmission until the data in the buffers is processed. Because the auxiliary port supports flow control, it is suited for use with the high-speed transmissions of a modem. Console terminals send data at speeds slower than the speeds modems do; therefore, the console port is ideally suited for use with console terminals.

Note Cisco 4221 ISR does not have an auxiliary port.

Console Port Connections

The router has both EIA/TIA-232 asynchronous (RJ-45) and USB 5-pin mini Type B, 2.0 compliant serial console ports. Shielded USB cables with properly terminated shields are recommended.

EIA/TIA-232

Depending on the cable and the adapter used, this port appears as a DTE or DCE device at the end of the cable. At a time, only one port can be used.

The default parameters for the console port are 9600 baud, 8 data bits, 1 stop bit, and no parity. The console port does not support hardware flow control. For detailed information about installing a console terminal, see the "Connect to Console Terminal or Modem" section on page 3-23.

For cable and port pinouts, see the *Cisco Modular Access Router Cable Specifications* document.

T1/E1 Port Pinouts

Figure 2-1 shows the RJ-48C connector used by the T1/E1 ports on the TDM interface module.

Figure 2-1 RJ-48C Connector

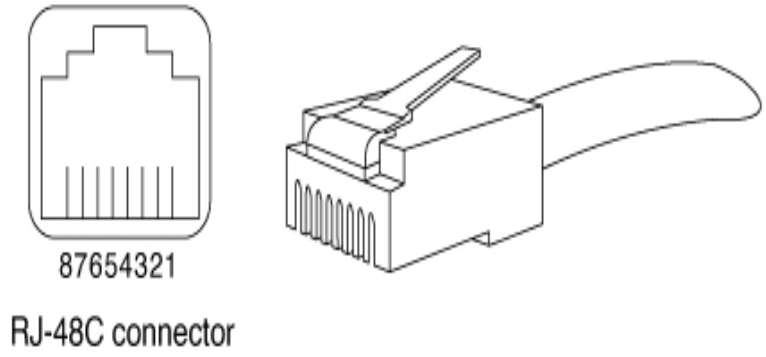

Figure 2-2 shows the RJ-48C connector wiring for the T1/E1 cable.

Figure 2-2 RJ-48-to-RJ-48 T1/E1 Cable Wiring

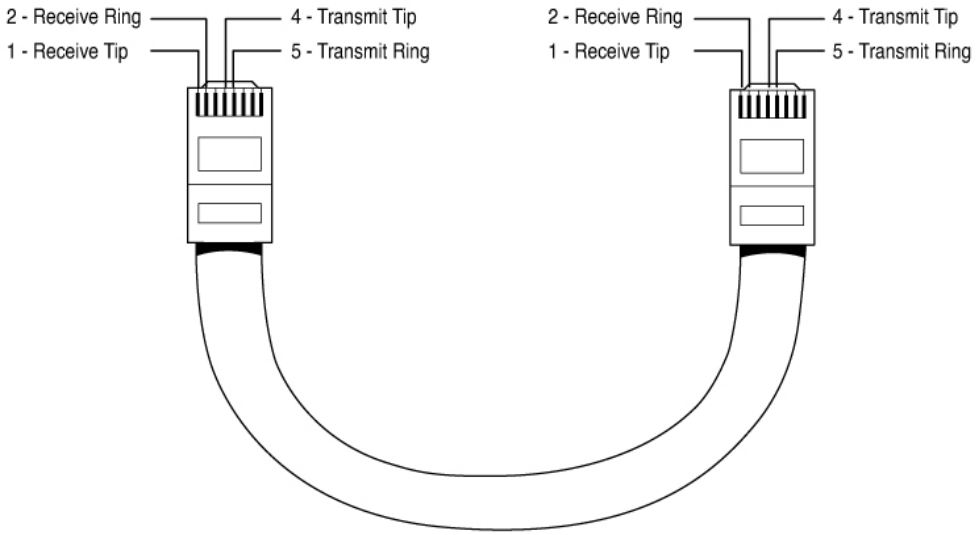

Note It is recommended to use a shielded cable for RJ-48C connectors.

Table 2-3 shows the T1/E1 RJ-48C pinout configuration for RJ-45 connectors on the TDM interface module.

Table 2-3 T1/E1 Port Pinout

Pin	Signal Name	Direction	Description
1	RX Tip	Input	Receive Tip
2	RX Ring	Input	Receive Ring

Pin	Signal Name	Direction	Description
3			Not used
4	TX Tip	Output	Transmit Tip
5	TX Ring	Output	Transmit Ring
6			Not used
7			Not used
8			Not used

USB Serial Console

The USB serial console port connects directly to the USB connector of a PC using a USB Type A to 5-pin mini USB Type-B cable. The USB Console supports full speed (12Mb/s) operation. The console port does not support hardware flow control.

Note Cisco 4461 supports Mini-USB Type B serial port and Micro-USB Type B serial port

Note Always use shielded USB cables with a properly terminated shield.

The default parameters for the console port are 9600 baud, 8 data bits, no parity, and 1 stop bit. For detailed information about installing a console terminal, see the "Connect to Console Terminal or Modem" section on page 3-23.

For operation with a Microsoft Windows OS version older than Windows 7, the Cisco Windows USB console driver must be installed on a PC connected to the console port. If the driver is not installed, appropriate prompts guide you through a simple installation process. For detailed information about installing the Cisco Windows USB Console Driver, see "Install Cisco Microsoft Windows USB Device Driver" section on page 3-25.

The Cisco Windows USB Console Driver allows plugging and unplugging the USB cable from the console port without affecting Windows HyperTerminal operations. No special drivers are needed for Mac OS X or Linux.

At a time, only one console port can be active. When a cable is plugged into the USB console port, the RJ-45 port becomes inactive. Conversely, when the USB cable is removed from the USB port, the RJ-45 port becomes active.

Baud rates for the USB console port are 1200, 2400, 4800, 9600, 19200, 38400, 57600, and 115200 bps.

Note 4-pin mini USB Type-B connectors might be easily confused with 5-pin mini USB Type-B connectors. Only the 5-pin mini USB Type-B is supported.

USB Console OS Compatibility

- Windows 8, Windows 7, Windows 2000, Window XP 32 bit, Windows Vista 32 bit
- Mac OS X version 10.5.4
- Redhat / Fedora Core 10 with kernel 2.6.27.5-117
- Ubuntu 8.10 with kernel 2.6.27-11

- Debian 5.0 with kernel 2.6
- Suse 11.1 with kernel 2.6.27.7-9

Auxiliary Port Connections

The router has an EIA/TIA-232 asynchronous serial auxiliary port (RJ-45) that supports flow control. Depending on the cable and the adapter used, this port appears as a DTE or DCE device at the end of the cable.

For connection to a modem, you must use an RJ-45-to-DB-25 adapter cable. This cable is orderable separately along with a DB-9-to-DB-25 adapter.

For detailed information about connecting devices to the auxiliary port, see the "Connect to Console Terminal or Modem" section on page 3-23.

For cable and port pinouts, see the *Cisco Modular Access Router Cable Specifications* document.

Prepare for Network Connections

When setting up your router, consider distance limitations and potential electromagnetic interference (EMI) as defined by the applicable local and international regulations.

Network connection considerations are provided for:

- Ethernet Connections, page 2-16

See the following online document for more information about network connections and interfaces:

- *Cisco Modular Access Router Cable Specifications*

Warning **To avoid electric shock, do not connect safety extra-low voltage (SELV) circuits to telephone-network voltage (TNV) circuits. LAN ports contain SELV circuits, and WAN ports contain TNV circuits. Some LAN and WAN ports both use RJ-45 connectors.** Statement 1021

Ethernet Connections

The IEEE has established the Ethernet IEEE 802.3 Standards. The routers support the following Ethernet implementations:

- 1000BASE-T—1000 Mb/s full-duplex transmission over a Category 5 or better unshielded twisted-pair (UTP) cable. Supports the Ethernet maximum length of 328 feet (100 meters).
- 100BASE-T—100 Mb/s full-duplex transmission over a Category 5 or better unshielded twisted-pair (UTP) cable. Supports the Ethernet maximum length of 328 feet (100 meters).
- 10BASE-T—10 Mb/s full-duplex transmission over a Category 5 or better unshielded twisted-pair (UTP) cable. Supports the Ethernet maximum length of 328 feet (100 meters).
- 10GBASE—Cisco 4461 supports 10GE full-duplex.

For information about Ethernet cables, connectors, and pinouts, see the *Cisco Modular Access Router Cable Specifications* document.

Required Tools and Equipment for Installation and Maintenance

Warning **Only trained and qualified personnel should be allowed to install, replace, or service this equipment.** Statement 1030

Warning **This equipment must be installed and maintained by service personnel as defined by AS/NZS 3260. Incorrectly connecting this equipment to a general-purpose outlet could be hazardous. The telecommunications lines must be disconnected 1) before unplugging the main power connector or 2) while the housing is open, or both.** Statement 1043

You need the following tools and equipment to install and upgrade the router and its components:

- ESD-preventive cord and wrist strap
- Number 2 Phillips screwdriver
- Phillips screwdrivers: small, 3/16-in. (4 to 5 mm) and medium, 1/4-in. (6 to 7 mm)
  - To install or remove modules
  - To remove the cover, if you are upgrading memory or other components
- Screws that fit your rack
- Wire crimper
- Wire for connecting the chassis to an earth ground:
  - AWG 6 (13 mm^2) wire for NEBS-compliant chassis grounding
  - AWG 14 (2 mm^2) or larger wire for NEC-compliant chassis grounding
  - AWG 10 (4 mm2) or larger wire for EN/IEC 60950-1 and EN/IEC 62368-1 compliant chassis grounding
- For NEC-compliant grounding, an appropriate user-supplied ring terminal, with an inner diameter of 1/4 in. (5 to 7 mm)

In addition, depending on the type of modules you plan to use, you might need the following equipment to connect a port to an external network:

- Cables for connection to the WAN and LAN ports (dependent on configuration)

Note For more information on cable specifications, see the *Cisco Modular Access Router Cable Specifications* document at cisco.com.

- Ethernet hub or PC with a network interface card for connection to an Ethernet (LAN) port.
- Console terminal (an ASCII terminal or a PC running HyperTerminal or similar terminal emulation software) configured for 9600 baud, 8 data bits, 1 stop bit, no flow control, and no parity.
- Modem for connection to the auxiliary port for remote administrative access (optional).
- Data service unit (DSU) or channel service unit/data service unit (CSU/DSU) as appropriate for serial interfaces.
- External CSU for any CT1/PRI modules without a built-in CSU.

Installation Checklist

The sample installation checklist Figure 2-2lists items and procedures for installing a new router. Make a copy of this checklist and check the tasks when completed. For each router in the site, maintain a copy of the checklist in your site log (described in the next section, "Creating a Site Log").

Installation checklist for site_____

Router name_____

Task	Verified by	Date
Installation checklist copied		
Background information placed in Site Log		
Site power voltages verified		
Installation site power check completed		
Required tools available		
Additional equipment available		
Router received		
Router quick start guide received		
Regulatory Compliance and Safety Information for the Cisco 4000 Series ISRs document received		
Product registration card received		
Cisco.com contact information label received		
Chassis components verified		
Initial electrical connections established		
ASCII terminal (for local configuration) or modem (for remote configuration) available		
Signal distance limits verified		
Startup sequence steps completed		
Initial operation verified		
Software image verified		

Creating a Site Log

The Site log provides a record of all actions performed at all routers in the site. Keep it in an accessible place near the chassis those who perform regular tasks have access to it. In this log, maintain the installation checklist to verify steps in the installation and maintenance of the router. Site log entries may include the following information:

- Installation progress: Make a copy of the installation checklist and file it in the site log. Check tasks as each procedure is completed.
- Upgrade and maintenance procedures: Use the site log as a record of ongoing router maintenance and expansion.
- A site log may include the following events:
  - Installation of network modules
  - Removal or replacement of network modules and other upgrades
  - Configuration changes
  - Maintenance schedules and requirements
  - Intermittent problems
  - Comments and notes

.



Install and Connect Cisco 4000 Series ISRs

This chapter describes how to install and connect Cisco 4000 Series Integrated Services Routers (ISRs) to LAN, WAN, and Voice networks. The following sections provide technical details.

- Install the Router, page 3-5
- Chassis Grounding, page 3-20
- Connect Power, page 3-21
- Connect to Console Terminal or Modem, page 3-23
- Install Cisco Microsoft Windows USB Device Driver, page 3-25
- Uninstall Cisco Microsoft Windows USB Driver, page 3-28
- Connect WAN, LAN, and Voice Interfaces, page 3-29

Warning **To reduce the risk of electric shock, secure the modules with provided screws**. Statement 347

Warning **To reduce the risk of electric shock, the chassis of this equipment needs to be connected to permanent earth ground during normal use.** Statement CS-0445

Warning **To reduce risk of electric shock and fire, a readily accessible two-poled disconnect device must be incorporated in the fixed wiring**. Statement 1022

Warning To see translations of the warnings that appear in this publication, see the *Regulatory Compliance and Safety Information for the Cisco 4000 Series ISRs* document. **Only trained and qualified personnel should be allowed to install, replace, or service this equipment.** Statement 1030

Warning **This unit might have more than one power supply connection. All connections must be removed to de-energize the unit.** Statement 1028

Warning **Blank faceplates and cover panels serve three important functions: they prevent exposure to hazardous voltages and currents inside the chassis; they contain electromagnetic interference (EMI) that might disrupt other equipment; and they direct the flow of cooling air through the chassis. Do not operate the system unless all cards, faceplates, front covers, and rear covers are in place.** Statement 1029

Warning **Hazardous network voltages are present in WAN ports regardless of whether power to the unit is OFF or ON. To avoid electric shock, use caution when working near WAN ports. When detaching cables, detach the end away from the unit first.** Statement 1026

Warning **This equipment must be grounded. Never defeat the ground conductor or operate the equipment in the absence of a suitably installed ground conductor. Contact the appropriate electrical inspection authority or an electrician if you are uncertain that suitable grounding is available.** Statement 1024

Warning **Before opening the unit, disconnect the telephone-network cables to avoid contact with telephone-network voltages.** Statement 1041

Warning **Do not use this product near water; for example, near a bath tub, wash bowl, kitchen sink or laundry tub, in a wet basement, or near a swimming pool.** Statement 1035

Warning **Never install telephone jacks in wet locations unless the jack is specifically designed for wet locations.** Statement 1036

Warning **Never touch uninsulated telephone wires or terminals unless the telephone line has been disconnected at the network interface.** Statement 1037

Warning **Avoid using a telephone (other than a cordless type) during an electrical storm. There may be a remote risk of electric shock from lightning.** Statement 1038

Warning **To report a gas leak, do not use a telephone in the vicinity of the leak.** Statement 1039

Warning **This unit is intended for installation in restricted access areas. A restricted access area can be accessed only through the use of a special tool, lock and key, or other means of security.** Statement 1017

Warning **Blank faceplates and cover panels serve three important functions: they prevent exposure to hazardous voltages and currents inside the chassis; they contain electromagnetic interference (EMI) that might disrupt other equipment; and they direct the flow of cooling air through the chassis. Do not operate the system unless all cards, faceplates, front covers, and rear covers are in place.** Statement 1029

Warning **The covers are an integral part of the safety design of the product. Do not operate the unit without the covers installed.** Statement 1077

Warning **Instructed person is someone who has been instructed and trained by a skilled person and takes the necessary precautions when working with equipment. Skilled person/Qualified personnel is someone who has training or experience in the equipment technology and understand potential hazards when working with equipment.** Statement 1089

Warning **Only skilled person should be allowed to install, replace, or service this equipment. Refer to statement 1089 for description of skilled person.** Statement 1090

Warning **Only instructed person or skilled person should be allowed to install, replace, or service this equipment. Refer to statement 1089 for description of skilled person.** Statement 1091

Warning **This equipment must be grounded.To reduce the risk of electric shock, the power cord, plug or combination must be connected to a properly grounded electrode, outlet or terminal.** Statement 1252—Equipment Grounding

Before You Begin

Before installing and connecting a Cisco 4000 Series Integrated Services Router, read the safety warnings and gather the following tools and equipment.

- ESD-preventive cord and wrist strap
- Number 2 Phillips screwdriver
- Flat-blade screwdrivers: small, 3/16-in. (4 to 5 mm) and medium, 1/4-in. (6 to 7 mm)
  - To install or remove modules
  - To remove the cover, if you are upgrading memory or other components
- Screws that fit your rack
- Wire crimper
- Wire for connecting the chassis to an earth ground:
  - AWG 6 (13 mm) wire for NEBS-compliant chassis grounding
  - AWG 14 (2 mm) or larger wire for NEC-compliant chassis grounding

  - AWG 18 (1 mm) or larger wire for EN/IEC 60950-compliant chassis grounding
- For NEC-compliant grounding, an appropriate user-supplied ring terminal, with an inner diameter of 1/4 in. (5 to 7 mm)

In addition, depending on the type of modules you plan to use, you might need the following equipment to connect a port to an external network:

- Cables for connection to the WAN and LAN ports (dependent on configuration)

Note For more information on cable specifications, see the *Cisco Modular Access Router Cable Specifications* document at cisco.com.

- Ethernet hub or PC with a network interface card for connection to an Ethernet (LAN) port.
- Console terminal (an ASCII terminal or a PC running HyperTerminal or similar terminal emulation software) configured for 9600 baud, 8 data bits, 1 stop bit, no flow control, and no parity.
- Modem for connection to the auxiliary port for remote administrative access (optional).
- Data service unit (DSU) or channel service unit/data service unit (CSU/DSU) as appropriate for serial interfaces.
- External CSU for any CT1/PRI modules without a built-in CSU.

Also, you need to have access to the following:

CLI Console Access

Use the USB or RJ-45 console port on the router to access the Cisco Internet Operating System (IOS-XE) command line interface (CLI) on the router and to perform configuration tasks. A terminal emulation program is required to establish communication between the router and a PC. See the "Connect to Console Terminal or Modem" section on page 3-23 for instructions.

Note A Microsoft Windows USB driver must be installed before you establish physical connectivity between the router and the PC.

Slot and Port Numbers

The routers have built in ports and new slots. The new slots accommodate new modules and interface cards; SM-Xs, NIMs, ISCs, PVDM4s, and the Cisco E-Series Server modules. See the "Slots, Subslots (Bay), Ports, and Interfaces in Cisco 4000 Series ISRs" section on page 1-44 for slot and port numbering.

Software Licenses

To install features on the router, you must purchase a software package. See the "Licensing" section of the *Software Configuration Guide for the Cisco 4400 and Cisco 4300 Series ISRs*.

Unpack the Router

Do not unpack the router until you are ready to install it. If the final installation site is not ready as yet, keep the chassis in its shipping container to prevent accidental damage. When you are ready to install the router, unpack it.

The router, accessory kit, publications, and any optional equipment you ordered may be shipped in more than one container. When you unpack the containers, check the packing list to ensure that you received all of the items on the list.

Install the Router

If you need to install Network Interface Modules (NIMs), Service Modules (SMs), and Field-Replaceable Units (FRUs), you can install them either before or after you install the router. Ideally, you install modules when you have the best access to the back panel of the router. Internal modules and FRUs, such as SMs, NIMs or Packet Voice Digital Signal Processor Module (PVDM4s), Compact Flash Cards, and fan trays should be installed before rack-mounting.

You can install the Cisco 4000 Series Integrated Services Routers in one of the following ways:

- Set the router chassis on a desktop
- Attach the router chassis to the wall (Cisco 4461, 4451, and 4351 ISRs do not support wall mounting.)
- Mount the router chassis in a rack

Warning **Before working on a system that has an On/Off switch, turn OFF the power and unplug the power cord.** Statement 1.

Caution To prevent damage to the chassis, never attempt to lift or tilt the chassis by holding it by the plastic panel on the front. Always hold the chassis by the sides of the metal body.

Set Chassis on Desktop

You can place the router on a desktop, bench top, or shelf.

Note Do not set the chassis in an area where high acoustic noise can be an issue.

Warning **To prevent personal injury or damage to the chassis, never attempt to lift or tilt the chassis using the handles on modules (such as power supplies, fans, or cards); these types of handles are not designed to support the weight of the unit.** Statement 1032.

Caution Do not place anything on top of the router that weighs more than 10 pounds (4.5 kg), and do not stack routers on a desktop. Excessive distributed weight of more than 10 pounds, or pound point load of 10 pounds on top could damage the chassis.

Caution Your chassis installation must allow unrestricted airflow for chassis cooling. For placing the router on a desktop, keep at least 1 inch (2.54 cm) of clear space beside the cooling inlet and exhaust vents.

After the router is installed, you must connect the chassis to a reliable earth ground. For the chassis ground connection procedures, see the "Chassis Grounding" section on page 3-20.

Attach Chassis to Wall or Mount Chassis in Rack

The tasks that you perform for attaching the router chassis to the wall, or for mounting it in a rack, are based on the specific model of the Cisco 4000 Series Integrated Service Router.

See the relevant installation sub-section for your specific router in the Cisco 4000 Series ISRs:

- Install Cisco 4400 or 4300 ISR
- Install Cisco 4200 Series ISR

Install Cisco 4400 or 4300 ISR

This section describes the installation procedure that is common for all Cisco 4400 and 4300 Series ISRs.

Note For illustration purposes, we have used images of Cisco 4400 Series ISRs in all figures. You cannot wall mount the Cisco 4461, 4451, and 4351 ISR as these routers do not support wall mounting.

Attach Cisco 4400 or 4300 ISR Chassis to Wall

Step 1 Attach the wall-mounting brackets to the router chassis as shown in Figure 3-1 using the four PHMS screws and the plastic spacers provided for each bracket.

Figure 3-1 Bracket Installation for Wall Mounting (Cisco 4431 ISR shown)

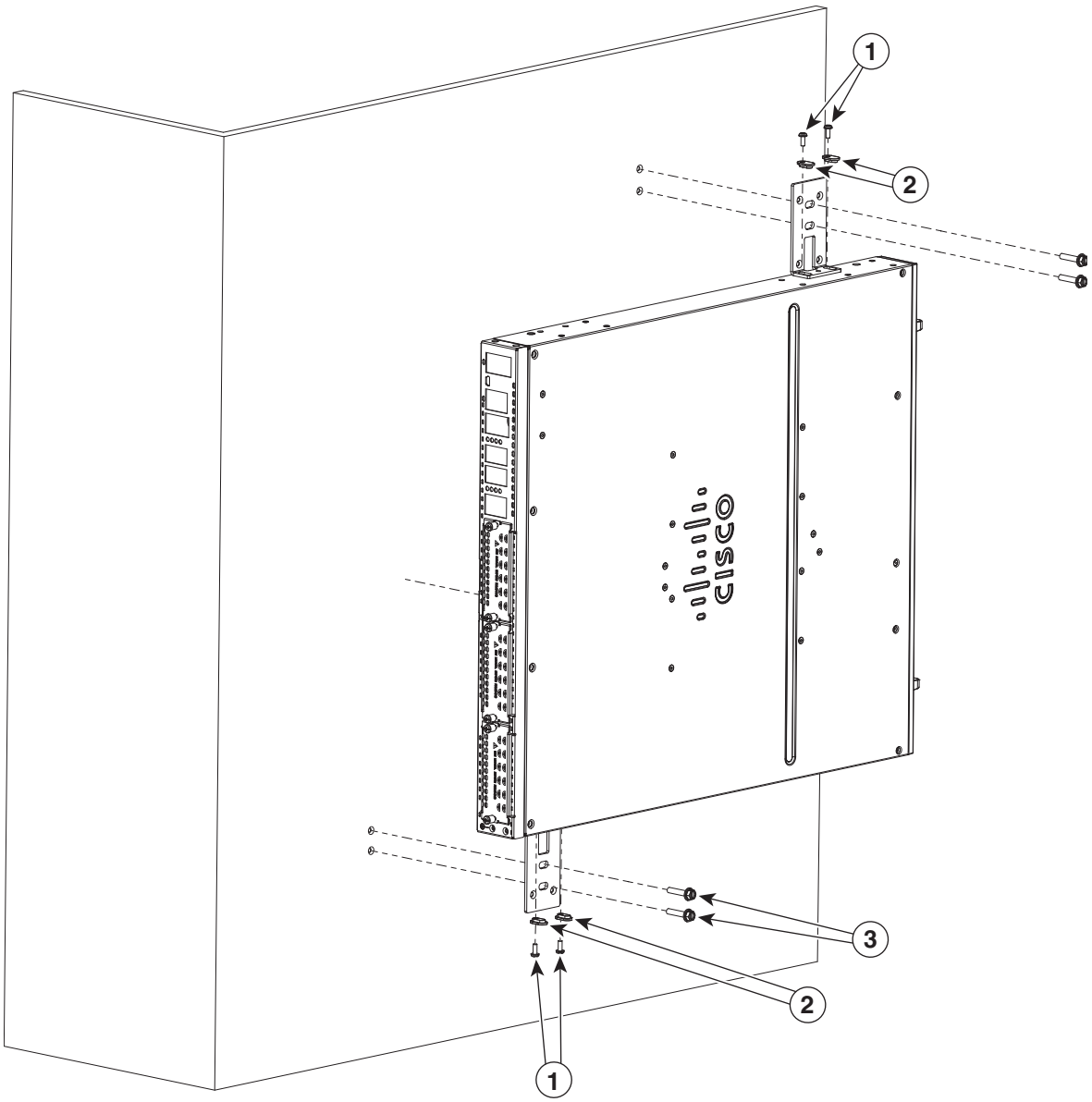

1	Machine screws (included in install kit)	**2**	Plastic spacers (included)
3	Wall-mounting hardware (customer supplied)		

Caution Do not over-torque the screws. The recommended torque is 15 to 18 inch-lb (1.7 to 2.0 N-m).

Note To attach to a wall stud, each bracket requires one number-10 wood screws (round- or pan-head) with number-10 washers, or two number-10 washer-head screws. The screws must be long enough to penetrate at least 1.5 inches (38.1 mm) into the supporting wood or metal wall stud.

Note For hollow-wall mounting, each bracket requires two wall anchors with washers. Wall anchors and washers must be size number 10. Route the cables so that they do not put a strain on the connectors or mounting hardware.

Caution Your chassis installation must allow unrestricted airflow for chassis cooling.

Step 2 Attach the router to the wall using the brackets.

Note If you prefer, you can also install the router diagonally using the other two sides.

After the router is installed, you must connect the chassis to a reliable earth ground. For the chassis ground connection procedures, see the "Chassis Grounding" section on page 3-20.

Mount Cisco 4400 or 4300 ISR Chassis in Rack

Warning **If the rack is provided with stabilizing devices, install the stabilizers before mounting or servicing the unit in the rack.** Statement 1006

Warning **This equipment must be grounded. Never defeat the ground conductor or operate the equipment in the absence of a suitably installed ground conductor. Contact the appropriate electrical inspection authority or an electrician if you are uncertain that suitable grounding is available.** Statement 1024

Warning **To prevent the system from overheating, do not operate it in an area that exceeds the maximum recommended ambient temperature of: 40 degrees C.** Statement 1047

Note Cisco 4461 ISR can operate in an area with an ambient temperature of 55 degrees C.

Cisco 4000 Series ISRs can be installed in 19-inch (48.26-cm) EIA and 23-inch (58.42-cm) Southwestern Bell Corporation (SBC) racks. Cisco 4000 Series ISRs can also be mounted in a 600-mm ETSI rack. Use the standard brackets shipped with the router for mounting the chassis in a 19-inch EIA rack; you can order optional larger brackets for mounting the chassis in a 23-inch SBC rack.

You can mount the router in the following ways:

- Center-front mounting: Brackets attached in the center front of the chassis with only the front panel facing forward.

- Center-back mounting: Brackets attached in the center back of the chassis with only the back panel facing forward.
- Front mounting: Brackets attached at the front of the chassis with the front panel facing forward.
- Back mounting: Brackets attached at the back of the chassis with the back panel facing forward.

Step 1 Attach the mounting brackets to the router chassis as shown in Figure 3-2 through Figure 3-5, using the screws provided.

Caution Do not over-torque the screws. The recommended torque is 15 to 18 inch-lb (1.7 to 2.0 N-m).

Attach the second bracket to the opposite side of the chassis. Use a number-2 Phillips screwdriver to install the number-8 bracket screws.

Caution Your chassis installation must allow unrestricted airflow for chassis cooling.

Figure 3-2 Bracket Installation for Front Mounting (Cisco 4451-X ISR shown)

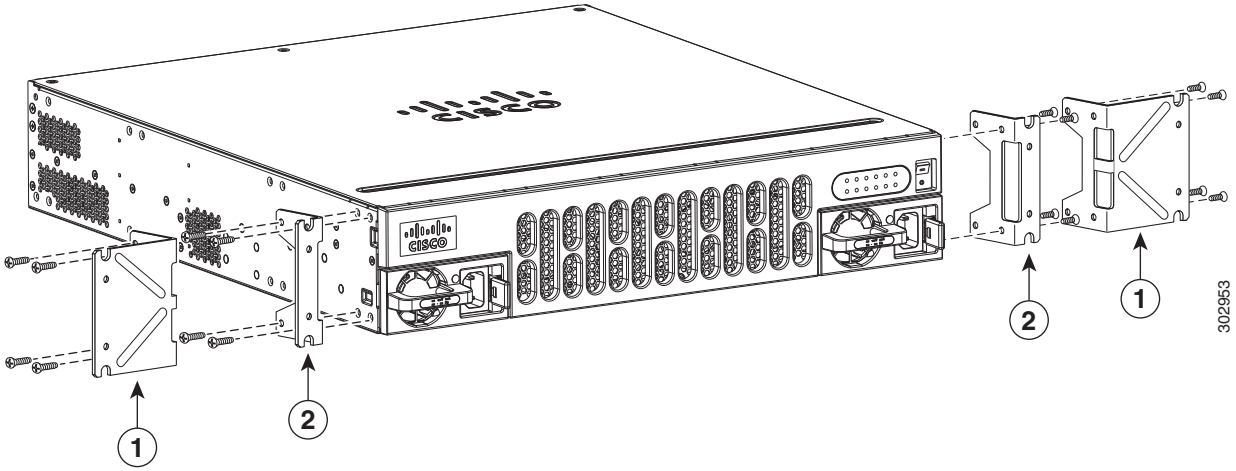

1	23-inch SBC[1] brackets	**2**	19-inch EIA brackets

1. Southwestern Bell Corporation (SBC)

Figure 3-3 Bracket Installation for Center-Front Mounting (Cisco 4451-X ISR shown)

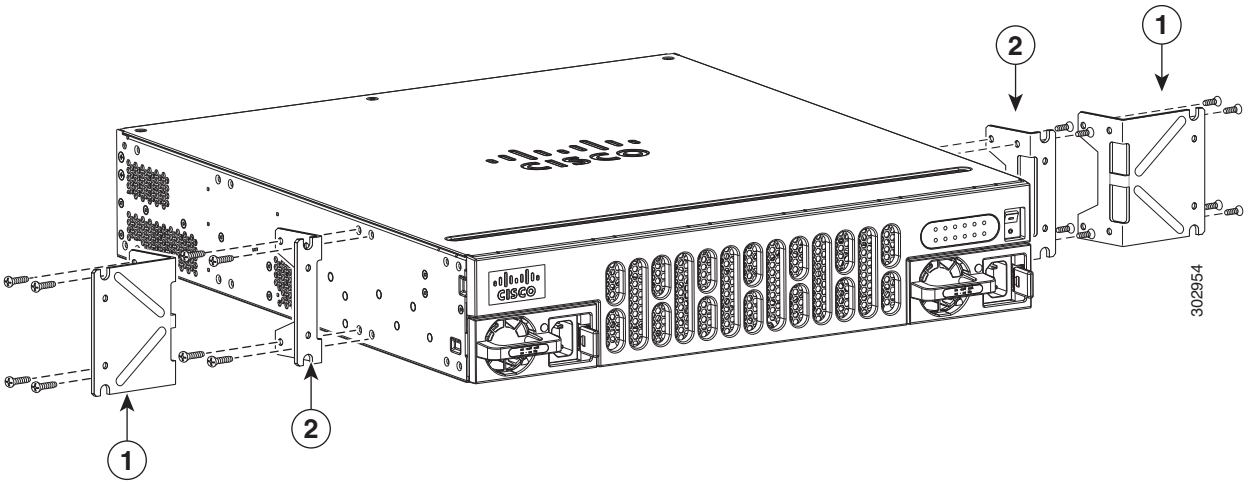

1	23-inch SBC brackets	**2**	19-inch EIA brackets

Step 2 Use the screws provided with the rack to install the chassis in the rack. (See Figure 3-4 and Figure 3-6.)

For both the 19-inch EIA brackets and the 23-inch SBC brackets, start the lower pair of screws first, and rest the brackets on the lower screws while you insert the upper pair of screws.

Tip The screw slots in the brackets are spaced to line up with every *second* pair of screw holes in the rack. When the correct screw holes are used, the small, threaded holes in the brackets line up with unused screw holes in the rack. If the small holes do not line up with the rack holes, you must raise or lower the brackets to the next rack hole.

Warning **To prevent bodily injury when mounting or servicing this unit in a rack, you must take special precautions to ensure that the system remains stable. The following guidelines are provided to ensure your safety:**

- **This unit should be mounted at the bottom of the rack if it is the only unit in the rack.**
- **When mounting this unit in a partially filled rack, load the rack from the bottom to the top with the heaviest component at the bottom of the rack.**
- **If the rack is provided with stabilizing devices, install the stabilizers before mounting or servicing the unit in the rack.** Statement 1006

Warning **To prevent personal injury or damage to the chassis, never attempt to lift or tilt the chassis using the handles on modules (such as power supplies, fans, or cards); these types of handles are not designed to support the weight of the unit.** Statement 1032

Caution Be sure to leave some space above and below each router in a rack to allow for cooling air circulation.

Figure 3-4 Bracket Installation for Back Mounting (Cisco 4451-X ISR shown)

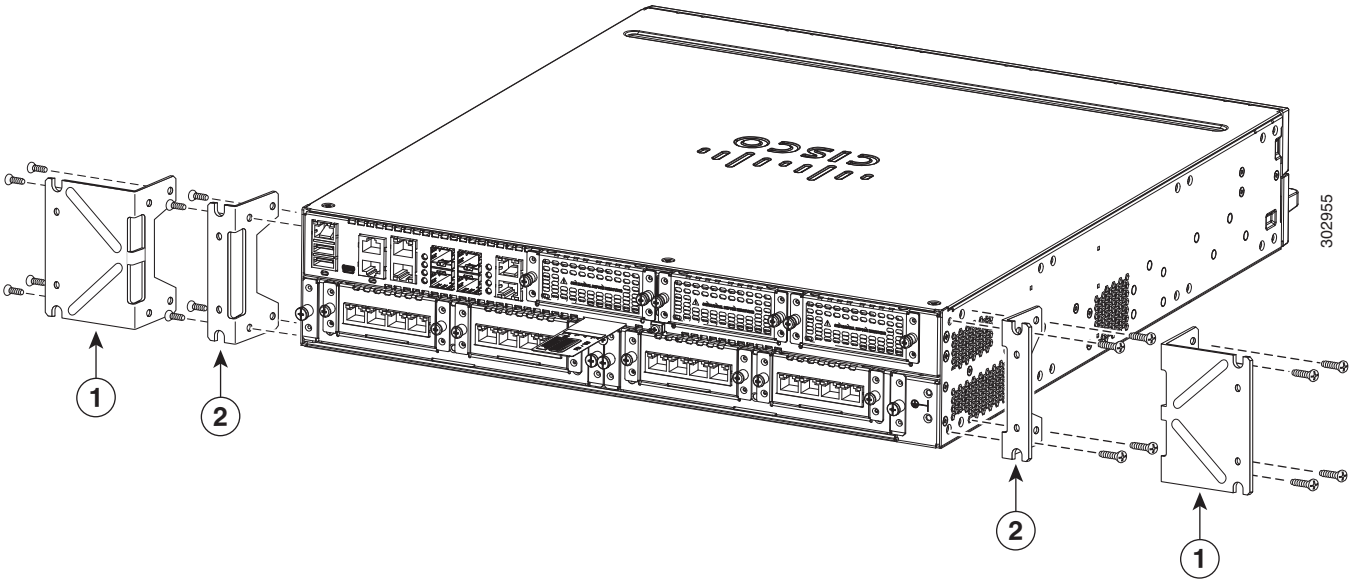

1	23-inch SBC brackets	**2**	19-inch EIA brackets

Figure 3-5 Bracket Installation for Center-Back Mounting (Cisco 4451-X ISR shown)

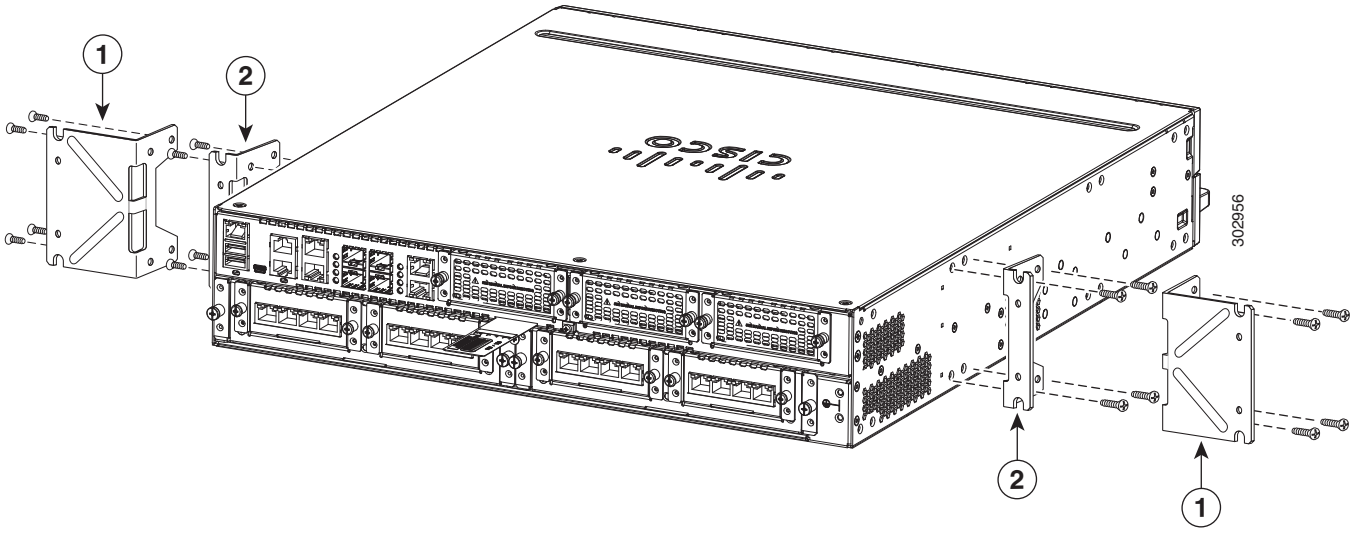

1	23-inch SBC brackets	**2**	19-inch EIA brackets

Figure 3-6 shows a typical installation in a rack.

Figure 3-6 Mounting the Chassis in a Rack (Typical)

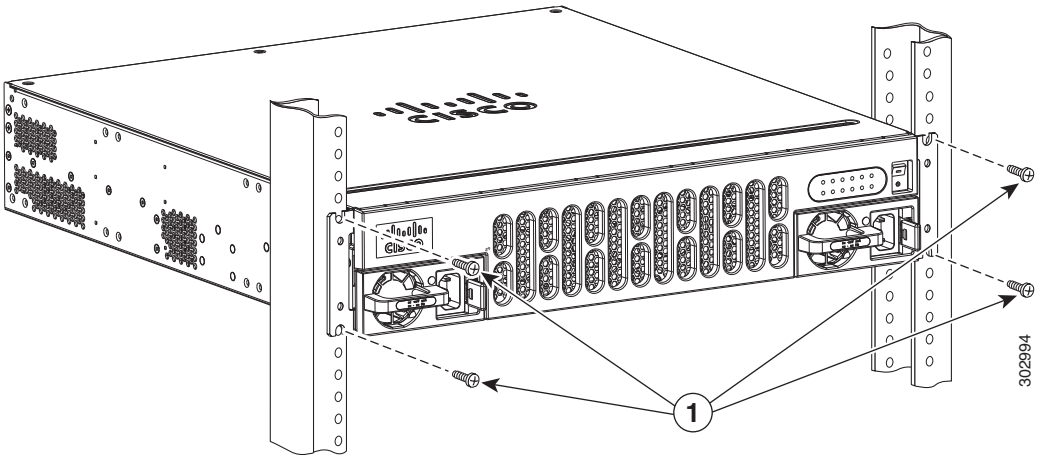

1	Mounting screws (4)

Figure 3-7 shows an installation with a chassis rear-forward.

Figure 3-7 Mounting the Chassis in a Rack, Rear Forward (Cisco 4451-X ISR shown)

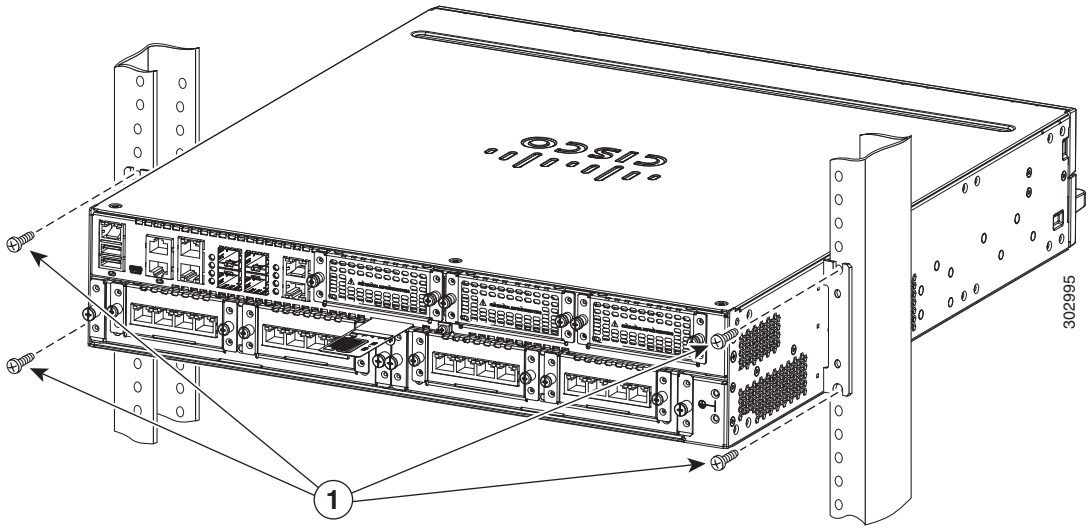

1	Mounting screws (4)

After the router is installed, you must connect the chassis to a reliable earth ground. For the chassis ground connection procedures, see the "Chassis Grounding" section on page 3-20.

Install Cisco 4200 Series ISR

This section describes the installation procedure that is common for all Cisco 4200 Series ISRs.

Note For illustration purposes, we have used images of Cisco 4221 ISR in all figures.

Attach Cisco 4200 ISR Chassis to Wall

Step 1 Attach the wall-mounting brackets to the router chassis as shown in Figure 3-8 using the four PHMS screws and the plastic spacers provided for each bracket.

Figure 3-8 Bracket Installation for Wall Mounting (Cisco 4221 ISR shown)

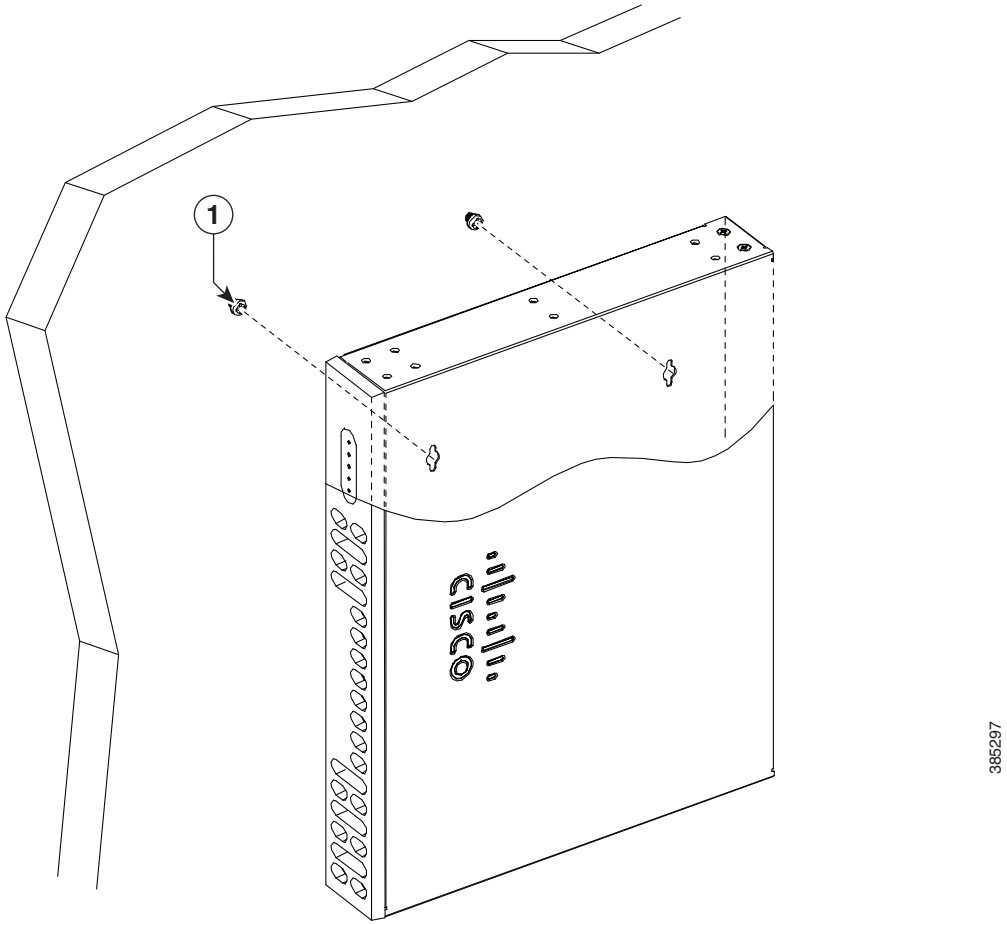

1	Machine screws		

Note Do not over-torque the screws. The recommended torque is 15 to 18 inch-lb (1.7 to 2.0 N-m).

Note To attach to a wall stud, each bracket requires one number-10 wood screws (round- or pan-head) with number-10 washers, or two number-10 washer-head screws. The screws must be long enough to penetrate at least 1.5 inches (38.1 mm) into the supporting wood or metal wall stud.

Note For hollow-wall mounting, each bracket requires two wall anchors with washers. Wall anchors and washers must be size number 10. Route the cables so that they do not put a strain on the connectors or mounting hardware.

Note Your chassis installation must allow unrestricted airflow for chassis cooling.

Step 2 Attach the router to the wall using the brackets.

After the router is installed, you must connect the chassis to a reliable earth ground. For the chassis ground connection procedures, see the "Chassis Grounding" section on page 3-20.

Mount Cisco 4200 ISR Chassis in Rack

Step 1 Attach the brackets to the router chassis (towards the front or back) as shown in Figure 3-10.

Figure 3-9 Bracket Installation for Front Mounting (Cisco 4221 ISR shown)

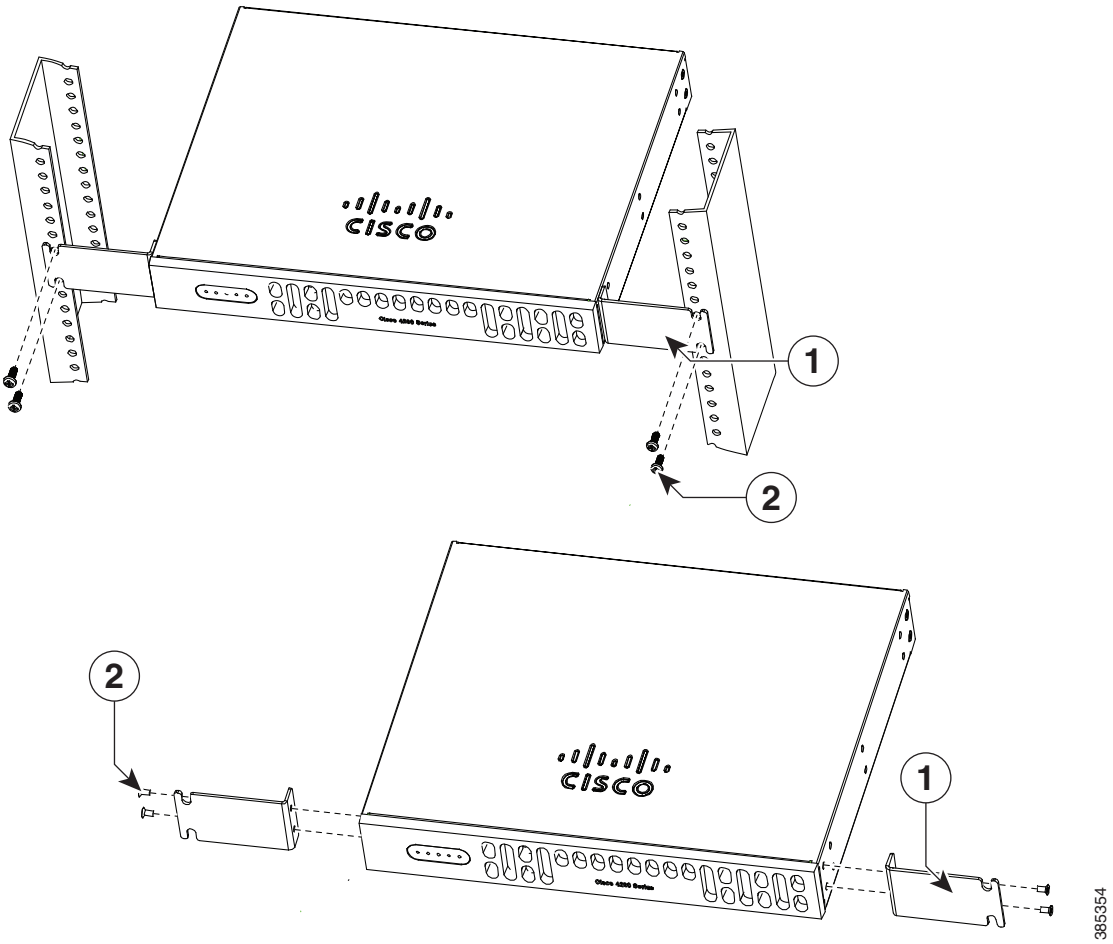

1	Mounting Screws	**2**	23-inch SBC brackets

Step 2 Use the screws provided with the rack to install the chassis in the rack. (See Figure 3-10.)

Figure 3-10 Bracket Installation for Back Mounting

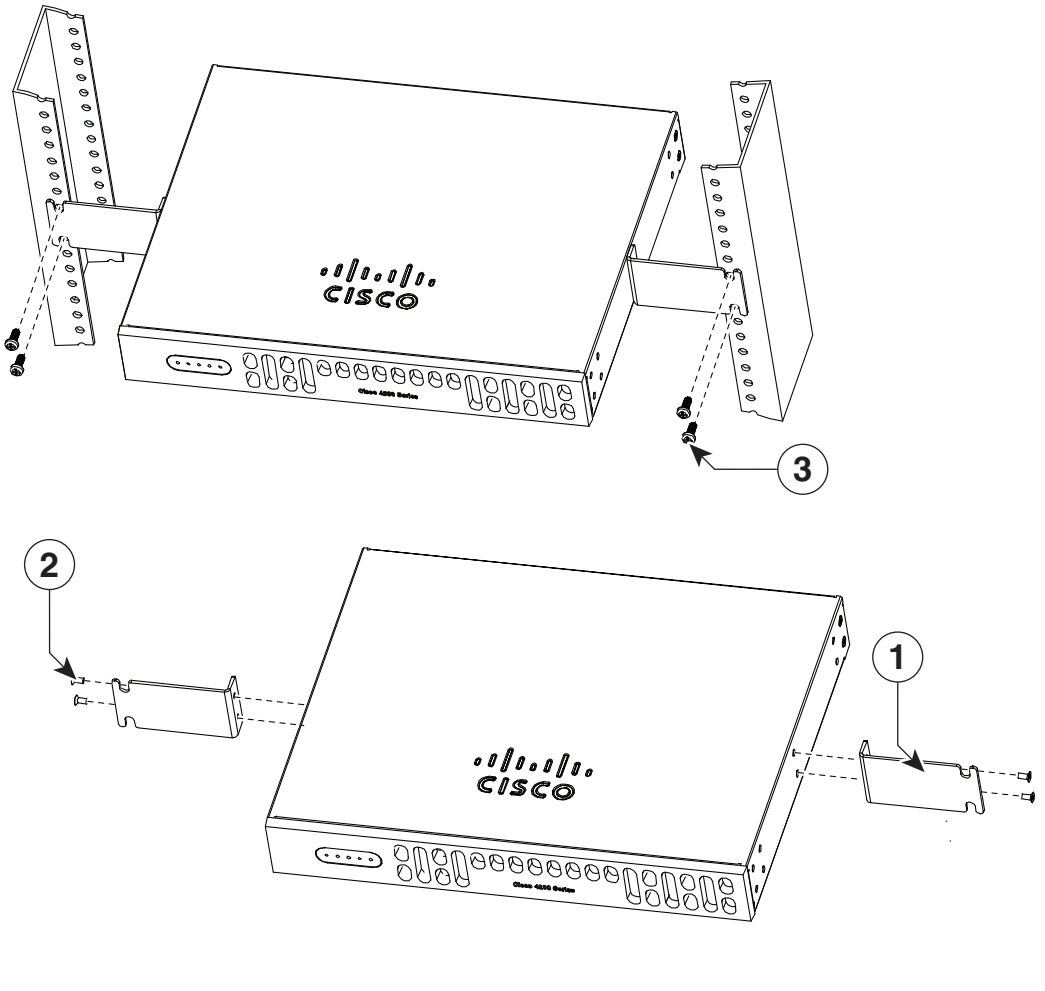

1	Screws	**2**	23-inch SBC brackets

Warning **To prevent bodily injury when mounting or servicing this unit in a rack, you must take special precautions to ensure that the system remains stable. The following guidelines are provided to ensure your safety:**

- **This unit should be mounted at the bottom of the rack if it is the only unit in the rack.**
- **When mounting this unit in a partially filled rack, load the rack from the bottom to the top with the heaviest component at the bottom of the rack.**
- **If the rack is provided with stabilizing devices, install the stabilizers before mounting or servicing the unit in the rack.** Statement 1006

Warning **To prevent personal injury or damage to the chassis, never attempt to lift or tilt the chassis using the handles on modules (such as power supplies, fans, or cards); these types of handles are not designed to support the weight of the unit.** Statement 1032

Caution Be sure to leave some space above and below each router in a rack to allow for cooling air circulation.

After the router is installed, you must connect the chassis to a reliable earth ground. For the chassis ground connection procedures, see the "Chassis Grounding" section on page 3-20.

Mount Cisco 4200 ISR Chassis in Rack with AC Power Unit

Step 1 Attach the brackets to the router chassis (towards the left or right) as shown in Figure 3-11 and Figure 3-12.

Figure 3-11 AC Power Bracket Installation for Left Mounting (Cisco 4221 ISR shown)

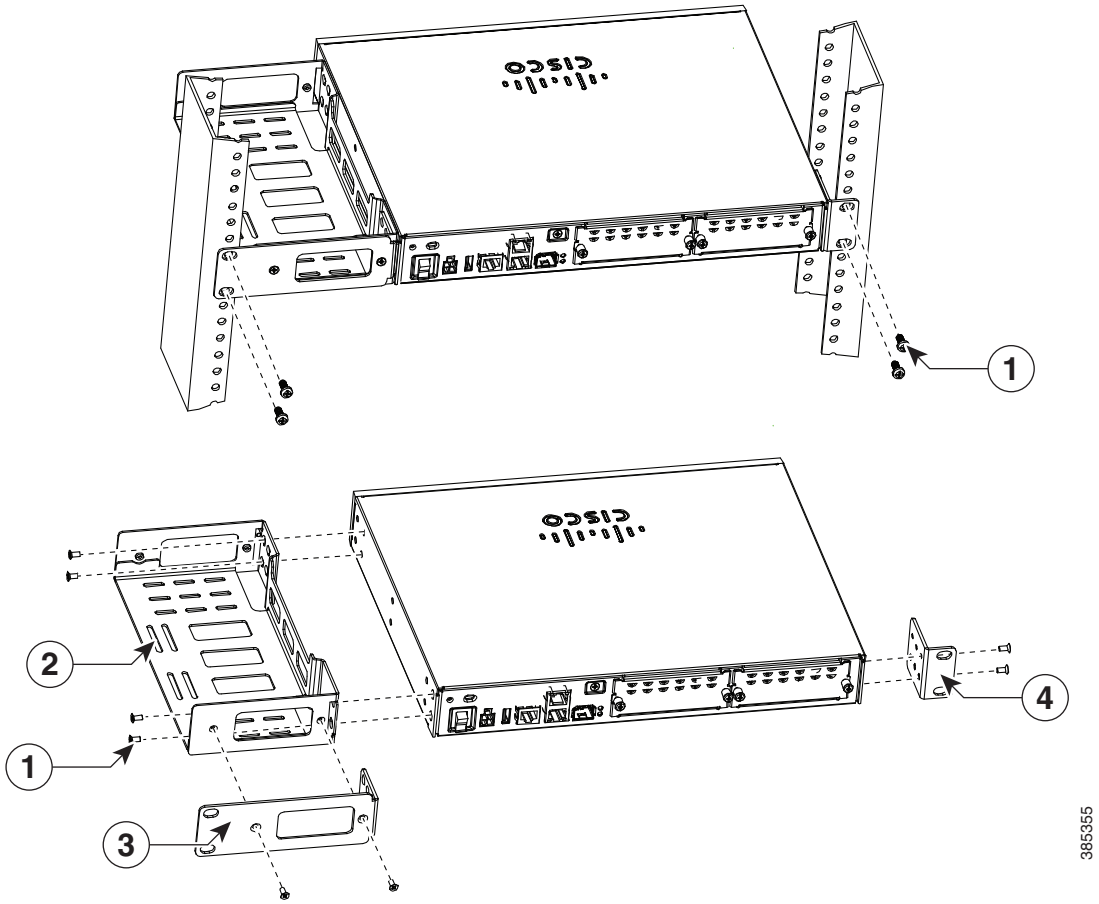

1	Mounting Screws	**2**	AC power supply unit installation module
3	23-inch SBC brackets	**4**	19-inch SBC brackets

Figure 3-12 AC Power Bracket Installation for Right Mounting (Cisco 4221 ISR shown)

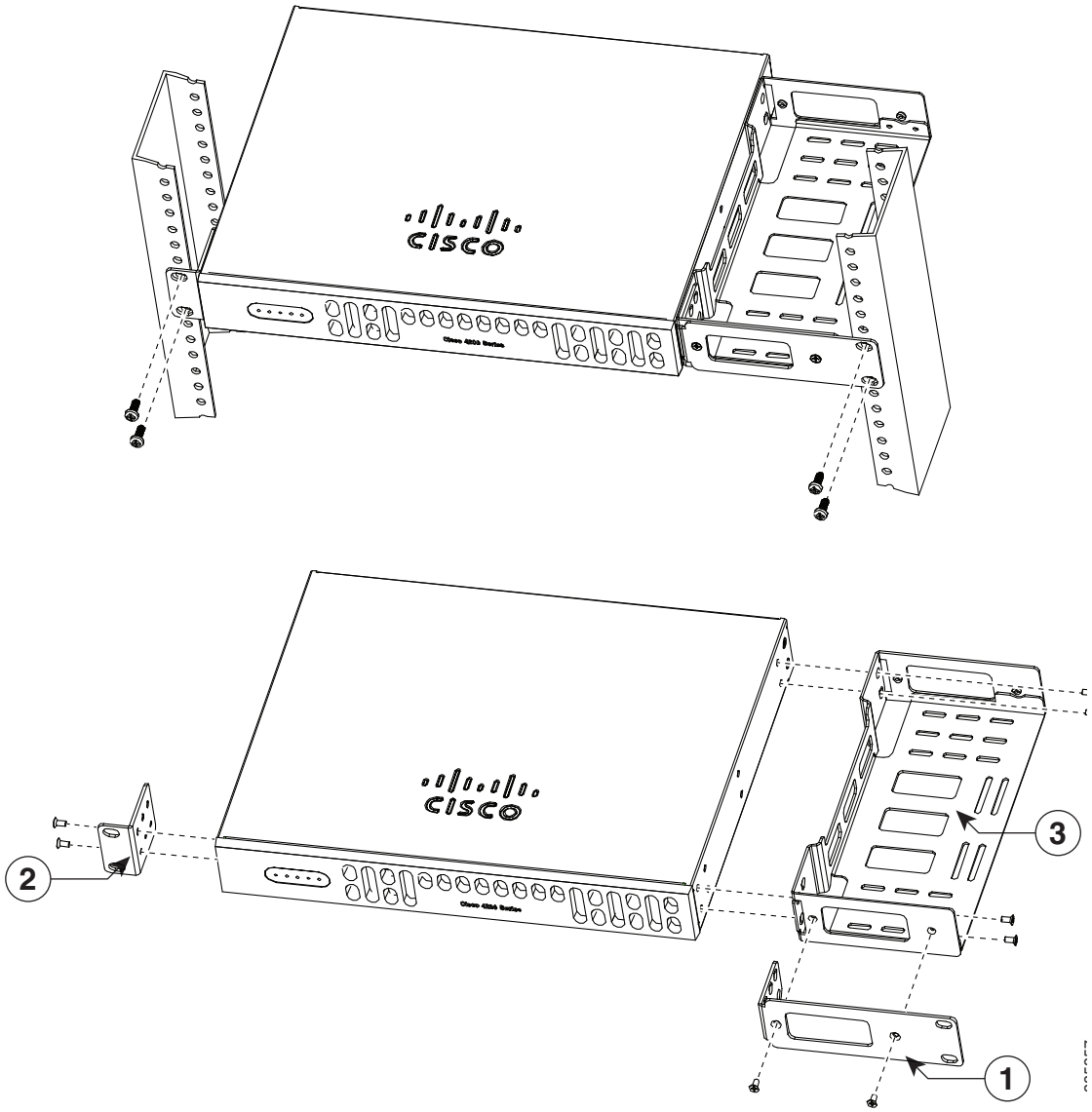

1	23-inch SBC brackets	**2**	19-inch SBC brackets
3	AC power supply unit installation module		

After the router is installed, you must connect the chassis to a reliable earth ground. For the chassis ground connection procedures, see the "Chassis Grounding" section on page 3-20.

Chassis Grounding

Warning **This equipment must be grounded. Never defeat the ground conductor or operate the equipment in the absence of a suitably installed ground conductor. Contact the appropriate electrical inspection authority or an electrician if you are uncertain that suitable grounding is available.** Statement 1024

Warning **During this procedure, wear grounding wrist straps to avoid ESD damage to the card. Do not directly touch the backplane with your hand or any metal tool, you could shock yourself.** Statement 94

You must connect the chassis to a reliable earth ground; the ground wire must be installed in accordance with local electrical safety standards.

- For grounding, use size 6 AWG (13 mm^2) copper wire and the ground lug provided in the accessory kit.

Note This equipment is suitable for installation in Network Telecommunications Facilities and locations where the NEC applies. The equipment is suitable for installation as part of the Common Bonding Network (CBN).

- For NEC-compliant grounding, use size 14 AWG (2 mm^2) or larger copper wire and an appropriate user-supplied ring terminal with an inner diameter of 1/4 in. (5–7 mm).
- For EN/IEC 60950-1 and EN/IEC 62368-1 compliant grounding, use size 10 AWG (4 mm^2) or larger copper wire and an appropriate user-supplied ring terminal.

To install the ground connection for your router, perform the following steps:

Step 1 Strip one end of the ground wire to the length required for the ground lug or terminal.

- For the ground lug: approximately 0.75 inch (20 mm)
- For user-provided ring terminal: as required

Step 2 Crimp the ground wire to the ground lug or ring terminal using a crimp tool of the appropriate size.

Step 3 Attach the ground lug or ring terminal to the chassis as shown in Figure 3-13. For a ground lug, use the two screws with captive locking washers provided. For a ring terminal, use one of the screws provided. Tighten the screws to a torque of 8 to 10 in-lb (0.9 to 1.1 N-m).

Figure 3-13 Chassis Ground Connection on the Router (Cisco 4451-X ISR shown) Chassis

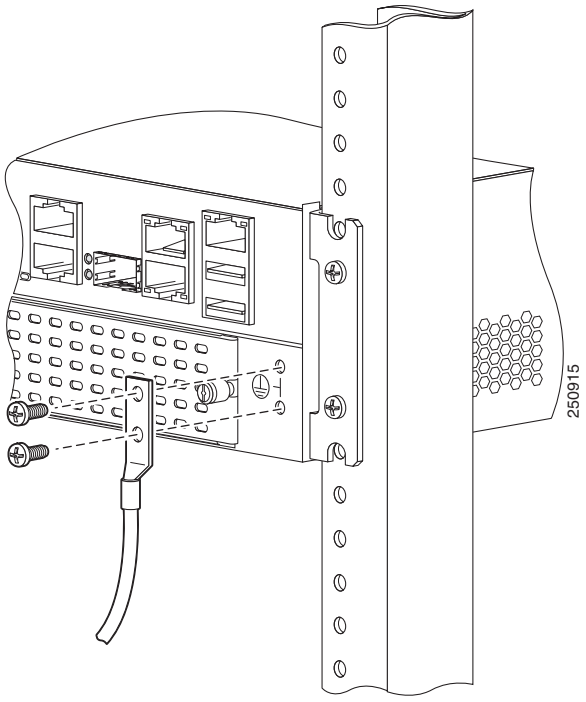

Step 4 Connect the other end of the ground wire to a known reliable earth ground point at your site.

Connect Power

This section explains how to connect AC power to the router.

Warning **Read the installation instructions before connecting the system to the power source.** Statement 1004

Warning **This unit might have more than one power supply connection. All connections must be removed to de-energize the unit.** Statement 1028

Warning **Only trained and qualified personnel should be allowed to install, replace, or service this equipment.** Statement 1030

Note The installation must comply with all required electrical codes applicable at the installation site.

Warning **When installing the product, please use the provided or designated connection cables/power cables/AC adaptors. Using any other cables/adaptors could cause a malfunction or a fire. Electrical Appliance and Material Safety Law prohibits the use of UL-certified cables (that have the "UL" shown on the code) for any other electrical devices than products designated by CISCO. The use of cables that are certified by Electrical Appliance and Material Safety Law (that have "PSE" shown on the code) is not limited to CISCO-designated products.** Statement 371.

Connect to AC Power

If your router uses AC power, connect it to a 15 A, 120 VAC (10 A, 240 VAC) circuit with overcurrent protection.

Note The input voltage tolerance limits for AC power are 90 and 264 VAC.

Note This product requires surge protection to be provided as part of the building installation. To comply with the Telcordia GR-1089 NEBS standard for electromagnetic compatibility and safety, an external surge protective device (SPD) is required at the AC power service equipment.

Warning **AC connected units must have a permanent ground connection in addition to the power cable ground wire. NEBS-compliant grounding satisfies this requirement.** Statement 284

Warning **This product requires short-circuit (overcurrent) protection, to be provided as part of the building installation. Install only in accordance with national and local wiring regulations.** Statement 1045

Warning **This product relies on the building's installation for short-circuit (overcurrent) protection. Ensure that the protective device is rated not greater than:**
15A, 120VAC (16A, 240VAC). Statement 1005

Connect to Console Terminal or Modem

The router has asynchronous serial ports and auxiliary ports. These ports provide administrative access to the router either locally (with a console terminal or a PC) or remotely (with a modem).To configure the router through the Cisco IOS CLI, you must establish a connection between the router console port and a terminal or a PC.

Use the following cables and adapters to establish a local or remote connection.

Table 3-1 Local and Remote Connections

Port Type	Cable	Section
Serial (RJ-45)	EIA RJ-45	Connect to Serial Port with Microsoft Windows
Serial (USB)	USB 5-pin mini USB Type-B-to-USB Type-A	
Auxiliary (Modem)	DB-9-to-DB-25	Connect WAN, LAN, and Voice Interfaces

Connect to Serial Port with Microsoft Windows

Note Install the USB device driver before establishing a physical connection between the router and the PC using the USB Console cable plugged into the USB serial port; otherwise, the connection fails. See the "Install Cisco Microsoft Windows USB Device Driver" section on page 3-25.

Step 1 Connect the end of the console cable with the RJ-45 connector to the light blue console port on the router.

or

Connect a USB 5-pin mini USB Type-B to the USB console port as shown in Figure 3-14. If you are using the USB serial port for the first time on a Windows-based PC, install the USB driver now according to the instructions in the following sections.

- "Install Cisco Microsoft Windows XP USB Driver" section on page 3-26
- "Install Cisco Microsoft Windows 2000 USB Driver" section on page 3-26
- "Install Cisco Microsoft Windows Vista USB Driver" section on page 3-26

Note You cannot use the USB port and the EIA port concurrently. See "Connect WAN, LAN, and Voice Interfaces" section on page 3-29. When the USB port is used it takes priority over the RJ-45 EIA port.

Step 2 Connect the end of the cable with the DB-9 connector (or USB Type-A) to the terminal or PC. If your terminal or PC has a console port that does not accommodate a DB-9 connector, you must provide an appropriate adapter for that port.

Step 3 To communicate with the router, start a terminal emulator application. This software should be configured with the following parameters:

- 9600 baud

- 8 data bits
- no parity
- 1 stop bit
- no flow control

Figure 3-14 Connecting the USB Console Cable to the Router (shown: Cisco ISR 4451-X)

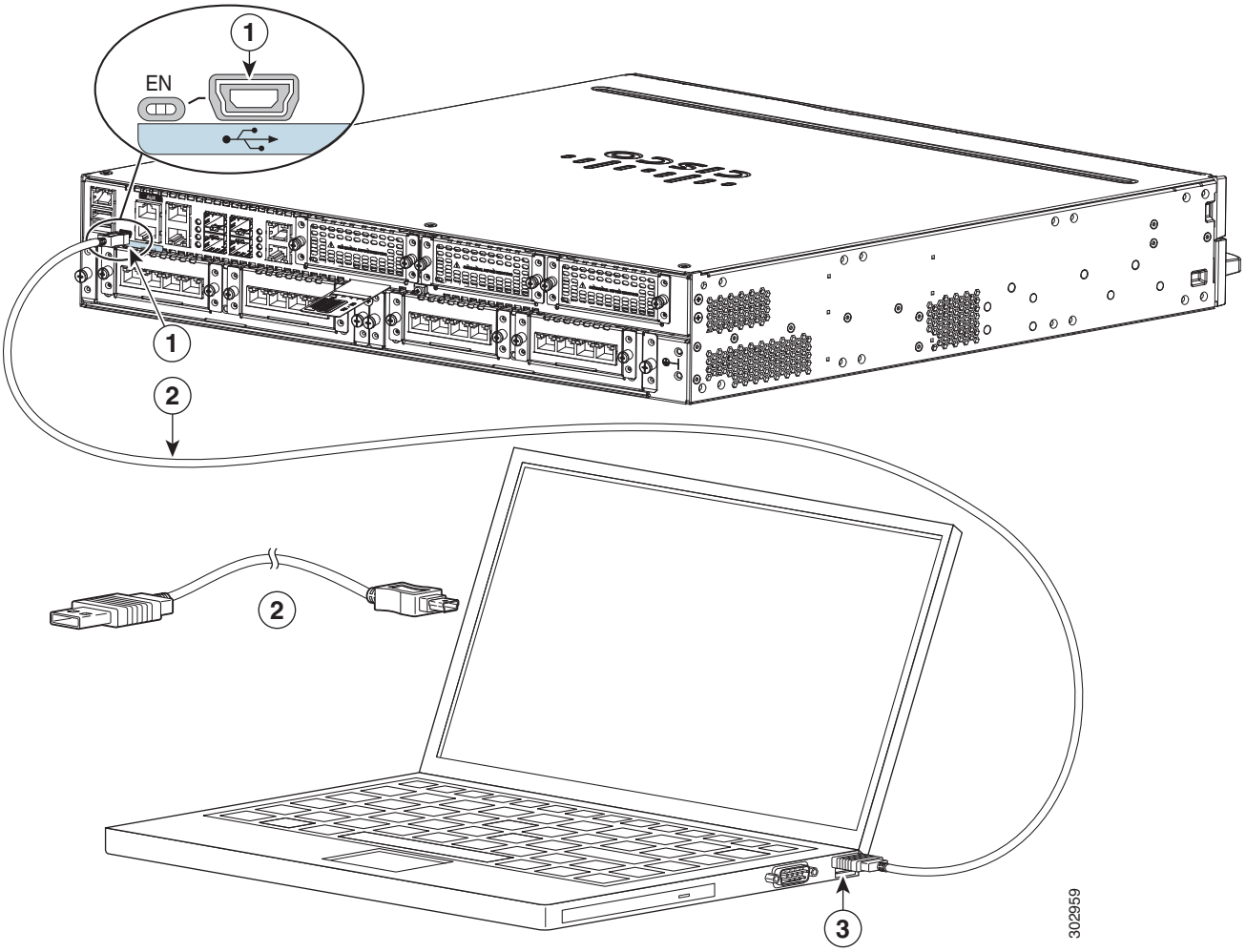

1	USB 5-pin mini USB Type-B console port	2	USB 5-pin mini USB Type-B to USB Type-A console cable
3	USB Type-A		

Connect to Console Port with Mac OS X

You connect a Mac OS X system USB port to the console using the built-in OS X Terminal utility.

Step 1 Use the Finder to go to **Applications** > **Utilities** > **Terminal**.

Step 2 Connect the OS X USB port to the router.

Step 3 Enter the following commands to find the OS X USB port number:

```
root:user$ cd /dev
root:user$ ls -ltr /dev/*usb*
crw-rw-rw-  1 root    wheel       9,  66 Apr  1 16:46 tty.usbmodem1a21
DT-macbook:dev user$
```

Step 4 Connect to the USB port with the following command followed by the router USB port speed:

```
macbook:user$ screen /dev/tty.usbmodem1a21 9600
```

To disconnect the OS X USB console from the Terminal window

Enter **Ctrl-a** followed by **Ctrl-**

Connect to Console Port with Linux

You connect a Linux system USB port to the console using the built-in Linux Terminal utility.

Step 1 Open the Linux Terminal window.

Step 2 Connect the Linux USB port to the router.

Step 3 Enter the following commands to find the Linux USB port number:

```
root@usb-suse# cd /dev
root@usb-suse /dev# ls -ltr *ACM*
crw-r--r--    1 root     root     188,   0 Jan 14 18:02 ttyACM0
root@usb-suse /dev#
```

Step 4 Connect to the USB port with the following command followed by the router USB port speed:

```
root@usb-suse /dev# screen /dev/ttyACM0 9600
```

To disconnect the Linux USB console from the Terminal window

Enter **Ctrl-a** followed by **:** then **quit**

Install Cisco Microsoft Windows USB Device Driver

A USB device driver must be installed the first time a Microsoft Windows-based PC is connected to the USB serial port on the router.

This section contains the following topics:

- "Install Cisco Microsoft Windows XP USB Driver"
- "Install Cisco Microsoft Windows 2000 USB Driver"
- "Install Cisco Microsoft Windows Vista USB Driver"

Install Cisco Microsoft Windows XP USB Driver

Before you begin, download the appropriate driver for your router model from the Cisco Software Download site, USB Console Software category:
http://www.cisco.com/cisco/software/navigator.html?mode=prod

Step 1 Unzip the file Cisco_usbconsole_driver_X_X.zip (where X is the revision number).

Step 2 If you are using 32-bit Windows XP, double-click the file setup.exe from the Windows_32 folder; if you are using 64-bit Windows XP, double-click the file setup(x64).exe from the Windows_64 folder.

The Cisco Virtual Com InstallShield Wizard begins.

Step 3 Click **Next**. The Ready to Install the Program window appears,

Step 4 Click **Install**. The InstallShield Wizard Completed window appears.

Step 5 Click **Finish.**

Step 6 Connect the USB cable to the PC and router USB console ports. See Table 3-1. The EN LED for the USB console port turns green, and the Found New Hardware Wizard displays. Follow the instructions in the wizard to complete the installation of the driver.

The USB console is ready for use.

Install Cisco Microsoft Windows 2000 USB Driver

Step 1 Obtain the file Cisco_usbconsole_driver.zip from cisco.com and unzip it.

Step 2 Double-click the file setup.exe. The Cisco Virtual Com InstallShield Wizard begins.

Step 3 Click **Next**. The Ready to Install the Program window appears.

Step 4 Click **Install**. The InstallShield Wizard Completed window appears.

Step 5 Click **Finish.**

Step 6 Connect the USB cable to the PC and router USB console ports. See Table 3-1. The EN LED for the USB console port turns green, and the Found New Hardware Wizard window displays. Follow the instructions in the wizard to complete the installation of the driver.

The USB console is ready for use.

Install Cisco Microsoft Windows Vista USB Driver

Step 1 Obtain the file Cisco_usbconsole_driver.zip from cisco.com and unzip it.

Step 2 If you are using 32-bit Windows Vista, double-click the file setup.exe from the Windows_32 folder; if your are using 64-bit Windows Vista, double-click the file setup(x64).exe from the Windows_64 folder. The Cisco Virtual Com InstallShield Wizard begins.

Step 3 Click **Next**. The Ready to Install the Program window appears,

Step 4 Click **Install**. The InstallShield Wizard Completed window appears.

Note If a User Account Control warning appears, click "Allow - I trust this program..." to proceed.

Step 5 Click **Finish.**

Step 6 Connect the USB cable to the PC and router USB console ports. See Table 3-1. The EN LED for the USB console port turns green, and a pop up window stating "Installing device driver software" appears. Follow subsequent instructions in the wizard to complete the installation of the driver.

The USB console is ready for use.

Install the Silicon Labs USB Device Driver

This section contains the following topics:

- "Install the Silicon Labs Windows USB Driver"
- "Install the Silicon Labs Mac USB Driver"

Install the Silicon Labs Windows USB Driver

Step 1 Go to the Silicon Labs website (www.silabs.com/developers/usb-to-uart-bridge-vcp-drivers?tab=downloads), and click **CP210x Universal Windows Driver**.

Step 2 Unzip the downloaded folder, and select the installer for your system configuration. The Device Driver Installation Wizard begins.

Step 3 Click **Next** on the Installation Wizard, then click **Finish** to complete installation.

Step 4 Open the Device Manager on your system and click the **Ports (COM & LPT)** drop-down.

Step 5 Insert the USB console cable and power into your system. The Device manager refreshes and indicates the newly-detected COM port.

Step 6 Open a terminal emulator and click the **Serial** connection type. Input the values for **Serial Line** and **Speed** (or **Baud Rate**).

Step 7 Click **Open.**

Step 8 The terminal emulator opens. Click **Enter** to view the console output response.

The USB console is ready for use.

Install the Silicon Labs Mac USB Driver

Step 1 Go to the Silicon Labs website (www.silabs.com/developers/usb-to-uart-bridge-vcp-drivers?tab=downloads), and click **CP210x VCP Mac OS Driver**.

Step 2 Click the **Downloads** folder, then click the **macOS_VCP_Driver** folder, and double-click the **SiLabsUSBDriverDisk.dmg** program.

Step 3 Click **Install CP210X VCP Driver,** and then click **Open.** The Driver Installer begins.

Step 4 Follow installer instructions. Click **Continue**, scroll all the way down, then click **Continue**, and click **Agree**.

Step 5 Click **Continue**, and enter your password. Then click **Install Helper**, and click **Close**.

Step 6 Insert the USB console cable and power into your system.

Step 7 Open a terminal and type **cd/dev**, and then type **ls-ltr**. Serial port **tty.SLAB_USBtoUART** appears.

Step 8 Type **screen/dev/tty.SLAB_USBtoUART <baudrate>** to see console output. Console will show response upon first **Enter** key if there is no output.

The USB console is ready for use.

Uninstall Cisco Microsoft Windows USB Driver

To uninstall the Cisco Microsoft Windows USB device driver.

- "Uninstall Cisco Microsoft Windows XP and 2000 USB Driver"
- "Uninstall Cisco Microsoft Windows Vista USB Driver"

Uninstall Cisco Microsoft Windows XP and 2000 USB Driver

This procedure shows you how to uninstall both the Microsoft Windows XP and 2000 USB driver. The driver can be removed using the Windows Add Remove Programs utility or the setup.exe program.

Using the Add Remove Programs utility

Note Disconnect the router console terminal before uninstalling the driver.

Step 1 Click **Start > Control Panel > Add or Remove** Programs.

Step 2 Scroll to Cisco Virtual Com and click **Remove**.

The Program Maintenance window appears,

Step 3 Select the **Remove** radio button. Click **Next**.

Using the Setup.exe program

Note Disconnect the router console terminal before uninstalling the driver.

Step 1 Run the setup.exe for Windows 32-bit or setup(x64).exe for Windows-64bit. Click **Next**. The InstallShield Wizard for Cisco Virtual Com appears.

Step 2 Click **Next**. The Program Maintenance window appears.

Step 3 Select the **Remove** radio button and click **Next**. The Remove the Program window appears,

Step 4 Click **Remove**. The InstallShield Wizard Completed window appears.

Step 5 Click **Finish**.

Uninstall Cisco Microsoft Windows Vista USB Driver

Note Disconnect the router console terminal before uninstalling the driver.

Step 1 Run the setup.exe for Windows 32-bit or setup(x64).exe for Windows-64bit. Click **Next**.

The InstallShield Wizard for Cisco Virtual Com appears.

Step 2 Click **Next** The Program Maintenance window appears.

Step 3 Select the **Remove** radio button and click **Next**. The Remove the Program window appears.

Step 4 Click **Remove**. The InstallShield Wizard Completed window appears.

Note If a User Account Control warning appears, click "Allow - I trust this program..." to proceed.

Step 5 Click **Finish**.

Connect WAN, LAN, and Voice Interfaces

- Ports and Cabling, page 3-31
- Connection Procedures and Precautions, page 3-31

Warning **Do not work on the system or connect or disconnect cables during periods of lightning activity.** Statement 1001

Warning **To avoid electric shock, do not connect safety extra-low voltage (SELV) circuits to telephone-network voltage (TNV) circuits. LAN ports contain SELV circuits, and WAN ports contain TNV circuits. Some LAN and WAN ports both use RJ-45 connectors. Use caution when connecting cables.** Statement 1021

Warning **Hazardous network voltages are present in WAN ports regardless of whether power to the unit is OFF or ON. To avoid electric shock, use caution when working near WAN ports. When detaching cables, detach the end away from the unit first.** Statement 1026

Caution To comply with the Telcordia GR-1089 NEBS standard for electromagnetic compatibility and safety, connect Gigabit Ethernet ports using RJ-45 connectors for shielded twisted pair cable only to intra-building or unexposed wiring or cable. The intra-building cable must be shielded and the shield must be grounded at both ends. The intra-building port(s) of the equipment or subassembly must not be metallically connected to interfaces that connect to the OSP or its wiring. These interfaces are designed for use as intra-building interfaces only (Type 2 or Type 4 ports as described in GR-1089-CORE, Issue 4) and require isolation from the exposed OSP cabling. The addition of Primary Protectors is not sufficient protection in order to connect these interfaces metallically to OSP wiring.

Warning **Never install telephone jacks in wet locations unless the jack is specifically designed for wet locations.** Statement 1036

Warning **Never touch uninsulated telephone wires or terminals unless the telephone line has been disconnected at the network interface.** Statement 1037

Ports and Cabling

Table 3-2 summarizes typical WAN, LAN, and voice connections for routers. The connections summarized here are also described in detail in *Cisco Modular Access Router Cable Specifications.*

Table 3-2 WAN, LAN, and Voice Connections

Port or Connection	Port Type, Color[1]	Connection:	Cable
Ethernet	RJ-45, yellow	Ethernet hub or Ethernet switch	Category 5 or higher Ethernet
T1/E1 WAN xCE1T1-PRI	RJ-48C/CA81A RJ-48S, tan	T1 or E1 network External T1 CSU or other T1 equipment	RJ-48 T1/E1 RJ-48S to RJ-48S TE RJ-48S to RJ-48S NT RJ-48S to RJ-48S T1 RJ-48S to bare RJ-48S to BNC RJ-48S to twinaxial cable RJ-48S to DB-15 RJ-48S to DB-15 null
T3/DS3/E3 WAN	BNC connector	T3 network, CSU/DSU, or other T3/DS3 equipment	75-ohm coaxial cable
Cisco serial	60-pin D-sub, blue	CSU/DSU and serial network or equipment	Cisco serial transition cable that matches the signaling protocol (EIA/TIA-232, EIA/TIA-449, V.35, X.21, or EIA-530) and the serial port operating mode (DTE or DCE).
Cisco Smart serial	Cisco Smart compact connector, blue	CSU/DSU and serial network or equipment	
T1/E1 digital voice	RJ-48C/CA81A, tan	Digital PBX, ISDN network, CSU/DSU	RJ-48 T1/E1
Gigabit Ethernet SFP, optical	LC, color according to optical wavelength	1000BASE-SX, -LX, -LH, -ZX, -CWDM	Optical fiber as specified on applicable data sheet
Gigabit Ethernet SFP, copper	RJ-45	1000BASE-T	Category 5, 5e, 6 UTP

1. Cable color codes are specific to Cisco cables.

Connection Procedures and Precautions

- Connect each WAN, LAN, and voice cable to the appropriate connector on the chassis or on a network module or interface card.
- Position the cables carefully, so that they do not put strain on the connectors.
- Organize cables in bundles so that cables do not intertwine.
- Inspect the cables to make sure that the routing and bend radius is satisfactory. Reposition cables, if necessary.
- Install cable ties in accordance with site requirements.

For cable pinouts, see *Cisco Modular Access Router Cable Specifications*.



Configure Initial Router Settings on Cisco 4000 Series ISRs

This chapter describes how to perform the initial configuration on Cisco 4000 Series Integrated Services Routers (ISRs). It contains the following sections:

- Perform Initial Configuration on Cisco 4000 Series ISRs, page 4-1
  - Use Cisco Setup Command Facility, page 4-1
  - Use Cisco IOS XE CLI—Manual Configuration, page 4-5
- Verify Initial Configuration on Cisco 4000 Series ISRs, page 4-23

Perform Initial Configuration on Cisco 4000 Series ISRs

You can perform initial configuration on Cisco 4000 Series ISRs by using either the setup command facility or the Cisco IOS command-line interface (CLI).

- Use Cisco Setup Command Facility
- Use Cisco IOS XE CLI—Manual Configuration

Use Cisco Setup Command Facility

The setup command facility prompts you to enter the information about your router and network. The facility steps guides you through the initial configuration, which includes LAN and WAN interfaces. For more general information about the setup command facility, see the following document:

Cisco IOS Configuration Fundamentals Configuration Guide, Release 12.4, Part 2: Cisco IOS User Interfaces: Using AutoInstall and Setup:
http://www.cisco.com/c/en/us/support/ios-nx-os-software/ios-xe-3s/products-installation-and-configuration-guides-list.html.

This section explains how to configure a hostname for the router, set passwords, and configure an interface to communicate with the management network.

Note The messages that are displayed will vary based on your router model, the installed interface modules, and the software image. The following example and the user entries (in **bold**) are shown only as examples.

Note If you make a mistake while using the setup command facility, you can exit and run the setup command facility again. Press **Ctrl-C**, and enter the **setup** command in privileged EXEC mode (`Router#`)

To configure the initial router settings by using the setup command facility, follow these steps:

Step 1 From the Cisco IOS-XE CLI, enter the **setup** command in privileged EXEC mode:

```
Router> enable
Password: <password>
Router# setup

         --- System Configuration Dialog ---
Continue with configuration dialog? [yes/no]:
```

You are now in the Setup Configuration Utility.

Depending on your router model, the installed interface modules, and the software image, the prompts in the setup command facility vary. The following steps and the user entries (in bold) are shown only as examples.

Note This setup command facility is also entered automatically if there is no configuration on the router when it is booted into Cisco IOS-XE.

Note If you make a mistake while using the setup command facility, you can exit and run the setup command facility again. Press **Ctrl-C**, and enter the **setup** command at the privileged EXEC mode prompt (Router#). For more information on using the setup command facility, see *The Setup Command* chapter in *Cisco IOS Configuration Fundamentals Command Reference*, Release 12.2T, at the following URL: http://www.cisco.com/en/US/docs/ios/12_2t/fun/command/reference/122tfr.html

Step 2 To proceed using the setup command facility, enter **yes**.

```
Continue with configuration dialog? [yes/no]:

At any point you may enter a question mark '?' for help.

Use ctrl-c to abort configuration dialog at any prompt.
Default settings are in square brackets '[]'.
```

Step 3 To enter the basic management setup, enter **yes**.

```
Would you like to enter basic management setup? [yes/no]: yes
```

Step 4 Enter a hostname for the router (this example uses ‘myrouter’):

```
Configuring global parameters:
Enter host name [Router]: myrouter
```

Step 5 Enter an enable secret password. This password is encrypted (for more security) and cannot be seen when viewing the configuration.

```
The enable secret is a password used to protect access to
privileged EXEC and configuration modes. This password, after
entered, becomes encrypted in the configuration.
Enter enable secret: cisco
```

Step 6 Enter an enable password that is different from the enable secret password. This password is *not* encrypted (and is less secure) and can be seen when viewing the configuration.

```
The enable password is used when you do not specify an
enable secret password, with some older software versions, and
some boot images.
Enter enable password: cisco123
```

Step 7 Enter the virtual terminal password, which prevents unauthenticated access to the router through ports other than the console port:

```
The virtual terminal password is used to protect
access to the router over a network interface.
Enter virtual terminal password: cisco
```

Step 8 Respond to the following prompts as appropriate for your network:

```
Configure SNMP Network Management? [no]: yes
    Community string [public]:
```

A summary of the available interfaces is displayed.

Note The interface summary includes interface numbering, which is dependent on the router model and the installed modules and interface cards.

```
Current interface summary

Interface          IP-Address      OK? Method Status                Protocol
GigabitEthernet0/0/0 unassigned      YES NVRAM  administratively down down
GigabitEthernet0/1/0 10.10.10.12     YES DHCP   up                    up
GigabitEthernet0/2/0 unassigned      YES NVRAM  administratively down down
SSLVPN-VIF0                unassigned      NO  unset  up

Any interface listed with OK? value "NO" does not have a valid configuration
```

Step 9 Respond to the following prompts as appropriate for your network:

```
Configuring interface GigabitEthernet0/1/0:
  Configure IP on this interface? [yes]: yes
    IP address for this interface [10.10.10.12]:
    Subnet mask for this interface [255.0.0.0] : 255.255.255.0
    Class A network is 10.0.0.0, 24 subnet bits; mask is /24
```

The following configuration command script was created:

```
hostname myrouter
enable secret 5 $1$t/Dj$yAeGKviLLZNOBX0b9eifO0 enable password cisco123 line vty 0 4
password cisco snmp-server community public !
no ip routing

!
interface GigabitEthernet0/0/0
shutdown
no ip address
!
interface GigabitEthernet0/1/0
no shutdown
ip address 10.10.10.12 255.255.255.0
!
interface GigabitEthernet0/2/0
shutdown
```

```
no ip address
!
end
```

Step 10 Respond to the following prompts. Select [2] to save the initial configuration:

```
[0] Go to the IOS command prompt without saving this config.
[1] Return back to the setup without saving this config.
[2] Save this configuration to nvram and exit.

Enter your selection [2]: 2
Building configuration...
Use the enabled mode 'configure' command to modify this configuration.

Press RETURN to get started! RETURN
```

The user prompt is displayed:

```
myrouter>
```

Complete the Configuration

When using the Cisco Setup, and after you have provided all the information requested by the facility, the final configuration appears. To complete your router configuration, follow these steps:

Step 1 Choose to save the configuration when the facility prompts you to save the configuration.

- If you answer 'no', the configuration information you entered is *not* saved, and you return to the router enable prompt (`Router#`). Enter **setup** to return to the System Configuration Dialog.
- If you answer 'yes', the configuration is saved, and you are returned to the user EXEC prompt (`Router>`).

```
Use this configuration? {yes/no} : yes
Building configuration...
Use the enabled mode 'configure' command to modify this configuration.


Press RETURN to get started!

%LINK-3-UPDOWN: Interface Ethernet0/0, changed state to up
%LINK-3-UPDOWN: Interface Ethernet0/1, changed state to up
%LINK-3-UPDOWN: Interface Serial0/0/0, changed state to up
%LINK-3-UPDOWN: Interface Serial0/0/1, changed state to down
%LINK-3-UPDOWN: Interface Serial0/2, changed state to down
%LINK-3-UPDOWN: Interface Serial1/0, changed state to up
%LINK-3-UPDOWN: Interface Serial1/1, changed state to down
%LINK-3-UPDOWN: Interface Serial1/2, changed state to down

<Additional messages omitted.>
```

Step 2 When the messages stop appearing on your screen, press **Return** to get the `Router>` prompt.

Step 3 Choose to modify the existing configuration or create another configuration. The `Router>` prompt indicates that you are now at the command-line interface (CLI) and you have just completed a initial router configuration. Nevertheless, this is *not* a complete configuration. At this point, you have two choices:

- Run the setup command facility again, and create another configuration.

```
Router> enable
```

```
Password: password
Router# setup
```

- Modify the existing configuration or configure additional features by using the CLI:

```
Router> enable
Password: password
Router# configure terminal
Router(config)#
```

Use Cisco IOS XE CLI—Manual Configuration

This section describes you how to access the command-line interface (CLI) to perform the initial configuration on the router.

Note To configure the initial router settings by using the Cisco IOS CLI, you must set up a console connection.

If the default configuration file is installed on the router prior to shipping, the system configuration dialog message does not appear, To configure the device, follow these steps:

Step 1 Enter the appropriate answer when the following system message appears on the router.

```
--- System Configuration Dialog ---

At any point you may enter a question mark '?' for help.
Use ctrl-c to abort configuration dialog at any prompt.
Default settings are in square brackets '[]'.

Would you like to enter the initial configuration dialog? [yes/no]: no
```

Step 2 Press **Return** to terminate autoinstall and continue with manual configuration:

```
Would you like to terminate autoinstall? [yes] Return
```

Several messages are displayed, ending with a line similar to the following:

```
...
Copyright (c) 1986-2012 by cisco Systems, Inc.
Compiled <date> <time> by <person>
```

Step 3 Press **Return** to bring up the `Router>` prompt.

```
...
flashfs[4]: Initialization complete.
Router>
```

Step 4 Type **enable** to enter privileged EXEC mode:

```
Router> enable
Router#
```

- Configure Cisco 4000 Series ISR Hostname, page 4-6 (Optional)
- Configure the Enable and Enable Secret Passwords, page 4-7 (Required)

- Configure the Console Idle Privileged EXEC Timeout, page 4-8 (Optional)
- Gigabit Ethernet Management Interface Overview, page 4-10 (Required)
- Specify a Default Route or Gateway of Last Resort, page 4-13 (Required)
- Configure IP Routing and IP Protocols, page 4-13 (Required)
- Configure Virtual Terminal Lines for Remote Console Access, page 4-16 (Required)
- Configure the Auxiliary Line, page 4-18 (Optional)
- Verify Network Connectivity, page 4-19 (Required)
- Save Your Device Configuration, page 4-20 (Required)
- Save Backup Copies of Configuration and System Image, page 4-20 (Optional)

Configure Cisco 4000 Series ISR Hostname

The hostname is used in CLI prompts and default configuration filenames. If you do not configure the router hostname, the router uses the factory-assigned default hostname "Router."

SUMMARY STEPS

1. **enable**
2. **configure terminal**
3. **hostname** *name*
4. Verify that the router prompt displays your new hostname.
5. **end**

DETAILED STEPS

	Command or Action	Purpose
Step 1	**enable** **Example:** `Router> enable`	Enables privileged EXEC mode. • Enter your password if prompted.
Step 2	**configure terminal** **Example:** `Router# configure terminal`	Enters global configuration mode.
Step 3	**hostname** *name* **Example:** `Router(config)# hostname myrouter`	Specifies or modifies the hostname for the network server.

	Command or Action	Purpose
Step 4	Verify that the router prompt displays your new hostname. **Example:** `myrouter(config)#`	—
Step 5	**end** **Example:** `myrouter# end`	(Optional) Returns to privileged EXEC mode.

Configure the Enable and Enable Secret Passwords

To provide an additional layer of security, particularly for passwords that cross the network or are stored on a TFTP server, you can use either the **enable password** command or **enable secret** command. Both commands accomplish the same thing—they allow you to establish an encrypted password that users must enter to access privileged EXEC (enable) mode.

We recommend that you use the **enable secret** command because it uses an improved encryption algorithm. Use the **enable password** command only if you boot an older image of the Cisco IOS XE software.

For more information, see the "Configuring Passwords and Privileges" chapter in the *Cisco IOS Security Configuration Guide*. Also see the *Cisco IOS Password Encryption Facts* tech note and the *Improving Security on Cisco Routers* tech note.

Restrictions

If you configure the **enable secret** command, it takes precedence over the **enable password** command; the two commands cannot be in effect simultaneously.

SUMMARY STEPS

1. **enable**
2. **configure terminal**
3. **enable password** *password*
4. **enable secret** *password*
5. **end**
6. **enable**
7. **end**

DETAILED STEPS

	Command or Action	Purpose
Step 1	**enable** **Example:** `Router> enable`	Enables privileged EXEC mode. • Enter your password if prompted.
Step 2	**configure terminal** **Example:** `Router# configure terminal`	Enters global configuration mode.
Step 3	**enable password** *password* **Example:** `Router(config)# enable password pswd2`	(Optional) Sets a local password to control access to various privilege levels. • We recommend that you perform this step only if you boot an older image of the Cisco IOS-XE software or if you boot older boot ROMs that do not recognize the **enable secret** command.
Step 4	**enable secret** *password* **Example:** `Router(config)# enable secret greentree`	Specifies an additional layer of security over the **enable password** command. • Do not use the same password that you entered in Step 3.
Step 5	**end** **Example:** `Router(config)# end`	Returns to privileged EXEC mode.
Step 6	**enable** **Example:** `Router> enable`	Enables privileged EXEC mode. • Verify that your new enable or enable secret password works.
Step 7	**end** **Example:** `Router(config)# end`	(Optional) Returns to privileged EXEC mode.

Configure the Console Idle Privileged EXEC Timeout

This section describes how to configure the console line's idle privileged EXEC timeout. By default, the privileged EXEC command interpreter waits 10 minutes to detect user input before timing out.

When you configure the console line, you can also set communication parameters, specify autobaud connections, and configure terminal operating parameters for the terminal that you are using. For more information on configuring the console line, see the *Cisco IOS Configuration Fundamentals and Network Management Configuration Guide*. In particular, see the "Configuring Operating Characteristics for Terminals" and "Troubleshooting and Fault Management" chapters.

SUMMARY STEPS

1. **enable**
2. **configure terminal**
3. **line console 0**
4. **exec-timeout** *minutes* [*seconds*]
5. **end**
6. **show running-config**

DETAILED STEPS

	Command or Action	Purpose
Step 1	**enable** **Example:** `Router> enable`	Enables privileged EXEC mode. • Enter your password if prompted.
Step 2	**configure terminal** **Example:** `Router# configure terminal`	Enters global configuration mode.
Step 3	**line console 0** **Example:** `Router(config)# line console 0`	Configures the console line and starts the line configuration command collection mode.
Step 4	**exec-timeout** *minutes* [*seconds*] **Example:** `Router(config-line)# exec-timeout 0 0`	Sets the idle privileged EXEC timeout, which is the interval that the privileged EXEC command interpreter waits until user input is detected. • The example shows how to specify no timeout. Setting the exec-timeout value to 0 will cause the router to never log out after it is logged in. This could have security implications if you leave the console without manually logging out using the disable command.
Step 5	**end** **Example:** `Router(config)# end`	Returns to privileged EXEC mode.
Step 6	**show running-config** **Example:** `Router(config)# show running-config`	Displays the running configuration file. • Verify that you properly configured the idle privileged EXEC timeout.

Examples

The following example shows how to set the console idle privileged EXEC timeout to 2 minutes 30 seconds:

```
line console
 exec-timeout 2 30
```

The following example shows how to set the console idle privileged EXEC timeout to 30 seconds:

```
line console
 exec-timeout 0 30
```

Gigabit Ethernet Management Interface Overview

The router provides an Ethernet management port named GigabitEthernet0.

The purpose of this interface is to allow users to perform management tasks on the router. It is an interface that should not and often cannot forward network traffic. It ca, however, be used to access the router through Telnet and SSH to perform management tasks on the router. The interface is most useful before a router begins routing, or in troubleshooting scenarios when other forwarding interfaces are inactive.

Note he following aspects of the management ethernet interface:

- The router has one management ethernet interface named GigabitEthernet0.
- IPv4, IPv6, and ARP are the only routed protocols supported for the interface.
- The interface provides a way to access to the router even if forwarding interfaces are not functional, or the IOS process is down.
- The management ethernet interface is part of its own VRF. See the "Management Ethernet Interface VRF" section in the *Software Configuration Guide for Cisco 4000 Series ISRs* for more details.

Default Gigabit Ethernet Configuration

By default, a forwarding VRF is configured for the interface with a special group named "Mgmt-intf." This cannot be changed. This isolates the traffic on the management interface away from the forwarding plane. The basic configuration is like other interfaces; however, there are many forwarding features that are not supported on these interfaces. No forwarding features can be configured on the GigabitEthernet0 interface as it is only used for management.

For example, the default configuration is as follows:

```
interface GigabitEthernet0
vrf forwarding Mgmt-intf
ip address 172.18.77.212 255.255.255.240
negotiation auto
```

Gigabit Ethernet Port Numbering

The Gigabit Ethernet Management port is always GigabitEthernet0.

The port can be accessed in configuration mode.

```
Router# config t
Enter configuration commands, one per line.  End with CNTL/Z.
Router(config)#interface gigabitethernet0
Router(config-if)#
```

Configure Gigabit Ethernet Interfaces

This sections shows how to assign an IP address and interface description to an Ethernet interface on your router.

For comprehensive configuration information on Gigabit Ethernet interfaces, see the "Configuring LAN Interfaces" chapter of *Cisco IOS Interface and Hardware Component Configuration Guide*, http://www.cisco.com/en/US/docs/ios/12_2/interface/configuration/guide/icflanin.html

For information on interface numbering, see the software configuration guide for your router.

SUMMARY STEPS

1. **enable**
2. **show ip interface brief**
3. **configure terminal**
4. **interface** {**fastethernet** | **gigabitethernet**} **0/0/***port*
5. **description** *string*
6. **ip address** *ip-address mask*
7. **no shutdown**
8. **end**
9. **show ip interface brief**

DETAILED STEPS

	Command or Action	Purpose
Step 1	**enable** **Example:** `Router> enable`	Enables privileged EXEC mode. • Enter your password if prompted.
Step 2	**show ip interface brief** **Example:** `Router# show ip interface brief`	Displays a brief status of the interfaces that are configured for IP. • Learn which type of Ethernet interface is on your router.
Step 3	**configure terminal** **Example:** `Router# configure terminal`	Enters global configuration mode.
Step 4	**interface** {**fastethernet** | **gigabitethernet**} **0/***port* **Example:** `Router(config)# interface gigabitethernet 0/0/0`	Specifies the Ethernet interface and enters interface configuration mode. **Note** For information on interface numbering, see Slots, Subslots (Bay), Ports, and Interfaces in Cisco 4000 Series ISRs, page 1-44.

	Command or Action	Purpose
Step 5	**description** *string* **Example:** `Router(config-if)# description GE int to 2nd floor south wing`	(Optional) Adds a description to an interface configuration. The description helps you remember what is attached to this interface. The description can be useful for troubleshooting.
Step 6	**ip address** *ip-address mask* **Example:** `Router(config-if)# ip address 172.16.74.3 255.255.255.0`	Sets a primary IP address for an interface.
Step 7	**no shutdown** **Example:** `Router(config-if)# no shutdown`	Enables an interface.
Step 8	**end** **Example:** `Router(config)# end`	Returns to privileged EXEC mode.
Step 9	**show ip interface brief** **Example:** `Router# show ip interface brief`	Displays a brief status of the interfaces that are configured for IP. Verify that the Ethernet interfaces are up and configured correctly.

Configuration Examples

Configuring the GigabitEthernet Interface: Example

```
!
interface GigabitEthernet0/0/0
 description GE int to HR group
 ip address 172.16.3.3 255.255.255.0
 duplex auto
 speed auto
 no shutdown
!
```

Sample Output for the show ip interface brief Command

```
Router#show ip interface brief
Interface              IP-Address      OK? Method Status                Protocol
GigabitEthernet0/0/0   unassigned      YES NVRAM  administratively down down
GigabitEthernet0/0/1   unassigned      YES NVRAM  administratively down down
GigabitEthernet0/0/2   unassigned      YES NVRAM  administratively down down
GigabitEthernet0/0/3   unassigned      YES NVRAM  administratively down down
GigabitEthernet0       10.0.0.1        YES manual up                    up
```

Specify a Default Route or Gateway of Last Resort

This section describes how to specify a default route with IP routing enabled. For alternative methods of specifying a default route, see the *Configuring a Gateway of Last Resort Using IP Commands* Technical Specifications Note.

The Cisco IOS-XE software uses the gateway (router) as a last resort if it does not have a better route for a packet and if the destination is not a connected network. This section describes how to select a network as a default route (a candidate route for computing the gateway of last resort). The way in which routing protocols propagate the default route information varies for each protocol.

Configure IP Routing and IP Protocols

For comprehensive configuration information about IP routing and IP routing protocols, see the *Configuring IP Routing Protocol-Independent Feature* at cisco.com.

IP Routing

IP routing is automatically enabled in the Cisco ISO- XE software. When IP routing is configured, the system will use a configured or learned route to forward packets, including a configured default route.

Note This task section does not apply when IP routing is disabled. To specify a default route when IP routing is disabled, refer to the *Configuring a Gateway of Last Resort Using IP Commands* Technical Specifications Note at cisco.com.

Default Routes

A router might not be able to determine the routes to all other networks. To provide complete routing capability, the common practice is to use some routers as smart routers and give the remaining routers default routes to the smart router. (Smart routers have routing table information for the entire internetwork.) These default routes can be passed along dynamically, or can be configured into the individual routers.

Most dynamic interior routing protocols include a mechanism for causing a smart router to generate dynamic default information that is then passed along to other routers.

Default Network

If a router has an interface that is directly connected to the specified default network, the dynamic routing protocols running on the router generates or sources a default route. In the case of RIP, the router will advertise the pseudonetwork 0.0.0.0. In the case of IGRP, the network itself is advertised and flagged as an exterior route.

A router that is generating the default for a network may also need a default of its own. One way a router can generate its own default is to specify a static route to the network 0.0.0.0 through the appropriate device.

Gateway of Last Resort

When default information is being passed along through a dynamic routing protocol, no further configuration is required. The system periodically scans its routing table to choose the optimal default network as its default route. In the case of RIP, there is only one choice, network 0.0.0.0. In the case of IGRP, there might be several networks that can be candidates for the system default. The Cisco IOS-XE software uses both administrative distance and metric information to determine the default route (gateway of last resort). The selected default route appears in the gateway of last resort display of the **show ip route** EXEC command.

If dynamic default information is not being passed to the software, candidates for the default route are specified with the **ip default-network** global configuration command. In this usage, the **ip default-network** command takes an unconnected network as an argument. If this network appears in the routing table from any source (dynamic or static), it is flagged as a candidate default route and is a possible choice for the default route.

If the router has no interface on the default network, but does have a route to it, it considers this network as a candidate default path. The route candidates are examined and based on administrative distance and metric, the best one is chosen. The gateway to the best default path becomes the gateway of last resort.

SUMMARY STEPS

1. **enable**
2. **configure terminal**
3. **ip route** *dest-prefix mask next-hop-ip-address* [*admin-distance*] [**permanent**]
4. **ip default-network** *network-number*
   or
   ip route *dest-prefix mask next-hop-ip-address*
5. **end**
6. **show ip route**

DETAILED STEPS

	Command or Action	Purpose
Step 1	**enable** **Example:** `Router> enable`	Enables privileged EXEC mode. Enter your password if prompted.
Step 2	**configure terminal** **Example:** `Router# configure terminal`	Enters global configuration mode.
Step 3	**ip routing** **Example:** `Router(config)# ip routing`	Enables IP routing.

	Command or Action	Purpose
Step 4	**ip route** *dest-prefix mask next-hop-ip-address* [*admin-distance*] [**permanent**] **Example:** `Router(config)# ip route 192.168.24.0 255.255.255.0 172.28.99.2`	Establishes a static route.

Step 5	**ip default-network** *network-number*
	or
	ip route *dest-prefix mask next-hop-ip-address*
	
	Example:
	`Router(config)# ip default-network 192.168.24.0`
	
	Example:
	`Router(config)# ip route 0.0.0.0 0.0.0.0 172.28.99.1`
		Selects a network as a candidate route for computing the gateway of last resort.
		Creates a static route to network 0.0.0.0 0.0.0.0 for computing the gateway of last resort.

Step 6	**end** **Example:** `Router(config)# end`	Returns to privileged EXEC mode.
Step 7	**show ip route** **Example:** `Router# show ip route`	Displays the current routing table information. Verify that the gateway of last resort is set.

Configuration Examples

Specifying a Default Route: Example

```
!
ip route 192.168.24.0 255.255.255.0 172.28.99.2
!
ip default-network 192.168.24.0
!
```

Sample Output for the show ip route Command

```
Router# show ip route
Codes: L - local, C - connected, S - static, R - RIP, M - mobile, B - BGP
       D - EIGRP, EX - EIGRP external, O - OSPF, IA - OSPF inter area
       N1 - OSPF NSSA external type 1, N2 - OSPF NSSA external type 2
       E1 - OSPF external type 1, E2 - OSPF external type 2 i - IS-IS, su - IS-IS
       summary, L1 - IS-IS level-1, L2 - IS-IS level-2 ia - IS-IS inter area, * -
       candidate default,
       U - per-user static route o - ODR, P - periodic downloaded static route, H - NHRP,
       l - LISP a - application route + - replicated route, % - next hop override

Gateway of last resort is not set 40.0.0.0/8 is variably subnetted, 2 subnets, 2 masks C
       40.0.0.0/24 is directly connected, Loopback1 L 40.0.0.1/32 is directly connected,
       Loopback1 Router#
```

Configure Virtual Terminal Lines for Remote Console Access

Virtual terminal (vty) lines are used to allow remote access to the router. This section shows you how to configure the virtual terminal lines with a password, so that only authorized users can remotely access the router.

By default, the router has five virtual terminal lines. However, you can create additional virtual terminal lines. See the Cisco IOS XE Dial Technologies Configuration Guide at http://www.cisco.com/en/US/docs/ios/dial/configuration/guide/2_xe/dia_2_xe_book.html.

Line passwords and password encryption is described in the Cisco IOS XE Security Configuration Guide: Secure Connectivity document available at the following URL: http://www.cisco.com/en/US/docs/ios/ios_xe/sec_secure_connectivity/configuration/guide/2_xe/sec_secure_connectivity_xe_book.html. See the Security with Passwords, Privilege Levels, and Login Usernames for CLI Sessions on Networking Devices section. If you want to secure the virtual terminal lines (vty) with an access list, see the Access Control Lists: Overview and Guidelines.

SUMMARY STEPS

1. **enable**
2. **configure terminal**
3. **line vty** *line-number* [*ending-line-number*]
4. **password** *password*
5. **login**
6. **end**
7. **show running-config**
8. From another network device, attempt to open a Telnet session to the router.

DETAILED STEPS

	Command or Action	Purpose
Step 1	**enable** **Example:** `Router> enable`	Enables privileged EXEC mode. Enter your password if prompted.
Step 2	**configure terminal** **Example:** `Router# configure terminal`	Enters global configuration mode.
Step 3	**line vty** *line-number* [*ending-line-number*] **Example:** `Router(config)# line vty 0 4`	Starts the line configuration command collection mode for the virtual terminal lines (vty) for remote console access. • Make sure that you configure all vty lines on your router. **Note** To verify the number of vty lines on your router, use the **line vty ?** command.

	Command or Action	Purpose
Step 4	**password** *password* **Example:** `Router(config-line)# password guessagain`	Specifies a password on a line.
Step 5	**login** **Example:** `Router(config-line)# login`	Enables password checking at login.
Step 6	**end** **Example:** `Router(config-line)# end`	Returns to privileged EXEC mode.
Step 7	**show running-config** **Example:** `Router# show running-config`	Displays the running configuration file. Verify that you bave properly configured the virtual terminal lines for remote access.

Step 8	From another network device, attempt to open a Telnet session to the router.
	
	Example:
	`Router# 172.16.74.3`
	`Password:`
		Verifies that you can remotely access the router and that the virtual terminal line password is correctly configured.

Configuration Examples

The following example shows how to configure virtual terminal lines with a password:

```
!
line vty 0 4
 password guessagain
 login
!
```

What to Do Next

After you configure the vty lines, follow these steps:

- (Optional) To encrypt the virtual terminal line password, see the "Configuring Passwords and Privileges" chapter in the *Cisco IOS Security Configuration Guide*. Also see the *Cisco IOS Password Encryption Facts* tech note.
- (Optional) To secure the VTY lines with an access list, see the "Part 3: Traffic Filtering and Firewalls" in the *Cisco IOS Security Configuration Guide*.

Configure the Auxiliary Line

This section describes how to enter line configuration mode for the auxiliary line. How you configure the auxiliary line depends on your particular implementation of the auxiliary (AUX) port. See the following documents for information on configuring the auxiliary line:

- *Configuring a Modem on the AUX Port for EXEC Dialin Connectivity*, Technical Specifications Note

  http://www.cisco.com/en/US/tech/tk801/tk36/technologies_tech_note09186a0080094bbc.shtml
- *Configuring Dialout Using a Modem on the AUX Port*, sample configuration

  http://www.cisco.com/en/US/tech/tk801/tk36/technologies_configuration_example09186a0080094579.shtml
- *Configuring AUX-to-AUX Port Async Backup with Dialer Watch*, sample configuration

  http://www.cisco.com/en/US/tech/tk801/tk36/technologies_configuration_example09186a0080093d2b.shtml
- *Modem-Router Connection Guide*, Technical Specifications Note

  http://www.cisco.com/en/US/tech/tk801/tk36/technologies_tech_note09186a008009428b.shtml

SUMMARY STEPS

1. **enable**
2. **configure terminal**
3. **line aux 0**
4. See the Technical Specifications Note and sample configurations to configure the line for your particular implementation of the AUX port.

DETAILED STEPS

	Command or Action	Purpose
Step 1	**enable** **Example:** `Router> enable`	Enables privileged EXEC mode. • Enter your password if prompted.
Step 2	**configure terminal** **Example:** `Router# configure terminal`	Enters global configuration mode.
Step 3	**line aux 0** **Example:** `Router(config)# line aux 0`	Starts the line configuration command collection mode for the auxiliary line.
Step 4	See the Technical Specifications Note and sample configurations to configure the line for your particular implementation of the AUX port.	—

Verify Network Connectivity

This section describes how to verify network connectivity for your router.

Prerequisites

- All configuration tasks describe in this chapter must be completed.
- The router must be connected to a properly configured network host.

SUMMARY STEPS

1. **enable**
2. **ping** [*ip-address* | *hostname*]
3. **telnet** {*ip-address* | *hostname*}

DETAILED STEPS

	Command or Action	Purpose
Step 1	**enable** **Example:** `Router> enable`	Enables privileged EXEC mode. Enter your password if prompted.
Step 2	**ping** [*ip-address* | *hostname*] **Example:** `Router# ping 172.16.74.5`	Diagnoses initial network connectivity. To verify connectivity, ping the next hop router or connected host for each configured interface to.
Step 3	**telnet** {*ip-address* | *hostname*} **Example:** `Router# telnet 10.20.30.40`	Logs in to a host that supports Telnet. If you want to test the vty line password, perform this step from a different network device, and use your router's IP address.

Examples

The following display shows sample output for the ping command when you ping the IP address 192.168.7.27:

```
Router# ping

Protocol [ip]:
Target IP address: 192.168.7.27
Repeat count [5]:
Datagram size [100]:
Timeout in seconds [2]:
Extended commands [n]:
Sweep range of sizes [n]:
Type escape sequence to abort.
Sending 5, 100-byte ICMP Echos to 192.168.7.27, timeout is 2 seconds:
!!!!!
Success rate is 100 percent, round-trip min/avg/max = 1/2/4 ms
```

The following display shows sample output for the ping command when you ping the IP hostname donald:

```
Router# ping donald

Type escape sequence to abort.
Sending 5, 100-byte ICMP Echos to 192.168.7.27, timeout is 2 seconds:
!!!!!
Success rate is 100 percent, round-trip min/avg/max = 1/3/4 ms
```

Save Your Device Configuration

This section describes how to avoid losing your configuration at the next system reload or power cycle by saving the running configuration to the startup configuration in NVRAM. The NVRAM provides 256KB of storage on the router.

SUMMARY STEPS

1. **enable**
2. **copy running-config startup-config**

DETAILED STEPS

	Command or Action	Purpose
Step 1	**enable** **Example:** `Router> enable`	Enables privileged EXEC mode. Enter your password if prompted.
Step 2	**copy running-config startup-config** **Example:** `Router# copy running-config startup-config`	Saves the running configuration to the startup configuration.

Save Backup Copies of Configuration and System Image

To aid file recovery and minimize downtime in case of file corruption, we recommend that you save backup copies of the startup configuration file and the Cisco IOS-XE software system image file on a server.

SUMMARY STEPS

1. **enable**
2. **copy nvram:startup-config** {**ftp:** | **rcp:** | **tftp:**}
3. **show bootflash:**
4. **copy {bootflash}:** {**ftp:** | **rcp:** | **tftp:**}

DETAILED STEPS

	Command or Action	Purpose
Step 1	**enable** **Example:** `Router> enable`	Enables privileged EXEC mode. Enter your password if prompted.
Step 2	**copy nvram:startup-config** {**ftp:** | **rcp:** | **tftp:**} **Example:** `Router# copy nvram:startup-config ftp:`	Copies the startup configuration file to a server. The configuration file copy can serve as a backup copy.Enter the destination URL when prompted.
Step 3	**show {bootflash0|bootflash1}:** **Example:** `Router# show {bootflash0|bootflash1}:`	Displays the layout and contents of a flash memory file system. Learn the name of the system image file.
Step 4	**copy {bootflash0|bootflash1}:** {**ftp:** | **rcp:** | **tftp:**} **Example:** `Router# copy {bootflash0|bootflash1}: ftp:`	Copies a file from flash memory to a server. • Copy the system image file to a server to serve as a backup copy. • Enter the filename and destination URL when prompted.

Configuration Examples

Copying the Startup Configuration to a TFTP Server: Example

The following example shows the startup configuration being copied to a TFTP server:

```
Router# copy nvram:startup-config tftp:

Remote host[]? 172.16.101.101

Name of configuration file to write [rtr2-confg]? <cr>
Write file rtr2-confg on host 172.16.101.101?[confirm] <cr>
![OK]
```

Copying from Flash Memory to a TFTP Server: Example

The following example shows the use of the **show {flash0|flash1}:** command in privileged EXEC to learn the name of the system image file and the use of the **copy {flash0|flash1}: tftp:** privileged EXEC command to copy the system image to a TFTP server. The router uses the default username and password.

```
Router#Directory of bootflash:
```

```
11 drwx 16384 Jun 12 2012 17:31:45 +00:00 lost+found 64897 drwx 634880 Sep 6 2012 14:33:26
+00:00 core 340705 drwx 4096 Oct 11 2012 19:28:27 +00:00 .prst_sync 81121 drwx 4096 Jun 12
2012 17:32:39 +00:00 .rollback_timer 12 -rw- 0 Jun 12 2012 17:32:50 +00:00 tracelogs.336
713857 drwx 1347584 Oct 11 2012 20:24:26 +00:00 tracelogs 162241 drwx 4096 Jun 12 2012
17:32:51 +00:00 .installer 48673 drwx 4096 Jul 2 2012 17:14:51 +00:00 vman_fdb 13 -rw-
420654048 Aug 28 2012 15:01:31 +00:00
crankshaft-universalk9.BLD_MCP_DEV_LATEST_20120826_083012.SSA.bin 14 -rw- 727035 Aug 29
2012 21:03:25 +00:00 uut2_2000_ikev1.cfg 15 -rw- 420944032 Aug 29 2012 19:40:28 +00:00
crankshaft-universalk9.BLD_MCP_DEV_LATEST_20120829_033026.SSA.bin 16 -rw- 1528 Aug 30 2012
14:24:38 +00:00 base.cfg 17 -rw- 360900 Aug 31 2012 19:10:02 +00:00 uut2_1000_ikev1.cfg 18
-rw- 421304160 Aug 31 2012 16:34:19 +00:00
crankshaft-universalk9.BLD_MCP_DEV_LATEST_20120821_193221.SSA.bin 19 -rw- 421072064 Aug 31
2012 18:31:57 +00:00 crankshaft-universalk9.BLD_MCP_DEV_LATEST_20120830_110615.SSA.bin 20
-rw- 453652 Sep 1 2012 01:48:15 +00:00 uut2_1000_ikev1_v2.cfg 21 -rw- 16452768 Sep 11 2012
20:36:20 +00:00 upgrade_stage_1_of_1.bin.2012-09-05-Delta 22 -rw- 417375456 Sep 12 2012
20:28:23 +00:00 crankshaft-universalk9.2012-09-12_00.45_cveerapa.SSA.bin 23 -rw- 360879
Oct 8 2012 19:43:36 +00:00 old-config.conf 24 -rw- 390804800 Oct 11 2012 15:34:08 +00:00
_1010t.bin 7451738112 bytes total (4525948928 bytes free)

Router#show bootflash: -#- --length-- ---------date/time--------- path 1 4096 Oct 11 2012
20:22:19 +00:00 /bootflash/ 2 16384 Jun 12 2012 17:31:45 +00:00 /bootflash/lost+found 3
634880 Sep 06 2012 14:33:26 +00:00 /bootflash/core 4 1028176 Sep 06 2012 14:31:17 +00:00
/bootflash/core/UUT2_RP_0_iomd_17360.core.gz 5 1023738 Sep 06 2012 14:31:24 +00:00
/bootflash/core/UUT2_RP_0_iomd_23385.core.gz 6 1023942 Sep 06 2012 14:31:30 +00:00
/bootflash/core/UUT2_RP_0_iomd_24973.core.gz 7 1023757 Sep 06 2012 14:31:37 +00:00
/bootflash/core/UUT2_RP_0_iomd_26241.core.gz 8 1023726 Sep 06 2012 14:31:43 +00:00
/bootflash/core/UUT2_RP_0_iomd_27507.core.gz 9 1023979 Sep 06 2012 14:31:50 +00:00
/bootflash/core/UUT2_RP_0_iomd_28774.core.gz 10 1023680 Sep 06 2012 14:31:56 +00:00
/bootflash/core/UUT2_RP_0_iomd_30045.core.gz 11 1023950 Sep 06 2012 14:32:02 +00:00
/bootflash/core/UUT2_RP_0_iomd_31332.core.gz 12 1023722 Sep 06 2012 14:32:09 +00:00
/bootflash/core/UUT2_RP_0_iomd_5528.core.gz 13 1023852 Sep 06 2012 14:32:15 +00:00
/bootflash/core/UUT2_RP_0_iomd_7950.core.gz 14 1023916 Sep 06 2012 14:32:22 +00:00
/bootflash/core/UUT2_RP_0_iomd_9217.core.gz 15 1023875 Sep 06 2012 14:32:28 +00:00
/bootflash/core/UUT2_RP_0_iomd_10484.core.gz 16 1023907 Sep 06 2012 14:32:35 +00:00
/bootflash/core/UUT2_RP_0_iomd_11766.core.gz 17 1023707 Sep 06 2012 14:32:41 +00:00
/bootflash/core/UUT2_RP_0_iomd_13052.core.gz 18 1023963 Sep 06 2012 14:32:48 +00:00
/bootflash/core/UUT2_RP_0_iomd_14351.core.gz 19 1023915 Sep 06 2012 14:32:54 +00:00
/bootflash/core/UUT2_RP_0_iomd_15644.core.gz 20 1023866 Sep 06 2012 14:33:00 +00:00
/bootflash/core/UUT2_RP_0_iomd_17171.core.gz 21 1023518 Sep 06 2012 14:33:07 +00:00
/bootflash/core/UUT2_RP_0_iomd_18454.core.gz 22 1023938 Sep 06 2012 14:33:13 +00:00
/bootflash/core/UUT2_RP_0_iomd_19741.core.gz 23 1024017 Sep 06 2012 14:33:20 +00:00
/bootflash/core/UUT2_RP_0_iomd_21039.core.gz 24 1023701 Sep 06 2012 14:33:26 +00:00
/bootflash/core/UUT2_RP_0_iomd_22323.core.gz 25 4096 Oct 11 2012 19:28:27 +00:00
/bootflash/.prst_sync 26 4096 Jun 12 2012 17:32:39 +00:00 /bootflash/.rollback_timer 27 0
Jun 12 2012 17:32:50 +00:00 /bootflash/tracelogs.336 28 1347584 Oct 11 2012 20:24:26
+00:00 /bootflash/tracelogs 29 392 Oct 11 2012 20:22:19 +00:00
/bootflash/tracelogs/inst_cleanup_R0-0.log.gz 30 308 Oct 11 2012 18:39:43 +00:00
/bootflash/tracelogs/inst_cleanup_R0-0.log.0000.20121011183943.gz 31 308 Oct 11 2012
18:49:44 +00:00 /bootflash/tracelogs/inst_cleanup_R0-0.log.0000.20121011184944.gz 32 42853
Oct 04 2012 07:35:39 +00:00 /bootflash/tracelogs/hman_R0-0.log.0498.20121004073539.gz 33
307 Oct 11 2012 18:59:45 +00:00
/bootflash/tracelogs/inst_cleanup_R0-0.log.0000.20121011185945.gz 34 308 Oct 11 2012
19:19:47 +00:00 /bootflash/tracelogs/inst_cleanup_R0-0.log.0000.20121011191947.gz 35 307
Oct 11 2012 19:37:14 +00:00
/bootflash/tracelogs/inst_cleanup_R0-0.log.0000.20121011193714.gz 36 308 Oct 11 2012
19:47:15 +00:00 /bootflash/tracelogs/inst_cleanup_R0-0.log.0000.20121011194715.gz 37 308
Oct 11 2012 19:57:16 +00:00
/bootflash/tracelogs/inst_cleanup_R0-0.log.0000.20121011195716.gz 38 308 Oct 11 2012
20:07:17 +00:00 /bootflash/tracelogs/inst_cleanup_R0-0.log.0000.20121011200717.gz 39 307
Oct 11 2012 20:12:18 +00:00
/bootflash/tracelogs/inst_cleanup_R0-0.log.0000.20121011201218.gz 40 306 Oct 11 2012
20:17:18 +00:00 /bootflash/tracelogs/inst_cleanup_R0-0.log.0000.20121011201718.gz 41 44220
Oct 10 2012 11:47:42 +00:00 /bootflash/tracelogs/hman_R0-0.log.32016.20121010114742.gz 42
64241 Oct 09 2012 20:47:59 +00:00
```

```
/bootflash/tracelogs/fman-fp_F0-0.log.12268.20121009204757.gz 43 177 Oct 11 2012 19:27:03
+00:00 /bootflash/tracelogs/inst_compmatrix_R0-0.log.gz 44 307 Oct 11 2012 18:24:41 +00:00
/bootflash/tracelogs/inst_cleanup_R0-0.log.0000.20121011182441.gz 45 309 Oct 11 2012
18:29:42 +00:00 /bootflash/tracelogs/inst_cleanup_R0-0.log.0000.20121011182942.gz 46 43748
Oct 06 2012 13:49:19 +00:00 /bootflash/tracelogs/hman_R0-0.log.0498.20121006134919.gz 47
309 Oct 11 2012 18:44:43 +00:00
/bootflash/tracelogs/inst_cleanup_R0-0.log.0000.20121011184443.gz 48 309 Oct 11 2012
19:04:46 +00:00 /bootflash/tracelogs/inst_cleanup_R0-0.log.0000.20121011190446.gz 49 2729
Oct 09 2012 21:21:49 +00:00 /bootflash/tracelogs/IOSRP_R0-0.log.20011.20121009212149 50
116 Oct 08 2012 21:06:44 +00:00
/bootflash/tracelogs/binos_log_R0-0.log.20013.20121008210644
```

Note To avoid losing work you have completed, be sure to save your configuration occasionally as you proceed. Use the **copy running-config startup-config** command to save the configuration to NVRAM.

Verify Initial Configuration on Cisco 4000 Series ISRs

Enter the following commands at Cisco IOS-XE to verify the initial configuration on the router:

- **show version**—Displays the system hardware version; the installed software version; the names and sources of configuration files; the boot images; and the amount of installed DRAM, NVRAM, and flash memory.
- **show diag**—Lists and displays diagnostic information about the installed controllers, interface processors, and port adapters.
- **show interfaces**— Shows interfaces are operating correctly and that the interfaces and line protocol are in the correct state; either up or down.
- **show ip interface brief—** Displays a summary status of the interfaces configured for IP protocol.
- **show configuration—** Verifies that you have configured the correct hostname and password.
- **show platform—** Displays the software/rommon version, and so on.

When you have completed and verified the initial configuration, specific features and functions are ready to be configured. See the *Software Configuration Guide for the Cisco 4400 and Cisco 4300 Series ISRs.*

ROM Monitor Overview and Basic Procedures

The *ROM Monitor* is a bootstrap program that initializes the hardware and boots the Cisco IOS XE software when you power on or reload a router. When you connect a terminal to the router that is in ROM Monitor mode, the ROM Monitor command-line interface (CLI) prompt is displayed.

During normal operation, users do not use ROM Monitor mode. ROM Monitor mode is used only in special circumstances, such as reinstalling the entire software set, resetting the router password, or specifying a configuration file to use at startup.

The *ROM Monitor software* is known by different names. It is sometimes called *ROMMON* because of the CLI prompt in ROM Monitor mode. It is also called the *boot software*, *boot image*, or *boot helper*. Although it is distributed with the routers that use the Cisco IOS XE software, the ROM Monitor

software is a program that is separate from the Cisco IOS XE software. During normal startup, the ROM Monitor initializes the router, and then control passes to the Cisco IOS XE software. After the Cisco IOS XE software takes over, the ROM Monitor is no longer in use. For more information, see the ROMMON Overview section of the *Upgrading Field-Programmable Hardware Devices for Cisco 4000 Series ISRs*



Install and Upgrade Internal Modules and FRUs

This chapter describes how to install and upgrade internal modules and field replaceable units (FRUs) in Cisco 4000 Series Integrated Services Routers (ISRs). The following sections provide the install and upgrade information:

Internal and External Modules

- Safety Warnings, page 5-2
- Modules Supported, page 5-4
- Access Internal Modules, page 5-4
- Locate Internal and External Slots, page 5-6
- Locate Internal and External Slots for Modules on Cisco 4461 ISR, page 5-7
- Locate Internal and External Slots for Modules on Cisco 4451 ISR, page 5-8
- Locate Internal and External Slots for Modules on Cisco 4351 ISR, page 5-10
- Locate Internal and External Slots for Modules on Cisco 4331 ISR, page 5-11
- Overview of NIM-HDD Card, page 5-21
- Remove and Replace Cisco NIM-SSD or NIM-HDD, page 5-23
- Install and Remove DDR DIMMs on Cisco 4400 or 4300 Series ISRs, page 5-26
- Install and Remove NIMs and SM-Xs on Cisco 4000 Series ISRs, page 5-31
- Install and Remove PVDM4 on Cisco 4400 or 4300 Series ISRs, page 5-33
- Remove and Replace the USB Flash Token Memory Stick, page 5-40
- Remove and Replace Cisco 4000 Series ISRs Power Supplies, page 5-41
- Replace Fan Blower on Cisco 4321 ISR, page 5-67
- Remove and Install the Flash Memory Card, page 5-74
- Install and Remove an SSD mSATA Storage Device, page 5-77
- Remove, Replace, and Install the Internal PoE Daughter Card, page 5-84

FRUs

- Replace a Fan Tray, page 5-62
- Replace Fan Tray on Cisco 4331 ISR, page 5-64
- Replace Fan Blower on Cisco 4321 ISR, page 5-67
- Install and Remove SFP Modules, page 5-80

- Remove and Replace Cisco 4000 Series ISRs Power Supplies, page 5-41

Caution Read the Safety Warnings section and disconnect the power supply before you replace any module.

See the "Modules Supported" section on page 5-4 for instructions on how to install and replace internal components.

Safety Warnings

Warning **Read the installation instructions before connecting the system to the power source.** Statement 1004

Warning **Only trained and qualified personnel should be allowed to install, replace, or service this equipment.** Statement 1030

Warning **This equipment must be installed and maintained by service personnel as defined by AS/NZS 3260. Incorrectly connecting this equipment to a general-purpose outlet could be hazardous. The telecommunications lines must be disconnected 1) before unplugging the main power connector or 2) while the housing is open, or both.** Statement 1043

Warning **Before working on a system that has an on/off switch, turn OFF the power and unplug the power cord.** Statement 1

Warning **This unit might have more than one power supply connection. All connections must be removed to de-energize the unit.** Statement 1028

Warning **This equipment must be grounded. Never defeat the ground conductor or operate the equipment in the absence of a suitably installed ground conductor. Contact the appropriate electrical inspection authority or an electrician if you are uncertain that suitable grounding is available.** Statement 1024

Warning **Hazardous network voltages are present in WAN ports regardless of whether power to the unit is OFF or ON. To avoid electric shock, use caution when working near WAN ports. When detaching cables, detach the end away from the unit first.** Statement 1026

Warning **Before opening the unit, disconnect the telephone-network cables to avoid contact with telephone-network voltages.** Statement 1041



Warning **Before working on equipment that is connected to power lines, remove jewelry (including rings, necklaces, and watches). Metal objects will heat up when connected to power and ground and can cause serious burns or weld the metal object to the terminals.** Statement 43



Warning **Do not use this product near water; for example, near a bath tub, wash bowl, kitchen sink or laundry tub, in a wet basement, or near a swimming pool.** Statement 1035



Warning **Never install telephone jacks in wet locations unless the jack is specifically designed for wet locations.** Statement 1036



Warning **Never touch uninsulated telephone wires or terminals unless the telephone line has been disconnected at the network interface.** Statement 1037



Warning **Avoid using a telephone (other than a cordless type) during an electrical storm. There may be a remote risk of electric shock from lightning.** Statement 1038



Warning **To report a gas leak, do not use a telephone in the vicinity of the leak.** Statement 1039



Warning **There is the danger of explosion if the battery is replaced incorrectly. Replace the battery only with the same or equivalent type recommended by the manufacturer. Dispose of used batteries according to the manufacturer's instructions.** Statement 1015



Warning **Blank faceplates and cover panels serve three important functions: they prevent exposure to hazardous voltages and currents inside the chassis; they contain electromagnetic interference (EMI) that might disrupt other equipment; and they direct the flow of cooling air through the chassis. Do not operate the system unless all cards, faceplates, front covers, and rear covers are in place.** Statement 1029



Warning **For connections outside the building where the equipment is installed, the following ports must be connected through an approved network termination unit with integral circuit protection.**

T1 SFP Statement 1044

Modules Supported

For information about interfaces and modules supported by Cisco 4000 Series ISRs, refer to the Interfaces and Modules matrix.

Access Internal Modules

To access the internal modules on the router, you must first remove the chassis cover. See the Remove and Replace Chassis Cover, page 5-4 for instructions on how to remove and later replace the chassis cover on the routers.

Remove and Replace Chassis Cover

Cisco 4000 Series ISRs have a removable cover. The tasks that you perform for removing and replacing the router cover are based on the specific model of the Cisco 4000 Series ISRs.

See the relevant removing and replacing sub-section for your specific router in the Cisco 4000 Series ISRs:

- Remove Cover from Cisco 4400 or 4200 ISR
- Remove Cover from Cisco 4300 ISR
- Replace Cover on Cisco 4400 or 4200 ISR
- Replace Cover on Cisco 4300 ISR

Caution Do not run the router with the cover off. This can cause the router to overheat quickly.

Warning **Before opening the unit, disconnect the telephone-network cables to avoid contact with telephone-network voltages.** Statement 1041

Note Use a number-2 Phillips screwdriver to perform the following tasks.

Remove Cover from Cisco 4400 or 4200 ISR

To remove the cover:

Step 1 Read the "Safety Warnings" section on page 5-2 and disconnect the power supply before you replace any module.

Step 2 Confirm the router is turned off and disconnected from the power supply or power supplies. If a redundant power is used, disconnect from the redundant power supply.

Step 3 Place the chassis on a flat surface.

Step 4 Remove the three cover screws at the back of the router cover. See Figure 5-1.

Step 5 Lift the cover from the back edge to a 45-degree angle.

Step 6 Pull the cover towards you to disengage the slots along the front (bezel) edge of the chassis. See Figure 5-1.

Remove Cover from Cisco 4300 ISR

To remove the cover:

Step 1 Read the "Safety Warnings" section on page 5-2 and disconnect the power supply before you replace any module.

Step 2 Confirm the router is turned off and disconnected from the power supply or power supplies. If a redundant power is used, disconnect from the redundant power supply.

Step 3 Place the chassis on a flat surface.

Step 4 Remove the four cover screws on the top of the router cover and remove the two cover screws from each side of the router cover. See Figure 5-51

Step 5 Lift the cover from the back edge to a 45-degree angle.

Step 6 Pull the cover towards you to disengage the slots along the front (bezel) edge of the chassis. See Figure 5-1.

Replace Cover on Cisco 4400 or 4200 ISR

To replace the cover:

Step 1 Read the Safety Warnings, page 5-2 and disconnect the power supply before you replace any module.

Step 2 Confirm the router is turned off and disconnected from the power supply or power supplies. If a redundant power is used disconnect from the redundant power supply.

Step 3 Place the chassis on a flat surface.

Step 4 Hold the cover at a 45-degree angle and insert the cover tabs into the slots along the front (bezel) edge of the chassis. See Figure 5-1.

Step 5 Center the cover over the chassis and lower it onto the chassis.

Step 6 Install the three cover screws.

Figure 5-1 Install the Cover on the Router (Shown Cisco 4451-X ISR)

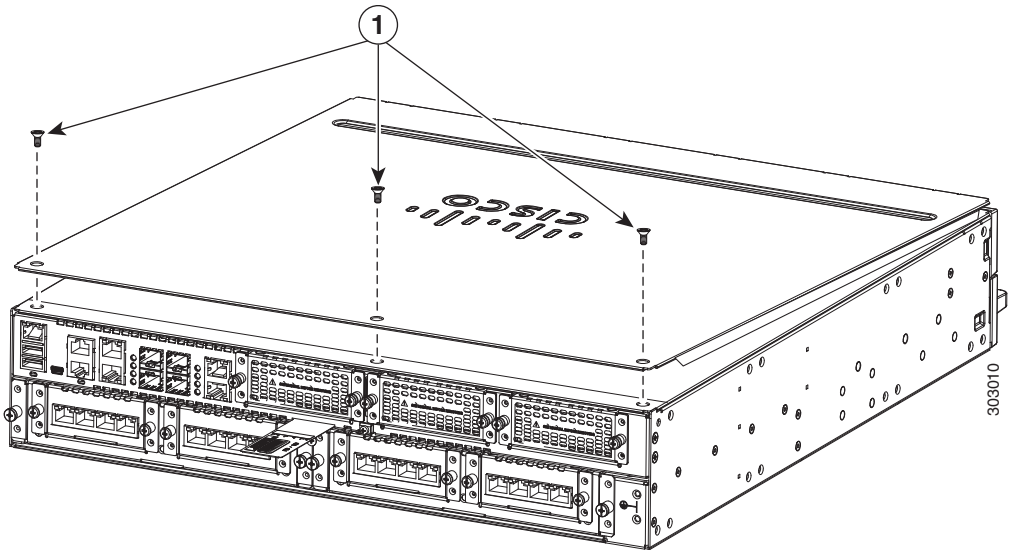

1	Cover screws (3)

Replace Cover on Cisco 4300 ISR

To replace the cover:

Step 1 Read the Safety Warnings, page 5-2 and disconnect the power supply before you replace any module.

Step 2 Confirm the router is turned off and disconnected from the power supply or power supplies. If a redundant power is used disconnect from the redundant power supply.

Step 3 Place the chassis on a flat surface.

Step 4 Hold the cover at a 45-degree angle and insert the cover tabs into the slots along the front (bezel) edge of the chassis. See Figure 5-1.

Step 5 Center the cover over the chassis and lower it onto the chassis.

Step 6 Install the four cover screws on the top of the router and the two cover screws at the side of the router.

Locate Internal and External Slots

Cisco 4400 Series ISRs and Cisco 4300 Series ISRs have replaceable internal modules.

Note Cisco 4200 Series ISR do not have any replaceable internal modules.

See the relevant sub-section to locate internal modules for your specific router in Cisco 4000 Series ISRs:

- Locate Internal and External Slots for Modules on Cisco 4461 ISR
- Locate Internal and External Slots for Modules on Cisco 4451 ISR
- Locate Internal and External Slots for Modules on Cisco 4351 ISR
- Locate Internal and External Slots for Modules on Cisco 4331 ISR
- Locate Internal and External Slots for Modules on Cisco 4331 ISR

Locate Internal and External Slots for Modules on Cisco 4461 ISR

Figure 5-4 shows the locations of internal modules on Cisco 4461 ISR motherboard. Internal modules include DIMMs, PVDM4, and PoE daughter card. Figure 5-27 shows the location of the available slots that includes the Integrated Services Card (ISC) slot.

Figure 5-2 Module Locations in Cisco 4461 ISR

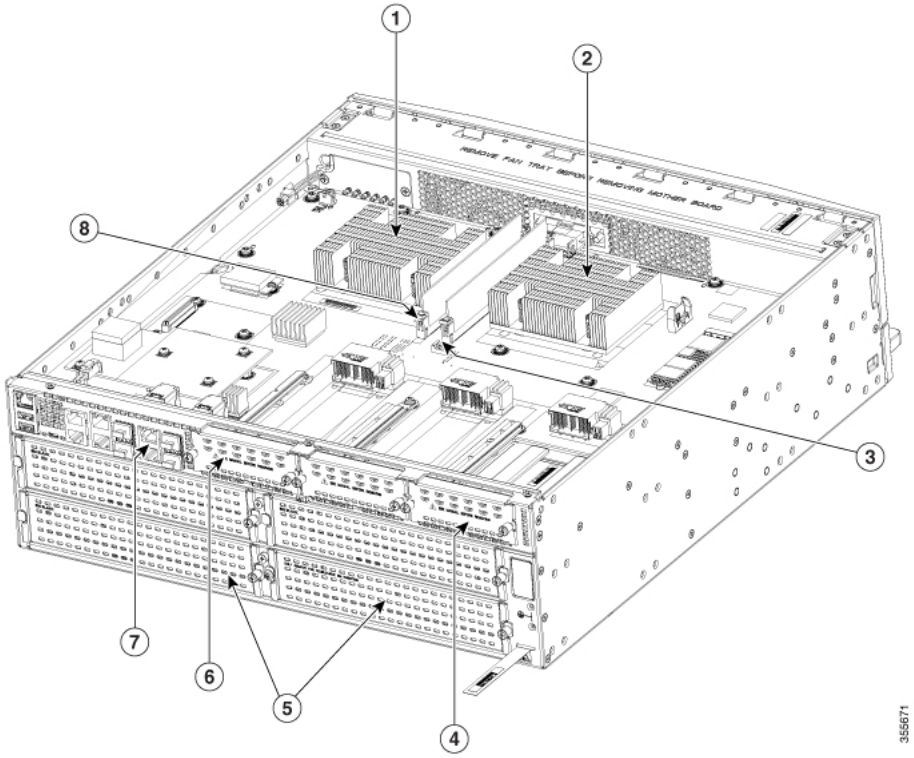

1	Forwarding plane processor	**2**	Control plane processor
3	Control plane processor DIMM	**4**	NIM 3 (single-wide) slot
5	Enhanced Service Module (SM-X) slots	**6**	NIM slot 1 and 2 (shown with slot divider removed)
7	RJ-45 Gigabit Ethernet port (GE 0/0/3)	**8**	Forwarding plane processor DIMM

Locate NEBS Module

Note We recommend that you change the air filter every 3 months. However, examine the air filter once a month (or more often in dusty environments) and replace it if it appears to be excessively dirty or damaged. To comply with Telecordia GR-63-Core standard air filter requirements for NEBS deployment, the air filter must be replaced, not cleaned.

Figure 5-3 shows the NEBS module on Cisco 4461 ISR.

Figure 5-3 NEBS Module Locations in Cisco 4461 ISR

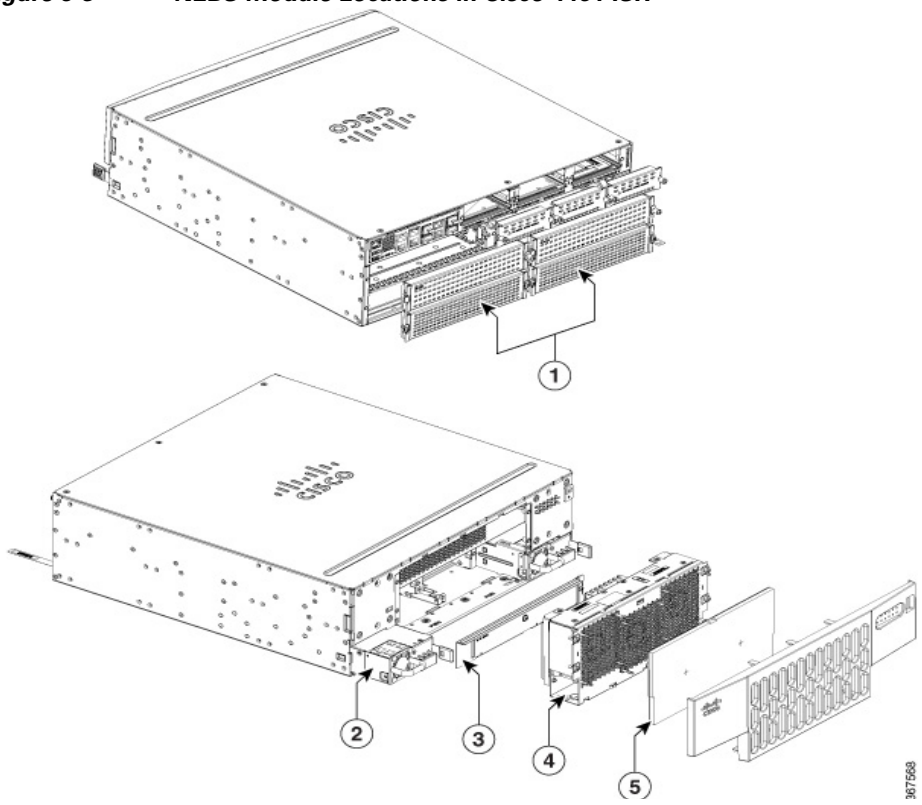

1	SM blank slot for NEBS	**2**	Power supply unit with reverse flow
3	PoE blank slot for NEBS. PoE is not allowed for NEBS.	**4**	NEBS fan tray with reverse flow
5	Air filter for NEBS		

Locate Internal and External Slots for Modules on Cisco 4451 ISR

Figure 5-4 shows the locations of internal modules on Cisco 4451 ISR motherboard. Internal modules include DIMMs, PVDM4, and PoE daughter card. Figure 5-27 shows the location of the available slots that includes the Integrated Services Card (ISC) slot.

Figure 5-4 Module Locations in Cisco 4451-X ISR s

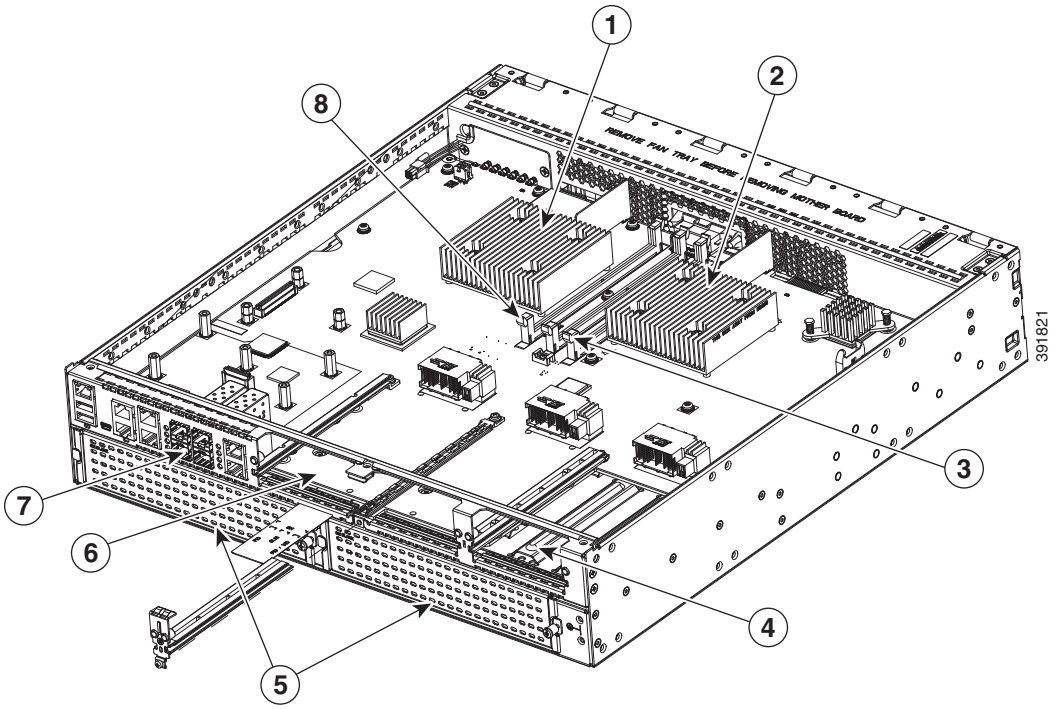

1	Forwarding plane processor	**2**	Control plane processor
3	Control plane processor DIMM	**4**	NIM 3 (single-wide) slot
5	Enhanced Service Module (SM-X) slots	**6**	NIM slot 1 and 2 (shown with slot divider removed)
7	SFP GE ports	**8**	Forwarding plane processor DIMM

Locate Internal and External Slots for Modules on Cisco 4351 ISR

Figure 5-5 shows an internal view of Cisco 4351 ISR chassis indicating the location of internal modules.

Figure 5-5 Module Locations in Cisco 4351 ISR chassis

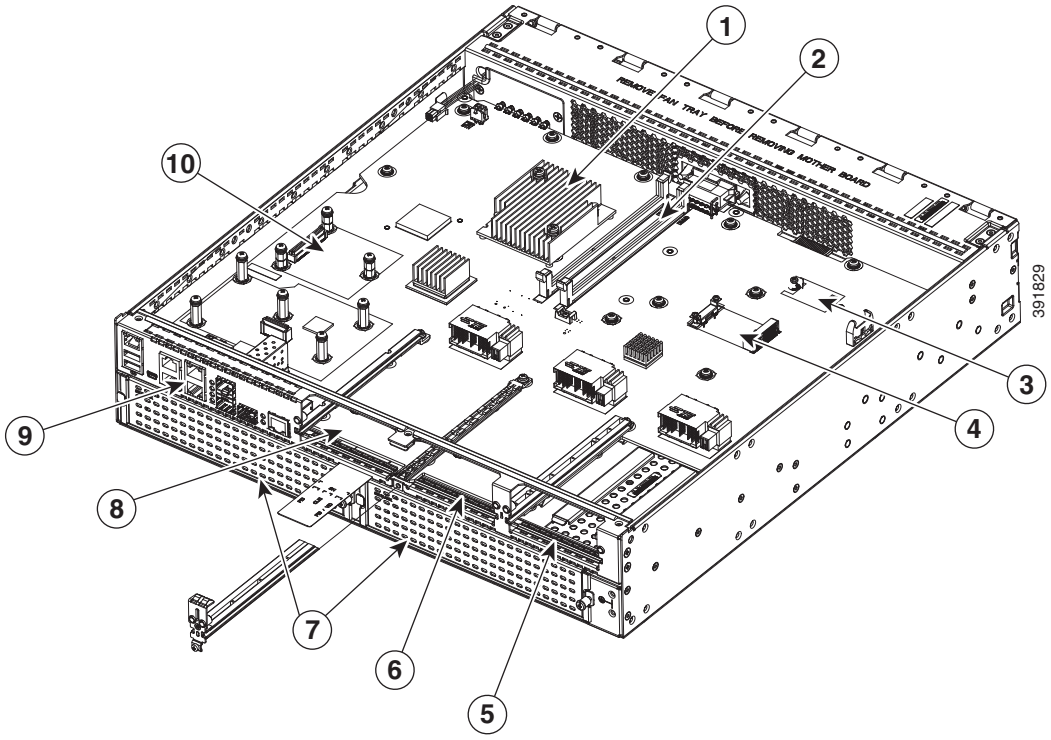

1	CPU	**2**	DIMMs
3	Flash memory card connector	**4**	SSD mSATA connector
5	NIM slot 3	**6**	NIM slot 2
7	SM-X slots	**8**	NIM slot 1
9	RJ-45 GE ports	**10**	ISC slot

Note Cisco ISR 4351 devices can operate with only one DIMM (minimum 4 GB), installed in slot 0. Older ROMMON versions may flash a warning message for both DIMMs to be installed before boot. To override this warning, upgrade to ROMMON 16.7(3r) or higher.

Locate Internal and External Slots for Modules on Cisco 4331 ISR

Figure 5-6 shows locations of internal modules on the Cisco 4331 ISR motherboard. Internal modules include DIMMs, PVDM4, and PoE daughter card . Figure 5-28 shows the location of the available slots that includes the Integrated Services Card (ISC) slot.

Figure 5-6 shows an internal view of Cisco 4331 ISR chassis indicating the location of internal modules.

Figure 5-6 Module Locations in Cisco 4331 ISR chassis

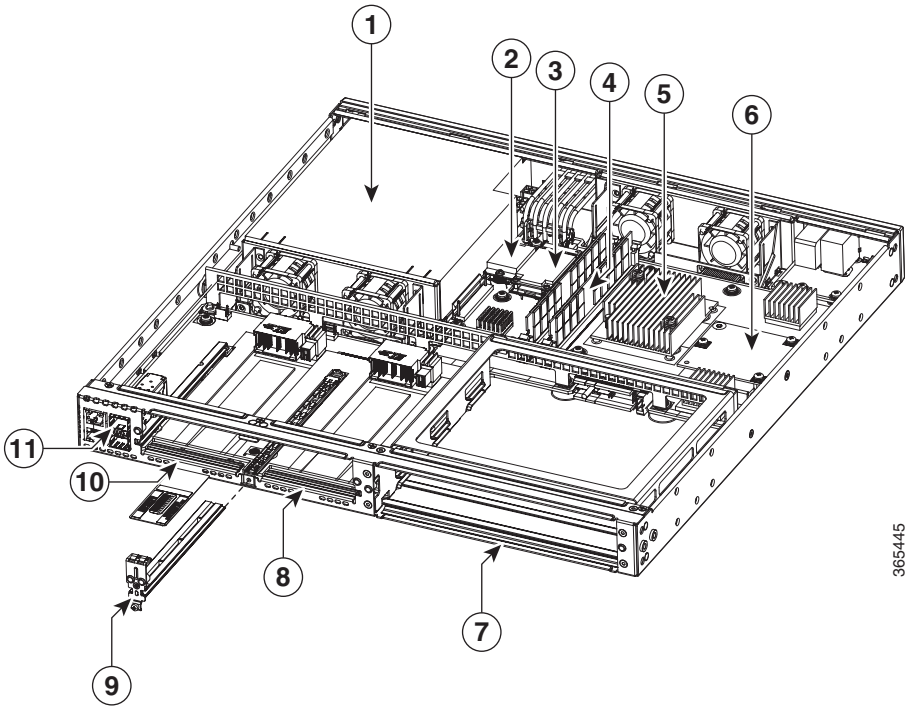

1	Power Supply	**2**	Flash memory card connector
3	SSD mSATA connector	**4**	DIMMs
5	CPU ISC /PVDM-4 slot	**6**	ISC /PVDM-4 slot
7	SM-X Slot[1]	**8**	NIM Slot 2
9	NIM Removable Divider	**10**	NIM Slot 1
11	SFP/RJ45Ports		

1. Gi0/0 may be configured to be either copper or fiber. Gi0/1 is copper/RJ45 and Gi0/2 is Fiber/SFP.

Note Cisco ISR 4331 devices can operate with only one DIMM (minimum 4 GB), installed in slot 0. Older ROMMON versions may flash a warning message for both DIMMs to be installed before boot. To override this warning, upgrade to ROMMON 16.7(3r) or higher.

Overview of the SSD Carrier Card NIM (NIM-SSD)

This section describes the NIM-SSD and how to remove and replace NIM-SSDs. This section contains the following sections:

- Overview
- Solid State Drives
- Install SSD Drives into the NIM Carrier Card
- Remove SSD Drives from the NIM-SSD
- Remove and Replace Cisco NIM-SSD or NIM-HDD
- Install and Remove DDR DIMMs on Cisco 4400 or 4300 Series ISRs

Overview

The solid state drive (SSD) carrier card network interface module (NIM) enables SSD support on the platform NIM slots. It provides flash storage to the platform and supports dual 2.5” (7mm max) SATA SSDs. The carrier card fits into the NIM slots in the router. The router supports only a single SSD Carrier Card NIM.

Note Refer to the “Network Interface Modules” section of the *Software Configuration Guide for Cisco 4000 Series ISRs* for configuration information on the SSD carrier card NIM.

Note When ISR-WAAS is operational, do not perform online insertion or replacement (OIR) of NIM-SSD.

The SSD carrier card NIM (Figure 5-7) has the following features:

- Single-wide NIM form factor
- LEDs for module and driver status
- On board PCIe x1 Gen 2(5G) dual-port SATA controller
- SFF 2.5” SATA2 or SATA3 (7mm or less) SSDs Support
- Supports module online insertion and removal (OIR): You can remove it from a bay and insert it into a bay while the router is running
- NIM-SSD support in any bay in slot 0
- Support for only one NIM-SSD module per router

Figure 5-7 shows the front panel of the SSD NIM.

Figure 5-7 Front Panel of the SSD Carrier Card NIM

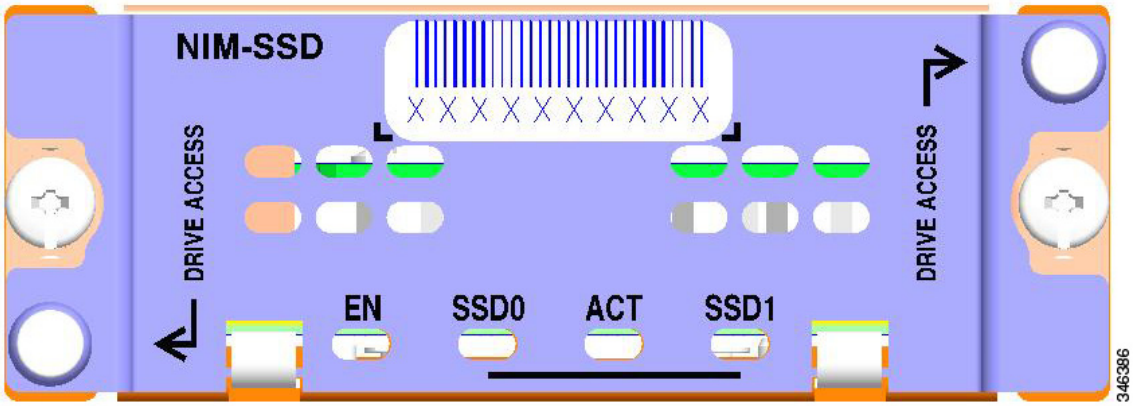

LEDs on NIM-SSD

Table 5-1 describes the LEDs on NIM-SSD shown in Figure 5-7.

Table 5-1 SSD Drive LEDs

LED	Represents	Color	Description
EN	Module power	Green	Module is powered on.
		Off	Module power is off.
SSD0	Solid state drive in slot 0	Green	SSD present.
		Off	No SSD drive in slot 0.
ACT	SSD activity	Green	Activity in the SSD drive.
		Off	No activity.
SSD1	Solid state drive in slot 1	Green	SSD present.
		Off	No SSD in slot 1.

Figure 5-8 shows the rear view of the SSD carrier card NIM, which fits into the router.

Figure 5-8 Rear View of the SSD Carrier Card NIM

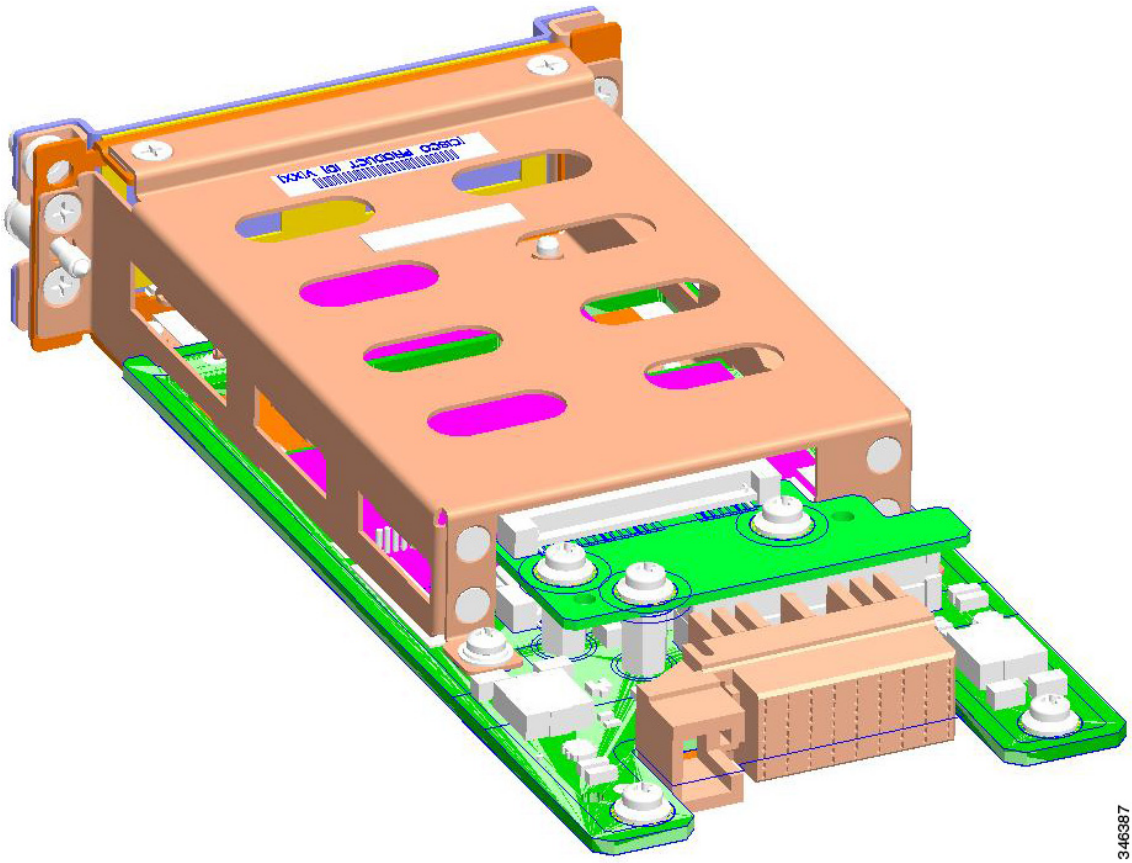

Table 5-2 lists the specifications of the SSD Carrier Card NIM.

Table 5-2 Specifications of the NIM-SSD

Description	Specification
Physical	
Dimensions (H x W x D)	1.5 x 3.5 x 7.5 in (3.8 x 8.9 x 19.1 cm).
Weight	1.0 lbs (0.454 kg)
Power	
Power consumption (maximum)	20W
Environmental	
Operating humidity	10 to 85% operating
Operating altitude maximum	• 104°F (40°C) at sea level • 104°F (40°C) at 6,000 ft (1,800m) **Note** De-rate 2.5°F (1.4°C) per 1,000 ft above 6,000 ft (per 300m above 2,600m)
Transportation and Storage	
Temperature	4 to 149°F (-20 to +65°C)
Relative humidity	5 to 95%
Altitude	15,000 ft (4,600m)

Figure 5-9 shows the top of the SSD carrier card NIM along with the serial number and the label location.

Figure 5-9 Top View of the SSD Carrier Card NIM with Serial Number

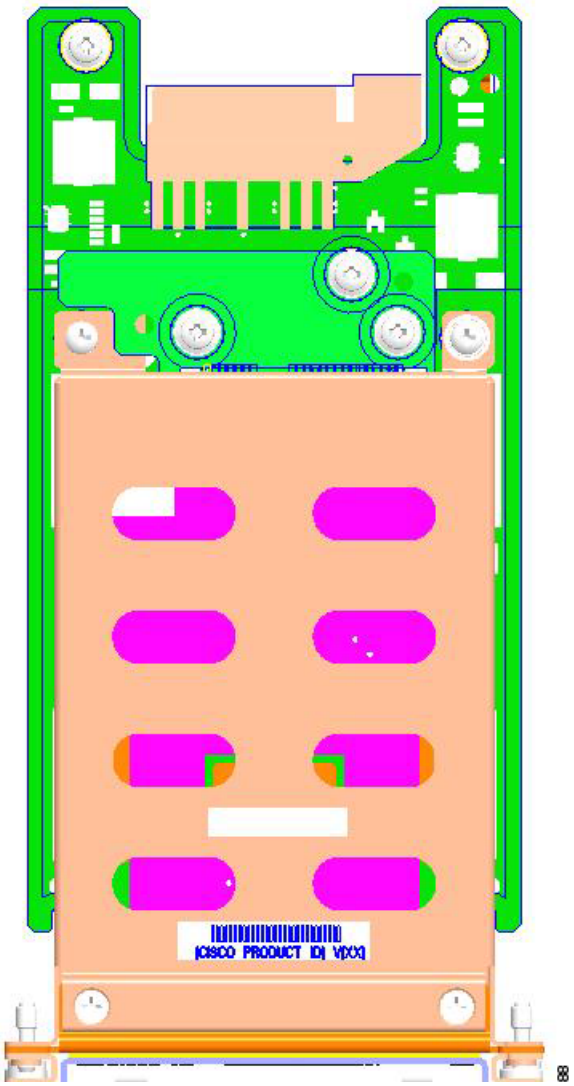

Solid State Drives

The routers contain two solid state drives (SSD) that provide nonvolatile storage in the form of an internal flash disk. On the front panel of the router, the SSD LED indicates activity on the hard drive.

The SSD carrier card NIM can support up to two SFF 2.5” SATA2 or SATA3 (7mm or less) SSDs.

Figure 5-10 shows a top view of the SSD drive that can be inserted into a NIM carrier card. Figure 5-11 shows two SSDs in a NIM carrier card.

Figure 5-10 Solid State Drive



Figure 5-11 NIM-SSD with Two Solid State Drives



Install SSD Drives into the NIM Carrier Card

To insert one or two SSD drives into the carrier NIM:

Note Prior to installing the NIM-SSD card, power off the device using the **hw-module subslot** *slot / subslot* **stop** command in EXEC mode.

Step 1 On the NIM-SSD, loosen the captive screws retaining the SSD card slot cover (Figure 5-12).

Figure 5-12 Opening the SSD Slot Cover

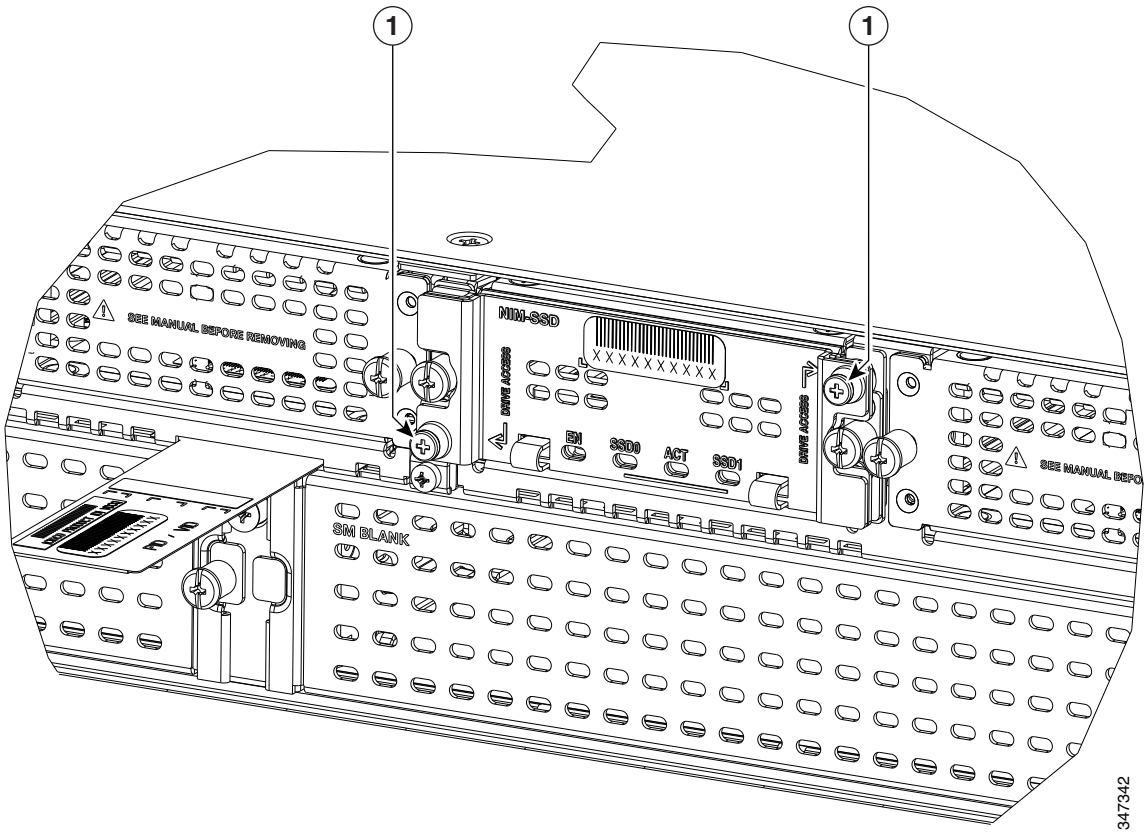

1	Captive screws on the SSD slot cover attaching the SSD Drive to the NIM Carrier Card

Step 2 Rotate the SSD card slot cover down, exposing the slots that hold the SSDs as shown in Figure 5-13.

Figure 5-13 Opening the SSD Slot Cover

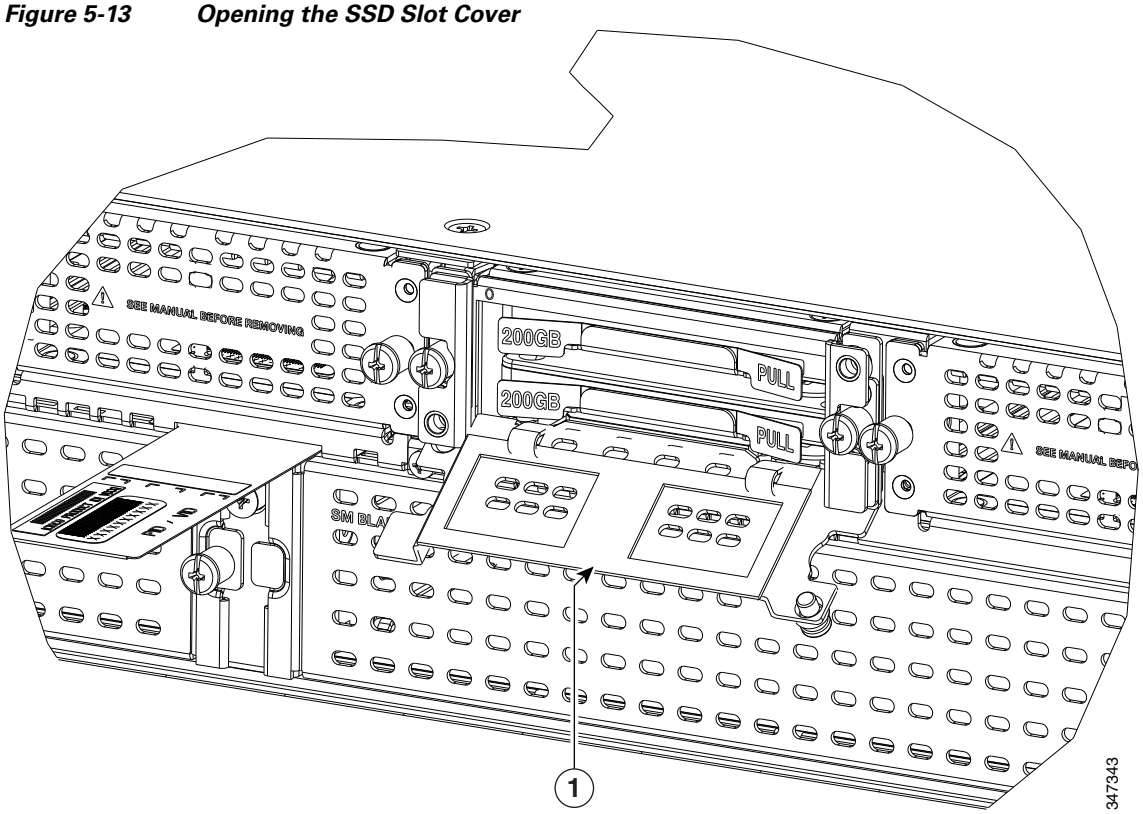

1	Carrier card slot cover

Step 3 Insert an SSD in the lower slot first.

Step 4 Insert the SSD connector end first with the connector side down and serial number facing up (Figure 5-10).

Step 5 A second SSD may be inserted in the upper slot as shown in Figure 5-11.

Step 6 Rotate the SSD card slot cover up and place it over the SSDs.

Step 7 Tighten the captive fasteners on the SSD card slot cover.

Remove SSD Drives from the NIM-SSD

Note Prior to removing the NIM-SSD card, power off the device using the **hw-module subslot** *slot / subslot* **stop** command in EXEC mode.

To remove the SSD cards from the NIM carrier:

Step 1 On the NIM-SSD, loosen the captive screws retaining the NIM-SSD slot cover.

Step 2 Rotate the SSD card slot cover down, exposing the slots that hold the SSDs.

Step 3 To remove the SSD one at a time, pull the two tabs on the front of each SSD as shown in Figure 5-14.

Step 4 Rotate the SSD card slot cover up and place it over the SSDs.

Step 5 Tighten the captive fasteners on the SSD card slot cover.

Figure 5-14 Pulling Out the Solid State Drives

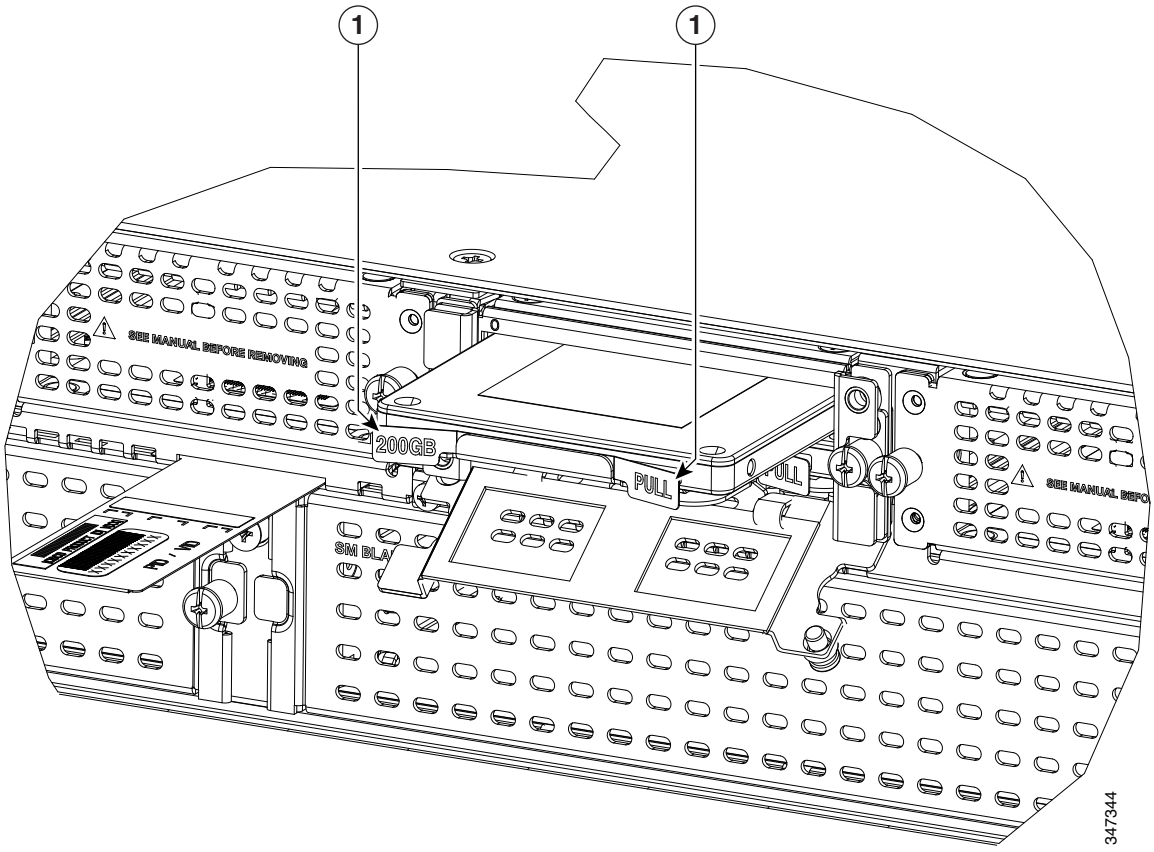

1	Carrier card slot cover

Figure 5-15 Side View of the NIM-SSD

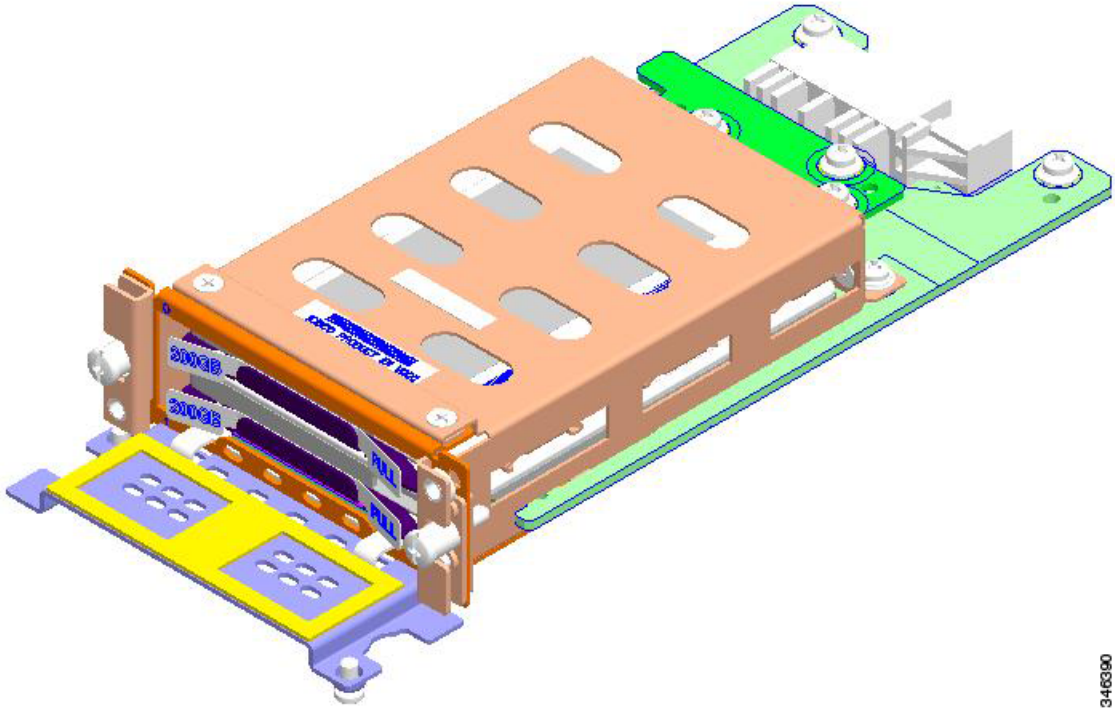

To insert or remove the NIM-SSD into any router NIM slot, see the"Remove and Replace Cisco NIM-SSD or NIM-HDD" section in this chapter.

Overview of NIM-HDD Card

The NIM-HDD is a network interface module that is used to support hard disk drive (HDD) connection for Cisco 4400 Series ISR and Cisco 4300 ISR.

The NIM-HDD module has the following features:

- Provides 1 TB of memory.
- The NIM form-factor supports and houses a single field replaceable 15 mm HDD or two SSDs.
- On-board PCIe dual channel SATA controller enables the NIM-HDD in any NIM slot of the router (Controller Mode)
- Support SATA pass-through mode
- Supports module level OIR operation
- Supports hot plug of SSD/HDDs

Note A drive is removable or insertable while the power is running on the SSD/HDD connector.

- On-board Quack2 for module authentication
- Power and reset
- Firmware upgrade

Note The removal of a drive during active read-write operation is not supported. Ensure that the drive is shut down before you replace the NIM-HDD.

Figure 5-16 shows the HDD card that can be inserted into the NIM chassis shown in Figure 5-17. Figure 5-18 shows the entire Cisco NIM-HDD.

Figure 5-16 HDD Card

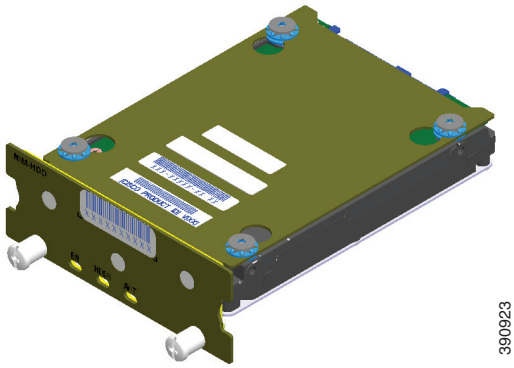

Figure 5-17 NIM Chassis for the HDD

Figure 5-18 HDD in the NIM Chassis

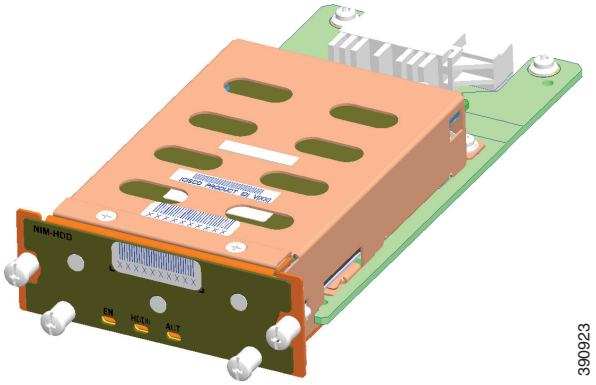

Cisco NIM-HDD LEDs

Table 5-3 shows the LED description for the NIM-HDD.

Table 5-3 LED Description for NIM-HDD

LED	Color	Description
EN (Enabled)	Green	The module is powered on and is functioning correctly.
	Amber	Module has some failure.
	Off	Default when module is powered on for the first time. Persistent until changed by the host software.
HDD0	Green	HDD0 is present.
	Amber	Fault detected on HDD0.
HDD ACT	Green	Activity on HDD0 and HDDI
HDD1	Green	HDD1 is present.
	Amber	Fault detected on HDD1.

Remove and Replace Cisco NIM-SSD or NIM-HDD

This section explains how to remove a NIM-SSD or NIM-HDD from the router chassis and replace it with a new external NIM-SSD or NIM-HDD.

Plugging additional SSD Carrier Card NIMs into a bay powers off the module. Power down the NIM-SSD module and wait for the power LED to turn off before removing the module or removing and replacing new SSD drives.

To deactivate and reactivate a NIM, see the "Deactivating and Reactivating a SSD Carrier Card NIM" section in the *Software Configuration Guide for Cisco 4000 Series ISRs*.

Restrictions

- Cisco SSD Carrier Card NIM with no SSD drives is not supported.
- Dynamically removing and inserting SSD drives on a NIM is not supported.
- Only a single SSD Carrier Card NIM per router is supported on any bay.
- Replacing any SSD drive can cause some data loss.

Warning **During this procedure, wear grounding wrist straps to avoid ESD damage to the card. Do not directly touch the backplane with your hand or any metal tool, or you could shock yourself.** Statement 94

Before you begin, read the following:

- The form-factor internal hard drive is accessible from the front panel of the Cisco 4451-X ISR and supports the online insertion and removal feature (OIR) using the following commands for the standby:
  - **request platform hardware filesystem harddisk: offline**
  - To verify the SSD drive installation, use the **show platform** command. The following sample output from a NIM SSD installed on a 4451-X ISR platform:

```
Router# show platform
Chassis type: ISR4451/K9

Slot      Type                State                 Insert time (ago)
--------- ------------------- --------------------- -----------------
0         ISR4452/K9          ok                    15:57:33
0/0      ISR4451-6X1GE       ok                    15:55:24
0/3       NIM-SSD            ok                    15:55:24
1         ISR4451/K9          ok                    15:57:33
1/0      SM-1T3/E3           ok                    15:55:24
2         ISR4451/K9          ok                    15:57:33
2/0      SM-1T3/E3           ok                    15:55:24
R0        ISR4451/K9          ok, active            15:57:33
F0        ISR4451-FP          ok, active            15:57:33
P0        Unknown             ps, fail              never
P1        XXX-XXXX-XX         ok                    15:56:58
P2        ACS-4450-ASSY       ok                    15:56:58

Slot      CPLD Version        Firmware Version
--------- ------------------- ---------------------------------------
0         12090323            15.3(01r)S            [ciscouser-ISRRO...
1         12090323            15.3(01r)S            [ciscouser-ISRRO...
2         12090323            15.3(01r)S            [ciscouser-ISRRO...
R0        12090323            15.3(01r)S            [ciscouser-ISRRO...
F0        12090323            15.3(01r)S            [ciscouser-ISRRO...
```

- You remove an internal hard drive only when it fails. You can remove the internal drive and recover the data.
- If the drive is in active state, you can back up with the drive plugged into a USB port using the **archive tar** command.

Remove NIM-SSD or NIM-HDD

To remove the module from the router:

Step 1 Slip on the ESD-preventive wrist strap that was included in the accessory kit. Loosen the screw fasteners (11) located on the SSD slots on the right of the input/output (I/O) side of the Cisco 4451-X ISR. (Figure 5-19).

Figure 5-19 Remove the NIM-SSD or NIM-HDD from the Router

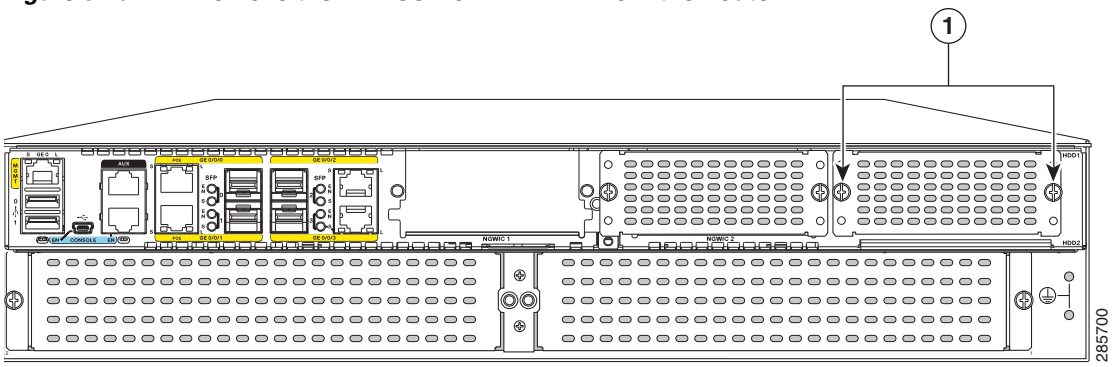

1	Captive screws holding the NIM-SSD to the router

Step 2 Using a Phillips screwdriver, loosen the captive screws on either side as shown in Figure 5-19.

Figure 5-20 Remove the NIM-SSD or NIM-HDD from the Router

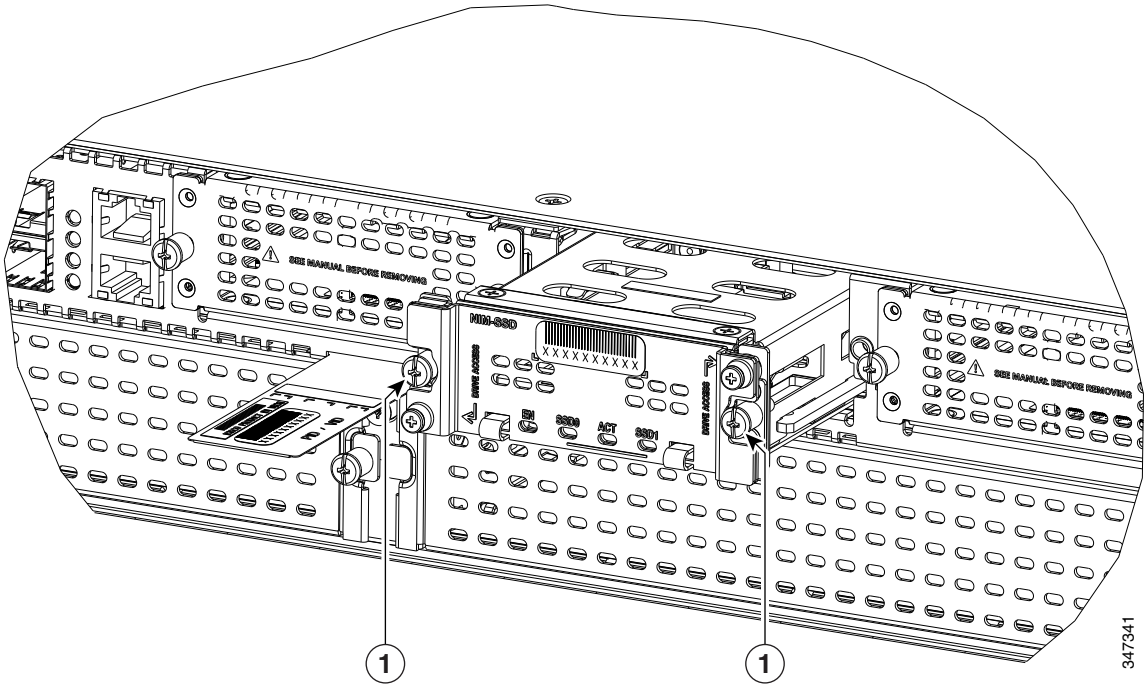

1	Captive screws holding the NIM-SSD to the router

Step 3 Holding the two captive screws, slide the entire NIM unit out as shown in Figure 5-20.

Replace NIM-SSD or NIM-HDD

To replace the NIM-SSD or the NIM-HDD:

Step 1 Align the NIM-SSD carrier card to the router base.

Step 2 Use both hands to slide it back into the slot in the Cisco 4451-X ISR .

Step 3 Tighten the captive screws as shown in Figure 5-20.

Install and Remove DDR DIMMs on Cisco 4400 or 4300 Series ISRs

To access the DIMMs, you must remove the chassis cover as described in the "Remove and Replace Chassis Cover" section on page 5-4.

Caution Always wear an ESD-preventive wrist strap and ensure that it makes good contact with your skin when you remove or install DIMMs. Connect the equipment end of the wrist strap to the metal part of the chassis.

Caution Handle DIMMs by the edges only. DIMMs are ESD-sensitive components and can be damaged by mishandling.

Note When you upgrade to the latest rommon image, the latest model of the Cisco 4451 ISR will support only a single DIMM operation on the device by default.

Locate and Orient DIMM

See the "Locate Internal and External Slots for Modules on Cisco 4451 ISR" section on page 5-8 to find DIMM connectors on the router.

DIMMs have a polarization notch on the mating edge to prevent incorrect insertion. Figure 5-21 shows the polarization notch on a DIMM.

Figure 5-21 DIMM Showing Polarization Notch

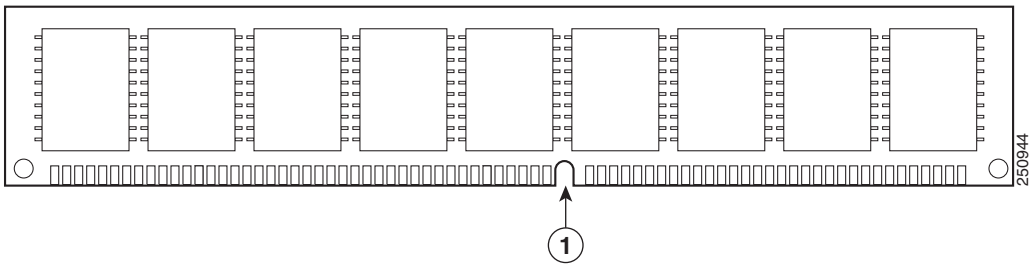

1	Polarization notch

Remove DIMM

To remove a DIMM:

Step 1 Read the "Safety Warnings" section on page 5-2 section and disconnect the power supply before you replace any module.

Step 2 Remove the chassis cover. See the "Remove and Replace Chassis Cover" section on page 5-4.

Step 3 Locate the DIMM module. See the "Locate Internal and External Slots for Modules on Cisco 4451 ISR" section on page 5-8 to find the DIMM sockets on the router.

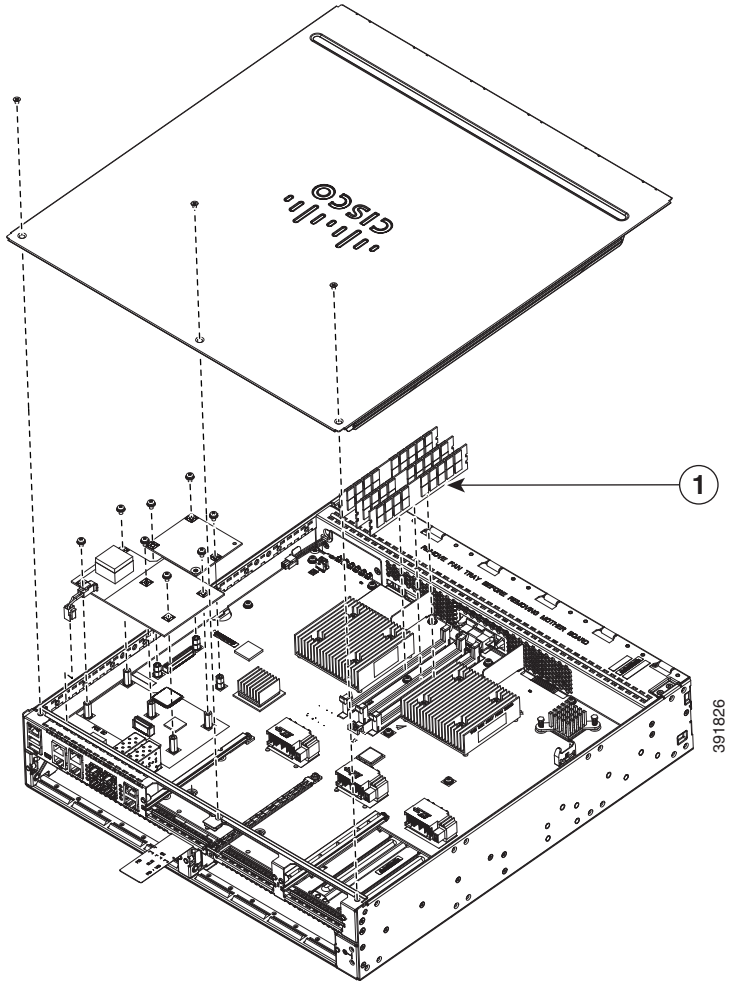

1	DIMM cards

Step 4 Pull the latches away from the DIMM at both ends to lift the DIMM slightly. Pull the DIMM out of the socket as shown in Figure 5-22.

Figure 5-22 Remove a DIMM

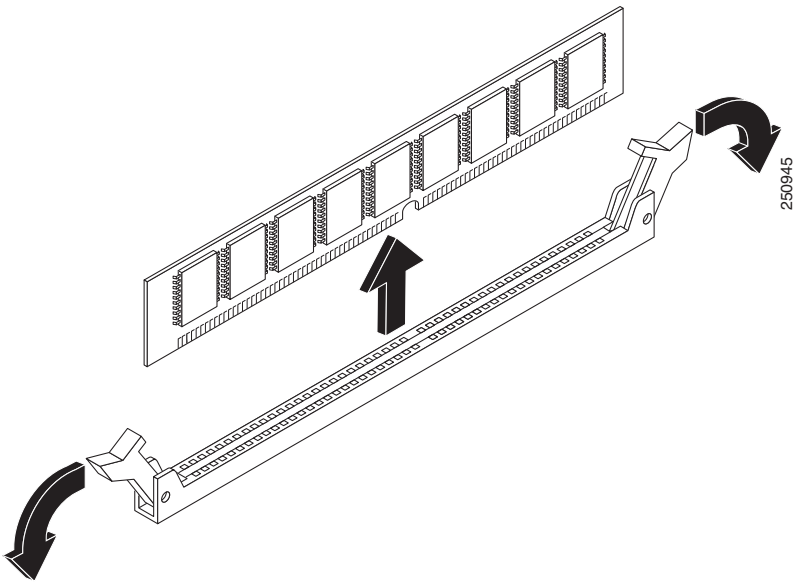

Step 5 Place the DIMM in an antistatic bag to protect it from ESD damage.

Step 6 Replace the chassis cover. See the "Remove and Replace Chassis Cover" section on page 5-4..

Install DIMM

Note The DIMMS on the Cisco 4400 Series ISRand Cisco 4300 Series ISR are not interchangeable.

To install a DIMM:

Step 1 Read the "Safety Warnings" section on page 5-2 section and disconnect the power supply before you replace any module.

Step 2 Remove the chassis cover. For the Cisco 4451-X ISRs, see the "Remove and Replace Chassis Cover" section on page 5-4.

Step 3 Locate the DIMM module. See the "Locate Internal and External Slots for Modules on Cisco 4451 ISR" section on page 5-8 to find the DIMM sockets on the router.

Step 4 Make sure that both latches on the DIMM connector are in the open position.

Step 5 Orient the DIMM so that the polarization notch lines up with the polarization key on the connector. See Figure 5-23.

Figure 5-23 DIMM Showing Polarization Notch

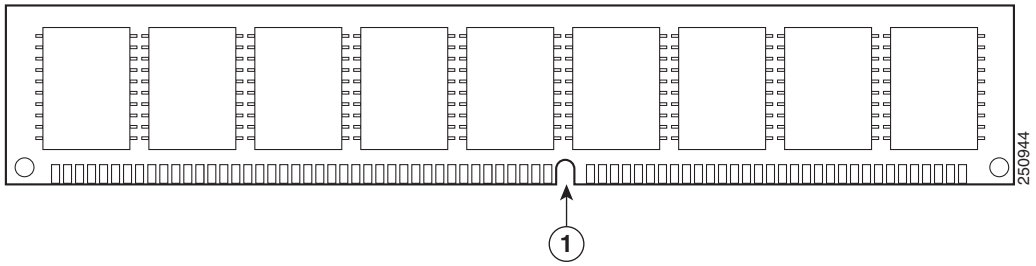

Step 6 Insert the DIMM into the connector one side at a time. Figure 5-24 shows what to avoid while handling a DIMM.

Figure 5-24 Handle the DIMMs

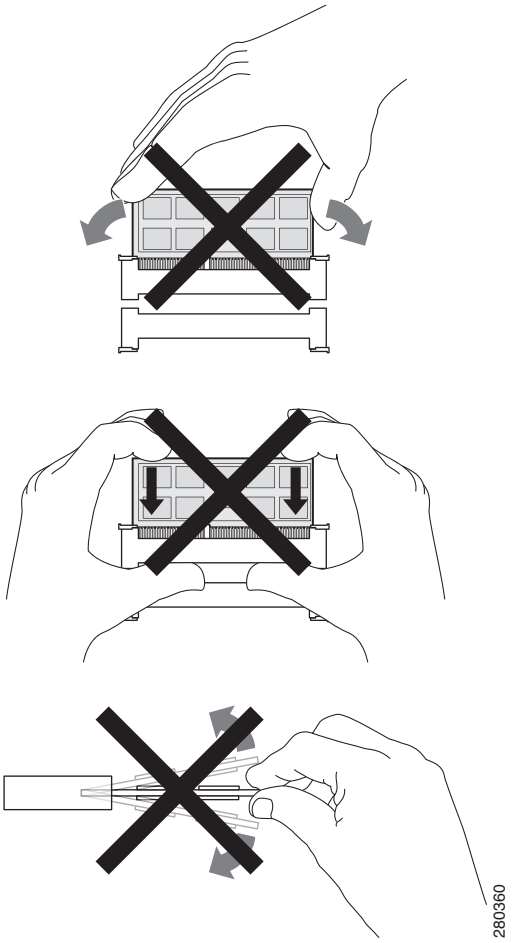

Step 7 Firmly press the DIMM into the connector until the latches close onto the DIMM. Ensure that both latches rotate to the closed position against the DIMM. See Figure 5-25.

Figure 5-25 Install a DIMM

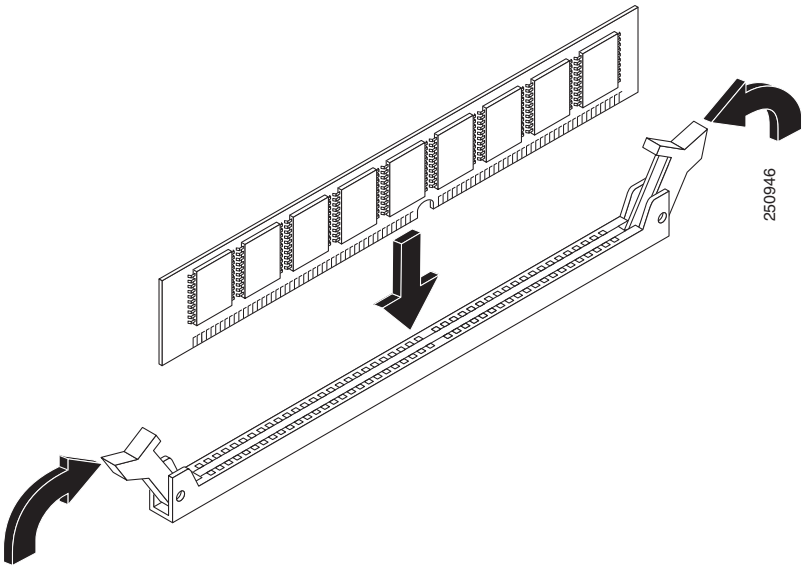

Step 8 Replace the chassis cover. See the "Remove and Replace Chassis Cover" section on page 5-4.

Install and Remove NIMs and SM-Xs on Cisco 4000 Series ISRs

Network Interface Modules (NIMs), Service Modules (SM-Xs), and Cisco E-Series Server Modules plug into the various slots on the motherboard. SM-Xs are sold as spare parts with labels that identify the SM-X type. See the following sections for SM-X installation tasks:

Note The procedures in this section apply to NIMs, SM-Xs, and Cisco E-Series Server modules.

- Software Requirement for SM-Xs
- Locate SM-X or NIM
- Remove SM-X or NIM
- Install SM-X
- Verify SM-X Installation

Caution Always wear an ESD-preventive wrist strap and ensure that it makes good contact with your skin when you remove or install an SM-X. Connect the equipment end of the wrist strap to the metal part of the chassis.

Caution Handle SM-Xs and NIMs by the edges only. SM-Xs are ESD-sensitive components and can be damaged by mishandling.

Software Requirement for SM-Xs

Cisco IOS XE software of a specified release or later release is required for using an SM-X.

To determine the version of Cisco IOS software that is running on your router, log in to the router and enter the **show version** command:

```
Router> show version

Cisco Internetwork Operating System Software
4400 Software (C4400-ADVENTERPRISEK9-M), Version 12.3(8.2)T, INTERIM SOFTWARE
```

Locate SM-X or NIM

See the "Locate Internal and External Slots" section on page 5-6 to locate the SM-X or NIM slot on the motherboard.

Remove SM-X or NIM

To remove an SM-X:

Step 1 Read the "Safety Warnings" section on page 5-2 and disconnect the power supply before you replace any module.

Step 2 Access the SM-X slot. See Figure 5-4 for the various NIM and SM-X slot locations.

Step 3 Loosen the captive screws to open the slot cover. See Figure 5-12 and Figure 5-13.

Step 4 Pull the SM-X out of the connector on the motherboard. Keep the SM-X parallel with the motherboard to prevent damage to the slot and standoff.

Step 5 Place the SM-X in an antistatic bag to protect it from ESD damage.

Install SM-X

To install an SM-X, use a number 2 Phillips screwdriver or flat-blade screw drive, and a 1/4-inch nut driver or wrench.

Step 1 Read the "Safety Warnings" section on page 5-2 and disconnect the power supply before you replace any module.

Step 2 To inset the SM-X, identify the SM-X slot.

Step 3 Loosen the captive screws to open the slot cover. See Figure 5-12 and Figure 5-13.

Step 4 Insert the SM-X to the system board.

Note Press firmly on the SM-X until the board is properly installed on the connector.

Step 5 Insert the screws from the accessory kit through the SM-X into the standoffs. See Figure 5-29. Tighten the screws with a Phillips screwdriver (torque 6 to 8 in-lb or 0.7 to 1.1 Nm.).

Step 6 Check that the SM-X is installed correctly on the system board.

Note For more details on installation of SM-Xs, NIMs, and Cisco E-Series Server Modules, see the hardware installation guide for the particular module you have purchased.

For a list of links to all the SM-Xs and NIMs supported on your router, see the *Documentation Roadmap for the Cisco 4000 Series ISRs*.

Verify SM-X Installation

Use the **show diag** command to verify that the SM-X is installed correctly. In the following example, one SM-X is recognized by the system.

```
router#show diag ?
  all      All related information
  chassis  Chassis related information
  slot     Slot location information for this command
  subslot  Subslot location information for this command

Router#show diag subslot 2/0 eeprom detail
SPA EEPROM data for subslot 2/0:

        EEPROM version           : 4
        Compatible Type          : 0xFF
        Controller Type          : 1909
        Hardware Revision        : 1.0
        PCB Part Number          : 73-14154-02
        Top Assy. Part Number    : 800-36532-01
        Board Revision           : 06
        Deviation Number         : 123598
        Fab Version              : 02
        PCB Serial Number        : FOC15495HU1
        Asset ID                 : REV 2F
        Product Identifier (PID) : SM-X-1T3/E3
        Version Identifier (VID) : V01
        CLEI Code                : TBD
        Base MAC Address         : C4 0A CB 56 00 99
        MAC Address block size   : 3
        Manufacturing Test Data  : 00 00 00 00 00 00 00 00
        Environment Monitor Data : 40 0B E3 43 00 0A
        Platform features        : 02 01 01 0A 00 00 00 00
                                   01 01 00
```

Install and Remove PVDM4 on Cisco 4400 or 4300 Series ISRs

This section describes the installation tasks for the PVDM4 used on the router. The tasks that you perform for installing and removing the PVDM4 are based on specific models of the Cisco 4000 Series Integrated Service Routers.

See the relevant sub-section to install and remove PVDM4 for your specific router in the Cisco 4000 Series ISRs:

- Tools and Equipment Requirements

- Install PVDM4 on the Motherboard of Cisco 4400 Series ISRs
- Remove the PVDM4 from the Motherboard of Cisco 4400 ISRs
- Install the PVDM4 on the Motherboard of Cisco 4331 ISR
- Remove the PVDM4 from the Motherboard of Cisco 4331 ISR
- Install the PVDM4 on Cisco Fourth-Generation T1/E1 Voice and WAN NIM
- Remove the PVDM4 from Cisco Fourth-Generation T1/E1 Voice and WAN NIM

Tools and Equipment Requirements

You need the following tools and equipment when you work with PVDM4:

- Number 1 Phillips screwdriver or a small flat-blade screwdriver
- ESD-preventive wrist strap
- (For routers using DC power) Tape to secure DC circuit breaker handle

PVDM4 Location and Orientation

The PVDM4 connector is located on the motherboard. Figure 5-26 shows the PVDM4, screws, and connector. The connector on the PVDM4 must align with the corresponding connector on the motherboard.

Figure 5-26 View of PVDM4 Connector and Screws

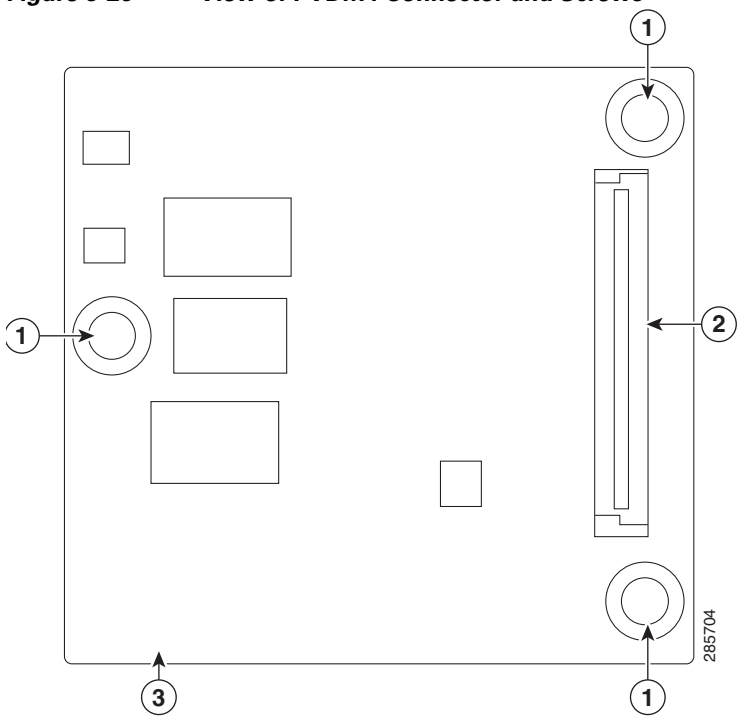

Install PVDM4 on the Motherboard of Cisco 4400 Series ISRs

To install the PVDM4:

Step 1 Read the "Safety Warnings" section on page 5-2 and disconnect the power supply before you replace any module.

Step 2 Turn off electrical power to the router. Leave the power cable plugged in to channel ESD voltages to ground.

Step 3 Remove the cover.

Step 4 Identify the ISC slot on the router's main motherboard.

Step 5 Locate the three standoffs from the motherboard. See Figure 5-27.

Step 6 Insert the PVDM4 into the ISC slot on the system board.

Note Press firmly on the PVDM4 until the board seats onto the connector.

Step 7 Insert the screws from the accessory kit through the PVDM4 into the standoffs. Tighten the screws with a Phillips screwdriver (torque 6 to 8 in-lb. or 0.7 to 1.1 Nm).

Step 8 Check if the PVDM4 is installed correctly on the system board.

Step 9 Replace the cover.

Caution When you remove or install the PVDM4, always wear an ESD-preventive wrist strap, and ensure that it makes good contact with your skin. Connect the equipment end of the wrist strap to the metal part of the chassis.

Caution Handle the PVDM4 only by the edges. PVDM4s are ESD-sensitive components and can be damaged by mishandling.

Warning **No user-serviceable parts inside. Do not open.** Statement 1073

Warning **Only trained and qualified personnel should be allowed to install, replace, or service this equipment.** Statement 1030

Remove the PVDM4 from the Motherboard of Cisco 4400 ISRs

To remove the PVDM4:

Step 1 Turn off electrical power to the router. Leave the power cable plugged in to channel ESD voltages to ground.

Step 2 Remove the router cover.

Step 3 Locate the PVDM4 on the motherboard. See Figure 5-27.

Figure 5-27 Location of PVDM4 on Cisco 4451-X ISR

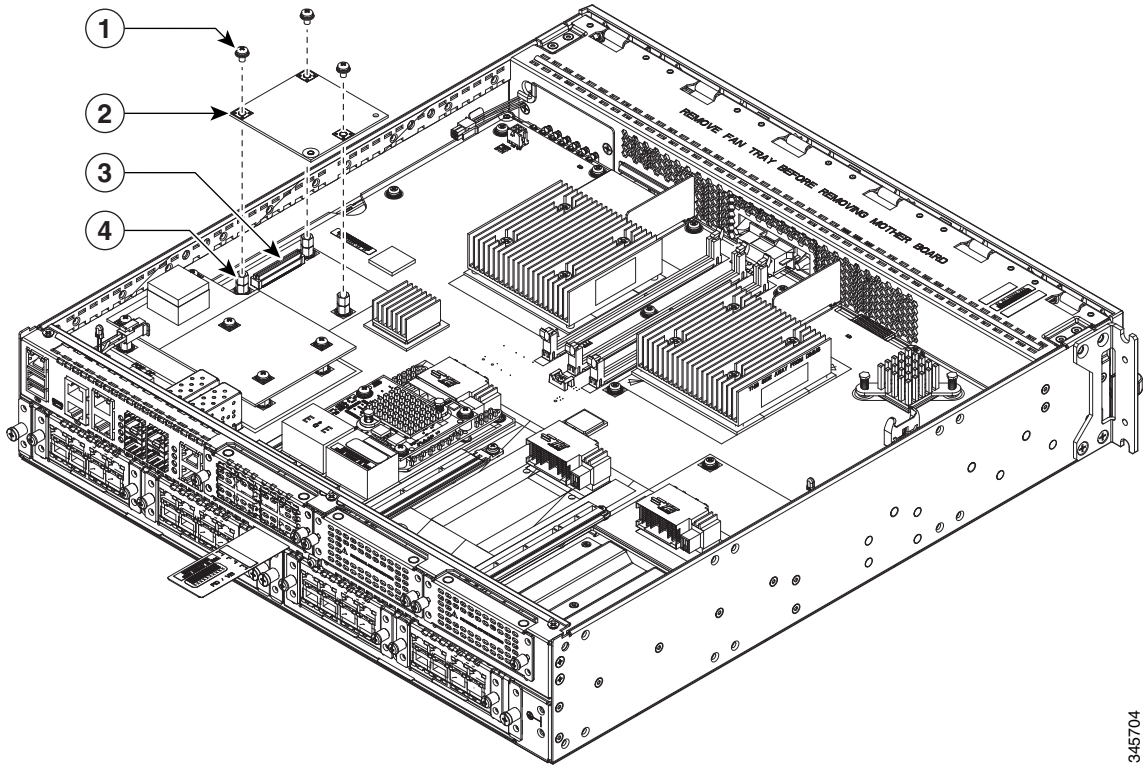

1	Screws	**2**	PVDM4
3	Connector	**4**	Standoffs

Step 4 Loosen and remove the three screws on the PVDM4.

Step 5 Lift the PVDM4 up from the motherboard.

Step 6 Place the PVDM4 in an antistatic bag.

Step 7 Replace the cover.

Install the PVDM4 on the Motherboard of Cisco 4331 ISR

Step 1 Read the "Safety Warnings" section on page 5-2 and disconnect the power supply before you replace any module.

Step 2 Turn off electrical power to the router. Leave the power cable plugged in to channel ESD voltages to ground.

Step 3 Remove the cover.

Step 4 Identify the ISC slot on the router's main motherboard.

Step 5 Locate the three standoffs from the motherboard. See Figure 5-28.

Step 6 Insert the PVDM4 into the ISC slot on the system board.

Note Press firmly on the PVDM4 until the board seats onto the connector.

Step 7 Insert the screws from the accessory kit through the PVDM4 into the standoffs. Tighten the screws with a Phillips screwdriver (torque 6 to 8 in-lb. or 0.7 to 1.1 Nm).

Step 8 Check that the PVDM4 is installed correctly on the system board.

Step 9 Replace the cover.

Caution When you remove or install the PVDM4, always wear an ESD-preventive wrist strap, and ensure that it makes good contact with your skin. Connect the equipment end of the wrist strap to the metal part of the chassis.

Caution Handle the PVDM4 by the edges only. PVDM4s are ESD-sensitive components and can be damaged by mishandling.

Warning **No user-serviceable parts inside. Do not open.** Statement 1073

Warning **Only trained and qualified personnel should be allowed to install, replace, or service this equipment.** Statement 1030

Remove the PVDM4 from the Motherboard of Cisco 4331 ISR

Step 1 Turn off electrical power to the router. Leave the power cable plugged into the channel ESD voltages to ground.

Step 2 Remove the router cover.

Step 3 Locate the PVDM4 on the motherboard. See Figure 5-28.

Figure 5-28 Location of PVDM4 on Cisco 4331 ISR

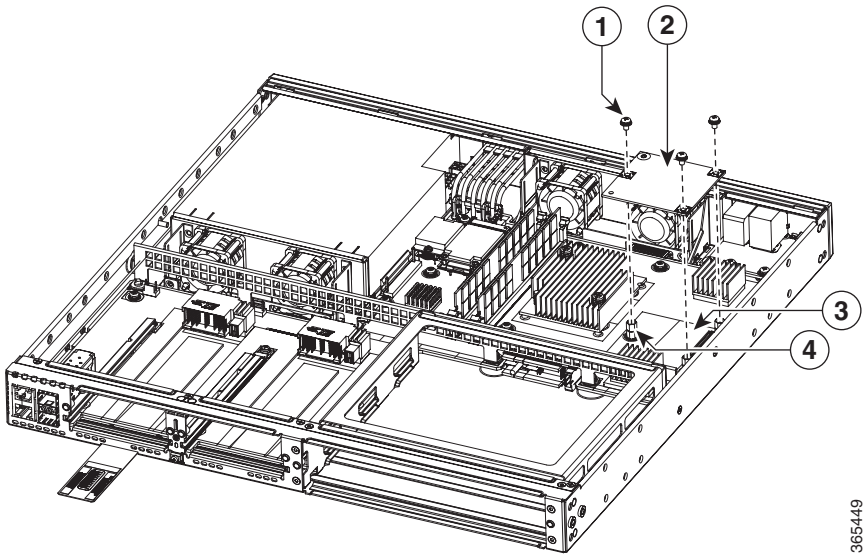

1	Screws	**2**	PVDM4
3	Connector	**4**	Standoffs

Step 4 Loosen and remove the three screws on the PVDM4.

Step 5 Lift the PVDM4 up from the motherboard.

Step 6 Place the PVDM4 in an anti-static bag.

Step 7 Replace the cover.

Install the PVDM4 on Cisco Fourth-Generation T1/E1 Voice and WAN NIM

Step 1 Shut down the electrical power to the slot in the router by either turning off the electrical power to the router or by issuing the online insertion and removal (OIR) commands. Leave the power cable plugged in to channel ESD voltages to ground. For more information on OIR, see the Appendix, "Online Insertion and Removal (OIR) and Hot-Swapping".

Step 2 Loosen the two captive screws on the network interface module.

Step 3 Remove the network interface module. (See Figure 5-29.)

Figure 5-29 Network Interface Module with PVDM4

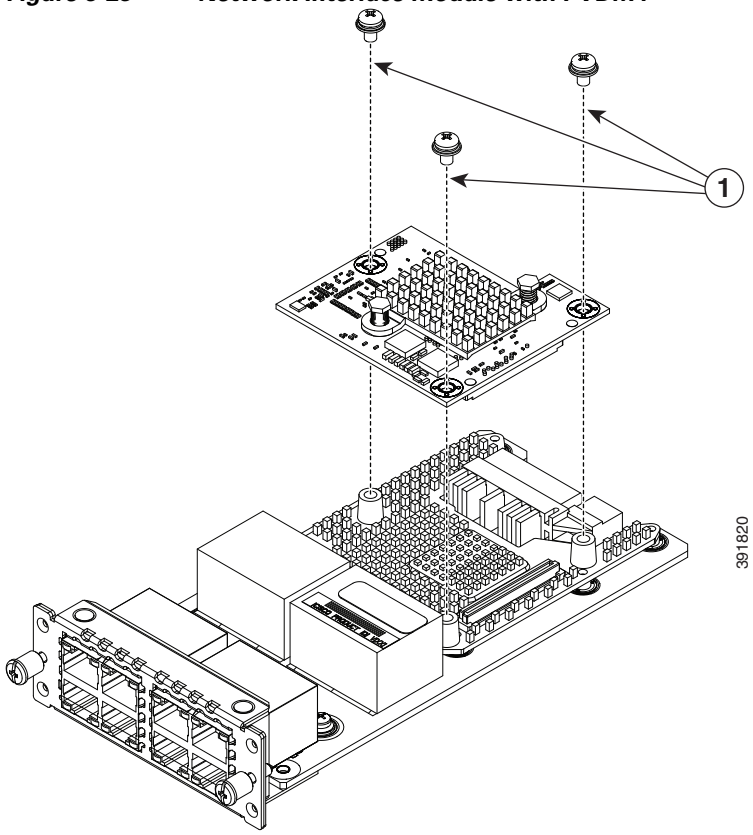

1	Captive Screws

Step 4 Locate the three standoffs on the network interface module where the PVDM4 resides.

Step 5 Align the PVDM4 with the connector and the standoffs, and attach the PVDM4 with the three screws.

Step 6 Slide the network interface module back in the router, and tighten the captive screws.

Remove the PVDM4 from Cisco Fourth-Generation T1/E1 Voice and WAN NIM

Step 1 Shut down the electrical power to the slot in the router by either turning off the electrical power to the router or by issuing the online insertion and removal (OIR) stop command. Leave the power cable plugged in to channel ESD voltages to ground. For more information on OIR, see the OIR Procedures.

Step 2 Loosen the two captive screws on the network interface module.

Step 3 Remove the network interface module with the PVDM4. (See Figure 5-29.)

Step 4 Loosen the three screws and standoffs on the PVDM4.

Step 5 Lift the PVDM4 up from the network interface module.

Step 6 Place the PVDM4 in an antistatic bag.

Step 7 If you are not immediately replacing the network module, install the blank cover over the empty network module slot.

Step 8 Slide the network interface module back in the router, and tighten the captive screws.

Remove and Replace the USB Flash Token Memory Stick

The Cisco 4000 Series ISRs contain ports for a 1 GB flash token memory stick to store configurations or Cisco IOS XE consolidated packages.

Note Only Cisco USB Flash memory modules are supported on Cisco routers.

Caution Do not remove a USB Flash memory module when you execute file access command or a read/write operation to the Flash memory module when it is processing. The router may reload or the USB Flash memory module can be damaged. You can check to see if the USB activity LED on the router front panel is flashing, prior to the removal of the USB device.

To remove and then replace a USB flash token memory stick from the router:

Step 1 Pull the memory stick from the USB port.

Step 2 To replace Cisco USB Flash memory stick, simply insert the module into the USB port 0 or 1 port as shown in Figure 5-30. The Flash memory module can be inserted in only one way, and can be inserted or removed whether the router is powered on or off.

Note Figure 5-30 shows how the memory stick is inserted into the port and does not display the actual router faceplate.

Figure 5-30 Router Flash Token Memory Stick

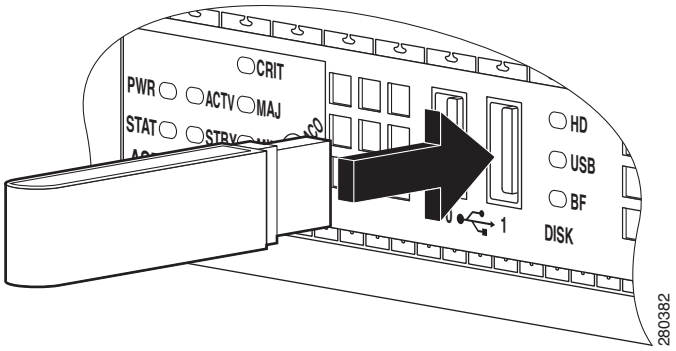

Note You can insert or remove the memory stick whether the router is powered on or off.

Remove and Replace Cisco 4000 Series ISRs Power Supplies

Cisco 4400 and 4300 Series ISRs have replaceable power supply modules. These modular power supplies can be removed or installed using only a screwdriver.

- AC Power Supplies, page 5-42
- Overview of DC Power Supply, page 5-46
- Replace the Power Supply Module on the Cisco 4331 Router, page 5-53
- PoE Converter Power Supply Unit, page 5-58

Warning **Blank faceplates and cover panels serve three important functions: they prevent exposure to hazardous voltages and currents inside the chassis; they contain electromagnetic interference (EMI) that might disrupt other equipment; and they direct the flow of cooling air through the chassis. Do not operate the system unless all cards, faceplates, front covers, and rear covers are in place.** Statement 1029

Warning **This unit might have more than one power supply connection. All connections must be removed to de-energize the unit.** Statement 1028

Warning **Care should be taken while removing the power supplies and power inverters (especially in boost mode of operation). If the total power consumption is higher than can be supported by one power supply alone and in this condition a power supply is removed, the hardware can be damaged. This may then result in the system being unstable or unusable.**

AC Power Supplies

Overview of the AC Power Supply

Power supply has a similar modular form factor without cabling for easy removal and replacement.

Figure 5-31 Power Supply Unit (Cisco 4461 ISR Shown)

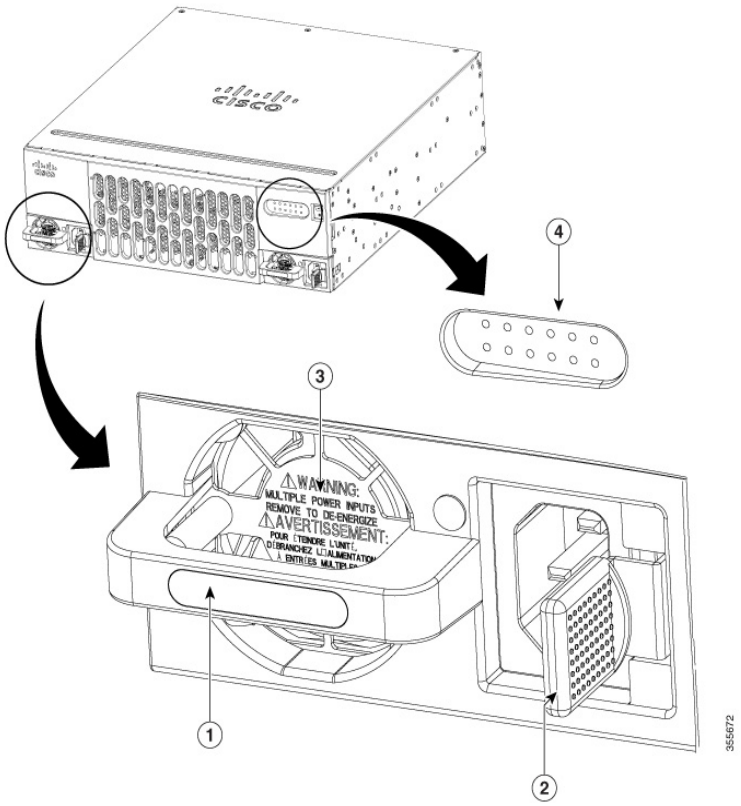

Figure 5-32 Power Supply Unit (Cisco 4451-X ISR Shown)

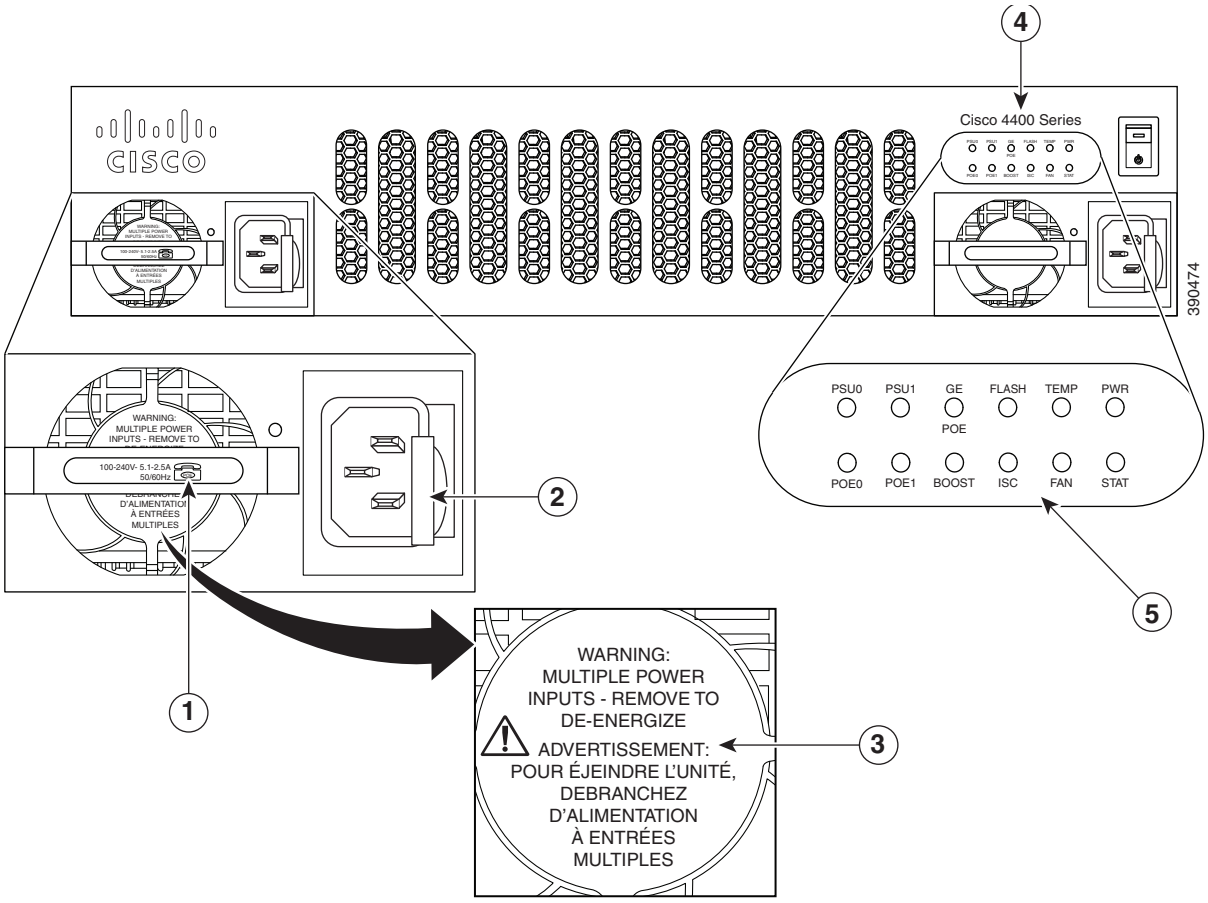

1	Phone icon refers to PoE	**2**	PSU Latch
3	Multiple power supply unit warning message—appears when there are multiple power inputs	**4**	Product series name
5	LEDs		

Replace AC Power Supply

Caution Care should be taken while removing the power supplies and PoE power supply, especially in boost mode of operation. If the total power consumption is higher than that which can be supported by one PSU alone, and in this condition, if you remove a PSU, you may damage the hardware. This may result in the system being unstable or unusable.
Similarly, if there is only one PoE power supply and it is providing PoE power to an SM-X, and if the PoE power supply is removed, the hardware may be damage and may result in the system being unstable or unusable.

Step 1 Read the "Safety Warnings" section on page 5-2 section and disconnect the power supply before you replace any module.

Step 2 Remove the router bezel. The bezel is secured with snap latches. To remove the bezel, hold the top and bottom and pull the bezel.

Step 3 Pull on the quick-release catch on the side to leverage the power supply from its connector, and then slide the power supply module out of the chassis.

Step 4 Insert the replacement power supply module.

Step 5 Replace the bezel.

Figure 5-33 Cisco 4451-X ISR Power Supply Units

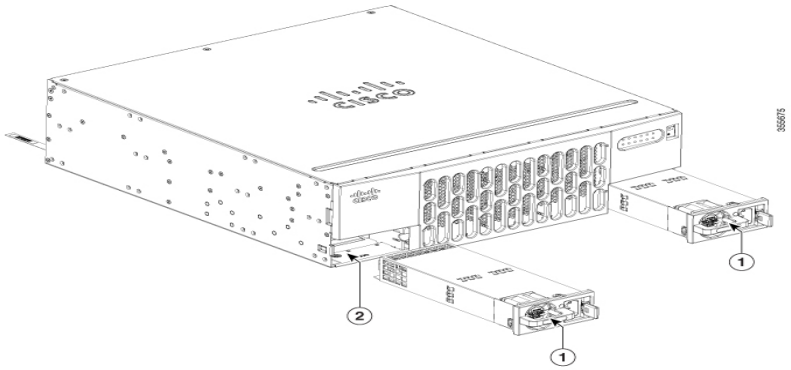

1	AC power supply unit PSU (behind the bezel)	**2**	Router On/Off switch

Figure 5-34 Cisco 4451-X ISR Power Supply Units

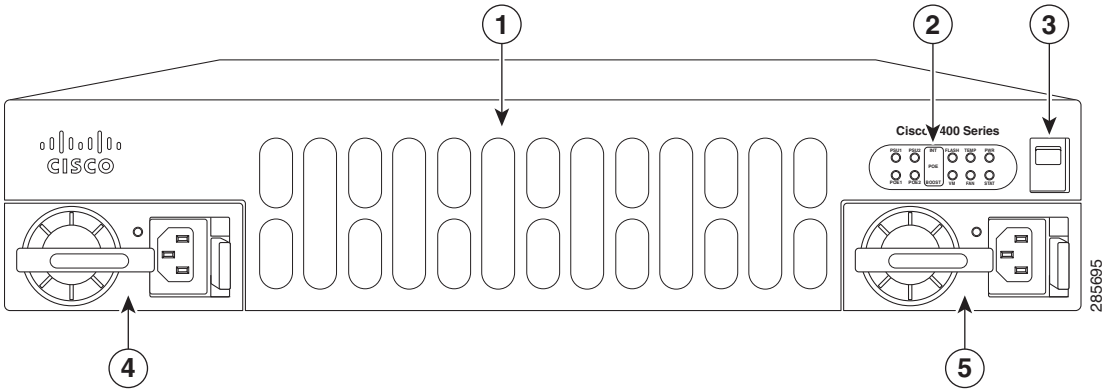

1	Router fan tray (behind the bezel)	**2**	LEDs
3	Router On/Off switch	**4**	AC power supply unit PSU0
5	AC power supply unit PSU1		

Overview of DC Power Supply

This section describes the installation procedure that is common for all Cisco 4400 and 4300 Series ISRs. The DC power supply is only supported on Cisco 4461 ISR, Cisco 4451-X ISR, Cisco 4431 ISR, and Cisco 4351 ISR.

- Remove DC Input Power from Cisco 4461 or 4431 ISR, page 5-48
- Install DC Input Power on Cisco 4431 ISR, page 5-49
- Remove DC Input Power from Cisco 4331 ISR, page 5-54
- Install DC Input Power on Cisco 4431 ISR, page 5-49
- PoE Converter Power Supply Unit, page 5-58

For the Cisco 4431 ISR, the input connector and plug must be UL recognized under UL 486 for field wiring. The connection polarity is from left to right: negative (–), positive (+), and ground.

For the Cisco 4451-X ISR and Cisco 4351 ISR, the input connector and plug must be UL recognized under UL 486 for field wiring. The connection polarity is from left to right: ground, negative (–), positive (+).

The power supply has a handle that is used for insertion and extraction. The module must be supported with one hand because of its length.

For Cisco 4461 ISR, the power supply DC input range is –40 to –72 VDC, and the maximum power is 650 W.

For Cisco 4431 ISR, the power supply DC input range is –48 to –60 VDC, and the maximum power is 350 W.

For Cisco 4451 ISR and Cisco 4351 ISR, the power supply DC input range is –48 to –60 VDC, and the maximum power is 437 W.

Figure 5-35 Cisco 4461 DC Power Supply

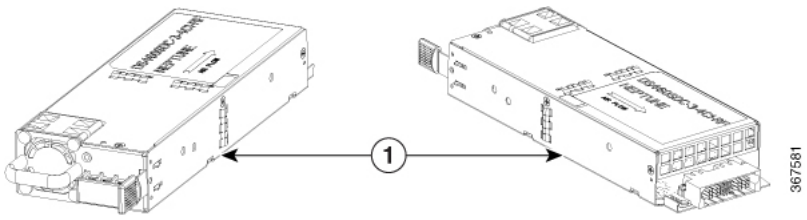

1	DC Power Supply Unit		

Figure 5-36 DC Power Supply

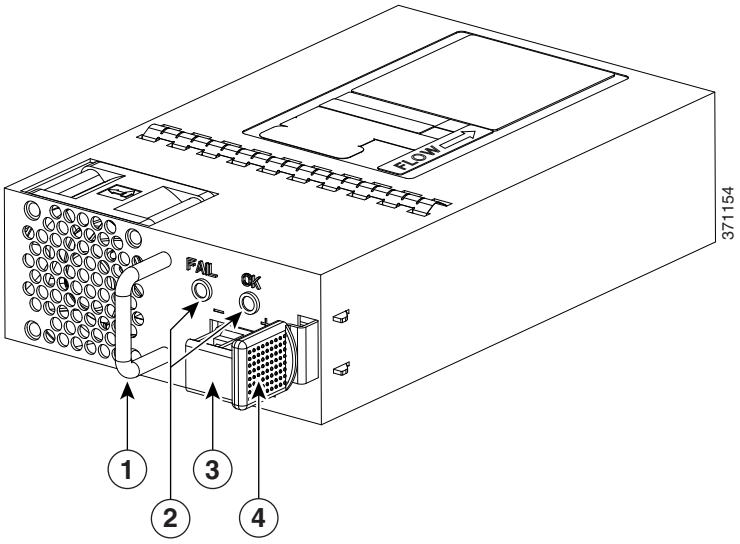

1	Handle	**2**	FAIL and OK LEDs
3	DC power connector	**4**	Ejector latch

Remove DC Input Power from Cisco 4461 or 4431 ISR

This section describes how to remove a DC power supply from Cisco 4461 or 4431 ISR.

Note The Cisco 4431 ISR has redundant power supplies that can be hot-swapped.

To remove a DC power supply from Cisco 4461 or 4431 ISR:

Step 1 If you have redundant power supplies, ensure that the power switch is in the standby position.

Note You do not require to place the power switch in the standby position if you want to hot-swap a single power supply.

Warning **Before performing any of the following procedures, ensure that power is removed from the DC circuit.** Statement 1003

Warning **To reduce risk of electric shock, when installing or replacing the unit, the ground connection must always be made first and disconnected last.** Statement 1046

Step 2 For Cisco 4461 ISR and Cisco 4431 ISR, unscrew the two terminal block wire connectors (negative and positive) on the unit. See Figure 5-40.

For Cisco 4451 ISR and Cisco 4351, unscrew the three terminal block wire connectors (ground, negative and positive) on the unit. For Cisco 4331 ISR, remove the power supply cable connector (See Figure 5-41) and remove the two screws that secure the power supply module to the chassis.

Step 3 [Only for Cisco 4461, 4431, and 4331 ISRs] Remove the plastic bezel from the router.

Step 4 Press the retaining latch towards the pull handle, grasp the handle with one hand, and pull the power supply out of the slot while supporting the weight of the power supply with the other hand. See Figure 5-37.

Figure 5-37 Remove DC Power Supply

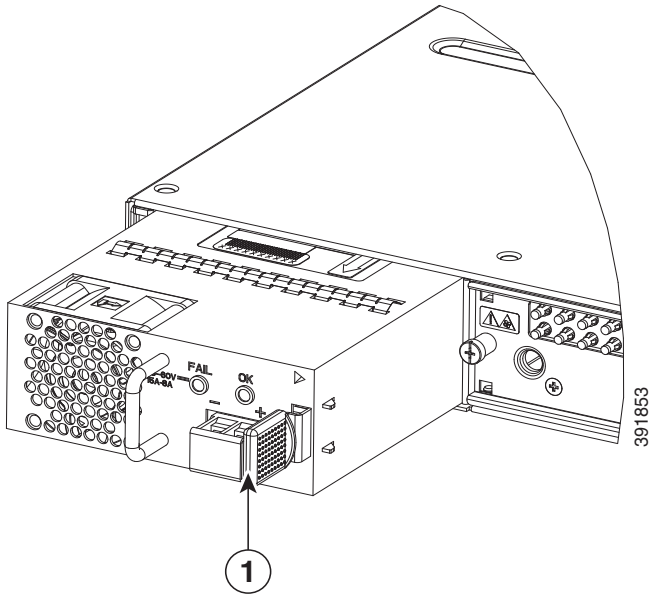

1	Retaining latch		

Install DC Input Power on Cisco 4431 ISR

Warning **Only trained and qualified personnel should be allowed to install, replace, or service this equipment.** Statement 1030

This section describes how to install the DC power supply input power leads to the Cisco 4431 Router DC input power supply.

- The color coding of the DC input power supply leads depend on the color coding of the DC power source at your site. Ensure that the lead color coding you choose for the DC input power supply matches the lead color coding used at the DC power source. Verify that the power source is connected to the negative (–) terminal and to the positive (+) terminal on the power supply.
- Ensure that the chassis ground is connected on the chassis before you begin installing the DC power supply. Follow the steps provided in the "Chassis Grounding" section on page 3-20.

Wire the DC Input Power Source

The Cisco 4431 ISR DC power supply has a terminal block that is installed into the power supply terminal block header.

To wire the DC input power source:

Step 1 If you have redundant power supplies, ensure that the power switch is in the standby position.

Note You do not require to place the power switch in the standby position if you want to hot-swap a single power supply.

Step 2 Insert the power supply in the power-supply slot, and gently push it into the slot. When correctly installed:

- For Cisco 4431 ISR, the DC power supply (excluding the extraction handle) is flush with the router.
- For Cisco 4451 ISR and Cisco 4351ISR, the DC power supply (excluding the extraction handle) is recessed from the router bezel.

Step 3 Wire can be stripped and terminated directly to the power supply terminal block, or a crimp style spade terminal lug can be used. If you are using a terminal lug, follow the manufacturer's instructions for terminating the lug to the wire. If terminating directly to the terminal block using bare wire, follow the instructions in the Figure 5-40. Use a wire-stripping tool to strip each of the two wires coming from the DC input power source and strip the wires to approximately 0.39 inch (10 mm) ± 0.02 inch (0.5 mm). We recommend that you use 14 AWG insulated wire. Do not strip more than the recommended length of wire because doing so could leave the wire exposed from the terminal block. Figure 5-38 shows a stripped DC input power source wire.

Figure 5-38 Stripped DC Input Power Source Wire

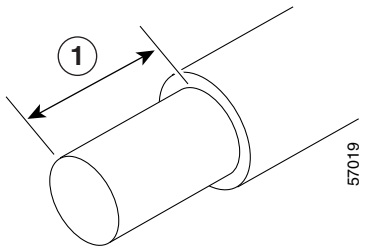

1	0.39 inch (10 mm) is the recommended wire-strip length for the terminal block.

Warning **An exposed wire lead from a DC input power source can conduct harmful levels of electricity. Be sure that no exposed portion of the DC input power source wire extends from the terminal block.** Statement 122

Step 4 Identify the positive and negative feed positions for the terminal block connection. The wiring sequence is:

1. Positive (+) lead wire (right)
2. Negative (–) lead wire (left)

Step 5 Remove the router bezel. See Figure 5-39. The bezel is secured with snap latches. To remove the bezel, hold the top and bottom and pull the bezel.

Figure 5-39 Remove the Bezel

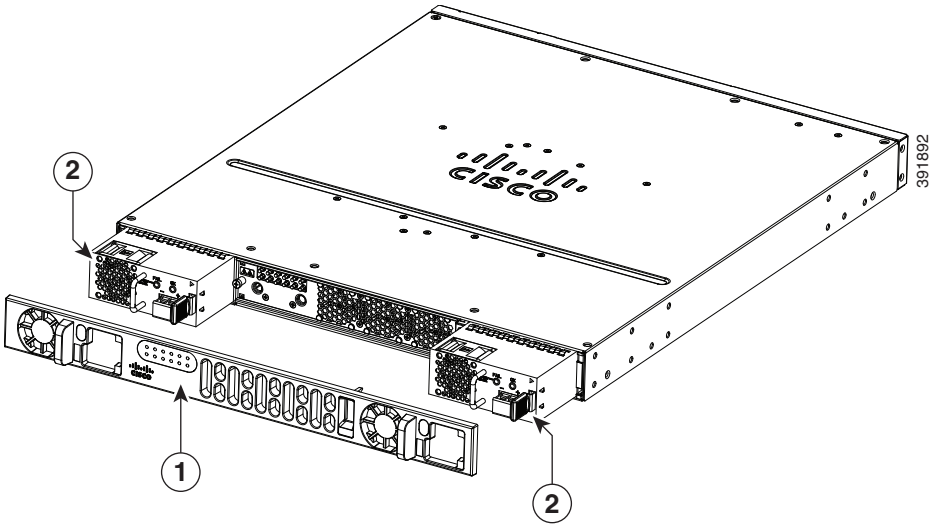

1	Bezel	**2**	DC power supplies

Step 6 Insert the wires through the holes in the bezel. Replace the bezel.

Step 7 Insert the exposed wire into the terminal block. Ensure that the wire lead is not placed outside the plastic cover. Only wires *with insulation* should extend from the terminal block.

Caution Do not overtorque the terminal block captive screws. Ensure that the connection is snug, but the wire is not crushed. Verify by tugging lightly on each wire to ensure that they do not move.

Step 8 Use a screwdriver to tighten the terminal block captive screws, as shown in Figure 5-40.

Figure 5-40 DC Power Supply with Lead Wires

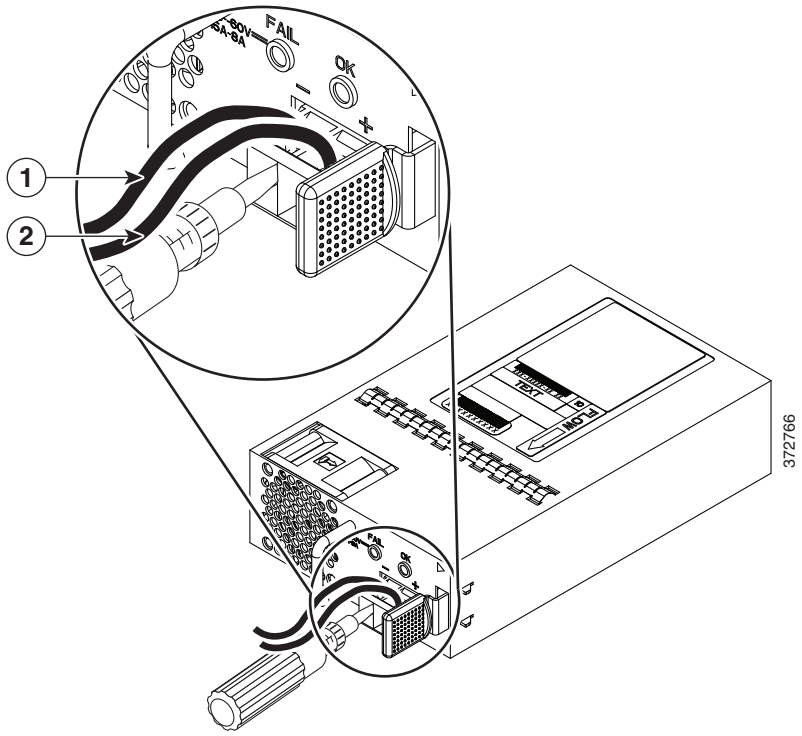

1	Negative (–) lead wire	**2**	Positive (+) lead wire

Step 9 Repeat these steps for the remaining DC input power source wire as applicable.

Step 10 Use a tie wrap to secure the wires to the rack, so that the wires are not pulled from the terminal block by casual contact.

Step 11 Turn on the circuit breaker at the power source.

Step 12 If you have changed the standby switch to the standby position in Step 1, turn the standby switch to the On position.

The power supply LEDs illuminate green.

Replace the Power Supply Module on the Cisco 4331 Router

Step 1 Read the "Safety Warnings" section on page 5-2 section, and turn off the system power before you perform the power supply module replacement.

Step 2 Remove the four cover screws from the top of the chassis.

Note The length of the cover screw on top of the chassis is shorter.

Step 3 Remove the two cover screws from each side of the chassis, and lift the cover away from the router chassis. See Figure 5-51.

Step 4 Remove the fan tray. Follow the steps provided in the "Replace Fan Tray on Cisco 4331 ISR" section on page 5-64.

Step 5 Remove the power supply cable connector. See Figure 5-41.

Step 6 Remove the two screws that secure the power supply module to the chassis.

Step 7 Pull the power supply module out of the chassis using the power supply tab. See Figure 5-41.

Step 8 Insert the replacement power supply module and align the power supply module into the slot.

Step 9 Tighten the two screws (torque 6 to 9 in-lb) that secure the power supply module to the chassis. See Figure 5-41.

Step 10 Connect the power supply cable connector.

Step 11 Insert the fan tray and gently push down until the spring-lock is latched and fully engaged onto the slot. Follow the steps provided in the "Replace Fan Tray on Cisco 4331 ISR" section on page 5-64.

Step 12 Connect the fan connectors on the motherboard. See Figure 5-52.

Step 13 Turn on the system power and verify that the power supply module is functioning normally.

Step 14 Turn off the system power before you cover over the chassis.

Step 15 Center the cover over the chassis and lower it onto the chassis.

Step 16 Install the four cover screws (torque 5 to 6 in-lb) on the top of the chassis and install the two cover screws (torque 5 to 6 in-lb) on each side of the chassis. See Figure 5-51.

Figure 5-41 Cisco 4331 ISR Power Supply Module

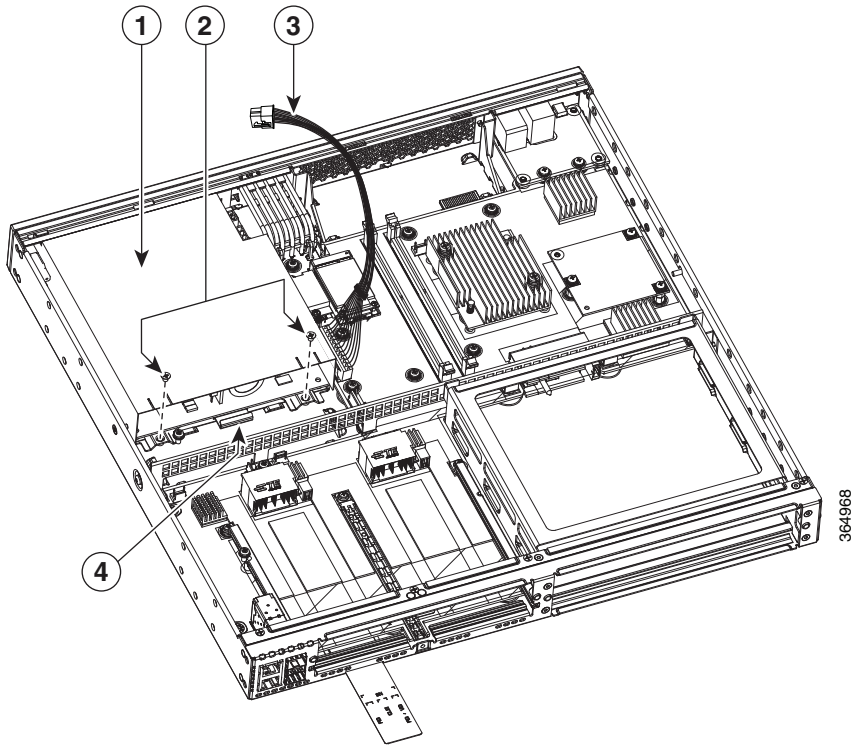

1	Power supply module	**2**	Screws
3	Power supply cable connector	**4**	Power supply module tab

Remove DC Input Power from Cisco 4331 ISR

Warning **Before performing any of the following procedures, ensure that power is removed from the DC circuit.** Statement 1003

Warning **Only trained and qualified personnel should be allowed to install, replace, or service this equipment.** Statement 1030

Warning **When installing or replacing the unit, the ground connection must always be made first and disconnected last.** Statement 1046

This section describes how to remove a DC input power from Cisco 4331 Series ISR.

Step 1 Turn off the circuit breaker at the power source.

Step 2 Ensure that the power switch is in the standby position.

Step 3 Remove the plastic cover from the terminal block. Save the covers for re-installation after you finish wiring. See Figure 5-37.

Step 4 Use a screwdriver to loosen the terminal block captive screws, as shown in Figure 5-41.

Step 5 Repeat these steps for the remaining DC input power source wire as applicable.

Step 6 Remove the input power cable from the terminal block, and gently push it out of the terminal block.

Figure 5-42 Remove the Plastic Cover and DC Input Power

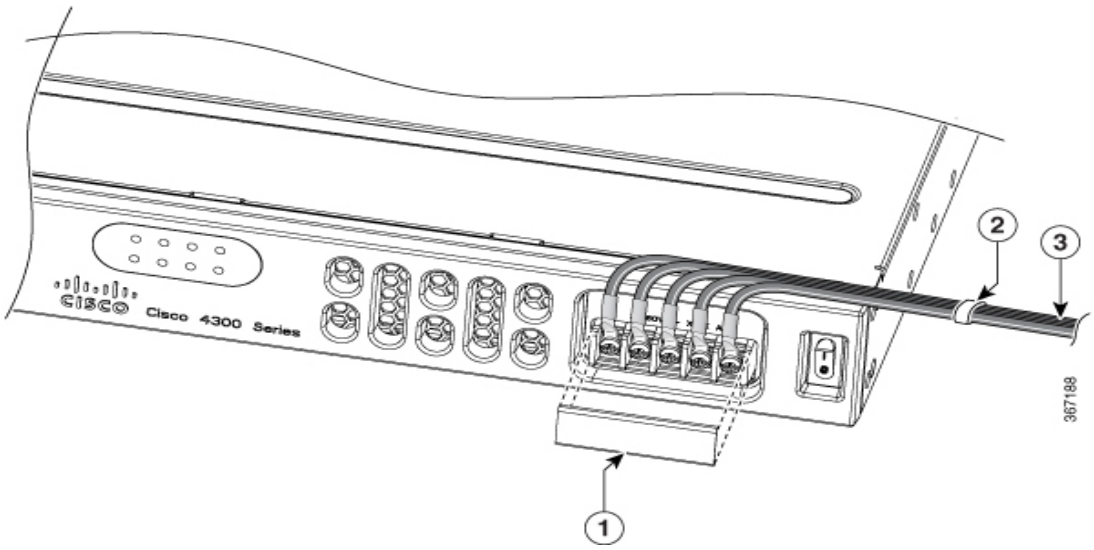

1	Plastic Cover		Cable Tie
	DC Power Source		

Install DC Input Power on Cisco 4331 ISR

Warning **Before performing any of the following procedures, ensure that power is removed from the DC circuit.** Statement 1003

Warning **Only trained and qualified personnel should be allowed to install, replace, or service this equipment.** Statement 1030

This section describes how to install the DC power supply input power leads to the Cisco 4331 Router DC input power supply.

- The color coding of the DC input power supply leads depend on the color coding of the DC power source at your site. Ensure that the lead color coding you choose for the DC input power supply matches the lead color coding used at the DC power source and verify that the power source is connected to the negative (–) terminal and to the positive (+) terminal on the power supply.

- Ensure that the chassis ground is connected on the chassis before you begin installing the DC power supply. Follow the steps provided in the "Chassis Grounding" section on page 3-20.

Wire the DC Input Power Source on Cisco 4331 ISR

The Cisco 4331 ISR DC power supply supports 12V/21A output with the DC input range from 24 to 60 VDC.

Note The input current should be less than 6.3 A at 48 VDC. It is recommended to use slow blow fuse and have the input fuse value less than or equal to 25 A.

The Cisco 4331 ISR DC power supply has a terminal block that is installed into the power supply terminal block header.

To wire the DC input power source:

Step 1 Ensure that the power switch is in the standby position.

Step 2 Insert the power supply in the power-supply slot, and gently push it into the slot.

Step 3 Wire can be stripped and terminated directly to the power supply terminal block, or a crimp style spade terminal lug can be used. If you are using a terminal lug, follow the manufacturer's instructions for terminating the lug to the wire. If terminating directly to the terminal block using bare wire, follow the instructions in the Figure 5-37. Use a wire-stripping tool to strip each of the two wires coming from the DC input power source and strip the wires to approximately 0.39 inch (10 mm) ± 0.02 inch (0.5 mm). It is recommended that 14 AWG insulated wire be used. Do not strip more than the recommended length of wire because doing so could leave the wire exposed from the terminal block. Figure 5-38 shows a stripped DC input power source wire.

Figure 5-43 Stripped DC Input Power Source Wire

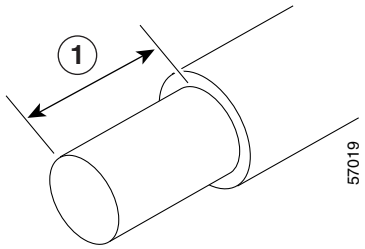

1	0.39 inch (10 mm) is the recommended wire-strip length for the terminal block.

Warning **An exposed wire lead from a DC input power source can conduct harmful levels of electricity. Be sure that no exposed portion of the DC input power source wire extends from the terminal block.** Statement 122

Step 4 Identify the positive and negative feed positions for the terminal block connection. The wiring sequence is:

1. Positive (+) lead wire (right)
2. Negative (–) lead wire (left)

Step 5 Remove the plastic cover from the terminal block. Save the covers for reinstallation after you finish wiring. See Figure 5-37.

Figure 5-44 Remove the Plastic Cover

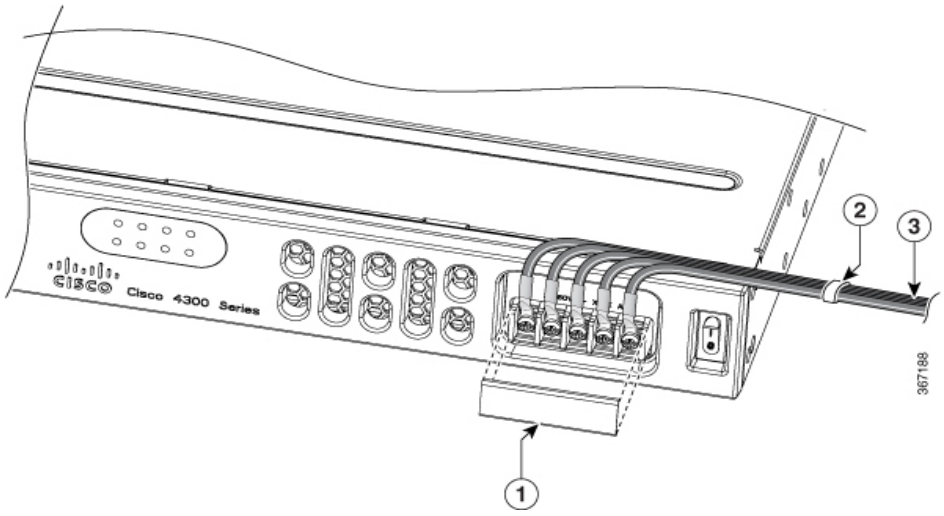

1	Plastic Cover	**2**	Cable Tie
3	DC Power Source		

Step 6 Insert the wires through the holes. Replace the plastic cover.

Step 7 Insert the exposed wire into the terminal block. Ensure that the wire lead is not placed outside the plastic cover. Only wires *with insulation* should extend from the terminal block.

Caution Do not overtorque the terminal block captive screws. Ensure that the connection is snug, but the wire is not crushed. Verify by tugging lightly on each wire to ensure that they do not move.

Step 8 Use a screwdriver to tighten the terminal block captive screws, as shown in Figure 5-40.

Step 9 Repeat these steps for the remaining DC input power source wire as applicable.

Step 10 Use a tie wrap to secure the wires to the rack, so that the wires are not pulled from the terminal block by casual contact.

Step 11 Turn on the circuit breaker at the power source.

Step 12 If you have changed the standby switch to the standby position in step 1, turn the standby switch to the On position.

The power supply LEDs illuminate green.

PoE Converter Power Supply Unit

This section includes:

- Overview of the PoE Converter Power Supply Unit, page 5-58
- Remove PoE Power Supply Slot Filler, page 5-59
- Install the PoE Converter Power Supply, page 5-59
- Remove PoE Converter Power Supply, page 5-60
- Install the PoE Power Supply Slot Filler, page 5-60

Overview of the PoE Converter Power Supply Unit

The PoE converter power supply supports online insertion feature. The PoE converter power supply does not support online removal.

The optional PoE converter PSU slots come with factory-installed fillers. You must remove them to install the PoE converter power supplies.

Note If using only one PoE converter power supply, you must install the PoE converter power supply in PoE slot 0.

Figure 5-45 shows the location of the PoE converter power supply slots located behind the bezel and fan tray.

Figure 5-45 Remove Bezel and Fan Tray to Locate PoE Slots

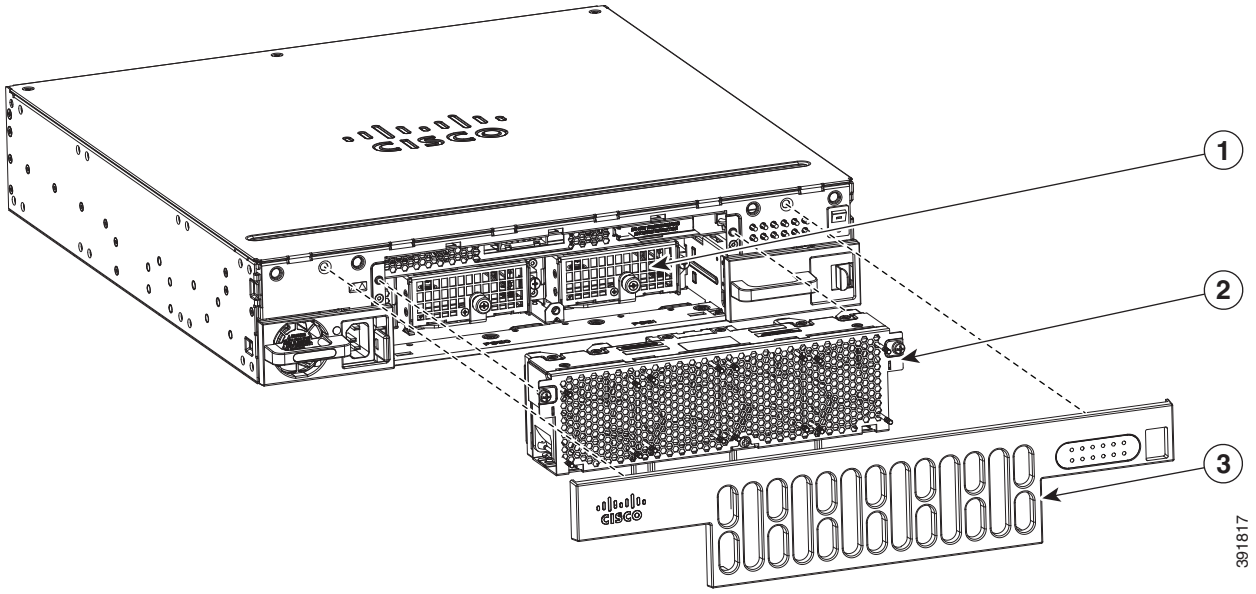

1	PoE converter power supply slot	**2**	Fan tray
3	Bezel		

Remove PoE Power Supply Slot Filler

Step 1 Remove the bezel and fan tray from the router.

Step 2 Loosen the screws from the securing nuts on the chassis. See Figure 5-46 for details.

Step 3 Gently pull out the filler from the filler tab on the chassis.

Figure 5-46 Install or Remove PoE Fillers

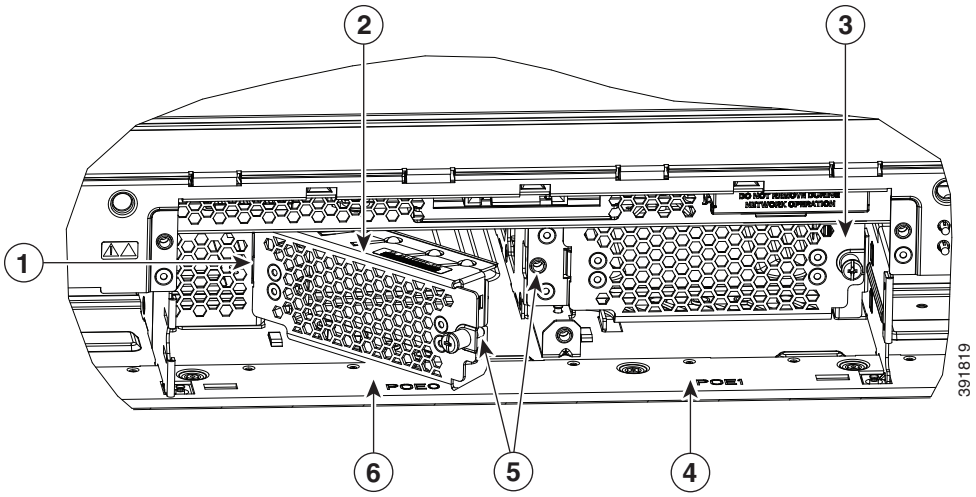

1	Install tab into slot on chassis	**2**	POE filler being installed in PoE slot 0
3	PoE filler shown installed in PoE slot 1	**4**	PoE slot 1
5	Rotate to secure screw into securing nut in chassis	**6**	PoE slot 0

Install the PoE Converter Power Supply

Step 1 Remove the bezel and fan try from the router chassis. See Replace Fan Tray, page 5-62.

Step 2 Remove the PoE converter power supply filler. For instructions, see "Remove PoE Power Supply Slot Filler".

Step 3 Open the slot latch before inserting the PoE converter power supply module.

Step 4 Rotate latch to close it.

Step 5 Tighten the screws on the module to secure it to the router chassis.See Figure 5-47 for details.

Remove PoE Converter Power Supply

Step 1 Remove the bezel and fan try from the router chassis.

Open the slot latch. See Figure 5-47 for details.

Step 2 Remove the PoE converter power supply module.

Step 3 Replace PoE converter power supply filler. See "Remove PoE Power Supply Slot Filler" section for details.

After you remove the PoE converter PSU, you need to either install a replacement power or put the filler.

Install the PoE Power Supply Slot Filler

You cannot keep the slot empty, you need to install the filler.

Step 1 Remove the bezel and fan tray from the router.

Step 2 Insert the filler tab into the slot on the chassis.

Step 3 Tighten the screws into the securing nuts on the chassis. See Figure 5-46 for details.

Figure 5-47 Install the PoE Converter Power Supply

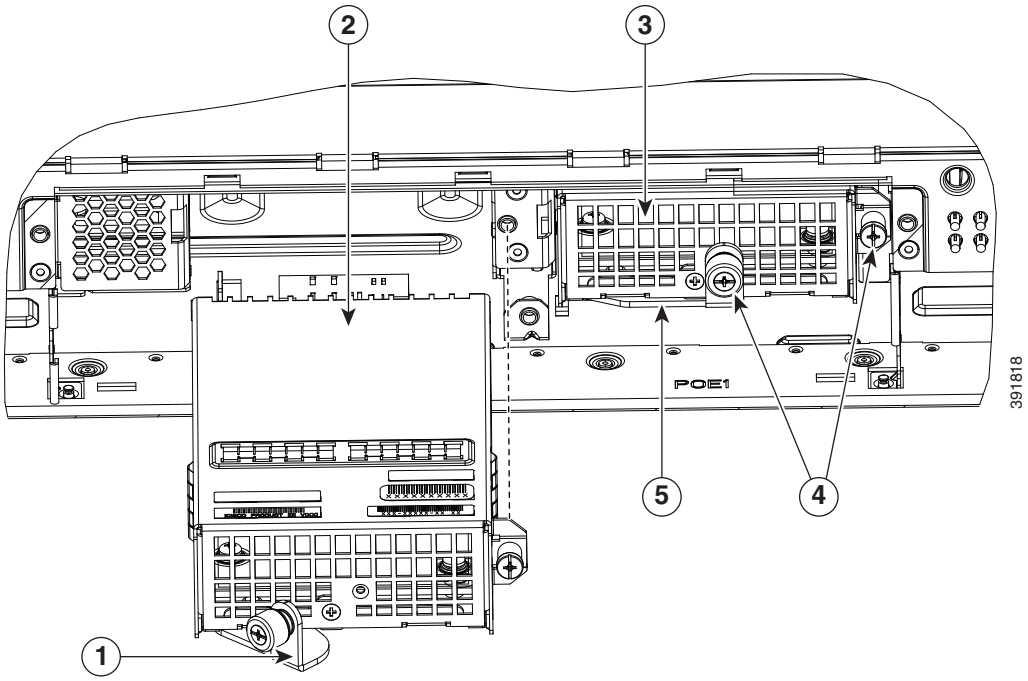

1	Latch to secure module (shown open).	**2**	PoE converter module being installed in PoE slot 0.
3	PoE converter module installed in PoE slot 1.	**4**	Screws to secure PoE module to router chassis.
5	Latch to secure PoE converter module (shown closed).		

Warning **Care should be taken while removing the power supplies and power inverters (especially in boost mode of operation). If the total power consumption is higher than can be supported by one power supply alone and in this condition a power supply is removed, the hardware can be damaged. This may then result in the system being unstable or unusable.**

The following messages are displayed as expected when you try to reload or insert a PoE supply in a router with Ethernet Switch Network Module:

```
*Jul 21 22:35:23.868: %IOSXE_PEM-6-INSPEM_FM: PEM/FM slot POE0 inserted
```

Upon PoE converter power supply insertion, the inline power supply restores automatically in the router. After the insertion, resets are needed for the switch modules in the router for the PoE supply to work properly.

If there are two PoE supplies, the power supplies can operate in a boost mode or redundant mode. In a boost mode, the total power supplied is a sum of the two power supplies capacity. In a redundant mode, if one of the PoE supply fails, the other PoE supplies power.

Replace a Fan Tray

The Cisco 4000 Series ISRs have hot-swappable fan trays that are field replaceable units (FRUs). The fan tray includes all router fans in one assembly. If a fan fails, replace the tray using a flat-blade or Phillips screwdriver.

Note The Cisco 4331 ISR and Cisco 4321 ISR do not have hot-swappable fan trays.

Before Hot-Swapping a Fan Tray

Before hot-swapping a fan tray, read the safety precautions below.

- Read the entire procedure and have the required tools available.
- Do not attempt the hot-swap in ambient air temperature above 90°F (32°C).
- Do not attempt the hot-swap at an altitude above 6000 feet (1829 meters).
- When the router is being operated, we recommend to change the fans in the router within 2 minutes to ensure the router does not overheat:

Replace Fan Tray

Note If hot-swapping the fan tray, we recommend to complete the operation within two minutes to ensure the router remains within operating temperature.

Note We recommend that you change the air filter every 3 months. However, examine the air filter once a month (or more often in dusty environments) and replace it if it appears to be excessively dirty or damaged. To comply with Telecordia GR-63-Core standard air filter requirements for NEBS deployment, the air filter must be replaced, not cleaned.

Step 1 Remove the bezel. The bezel is secured with snap latches. To remove the bezel, hold the top and bottom and pull the bezel.

Step 2 Completely loosen the three captive fan tray screws.

Step 3 Pull the fan tray out.

Step 4 Insert the replacement fan tray and tighten the three captive screws.

Step 5 Replace the bezel.

Figure 5-48 Cisco 4461 ISR4 Fan Tray

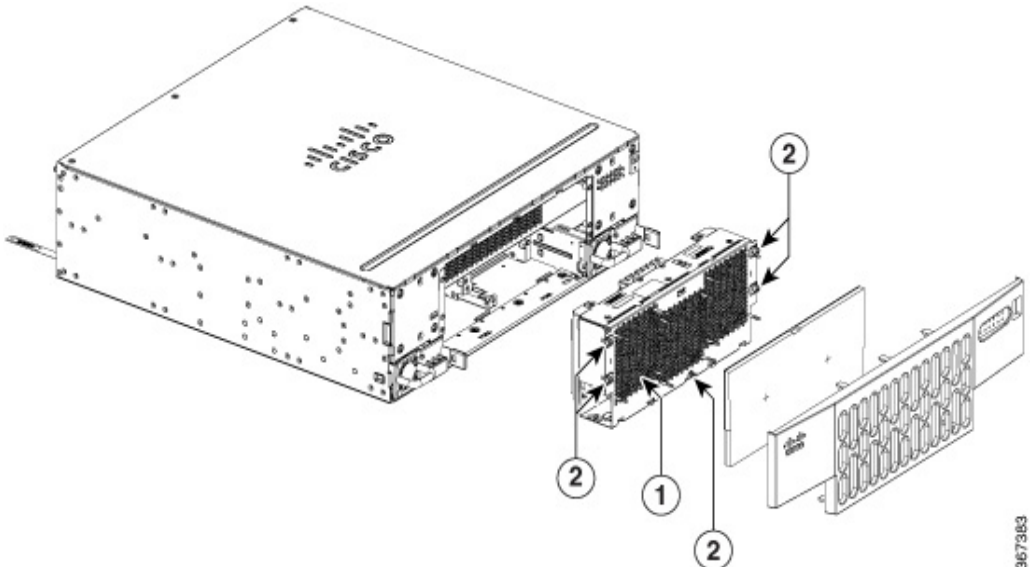

1	Fan tray	**2**	Captive screws

Figure 5-49 Cisco 4351 ISR4 Fan Tray

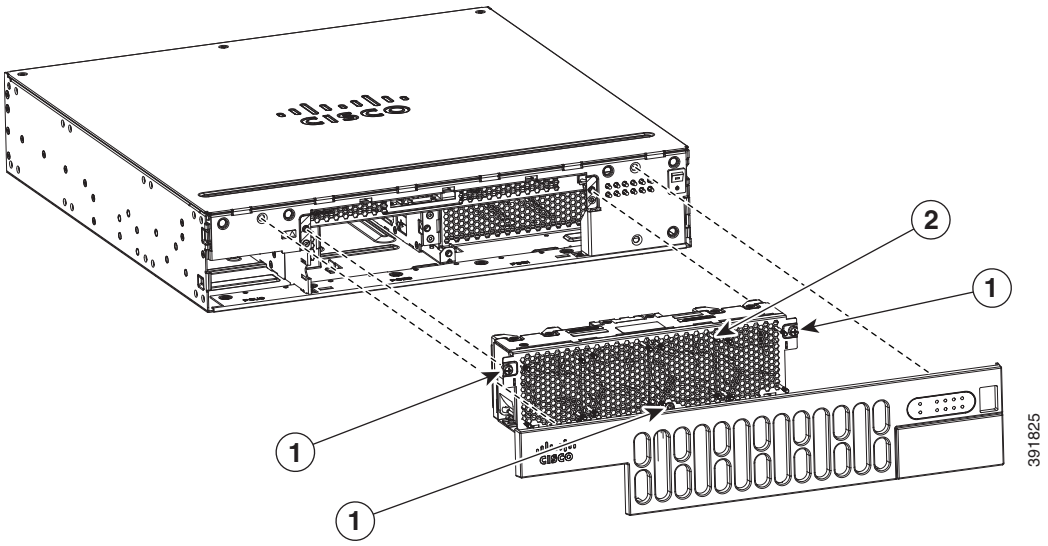

1	Captive screws	**2**	Fan tray

Figure 5-50 Cisco 4431 ISR Fan Tray

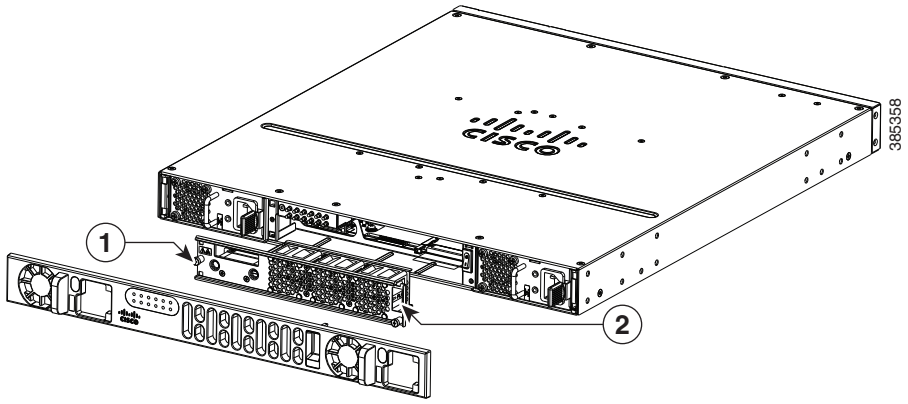

1	Captive screws	2	Fan tray

Replace Fan Tray on Cisco 4331 ISR

Step 1 Remove the four cover screws from the top of the chassis.

Note The length of the cover screw on top of the chassis is shorter.

Step 2 Remove the two cover screws from each side of the chassis, and lift the cover away from the router chassis. See Figure 5-51.

Step 3 Remove the fan connectors from the motherboard. See Figure 5-52.

Step 4 Press the spring-lock on both the sides of the fan tray to release the spring-lock.

Step 5 Pull the fan tray up to disengage from the slot. See Figure 5-51.

Step 6 Insert the replacement fan tray and gently push down until the spring-lock is latched and fully engaged onto the slot.

Step 7 Connect the fan connectors on the motherboard. See Figure 5-52.

Note The connectors are polarized or keyed to allow easy insertion in only one orientation. Orient the connectors correctly before you insert them. Incorrect orientation can damage connector pins.

Step 8 Turn on the system power, and verify that the fan tray is functioning normally.

Step 9 Turn off the system power before you cover over the chassis.

Step 10 Center the cover over the chassis and lower it onto the chassis.

Step 11 Install the four cover screws (torque 5 to 6 in-lb) on the top of the chassis, and install the two cover screws (torque 5 to 6 in-lb) on each side of the chassis. See Figure 5-51.

Figure 5-51 Cisco 4331 ISR Fan Tray

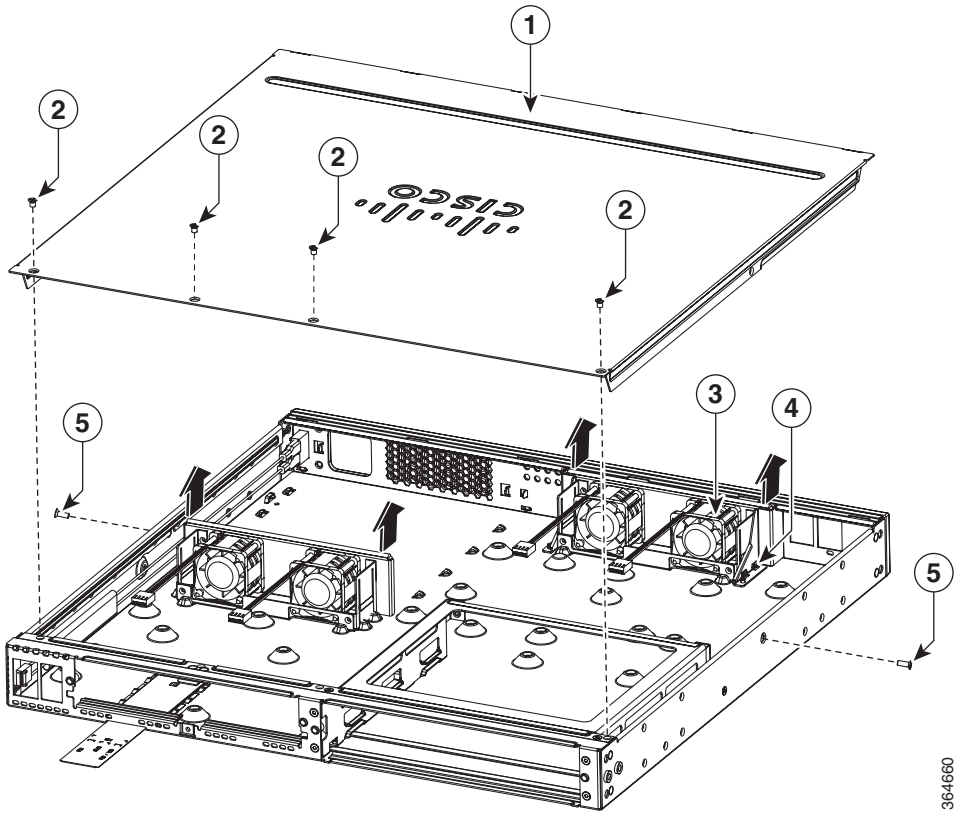

1	Chassis cover	**3**	Fan tray
2	Cover screws (4)	**4**	Spring-lock
5	Cover screws on the side of the chassis (2)		

Figure 5-52 Cisco 4331 ISR Fan Connectors

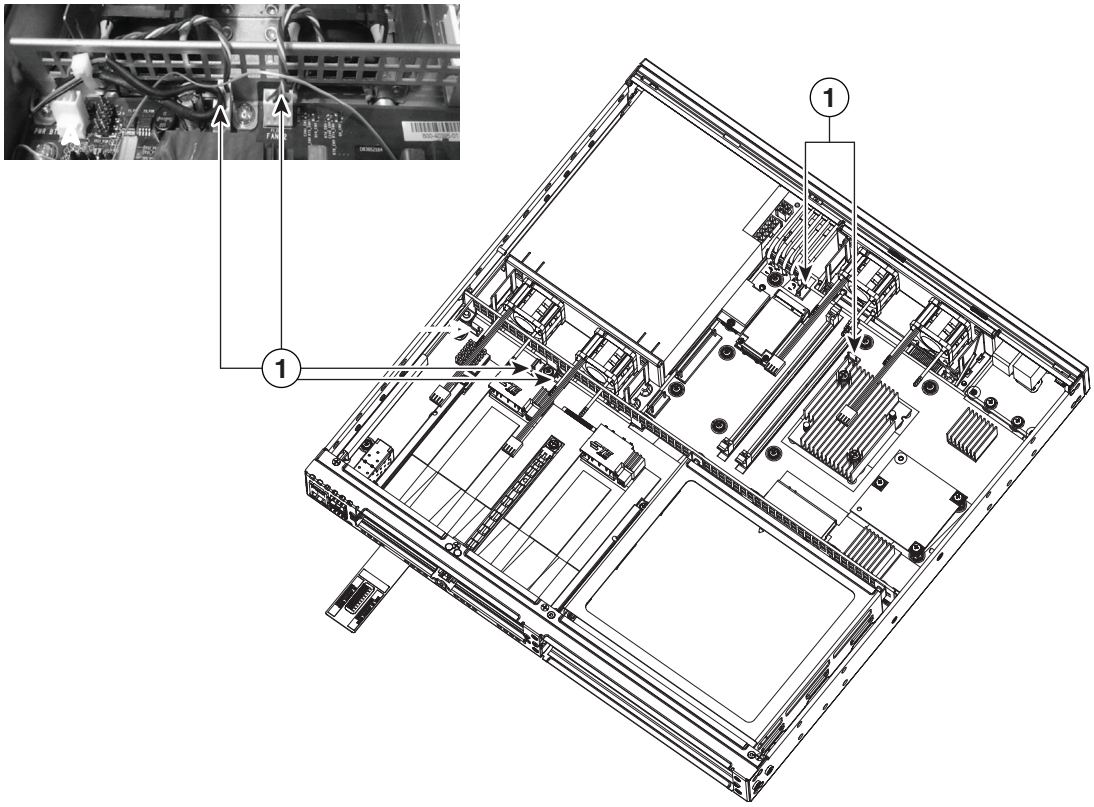

1	Fan connectors (2)		

Figure 5-53 Cisco 4331 ISR Fan Tray

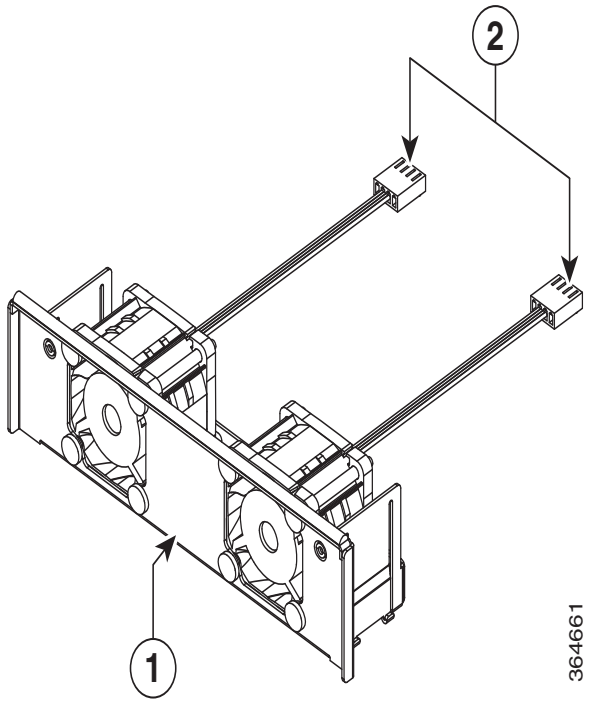

1	Fan tray	**2**	Fan connectors

Replace Fan Blower on Cisco 4321 ISR

Step 1 Read the "Safety Warnings" section, and disconnect the power supply before you replace any module.

Step 2 Remove the screws (5X) on the I/O module and both sides of the chassis. See Figure 5-54.

Step 3 Remove the chassis cover by lifting the front edge, hinging toward the back. See Figure 5-55.

Step 4 Disconnect the blower cable connection and remove the screws (2x) that secures the fan blower to the motherboard. See Figure 5-56

Step 5 Remove the fan blower from the motherboard. Use the flat-head screwdriver to disengage the fan blower from the slot. Ensure that you do not damage the motherboard when you disengage the fan blower from the slot. See Figure 5-57

Step 6 Remove the blue vibration isolator from the motherboard. See Figure 5-58.

Step 7 Install the new blue vibration isolator and then the fan blower onto the motherboard.

Step 8 Secure the fan blower onto the motherboard with 2 existing or new screws. Tighten the screws with a Phillips screwdriver. (torque 4 to 6 in-lbs). See Figure 5-54.

Note Ensure that you do not over tighten the screws as the isolator underneath the screws can be damaged.

Step 9 Install the chassis cover by hinging from the back. See Figure 5-55.

Step 10 Secure the screws (5x) on the I/O module and both sides of the chassis (torque 5 to 6 in-lb).

Figure 5-54 Cisco 4321 ISR Chassis

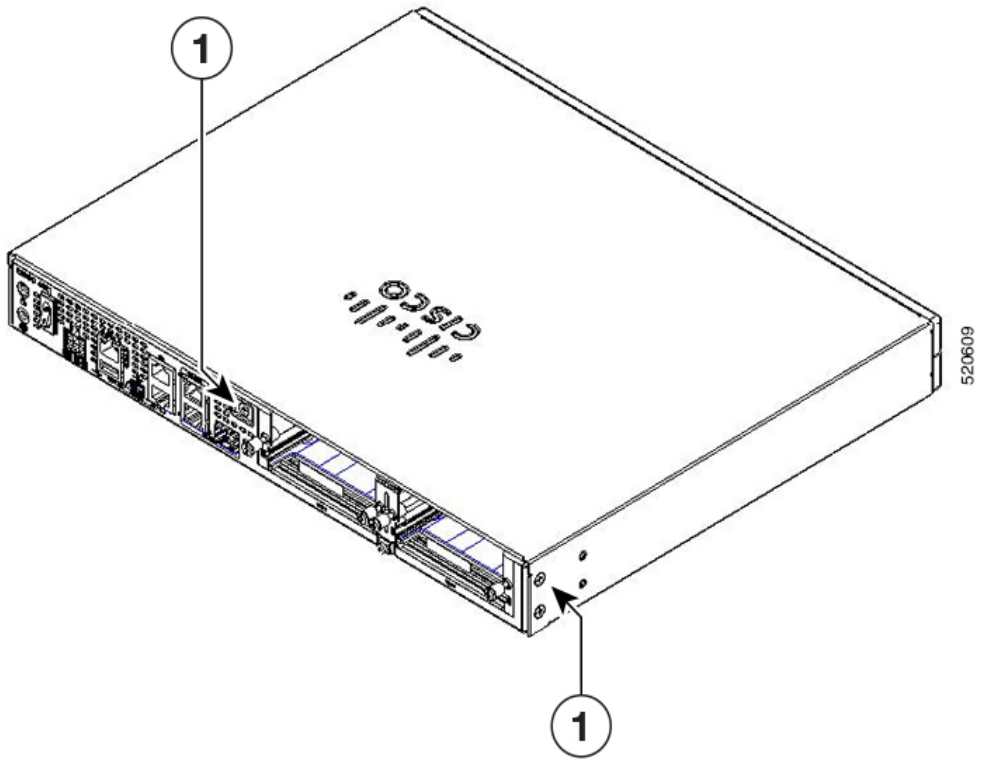

1	Cover screws on the side of the chassis (2)		

Figure 5-55 Cisco 4321 ISR Chassis Cover



1	Chassis Cover		

Figure 5-56 Cisco 4321 ISR Blower



1	Screws	2	Blower Cable Connectors

Figure 5-57 Cisco 4321 ISR Blower



1	Blower	2	Blower Cable Connectors

Figure 5-58 Cisco 4321 ISR Vibration Isolator

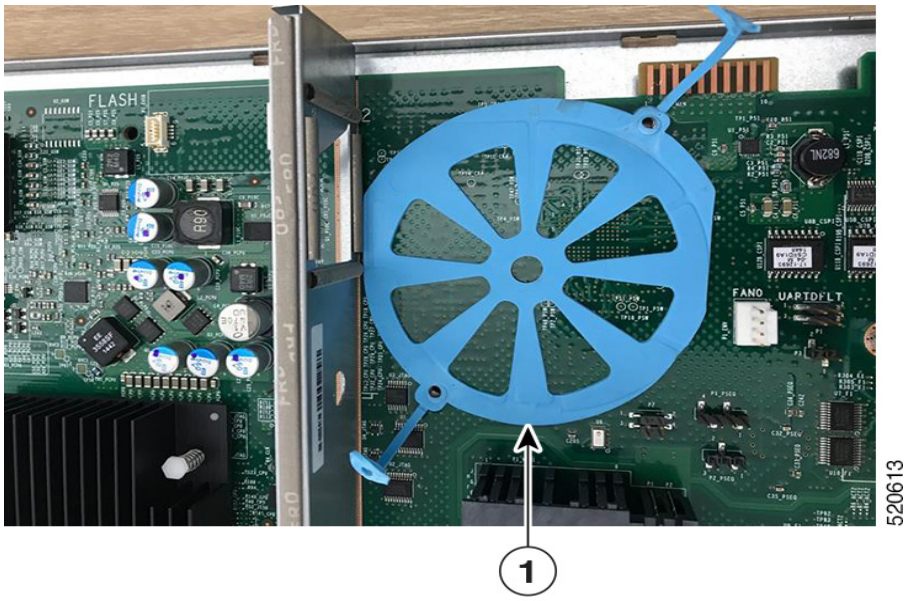

1	Vibration Isolator		

Remove and Install a CompactFlash Memory Card or eMMC Flash Card

This section describes installing and replacing CompactFlash (CF) or eMMC memory cards in the router. It contains the following sections:

- Prevent Electrostatic Discharge Damage, page 5-72
- Remove the CompactFlash or eMMC Memory Card, page 5-72
- Install the CompactFlash or eMMC Memory Card, page 5-73

Note You must turn off the power supply to the router to replace a CompactFlash Memory card. A CompactFlash memory card must be inserted in order to run a Cisco IOS XE software image

Note Depending on the model that you have purchased, the routers use a CompactFlash, or an eUSB flash for the internal bootflash memory. Cisco 4431 ISRs have a eMMC flash device. The device supports 8GB, 16GB, or 32 GB. The latest model of Cisco 4451x ISRs support both eUSB and CompactFlash. If a CompactFlash is installed, it will disable the eUSB. However, you can use the old CompactFlash that is available with the routers.

Prevent Electrostatic Discharge Damage

CF memory cards are sensitive to electrostatic discharge (ESD) damage, which can occur when electronic cards or components are handled improperly. ESD results in complete or intermittent failures.

To prevent ESD damage, follow these guidelines:

- Always use an ESD wrist or ankle strap and ensure that it makes good skin contact.
- Connect the equipment end of the strap to an unfinished chassis surface.
- Place CF memory cards on an antistatic surface or in a static shielding bag. If the card is to be returned to the factory, immediately place it in a static shielding bag.
- Avoid contact between the card and clothing. The wrist strap protects the card from ESD voltages on only the body; ESD voltages on clothing can still cause damage.
- Do not remove the wrist strap until the installation is complete.

Caution For safety, periodically check the resistance value of the antistatic strap. The measurement should be between 1 and 10 megohms (Mohms).

Remove the CompactFlash or eMMC Memory Card

Caution Do not remove a CF memory card from the chassis while it is being accessed. We recommend that you don not remove the CF when in Cisco IOS-XE. Either power the system off, or fall back to the rommon prompt if remove the CF.

Step 1 Read the "Safety Warnings" section on page 5-2 section and disconnect the power supply before you replace any module.

Step 2 Remove the bezel.

Step 3 Remove the fan tray. For instructions on removing the fan tray, see "Replace Fan Tray" section on page 5-62.

Step 4 Remove the CF or eMMC cover by placing a flat-blade screwdriver in the slot and pushing sideways against the tensioner to release the cover door.

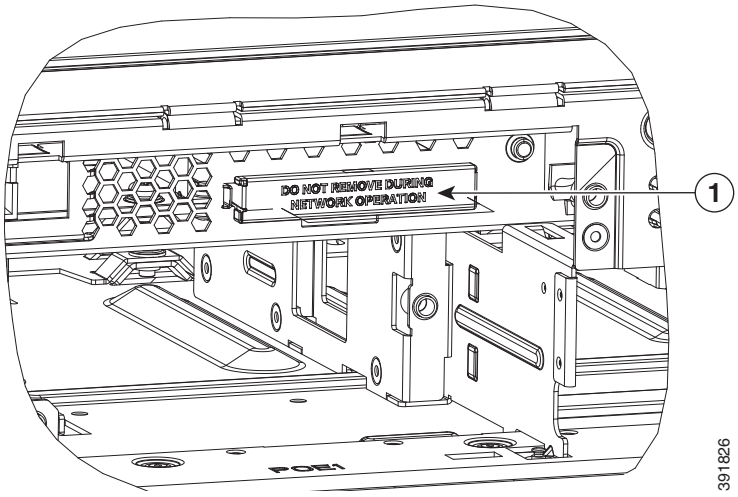

1	Compact flash cover

Step 5 Press the ejector button next to the CompactFlash or eMMc memory card. The ejector button moves outward so that it projects from the panel.

Step 6 Press the ejector button again. This ejects the CompactFlash or eMMC memory card partially out of its slot.

Step 7 Pull the CF or eMMC memory card out of its slot.

Step 8 Push the ejector button in until the button is flush with the bezel.

Caution To prevent damage to the ejector mechanism, the ejector button must remain pressed all the way in (flush against the bezel) when not being used to eject a CompactFlash or eMMC memory card.

Step 9 Replace the fan tray and then the bezel.

Install the CompactFlash or eMMC Memory Card

The CompactFlash memory upgrade is supported only on Cisco 4451 ISR. The Cisco 4431 ISR, Cisco 4461 ISR, and Cisco 4300 Series ISRs support the eUSB flash memory upgrade. Also, Cisco 4431 ISR, Cisco 4461 ISR, and Cisco 4300 Series ISRs do not have a CompactFlash memory slot on the chassis. After installing the eUSB flash memory upgrade, the software does not detect the on-board eMMC flash memory card.

Note The Cisco 4200 does not support CopactFlash memory upgrade and it uses the default 8GB eMMC memory card.

Step 1 Read the "Safety Warnings" section on page 5-2 and disconnect the power supply before you replace any module.

Step 2 Remove the fan tray. For instructions on removing the fan tray, see "Replace Fan Tray" section on page 5-62.

Step 3 Make sure that the ejector button is fully seated until it is flush with the bezel.

Note If the ejector button is projecting out from the panel, push it in until it is flush with the bezel.

Step 4 Insert the CompactFlash memory card into the slot until it is fully seated. The ejector button remains flush with the panel.

Note If the ejector button is projecting from the panel after you insert the CompactFlash memory card, remove the CompactFlash memory card, press the ejector button until it clicks, and reinsert the CompactFlash memory card.

Caution To prevent damage to the ejector mechanism, the ejector button must remain fully seated when not being used to eject a CompactFlash memory card.

Step 5 Replace the CompactFlash cover by inserting the cover lip into the chassis and pushing the cover to snap it back into place.

Step 6 Replace the fan tray.

Remove and Install the Flash Memory Card

This section describes installing and replacing flash memory cards in the router. It contains the following sections:

- Prevent Electrostatic Discharge Damage, page 5-72
- Install the Flash Memory Card, page 5-75
- Remove the Flash Memory Card, page 5-77

Prevent Electrostatic Discharge Damage

Flash memory cards are sensitive to electrostatic discharge (ESD) damage, which can occur when electronic cards or components are handled improperly. ESD results in complete or intermittent failures.

To prevent ESD damage, follow these guidelines:

- Always use an ESD wrist or ankle strap, and ensure that it makes good skin contact.
- Connect the equipment end of the strap to an unfinished chassis surface.
- Place flash memory cards on an antistatic surface or in a static shielding bag. If the card is to be returned to the factory, immediately place it in a static shielding bag.

- Avoid contact between the card and clothing. The wrist strap protects the card from ESD voltages on only the body; ESD voltages on clothing can still cause damage.
- Do not remove the wrist strap until the installation is complete.

Caution For safety, periodically check the resistance value of the antistatic strap. The measurement should be between 1 and 10 megohms (Mohms).

Install the Flash Memory Card

Step 1 Read the "Safety Warnings" section on page 5-2 and disconnect the power supply before you replace any module.

Step 2 Remove the chassis cover. For instructions on removing the chassis cover, see "Remove and Replace Chassis Cover" section on page 5-4.

Step 3 Place the flash memory card on top of the flash memory card connector (see Figure 5-59).

Figure 5-59 Memory Cards

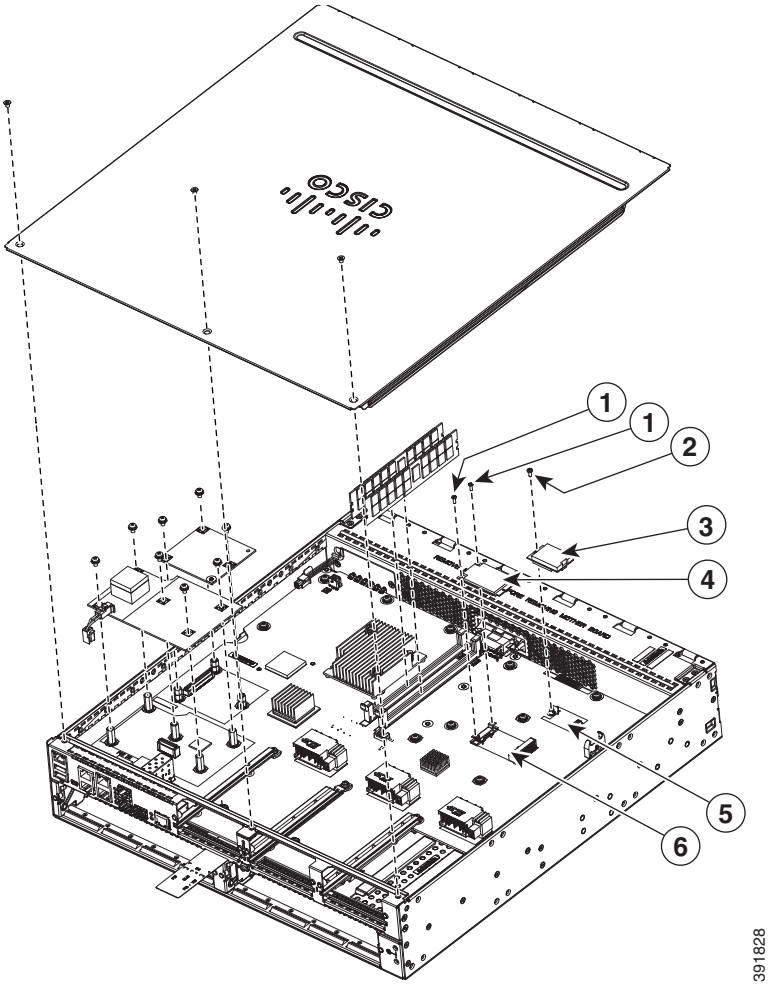

1	Supplied screw	**2**	Supplied screw
3	Flash memory card	**4**	SSD mSATA storage device
5	Flash memory card connector	**6**	SSD mSATA connector

Step 4 Tighten the supplied screw (see Figure 5-59) to secure the flash memory card in place.

Step 5 Replace the chassis cover. See "Remove and Replace Chassis Cover" section on page 5-4.

Remove the Flash Memory Card

Step 1 Read the "Safety Warnings" section on page 5-2, and disconnect the power supply before you replace any module.

Step 2 Remove the chassis cover. For instructions on removing the chassis cover, see "Remove and Replace Chassis Cover" section on page 5-4.

Step 3 Unscrew the flash memory card, see Figure 5-59.

Step 4 Install a new flash memory card if needed. See Install the Flash Memory Card, page 5-75.

Step 5 Replace the chassis cover. See "Remove and Replace Chassis Cover" section on page 5-4.

Install and Remove an SSD mSATA Storage Device

This section describes installing and replacing an SSD mSATA storage device in Cisco 4300 ISR routers.

- Prevent Electrostatic Discharge Damage, page 5-72
- Install the SSD mSATA Storage Device, page 5-78
- Remove the SSD mSATA Storage Device, page 5-79

Prevent Electrostatic Discharge Damage

The SSD mSATA storage devices are sensitive to electrostatic discharge (ESD) damage, which can occur when electronic cards or components are handled improperly. ESD results in complete or intermittent failures.

To prevent ESD damage, follow these guidelines:

- Always use an ESD wrist or ankle strap and ensure that it makes good skin contact.
- Connect the equipment end of the strap to an unfinished chassis surface.
- Place the SSD mSATA storage devices on an antistatic surface or in a static shielding bag. If the device is to be returned to the factory, immediately place it in a static shielding bag.
- Avoid contact between the device and clothing. The wrist strap protects the device from ESD voltages on only the body; ESD voltages on clothing can still cause damage.
- Do not remove the wrist strap until the installation is complete.

Caution For safety, periodically check the resistance value of the antistatic strap. The measurement should be between 1 and 10 megohms (Mohms).

Install the SSD mSATA Storage Device

To install a SSD mSATA storage device:

Step 1 Read the "Safety Warnings" section on page 5-2 and disconnect the power supply before you replace any module.

Step 2 Remove the chassis cover. For instructions on removing the chassis cover, see "Remove and Replace Chassis Cover" section on page 5-4.

Step 3 Place the SSD mSATA storage device on the SSD mSATA connector and align the device's contact edge with the corresponding socket in the connector.

Step 4 Press the device downward into the connector until it is level with the surface of the connector.

Step 5 While holding the device down, screw the device into place (see Figure 5-60).

Figure 5-60 Flash Memory Card and SSD mSATA Storage Device Locations

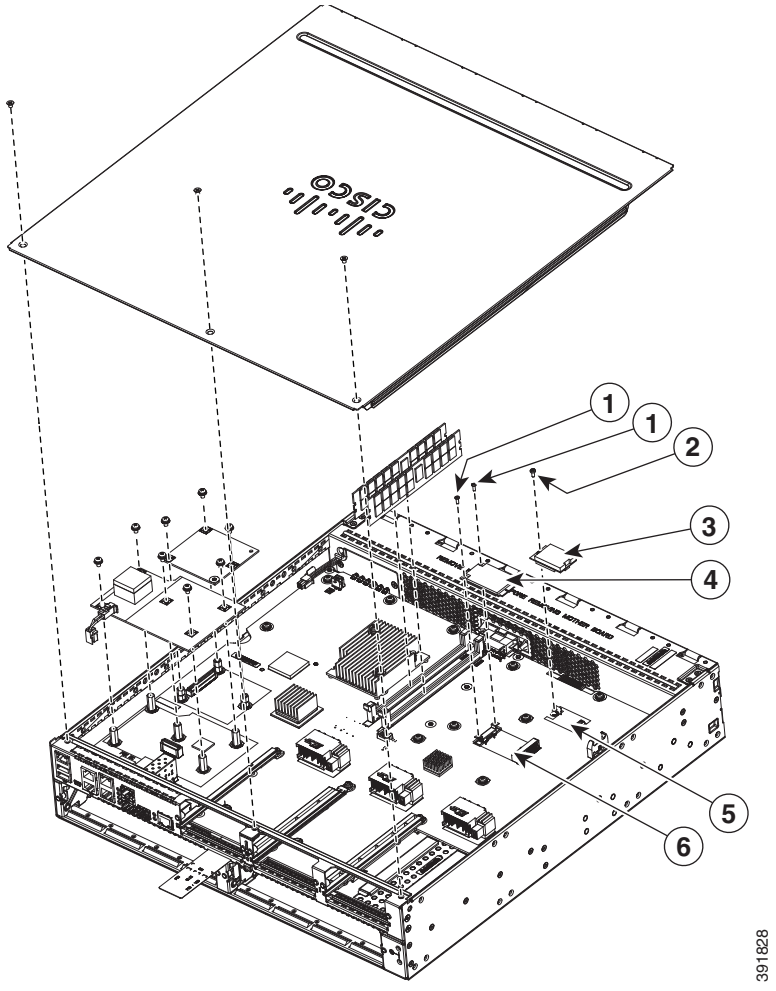

1	Supplied screw	**2**	Supplied screw
3	Flash memory card	**4**	SSD mSATA storage device
5	Flash memory card connector	**6**	SSD mSATA connector

Step 6 Replace the chassis cover. See "Remove and Replace Chassis Cover" section on page 5-4.

Remove the SSD mSATA Storage Device

Step 1 Read the "Safety Warnings" section on page 5-2, and disconnect the power supply before you replace any module.

Step 2 Remove the chassis cover. For instructions on removing the chassis cover, see "Remove and Replace Chassis Cover" section on page 5-4.

Step 3 Unscrew the screws that attach the SSD mSATA storage device to the chassis. See Figure 5-59.

Step 4 The card should popup after the screws are removed.

Step 5 Install a new SSD mSATA memory device if needed. See Install the SSD mSATA Storage Device, page 5-78.

Step 6 Replace the chassis cover. See "Remove and Replace Chassis Cover" section on page 5-4.

Install and Remove SFP Modules

This section describes how to install optional small-form-factor pluggable (SFP) modules in the router to provide optical Gigabit Ethernet connectivity.

The SFP module installs into a slot on the router rear panel. When selected in Cisco IOS software, it is assigned port **gigabitethernet 0/0/0**. The default is the built-in RJ-45 1000Base-T connector, which is enabled on this port.

Only SFP modules certified by Cisco are supported on the routers. Table 5-4 lists SFPs supported on the router.

See *Cisco Transceiver Modules Compatibility Information* for compatibility issues.

Table 5-4 SFPs Supported on the Router

Cisco Model Number	SFP Transceiver	Fiber Diameter (micrometer)	Wavelength (nm)	Mode	Maximum Distance
GLC-SX-MM=	1000Base-SX	50	850	Multi	550 m
GLC-LH-SM-X=	1000Base-LX/LH	9/125	1310	Single	10 km
GLC-ZX-SM-X=	1000Base-ZX	9/125	1550	Single	100 km
CWDM-SFP-1470=	1000Base-CWDM	50	1470	Single	100 km
CWDM-SFP-1490=			1490		
CWDM-SFP-1510=			1510		
CWDM-SFP-1530=			1530		
CWDM-SFP-1550=			1550		
CWDM-SFP-1570=			1570		
CWDM-SFP-1590=			1590		
CWDM-SFP-1610=			1610		
DWDM-SFP-3033	1000BASE-DWDM	—	1530.33	—	—
DWDM-SFP-3112	1000BASE-DWDM	—	1531.12	—	—
DWDM-SFP-3190	1000BASE-DWDM	—	1531.90	—	—
DWDM-SFP-3268	1000BASE-DWDM	—	1532.68	—	—
DWDM-SFP-3425	1000BASE-DWDM	—	1534.25	—	—
DWDM-SFP-3504	1000BASE-DWDM	—	1535.04	—	—
DWDM-SFP-3582	1000BASE-DWDM	—	1535.82	—	—
DWDM-SFP-3661	1000BASE-DWDM	—	1536.61	—	—
DWDM-SFP-3819	1000BASE-DWDM	—	1538.19	—	—
DWDM-SFP-3898	1000BASE-DWDM	—	1539.77	—	—
DWDM-SFP-3977	1000BASE-DWDM	—	1539.98	—	—
DWDM-SFP-4056	1000BASE-DWDM	—	1540.56	—	—
DWDM-SFP-4214	1000BASE-DWDM	—	1542.14	—	—
DWDM-SFP-4294	1000BASE-DWDM	—	1542.94	—	—
DWDM-SFP-4373	1000BASE-DWDM	—	1543.73	—	—

Table 5-4 SFPs Supported on the Router (continued)

Cisco Model Number	SFP Transceiver	Fiber Diameter (micrometer)	Wavelength (nm)	Mode	Maximum Distance
DWDM-SFP-4453	1000BASE-DWDM	—	1544.53	—	—
DWDM-SFP-4612	1000BASE-DWDM	—	1546.12	—	—
DWDM-SFP-4692	1000BASE-DWDM	—	1546.92	—	—
DWDM-SFP-4772	1000BASE-DWDM	—	1547.72	—	—
DWDM-SFP-4851	1000BASE-DWDM	—	1548.51	—	—
DWDM-SFP-5012	1000BASE-DWDM	—	1550.12	—	—
DWDM-SFP-5092	1000BASE-DWDM	—	1550.92	—	—
DWDM-SFP-5172	1000BASE-DWDM	—	1551.72	—	—
DWDM-SFP-5252	1000BASE-DWDM	—	1552.52	—	—
DWDM-SFP-5413	1000BASE-DWDM	—	1554.13	—	—
DWDM-SFP-5494	1000BASE-DWDM	—	1554.94	—	—
DWDM-SFP-5575	1000BASE-DWDM	—	1555.75	—	—
DWDM-SFP-5655	1000BASE-DWDM	—	1556.55	—	—
DWDM-SFP-5817	1000BASE-DWDM	—	1558.17	—	—
DWDM-SFP-5898	1000BASE-DWDM	—	1558.98	—	—
DWDM-SFP-5979	1000BASE-DWDM	—	1559.79	—	—
DWDM-SFP-6061	1000BASE-DWDM	—	1560.61	—	—
GLC-BX-D			1490 TX	—	—
			1310 RX	—	—
GLC-BX-U			1310 TX	—	—
			1490 RX	—	—
GLC-FE-100FX	—	—	1310	Multi	2 km
GLC-FE-100LX	—	—	1310	Single	10 km
GLC-FE-100EX	100BASE-FX	—	1310	Single	40 km
GLC-FE-100ZX	100BASE-ZX	—	1550	Single	80 km
GLC-FE-100BX-U			1310 TX	Single	10 km
			1550 RX		
GLC-FE-100BX-D			1550 TX	Single	10 km
			1310 RX		
GLC-GE-100FX	—	—	1310	Multi	2 km

Tip Use the **show controller** command at the Cisco IOS prompt to determine whether you are using an SFP certified by Cisco.

Install SFPs

Laser Safety Guidelines

Optical SFPs use a small laser to generate the fiber-optic signal. Keep the optical transmit and receive ports covered whenever a cable is not connected to the port.

Warning **Ultimate disposal of this product should be handled according to all national laws and regulations.** Statement 1040

To install an SFP module in your router:

Step 1 Read the "Safety Warnings" section on page 5-2 section, and disconnect the power supply before you replace any module.

Step 2 Slide the SFP into the router connector until it locks into position (see Figure 5-61).

Tip If the SFP uses a bale-clasp latch (see Figure 5-61), the handle should be on top of the SFP module.

Figure 5-61 Install an SFP Module

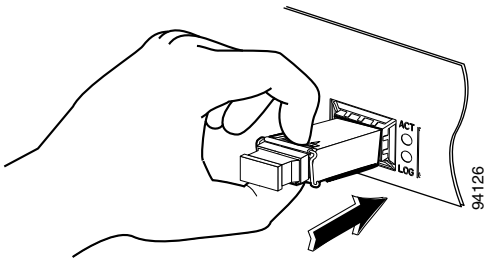

Caution Do not remove the optical port plugs from the SFP until you are ready to connect cabling.

Step 3 Connect the network cable to the SFP module.

Remove SFP Modules:

Step 1 Read the "Safety Warnings" section on page 5-2 section, and disconnect the power supply before you replace any module.

Step 2 Disconnect all cables from the SFP.

Caution The latching mechanism used on many SFPs locks the SFP into place when cables are connected. Do not pull at the cabling in an attempt to remove the SFP.

Step 3 Disconnect the SFP latch. See Figure 5-62.

Note SFP modules use various latch designs to secure the module in the SFP port. Latch designs are not linked to SFP model or technology type. For information on the SFP technology type and model, see the label on the side of the SFP.

Figure 5-62 Disconnect SFP Latch Mechanisms

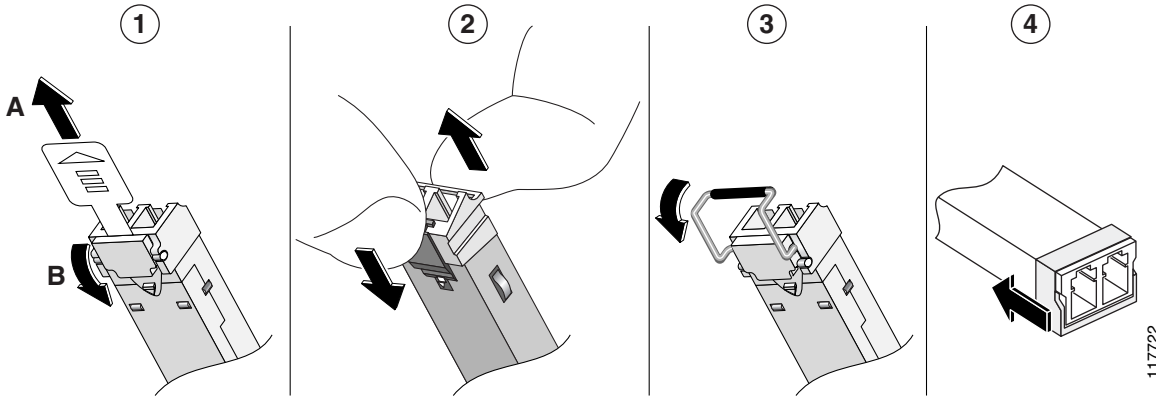

1	Sliding latch	**3**	Bale-clasp latch
2	Swing and slide latch	**4**	Plastic collar latch

Tip Use a pen, screwdriver, or other small straight tool to gently release a bale-clasp handle if you cannot reach it with your fingers.

Step 4 Grasp the SFP on both sides and remove it from the router.

Remove, Replace, and Install the Internal PoE Daughter Card

Step 1 Read the "Safety Warnings" section on page 5-2 and disconnect the power supply before you replace any module.

Step 2 Remove the five screws.

Step 3 Remove the power cable to motherboard.

Step 4 Access the PoE card slot. See the "Remove and Replace Chassis Cover" section on page 5-4.

Step 5 Locate the card to be removed or replaced. See Figure 5-63 for the location of the PoE card on the motherboard.

Figure 5-63 Location of the PoE Daughter Card (Shown: Cisco 4451-X ISR)

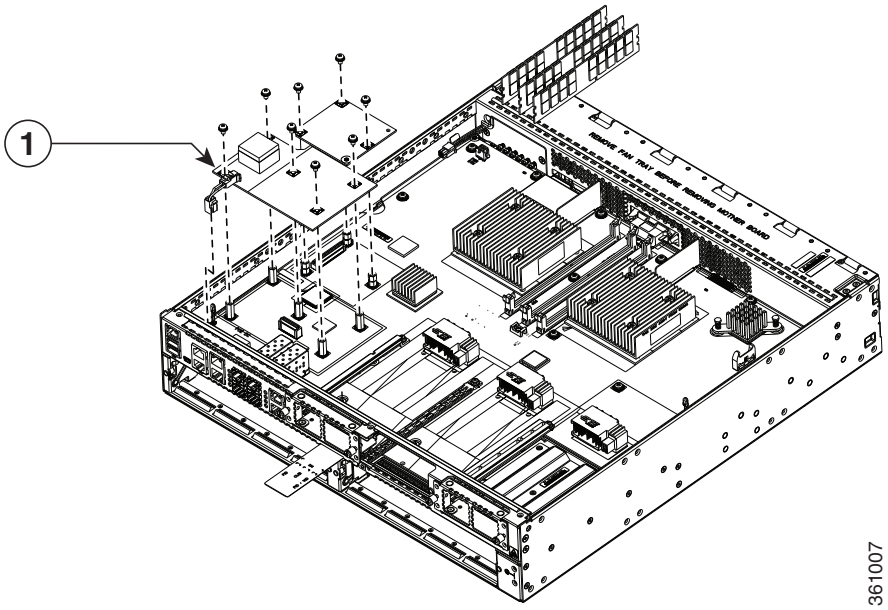

1	Location of the PoE card on the mother board.

Step 6 Pull the PoE daughter card out of the connector on the motherboard.
If you are replacing the card, insert the new PoE daughter card into the slot. Tighten the screws, and connect the power cable to the motherboard.

Step 7 Place the removed card in an antistatic bag to protect it from ESD damage.



Online Insertion and Removal and Hot-Swapping

The online insertion and removal (OIR) operation lets you replace faulty data and voice modules without affecting system operations. The OIR is similar to hot-swapping. OIR commands are issued before removing and after installing a module. When performing OIR, use an identical module to replace an original one. If you need to perform the OIR operation on multiple modules within a router, perform the operation one module at a time.

The difference between hot-swapping and OIR is that OIR requires executing Cisco IOS commands before and after the OIR. Hot-swapping is strictly a hardware function and does not require the execution commands. Not all router components or modules use OIR, or can be hot swapped.

The following components use OIR in the routers:

- Service Modules (SMs)
- Network Interface Modules (NIMs)
- SFPs
- USB devices

The following components can be hot swapped:

- Fan tray
- Power supply: only when the router is backed up with an optional PSU

Requirement

To issue OIR commands, you must keep the module that is to be replaced in EnergyWise full-power mode. If the module is in EnergyWise power-saving or shutdown mode, you cannot issue OIR commands, and you cannot, therefore, remove the module.

OIR Procedures

The following procedures describe using the OIR process to remove and replace data and voice modules.

Remove a Module

Note Ensure that the module is available before you issue the command to remove it.

From a console terminal run the **hw-module subslot** <*subslot*> **stop** command. The service module adapter LED blinks, turns off, and the console displays a prompt signaling the module can be removed.

See the following output:

```
Router# hw-module subslot 2/0 stop
Proceed with stop of module? [confirm]
damo-O2#
*Mar 22 20:43:31.088: %SPA_OIR-6-OFFLINECARD: SPA (SM-X-1T3/E3) offline in subslot 2/0
*Mar 22 20:43:31.088: %IOSXE_OIR-6-SOFT_STOPSPA: SPA(SM-X-1T3/E3) stopped in subslot 2/0,
interfaces disabled
Router# show hw-module subslot 2/0 oir
Module        Model                Operational Status
------------- -------------------- -----------------------
subslot 2/0   SM-X-1T3/E3          stopped
```

Insert a Module

You require to run this step only if you run the **oir-stop** command when the module is not physically removed from the slot. If the module is physically removed, you do not require to run this command.

From a console terminal issue the **hw-module sm {slot} oir-start** command**.** The console displays output that shows the module change states:

```
Router# hw-module sm 2 oir-start
Router#
*Nov 11 21:06:17.546: %ATMOC3POM-6-SFP_IN: Interface ATM2/0 OC3 MM SFP has been inserted.
Router#
*Nov 11 21:06:19.442: %LINK-3-UPDOWN: Interface ATM2/0, changed state to up
*Nov 11 21:06:20.442: %LINEPROTO-5-UPDOWN: Line protocol on Interface ATM2/0, changed
state to up
```

Hot-Swapping Procedures

The following items can be hot-swapped:

- Fan trays
- Power supplies only when the router is backed up with an RPS

For details of the hot-swapping procedures, see the "Replace a Fan Tray" section on page 5-62 and the "Remove and Replace Cisco 4000 Series ISRs Power Supplies" section on page 5-41.