OPTICON

Fixed Position 2D Scanner

F-31

This manual provides specifications for the F-31 fixed position 2D scanner.

Specifications Manual

All information subject to change without notice.

Document History

Model Number:	**F-31**	Specification Number:	**SS11007**
Edition:	**1st**	Original Spec Number:	**SS10013**
Date:	**2011-03-30**		

Copyright 2010 Opticon. All rights reserved.

This manual may not, in whole or in part, be copied, photocopied, reproduced, translated or converted to any electronic or machine readable form without prior written consent of Opticon.

Limited Warranty and Disclaimers

PLEASE READ THIS MANUAL CAREFULLY BEFORE INSTALLING OR USING THE PRODUCT.

Serial Number

A serial number appears on all Opticon products. This official registration number is directly related to the device purchased. Do not remove the serial number from your Opticon device. Removing the serial number voids the warranty.

Warranty

Unless otherwise agreed in a written contract, all Opticon products are warranted against defects in materials and workmanship for two years after purchase. Opticon will repair or, at its option, replace products that are defective in materials or workmanship with proper use during the warranty period. Opticon is not liable for damages caused by modifications made by a customer. In such cases, standard repair charges will apply. If a product is returned under warranty and no defect is found, standard repair charges will apply. Opticon assumes no liability for any direct, indirect, consequential or incidental damages arising out of use or inability to use both the hardware and software, even if Opticon has been informed about the possibility of such damages.

Packaging

The packing materials are recyclable. We recommend that you save all packing material to use should you need to transport your scanner or send it for service. Damage caused by improper packaging during shipment is not covered by the warranty.

Trademarks

Trademarks used are the property of their respective owners.

Opticon Inc. and Opticon Sensors Europe B.V. are wholly owned subsidiaries of OPTOELECTRONICS Co., Ltd., 12-17, Tsukagoshi 4-chome, Warabi-shi, Saitama, Japan 335-0002. TEL +81-(0) 48-446-1183; FAX +81-(0) 48-446-1184

SUPPORT

USA	Europe
Phone: 800-636-0090	
Email: support@opticonusa.com	**Email: support@opticon.com**
Web: www.opticonusa.com	**Web: www.opticon.com**

Revision History

Specification No. : SS11007
Product name : F-31

Edition	Date	Page	Section	Description of Changes
First	2011/03/30	-	-	Initial release

Contents

1. Abstract **6**
2. Overview **6**
3. Physical Features **6**
3.1. Dimensions 6
3.2. Weight 6
3.3. Installation 6
4. Electrical Specifications **7**
4.1. Configuration 7
4.2. Power Supply Characteristics 7
4.2.1. RS-232C 7
4.2.2. USB 7
5. Power Mode Transition **8**
6. Optical Specifications **9**
7. Technical Specifications **9**
7.1. Scan Range and Depth of Field 11
7.2. Print Contrast Signal (PCS) 12
7.3. Minimum Resolution 12
7.4. Pitch, Skew, and Tilt 12
7.5. Curvature 13
8. Environmental Specifications **14**
8.1. Temperature 14
8.2. Humidity 14
8.3. Ambient Light Immunity 14
8.4. Dust and Drip Proof 15
8.5. Electrostatic Discharge Immunity 15
8.6. Drop Impact Strength (without packaging) 15
8.7. Drop Impact Strength (in individual packaging) 15
8.8. Vibration Strength 15
8.9. Cable Strength 15
8.10. Cable Bending Strength 16
9. Interface Specifications **17**
9.1. RS-232C (9-pin) Interface 17
9.1.1. Setting 17
9.1.2. Signal Level 17
9.1.3. Pin Assignment 17
9.1.4. Interface Circuit 18
9.1.5. Character Format (for send / receive data) 18
9.1.6. Communication Format 18

9.1.7. Handshaking 19
9.2. RS-232C (10-pin) Interface 23
9.2.1. Signal Level 23
9.2.2. Signal Name and Wire Color 23
9.2.3. Interface Circuit 23
9.2.4. Sequencer Signal 24
9.3. USB Interface 26
9.3.1. Setting 26
9.3.2. Connector 26
9.3.3. USB Interface Circuit 26
10. Cable and Connector 27
10.1. RS-232C (9-pin) Cable 27
10.2. RS-232C (10-pin) Cable 27
10.3. USB Cable 28
10.4. Scanner Connector Specifications 28
11. Default Settings 29
12. Reliability 32
13. Regulatory Compliance 32
13.1. LED Safety 32
13.2. Laser Safety 32
13.3. Product Safety 32
13.4. EMC 32
14. RoHS 32
15. Precautions 33
15.1. Precaution against Laser Light 33
15.2. Handling 33
16. Product Label 34
17. Packaging Specifications 34
17.1. Individual Packaging Specifications 34
17.2. Collective Packaging Specifications 34
18. Auto Trigger 35
18.1. Outline of Operation 35
18.2. Settings 35
Appendix: Mechanical Drawing 36

1. Abstract

This manual provides the specifications for the F-31 fixed position auto-focus 2D scanner.

2. Overview

- A custom high-speed / high-sensitive CMOS image sensor with a maximum frame rate of 80 fps and the fastest shutter speed in the industry enable high speed scanning.
- Focus adjustment function using a liquid lens enables reading of high resolution codes and long depth of field.
- Laser ranging method plus the high-speed CMOS image sensor enables high speed autofocusing. When the ranging with laser light is impossible due to the environmental condition, contrast method is used for the focus adjustment.
- The latest codes such as GS1 DataBar (formerly called RSS), Aztec Code, EAN, UCC Composit barcode are supported.
- Code options, read options and communication settings can be configured by sending commands.
- The scanner can be connected to a host computer via serial communication interface to transmit commands from the host to the scanner and decoded data or image data from the scanner to the host.
- The F-31 is a RoHS compliant product, which is declared by Optoelectronics Co., Ltd.

3. Physical Features

3.1. Dimensions

58.0 x 46.0 x 24.5 (DWH mm)

Refer to “Appendix: Mechanical Drawings” for details.

3.2. Weight

50 g max.(Excluding cable)

3.3. Installation

Refer to “Appendix: Mechanical Drawings”.

4. Electrical Specifications

4.1. Configuration

The F-31 consists of
- a Camera module with CMOS sensor and lens integrated
- a Decode and Communication Control section, where 1D / 2D code data from a scanned image is decoded
- an Interface section, where exchanges information with host computer
- a Power Supply section, where the main power supply is converted

The USB model is bus powered and no adapter is needed. The RS-232C model needs power supply from an AC adapter (DC 5.0 / 6.0V) or from the host (DC 5.0V) .

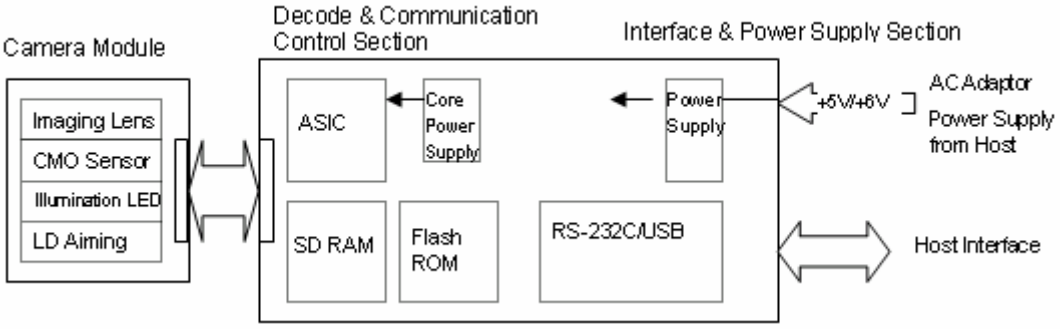

Figure 1: Configuration

4.2. Power Supply Characteristics

4.2.1. RS-232C

Power Supply Voltage	4.5 ~ 6.6V (Typ 6.0V)
Ripple	0.1Vp-p or less (sine wave 10Hz ~ 100kHz, power supply voltage 6.0V)
Current Consumption	(1) Standby Current: Average 48mA (Typ), Peak 55mA (Typ)
	(2) Operating Current: Average 140mA (Typ), Ppeak 180mA (Typ)
AC Adapter Output	DC 6.0V, 1A or higher

4.2.2. USB

Bus-Power (Class)	Hi Power (500mA max)
Ripple	0.1Vp-p or less (sine wave 10Hz ~ 100kHz, power supply voltage 5.0V)
Current Consumption	(1) Standby Current: Average 55mA (Typ), Peak 60mA (Typ)
	(2) Operating Current: Average 170mA (Typ), Peak 195mA (Typ)

5. Power Mode Transition

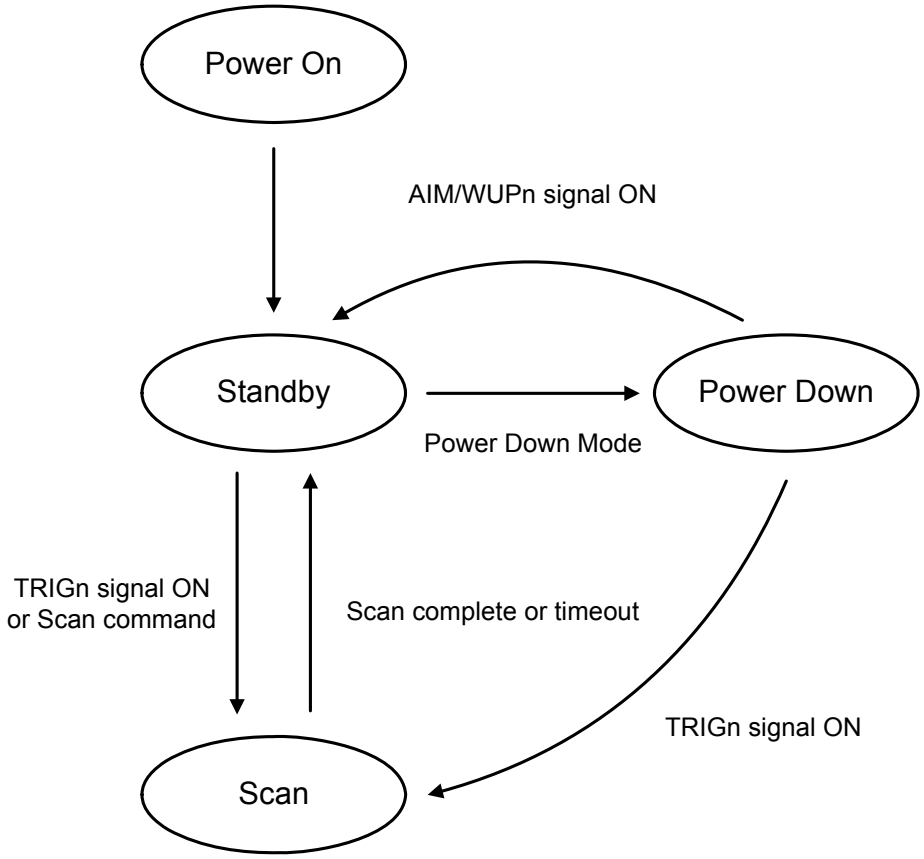

Figure 2: Power Mode Transition

*1 When “Power Down" mode is enabled, the F-30 automatically enters “Power Down” state after “Power On”.
*2 When "Power Down" mode is enabled and the F-30 is in “Standby” state, the F-30 goes to “Power Down” state after the time out period specified by power saving command has elapsed. (In case there are no events to move to other states,)
*3 “Power Down” state is not supported by the USB_VCP interface model. Because every time the F-30 enters "Power down" state, a USB device driver would get a disconnect message.

6. Optical Specifications

Item		Characteristics
Scan method	CMOS area sensor (white / black)	-
Number of effective pixel	(Column) × (Row)	900 × 512 dots
Image capture speed (*1)	Frame rate	80 fps
View angle	Horizontal	Approx. 40°
	Vertical	Approx. 23°
Auxiliary light source (LED × 1)	InGaIP red LED	-
	Peak wave length	645 nm
	Directivity angle: 2Φ 1/2 (*2)	30°
		60°
	Maximum radiation output (*3)	12600 lx
		5040 mcd
Light source for aiming / ranging (Laser diode)	Red laser diode	-
	Peak wave length	650 nm
	Maximum radiation output (*4)	390μW

Note:
*1: The fastest speed of image capture
*2: Reference value extracted from the datasheet
*3: Reference value based on the datasheet (25°C, IF = 50mA)
*4: Class 1 compliant output

7. Technical Specifications

Scanning is performed by aiming the laser light around the center of a code. For long distance scanning, ambient light entering the angle of view may affect the scanning performance. The conditions for technical specifications are as follows, unless otherwise specified in each section.

<Conditions>

Ambient Temperature and Humidity	: Room temperature, room humidity
Ambient Light	: 1000 ~ 1500 lx (on code surface)
Angles	: Pitch: α = 0°, Skew: β = 15°, Tilt: γ = 0°
Curvature	: R = ∞
Power Supply Voltage	: 5.0V
PCS (1D and 2D)	: 0.9 or higher
Reading Test	: Judge within 2 seconds per scan. Accept the performance with 70% success rate for 10 tries.
Bar Code Sample (1D and 2D)	: Specified below

Supported 1 D symbology

<Code 39>

Resolution	Symbology	PCS	Size (mm)	No. of Digits
0.0762mm	Code 39	0.9	8 × 10	5
0.127mm			11 × 10	4
0.254mm			14 × 10	2
1.0mm			56 × 30	

<JAN>

Resolution	Symbology	PCS	Size (mm)	No. of Digits
0.260mm	13-digit JAN	0.9/0.45	25 × 19	13
0.260mm	8-digit JAN	0.9	17.5 × 15.5	8
0.330mm	13-digit JAN	0.9	31.5 × 25.0	13

Supported 2 D symbology

<PDF417>

Resolution	Error Correction	PCS	Size (mm)	No. of Characters
0.254mm	Level-4	0.9/0.45	26 × 16.5	17
0.127mm		0.9	13 × 8	

<QR Code (Model-2)>

Resolution	Error Correction	PCS	Size (mm)	No. of Characters
0.381mm	M	0.9	12 × 12	44
0.169mm			5 x 5	
0.127mm			4 × 4	

<Data Matrix>

Resolution	Error Correction	PCS	Size (mm)	No. of Characters
0.254mm	ECC200	0.9	10 × 10	40
0.169mm			4 × 4	
0.127mm			3 × 3	

<MicroQR Code>

Resolution	Error Correction	PCS	Size (mm)	No. of Characters
0.212mm	L	0.9	5 × 5	11

- Code 39 (resolution 0.0762, 0.127, 1.0mm) and JAN codes used for the tests are OPTOELECTRONICS test samples. Others are printed by a normal printer.
- 1D bar code NW ratio = 1 : 1.25
- The sizes are the outline dimensions that do not include the quiet zone.

7.1. Scan Range and Depth of Field

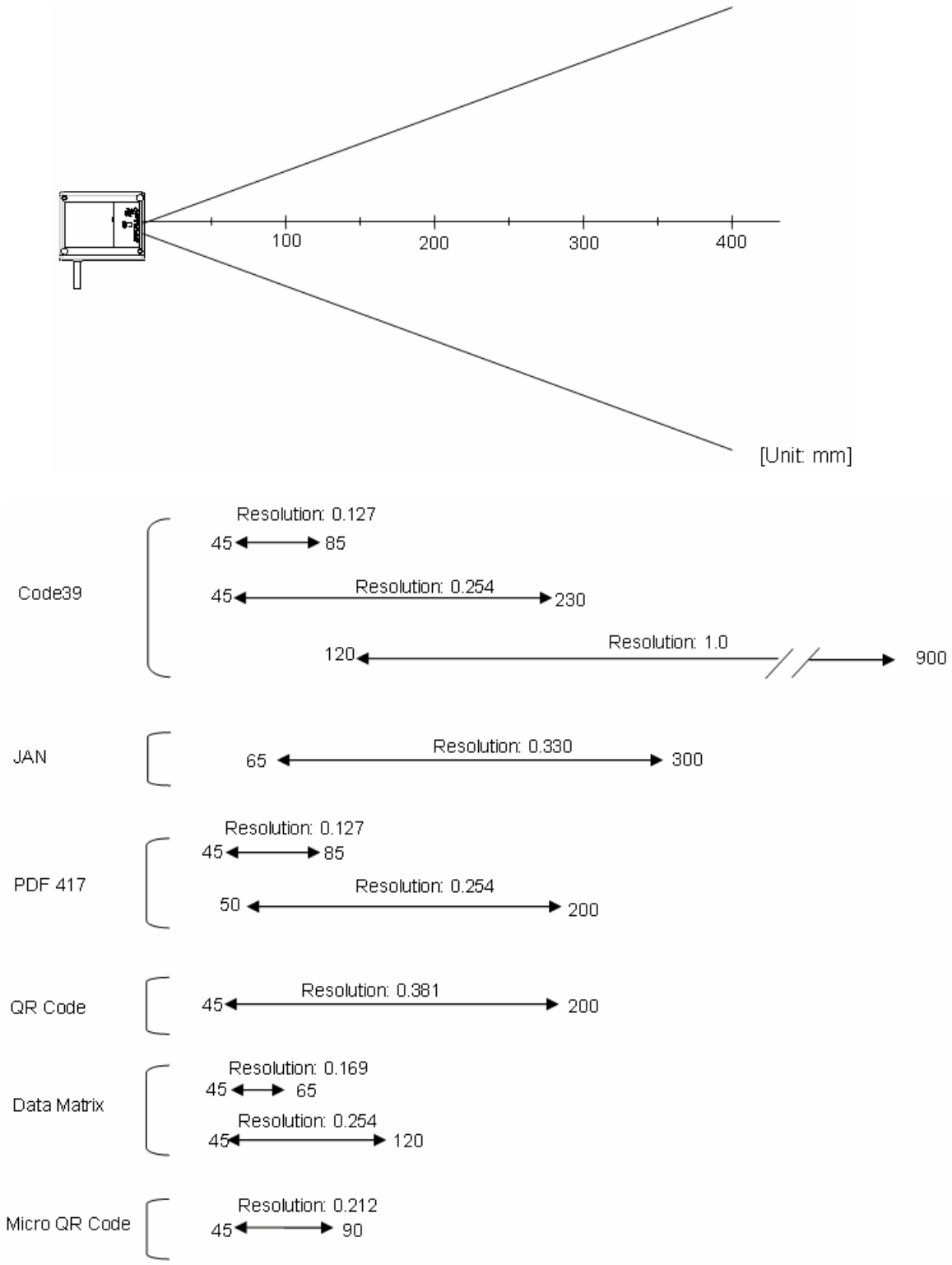

Figure 3: Scan Range and Depth of Field

7.2. Print Contrast Signal (PCS)

PSC 0.45 or higher

<Conditions>

MRD	: 32% or higher (70% or higher reflectivity of space and quiet zone)
Distance	: 120mm from the front edge of the scanner
Bar Code Sample (1D and 2D)	: PDF417 specified in Chapter 7 (Resolution: 0.254mm, PCS: 0.45)

MRD = Minimum reflectance of white bar - Maximum reflectance of black bar

$$\text{PCS} = \frac{\text{Reflectance of white bar} - \text{Reflectance of black bar}}{\text{Reflectance of white bar}}$$

7.3. Minimum Resolution

0.0762mm	Code 39 (specified in Chapter 7)
0.127mm	PDF417 (specified in Chapter 7)
0.127mm	Data Matrix, QR Code

<Conditions>

Distance	: 55 mm from the front edge of the scanner
Angle	: Pitch: α = 0°, Skew: β = 15°, Tilt: γ = 0°.
Curvature	: R = ∞

7.4. Pitch, Skew, and Tilt

Pitch	α = ±40° (when β = 15°, γ = 0°)
Skew	β = ±50° (when α = +0° γ = 0°)
Tilt	γ = 360° (when α = +0°, β = 15°)

<Conditions>

Bar Code Sample	: 0.254mm Code 39, PDF417 (specified in Chapter 7)
Distance	: 116mm from the front edge of the scanner
Curvature	: R = ∞

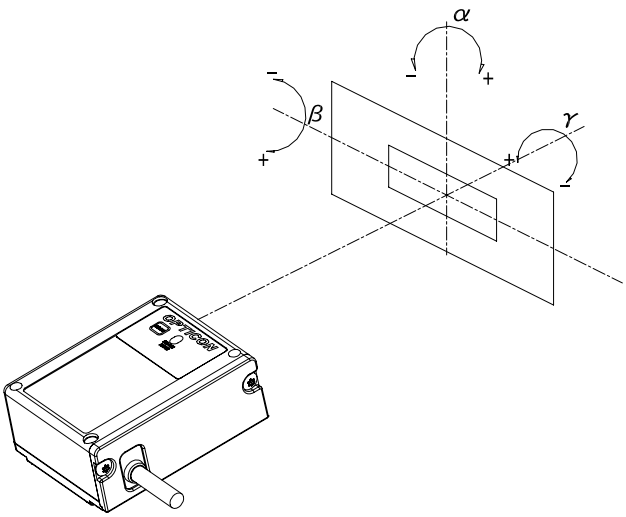

Figure 4: Pitch, Skew, and Tilt

7.5. Curvature

8-digit JAN	r ≧ 15mm
13-digit JAN	r ≧ 20mm

<Conditions>

Bar Code Sample	: JAN code (Resolution = 0.26mm) specified in Chapter 7
Distance	: 116mm from the front edge of the scanner
Angle	: Pitch: α = 0°, Skew: β = 15°, Tilt: γ = 0°.

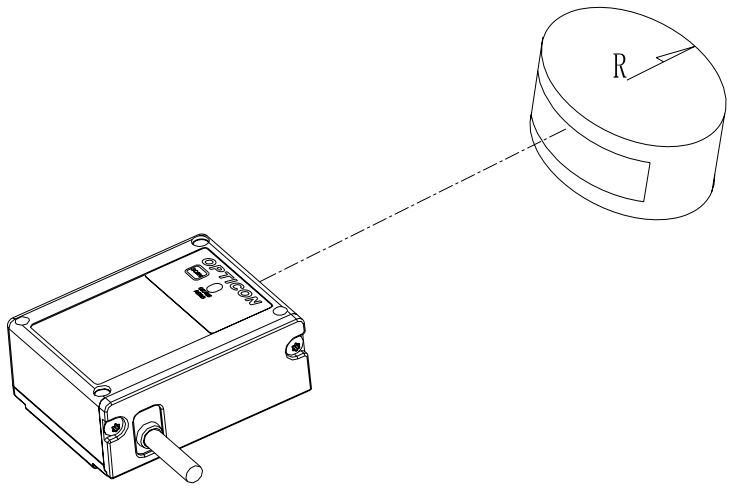

Figure 5: Curvature

Note: Scanning may fail due to the specular reflection of illumination LEDs when the reflectivity is high. In that case, scan the code tilting the scanner in the skew direction or set the illumication LED off so that the performance can improve. Make sure of the sufficient environmental illuminance (1000lx or more) when the illumination LED is off to keep the the scanning performance. The ambient lights also may cause the reflection and the degraded scanning performance.

8. Environmental Specifications

8.1. Temperature

Operating Temperature	-5 ~ 50°C
Storage Temperature	-20 ~ 60°C

8.2. Humidity

Operating Humidity	20 ~ 85% RH (no condensation, no frost)
Storage Humidity	20 ~ 85% RH (no condensation, no frost)

8.3. Ambient Light Immunity

Scanning performance is guaranteed when the range of illumination on a bar code surface is the following values.

Fluorescent light	0 ~ 10,000lx
Incandescent light	0 ~ 10,000 lx
Sunlight	0 ~ 100,000 lx

<Conditions>

Bar Code Sample	: PDF417 (Resolution 0.254 mm) specified in Chapter 7
Distance	: 116mm from the front edge of the scanner
Angles	: Pitch: α = 0°, Skew: β = 15°, Tilt: γ = 0°
Curvature	: R = ∞
Power Supply Voltage	: 5.0V

* Be sure that the direct light or specular reflection from the light source does not enter the light receiving section of the F-30.

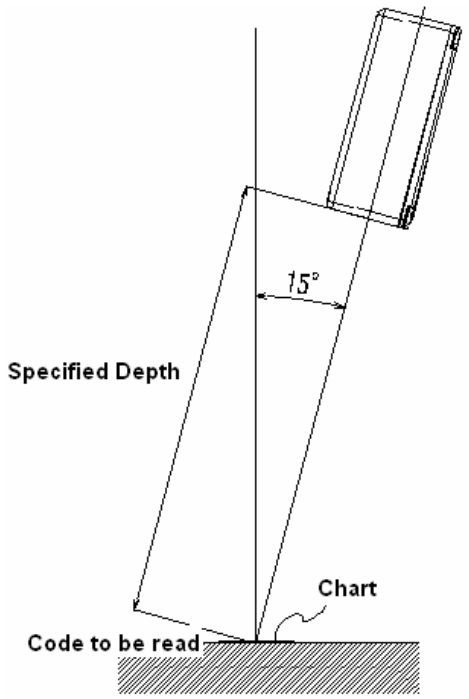

Figure 6: Ambient Light Immunity

8.4. Dust and Drip Proof

IEC IP42

8.5. Electrostatic Discharge Immunity

No destruction	± 15kV (air discharge)
No malfunction	± 6kV (contact discharge)
	± 8kV (air discharge),

* Testing method complies with IEC-61000-4-2. (150pf, 330ohm)

8.6. Drop Impact Strength (without packaging)

There shall be no sign of malfunction of the F-31 after the following drop test.
Drop Test: Drop the scanner 6 times in total, at each face, from a height of 75cm onto a concrete floor as shown below.

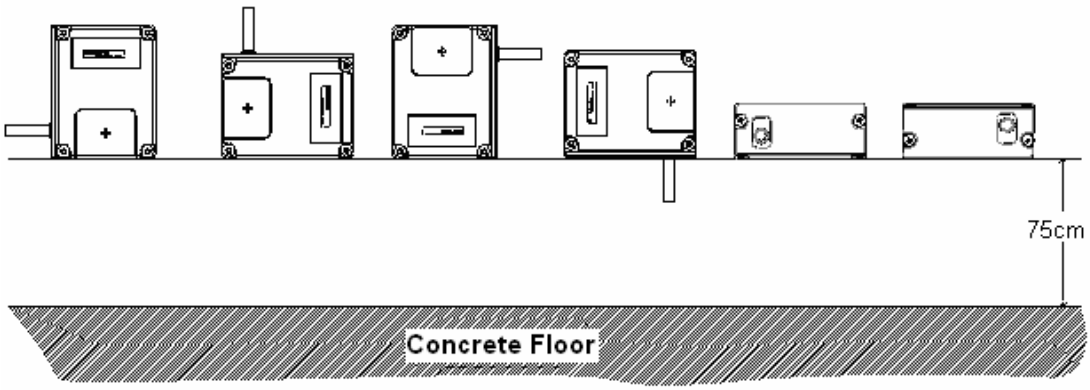

Figure 7: Drop Test

8.7. Drop Impact Strength (in individual packaging)

There shall be no sign of malfunction of the F-31 after the following drop test.
Drop Test: Drop an individually packaged scanner 10 times in total, at any of 1 corner, 3edges, and 6 faces, from a height of 100cm onto a concrete floor.

8.8. Vibration Strength

There shall be no sign of malfunction of the F-31 after the following vibration test.
Vibration Test: Increase the frequency of the vibration from 12Hz to 100Hz at an accelerated velocity of 19.6m/S^2(2G) for 6 minutes. Repeat this 10 times in each X, Y, Z direction for a total of 180 minutes.

8.9. Cable Strength

There shall be no sign of malfunction of the F-31 after the following cable strength test.
Cable strength test: Affix the scanner to an immovable object and pull it with a force of 2.5kg (static loading) for 1 second. Repeat this 20 times continuously.

8.10. Cable Bending Strength

There shall be no sign of malfunction of the F-31 after the following cable bending test.
Cable bending test: Add a load of 4.9 N (500gf) to a cable and bend it at an angle of 60 degrees to both right and left. Repeat this 1,000 times continuously.

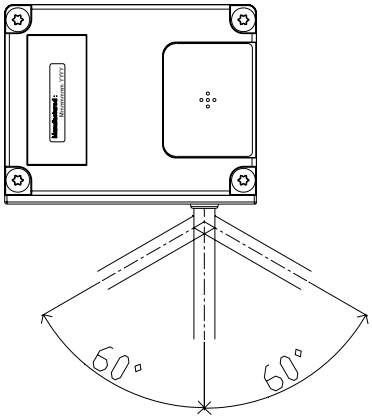

Figure 8: Cable Bending Test

9. Interface Specifications

9.1. RS-232C (9-pin) Interface

A D-Sub 9-pin connector is used for the connection to a host computer.

9.1.1. Setting

Read menu bar codes [ZZ] + [U2] + [ZZ] to set to RS-232C interface default.

Item	"U2" default setting
Baud rate	9600 bps
Start / Stop bits	1 bit
Data length	8 bits
Parity bits	No parity
Handshaking	No hand shaking
CTS time out	Indefinitely

* The communication conditions can be changed by reading menu bar codes.

9.1.2. Signal Level

Signal name	IN/OUT	Voltage(V)	
		Mark / OFF	Space / ON
TxD	OUT	-5 ~ -15	+5 ~ +15
RxD	IN	-3 ~ -15	+3 ~ +15
RTS	OUT	-5 ~ -15	+5 ~ +15
CTS	IN	-3 ~ -15	+3 ~ +15

9.1.3. Pin Assignment

Signal name	Pin No.	Notes
NC	1	Open (not connected)
TxD	2	
RxD	3	
NC	4	Connected to pin 6
GND	5	
NC	6	Connected to pin 4
CTS	7	
RTS	8	
NC	9	Open (not connected)

Connector : D-Sub 9pin Female with DC jack for external power supply
Power supply : Power supply jack
Signal names viewed from the scanner

9.1.4. Interface Circuit

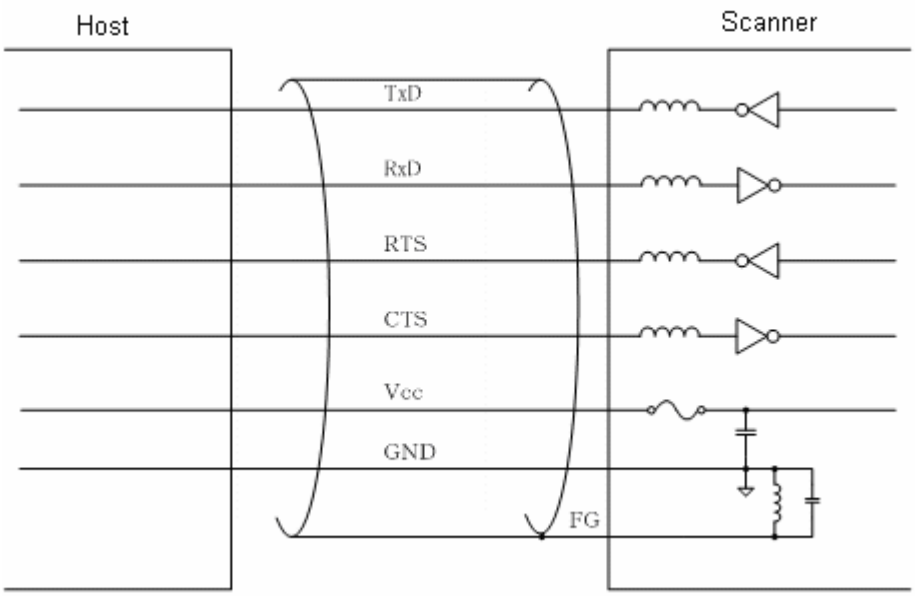

Figure 9: Interface Circuit

9.1.5. Character Format (for send / receive data)

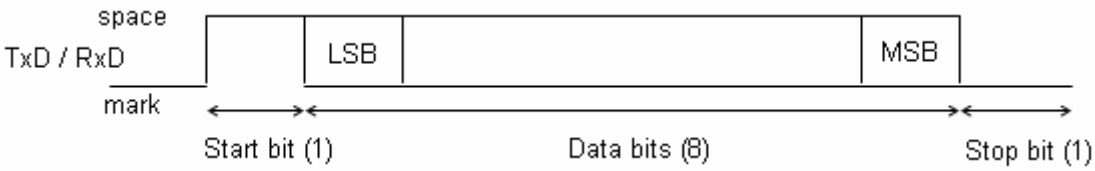

Figure 10: Character Format

9.1.6. Communication Format

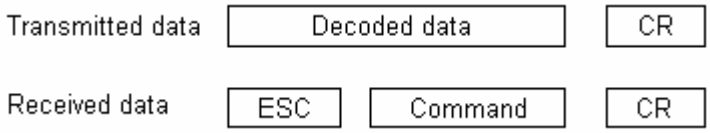

Figure 11: Communication Format

9.1.7. Handshaking

Select handshaking options using the menu or command listed below.

Handshaking	Menu / Command
No handshaking	P0
BUSY/READY	P1
MODEM	P2
ACK/NAK	P3
ACK/NAK NO RESPONSE	P4

a) No handshaking

The scanner makes communication regardless of the state of the host system.
* In this setting, the commands from the host system may not be received correctly.

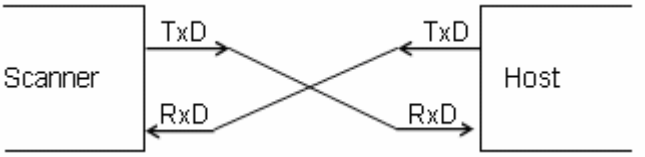

Figure 12: No Handshaking

b) Busy/Ready

The scanner and the host system notify each other if they are able to receive data (BUSY/READY) via their RTS line. When they are connected as shown in the figure below, the CTS line can be used to check if the other side is busy (off) or ready to receive data (on).

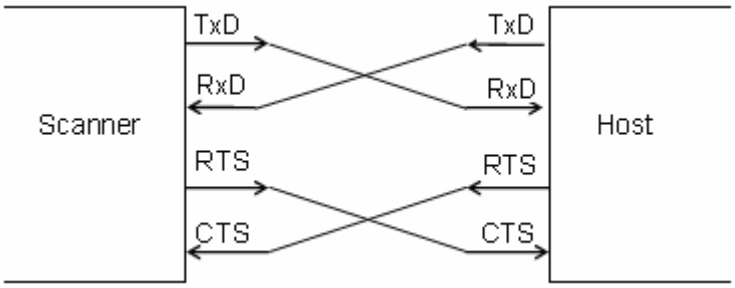

Figure 13: Busy / Ready

The scanner's RTS is normally on (so ready to receive data) except during the processing of received data, while transmitting data, and while it is busy processing menu labels. When the scanner wants to send data, it first has to check if its CTS line is on (to be sure that the host is ready to receive data) When the CTS line is off, the scanner does not send the data but waits for a specific timeout period until the CTS line is tuned on. When the CTS line is not turned on within the time specified, the data transmission will be aborted.

The following options are provided for the CTS line timeout setting. The default is “indefinitely“ (I0).

Flow Control Time Out	Menu / Command
Indefinitely	I0
100 msec	I1
200 msec	I2
400 msec	I3

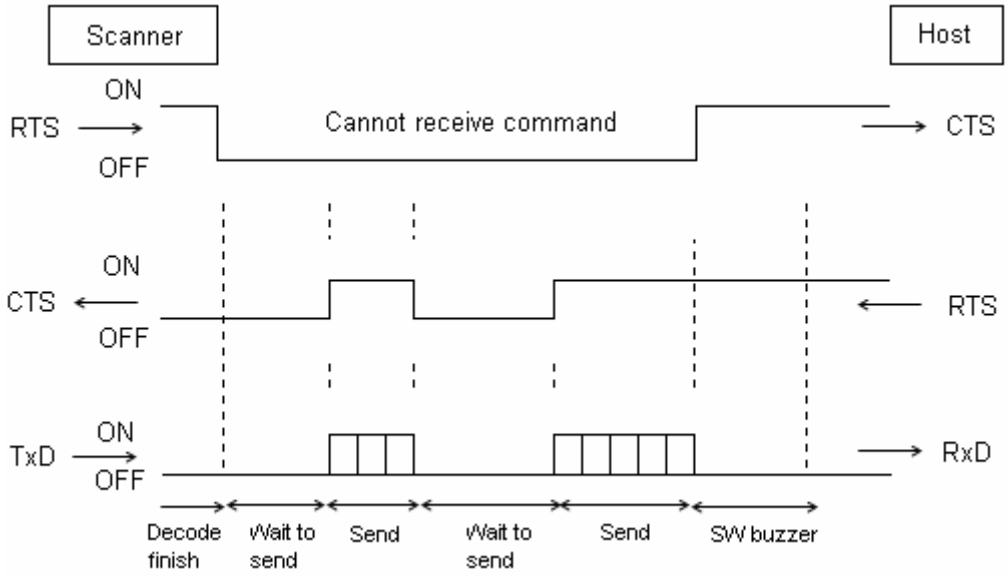

Figure 14: Busy / Ready (Control)

<CTS, TxD signals timing >
When the CTS line (RTS signal on the host side) is turned off during a TXD signal transmission, the scanner transmits one or two characters and waits. When the CTS signal is turned on during a character transmission, the character will be transmitted.

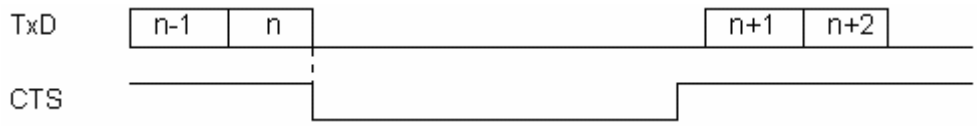

Figure 15: Busy / Ready (CTS, TxD control)

Note: When loopback (wire connection) is used for RTS, CTS line of the scanner in this setting, *No handshake* is not enabled.

c) Modem

The scanner's RTS is OFF as soon as power is supplied to the scanner. The scanner will turn RTS ON when it wants to transmit data to the host. The host should respond by putting CTS ON when it is ready to receive data. While CTS is ON the scanner is allowed to transmit data. When all data has been transmitted, the scanner will turn RTS OFF. In response, the host should turn OFF the scanner's CTS. If, while RTS is ON, the CTS line is not ON for a certain configurable period, the scanner will terminate the transmission with an error indication of the buzzer.

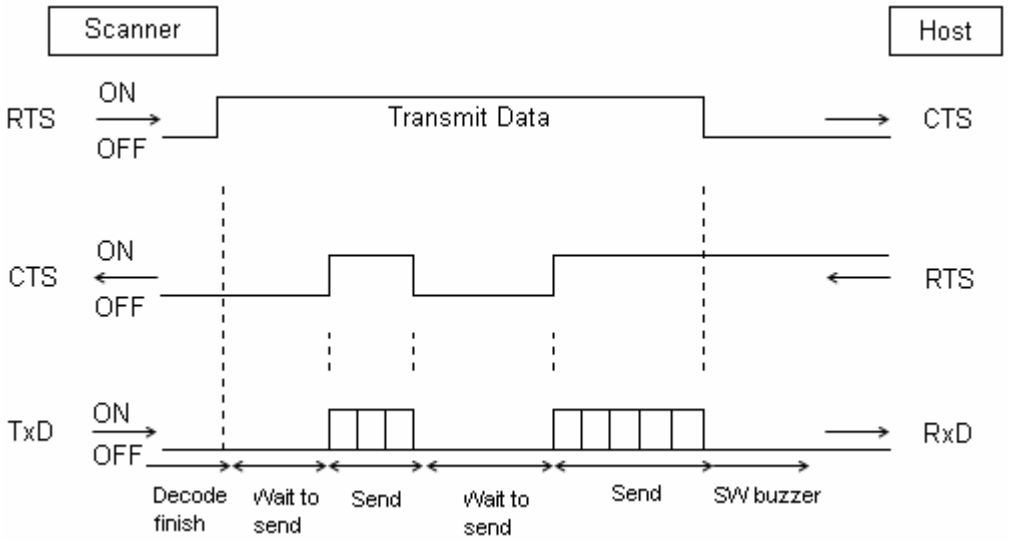

Figure 16: Modem

d) ACK/NAK

After data has been transmitted, the scanner expects to receive one of the following responses from the host:

ACK response	The scanner completes transmission successfully with the good-read buzzer and returns to the initial state.
NAK response	The scanner sends the data again and waits for the response from the host.
DC1 response	The scanner returns to waiting for the trigger when it has a trigger (the initial state).
None response	The scanner sounds the error buzzer and returns to the initial state.

ACK/NAK timeout period can be set by menus / commands as shown below.

XI4 : Indefinitely (default)
XI5 : 100 ms
XI6 : 500 ms
XI7 : 1000 ms

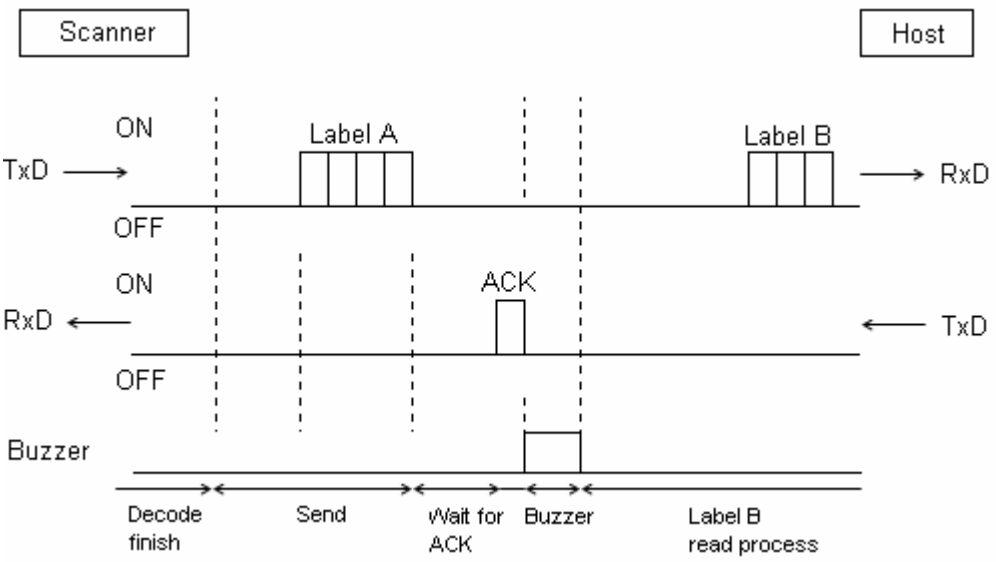

Figure 17: ACK / NAK

e) ACK/NAK No Response
When no response from the host is received within a specified time, the scanner assumes that the host properly received the data. The other actions are the same as ACK/NAK.

*ACK/NAK timeout period is 100ms.

9.2. RS-232C (10-pin) Interface

A cable with loose wires (without a connector) is used for the connection to the host computer. All RS-232C signals except for sequencer signals are in accordance with the chapter 9.1.

9.2.1. Signal Level

The following table provides information only applicable to the sequencer signals.

Signal Name	IN/OUT	Level (V)	
		L-level	H-level
Trigger	IN	-0.3 ~ 0.6V	3 V ~ Vcc + 0.3V
OK	OUT	0.4V / 10mA	OC output / max. 6V
NG	OUT	0.4V / 10mA	OC output / max. 6V

9.2.2. Signal Name and Wire Color

Wire Color	Signal Name	Note
Brown	Trigger	
Yellow	OK	
Orange	NG	
Green	TxD	
Blue	RTS	
White	RxD	
Gray	CTS	
Red	Vcc	+5V
Black	GND	Signal GND
Black Shrinkable Tube	FG	Shield

Signal names viewed from the scanner

9.2.3. Interface Circuit

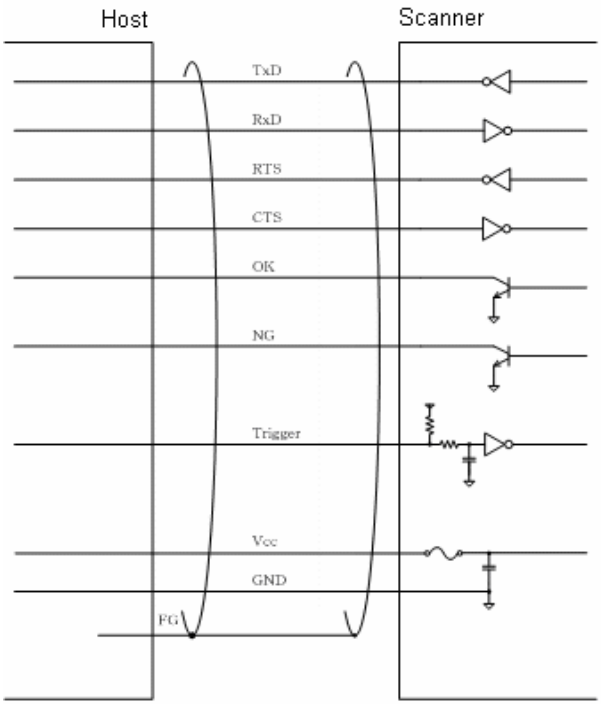

Figure 18: Interface Circuit

9.2.4. Sequencer Signal

OK/NG signal output timing: The following shows the examples of the output timing. The OK/NG signals are output through an NPN transistor open collector.

a) Reading registered bar code in “YB” or “X*C” settings

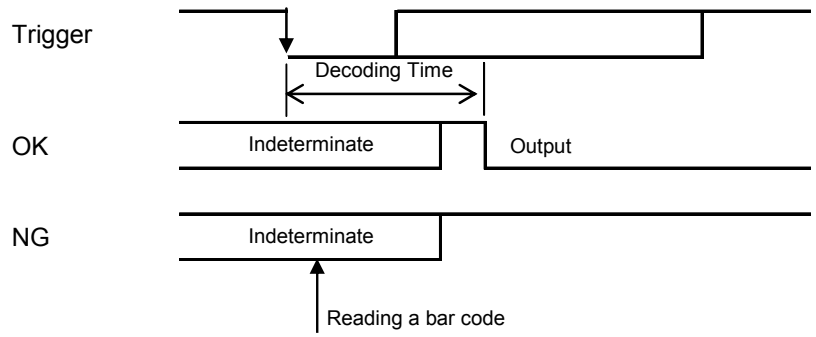

Figure 19: OK/NG Signal Output Timing 1

b) Reading unregistered bar code in “YB” or “X*C” settings

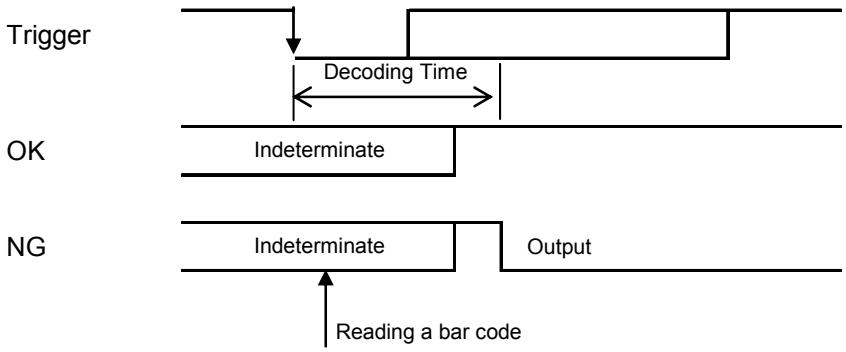

Figure 20: OK/NG Signal Output Timing 2

c) Reading registered bar code in “YB” or “X*E” settings

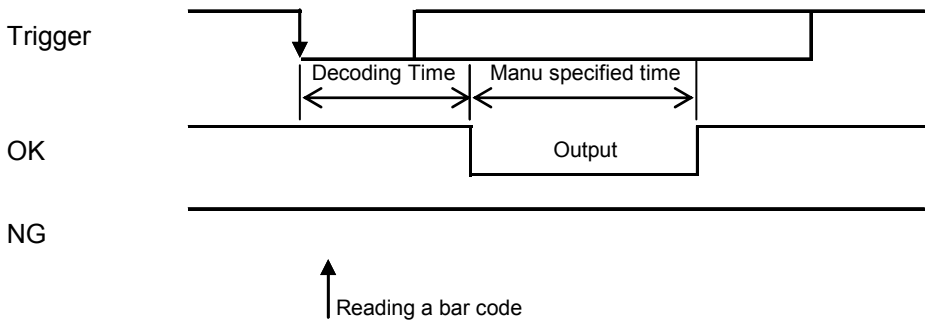

Figure 21: OK/NG Signal Output Timing 3

d) Reading unregistered bar code in “YB” or “X*E” settings

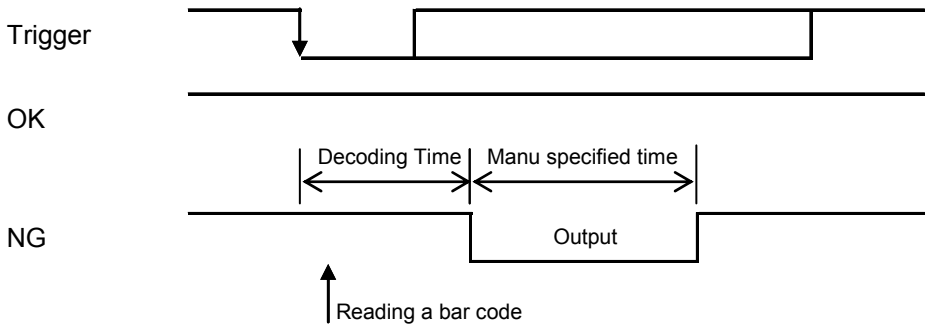

Figure 22: OK/NG Signal Output Timing 4

e) Sequencer output commands and menus

	Function	Menu/Command	Opposite
YA	Trigger input SYNC signal (active H)	○	YB
YB	Trigger input SYNC signal (active L)	○	YA
X*C	SYNC synchronous H active	○	
X*D	SYNC synchronous L active	○	
X*E	One Shot H active	○	
X*F	One Shot L active	○	
X*G	One Shot time 10 ms	○	
X*H	One Shot time 20 ms	○	
X*I	One Shot time 30 ms	○	
X*J	One Shot time 40 ms	○	
X*K	One Shot time 50 ms	○	
X*L	One Shot time 60 ms	○	
X*M	One Shot time 70 ms	○	
X*N	One Shot time 80 ms	○	
X*O	One Shot time 90 ms	○	
X*P	One Shot time 100 ms	○	
X*Q	Enable sequence output	○	X*R
X*R	Disable sequence output	○	X*Q

9.3. USB Interface

The F-30 supports the USB-HID and USB-VCP using full-speed USB interface. For the USB-VCP interface, a dedicated driver needs to be installed on the host.

9.3.1. Setting

USB-HID : Read menu bar codes [ZZ] + [SU] + [ZZ].
USB-VCP : Read menu bar codes [ZZ] + [C01] + [ZZ].

9.3.2. Connector

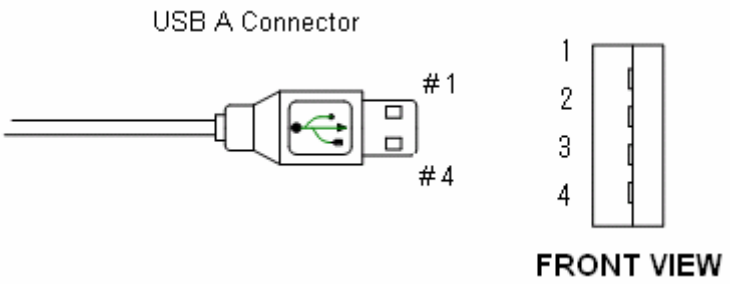

Pin No.	Signal Name
1	Vbus
2	-DATA
3	+DATA
4	GND

Figure 23: USB Pin Assignment

9.3.3. USB Interface Circuit

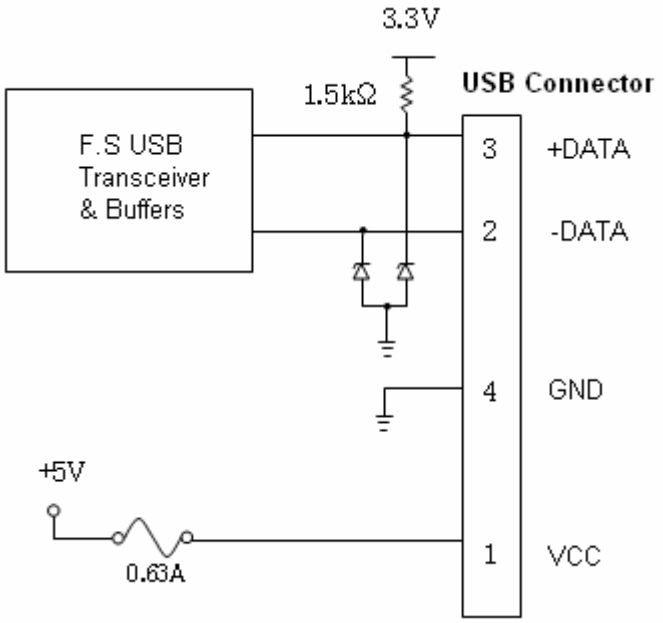

Figure24: USB Interface Circuit

Note: Do not use the host keyboard during the data transmission. The data may fail to be sent correctly.

10. Cable and Connector

10.1. RS-232C (9-pin) Cable

<Standard Specification>

Type	: Straight
Diameter	: φ3.8 ±0.5mm
Length	: 1500 (+100, -0) mm
Number of Pin	: 7 insulated wires, 1 conductive wire
Weight	: Approx. 65 g + Clamp Filter (TDK ZCAT2035-0930A-BK or equivalent) 22 g

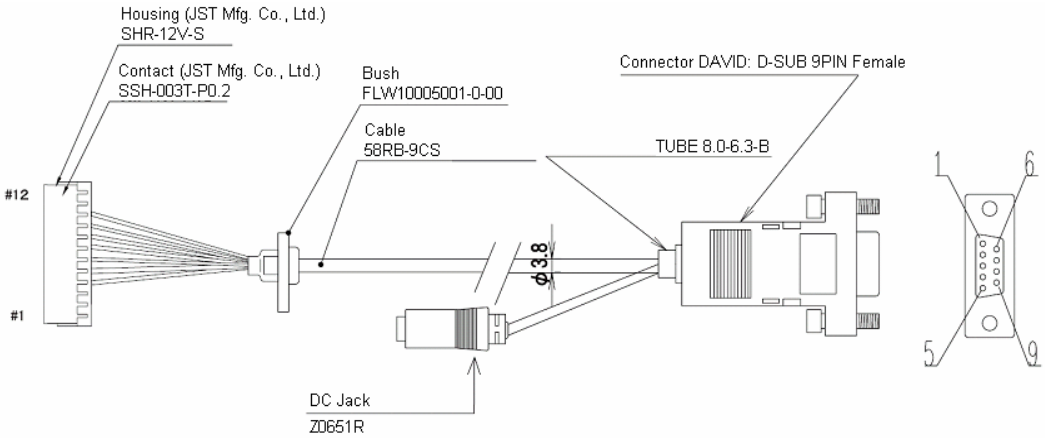

Figure 25: Cable for RS-232C (9-pin)

10.2. RS-232C (10-pin) Cable

<Standard Specification>

Type	: Straight
Diameter	: φ3.8 ±0.5mm
Length	: 1500 (+100, -0) mm
Number of Pin	: 10 insulated wires, 1 conductive wire
Weight	: Approx. 65 g + Clamp Filter (TDK ZCAT2035-0930A-BK or equivalent) 22 g

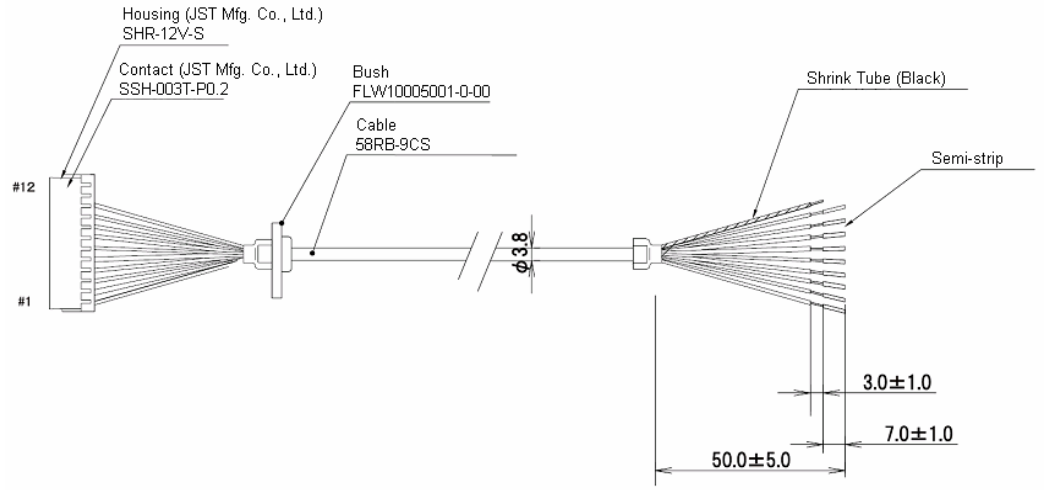

Figure 26: Cable for RS-232C (10-pin)

10.3. USB Cable

<Standard Specification>

Type : Straight

Diameter : φ3.8 ±0.5mm

Length : 1500 (+100, -0) mm

Number of Pin : 4 insulated wires, 1 conductive wire (excluding USB interface cable)

Weight : Approx. 50 g + Clamp Filter (TDK ZCAT2035-0930A-BK or equivalent) 22 g

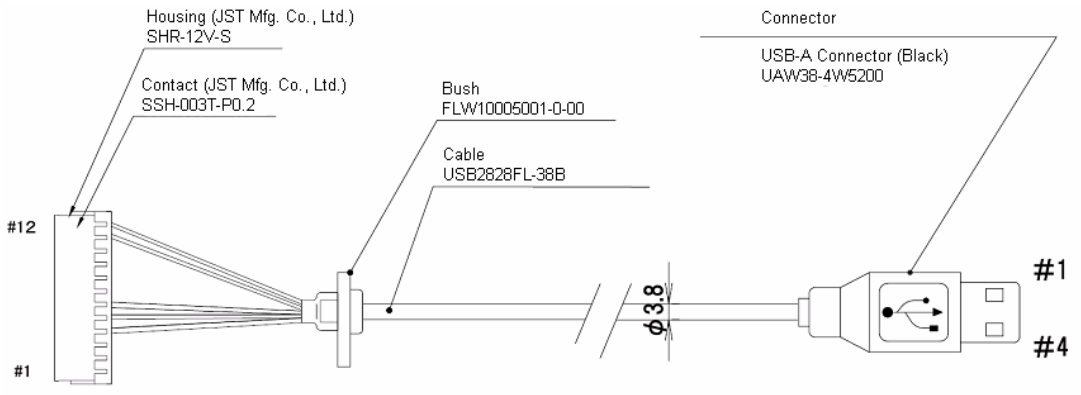

Figure 27: Cable for USB

10.4. Scanner Connector Specifications

CN2 (12-pin)

Pin No.	Specifications		
	RS-232C (9-pin)	RS-232C (10-pin)	USB
1	N.C	Trigger	N.C
2	N.C	OK	N.C
3	N.C	NG	N.C
4	VCC	VCC	VCC
5	FG	FG	FG
6	GND	GND	GND
7	RTS	RTS	N.C
8	CTS	CTS	N.C
9	TxD	TxD	N.C
10	RxD	RxD	N.C
11	N.C	N.C	USB-
12	N.C	N.C	USB+

Connector Used: SHR-12V-S (JST)

11. Default Settings

Menu bar codes are prepared for easy default settings for the scanner.

RS-232C Default

Function	Menu label	Menu code
SET	Z Z	ZZ
RS-232C	U 2	U2
END	Z Z	ZZ

USB-HID Default

Function	Menu label	Menu code
SET	Z Z	ZZ
USB-HID	S U	SU
END	Z Z	ZZ

USB-VCP Default

Function	Menu label	Menu code
SET	Z Z	ZZ
USB-VCP	C 0 1	C01
END	Z Z	ZZ

Default Setting 1: Readable Codes

Code type	Read	Transmit code length	Transmit CD	Calculate CD	Transmit other
UPC-A	○	×	○	○	
UPC-A Add-on	×	×	○	○	
UPC-E	○	×	○	○	
UPC-E1	×	×	○	○	
UPC-E Add-on	×	×	○	○	
EAN-13	○	×	○	○	
EAN-13 Add-on	×	×	○	○	
EAN-8	○	×	○	○	
EAN-8 Add-on	×	×	○	○	
Code 39	○	×	○	×	Not transmit ST/SP
Tri-Optic	○	×	-	-	
NW-7 (Codabar)	○	×	○	×	
Industrial 2of5	○	×	○	×	
Interleaved 2of5	○	×	○	×	
S-Code	○	×	○	×	
Matrix 2of5	×	×	○	×	
Chinese Post matrix 2of5	×	×	○	×	
Korean Postal Authority	×	×	×	○	
Intelligent Mail Barcode	×	×	-	○	
POSTNET	×	×	-	○	
JPN (Customer Barcode)	×	×	-	○	
IATA	○	×	○	×	
MSI/Plessey	○	×	○	○	Not transmit CD2
Telepen	○	×	×	○	
UK/Plessey	○	×	○	○	
Code 128	○	×	-	○	
Code 93	○	×	-	○	
Code 11	×	×	×	○	
Codablock F	×	×	-	○	
Data Matrix (ECC0-140)	×	×	-	○	
Data Matrix (ECC200)	○	×	-	○	
Aztec Code	○	×	-	○	
Aztec Runes	×	×	-	○	
Chinese Sensible Code	×	×	-	○	
QR Code	○	×	-	○	
Micro QR	○	×	-	○	
Maxi Code	○	×	-	○	
PDF417	○	×	-	○	
Micro PDF417	○	×	-	○	

* In case of enabling Codablock F, be sure to disable Code128. Codablock F may accidentally be recognized as Code 128.

Default Setting 2: Readable Codes

Code type		Read	Transmit code length	Transmit CD	Calculate CD	Transmit other
GS1 DataBar	Standard	○	×	○	○	
	Truncated					
	Stacked					
	Stacked Omnidirectional					
GS1 DataBar Limited		○	×	○	○	
GS1 DataBar Expanded	Standard	○	×	×	○	
	Stacked					
Composite EAN	EAN-13 CCA	×	×	○ (1D part)	○	
	EAN-13 CCB					
	EAN-8 CCA					
	EAN-8 CCB					
Composite UPC	UPC-A CCA					
	UPC-A CCB					
	UPC-E CCA					
	UPC-E CCB					
Composite GS1 DataBar	CCA	×	×	○ (1D part)	○	
	CCB					
	Limited CCA					
	Limited CCB					
	Expanded CCA					
	Expanded CCB					
Composite GS1-128	CCA	×	×	-	○	
	CCB					
	CCC					

Note:
(1) The following symbols in the table indicate; ○ : Enable, x : Disable, - : Not supported
(2) GS1 DataBar : formerly called "RSS"
(3) GS1-128 : formerly called "UCC/EAN128"

Default Setting 3: String Options

Item	Default Setting
Prefix	None
Suffix	CR

Default Setting 4: Code / Read / Indicator Options

Item	Default Setting
The number of characters	Fixed length OFF all codes
Read mode	Single read
NW-7 inter character gap check	1 times the number of character
Multiple read (1D bar code only)	Disable
Trigger switch	Enable
Auto trigger	Disable
Read time	2 seconds
Buzzer duration	50ms
Buzzer tone	3kHz
Buzzer loudness	Volume 1 (max.)
Indicator (green LED) duration	200ms

12. Reliability

MTBF (Mean Time Between Failures) 10,000 hours

13. Regulatory Compliance

13.1. LED Safety

IEC 62471:2006 Exempt Risk Group

13.2. Laser Safety

IEC 60825-1:2007 Class 1
CDRH Class 1

13.3. Product Safety

IEC60950-1
EN60950-1

13.4. EMC

EN55022/EN55024
FCC Part 15 Subpart B Class B

This device complies with part 15 of the FCC Rules. Operation is subject to the following two conditions: (1) this device may not cause harmful Interference, and (2) this device must accept any interference received, including interference that may cause undesired operation.

VCCI Class B

This is a Class B product, to be used in a domestic environment, based on the Technical Requirement of the Voluntary Control Council for Interference from Information Technology Equipment (VCCI). If this is used near a radio or television receiver in a domestic environment, it may cause radio interference.

14. RoHS

RoHS: The restriction of the use of certain hazardous substances in electrical and electronic equipment, 2002/95/EC

15. Precautions

15.1. Precaution against Laser Light

*Use of controls or adjustments or performance of procedures other than those specified herein may result in hazardous radiation exposure.

Caution - Do not stare into the laser light from a scanning window. It may harm your eyes.
Do not point the laser directly at others' eyes. It may harm your eyes.
Do not stare into the beam with optical instruments. It may harm your eyes.
.

15.2. Handling

Handle this product carefully. Do not deliberately subject it to any of the following:

(1) Shock:
- Do not drop this product from a height greater than specified in this manual.
- Do not swing the cable around.
- Do not place this product under or between any heavy items.

(2) Temperature Conditions:
- Do not use and/or store this product at temperatures outside the specified range.
- Do not pour boiling water on this product.
- Do not throw this product into a fire.
- Do not bend the cable at extremely low temperature.

(3) Foreign Materials:
- Do not immerse this product in water or other liquid.
- Do not expose this product to chemicals.

(4) Others
- Do not insert and remove a cable while the power is being supplied.
- Do not disassemble this product.
- Do not use this product near a radio or a TV. It may cause reception problems.
- This product may be affected by a momentary voltage drop caused by lightning.
- This product may not perform properly in environments when placed near a flickering light, such as a CRT (computer monitor, television, etc.).

* This specification manual is subject to change without prior notice.

16. Product Label

The following product label with serial number listed is attached to the scanner.

Figure 28: Product Label

17. Packaging Specifications

17.1. Individual Packaging Specifications

Put the scanner in a protection poly bag and place it in a box.
Assembled package size: 245(W) x 110(D) x 38(H) mm

17.2. Collective Packaging Specifications

Assembled package size: 560(W) x 490(D) x 195(H) mm

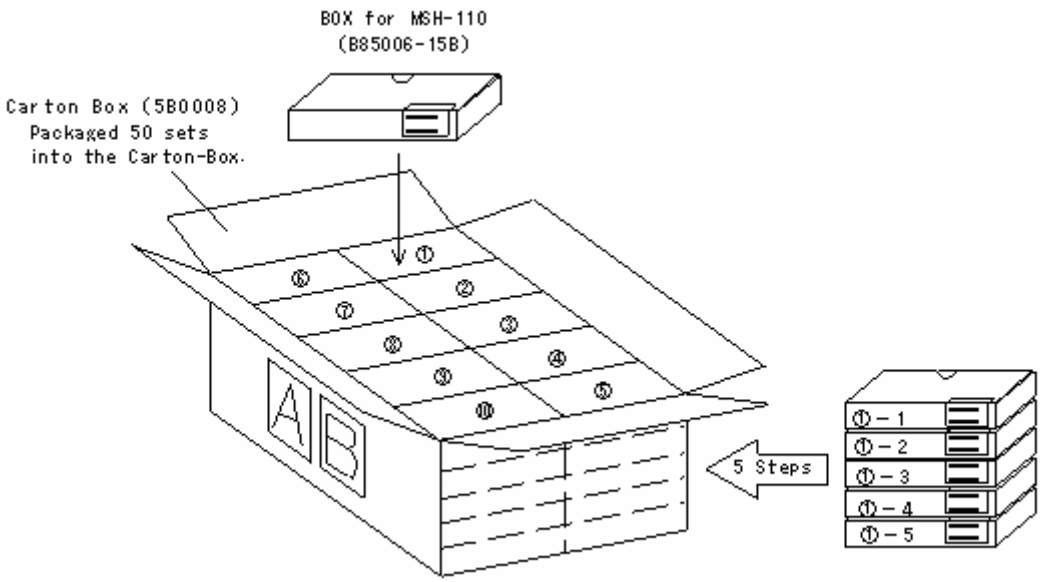

Figure 29: Collective Packaging

Note: 'Ro mark' on the trays and the boxes for the product indicates that the product is RoHS compliant, which is declared by Optoelectronics Co., Ltd.

18. Auto Trigger

The F-30 can be set to auto trigger mode. This means that the scanner starts scanning automatically when it detects a change in brightness that occurs when a bar code label is presented in front of it.

18.1. Outline of Operation

In auto trigger mode, the scanner captures a barcode image using the ambient light and detects the brightness of multiple bright / dark parts in the detection area of the image (a shaded area in the figure below). The scanner constantly monitors the areas to see if the brightness is changed. When the brightness variations at regular time intervals in either area is larger than the threshold value, the scanning operation (multiple read) starts. After the elapse of the specified read time, the scanning stops.

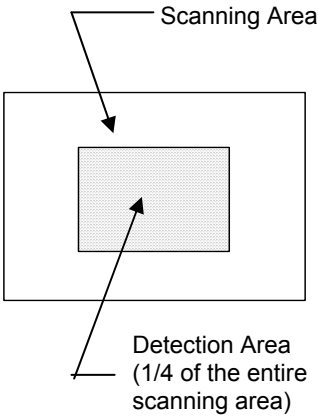

Figure 30: Detection Area

18.2. Settings

Enable / Disable setting of auto trigger (disabled by default):

To enable auto trigger, read “ZZ”, “+I” and “ZZ”.
To disable auto trigger, read “ZZ”, “+F” and “ZZ”.

<2D menu code sample>

Enable Auto Trigger

Disable Auto Trigger

Appendix: Mechanical Drawing

Dimensions: 58.0 x 46.0 x 24.5 (DWH mm, except protruding portion)

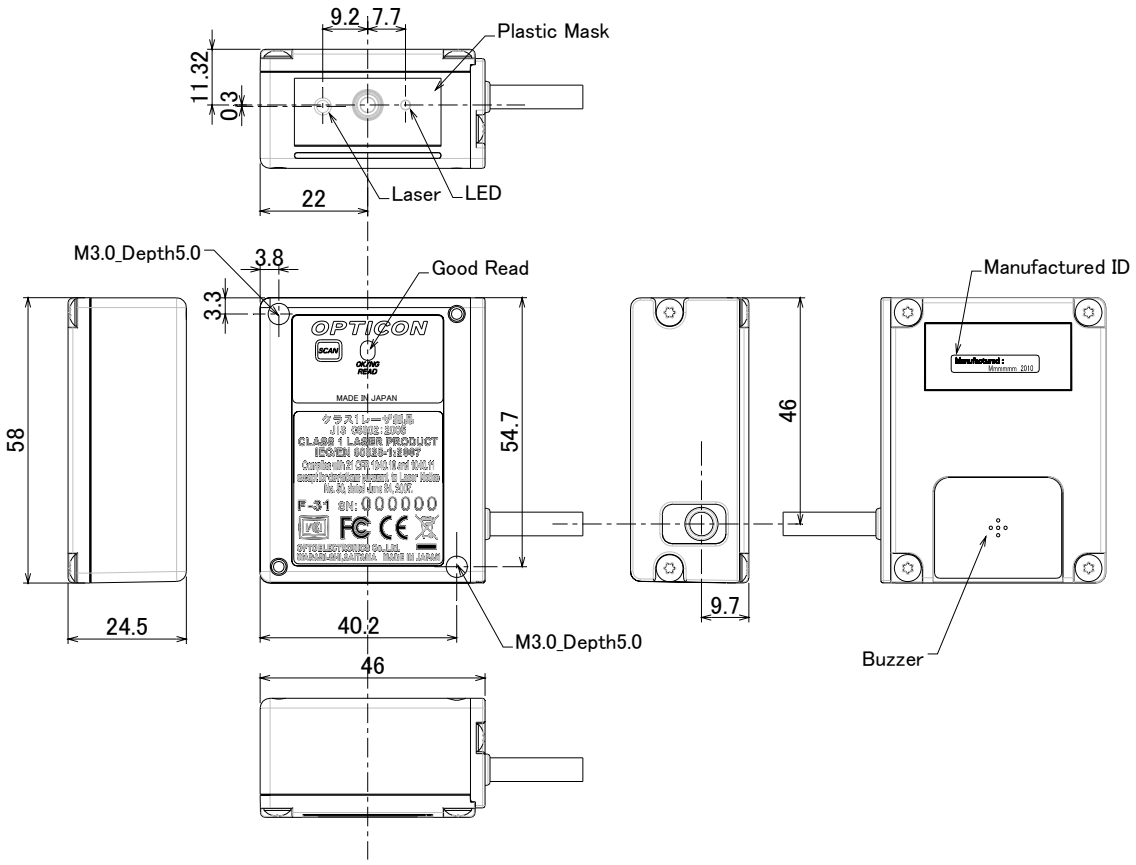

Figure 31: Mechanical Drawing