

Cisco ASR 1000 Series Router Hardware Installation Guide

First Published: 2013-08-02

Americas Headquarters
Cisco Systems, Inc.
170 West Tasman Drive
San Jose, CA 95134-1706
USA
http://www.cisco.com
Tel: 408 526-4000
800 553-NETS (6387)
Fax: 408 527-0883

© 2013–2017 Cisco Systems, Inc. All rights reserved.



CONTENTS

PREFACE

Preface xxi

Document Revision History xxi

Document Objectives xxii

Audience xxiii

Document Organization xxiii

Conventions xxiv

Safety Warnings and Cautions xxv

Warning Definition xxvi

Related Documentation xxx

Obtaining Documentation and Submitting a Service Request xxxi

CHAPTER 1

Cisco ASR 1000 Series Routers Hardware Overview 1

Cisco ASR 1000 Series Routers 2

Cisco ASR 1000 Series Router Features 3

Cisco ASR 1000 Series Routers Compatibility Information 4

Hardware Compatibility 5

Cisco ASR 1000 Series Router Configurations 6

Field-Replaceable Units 7

Functional Overview 8

Chassis Slot and Logical Interface Numbering 8

MAC Address Information 8

Online Insertion and Removal 9

Environmental Monitoring and Reporting Functions 10

Environmental Monitoring 10

Fan Failures 11

Reporting Functions 11

Cisco Product Identification Standard 16
Unique Device Identifier 16
Serial Number Label Location 17

CHAPTER 2 **Cisco ASR 1000 Series Routers Component Overview 23**
Cisco ASR 1000 Series Routers Component Software Support 23
Upgrading to New Software 23
Supported ASR 1000 Hardware Components 25
Supported Cisco ASR 1000 Platforms 25
Cisco ASR 1000 Series Hardware Configuration Combinations 26
Hardware Requiring a CPLD Upgrade 27
Incompatible Hardware Configuration Combinations 27
Incompatible ASR1000-ESP Error Message 27
Incompatible ASR1000-RP Error Message 28
Unsupported Hardware Configurations 28
Unsupported ASR1000-ESP Error Message 29
Unsupported ASR1000-SIP Error Message 30
Incompatible Cisco High Availability Hardware Configurations 30
Upgrading Existing Hardware Components to Support the Cisco ASR 1013 Router 31
Unsupported Active ASR1000-RP2 Requires Upgrade 31
When To Perform a CPLD Upgrade 32
Unsupported Standby ASR1000-RP2 or ASR1000-SIP10 Requires Upgrade 32
Image to Upgrade Field-Programmable Hardware Devices 33
Cisco ASR 1000 Series Route Processor 33
Cisco ASR 1000 Series Route Processor Differences 34
Cisco Integrated ASR1000-RP1 for Cisco ASR 1002 Router 39
How Cisco ASR1000-RP Alarm Monitoring Works 42
Cisco ASR 1000 Series Router Power Supplies 43
Power Supply Requirements for All Cisco ASR 1000 Series Routers 43
DC Power System Input Requirements for Cisco ASR 1000 Series Routers 43
AC and DC Power Supply Types 44
AC and DC System Power Ratings 45
Power Supplies for the Cisco ASR 1006 Router 45
AC Power Supply LEDs and Connector for Cisco ASR 1006 46

–48 VDC Power Supply LEDs and Connectors for Cisco ASR 1006 48
AC/DC Power System Output for Cisco ASR 1006 50
Power Supplies for the Cisco ASR 1004 Router 51
Cisco ASR 1004 AC Power Supply 51
Cisco ASR 1004 AC Power Supply LEDs and Connector 51
Cisco ASR Router 1004 –48 VDC Power Supply 54
Cisco ASR 1004 Router –48 VDC Power Supply LEDs and Connector 54
DC Power System Input for Cisco ASR 1004 55
AC/DC Power System Output for Cisco ASR 1004 55
Power Supplies for the Cisco ASR 1002 Router 56
Cisco ASR 1002 Router AC Power Supply 56
Cisco ASR 1002 AC Power Supply LEDs and Connector 57
Cisco ASR 1002 Router –48 VDC Power Supply 58
Cisco ASR 1002 Router –48 VDC Power Supply LEDs and Connector 58
–48 VDC Power System Input for Cisco ASR 1002 Router 59
–48 VDC Power System Output for Cisco ASR 1002 Router 60
Cisco ASR 1002 Router +24 VDC Power Supply 60
Cisco ASR 1002 Router +24 VDC Power Supply LEDs and Connector 60
+24 VDC Power System Input for Cisco ASR 1002 Router 62
+24 VDC Power System Output for Cisco ASR 1002 Router 62
Power Supplies for the Cisco ASR 1013 Router 63
AC Power Supply LEDs and Connector for Cisco ASR 1013 64
–48 VDC Power Supply LEDs and Connectors for Cisco ASR 1013 67
AC/DC Power System Output for Cisco ASR 1013 69
Power Supplies for the Cisco ASR 1001 Router 69
Cisco ASR 1001 Router AC Power Supply 70
Cisco ASR 1001 Router DC Power Supply 71
AC/DC Power System Input Range and Voltage for Cisco ASR 1001 71

CHAPTER 3 **Cisco ASR 1000 Series Routers Embedded Services Processors** 73
Cisco ASR 1000-ESP5 74
Cisco ASR 1000-ESP10 75
Cisco ASR 1000-ESP20 75
Cisco ASR 1000-ESP40 75

Cisco ASR 1000-ESP100 76
Cisco ASR 1000-ESP200 76
Cisco ASR 1000-ESP200 and Second Generation Cisco QFP 77
Implications of SIP and SPA Slot Mapping 77
Cisco ASR1000-ESP100-X 77
Cisco ASR1000-ESP200-X 78
Features of the Cisco ASR 1000 Series Embedded Services Processors 79

CHAPTER 4 **Cisco ASR 1000 Series Router SPA Interface Processors (SIPs) 83**
Cisco ASR 1000 Series SPA Interface Processor 83
SPA Interface Processor Slot Numbering 86
Cisco ASR 1006 Router and Cisco ASR 1004 Router 86
Cisco ASR 1002 Router 86
Cisco ASR 1002-F Router 87
Cisco ASR 1013 Router 88
Cisco ASR 1001 Router 90
Cisco ASR 1002-X Router 90

CHAPTER 5 **Preparing Your Site for Installation 93**
Prerequisites and Preparation 93
Safety Guidelines 94
Safety Warnings 94
Safety Recommendations 94
Compliance Requirements 95
Cautions and Regulatory Compliance Statements for NEBS 96
Standard Warning Statements 96
General Safety Warnings 97
Site Planning 100
General Precautions 100
Site Selection Guidelines 100
Site Environmental Requirements 100
Physical Characteristics 101
Floor Loading Considerations 103
Site Power Guidelines 103

Electrical Circuit Requirements 104
Site Cabling Guidelines 105
Asynchronous Terminal Connections 106
Interference Considerations 106
Rack-Mounting Guidelines 108
Precautions for Rack-Mounting 108
General Rack Selection Guidelines 108
Guidelines for 23 in. (Telco) Racks 109
Equipment Rack Guidelines 109
Site Planning Checklist 110
Preventing Electrostatic Discharge Damage 110
Electrical Safety 111
Receiving the Cisco ASR 1000 Series Router 112
Chassis-Lifting Guidelines 113
Tools and Equipment 113
Unpacking and Verifying Shipping Contents 114
Checking the Shipping Container Contents 114
Cisco ASR 1000 Series Router Installation Checklist 115

CHAPTER 6 **Cisco ASR 1006 Router Overview and Installation 117**
Cisco ASR 1006 Router Description 117
Front View 118
Rear View 118
Cisco ASR 1006 Router Slot Numbering 120
Installation Methods 120
General Rack Installation Guidelines 121
Guidelines for an Equipment Shelf or Tabletop Installation 122
Equipment Shelf or Tabletop Installation 122
Rack-Mounting the Cisco ASR 1006 Router 125
Verifying Rack Dimensions 125
Attaching the Chassis Rack-Mount Brackets 126
Chassis Front Rack-Mount Brackets 126
Chassis Rear Rack-Mount Brackets 127
Installing the Cisco ASR 1006 Router in a Rack 129

Two-Post Rack Installation 130
Four-Post Rack Installation 132
Attaching the Cable-Management Brackets 134
Attaching a Chassis Ground Connection 136
Recommended Tools and Supplies 137
Connecting the Shared Port Adapter Cables 139
Connecting the Console and Auxiliary Port Cables 139
Connecting the Ethernet Management Port Cable 140
Connecting Power to the Cisco ASR 1006 Router 140
Power Cords Supported by the Cisco ASR 1006 Router 141
Connecting AC Input Power to Cisco ASR 1006 Router 142
Connecting DC Input Power to Cisco ASR 1006 Router 143
Connecting a Terminal to the Cisco ASR 1000 Series RP Console Port 150
Connecting the System Cables 152
Attaching Cable Retention Bracket on AC Power Supply 152

CHAPTER 7 **Cisco ASR 1004 Router Overview and Installation 155**
Cisco ASR 1004 Router Description 156
Front View 156
Rear View 157
Cisco ASR 1004 Router Slot Numbering 158
Installation Methods 159
General Rack Installation Guidelines 159
Guidelines for an Equipment Shelf or Tabletop Installation 161
Equipment Shelf or Tabletop Installation 161
Rack-Mounting the Cisco ASR 1004 Router 163
Verifying Rack Dimensions 164
Attaching the Chassis Rack-Mount Brackets 165
Chassis Front Rack-Mount Brackets 165
Chassis Rear Rack-Mount Brackets 166
Installing the Cisco ASR 1004 Router in a Rack 168
Two-Post Rack Installation 169
Four-Post Rack Installation 171
Attaching a Chassis Ground Connection 172

Recommended Tools and Supplies 173
Attaching the Cable-Management Bracket 175
Connecting the Shared Port Adapter Cables 176
Connecting the Console and Auxiliary Port Cables 177
Connecting the Ethernet Management Port Cable 178
Connecting Power to Cisco ASR 1004 Router 178
Power Cords Supported by the Cisco ASR 1004 Router 180
Connecting AC Input Power to Cisco ASR 1004 Router 180
Connecting --48 VDC Input Power to Cisco ASR 1004 Router 181
Connecting a Terminal to the Cisco ASR Series 1000 Route Processor Console Port 184
Connecting the Network Management and Signal System Cables 186

CHAPTER 8 **Cisco ASR 1002 Router Overview and Installation 187**
Cisco ASR 1002 Router Description 187
Front View 188
Rear View 189
Cisco ASR 1002 Router Slot Numbering 190
Cisco ASR 1002 Router Components 190
Cisco Embedded ASR1000-RP1 for Cisco ASR 1002 Router Description 191
Cisco Embedded ASR1000-SIP10 and SPAs for Cisco ASR 1002 Router Description 191
Cisco ASR1000-ESP5 and ASR1000-ESP10 Description 192
Power Supplies in the Cisco ASR 1002 Router 192
AC Power Supply for Cisco ASR 1002 Router 193
48 VDC Power Supply for Cisco ASR 1002 Router 194
24 VDC Power Supply for Cisco ASR 1002 Router 195
24 VDC Power System Input for Cisco ASR 1002 Router 197
+24 VDC Power System Output for Cisco ASR 1002 Router 197
Power Cords Supported by the Cisco ASR 1002 Router 198
Installation Methods 198
General Rack Installation Guidelines 199
Guidelines for an Equipment Shelf or Tabletop Installation 200
Equipment Shelf or Tabletop Installation 201
Rack-Mounting the Cisco ASR 1002 Router 203
Verifying Rack Dimensions 203

Attaching the Chassis Rack-Mount Brackets 204
Chassis Front Rack-Mount Brackets 204
Chassis Rear Rack-Mount Brackets 205
Installing the Cisco ASR 1002 Router in a Rack 207
Two-Post Rack Installation 208
Four-Post Rack Installation 209
Attaching the Cable-Management Bracket 211
Attaching a Chassis Ground Connection 213
Connecting the Shared Port Adapter Cables 215
Connecting the Console and Auxiliary Port Cables 216
Management Ethernet Port Cable Connection 217
Cisco ASR 1002 Router Power Supplies 218
Connecting AC Input Power to Cisco ASR 1002 Router 219
Connecting 48 VDC Input Power to Cisco ASR 1002 Router 221
Connecting Cisco 24 VDC Power Supply 224
Connecting a Terminal to the Cisco ASR1000-RP1 Console Port 231
Connecting Cables 232

CHAPTER 9 **Cisco ASR 1002-F Router Overview and Installation 233**
Cisco ASR 1002-F Router Description 233
Front View 234
Rear View 234
Cisco ASR 1002-F Router Slot Numbering 236
Cisco ASR 1002-F Router Components 236
Cisco Integrated RP and Cisco ASR 1002-ESP-F Description 237
Cisco Integrated ASR 1002-SIP10-F and SPA for Cisco ASR 1002-F Router Description 239
Power Supplies in the Cisco ASR 1002-F Router 239
AC Power Supply for the Cisco ASR 1002-F Router 240
DC Power Supply for the Cisco ASR 1002-F Router 240
Power Cords Supported by the Cisco ASR 1002-F Router 242
Installation Methods 242
General Rack Installation Guidelines 243
Guidelines for an Equipment Shelf or Tabletop Installation 244
Equipment Shelf or Tabletop Installation 245

Rack-Mounting the Cisco ASR 1002-F Router 247
Verifying Rack Dimensions 247
Attaching the Chassis Rack-Mount Brackets 248
Chassis Front Rack-Mount Brackets 248
Chassis Rear Rack-Mount Brackets 249
Installing the Cisco ASR 1002-F Router in a Rack 251
Two-Post Rack Installation 252
Four-Post Rack Installation 253
Attaching the Cable-Management Bracket 255
Attaching a Chassis Ground Connection 256
Connecting the Shared Port Adapter Cables 259
Connecting the Console and Auxiliary Port Cables 259
Connecting a Cable to the Management Ethernet Port 260
Connecting Power to the Cisco ASR 1002-F Router 261
Connecting AC Input Power to the Cisco ASR 1002-F Router 262
Connecting DC Input Power to the Cisco ASR 1002-F Router 265
Connecting a Terminal to the Cisco Integrated RP Console Port and Auxiliary Port 268
Connecting Cables 269

CHAPTER 10 **Cisco ASR 1002-X Router Overview and Installation 271**
Cisco ASR 1002-X Router Description 271
Front View of the Cisco ASR 1002-X Router 273
Rear View of the Cisco ASR 1002-X Router 273
Cisco ASR 1002-X Router Slot Numbering 274
Power Supplies in the Cisco ASR 1002-X Router 276
AC Power Supply for the Cisco ASR 1002-X Router 276
--48 VDC Power Supply for the Cisco ASR 1002-X Router 277
+24 VDC Power Supply for the Cisco ASR 1002-X Router 278
+24 VDC Power System Input for the Cisco ASR 1002-X Router 280
+24 VDC Power System Output for the Cisco ASR 1002-X Router 280
Power Cords Supported by the Cisco ASR 1002-X Router 281
Installation Methods 282
General Rack Installation Guidelines 282
Guidelines for an Equipment Shelf or Tabletop Installation 284

Equipment Shelf or Tabletop Installation Procedure 284
Rack-Mounting the Cisco ASR 1002-X Router 286
Verifying Rack Dimensions 287
Attaching the Chassis Rack Mount Brackets 287
Chassis Front Rack Mount Brackets 288
Chassis Rear Rack Mount Brackets 289
Installing the Cisco ASR 1002-X Router in a Rack 290
Two-Post Rack Installation 291
Four-Post Rack Installation 293
Attaching the Cable Management Bracket 294
Attaching a Chassis Ground Connection 296
Connecting the SPA Cables 299
Connecting the Console and Auxiliary Port Cables 299
Management Ethernet Port Cable Connection 300
Cisco ASR 1002-X Router Power Supplies 300
Connecting AC Input Power to Cisco ASR 1002-X Router 301
Connecting the –48 VDC Input Power to the Cisco ASR 1002-X Router 303
Connecting the +24 VDC Power Supply to the Router 306
Connecting a Terminal to the Console Port 310
Connecting External Cables to the Cisco ASR 1002-X Router 311

CHAPTER 11 **Cisco ASR 1013 Router Overview and Installation 313**
Cisco ASR 1013 Router Description 313
Front View 314
Rear View 316
Cisco ASR 1013 Router Power Zones 318
Cisco ASR 1013 Router Slot Numbering 319
Installation Methods 319
General Rack Installation Guidelines 320
Guidelines for Equipment Rack Installation 321
Attaching the Rear Rack-Mount Brackets 322
Rack-Mounting the Cisco ASR 1013 Router 324
Verifying Rack Dimensions 324
Installing the Cisco ASR 1013 Router in a Rack 325

Installing the Chassis Using the Forward Rack-Mount Brackets 325
Installing the Chassis Using the Forward Rack-Mount Brackets 328
Two-Post Rack Installation 329
Four-Post Rack Installation 330
Attaching the Cable-Management Bracket 333
Attaching a Chassis Ground Connection 335
Recommended Tools and Supplies 335
Connecting the Shared Port Adapter Cables 337
Connecting the Console and Auxiliary Port Cables 337
Connecting the Ethernet Management Port 339
Connecting Power to the Cisco ASR 1013 Router 339
Cisco ASR 1013 Router Power Supply Overview 339
Power Cords Supported by the Cisco ASR 1013 Router 340
Connecting AC Input Power to Cisco ASR 1013 Router 341
Connecting DC Input Power to Cisco ASR 1013 Router 342
Connecting a Terminal to the Cisco ASR 1000 Series RP Console Port 348
Connecting the System Cables 349
Attaching Cable Retention Bracket on AC Power Supply 350

CHAPTER 12 **Cisco ASR 1001 Router Overview and Installation 351**
Cisco ASR 1001 Router Description 351
Cisco ASR 1001 Router Architecture 352
Cisco ASR 1001 Router Faceplate Common Components 358
Cisco ASR 1001 Chassis Front View 359
Cisco ASR 1001 Chassis Rear View 360
Cisco ASR 1001 Router Slot Numbering 360
Cisco ASR 1001 Router Components 361
Cisco Embedded ASR1000-RP1 for Cisco ASR 1001 Router Description 361
Cisco Embedded ASR1000-SIP10 and SPAs for the Cisco ASR 1001 Router Description 362
Cisco ASR 1001 Router Integrated Daughter Card Description 363
Cisco ASR1000-ESP for the Cisco ASR 1001 Router Description 363
Power Supplies in the Cisco ASR 1001 Router 364
AC Power Supply for Cisco ASR 1001 Router 364
--48 VDC Power Supply for Cisco ASR 1001 Router 365

Power Cords Supported by the Cisco ASR 1001 Router 366
Installation Methods 366
General Rack Installation Guidelines 367
Guidelines for an Equipment Shelf or Tabletop Installation 368
Mounting the Cisco ASR 1001 Router on an Equipment Shelf or Tabletop Installation 368
Rack-Mounting the Cisco ASR 1001 Router 370
Verifying Rack Dimensions 370
Attaching the Chassis Rack-Mount Brackets 371
Chassis Front Rack-Mount Brackets 372
Installing the Cisco ASR 1001 Router in a Rack 373
Two-Post Rack Installation 374
Four-Post Rack Installation 375
Attaching the Cable-Management Bracket 377
Attaching a Chassis Ground Connection 378
Recommended Tools and Supplies 379
Connecting the Shared Port Adapter Cables 381
Connecting the Console and Auxiliary Port Cables 381
Management Ethernet Port Cable Connection 382
Connecting a Terminal to the Cisco ASR1000-RP1 Console Port 383
Connecting Cables 384
Overview of AC and DC Power Supplies for the Cisco ASR 1001 Router 384
Cisco ASR 1001 Router Power Supply Installation 385
Installing AC Input Power to Cisco ASR 1001 Router 386
Removing AC Power Supply from the Cisco ASR 1001 Router 389
Installing DC Input Power on the Cisco ASR 1001 Router 390
Wiring the DC Input Power Source 392
Removing DC Input Power from the Cisco ASR 1001 Router 396

CHAPTER 13 **Cisco ASR 1000 Series Routers Power Up and Initial Configuration** 399
Checking Conditions Prior to System Startup 399
Verifying Power Supply Operation 400
Powering Up the Cisco ASR 1000 Series Routers 401
Verifying the Front Panel LEDs 405
Verifying the Hardware Configuration 405

Checking Hardware and Software Compatibility 405
Configuring the Cisco ASR 1000 Series Routers at Startup 405
Using the Console Interface 406
Configuring Global Parameters 407
Checking the Running Configuration Settings 408
Saving the Running Configuration to NVRAM 408
Powering Off the Cisco ASR 1000 Series Router Safely 408

CHAPTER 14 **Removing and Replacing FRUs from the Cisco ASR 1000 Series Routers 411**
Removing and Replacing Cisco ASR 1000 Series Route Processors 411
Removing the Cisco ASR 1000 Series Route Processor from the Cisco ASR 1006, Cisco ASR 1004, and Cisco ASR 1013 Routers 412
Replacing the Cisco ASR 1000 Series Route Processor in the Cisco ASR 1006, Cisco ASR 1004, and Cisco ASR 1013 Routers 413
Removing and Replacing Cisco ASR 1000 Series Route Processor Internal Hard Drive 414
Cisco ASR1000-RP1 Spare Hard Drive Accessory Kit 414
Removing and Replacing the Cisco ASR1000-RP1 Module Internal Hard Drive 414
Removing the Cisco ASR1000-RP1 Internal Hard Drive 415
Replacing the Cisco ASR1000-RP1 Internal Hard Drive 418
Removing and Replacing the Cisco ASR1000-RP2 Module Internal Hard Drive 419
Removing the Cisco ASR1000-RP2 Internal Hard Drive 420
Replacing the Cisco ASR1000-RP2 Internal Hard Drive 422
Removing and Replacing the Hard Drive on the Cisco ASR 1002-X Router 423
Removing the Hard Drive from the Cisco ASR 1002-X Router 423
Replacing the Hard Drive on the Cisco ASR 1002-X Router 425
Removing and Replacing the Hard Drive on the Cisco ASR 1001 Router 426
Removing the Hard Drive from the Cisco ASR 1001 Router 426
Replacing the Hard Drive on the Cisco ASR 1001 Router 428
Removing and Replacing the Cisco ASR 1000 Series DIMM Memory Modules 429
Removing and Replacing the DIMM Memory Modules on the Cisco ASR 1006 Router and the Cisco ASR 1013 Router 429
Removing and Replacing the Cisco ASR1000-RP1 DIMM Memory Modules 431
Removing and Replacing the Cisco ASR1000-RP2 DIMM Memory Modules 435
Removing the Cisco ASR1000-RP2 DIMMs 436

Replacing the Cisco ASR1000-RP2 DIMMs 438
Removing and Replacing the Cisco ASR 1001 Router DIMM Memory Modules 440
Removing the Cisco ASR 1001 Router DIMMs 441
Replacing the Cisco ASR 1001 Router DIMM 443
Removing and Replacing the Cisco ASR 1002-X Router DIMM Memory Modules 445
Removing the Cisco ASR1002-X Router DIMMs 446
Replacing the Cisco ASR1002-X Router DIMMs 448
Removing and Replacing Cisco ASR 1000 Router eUSB Devices 450
Remove and Replace the eUSB Device on the Cisco ASR 1006 and Cisco ASR 1004 Routers 450
Remove and Replace the eUSB Device on the Cisco ASR 1006 and Cisco ASR 1004 Routers 452
Remove and Replace the eUSB Device on the Cisco ASR 1001 Router 454
Remove and Replace the eUSB Device on the Cisco ASR 1001 Router 455
Removing and Replacing Cisco ASR 1000 Series Router 1 GB USB Flash Token Memory Stick 457
Minimum Requirements of eUSB Devices Supported on Cisco ASR 1000 Series Routers 459
Removing and Replacing Cisco ASR 1000 Series Embedded Service Processors 460
Important Notes about Cisco ASR1000-ESP Upgrades 461
Removing a Cisco ASR1000-ESP 461
Replacing the Cisco ASR1000 ESP 462
Removing and Replacing Cisco ASR 1000 Series Router SPAs and SPA Interface Processors 463
Electrostatic Discharge Prevention 464
Removing the Cisco ASR 1000 SPA Interface Processor 465
Replacing the Cisco ASR 1000 SPA Interface Processor 465
Removing a Shared Port Adapter from a SIP 466
Replacing a Shared Port Adapter in a SIP 467
Removing and Replacing the Cisco ASR 1006 Router Power Supplies 467
Removing and Replacing a AC Power Supply in Cisco ASR 1006 Router 467
Removing the AC Power Supply from Cisco ASR 1006 Router 467
Replacing the AC Power Supply in Cisco ASR 1006 Router 469
Removing and Replacing a DC Power Supply in Cisco ASR 1006 Router 471
Removing the DC Power Supply from Cisco ASR 1006 Router 473
Replacing the DC Power Supply in Cisco ASR 1006 Router 477
Removing and Replacing the Cisco ASR 1004 Router Power Supplies 481
Removing and Replacing an AC Power Supply in Cisco ASR 1004 Router 481
Removing the AC Power Supply from Cisco ASR 1004 Router 481

Replacing the AC Power Supply in Cisco ASR 1004 Router 483
Removing and Replacing a DC Power Supply in Cisco ASR 1004 Router 483
Removing the DC Power Supply from the Cisco ASR 1004 Router 485
Replacing the DC Power Supply in Cisco ASR 1004 Router 488
Removing and Replacing the Cisco ASR 1002 Router Power Supplies 490
Removing and Replacing an AC Power Supply in Cisco ASR 1002 Router 490
Removing the AC Power Supply from Cisco ASR 1002 Router 491
Replacing the AC Power Supply in Cisco ASR 1002 Router 491
Replacing the AC Power Supply in Cisco ASR 1002 Router 492
Removing and Replacing a –48 VDC Power Supply in Cisco ASR 1002 Router 494
Removing the –48 VDC Power Supply from Cisco ASR 1002 Router 495
Replacing the –48 VDC Power Supply in Cisco ASR 1002 Router 497
Removing and Replacing a +24 VDC Power Supply in Cisco ASR 1002 Router 499
Removing the +24 VDC Power Supply from Cisco ASR 1002 Router 500
Replacing the +24 VDC Power Supply in Cisco ASR 1002 Router 501
Removing and Replacing the Cisco ASR 1013 Router Power Supplies 508
Removing and Replacing an AC Power Supply in Cisco ASR 1013 Router 508
Removing the AC Power Supply from Cisco ASR 1013 Router 508
Replacing the AC Power Supply in Cisco ASR 1013 Router 510
Removing and Replacing a DC Power Supply in Cisco ASR 1013 Router 510
Removing the DC Power Supply from Cisco ASR 1013 Router 512
Replacing the DC Power Supply in Cisco ASR 1013 Router 514
Removing and Replacing the Cisco ASR 1001 Router Power Supplies 517
Installing the AC Power Supply into Cisco ASR 1001 Router 519
Removing AC Power Supply from the Cisco ASR 1001 Router 521
Installing DC Power Supply into Cisco ASR 1001 Router 522
Removing DC Input Power from the Cisco ASR 1001 Router 524
Wiring the DC Input Power Source 524
Repacking the Router 529

CHAPTER 15 **Cisco ASR 1000 Series Router Specifications 531**
Cisco ASR 1001-HX and Cisco ASR 1002-HX Router Specifications 531
Cisco ASR 1006X and Cisco ASR 1009X Router Specifications 531
Cisco ASR 1006 Router Specifications 531

Cisco ASR 1006 Router Memory and Storage Options 532
Cisco ASR 1006 Router Ethernet RJ-45 Port Pinouts 532
Cisco ASR 1006 Router MGMT Ethernet Port Pinouts 533
Cisco ASR 1006 Router BITS Port Signals and Pinouts 533
Cisco ASR 1006 Router Console Port Signals and Pinouts 534
Cisco ASR 1006 Router Auxiliary Port Signals and Pinouts 534
Cisco ASR 1006 Router DB-25 Pinout Assignments for Alarm Relays 535
Cisco ASR 1004 Router Specifications 536
Cisco ASR 1004 Router Memory and Storage Options 536
Cisco ASR 1004 Router Ethernet RJ-45 Port Pinouts 537
Cisco ASR 1004 Router MGMT Ethernet Port Signals and Pinouts 537
Cisco ASR 1004 Router Console Port Signals and Pinouts 537
Cisco ASR 1004 Router Auxiliary Port Signals and Pinouts 538
Cisco ASR 1004 Router BITS Port Signals and Pinouts 538
Cisco ASR 1004 Router DB-25 Pinout Assignments for Alarm Relays 539
Cisco ASR 1002 Router, Cisco ASR 1002-F Router, and Cisco ASR 1002-X Router Specifications 539
Cisco ASR 1002 Router Mgmt Ethernet RJ-45 Port Pinouts 540
Cisco ASR 1002 Router Console Port Signals and Pinouts 541
Cisco ASR 1002 Router Auxiliary Port Signals and Pinouts 541
Cisco ASR 1002 Router BITS Port Signals and Pinouts 542
Cisco ASR 1002-X Router BITS Port Signals and Pinouts 542
Cisco ASR 1002-X Router BNC GPS Ports 543
Cisco ASR 1002-X Router Time of Day Port Pinout 543
Cisco ASR 1013 Router Specifications 544
Cisco ASR 1013 Router Memory and Storage Options 545
Cisco ASR 1013 Router Ethernet RJ-45 Port Pinouts 545
Cisco ASR 1013 Router MGMT Ethernet Port Signals and Pinouts 545
Cisco ASR 1013 Router Console Port Signals and Pinouts 545
Cisco ASR 1013 Router Auxiliary Port Signals and Pinouts 546
Cisco ASR 1013 Router BITS Port Signals and Pinouts 546
Cisco ASR 1013 Router DB-25 Pinout Assignments for Alarm Relays 547
Cisco ASR 1001 Router Specifications 547
Cisco ASR 1001 Router Memory and Storage Options 548

CHAPTER 16 **Cisco ASR 1000 Series Router Route Processor and Embedded Services Processor Signals and Pinouts** 549

Cisco ASR 1000-RP1 Pinout Specifications 549

MGMT Ethernet Port Signals and Pinouts 549

BITS Interface Port Signals and Pinouts 550

Console Port Signals and Pinouts 550

Auxiliary Port Signals and Pinouts 550

Cisco ASR1000-RP2 Pinout Specifications 551

MGMT Ethernet Port Pinouts 551

BITS/DTI Interface Port Signals and Pinouts 552

Console Port Signals and Pinouts 552

Auxiliary Port Signals and Pinouts 552

Cisco ASR1000-ESP40 Console Port Pinout Specifications 553

Cisco ASR1000-ESP100 Console Port Pinout Specifications 553

Cisco ASR1000-ESP200 Console Port Pinout Specifications 554

CHAPTER 17 **Troubleshooting Initial Startup Problems** 555

Troubleshooting Overview 555

Online Troubleshooting Resources 556

General Troubleshooting Tips 556

Troubleshooting Using a Subsystem Approach 557

Normal Router Startup Sequence 557

Troubleshooting the Power Subsystem 557

Troubleshooting the Cooling Subsystem 559

Troubleshooting the Shared Port Adapter 560

Troubleshooting the Upgrade 560

Replacing or Recovering a Lost Password 564

Overview of the Password Recovery Procedure 564

Details of the Password Recovery Procedure 566

Recovering the Password When a Standby RP is Included in the System 569

CHAPTER 18 **MIBs Overview** 571

MIBs for the Cisco ASR 1001 Router 571



Preface

This preface describes the objectives and organization of this document and explains how to find additional information on related products and services. This preface contains the following sections:

- Document Revision History, on page xxi
- Document Objectives, on page xxii
- Audience, on page xxiii
- Document Organization , on page xxiii
- Conventions, on page xxiv
- Safety Warnings and Cautions, on page xxv
- Related Documentation, on page xxx
- Obtaining Documentation and Submitting a Service Request, on page xxxi

Document Revision History

The Document Revision History table below records technical changes to this document.

Date	Change Summary
July 2013	Added information about Cisco ASR1000-ESP200.
July 2012	Added information about Cisco ASR 1002-X Router, Cisco ASR1000-ESP100, and support for Cisco ASR1000-SIP40 on all routers that support Cisco ASR1000-SIP10. Information about these new features has been added in various sections in this guide.
March 2011	Added information about: • IDC-HD80G, IDC-4XGE, and IDC-CHT1/E1 integrated daughter cards on the Cisco ASR 1001 Router—See the Cisco ASR 1001 Router Description, on page 351 for detailed information. • MIBs for the new IDCs—See the MIBs for the Cisco ASR 1001 Router, on page 571 appendix for the list of MIBs. • Cisco ASR 1013 Router power supplies on the Cisco ASR 1006 Router—Information about this new feature has been added in various sections in this guide.

Date	Change Summary
November 2010	Added information about: • New Cisco ASR 1001 Router at Cisco ASR 1001 Router Description, on page 351 • Cisco ASR1000-SIP40 and Cisco ASR1000-ESP40 products on the Cisco ASR 1004 Router
July 2010	Added information about Cisco ASR 1000 Series Routers 40G products: • Cisco ASR 1013 Router Overview and Installation • Cisco ASR 1000-ESP40, on page 75 • Supported ASR 1000 Hardware Components, on page 25
November 2009	Added information about the Cisco +24 VDC power supply in the Cisco ASR 1002 Router. See the following sections: • Cisco ASR 1002 Router +24 VDC Power Supply, on page 60 • Removing and Replacing the Cisco ASR 1002 Router Power Supplies, on page 490 •
June 2009	Added information about the Cisco ASR 1002-F Router. **Note** Unless otherwise noted, the Cisco ASR 1002-F Router supports all the general-purpose routing and security features of the Cisco ASR 1002 Router and uses the same internal control and data-plane architecture as Cisco ASR 1002 Router and the Cisco ASR 1002-F Router is supported only by Cisco software release four code.
February 2009	Added information about Cisco ASR1000-RP2 and how alarms work with the power supply DB-25 connector. In addition, added safety information and updated the chapter on field-replaceable units (FRUs).
November 2008	Added information about the improved window of time allotted to replace a power supply. You now have up to 5 minutes to replace the power supply.
October 2008	Added information about Cisco ASR1000-ESP20 and Cisco ASR1000-ESP10-N support. Updated eUSB device graphics and replacement information.
May 2008	Released the first version of this document for the Cisco ASR 1000 Series Routers.

Document Objectives

This publication describes the installation of the Cisco ASR 1000 Series Aggregation Services Routers, replacement or upgrading of field-replaceable units (FRUs), and troubleshooting of the Cisco ASR 1000 Series Routers hardware. The purpose of this guide is to enable the safe and efficient installation of the Cisco ASR 1000 Series Aggregation Services Routers.

Note For information on installation of the Cisco ASR 1001-X Router, and replacement or upgrading of its field-replaceable units (FRUs), see the *Cisco ASR 1001-X Router Hardware Installation Guide* at the following URL: http://www.cisco.com/c/en/us/td/docs/routers/asr1000/install/guide/1001-x/asr1hig.html.

Audience

This publication is primarily designed for the person responsible for installing, maintaining, and troubleshooting the Cisco ASR 1000 Series Aggregation Services Routers. The users of this guide should:

- Be familiar with electronic circuitry and wiring practices.
- Have experience as electronic or electromechanical technicians.
- Have experience in installing high-end networking equipment. Certain procedures described in this guide require a certified electrician.

Document Organization

The following table describes the chapters and appendixes in this installation guide:

Chapter and Appendix	Description
Preface	The preface provides objectives, audience and organization of this manual.
Chapter 1, “Cisco ASR 1000 Series Routers Hardware Overview”	This chapter provides an overview of the Cisco ASR 1000 Series Aggregation Services Routers.
Chapter 2, “Cisco ASR 1000 Series Routers Component Overview”	This chapter provides an overview of the hardware components for the Cisco ASR 1000 Series Aggregation Services Routers.
Chapter 3, “Cisco ASR 1000 Series Routers Embedded Services Processors”	This chapter describes the Cisco ESPs for the ASR 1000 platform routers.
Chapter 4, “Cisco ASR 1000 Series Router SPA Interface Processors (SIPs)”	This chapter describes the Cisco SIPs for the ASR 1000 platform routers.
Chapter 5, “Preparing Your Site for Installation”	This chapter provides site preparation guidelines for installing the ASR 1000 Series Routers.
Chapter 6, “Cisco ASR 1006 Router Overview and Installation”	This chapter describes the Cisco ASR 1006 router and how to install it.
Chapter 7, “Cisco ASR 1004 Router Overview and Installation”	This chapter describes the Cisco ASR 1004 router and how to install it.

Chapter and Appendix	Description
Chapter 8, “Cisco ASR 1002 Router Overview and Installation"	This chapter describes the Cisco ASR 1002 router and how to install it.
Chapter 9, “Cisco ASR 1002-F Router Overview and Installation"	This chapter describes the Cisco ASR 1002-F router and how to install it.
Chapter 10, “Cisco ASR 1002-X Router Overview and Installation"	This chapter describes the Cisco ASR 1002-X router and how to install it.
Chapter 11, “Cisco ASR 1013 Router Overview and Installation"	This chapter describes the Cisco ASR 1013 router and how to install it.
Chapter 12, “Cisco ASR 1001 Router Overview and Installation"	This chapter describes the Cisco ASR 1001 router and how to install it.
Chapter 13, “Cisco ASR 1000 Series Routers Power Up and Initial Configuration"	This chapter provides basic system startup and initial configuration information.
Chapter 14, “Removing and Replacing FRUs from the Cisco ASR 1000 Series Routers"	This chapter provides instructions for removing and replacing shared port adapters, ASR 1000 RP1 internal hard drive, AC and DC power supplies, the Cisco ASR 1000 ESP forwarding processors, the Cisco DIMM memory cards, the Cisco memory stick, and the Cisco ASR 1000 Series Route Processors.
Appendix A, “Cisco ASR 1000 Series Router Specifications"	This appendix provides system specifications and pinouts.
Appendix B, “Cisco ASR 1000 Series Router Route Processor and Embedded Services Processor Signals and Pinouts"	This appendix lists pinout specifications for the Cisco ASR1000-RP1 and the Cisco ASR1000-RP2.
Appendix C, "Troubleshooting Initial Startup Problems"	This appendix provides basic system startup troubleshooting information.
Appendix D, "MIBs for the Cisco ASR 1001 Router"	This appendix lists the MIBs that can be used to manage the Cisco ASR 1001 Router.
Glossary	The glossary lists Cisco ASR 1000 Series Routers terms with definitions.

Conventions

This document uses the following conventions:

Convention	Indication
bold font	Commands and keywords and user-entered text appear in **bold** font.
italic font	Document titles, new or emphasized terms, and arguments for which you supply values are in *italic* font.
[ ]	Elements in square brackets are optional.
{x | y | z }	Required alternative keywords are grouped in braces and separated by vertical bars.
[x | y | z]	Optional alternative keywords are grouped in brackets and separated by vertical bars.
string	A nonquoted set of characters. Do not use quotation marks around the string or the string will include the quotation marks.
courier font	Terminal sessions and information the system displays appear in courier font.
< >	Nonprinting characters such as passwords are in angle brackets.
[ ]	Default responses to system prompts are in square brackets.
!, #	An exclamation point (!) or a pound sign (#) at the beginning of a line of code indicates a comment line.

Note Means *reader take note* .

Tip Means *the following information will help you solve a problem* .

Caution Means *reader be careful* . In this situation, you might perform an action that could result in equipment damage or loss of data.

Timesaver Means *the described action saves time* . You can save time by performing the action described in the paragraph.

Safety Warnings and Cautions

Most safety warnings for the Cisco ASR 1000 Series Routers are placed in relevant sections throughout the document. For translated safety warnings, see the Regulatory Compliance and Safety Information for the Cisco 1000 Series Aggregation Services Routers. Statement 1071, the Warning Definition statement, complete with translated warnings is provided in this section.

Warning Definition

Warning	IMPORTANT SAFETY This warning symbol m on any equipment, be a practices for preventing its translation in the tra SAVE THESE INSTRU
Waarschuwing	BELANGRIJKE VEIL Dit waarschuwingssym Voordat u aan enige app betrokken risico's en di Gebruik het nummer va die bij het apparaat wor BEWAAR DEZE INST
Varoitus	TÄRKEITÄ TURVALI Tämä varoitusmerkki m laitteistoa, huomioi säh ehkäisytapoihin. Turva turvallisuusvaroitusten SÄILYTÄ NÄMÄ OH
Attention	IMPORTANTES INFO Ce symbole d'avertisse blessures ou des domm liés aux circuits électri accidents. Pour prendre sécurité traduites qui ac chaque avertissement. CONSERVEZ CES IN
Warnung	WICHTIGE SICHERH Dieses Warnsymbol be Machen Sie sich vor de Verfahren zur Vorbeugu Anweisungsnummer na mit diesem Gerät ausge BEWAHREN SIE DIE

Avvertenza	IMPORTANTI IST Questo simbolo di a Prima di intervenire elettrici e conoscere presente alla fine di documento. CONSERVARE QU
Advarsel	VIKTIGE SIKKER Dette advarselssym å arbeide med noe a til standardprosedyr oversettelsen i de o TA VARE PÅ DISS
Aviso	INSTRUÇÕES IM Este símbolo de avi corporais. Antes de no manuseio de circ Utilize o número da segurança traduzido GUARDE ESTAS
¡Advertencia!	INSTRUCCIONES Este símbolo de avi equipo, considere lo prevención de accid texto traducido en e GUARDE ESTAS
Varning!	VIKTIGA SÄKER Denna varningssign utför arbete på någo förfaranden för att f dess översättning i SPARA DESSA AN
Figyelem	**FONTOS BIZTONS** **Ez a figyelmezeto** **bármely berendez** **okozta kockázato** **A kiadványban sz** **figyelmeztetések** **szám alapján kere** **ORIZZE MEG EZE**

Preface

FONTOS BIZTONSÁGI ELOÍRÁSOK **Ez a figyelmezeto jel veszélyre utal. Sérülésveszélyt rejto helyzetben van. Mielott bármely berendezésen munkát végezte, legyen figyelemmel az elektromos áramkörök okozta kockázatokra, és ismerkedjen meg a szokásos balesetvédelmi eljárásokkal. A kiadványban szereplo figyelmeztetések fordítása a készülékhez mellékelt biztonsági figyelmeztetések között található; a fordítás az egyes figyelmeztetések végén látható szám alapján keresheto meg.** **ORIZZE MEG EZEKET AZ UTASÍTÁSOKAT!**	**ВАЖНЫЕ ИНСТРУК** **Этот символ предуп** **которой следует оп** **выясните, каким оп** **электрических цепе** **предотвращения во** **приведенным в кон** **в переводе предупр** **СОХРАНИТЕ ЭТИ ИН**
警告	重要的安全性说明 此警告符号代表危险。 识到触电的危险，并熟 设备的安全性警告说明 请保存这些安全性说明
警告	**安全上の重要な注意事** **「危険」の意味です。人** **行うときは、電気回路** **各注意事項の番号を基** **これらの注意事項を保**
주의	중요 안전 지침 이 경고 기호는 위험을 장비에 작업을 수행하 를 방지하십시오. 각 경 번역된 안전 경고문에 이 지시 사항을 보관하
Aviso	INSTRUÇÕES IMPOR Este símbolo de aviso si Antes de trabalhar com e familiarize-se com as ao final de cada aviso p dispositivo. GUARDE ESTAS INS
Advarsel	VIGTIGE SIKKERHE Dette advarselssymbol du begynder arbejde på kredsløb, og du skal sæ efter hver advarsel for a GEM DISSE ANVISN

Preface

تحذير	صابات. قبل بدء العمل، وقوع أي حوادث. استخدم تي تأتي مع الجهاز.
Upozorenje	**VAŽNE SIGURNO** **Ovaj simbol upoz tjelesne ozljede. F električne sklopo prevedenim sigur nalazi uz pojedino** **SAČUVAJTE OVE**
Upozornění	**DŮLEŽITÉ BEZPE** **Tento upozorňujíc nebezpečí úrazu. s elektrickými obv Podle čísla na kon bezpečnostních u** **USCHOVEJTE TY**
Προειδοποίηση	ΣΗΜΑΝΤΙΚΕΣ ΟΔ Αυτό το προειδοπο προκαλέσει τραυμ κινδύνους που σχε πρακτικές για την α τέλος κάθε προειδ προειδοποιήσεις α ΦΥΛΑΞΤΕ ΑΥΤΕΣ
אזהרה	שתעבוד עם ציוד נהלים המקובלים אתר את התרגום
Opomena	ВАЖНИ БЕЗБЕДН Симболот за пред предизвика телес постои кај електр несреќни случаи. предупредување предупредувања ЧУВАЈТЕ ГИ ОВИ

Ostrzeżenie	**WAŻNE INSTRUKCJ** **Ten symbol ostrzeże powodować obrażen zapoznać się z zagro środkami zapobiega podstawie którego m urządzenia dokumen** **NINIEJSZE INSTRUK**
Upozornenie	**DÔLEŽITÉ BEZPEČN** **Tento varovný symb situácii s nebezpeče si uvedomte nebezp oboznámte sa so šta Podľa čísla na konci preložených bezpečn zariadeniu.** **USCHOVAJTE SI TEN**

Warning Only trained and qualified personnel should be allowed to install, replace, or service this equipment. Statement 1030

Warning This unit is intended for installation in restricted access areas. A restricted access area can be accessed only through the use of a special tool, lock and key, or other means of security. Use when a product has an accessible HAZ/V circuits or a DC supply that is not provided with a field wiring cover. Statement 1017

Related Documentation

Your Cisco ASR 1000 Series Routers and the Cisco IOS software running on it contain extensive features and functionality, which are documented in the following resources:

- All documentation related to the Cisco ASR 1000 Series Routers is listed in the online Cisco ASR 1000 Series Aggregation Services Routers Documentation Roadmap . Information in this master index includes troubleshooting tools and documentation, regulatory compliance and safety information, and installation and replacement information. Also see the Cisco ASR 1000 Series Port Adapter Documentation Roadmap for specific shared port adapters supported on the Cisco ASR 1000 Series Routers.

Some of the Cisco ASR 1000 Series Routers documentation that is listed on the Cisco ASR 1000 Series Aggregation Services Routers Documentation Roadmap includes:

-
  - Quick Start Guides for the Cisco ASR 1000 Series Routers. These guides provide quick reference information about chassis or parts installation procedures.
  - The Cisco ASR 1000 Series Aggregation Services Routers Troubleshooting document contains information to help you troubleshoot problems with the Cisco ASR 1000 Series Routers.
  - The Regulatory Compliance and Safety Information for Cisco ASR 1000 Series Aggregation Services Routers document provides international agency compliance, safety, and statutory information for wide-area network (WAN) interfaces for the Cisco ASR 1000 Series Routers.
  - Cisco ASR 1000 Series shared port adapter documentation.

- Cisco IOS software documentation contains Cisco IOS software configuration information and support. See the modular configuration and modular command reference publications in the set that corresponds to the software release installed on your Cisco hardware.
- To check the minimum software requirements of Cisco IOS software with the hardware installed on your router, Cisco maintains the Software Advisor tool on Cisco.com. This tool does not verify whether modules within a system are compatible, but it does provide the minimum IOS requirements for individual hardware modules or components.



Note Access to this tool is limited to users with Cisco.com login accounts.

Obtaining Documentation and Submitting a Service Request

For information on obtaining documentation, submitting a service request, and gathering additional information, see the monthly *What's New in Cisco Product Documentation* , which also lists all new and revised Cisco technical documentation, at:

http://www.cisco.com/en/US/docs/general/whatsnew/whatsnew.html

Subscribe to the *What's New in Cisco Product Documentation* as a Really Simple Syndication (RSS) feed and set content to be delivered directly to your desktop using a reader application. The RSS feeds are a free service and Cisco currently supports RSS version 2.0.

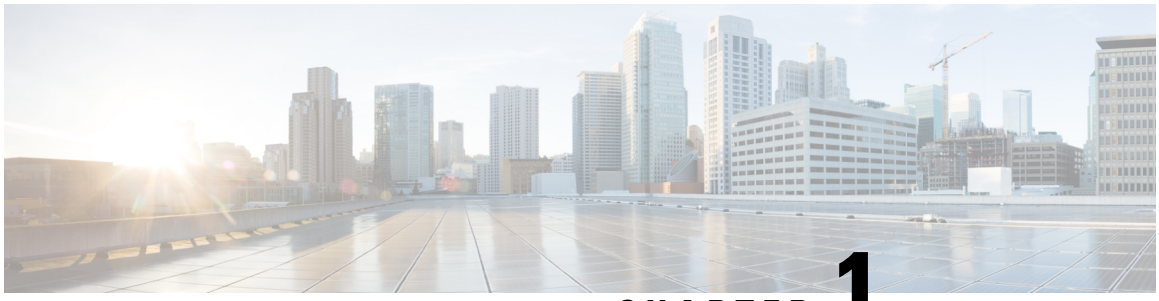

CHAPTER 1

Cisco ASR 1000 Series Routers Hardware Overview

The Cisco ASR 1000 Series Aggregation Services Routers are the next generation midrange router products. The system is based on Cisco QuantumFlow Processor technology using a family of Cisco-developed processors.

The Cisco ASR 1000 Series Routers target both enterprise and service provider applications but with higher performance and improved availability. Applications covered by Cisco ASR 1000 Series Routers are:

- Enterprise applications—Intended as the mid-size aggregation and gateway router typically residing in a regional or large branch office:
  - WAN aggregation at Cisco Enterprise core
  - Internet gateway
  - Branch or regional office aggregation
  - Remote access aggregation
- Service provider applications—Intended as the low-end service provider edge and broadband aggregation device with similar throughput:
  - High-end customer premises equipment (CPE) for business-quality Internet access
  - Service provider leased line aggregation
  - Provider edge (PE) and high-end customer edge (CE) for Layer 2 VPN or Layer 3 VPN services
  - Broadband aggregation—PPPoE/PPPoA aggregation and Service Selection Gateway (SSG)
  - Low-end Ethernet aggregation

This chapter provides an overview of the Cisco ASR 1000 Series Routers and contains the following sections:

- Cisco ASR 1000 Series Routers, on page 2
- Cisco ASR 1000 Series Router Features, on page 3
- Cisco ASR 1000 Series Routers Compatibility Information, on page 4
- Cisco ASR 1000 Series Router Configurations, on page 6
- Field-Replaceable Units, on page 7
- Functional Overview, on page 8
- Cisco Product Identification Standard, on page 16

Cisco ASR 1000 Series Routers

The Cisco ASR 1000 Series Aggregation Services Routers are the next generation Cisco midrange router products. The Cisco ASR 1000 Series Aggregation Services Routers use an innovative and powerful hardware processor technology known as the Cisco QuantumFlow Processor. The following are the Cisco ASR 1000 Series Routers:

- The Cisco ASR 1006 Router is a 12-SPA, 6-rack-unit (RU), hardware-redundant chassis with two Embedded Services Processor (ESP) slots, two Route Processor (RP) slots, and three SIP slots.
- The Cisco ASR 1004 Router is an 8-SPA, four rack-unit (RU) chassis with one ESP slot, one RP slot, and two SIP slots.
- The Cisco ASR 1002 Router is a 3-SPA, 2-RU chassis with one embedded services processor slot that comes with the route processor, Cisco ASR 1000 Series Shared Port Adapter Interface Processor (SIP), and 4 Gigabit Ethernet ports built in. For more information about the type of connectors and cables used by the 4-port Gigabit Ethernet built-in SPA, the Cisco ASR 1000 Series Aggregation Services Routers SIP and SPA Hardware Installation Guide .
- The Cisco ASR 1002-F Router is a one half-height SPA, 2-RU chassis. The embedded services processor, route processor, and SPA interface processor (SIP) are integrated with the chassis. In addition, 4 Gigabit Ethernet ports are built into the chassis.
- The Cisco ASR 1013 Router is a 24 half-height shared port adapters, 13-RU chassis that can hold 6 SIPs and provides superslots (more height and power) for the Cisco ASR1000-RP2s and Cisco ASR1000-ESPs. The Cisco ASR 1013 Router is designed with two zones (Zone 1 and Zone 0) for redundancy and superslot spacing. The Cisco ASR 1013 router has four 40G slots and two 100G slots.
- The Cisco ASR 1001 Router is a one rack-unit chassis that offers a compact form factor router that satisfies customer demands such as low power consumption and decreased usage of rack space. The Cisco ASR 1001 Router has the route processor, embedded services processor, and SIP integrated within the chassis with one half-height SPA slot.
- The Cisco ASR 1002-X Router is a 3-SPA, 2-RU chassis. The embedded services processor and route processor of this router are integrated in the chassis. There are six small form factor pluggable (SFP) Gigabit Ethernet ports. Depending on the Cisco software license that you install, the router can provide a forwarding bandwidth of 5 Gbps, 10 Gbps, 20 Gbps, or 36 Gbps.

For the single-route-processor Cisco ASR 1000 platforms (Cisco ASR 1002, Cisco ASR 1002-F, Cisco ASR 1002-X and Cisco ASR 1004), the route processor has a dual Cisco IOS Software option that allows these routers to use Cisco IOS software redundancy, Cisco high-availability features, and Nonstop Forwarding (NSF). Single-route-processor Cisco ASR 1000 platforms do not support ISSU upgrade or downgrade. Instead sub-package software upgrade is supported only if the router is running in sub-package mode.



Note The Software Redundancy feature requires the router to have 8 GB of DRAM memory.

The Cisco ASR 1000 Series Routers run Cisco IOS XE Software and introduce a distributed software architecture that moves many operating system responsibilities out of the IOS process. In this architecture, Cisco IOS, which previously was responsible for almost all of the internal software processes, now runs as one of many Cisco IOS XE processes while allowing other Cisco IOS XE processes to share responsibility for running the router.

The Cisco ASR 1000 Series Routers use the powerful Cisco QuantumFlow Processor which provides performance and resiliency for network processors.

The Cisco ASR 1000 Series Routers deliver multiple services embedded in the Cisco QuantumFlow Processor. The services supported on the Cisco Packet QuantumFlow Processor include security services (for example, encryption and firewall), quality of service (QoS), Network Based Application Recognition (NBAR), broadband aggregation, and session border controller, among others.

Cisco ASR 1000 Series Router Features

The Cisco ASR 1000 Series Aggregation Services routers use different field replaceable units:

- Cisco ASR 1000 Series route processor— Cisco ASR1000-RP1, ASR1000-RP2
- Cisco ASR 1000 Series embedded services processors (ESPs):
  - Cisco ASR1000-ESP5
  - Cisco ASR1000-ESP10
  - Cisco ASR1000-ESP20
  - Integrated Cisco ASR1002-ESP-F
  - Cisco ASR1000-ESP40
  - Cisco ASR1000-ESP100
  - Cisco ASR1000-ESP200
  - Cisco ESP-100X
  - Cisco ESP-200X



Note See xref Chapter 3, “Cisco ASR 1000 Series Routers Embedded Services Processors” for detailed information about Cisco ESPs.

- Cisco ASR 1000 SPA Interface Processors (SIPs):
  - Cisco ASR1000-SIP10
  - Cisco ASR1002-SIP10-F
  - Cisco ASR1000-SIP-40



Note See xref Chapter 4, “Cisco ASR 1000 Series Router SPA Interface Processors (SIPs)” for detailed information about Cisco SIPs.

Cisco ASR 1000 Series Routers provide the following features:

- Online insertion and removal (OIR) capability
- Route processor and embedded services processor redundancy in the Cisco ASR 1000 Series Routers (Cisco ASR 1013 Router and Cisco ASR 1006 Router)
- Control processor for ASR 1000 Series SPA Interface Processor
- Control processor for embedded services processors (Cisco ASR1000-ESP5, Cisco ASR1000-ESP10, Cisco ASR1000-ESP20, integrated Cisco ASR1002-ESP-F, Cisco ASR1000-ESP40, Cisco ASR1000-ESP100, and Cisco ASR1000-ESP200)
- 10 Gbps and 20 Gbps interconnect between Cisco QuantumFlow Processor with redundant Cisco ASR 1000 Series ESP to mirror data for stateful features

- Power supply redundancy
- Environmental monitoring and reporting functions
- Family of routers using common hardware and software architecture
- Centralized forwarding design (all network traffic passes through one engine)
- Front-to-back airflow—Allows you to mount the router from either front or back into 19-inch equipment rack
- Supports half-height shared port adapters (HHSPAs) and full-height shared port adapters (FHSPAs)

Note The Cisco ASR 1001 Router does not support full-height SPAs.

- Single midplane design (all connectors on one interface midplane)
- One 10/100/1000-Mbps Ethernet Management port—To be used only as a management port; not to be used as an Ethernet interface port
- Both quarter-rate (87.5 MHz) and full-rate (350 MHz) shared port adapter operation

The Cisco QuantumFlow Processor processing provides:

- Architecture to address Cisco ASR 1000 Series router performance, cost, power, and feature velocity
- Next Generation forwarding and queuing subsystems for Cisco routers to provide data path acceleration.

The Cisco ASR 1000 Series route processor system performs the following system management functions:

- Sending and receiving routing protocol updates
- Managing tables, caches, and buffers
- Monitoring interface and environmental status
- Providing Simple Network Management Protocol (SNMP) management through the console and Telnet interface
- Accounting for and switching of data traffic
- Booting and reloading images

Cisco ASR 1000 Series Routers Compatibility Information

The following table lists the Cisco ASR 1000 Series Routers configurations. It shows the combination of chassis, Cisco ASR1000-ESP, and Cisco ASR1000-SIP supported on the Cisco ASR 1000 Series Routers.

Table 1: ESP-100X and ESP-200X compatibility with Ethernet Line Cards and Carrier Cards

	ESP-100X	ESP-200X
ASR1000-SIP40	Yes	Yes
ASR1000-MIP100	Yes	Yes
ASR1000-6TGE	Yes	Yes
ASR1000-2T+20X1GE	Yes	Yes

Note The Cisco ASR 1001 Router supports Cisco ASR1000-ESP2.5 up to Cisco ASR1000-ESP5. The Cisco ASR 1002 Router, Cisco ASR 1002-F Router, and Cisco ASR 1002-X Router do not support Cisco ASR1000-ESP20, Cisco ASR1000-ESP40, Cisco ASR1000-ESP100, or Cisco ASR1000-RP2. Cisco ASR1000-ESP100 can be installed only on Cisco ASR 1006 and Cisco ASR 1013 routers. Cisco ASR1000-ESP200 can be installed only on Cisco ASR 1013 routers.

Hardware Compatibility

The following table lists the Cisco ASR 1000 Series Routers that support and are compatible with Cisco hardware products.

Table 2: Cisco ASR 1000 Series Routers and Component Compatibility and Support Matrix

Hardware Component	Cisco ASR 1013 Router	Cisco ASR 1006 Router	Cisco ASR 1004 Router	Cisco ASR 1002 Router and Cisco ASR 1002-F Router	Cisco ASR 1001 Router	Cisco ASR 1002-X Router
ASR1000-ESP5	Not compatible	Not compatible	Not supported	Supported	Not applicable	Not applicable
ASR1000-ESP10	Not compatible	Supported	Supported	Supported	Not applicable	Not applicable
ASR1000-ESP20	Not supported	Supported	Supported	Not compatible	Not applicable	Not applicable
ASR1000-ESP40	Supported	Supported	Supported	Not compatible	Not applicable	Not applicable
ASR1000-ESP100	Supported	Supported	Not compatible	Not compatible	Not applicable	Not applicable
ASR1000-ESP200	Supported	Not compatible	Not compatible	Not compatible	Not compatible	Not compatible
ASR1000-RP1	Not compatible	Supported	Supported	Not applicable	Not applicable	Not applicable
ASR1000-RP2	Supported	Supported	Supported	Not applicable	Not applicable	Not applicable
ASR1000-SIP10	Supported	Supported	Supported	Not applicable	Not applicable	Not applicable
ASR1000-SIP40	Supported	Supported	Supported	Not applicable	Not applicable	Not applicable
ASR1000 PEMs	ASR 1013 PEM supported	ASR 1013 PEM supported ASR 1006 PEM supported	ASR1004 PEM supported	ASR 1002 PEM supported	Supported with its own AC and DC power supplies	ASR 1002 PEM supported

The following is the outcome of upgrades performed using incompatible combinations of hardware components:

- The embedded services processor card is disabled and an error message is generated in either of the following scenarios:
  - Cisco ASR1000-ESP20, Cisco ASR1000-ESP40, or Cisco ASR1000-ESP100 is inserted in the Cisco ASR 1002 Router.

- Cisco ASR1000-ESP5 is inserted into Cisco ASR 1004 Router, Cisco ASR 1006 Router, or Cisco ASR 1013 Router.

- The Complex Programmable Logic Device (CPLD) field programmable upgrade for Cisco ASR1000-SIP10 cannot be performed in slot 5. Cisco ASR1000-SIP10 can be upgraded only in any one of the slots from slots 0 to 4.
- If Cisco ASR1000-RP1 is inserted into Cisco ASR 1013 Router, the card is disabled and an error message is generated

The Cisco ASR 1013 Router supports only the following components:

- Cisco ASR1000-RP2
- Cisco ASR1000-ESP40 or Cisco ASR1000-ESP200
- Cisco ASR1000-SIP10 or Cisco ASR1000-SIP40

Existing Cisco ASR1000-RP2 and Cisco ASR1000-SIP10 cannot be used as is in the Cisco ASR 1013 Router. These two components must be upgraded to support Cisco IOS XE Release 3.1S on the Cisco ASR 1013 Router.

Cisco ASR 1000 Series Router Configurations

The Cisco ASR 1000 Series Routers are available in different packaging configurations. Some of the chassis configurations are modular with separate field-replaceable units (FRUs) for the Cisco ASR 1000 Series Route Processors, the Cisco ASR 1000 Series Embedded Services Processors, and the shared port adapters.

All FRUs (Cisco ASR 1000 Series Route Processor 1, Cisco ASR 1000 Series Embedded Services Processor, and SPAs) are designed to work in the different chassis models. The power supplies and fan modules are chassis specific. The SPAs are supported in all chassis configurations although there are SPA restrictions in the Cisco ASR 1002 Router and the Cisco ASR 1002-F Router.

The following table lists the Cisco ASR 1000 Series Router configurations. In this table, HH is half height and FH is full height.

Table 3: Cisco ASR 1000 Series Router Product Family

Chassis	Number of ESP Slots	Maximum SPAs Supported	Number of RP Slots	Number of SIP Slots	Maximum Bandwidth
Cisco ASR 1001	Built-in ESP 2.5 Gbps/5 Gbps	1 HH Built-in ports 4 x 1GE SFP	One built-in 2.13GHz dual core Intel Xeon CPU	Fixed, SIP10	Up to 5 Gbps (with software license)
Cisco ASR 1013	2 superslots	24 HH	2 superslots	6	Up to 200 Gbps
Cisco ASR 1006	2	12 HH	2	3	Up to 100 Gbps
Cisco ASR 1004	1	8 HH	1	2	Up to 40 Gbps
Cisco ASR 1002	1	3 HH (1 built-in 4x1GE)	1 integrated (RP1)	1 integrated (SIP10)	Up to 10 Gbps
Cisco ASR 1002-F	1	1 HH (1 built-in 4x1 GE)	1 integrated (RP1)	1 integrated (SIP10)	Up to 2.5 Gbps

Chassis	Number of ESP Slots	Maximum SPAs Supported	Number of RP Slots	Number of SIP Slots	Maximum Bandwidth
Cisco ASR 1002-X	1	3 HH and 1 built-in 6x1 GE	1 integrated	1 integrated	Up to 36 Gbps (with software license)

Field-Replaceable Units

The Cisco ASR 1000 Series routers are easy to service; many of their major components are field-replaceable units (FRUs). The following are the Cisco ASR 1000 Series Router FRUs:

- Cisco ASR 1000 Series route processors: RP1 and RP2
- Cisco ASR 1000 Series embedded services processors: Cisco ASR1000-ESP5, Cisco ASR1000-ESP10, Cisco ASR1000-ESP20, Cisco ASR1000-ESP40, Cisco ASR1000-ESP100, and Cisco ASR1000-ESP200.
- Shared port adapters
- Cisco ASR 1000 Series shared port adapter interface processors (SIPs)
- Cisco ASR 1000 Series RP1 internal hard drive
- Cisco ASR 1000 Series RP1 DIMM memory module (Note that the integrated Cisco ASR1000-RP1 on the Cisco ASR 1002 Router DIMM memory module is not field-replaceable.)
- USB flash token memory stick
- AC and DC power supplies
- Bracket kit—Custom cable-management brackets are mounted to each rack-mount bracket to provide cable management to both sides of the chassis (parallel with card orientation). These brackets are screw-mounted to the rack brackets to enable easy installation and removal. There is a rack-mount bracket for each chassis:
  - For the Cisco ASR 1006 Router, the cable-management brackets contain five independent cable-management U features to provide cable dressing for each card module slot. For SIPs, these brackets work in tandem with SPA product feature cable management to allow installation and removal of adjacent cards without having to remove cables.
  - For the Cisco ASR 1004 Router, the cable-management brackets contain three independent cable-management U features to provide cable dressing for each card module slot. For SIPs, these brackets work in tandem with SPA product feature cable management to allow installation and removal of adjacent cards without having to remove cables.
  - For the Cisco ASR 1002 Router, the cable-management brackets contains one independent cable-management U feature to provide cable dressing for each card module slot. These brackets work in tandem with SPA product feature cable management to allow installation and removal of adjacent cards without having to remove cables.



Note The Cisco ASR 1002-F Router and Cisco ASR 1002-X Router use the same accessories as the Cisco ASR 1002 Router.

- • For the Cisco ASR 1013 Router, the cable-management brackets contain four independent cable-management U features to provide cable dressing for modules. There are two brackets with four U-feature hooks for each side of the chassis.

- For the Cisco ASR 1001 Router, the cable-management bracket contains one independent cable-management U feature to provide cable dressing for each card module slot.

Functional Overview

This section contains the following topics:

Chassis Slot and Logical Interface Numbering

The Cisco ASR 1000 Series Routers have a slot numbering system located on both sides of the card module location. The chassis slots are physically numbered from zero starting at the bottom of the chassis. This section describes the slot numbering for the Cisco ASR 1000 Series Routers:

Cisco ASR 1000 Series SPA Interface Processor (SIP) subslots begin their numbering with "0" and have a horizontal orientation. The SIP subslot numbering is indicated by a small numeric label beside the subslot on the faceplate. Some commands allow you to display information about the SPA itself, such as **show idprom module** and **show hw-module subslot**. These commands require you to specify both the physical location of the SIP and SPA in the format, Slot/Subslot, where:

- Slot—Specifies the chassis slot number in the Cisco ASR 1000 Series Routers where the SIP is installed.
- Subslot—Specifies a subslot of the SIP where the SPA is installed.
- Superslots (power zone 0 and power zone 1)—Specifies the Cisco ASR 1013 Router slot spacing divided into zones.



Note See the router-specific chapter for chassis slot numbering and naming descriptions.

MAC Address Information

The *Media Access Control (MAC)* or *hardware* address is a standardized data link layer address that is required for certain network interface types. These addresses are specific and unique to each port and are not used by other devices in the network. The Cisco ASR 1000 Series Routers assign and control the MAC addresses of its shared port adapters.

You can identify shared port adapter slots by using software commands. To display information about:

- All shared port adapter slots, use the **show interfaces** command.
- A specific shared port adapter slot, use the **show interfaces** command with the shared port adapter type and slot number in the format **show interfaces** *port-adapter-type slot-number*/port-number.



Note If you abbreviate the command (**sh int**) and do not specify shared port adapter type and slot number (or arguments), the system interprets the command as **show interfaces** and displays the status of all shared port adapters and ports.

The MAC addresses are assigned to the slots in sequence. For example, in the Cisco ASR 1006 Router, the first address is assigned to slot 0 and the last address is assigned to slot 6. The actual MAC address assignment

is 16 MAC addresses per SPA slot for half-height SPAs and 64 per SPA slot for full-height SPAs. Also, the Cisco ASR 1000 Series RP1 RP Management Ethernet port is assigned one MAC address from the end of the pool and for the Cisco ASR 1006 Router with two Cisco ASR 1000 RP1s, each ASR10000 RP1 is assigned one MAC address.

Using this address scheme, you can remove shared port adapters and insert them into other routers without causing the MAC addresses to move around the network or be assigned to multiple devices.

If the MAC addresses were stored on each shared port adapter, online insertion and removal would not function because you could never replace one shared port adapter with an identical one; the MAC addresses would always be different. Also, each time a shared port adapter was replaced, other devices on the network would have to update their data structures with the new address. If the other devices did not update quickly enough, the same MAC address could appear in more than one device at the same time.



Note Storing the MAC addresses for every slot in one central location means the addresses stay with the memory device on which they are stored.

Online Insertion and Removal

In the modular chassis configurations, most Cisco ASR 1000 Series Router field-replaceable units (FRUs) support online insertion and removal (OIR). However, the removal of critical non-redundant FRUs will result in service interruption.



Note As you disengage the shared port adapter from the router, online insertion and removal (OIR) administratively shuts down all active interfaces in the shared port adapter.

Online insertion and removal (OIR) feature allows you to install and replace shared port adapters while the router is operating; you do not need to notify the software or shut down the system power, although you should not run traffic through the shared port adapter you are removing while it is being removed. Online insertion and removal is a method that is seamless to end users on the network, maintains all routing information, and preserves sessions.

All SPA OIR events are independent of one another. An OIR event of a single SPA does not affect the other SPAs in that ASR1000-SIP10 or any other system function.

The following items describe the OIR differences between the Cisco ASR 1002 Router, the Cisco ASR 1002-F Router, and the Cisco ASR 1002-X Router:

- The Cisco ASR 1002 Router supports the integrated Cisco ASR1000-RP1, which is a combined route processor and carrier card that are not field-replaceable units. The Cisco ASR1000-ESP5 or ASR1000-ESP10 are field-replaceable units.
- The Cisco ASR 1002-F Router supports an integrated route processor Cisco ASR1002-RP1 and an integrated embedded services processor Cisco ASR1000-ESP-F, which are not field-replaceable. The Cisco ASR1002-SIP10-F module is not removable; but the one half-height SPA is a field-replaceable unit.
- The Cisco ASR 1002-X Router supports an integrated route processor (Cisco ASR1002-RP2) and an integrated embedded services processor. Both these components are not field-replaceable. The router has a built-in 6x1GE SPA that occupies the SPA Bay 0. In addition, there are three half-height SPA bays for field-replaceable SPAs.

The following is a functional description of OIR for background information only; for specific procedures for installing and replacing a shared port adapter in Cisco ASR 1000 Series Routers, refer to the online configuration note for each shared port adapter.

When you remove or insert a shared port adapter in a Cisco ASR 1000 Series Router, the Control Processor notifies the Cisco ASR1000-RP1, which in turn notifies the forwarding engine control processor (FECP), and then performs the following steps:

- Rapidly scans the midplane for configuration changes.
- Initializes all newly inserted shared port adapters, noting any removed interfaces and placing them in the administratively shutdown state.
- Brings all previously configured interfaces on the shared port adapter back to the state they were in when they were removed. Any newly inserted interfaces are put in the administratively shutdown state, as if they were present (but not configured) at boot time. If a similar shared port adapter type is reinserted into a slot, its ports are configured and brought online up to the port count of the original SPA.

Environmental Monitoring and Reporting Functions

Environmental monitoring and reporting functions allow you to maintain normal system operation by identifying and resolving adverse conditions prior to loss of operation.

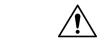

Caution To prevent overheating the chassis, ensure that your system is drawing cool inlet air. Over temperature conditions can occur if the system is drawing in the exhaust air of other equipment. Ensure adequate clearance around the sides of the chassis so that cooling air can flow through the chassis interior unimpeded and exhaust air exits the chassis and is not drawn into the inlet vent of another device.

Environmental Monitoring

The environmental monitoring functions use sensors to monitor the temperature of the cooling air as it moves through the chassis.

The local power supplies provide the ability to monitor:

- Input and output voltage
- Output current
- Outlet temperature

The Cisco ASR 1000 Series Routers are expected to meet the following environmental operating conditions:

- Operating Temperature Nominal: 5° to 40°C
- Operating Temperature Short Term: –5° to +55°C (not applicable to the Cisco ASR 1001 Router)
- Operating Humidity Nominal: 5% to 85% noncondensing
- Operating Humidity Short Term: 5% to 90% noncondensing (not applicable to the Cisco ASR 1001 Router)
- Operating Altitude: 198 to 13,200 feet (60 to 4000 meters)
- DC Input Range: –40.5 to –72 VDC
- AC Input Range: 85 to 264 VAC

If the air temperature exceeds a defined threshold, the system controller displays warning messages on the console terminal, and if the temperature exceeds the shutdown threshold, the system controller shuts down the system.

In addition, the power supplies monitor internal power supply temperatures and voltages. A power supply is either within tolerance (normal) or out of tolerance (critical). If an internal power supply temperature or voltage reaches a critical level, the power supply shuts down without any interaction with the system processor.

The environmental monitoring functions use the following levels of status conditions to monitor the system:

- Normal—All monitored parameters are within normal tolerances.
- Warning—The system has exceeded a specified threshold. The system continues to operate, but operator action is recommended to bring the system back to a normal state.
- Critical—An out-of-tolerance temperature or voltage condition exists. The system continues to operate; however, the system is approaching shutdown. Immediate operator action is required.
- Shutdown—The processor has detected a temperature condition that could result in physical damage to system components and has disabled DC power to all internal components. This condition requires immediate operator action. All DC power remains disabled until you toggle the power switch. Before any shutdown, the system logs the status of monitored parameters in NVRAM so you can retrieve it later to help determine the cause of the problem.
- Power supply shutdown—The power supply detected an internal out-of-tolerance overvoltage, overcurrent, or temperature condition and shut itself down. All DC power remains disabled until you toggle the power switch.

Fan Failures

When the system power is on, all fans should be operational. The system continues to operate if a fan fails. When a fan fails, the system displays the following message:

```
router: 00:03:46:%ENVM-3-BLOWER:Fan 2 may have failed
```

If the air temperature exceeds a defined threshold, the system controller displays warning messages on the console terminal, and if the temperature exceeds the shutdown threshold, the system controller shuts down the system.

If the system does shut down because the temperature exceeded the shutdown threshold, the system displays the following message on the console screen and in the environment display when the system restarts:

```
Queued messages:
%ENVM-1-SHUTDOWN: Environmental Monitor initiated shutdown
```

Reporting Functions

The chassis manager on the forwarding engine control processor manages the local resources of the forwarding processor. It manages the ESI (Enhanced Serdes Interconnect) which are the datapath links on the midplane connecting the Cisco ASR 1000 Series RP1s, SIPs, and standby ESP modules to the active Cisco ASR 1000 Series Embedded Services Processor. It communicates with the chassis manager on the Cisco ASR 1000 Series Route Processor 1 to report the status and health, including detected hardware failures, ESI status, software process status, and the state of thermal sensors.

The Cisco ASR 1000 Series Routers display warning messages on the console if the chassis interface-monitored parameters exceed a threshold. You can also retrieve and display environmental status reports with the following commands:

- **show environment all**
- **show version**
- **show inventory**
- **show platform**

- **show platform software status control-processor**
- **show diag**

Parameters are measured and reporting functions are updated every 60 seconds. A brief description of each of these commands follows.



Note The example outputs displayed in this section are from the Cisco ASR 1004 Router. Similar output is displayed for all Cisco ASR 1000 Series Routers.

```
Router# show environment all
Sensor List:  Environmental Monitoring
 Sensor           Location          State             Reading
 V1: VMA          F0                Normal            1791 mV
 V1: VMB          F0                Normal            1196 mV
 V1: VMC          F0                Normal            1191 mV
 V1: VMD          F0                Normal            1093 mV
 V1: VME          F0                Normal            996 mV
 V1: 12v          F0                Normal            11894 mV
 V1: VDD          F0                Normal            3261 mV
 V1: GP1          F0                Normal            900 mV
 V2: VMA          F0                Normal            3286 mV
 V2: VMB          F0                Normal            2495 mV
 V2: VMC          F0                10% high          1796 mV
 V2: VMD          F0                Normal            1093 mV
 V2: VME          F0                Normal            996 mV
 V2: VMF          F0                Normal            996 mV
 V2: 12v          F0                Normal            11850 mV
 V2: VDD          F0                Normal            3261 mV
 V2: GP1          F0                10% high          898 mV
 Temp: Inlet      F0                Normal            29 Celsius
 Temp: Asic1      F0                Normal            47 Celsius
 Temp: Exhaust1   F0                Normal            36 Celsius
 Temp: Exhaust2   F0                Normal            36 Celsius
 Temp: Asic2      F0                Normal            43 Celsius
 V1: VMA          0                 Normal            1093 mV
 V1: VMB          0                 Normal            1196 mV
 V1: VMC          0                 Normal            1494 mV
 V1: VMD          0                 Normal            1791 mV
 V1: VME          0                 Normal            2490 mV
 V1: VMF          0                 Normal            3291 mV
 V1: 12v          0                 Normal            11894 mV
 V1: VDD          0                 Normal            3266 mV
 V1: GP1          0                 Normal            747 mV
 V1: GP2          0                 Normal            898 mV
 V2: VMA          0                 20% low           0 mV
 V2: VMB          0                 Normal            1201 mV
 V2: VMC          0                 20% low           0 mV
 V2: VMD          0                 20% low           0 mV
 V2: VME          0                 20% low           0 mV
 V2: VMF          0                 20% low           0 mV
 V2: 12v          0                 Normal            11909 mV
 V2: VDD          0                 Normal            3271 mV
 V2: GP2          0                 Normal            903 mV
 Temp: Left       0                 Normal            25 Celsius
 Temp: Center     0                 Normal            26 Celsius
 Temp: Asic1      0                 Normal            36 Celsius
 Temp: Right      0                 Normal            23 Celsius
 PEM Iout         P0                Normal            17 A
 PEM Vout         P0                Normal            12 V AC
```

```
PEM Vin          P0                Normal            115 V AC
Temp: PEM        P0                Normal            27 Celsius
Temp: FC         P0                Fan Speed 65%     26 Celsius
Temp: FM         P1                Normal            24 Celsius
Temp: FC         P1                Fan Speed 65%     26 Celsius
V1: VMA          R0                Normal            1098 mV
V1: VMB          R0                Normal            3295 mV
V1: VMC          R0                Normal            2495 mV
V1: VMD          R0                Normal            1791 mV
V1: VME          R0                Normal            1499 mV
V1: VMF          R0                Normal            1201 mV
V1: 12v          R0                Normal            11938 mV
V1: VDD          R0                Normal            3261 mV
V1: GP1          R0                Normal            903 mV
V1: GP2          R0                Normal            1242 mV
Temp: CPU        R0                Normal            33 Celsius
Temp: Outlet     R0                Normal            32 Celsius
Temp: Inlet      R0                Normal            26 Celsius
Temp: Asic1      R0                Normal            32 Celsius
```

The **show version** command displays the system hardware configuration, software version, and names and sources of configuration files and boot images.

The following is sample output of the **show version**command:

```
Router# show version
Cisco IOS Software, IOS-XE Software (PPC_LINUX_IOSD-ADVENTERPRISEK9-M), Version 12.2(33)XNA,
 RELEASE SOFTWARE
Technical Support: http://www.cisco.com/techsupport
Copyright (c) 1986-2008 by Cisco Systems, Inc.
Compiled Thu 01-May-08 00:29 by mcpre
Cisco IOS-XE software, Copyright (c) 1986-2008 by Cisco Systems, Inc.
All rights reserved. Certain components of Cisco IOS-XE software are
licensed under the GNU General Public License (GPL) Version 2.0. The
software code licensed under GPL Version 2.0 is free software that comes
with ABSOLUTELY NO WARRANTY. You can redistribute and/or modify such
GPL code under the terms of GPL Version 2.0. For more details, see the
documentation or License Notice file accompanying the IOS-XE software,
or the applicable URL provided on the flyer accompanying the IOS-XE
software.
A summary of U.S. laws governing Cisco cryptographic products may be found at:
http://www.cisco.com/wwl/export/crypto/tool/stqrg.html

If you require further assistance please contact us by sending email to
export@cisco.com.
cisco ASR1004 (RP1) processor with 757182K/6147K bytes of memory.
2 Packet over SONET interfaces
32768K bytes of non-volatile configuration memory.
2097152K bytes of physical memory.
439807K bytes of eUSB flash at bootflash:.
39004543K bytes of SATA hard disk at harddisk:.

Configuration register is 0x0
```

The **show inventory** command displays an extended report that includes the product inventory listing of all Cisco products installed in the networking device.

The following is sample output of the **show inventory** command:

```
Router# show inventory
NAME: Chassis, DESCR: Cisco ASR1004 Chassis
PID: ASR1004           , VID: V00, SN:
```

```
NAME: module 0, DESCR: Cisco ASR1000 SPA Interface Processor 10
PID: MCP-CC            , VID: V00, SN: JAB1104064G

NAME: SPA subslot 0/1, DESCR: 2-port OC3/STM1 POS Shared Port Adapter
PID: SPA-2XOC3-POS     , VID: V01, SN: JAB10006095Z

NAME: subslot 0/1 transceiver 0, DESCR: OC3 SR-1/STM1 MM
PID: N/A                , VID:     , SN: 2008692

NAME: SPA subslot 0/2, DESCR: 4-port T3/E3 Serial Shared Port Adapter
PID: SPA-4XT3/E3       , VID: V01, SN: JAB09210247

NAME: module R0, DESCR: Cisco ASR1000 Route Processor 1
PID: ASR1000-RP1       , VID: V00, SN: JAB110200CQ

NAME: module F0, DESCR: Cisco ASR1000 Embedded Services Processor, 10Gbps
PID: ASR1000-ESP10     , VID: V00, SN: JAB111101A1

NAME: Power Supply Module 0, DESCR: Cisco ASR1004 AC Power Supply
PID: ASR1004-PWR-AC    , VID: V00, SN: ART1103K00C

NAME: Fan Module 1, DESCR: Cisco ASR1004 Fan Module
PID: ASR1004-FAN       , VID: V00, SN: ART1052L01U
```

The **show platform** command displays platform information.

The following is sample output of the **show platform** command:

```
Router# show platform
Chassis type: ASR1004

Slot      Type                State                 Insert time (ago)
--------- ------------------- --------------------- -----------------
0         MCP-CC              ok                    16:20:27
 0/1      SPA-2XOC3-POS       ok                    16:18:49
 0/2      SPA-4XT3/E3         ok                    16:18:56
R0        ASR1000-RP1         ok, active            16:20:27
F0        ASR1000-ESP10       ok, active            16:20:27
P0        ASR1004-PWR-AC      ok                    16:19:27
P1        ASR1004-FAN         ok                    16:19:27

Slot      CPLD Version        Firmware Version
--------- ------------------- ----------------------------------------
0         07091401            12.2(33r)XN1
R0        0706210B            12.2(33r)XN1
F0        07051650            12.2(33r)XN1
```

The **show platform software status control-processor** command displays the average load, memory usage, and CPU utilization levels at which the router is running. The output also specifies whether the levels of these system health parameters are within defined thresholds.

The following is sample output of the **show platform software status control-processor** command:

```
Router# show platform software status control-processor
RP0: online, statistics updated 4 seconds ago
Load Average: healthy
  1-Min: 0.00, status: healthy, under 5.00
  5-Min: 0.00, status: healthy, under 5.00
  15-Min: 0.00, status: healthy, under 5.00
Memory (kb): healthy
  Total: 8133932
  Used: 1754156 (21%), status: healthy, under 90%
  Free: 6379776 (78%), status: healthy, over 10%
```

```
  Committed: 5059032 (62%), status: healthy, under 90%
Per-core Statistics
CPU0: CPU Utilization (percentage of time spent)
  User:  0.09, System:  0.00, Nice:  0.00, Idle: 99.80
  IRQ:  0.09, SIRQ:  0.00, IOwait:  0.00
CPU1: CPU Utilization (percentage of time spent)
  User:  0.00, System:  0.00, Nice:  0.00, Idle:100.00
  IRQ:  0.00, SIRQ:  0.00, IOwait:  0.00
ESP0: online, statistics updated 8 seconds ago
Load Average: healthy
  1-Min: 0.02, status: healthy, under 5.00
  5-Min: 0.02, status: healthy, under 5.00
  15-Min: 0.00, status: healthy, under 5.00
Memory (kb): healthy
  Total: 3895500
  Used: 547868 (13%), status: healthy, under 90%
  Free: 3347632 (81%), status: healthy, over 10%
  Committed: 2509772 (60%), status: healthy, under 300%
Per-core Statistics
CPU0: CPU Utilization (percentage of time spent)
  User:  1.20, System:  2.10, Nice:  0.00, Idle: 96.70
  IRQ:  0.00, SIRQ:  0.00, IOwait:  0.00
SIP0: online, statistics updated 7 seconds ago
Load Average: healthy
  1-Min: 0.01, status: healthy, under 5.00
  5-Min: 0.02, status: healthy, under 5.00
  15-Min: 0.00, status: healthy, under 5.00
Memory (kb): healthy
  Total: 483592
  Used: 366728 (69%), status: healthy, under 90%
  Free: 116864 (22%), status: healthy, over 10%
  Committed: 365968 (69%), status: healthy, under 90%
Per-core Statistics
CPU0: CPU Utilization (percentage of time spent)
  User:  0.40, System:  0.50, Nice:  0.00, Idle: 99.10
  IRQ:  0.00, SIRQ:  0.00, IOwait:  0.00
SIP1: online, statistics updated 6 seconds ago
Load Average: healthy
  1-Min: 0.00, status: healthy, under 5.00
  5-Min: 0.01, status: healthy, under 5.00
  15-Min: 0.00, status: healthy, under 5.00
Memory (kb): healthy
  Total: 483592
  Used: 351388 (67%), status: healthy, under 90%
  Free: 132204 (25%), status: healthy, over 10%
  Committed: 365840 (69%), status: healthy, under 90%
Per-core Statistics
CPU0: CPU Utilization (percentage of time spent)
  User:  1.80, System:  2.50, Nice:  0.00, Idle: 95.59
  IRQ:  0.00, SIRQ:  0.10, IOwait:  0.00
```

The **show diag slot R0 eeprom detail** command displays the configuration hardware information including DRAM and Static RAM (SRAM) on line cards. To display more details than the normal **show diag slot R0 eeprom detail** command output, use **show diag [slot-number] [details]**.

The following is sample output of the **show diag slot R0 eeprom detail** command:

```
Router# show diag slot R0 eeprom detail

Slot R0 EEPROM data:

EEPROM version : 4
Compatible Type : 0xFF
Controller Type : 1460
```

```
Hardware Revision : 4.7
PCB Part Number : 73-10253-04
Board Revision : 03
Deviation Number : 0-0
Fab Version : 04
PCB Serial Number : JAB110200CQ
RMA Test History : 00
RMA Number : 0-0-0-0
RMA History : 00
Top Assy. Part Number : 68-2625-04
Product Identifier (PID) : ASR1000-RP1
CLEI Code : UNASSIGNED
Version Identifier (VID) : V00
Manufacturing Test Data : 00 00 00 00 00 00 00 00
Field Diagnostics Data : 00 00 00 00 00 00 00 00
Asset ID : AAAAAAAAAAAAAAAAAAAAAAAAAAAAAAAA
```

Cisco Product Identification Standard

This section describes the Cisco products and services product identification standard. This feature provides you with the ability to effectively integrate and manage Cisco products in your network and business operations.

Unique Device Identifier

The Unique Device Identifier (UDI) is the Cisco product identification standard for hardware products. A product identification standard removes barriers to enterprise automation and can help you reduce operating expenses.

The UDI provides a consistent electronic, physical, and associated business-to-business information product identification standard.

The UDI is a combination of five data elements. The following table lists the UDI elements.

Table 4: Cisco UDI Elements

UDI Data Element	Electronic Visibility	Physical Visibility	Description
PID	Yes	Yes	Product ID, also known as product name, model name, product number
VID	Yes	Yes	Version ID
SN	Yes	Yes	Serial number, the unique instance of the PID (see xref Figure 1-1, Figure 1-2, Figure 1-3, Figure 1-4, Figure 1-5, and Figure 1-6 in the next section for location of the serial number label)
Entity Name	Yes	No	Type, such as chassis, slot, or power supply
Product Description	Yes	No	Additional product information

The combination of serial number and product ID (PID) is unique and consistent across all Cisco products. The PID that is coded on hardware is called a base product identifier.

Additional orderable PIDs may be associated to a base PID. For instance, an orderable PID may describe a packaging configuration for a product or a bundled group of products sold, tested, and shipped together. Specific unique device identifier (UDI) benefits include the following:

- Identifies:
  - Individual Cisco products in your networks
  - PIDs and SNs for service and replaceable products
  - VIDs for product version visibility
- Facilitates discovery of products subject to recall or upgrade
- Enhances inventory automation of Cisco products

The Cisco product identification standard provides the following features:

- Version visibility—Cisco continuously improves products through feature additions. Product changes are indicated by incrementing the version ID (VID), which provides version visibility to help you understand and manage product changes. The VID management ensures consistency of changes from product to product.
- Operating expense reduction— The Cisco UDI provides accurate and detailed network inventory information; identifying each Cisco product in a network element through a standard interface. Cisco operating systems can view and use this data, allowing you to automate your electronic inventory.
- Consistency across product layers—The UDI is designed into hardware products and cannot overwritten in error. Operating and management systems discover the UDI through standard interfaces and display the UDI in standard outputs. Standard interfaces include the IETF standard ENTITY-MIB.

Note Go to the following URL for complete information on the product identification standard: http://www.cisco.com/go/udi/

Serial Number Label Location

This section contains graphics of each chassis showing the location of the serial number label:

The following figure shows the serial number location for the Cisco ASR 1006 Router.

Figure 1: Cisco ASR 1006 Router Serial Number Label Location

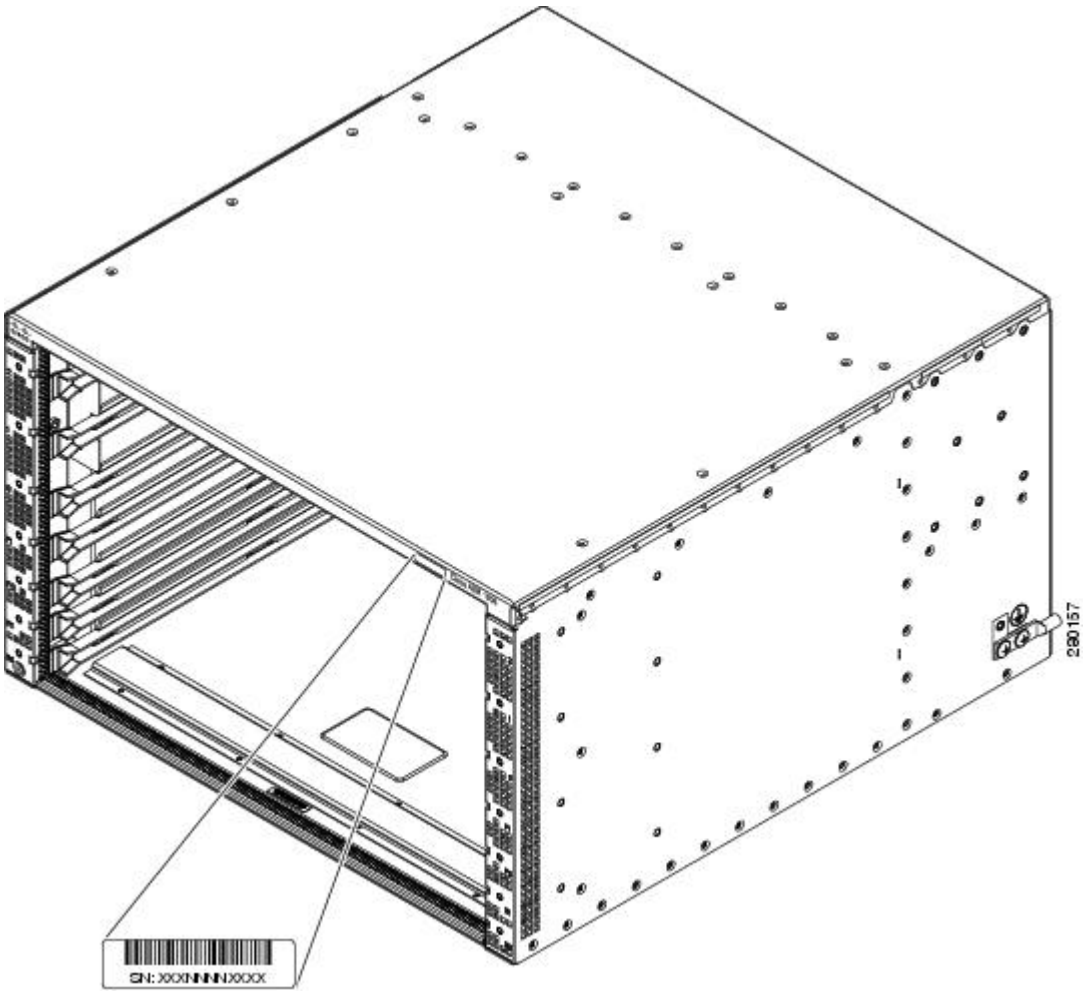

The following figure shows the serial number label location for the Cisco ASR 1002 Router.

Figure 2: Cisco ASR 1002 Router Serial Number Label Location

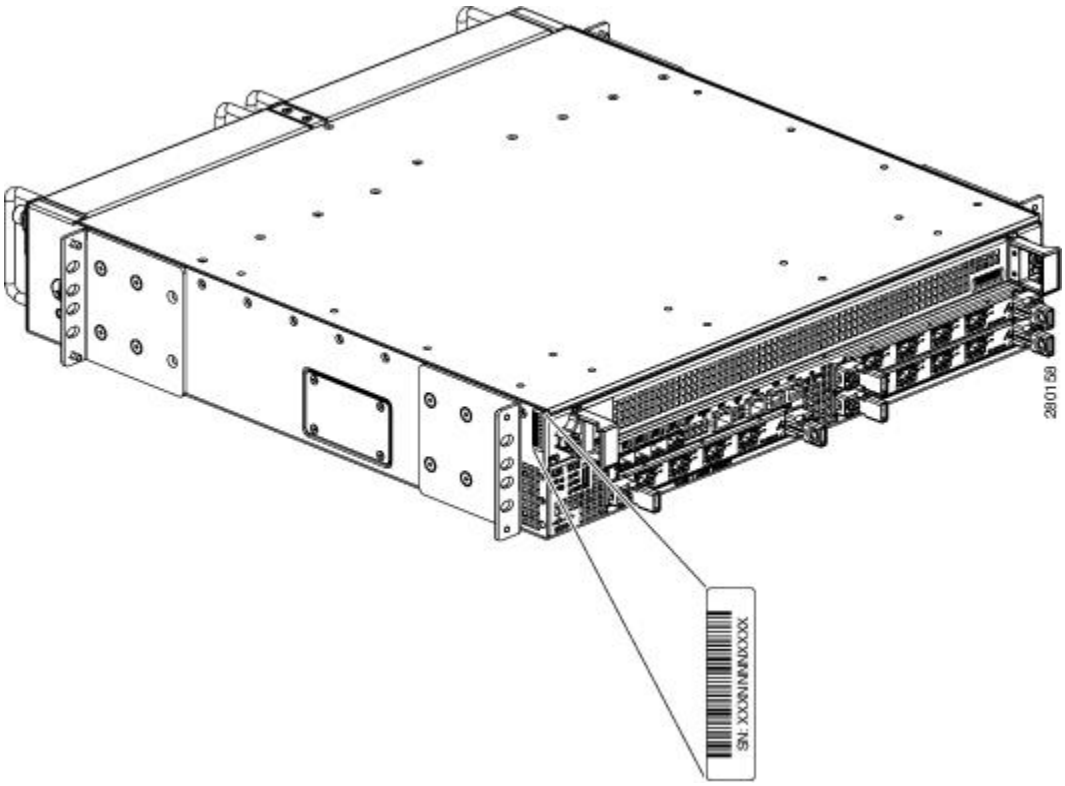

The following figure shows the serial number label location for the Cisco ASR 1002-F Router.

Figure 3: Cisco ASR 1002-F Router Serial Number Label Location

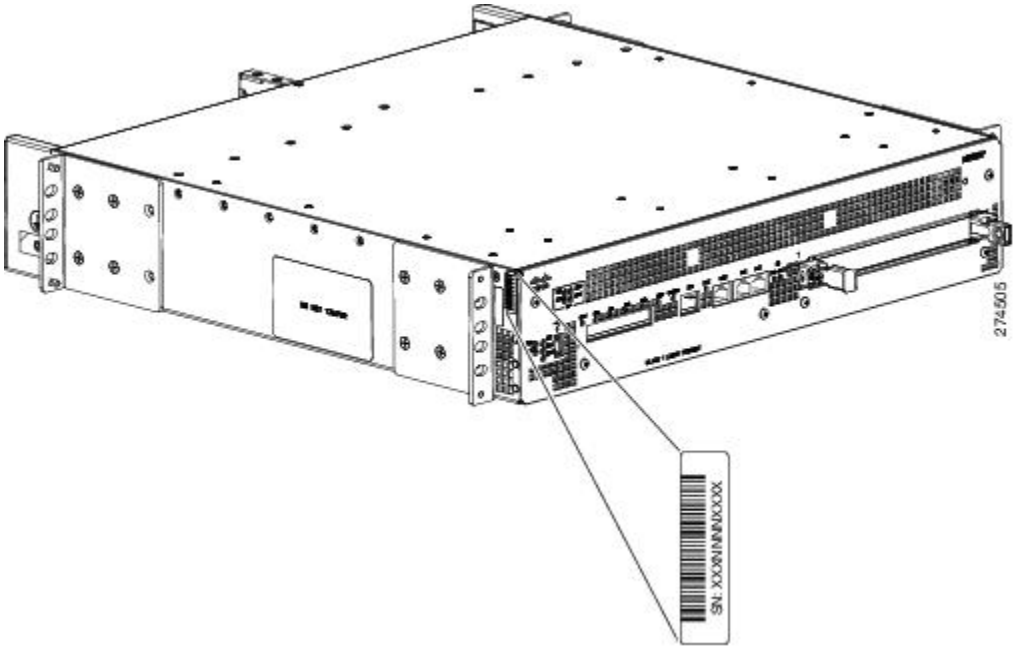

The following figure shows the serial number label location for the Cisco ASR 1013 Router (Note that this is the bottom of the chassis).

Figure 4: Cisco ASR 1013 Router Serial Number Label Location

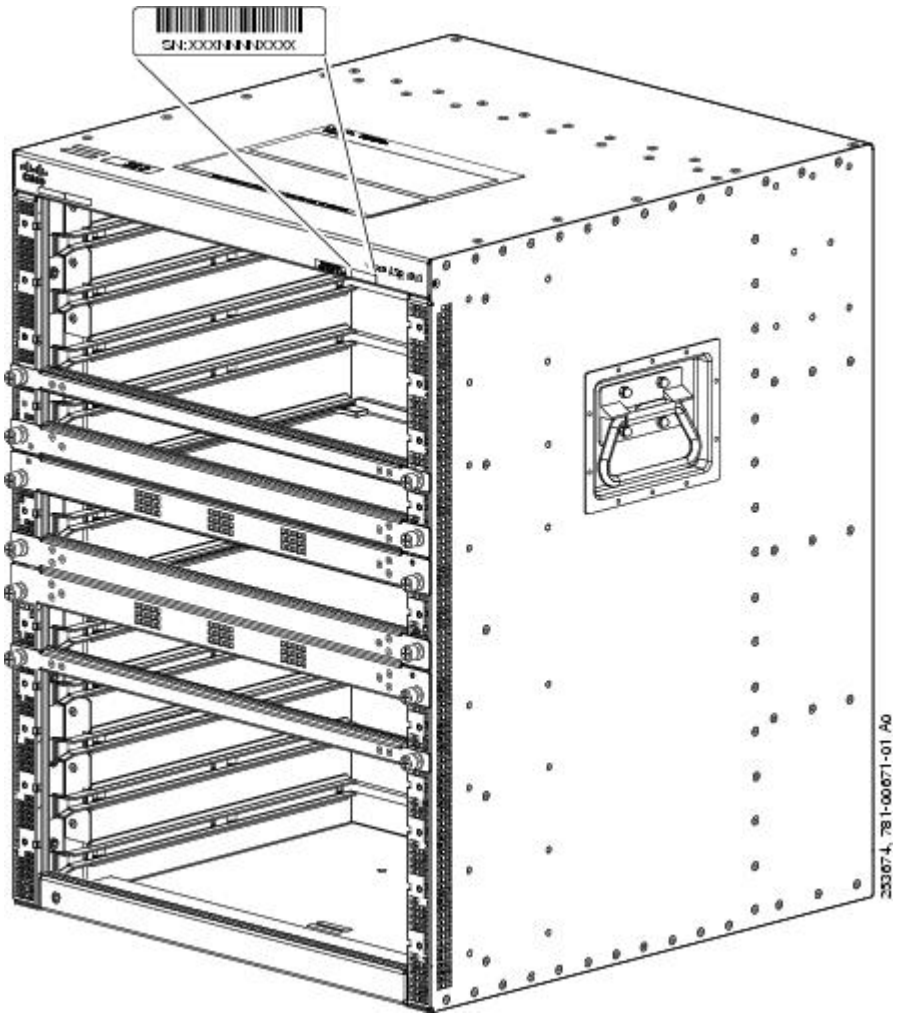

The following figure shows the serial number label location for the Cisco ASR 1001 Router.

Figure 5: Cisco ASR 1001 Router Serial Number Label Location

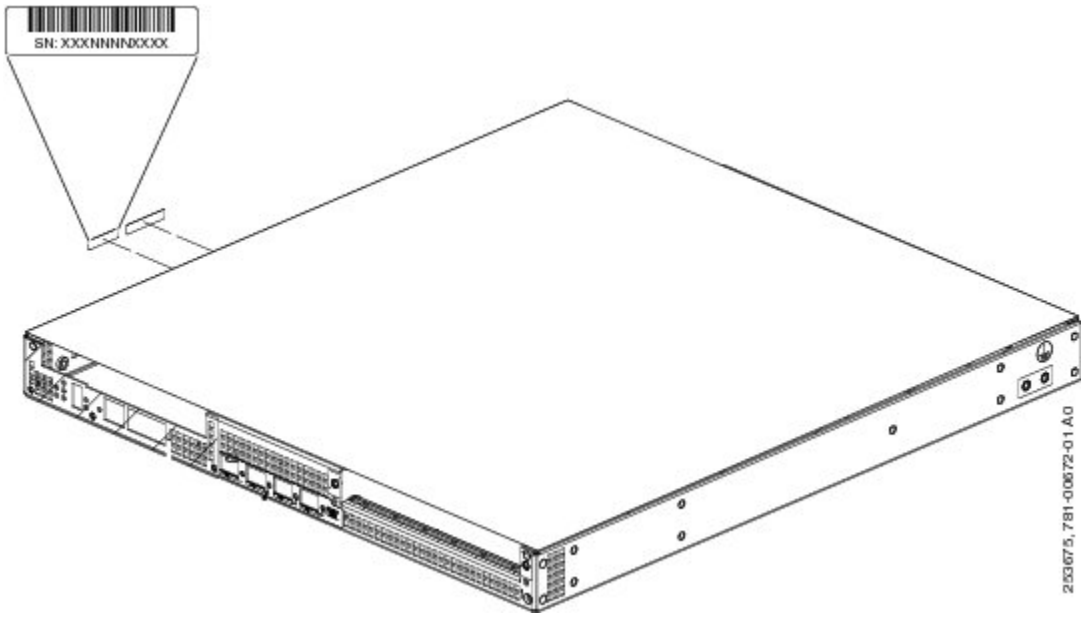

The following figure shows the serial number label location for the Cisco ASR 1002-X Router.

Figure 6: Cisco ASR 1002-X Router Serial Number Label Location

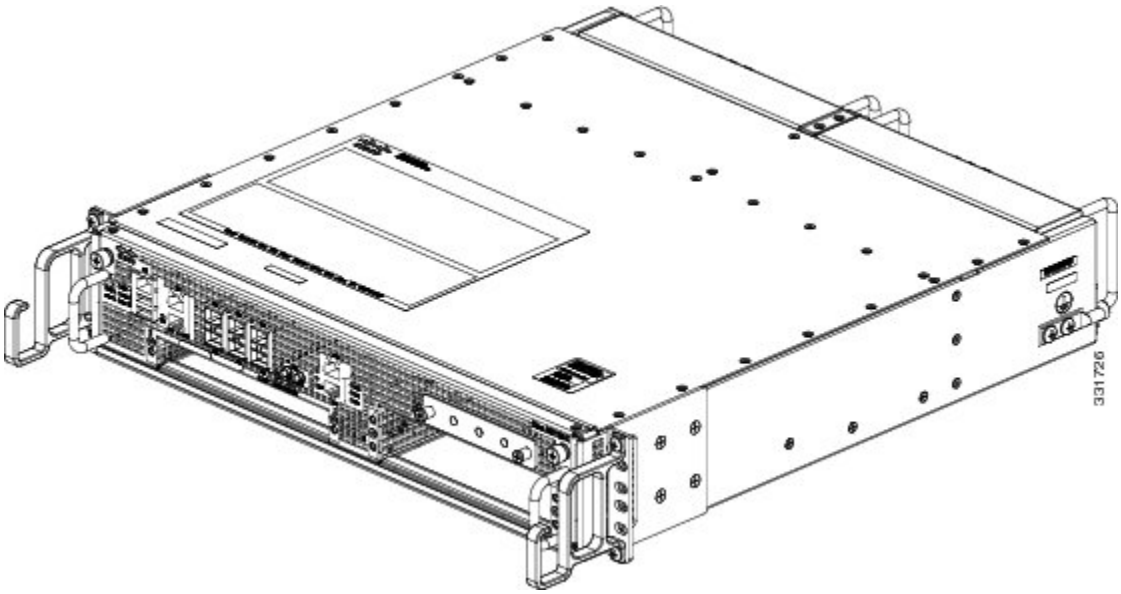

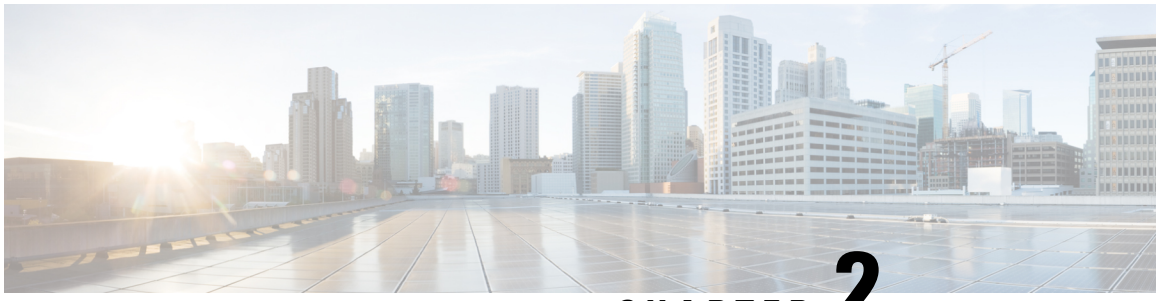

CHAPTER 2

Cisco ASR 1000 Series Routers Component Overview

This chapter contains the following sections:

Note For the Cisco Embedded Services Processor see, xref and for the SPA Interface Processor see, xref

- Cisco ASR 1000 Series Routers Component Software Support, on page 23
- Supported ASR 1000 Hardware Components, on page 25
- Cisco ASR 1000 Series Route Processor, on page 33
- Cisco ASR 1000 Series Router Power Supplies, on page 43
- Power Supplies for the Cisco ASR 1006 Router, on page 45
- Power Supplies for the Cisco ASR 1004 Router, on page 51
- Power Supplies for the Cisco ASR 1002 Router, on page 56
- Power Supplies for the Cisco ASR 1013 Router, on page 63
- Power Supplies for the Cisco ASR 1001 Router, on page 69

Cisco ASR 1000 Series Routers Component Software Support

This section lists the new hardware supported on the Cisco ASR 1000 Series routers and the version of Cisco IOS software code required to support the component. xref table lists the components that are not supported by earlier releases of Cisco IOS XE.

Upgrading to New Software

Note For a listing of the new SPAs, click the corresponding link in the table.

Table 5: Cisco ASR 1000 Series Router Component Software Support

Cisco IOS XE Software Support	Cisco Hardware Components
Cisco IOS XE Release 2.1.0	• Cisco ASR 1002 Router • Cisco ASR 1004 Router • Cisco ASR 1006 Router • Cisco ASR 1000 Embedded Services Processors • Cisco ASR 1000 Route Processor 1 • Cisco ASR 1000 SPA Interface Processor • Shared Port Adapters • 1 GB USB Flash Token for Cisco ASR 1000 Series
Cisco IOS XE Release 2.2.1	• Cisco ASR 1000 Embedded Services Processor 10G Non Crypto Capable (ASR1000-ESP10-N) • Cisco ASR1000-ESP20 embedded services processor
	• Shared Port Adapters
Cisco IOS XE Release 2.3.0	• Cisco ASR 1000 Series Route Processor 2 (Cisco ASR1000-RP2)
	• Shared Port Adapters
Cisco IOS XE Release 2.4.0	• Cisco ASR 1002-F Router
	• WebEx SPA
Cisco IOS XE Release 2.5.0	• 1-Port Clear Channel OC-12 ATM SPA (SPA-1XOC12-ATM-v2)
	• New XFP/SFPs Supported with SPAs and the Built-In Gigabit Ethernet Interface
Cisco IOS XE Release 2.6.0	1-Port Channelized OC-12/STM-4 SPA (SPA-1XCHOC12/DS0)
Cisco IOS XE 3.1S (formerly Release 2.7.0)	• Chapter 11, “Cisco ASR 1013 Router Overview and Installation”
	• Chapter 3, “Cisco ASR 1000 Series Routers Embedded Services Processors”
	• Chapter 4, “Cisco ASR 1000 Series Router SPA Interface Processors (SIPs)”

Cisco IOS XE Software Support	Cisco Hardware Components
Cisco IOS XE 3.2S (formerly Release 2.8.0)	• Chapter 12, "Cisco ASR 1001 Router Overview and Installation" • Cisco ASR1000-ESP40 and Cisco ASR1000-SIP40 support on Cisco ASR 1004 Router
Cisco IOS XE 3.7S	• Chapter 10, "Cisco ASR 1002-X Router Overview and Installation" • Cisco ASR1000-ESP100 support on Cisco ASR 1006 Router and Cisco ASR 1013 Router

Supported ASR 1000 Hardware Components

This section contains the following topics:

Supported Cisco ASR 1000 Platforms

The following table lists the Cisco ASR 1000 Series Routers and the hardware components supported in each router.

Table 6: Supported Cisco ASR 1000 Platforms and Components

Component	ASR 1001	ASR 1002-F	ASR 1002	ASR 1002-X	ASR 1004	ASR 1006	AS
Chassis	Scalable to 5 Gbps	Scalable to 2.5 Gbps	Scalable to 10 Gbps	Scalable to 36 Gbps	Scalable to 40 Gbps	Scalable to 100 Gbps	Sca Gb
	—	Supports software redundancy	Supports software redundancy	Supports software redundancy	Supports software redundancy	Supports hardware redundancy	Su har red
	One built-in 4x1 Gigabit Ethernet SPA	Four built-in Gigabit Ethernet ports	Four built-in Gigabit Ethernet ports	Six built-in Gigabit Ethernet ports	—	—	—

Component	ASR 1001	ASR 1002-F	ASR 1002	ASR 1002-X	ASR 1004	ASR 1006	ASR 10
ESP	Single integrated ASR1000-ESP2.5	Single integrated ASR1000-ESP2.5	Single ASR1000-ESP5	Single integrated embedded services processor	Single ASR1000-ESP10	Single or Dual ASR1000-ESP10	—
	—		Single ASR1000-ESP10	—	Single ASR1000-ESP20	Single or Dual ASR1000-ESP20	—
	—		—	—	ASR1000-ESP40	Single or Dual ASR1000-ESP40	Single ASR1
	—		—	—	—	Single or Dual ASR1000-ESP100	Single ASR1
	2.5 up to 5 Gbps		5 or 10 Gbps	5 Gbps, 10 Gbps, 20 Gbps, or 36 Gbps, depending on the Cisco software license installed	10 or 20 Gbps	10, 20, 40, or 100 Gbps	40 or
Route Processor	Single integrated route processor	Single integrated ASR1000-RP1	Single integrated ASR1000-RP1	Single integrated route processor	Single ASR1000-RP1	Single or Dual ASR1000-RP1	—
	—		—	—	Single ASR1000-RP2	Single or Dual ASR1000-RP2	Single ASR1
SIP	Integrated SIP	Integrated SIP	Integrated SIP	Integrated SIP	ASR1000-SIP10	ASR1000-SIP10	ASR1
	—			—	ASR1000-SIP40	ASR1000-SIP40	ASR1
SPA Slots	1 half-height (HH) SPA bay	1	3	3 HH SPA bays	8	12	24

Cisco ASR 1000 Series Hardware Configuration Combinations

This section provides Cisco ASR 1000 Series hardware configuration combinations and whether they are supported from Cisco IOS XE Release 3.1S onward. The tables list the router and the route processor, SIPs, and power modules supported on that router. The tables include the following categories

- Supported hardware before IOS XE Release 3.1S—xref table
- Supported hardware from IOS XE Release 3.1S—xref table
- Requires upgrade—xref table
- Not compatible—xref table
- Not supported in IOS XE Release 3.1S—xref table
- Incompatible HA—xref table

Note When an unsupported combination of hardware components occurs, the card or cards not supported are shutdown and an error message occurs. Following each table in this section, a description of the error message is provided.To prevent any errors from occurring, read the compatibility tables before you insert any Cisco ASR 1000 Series Router components on a router running Cisco IOS XE Release 3.1S or later releases.

Hardware Requiring a CPLD Upgrade

For details about Cisco ASR 1000 hardware configuration combinations that require a CPLD field programmable upgrade for components to be supported in IOS XE Release 3.1S, see Upgrading Field Programmable Hardware Devices for Cisco ASR 1000 Series Routers .

Incompatible Hardware Configuration Combinations

The following table lists ASR 1000 hardware configuration combinations that are not compatible from Cisco IOS XE Release 3.1S onward.

Table 7: Incompatible Cisco Hardware Configuration Combinations from IOS XE Release 3.1S Onward

Chassis	ASR1000-RP	ASR1000-ESP	ASR1000-SIP	Result
Cisco ASR 1002 Router	NA (built in)	ESP-20 ESP-40 ESP-100	NA (built in)	ESP-20 disabled ESP-40 disabled ESP-100 disabled
Cisco ASR 1004 Router	—	ESP-5 ESP-100	—	ESP-5 disabled ESP-100 disabled
Cisco ASR 1006 Router	—	ESP-5	—	ESP-5 disabled
Cisco ASR 1013 Router	RP1	—	—	RP1 disabled
Cisco ASR 1001 Router	NA (built in)	Integrated embedded services processor	NA (built in)	—
Cisco ASR 1002-X Router	NA (built in)	Integrated embedded services processor	NA (built in)	—

Incompatible ASR1000-ESP Error Message

This section describes what happens when an incompatible Cisco ASR1000-ESP is inserted into the following Cisco ASR 1000 series router:

- Cisco ASR1000-ESP20 is inserted into Cisco ASR 1002 Router
- Cisco ASR1000-ESP40 is inserted into Cisco ASR 1002 Router
- Cisco ASR1000-ESP100 is inserted into Cisco ASR 1002 Router
- Cisco ASR1000-ESP5 or Cisco ASR1000-ESP100 is inserted into Cisco ASR 1004 Router or ASR 1006 Router

Error message

The Cisco ASR1000-ESP card is disabled, and the following error message is displayed on the console:

```
Error message: %CMRP-3-INCOMPATIBLE_FRU: [chars] in slot [chars] is not compatible with
[chars] and so it is disabled.
fp_name: ESP-5/ESP-20/ESP-40/ESP-100
fp_slot: F0/F1
hw_config: ASR-1002/ASR-1004/ASR-1006 chassis
```

Reason

The Product ID read from the FRU IDPROM is not compatible with this hardware configuration.

Recommended action

Remove the embedded services processor from the chassis.

Incompatible ASR1000-RP Error Message

This section describes what happens when a Cisco ASR1000-RP1 is inserted into the Cisco ASR 1013 router and provides the error message and explanation as to why this occurred:

Error message

The ASR1000-RP1 is disabled and the following error message displays at the console.

```
Error message: %CMRP-3-INCOMPATIBLE_FRU: [chars] in slot [chars] is not compatible with
[chars] and so it is disabled”
rp_name: RP1
rp_slot: R0/R1
hw_config: ASR-1013 chassis
```

Reason

The Product ID read from the FRU IDPROM is not supported in this hardware configuration.

Recommended action

Remove the Cisco ASR1000-RP1 from the chassis.

Unsupported Hardware Configurations

The following table lists Cisco ASR 1000 Series Routers hardware configurations that are not supported.

Table 8: Cisco ASR 1000 Series Routers Hardware Configurations That Are Not Supported

Router	ASR1000-RP	ASR1000-ESP	ASR1000-SIP	Result
Cisco ASR 1004 Router	—	ESP-40 ESP-100	—	ESP-100 disabled
Cisco ASR 1006 Router	RP1	ESP-40	—	ESP-40 disabled
Cisco ASR 1001 Router	—	Integrated embedded services processor	—	—
	—	—	—	SIP-40 disabled

The following may be the outcome when using unsupported Cisco ASR 1000 components in a high-availability feature configuration:

- Unsupported ASR1000-RP in a redundant Cisco ASR 1006 configuration—If you insert an Cisco ASR1000-RP1 or RP2 in an ASR 1006 redundant setup, the following occurs:

The standby ASR1000-RP card is disabled and this error message prints on the active RP console:

```
Error message: %CMRP-3-RP_MISMATCH: [chars] has been held in reset because the part number
 differs from that of the active RP.
rp_fru: R0/R1
```

Reason: The part number read from the FRU IDPROM is not compatible with part number of the active ASR1000-RP; as a result it may not act as a standby.

Recommended action: Remove the FRU from the chassis

- Unsupported Cisco ASR 1000 series router power supply—If you insert the Cisco ASR 1013 router power supply into the Cisco ASR 1006 Router or insert the Cisco ASR 1006 Router power supply into the Cisco ASR 1013 Router, the following occurs:

The following error message displays when detected and then periodically after that (every 1 hour) until the problem is corrected.

```
Error message: %CMRP-3-UNSUPPORTED_PEM: [chars] in slot [chars] is not supported with [chars]
 and it needs to be replaced immediately
pem_name: ASR1006-PWR-AC/ASR1006-PWR-DC/ASR1013-PWR-AC/ASR1013-PWR-DC
pem_slot_num: P0-P3
hw_config: ASR-1006/ASR-1013 chassis
```

Reason: The Product ID read from the PEM IDPROM is not supported in this hardware configuration. It will be allowed to continue but immediate replacement is required.

Recommended action: Remove the PEM from the chassis and replace it with a supported PEM.

If the above combinations occur, you will see the following error messages.

Unsupported ASR1000-ESP Error Message

This section describes what happens when a Cisco ASR1000-ESP40 is present when the router is booting or inserted at a later time into the Cisco ASR 1000 Router and provides the error message and explanation as to why this occurred.

Error message

The ASR1000-ESP40 card is disabled and the following error message displays at the console.

```
Error message
%CMRP-3-UNSUPPORTED_FRU: [chars] in slot [chars] is not supported with [chars] and so it
is disabled
fru_name: ESP40
fru_slot: F0
hw_config: ASR-1004 chassis
```

Reason

The Product ID read from the FRU IDPROM is not supported in this hardware configuration.

Recommended action

Remove the Cisco ASR1000-ESP40 from the chassis.

Unsupported ASR1000-SIP Error Message

This section describes what happens when a Cisco ASR1000-SIP40 is present when the router is booting or inserted at a later time into the Cisco ASR 1000 Router and provides the error message and explanation as to why this occurred.

Error message

The ASR1000-SIP40 card is disabled and the following error message displays at the console.

```
Error message: %CMRP-3-UNSUPPORTED_FRU: [chars] in slot [chars] is not supported with [chars]
 and so it is disabled
fru_name: SIP40
fru_slot: 0-1
hw_config: ASR-1004 chassis
```

Reason

The Product ID read from the FRU IDPROM is not supported in this hardware configuration.

Recommended action

Remove the Cisco ASR1000-SIP40 from the chassis.

Incompatible Cisco High Availability Hardware Configurations

The Cisco ASR 1006 Router hardware configuration for the High Availability feature is incompatible in Cisco IOS XE Release 3.1S when you have the following hardware configuration combinations:

- Cisco ASR100-RP1 with a Cisco ASR1000-ESP10 and a Cisco ASR1000-SIP10
- Cisco ASR100-RP2 with a Cisco ASR1000-ESP20

Upgrading Existing Hardware Components to Support the Cisco ASR 1013 Router

Beginning with Cisco IOS XE Release 3.10S, Cisco ASR 1000 Series Routers have the capability to allow users to perform upgrades in the field on programmable hardware devices. Field programmable hardware devices include the Complex Programmable Logic Device (CPLD) and the field programmable gate array (FPGA).

Previously released Cisco ASR1000-RP2 and Cisco ASR1000-SIP10 modules are not compatible when inserted in the Cisco ASR 1013 Router. If an incompatible component is inserted into the Cisco ASR 1013 Router, Cisco software detects the out-of-revision hardware. In order to reuse the Cisco ASR1000-RP2 and Cisco ASR1000-SIP10 in the Cisco ASR 1013 Router, you must perform a CPLD field programmable hardware upgrade on these modules.

For procedures on performing a Complex Programmable Logic Device (CPLD) field programmable upgrade, see Upgrading Field Programmable Hardware Devices for Cisco ASR 1000 Series Routers .

This sections describes:

Unsupported Active ASR1000-RP2 Requires Upgrade

This section describes what happens when an active Cisco ASR1000-RP2 with an older version of CPLD is inserted into the Cisco ASR 1013 Router. This section describes the error message, reason, and under what types of configuration an upgrade of CPLD firmware is required.

Error message

```
CMRP-3-RP_CPLD_INCOMPATIBLE: All other cards in the system has been held in reset as the
Active RP [chars] in slot [chars] has CPLD firmware version that is incompatible with
[chars]"
fru_model_string: ASR1000-RP2
fru_string: R0/R1
hw_config_string: ASR1013
```

Reason

Active RP requires newer CPLD firmware to function properly in this chassis.

Recommended action

Upgrade the CPLD firmware on this FRU using the upgrade hw-programmable CPLD file <pkg_file> slot <fru_slot> command. See http://www.cisco.com/en/US/docs/routers/asr1000/cpld/hw_fp_upgrade.html for more details.

Configurations—When an Upgrade of CPLD Firmware Is Required

In order to use existing ASR1000-RP2 and ASR1000-SIP10 hardware components in the Cisco ASR 1013 Router, you must perform a CPLD upgrade on the RP2 and SIP10 components (with older CPLD) if the following configurations occur:

- System powering up with both RPs with older CPLD—The system comes up in redundant mode and the message stating that the CPLD needs upgrade (for both RPs) displays on the console with a clear warning that the system may not work properly unless it is upgraded, and a summary of the instructions to upgrade. A message for standby RP will appear in the standby console and the active RP.

- System powering up with one RP with older CPLD—The message will be printed for the RP with older CPLD.
- System powering up with RP running latest CPLD and RP with older CPLD inserted—The message will be printed for the newly inserted RP.
- System powering up with RP running older CPLD and RP with latest CPLD inserted—The message will be printed when the system powered up before this event. When the second RP is inserted no special action is taken.
- System up with RP running older CPLD and RP with older CPLD inserted—The message will be printed when the system powered up before this event. When the second RP is inserted, similar message for the new card will be printed.

When To Perform a CPLD Upgrade

In order to use existing ASR1000-RP2 and ASR1000-SIP10 hardware components in the Cisco ASR 1013 Router, you must perform a CPLD upgrade on the RP2 and SIP10 components (with older CPLD) if the following configurations occur:

- System powering up with both RPs with older CPLD—The system comes up in redundant mode and the message stating that the CPLD needs upgrade (for both RPs) displays on the console with a clear warning that the system may not work properly unless it is upgraded, and a summary of the instructions to upgrade. A message for standby RP will appear in the standby console and the active RP.
- System powering up with one RP with older CPLD—The message will be printed for the RP with older CPLD.
- System powering up with RP running latest CPLD and RP with older CPLD inserted—The message will be printed for the newly inserted RP.
- System powering up with RP running older CPLD and RP with latest CPLD inserted—The message will be printed when the system powered up before this event. When the second RP is inserted no special action is taken.
- System up with RP running older CPLD and RP with older CPLD inserted—The message will be printed when the system powered up before this event. When the second RP is inserted, similar message for the new card will be printed.

Unsupported Standby ASR1000-RP2 or ASR1000-SIP10 Requires Upgrade

This section describes what happens when a standby Cisco ASR1000-RP2 or Cisco ASR1000-SIP10 with an older version of CPLD is inserted into the Cisco ASR 1013 Router. The error message that is displayed on the console and the message explanation and recommended action are described.

Error message

```
CMRP-2-FRU_CPLD_INCOMPATIBLE: [chars] in slot [chars] has been held in reset as its CPLD
firmware version is incompatible with [chars]
fru_model_string: ASR1000-RP2/ASR1000-SIP10
fru_string: [0-5]/R0/R1
hw_config_string: ASR1013
```

Reason

This FRU requires a newer CPLD firmware to function properly in this chassis.

Recommended action

Upgrade the CPLD firmware on this FRU using the upgrade hw-programmable CPLD file <pkg_file> slot <fru_slot> command. For more details, see Upgrading Field Programmable Hardware Devices for Cisco ASR 1000 Series Routers .

Image to Upgrade Field-Programmable Hardware Devices

Starting in Cisco IOS XE Release 3.1S, an independent image used to upgrade field programmable hardware devices is released periodically, separate from the consolidated packages. An image is provided for the field programmable device to customers in cases where a field upgrade is required. If the Cisco ASR 1000 Series Router contains an earlier released version of the hardware programmable firmware on the Cisco ASR1000-RP, Cisco ASR1000-SIP, or Cisco ASR 1000-ESP, then that hardware programmable firmware may need to be upgraded.

Generally an upgrade is only necessary in cases where a system message indicates one of the field programmable devices on the Cisco ASR 1000 Series Routers needs an upgrade or a Cisco technical support representative suggests an upgrade.

For example, in Cisco IOS XE Release 3.1S, a hardware (hw)-programmable upgrade package file image that contains a new version of the Complex Programmable Logic Device (CPLD) code is available for users who need to update prior released Cisco ASR1000-RP2 and Cisco ASR1000-SIP10 modules in the Cisco ASR 1013 Router.

For information on performing a field programmable hardware device upgrade in the field, see Upgrading Field Programmable Hardware Devices for Cisco ASR 1000 Series Routers .

Cisco ASR 1000 Series Route Processor

The Cisco ASR 1000 Series route processor is the central network clocking card and runs the network operating system, BINOS kernel plus IOSD (IOS daemon). The Cisco ASR1000-RP1 and Cisco ASR1000-RP2 are responsible for:

- Selection of the active Cisco ASR 1000 Series Route Processor and the Cisco ASR 1000 Series Embedded Services Processor and notification of the Cisco ASR 1000 Series SPA Interface Processor of these events.
- All the control processors communicating and performing packet processing on packets punted to it by the Cisco ASR 1000 Series Embedded Services Processors.

The Cisco ASR 1000-RP1 and Cisco ASR1000-RP2 have LED status indicators, an RJ-45 plug for DTI and BITS timing reference, and two USB ports which can be used with smart cards for secure key distribution.

Specific system tasks performed by the Cisco ASR 1000 Series Route Processors include the following:

- Runs the router control plane, including network control packets, and connection setup
- Supports single-bit error correction and multi-bit error detection
- User interfaces: 10/100/1000 Mbps Management Ethernet, CON/AUX, USB
- Active and standby ASR1000-RP1, ASR1000-RP2, and Cisco ASR 1000 Series Embedded Services Processor master and standby synchronization (Tasks include switchover from failing master to standby.)
- Code storage, management, and upgrade.
- Supports on-board failure logging (OBFL) with 2 MB of memory.

- Downloading operational code for SIPs and Cisco ASR 1000 Series Embedded Services Processor over Ethernet out of band channel (EOBC), which is used for communication between the control processors on the Cisco ASR 1000 Series Routers
- Command line interface (CLI), alarm, network management, logging, and statistics aggregation
- Chassis management
- Ethernet out-of-band management
- Punt path processing for packets not supported by the embedded services processors
- Provide a configuration repository along with a hard disk drive (optionally a solid-state drive) for logging system statistics, records, events, errors, and dumps (for both the Cisco ASR 1006 Router, Cisco ASR 1004 Router and Cisco ASR 1013 Router).
- Provide the management interfaces of the platform including Dual Asynchronous Receiver/Transmitter (DUART) that is used for the CON and AUX serial ports. The MGMT Ethernet (ENET) management ports, CLI, status indicators, BITS interface, reset switch, Audible Cutoff (ACO) button, and USB ports for secure keys.
- Provide chassis management (environmental)
- Are field-replaceable units (FRU) with online insertion and removal (OIR) (except for Cisco ASR 1002 router).
- Provide non-volatile storage for the system used as the image and configuration repository along with the logger for system statistics, records, events, errors, and dumps.
- Are responsible for the chassis management including activation and initialization of the other cards, selection or switchover of active versus standby cards, image management and distribution, logging facilities, distribution of user configuration information, and alarm control.
- Provide control signals and Ethernet out of band channel (EOBC) for the two Cisco ASR 1000 Series Embedded Services Processors and Cisco ASR 1000 Series Route Processors.
- Include control signals for monitoring the health of power entry modules, shutting down the power and driving alarm relays located on the power entry modules.
- The Cisco ASR 1000 Series route processor modules can be configured with either a 40 GB or a 32 GB disk.

Cisco ASR 1000 Series Route Processor Differences

The Cisco ASR 1000 route processors receive and transmit all network packets through the active embedded services processors. The following table describes the differences between the Cisco ASR1000-RP1 and Cisco ASR1000-RP2.

Table 9: Differences in the Cisco ASR 1000 Series Route Processors

Feature	Cisco ASR1000-RP1	Cisco ASR1000-RP2
CPU	Single 1.5 GHz PowerPC	Dual 2.66 GHz Intel x86
DRAM Memory	Supports 4 GB default	Supports up to 8 GB of field-replaceable memory
Bulk Storage hard Disk	Internal 40 GB hard-disk	Front-mounted 80 GB hard-disk (field replaceable)
Bootflash/NVRAM	512 MB eUSB	2 GB eUSB

Feature	Cisco ASR1000-RP1	Cisco ASR1000-RP2
On the Cisco ASR 1002-F router, scaling is constrained by throughput of 2.5G.Unless otherwise noted, features for the Cisco ASR 1002-F Router are the same as the Cisco ASR 1002 Router.		

The Cisco ASR 1000 Series route processor modules consist of a front panel label for indicator and control functions and a separate label for the I/O connectors. The Cisco ASR1000-RP1 and Cisco ASR1000-RP2 model number labeling is located next to the left card module handle. The modules also contain card handles to assist in insertion or removal of the module.

Note The Cisco ASR1000-RP1 and Cisco ASR1000-RP2 cannot exist in the same chassis.

The Cisco ASR1000-RP1 and Cisco ASR1000-RP2, Cisco ASR1000-ESPs, and power supplies can support redundancy. Only one RP and one ESP are considered active at a time and no load sharing is performed. However, the non-active RP or ESP is maintained in a warm standby state so that it can take over the active role as quickly as possible if necessary. The following combinations of components are supported:

- Single RP—single ESP
- Single RP—dual ESP
- Dual RP—dual ESP
- Dual RP—single ESP

In a fully redundant chassis, each RP is separately connected to each FP and I/O card slot over separate point-to-point connections of the system interconnect over the midplane. The selection of the active RP is made separately from the selection of the active ESP.

The following figure shows the Cisco ASR 1000 Series Route Processor faceplate.

Figure 7: Cisco ASR1000-RP Route Processor Faceplate LEDs and Connectors

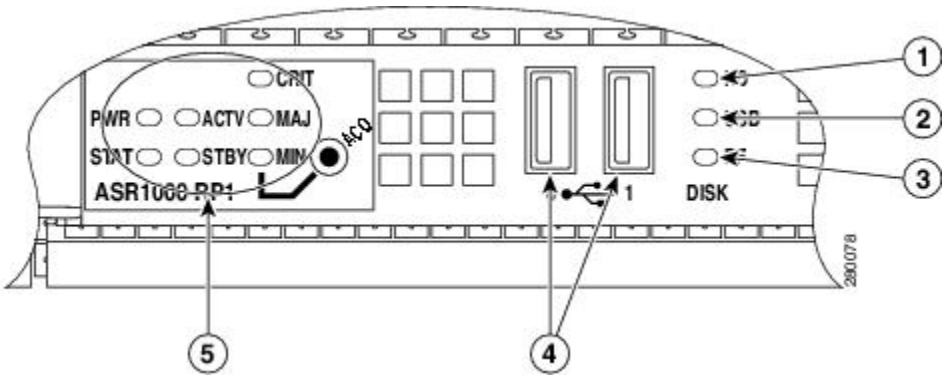

1	Internal hard drive LED	4	USB 0, USB 1 connector
2	External USB Flash LED	5	ASR1000-RP1 or ASR1000-RP2 LEDs
3	Internal USB bootflash LED	—	—

The following figure shows the Cisco route processor with faceplate connectors.

Figure 8: Cisco ASR1000-RP Route Processor Connectors

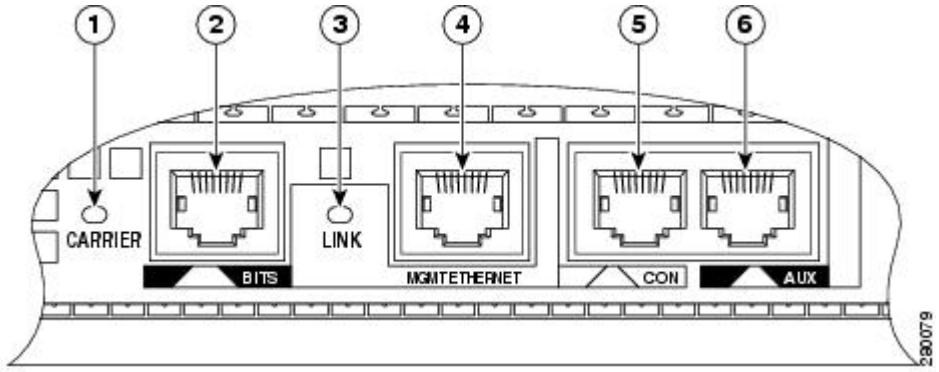

1	CARRIER LED	4	MGMT Ethernet connector
2	BITS connector	5	CON connector
3	LINK LED	6	AUX connector

The following table lists the Cisco ASR 1000 Series Route Processor LEDs and behavior.

Table 10: Cisco ASR 1000 Series Route Processor LEDs

LED Label	LED	Color —State	Behavior Description
PWR	Power	Solid green	All power requirements are within specification
	—	Off	Off, the router is in standby mode.
STAT	System status	Solid green	Cisco IOS software has booted.
	—	Yellow	ROMMON has successfully loaded.
	—	Red	System failure or during boot process.
ACTV	Active	Green	Lit when the Cisco ASR 1000 Series RP is active.
STBY	Standby	Yellow	Lit when the Cisco ASR 1000 Series RP is the standby processor.
CRIT	Critical	Solid Red	Critical alarm indicator or during boot process. An example: the ambient air temperature is above 60ºC and will begin shutdown in 5 minutes.
MAJ	Major	Solid Red	Major alarm indicator. For example: Ambient air temperature is beyond short term operating range of 55ºC. System will shut down above 60ºC.

LED Label	LED	Color —State	Behavior Description
MIN	Minor	Amber	Minor alarm indicator. Ambient air temperature is beyond normal operating range of 40ºC. For example: if the RP software determines that an unknown card has been installed or if the card has failed, the card can power it off or set a minor alarm.
DISK HD	Internal hard drive LED	Flashing Green	Activity indicator.
		Off	No activity.
DISK USB	External USB Flash LED	Flashing Green	Activity indicator.
		Off	No activity.
DISK BF	Internal USB bootflash LED	Flashing Green	Activity indicator.
		Off	No activity.
BITS I/F Mode CARRIER	LED	Off	Out of service or not configured.
		Solid Green	In frame and working properly.
		Amber	Fault or loop condition exists.
DTI ModeCARRIER for Cisco ASR1000-RP2	LED	Off	Warmup, Free-run, or Holdover.
		Solid Green	Normal or bridging.
		Amber	Fast.
LINK	10/100/1000 RJ-45 Interface LED	Solid Green	Link with no activity.
		Flashing Green	Link with Activity.
		Off	No link.

The following table lists the Cisco ASR 1000 Series Route Processors connectors and description.

Table 11: Cisco ASR 1000 Series Route Processor Connectors

Label	Type	Description
ACO	Audible Cutoff button	A recessed button to cut off the audible alarm. This is triggered when the critical, major, or minor LED is set.
0	USB0 interface	Side-by-side USB connector used with memory sticks or smart cards for secure key distribution
1	USB1 interface	Side-by-side USB connector used with memory sticks or smart cards for secure key distribution
BITS	RJ-45 connector	Indicates BITS timing reference.

Label	Type	Description
MGMT ETHERNET	One RJ-45 jack for copper Ethernet Management Port	The route processor has an ENET port with a RJ-45 connector to attach a management device or network for network management.
CON	One RJ-45 for CON/AUX	Console port used to connect to a terminal.
AUX	One RJ-45 for CON/AUX	Auxiliary port used for remote management purposes.

Note Out of Band (OOB) or modem connection in the AUX and/or CON ports, regardless of being properly configured, the connection is not established and a call cannot be setup. This functionality is not supported on any of the Cisco ASR 1000 Series Aggregation Services Routers or on any of the Cisco IOS XE versions.

The Cisco ASR 1000 Series Route Processor meets the following requirements:

- Supports up to 4 GB of memory with single-bit error correction and multi-bit error detection (except for the Cisco ASR 1002 embedded route processor)
- Supports On-board Failure Logging (OBFL) with 2MB of memory
- Supports the Cisco ASR 1000 Series Router system architecture and midplane
- Enhanced Serdes Interconnect (ESI) at 11.5 Gbps.
- Gigibit Ethernet switches for EOBC communication and boot-up of the Cisco ASR 1000 Series SPA Interface (SIP) and Cisco ASR 1000 Series Embedded Services Processor.
- Runs Cisco IOS network control plane (routing protocol, connections setup)
- Cisco IOS punt packet forwarding
- Active/Standby Cisco ASR 1000 Series Route Processor 1 and Cisco ASR 1000 Series Embedded Services Processor selection
- Code storage and download operational code to Cisco ASR 1000 Series Embedded Services Processor and Cisco ASR 1000 Series SPA Interface (SIP)
- Bulk storage: by default, it comes with a 40 GB hard disk drive (HDD).

Note The HDD on ASR1000 products may have capacity in excess of that defined in the datasheet. However, during manufacturing, steps may be taken to reduce the capacity visible to the IOS, so that the visible size matches to the size specified in the datasheet.

- 2 MB upgradeable BootROM, 1 GB Embedded USB memory (eUSB)
- Comes with 2 GB of DRAM as default and can be upgradeable to 4 GB DRAM (except for the Cisco ASR 1002 embedded route processor).
- Front panel support: Console, 10/100 Management port, two USB ports, CON port, and AUX port.The Cisco ASR 1000 Series Routers have one Gigabit Ethernet Management Ethernet interface on each Route Processor. The purpose of this interface is to allow users to perform management tasks on the router; it is basically an interface that should not and often cannot forward network traffic but can otherwise access the router, often via Telnet and SSH, and perform most management tasks on the router. The interface is most useful before a router has begun routing, or in troubleshooting scenarios when the SPA interfaces are inactive. The following aspects of the Management Ethernet interface should be noted:

- Each RP has a Management Ethernet interface, but only the active RP has an accessible Management Ethernet interface (the standby RP can be accessed using the console port, however).
- IPv4, IPv6, and ARP are the only routed protocols supported for the interface.
- The interface provides a method of access to the router even if the SPA interfaces or the IOS processes are down.

- A console port can run up to 115.2 kbps with hardware flow control. One port is used as the CONSOLE port for secure configuration and status display. The default BAUD rate for the CONSOLE port should be set at 9600 BAUD. Both the console and auxiliary ports are asynchronous serial ports.

Cisco Integrated ASR1000-RP1 for Cisco ASR 1002 Router

The route processor for the Cisco ASR 1002 Router is integrated in the chassis and supports all the typical customer management interfaces such as the Ethernet network management port and console and auxiliary serial ports of the route processor for the Cisco ASR 1006 and ASR 1004 routers. It also has LED status indicators, an RJ-45 plug for a BITS timing reference and one USB ports which can be used with smart cards for secure key distribution or for image or configuration file updates.

The following figure shows the Cisco ASR1000-RP1 LEDs for the Cisco ASR 1002 Router.

Figure 9: Embedded Cisco ASR1000-RP1 LEDs

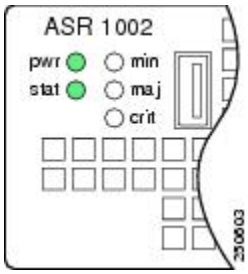

The embedded route processors for the Cisco ASR 1002 Router provides connection for one SPA bay and the circuitry for the a built-in 4xGE SPA.

The Cisco route processor for ASR 1002 Router meets the requirements of route processors for the Cisco ASR 1006 and the Cisco ASR 1004 routers; except for the following deviations:

- No SATA hard drive supported. Bulk file storage is on a large fixed eUSB device (up to 8 GB (bytes) supported).
- No support for redundant route processors.
- Hardware memory and storage options (such as DRAM) are not field upgradeable.
- Network clock changes. No second BITS clock input supported.
- The LED order is from top to bottom on the route processor is MIN, MAJ, CRIT.
- The Cisco ASR1000-RP2 is not supported on the Cisco ASR 1002 router or Cisco ASR 1002-F router

The following table lists the Cisco embedded ASR1000-RP1 LEDs and behaviors.

Table 12: Cisco Embedded ASR1000-RP1 LEDs in the Cisco ASR 1002 Router

LED Label	LED	Color —State	Behavior Description
PWR	Power	Solid green	All power requirements are within specification

LED Label	LED	Color —State	Behavior Description
		Off	Off, the router is in standby mode.
STAT	System status	Solid green	Cisco IOS has successfully booted.
		Yellow	ROMMON is running or when the Process Manager declares that a critical ASR 1000 Series RP1 process is not running
		Red	System failure or powering up.
MIN	Minor	Amber	Minor alarm indicator.
MAJ	Major	Red	Major alarm indicator.
CRIT	Critical	Red	Critical alarm indicator.
BOOT	eUSB0 FLASH(BootDisk	Flashing Green	Activity indicator.
		Off	No activity.
CARRIER		Off	Out of service or not configured.
		Green	In frame and working properly.
		Amber	Fault or loop condition.
LINK	10/100 /1000 RJ-45 Interface LED	Green	Link with no activity.
		Flashing Green	Link with activity.
		Off	No link.
4 LEDs	Built-in SPA SFP port status	Off	Port is not enabled.
		Amber	Port enabled but there is a problem with the Ethernet link.
		Green	Port enabled, valid Ethernet link
PWR	Carrier card power	Green	All carrier card requirements are within specification.
STAT	Carrier card status	Green	Only when the SPA drivers have started and are running and all critical processes are running
		Yellow	When ROMMON is running and during the download and boot of the operating system
		Red	A fault is detected or the card is powering up.

LED Label	LED	Color —State	Behavior Description
The built-in Gigabit Ethernet ports on the Cisco ASR 1002 Router support the same small form-factor pluggable (SFP) optical transceivers as the 5x1 GE SPA. Note that the Cisco ASR 1002 built-in GE ports support only the SFP-GE-T but not the SFP-GLC-T.			

The following table lists the Cisco embedded ASR1000-RP1in the Cisco ASR 1002 Router connectors and description.

Table 13: Cisco Embedded ASR1000-RP1 Connectors

Label	Type	Description
BITS	Standard E1/T1 RJ-45 connector	Indicates BITS timing references.
MGMT	One RJ-45 jack for copper Ethernet Management Ethernet Port	The route processor has an ENET port with a RJ-45 connector to attach a management device or network for network management.
CON	One RJ-45 for CON	Console port used to connect to a terminal.
AUX	One RJ-45 for AUX	Auxiliary port used for remote management purposes.

xref fig shows a fully loaded Cisco ASR 1002 Router.

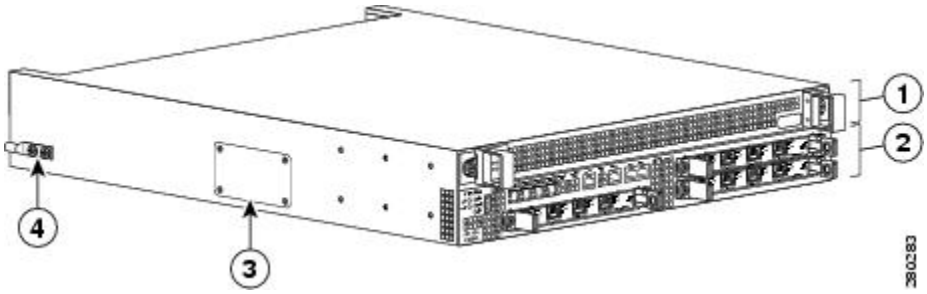

1	F0 slot	3	The eUSB panel door on the side of the Cisco ASR 1002 Router must not be opened. There is a Do Not Tamper label on the panel door. Do not remove the label. If there is a problem with eUSB flash card, the chassis should be returned.
2	R0 slot	4	Grounding stud location

Note Unless otherwise noted, features for the Cisco ASR 1002-F Router are the same as the Cisco ASR 1002 Router. The Cisco ASR1002-ESP-F supports 2.5 Gbps, and it is integrated in the chassis. It is not a field-replaceable unit.

How Cisco ASR1000-RP Alarm Monitoring Works

The Cisco ASR1000-RP1 or Cisco ASR1000-RP2 faceplate displays the CRIT, MAJ, and MIN alarm indicator LEDs. An external element can be connected to a power supply using the DB-25 alarm connector on the power supply. The external element is a DC light bulb for a visual alarm and a bell for an audible alarm.

If an alarm illuminates the CRIT, MIN, or MAJ LED on the Cisco ASR 1000 Series Route Processor (RP) faceplate, and a visual or audible alarm is wired, the alarm also activates an alarm relay in the power supply DB-25 connector (on the Cisco ASR 1006 Router and Cisco ASR 1004 Router). The bell rings or the light bulb flashes and alerts site personnel that a router alarm condition exists.

Note Shielded cables must be used to connect to the DB-25 alarm connector on both the AC and DC power supplies, in order to comply with the FCC/EN55022/CISPR22 Class A emissions requirements.

The alarm signals sent to this DB-25 connector are identical in function to those sent to the system LEDs on the Cisco ASR1000-RP1 and Cisco ASR1000-RP2. Each alarm consists of three contact pins that are switched when an alarm becomes active which causes a corresponding contact closure between the DB-25 connector pins. As a result a critical, major, or minor alarm condition detected in the router can trigger a simultaneous fault indication in some of the following ways:

- System alarm LEDs—The three system alarm LEDs on the Cisco ASR1000-RP1 and RP2 faceplate constitute the standard method of alarm notification in the router. These LEDs indicate router status at all times, but you must directly observe these LEDs to become aware of a router alarm condition See xref table for LED descriptions.
- External alarm monitoring facility—By equipping your router with a telco-style external alarm monitoring facility, you can provide a more physical indication of router status. A visual alarm, however, can be reset only by resolving the problem that caused the alarm condition.

An external audible alarm can be reset by clearing the condition that caused the alarm or by pressing the Audible Cutoff (ACO) button on the Cisco ASR1000-RP1 and RP2. An audible alarm can be sounded to immediately alert you of an alarm condition in the router. An audible alarm generated by the system continues to sound until you either clear the alarm condition itself or press the ACO button to silence the alarm. Pressing this button does not resolve the alarm condition.

- To clear an audible alarm, do one of the following:
  - Press the Audible Cut Off button on the route processor faceplate (see xref fig)
  - Enter the **clear facility-alarm** command.
- To clear a visual alarm, you must resolve the alarm condition. The clear facility-alarm command does not clear an alarm LED on the RP faceplate or turn off the DC light bulb. For example, if a critical alarm LED is illuminated because an active SPA was removed without a graceful deactivation of the SPA, the only way to resolve that alarm is to replace the SPA.

Note For alarm relay pinouts, see xref table for Cisco ASR 1006 router and xref table for Cisco ASR 1004 router.

Cisco ASR 1000 Series Router Power Supplies

All Cisco ASR 1000 Series Router configurations support AC and DC power supply options. The modular chassis configurations support the installation of two power supplies for redundancy. When an external power supply fails or is removed, the other power supply provides power requirements for the chassis.

You are required to always have two power supplies installed in the chassis to insure sufficient cooling for the box. The system fans are inside the power supply unit and must spin for cooling. No Cisco ASR 1000 Series Router will operate for more than two to three minutes without two power supplies installed. Since all the system fans can be powered by one power supply, it is not required for the second power supply unit to be powered on, but it must be installed. Cisco IOS software specifically looks for two power supplies in the chassis and will automatically initiate a shutdown if only one power supply is detected.

This section contains the following topics:

Power Supply Requirements for All Cisco ASR 1000 Series Routers

This section contains power supply specifications for all Cisco ASR 1000 Series Routers. The following topics are covered:

- DC power supply input ratings and circuit breaker specifications
  - Maximum and minimum Amps for the branch circuit breakers
  - Maximum and minimum size of the AWG wire required for each circuit breaker.
- AC and DC power supply types
- AC and DC power supply ratings

DC Power System Input Requirements for Cisco ASR 1000 Series Routers

The DC power supply for the Cisco ASR 1006, Cisco ASR 1004, Cisco ASR 100, Cisco ASR 1013, and Cisco ASR 1001 routers operate at individual specifications.

The following table shows the common input ranges and circuit breaker requirements.

Table 14: Cisco ASR 1000 Series Router DC Power Supply System Input Requirements

Cisco ASR 1000 Series Router DC Power Supply	System Input Rating (Amps)	Circuit Breaker Amps	AWG # Wire		
		Minimum	Maximum	Minimum	Maximum
Cisco ASR 1006	40	Always 50	Always AWG #6 wire		
Cisco ASR 1004	24	30	40	10	8

Cisco ASR 1000 Series Router DC Power Supply	System Input Rating (Amps)	Circuit Breaker Amps	AWG # Wire		
Cisco ASR 1002: • –48 VDC • +24 VDC	16	20	30	12	10
	32	40	40	8	8
Cisco ASR 1013	40	Always 50	Always AWG #6 wire		
Cisco ASR 1001	14	20	30	10	10
Cisco ASR 1002-X: • –48 VDC • +24 VDC	16	20	30	12	10
	32	40	40	8	8
For example, the Cisco ASR 1002 Router DC power supply, with 16 Amp input rating must use an AWG #12 gauge wire for a 20 A circuit breaker and an AWG #10 gauge wire for a 30 A circuit breaker.					



Note All Cisco ASR 1000 Series Router AC power supplies must be connected to a branch circuit that does not exceed 20 A.

AC and DC Power Supply Types

The AC and DC power supplies for the Cisco ASR 1000 Series Routers support different types of power supply switches. The following table defines which power supplies the Cisco ASR 1000 Series routers support (a standby or an On/Off switch).

Table 15: Cisco ASR 1000 Series Routers AC and DC Power Supply Switches

Switch Type Supported	Symbol	Cisco ASR 1000 Series Router Power Supply
On/Off circuit	I/O	ASR 1006 –48 VDC ASR 1004 –48 VDC ASR 1002 AC ASR 1002-X AC

Switch Type Supported	Symbol	Cisco ASR 1000 Series Router Power Supply
Standby switch	A broken circle with a vertical line through the top of it	ASR 1006 AC ASR 1004 AC ASR 1002 –48 VDC ASR 1002 +24 VDC ASR 1013 AC and DC ASR 1001 AC and DC ASR 1002-X –48 VDC ASR 1002-X +24 VDC

AC and DC System Power Ratings

The following table lists AC and DC power supply system rating requirements for all Cisco ASR 1000 Series Routers.

Table 16: AC and DC Power Supply System Rating Specifications for the Cisco ASR 1000 Series Routers

Description	Specification
Power supply declared ratings	AC = 100-240 VAC
	DC = –48/ –60 VDC
	+24 VDC = +21 / +36 VDC
Nominal line frequency rating	50/60 Hz for AC power supplies

Power Supplies for the Cisco ASR 1006 Router

Note The information in this section applies to the ASR1006-PWR-DC and ASR1006-PWR-AC power supplies. The Cisco ASR 1006 Router also supports the ASR1013/06-PWR-DC and ASR1013/06-PWR-AC power supplies, which are described in the Power Supplies for the Cisco ASR 1013 Router, on page 63.

The Cisco ASR 1006 Router can support up to 1200 W output (AC and –48 VDC input). The 1200 W power supply module consists of either an AC or –48 VDC input and 1200 watt output closed frame power supply with two DC voltage outputs: 12 V and 3.3 V.

Each power supply module contains three internal fan modules and provides the forced air cooling for the chassis. These power supply modules contain a monitor circuit to determine the status of fan speed and operation along with LED status indicating fan errors.

The system temperature operation is 0 to 40C normal and –5C to +55C.

- AC System—AC power input is an IEC 320-type power inlet, 20A service connector. The AC input side contains a front panel with provisions for mounting screw, built in handle to extract the power supply, three status LEDs, and fans for power supply and system cooling.
- –48 VDC System—Two-position terminal block-style connector, with labeled connections for - (–48/60 V input) and + (–48/60 V Return). The –48 VDC input side contains a front panel with provisions for mounting screw, built in handle to extract the power supply, three status LEDs, and fans for power supply and system cooling.

See xref Appendix A, "Cisco ASR 1000 Series Router Specifications for detailed power supply specifications.

Warning This product relies on the building's installation for short-circuit (overcurrent) protection. Ensure that the protective device is rated not greater than: AC power supplies for the Cisco Aggregation Services Routers: 120 VAC, 20A U.S. maximum. DC power supplies for the Cisco ASR 1006 Router: 50A U.S. maximum; Cisco ASR 1004 Router: 40A U.S. maximum: Cisco ASR 1002 Router: 30A U.S. maximum. Statement 1005

AC Power Supply LEDs and Connector for Cisco ASR 1006

Note The information in this section applies to the ASR1006-PWR-AC power supply. If you are using the ASR1013/06-PWR-AC power supply, see the xref c_AC_Power_Supply_LEDs_and_Connector_for_Cisco_ASR_1013_1206731.xml.

The power supply module contains three fans. A total of six fans are used to cool the ASR 1006 system and power supply. The airflow direction is front to back.

Power supply modules with internal fan modules install into the rear of the chassis. These modules contain integral handles to ease installation and removal (no insertion or extraction levers are provided). A single blind mate connector located on the inlet side of these modules mates with a connector mounted on back side of the midplane.

Guide pins located at the rear of these modules help center locate the modules and reduce stress to the midplane and module mounted connectors. Four captive screws (tool operated latches) are provided on the modules face plate (chassis rear) to secure these modules into the chassis.

xref fig shows the ASR1006-PWR-AC power supply of the Cisco ASR 1006 Router. The Cisco ASR 1006 Router supports up to two power supplies. The power supply LEDs and connectors on the rear of the chassis are described in xref table.

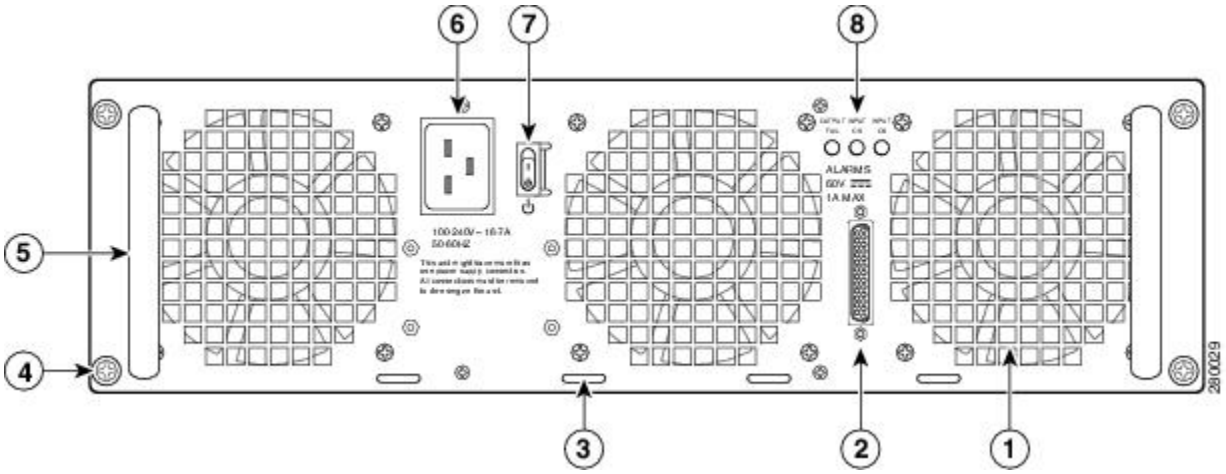

1	AC power supply fan	5	AC power supply handle
2	DB-25 alarm connector	6	AC power inlet
3	Tie-wrap tab	7	AC power supply standby switch
4	AC power supply captive screw	8	AC power supply LEDs

The following figure shows the AC power supply LEDs and DB-25 alarm connector.

Figure 10: Cisco ASR 1006 Router AC Power Supply LEDs and DB-25 Alarm Connector

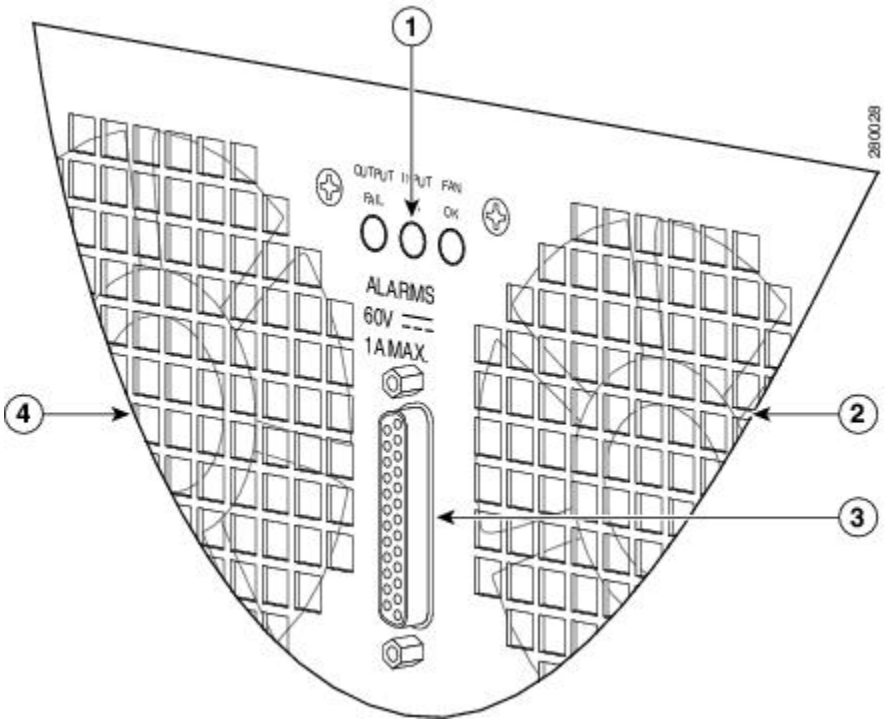

1	AC power supply LEDs	3	DB-25 alarm connector

2	AC power supply fan	4	AC power supply fan

The following table describes the AC power supply LEDs on the Cisco ASR 1006 Router.

Table 17: Cisco ASR 1006 Router AC Power Supply LEDs

LED Label	LED	Color	Description
INPUT OK	Power supply activity	Green	LED illuminates green to signal that the AC power supply input voltage is greater than 85 V.
		None	If LED is not illuminated, then the AC input voltage is less than 70 V or the power supply is turned off. For an AC input voltage between 70 V and 85V, the INPUT OK LED can be either on, off, or flashing
FAN OK	Bi-color LED indicates fan status	Green	LED illuminates green when all fans are operational.
		Red	The LED illuminates red when a fan failure is detected.
OUTPUT FAIL	Power supply activity	Red	LED is red and turned off to signal that the -48 VDC output voltages are within the normal operating range; output voltage between the minimum and maximum limits will not create an output fail alarm, and output voltages below the minimum or above the maximum will create an output fail alarm. When you turn the power supply on, the red LED is illuminated for two to three seconds for testing LED operation before going off.

–48 VDC Power Supply LEDs and Connectors for Cisco ASR 1006

Note The information in this section applies to the ASR1006-PWR-DC power supply. If you are using the ASR1013/06-PWR-DC power supply, see the xref c_–48_VDC_Power_Supply_LEDs_and_Connectors_for_Cisco_ASR_1013_1206865.xml.

The maximum branch circuit for the –48 VDC power supply module is 60 A and the minimum is 50 A. The –48 VDC power supply operates within specification from –48 VDC to –60 VDC continuously. The Cisco ASR 1006 Router has two of the same type power supplies in power supply slot 0 and power supply slot 1. The power supply slot numbers are on the left side of the chassis and the power supplies are located on the floor of the chassis.

The –48 VDC input connector is a terminal block style that supports a AWG #6 wire. The terminal block is compliant with safety agencies' guidelines and electrical requirements of the supply. Use the tie wraps to dress the input cable wires. There are three tie wrap tabs on the power supply.

The terminal block accepts two double-hole lugs, one for –48 V input and another for –48 V RTN. A plastic cover fits over the terminal block to prevent accidental contact. See xref figure.

Note The studs on the terminal block are similar to the safety ground device on the side of the Cisco ASR 1006 Router. For information on the safety ground lug on the side of the chassis.

The unit requires a power switch circuit breaker to serve as the main disconnect for the –48 VDC input to the power supply. The circuit breaker meets international safety requirements and supports 80 VDC and has a current rating of 50 A. The power supply unit is secured into the system chassis with four captive screws mounted on the faceplate.

The following figure shows the –48 VDC power supplies at the rear of the Cisco ASR 1006 Router. The Cisco ASR 1006 Router supports up to two power supplies.

Figure 11: Cisco ASR 1006 Router –48 VDC Power Supply

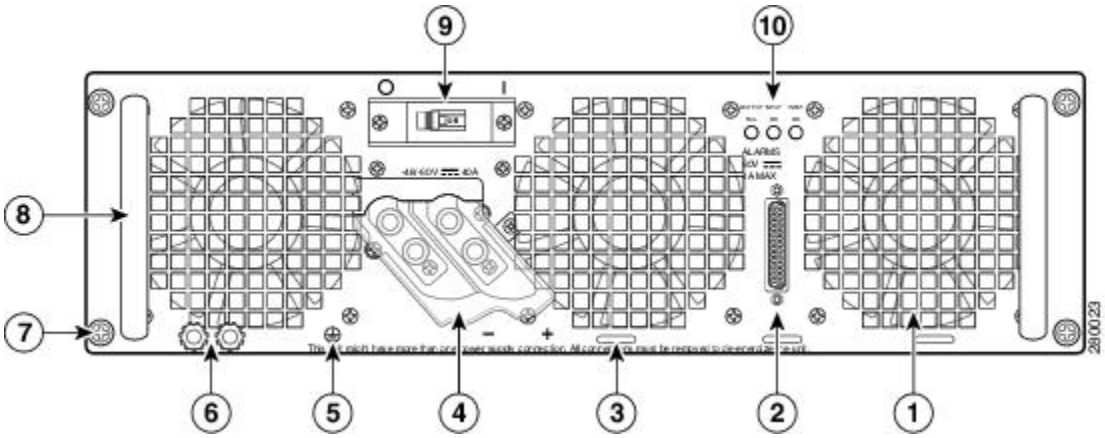

1	Fans	6	Ground lugs
2	DB-25 alarm connector	7	Captive screws
3	Tie-wrap tabs	8	Power supply handle
4	Terminal and plastic cover	9	Power supply On (|) /Off (O) switch
5	Grounding symbol	10	Power supply LEDs

The following table describes the power supply LEDs and connectors on the rear of the chassis.

Table 18: Cisco ASR 1006 Router –48 VDC Power Supply LEDs

LED Label	LED	Color	Description
INPUT OK	A bi-color LED indicates presence of input voltage	Green	LED illuminates green to signal that the –48 VDC power supply input voltage is greater than–43.5VDC at turn-on and remains green down to –39VDC.
		Amber	The LED illuminates amber when the input voltage (falls below –39VDC) and indicates that there is still a voltage present (voltage on the terminal block). The LED remains amber and is active to around 20 V +/-5 V. The LED is not illuminated if the input is below –15 V.
FAN OK	A bi-color LED indicates power supply fan status	Green	The LED illuminates s green when all fans are operational.
		Red	The LED illuminates red when a fan failure is detected.
OUTPUT FAIL	Power supply activity	Red	When the LED is off, it signals that the –48 VDC output voltage are within the normal operating range. Output voltage between the minimum and maximum limits will not create an output fail alarm, and output voltages below the minimum or above the maximum will create an Output Fail alarm. When you turn the power supply on, the red LED illuminates for two to three seconds to test LED operation before going off.

AC/DC Power System Output for Cisco ASR 1006

The power supply output tolerance is defined in the following table under all combinations of line variation. Total system consumption per power supply should not exceed 1200 W.

Table 19: Cisco ASR 1006 Router Power System Output Voltage and Current

Output Voltage	+12 VDC	+3.3 V
Minimum	11.80 VDC	3.20 VDC
Nominal	12.00 VDC	3.30 VDC
Maximum	12.20 VDC	3.40 VDC
Output Current		
Minimum	2.80 A	0.10 A
Maximum	101.7 A	3.125 A

Power Supplies for the Cisco ASR 1004 Router

The Cisco ASR 1004 Router can support up to 735 W output (AC and –48 VDC input). The 735 W power supply module consists of either an AC or –48 VDC input with two DC voltage outputs: 12 V and 3.3 V.

Each power supply module contains three internal fan modules and provides the forced air cooling for the chassis. These power supply modules contain a monitor circuit to determine the status of fan speed and operation along with LED status indicating fan errors.

The system temperature operation is 0 to 40C and –5C to +55C.

- AC System—AC power input is an IEC 320-type power inlet, 15A service connector. The AC input side contains a front panel with provisions for mounting screw, built in handle to remove the power supply, three status LEDs, and fans for power supply and system cooling.
- DC System—Three-position terminal block-style connector, with labeled connections for - (–48/60 V input) and + (–48/60 V Return) and GND (ground symbol). The –48 VDC input side contains a front panel with provisions for mounting screw, built in handle to extract the power supply, three status LEDs, and fans for power supply and system cooling.

See xref Appendix A, “Cisco ASR 1000 Series Router Specifications” for detailed power supply specifications.

Warning This product relies on the building’s installation for short-circuit (overcurrent) protection. Ensure that the protective device is rated not greater than: AC power supplies for the Cisco Aggregation Services Routers: 120 VAC, 20A U.S. maximum. DC power supplies for the Cisco ASR 1006 Router: 50A U.S. maximum; Cisco ASR 1004 Router: 40A U.S. maximum: Cisco ASR 1002 Router: 30A U.S. maximum. Statement 1005

Cisco ASR 1004 AC Power Supply

This section provides information about the AC power supplies on the rear of the Cisco ASR 1004 Router. The power supply module contains three fans. A total of six fans are used to cool the ASR 1004 system and power supply. The airflow direction is front to back.

Power supply modules with internal fan modules install into the rear of the chassis. These modules contain handles to ease installation and removal. The AC power supply has a front panel mounted switch that powers on and off the power supply. This switch will not disconnect the AC line, but will act only as a standby switch to the power supply. The front panel includes a mechanical guard to prevent the standby switch from being tripped due to accidental contact.

Guide pins located at the rear of these modules help center locate the modules and reduce stress to the midplane and module mounted connectors. Four captive screws (tool operated latches) are provided on the modules face plate (chassis rear) to secure these modules into the chassis.

Cisco ASR 1004 AC Power Supply LEDs and Connector

The following figure shows the AC power supplies at the rear of the Cisco ASR 1004 Router.The Cisco ASR 1004 Router supports up to two power supplies.

Figure 12: Cisco ASR 1004 Router AC Power Supply

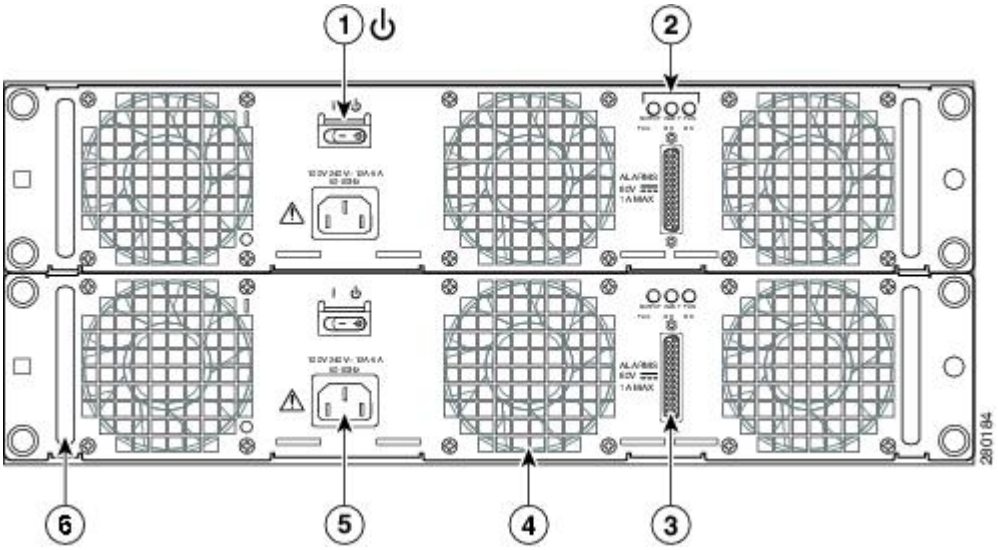

1	AC power supply standby switch (standby symbol is a broken circle with a vertical line through the top of it)	4	AC power supply fan
2	AC power supply LEDs	5	AC power inlet
3	DB-25 alarm connector	6	AC power supply handle

The following figure shows the AC power supply LEDs and DB -25 alarm connector.

Figure 13: Cisco ASR 1004 Router AC Power Supply LEDs and DB -25 Alarm Connector

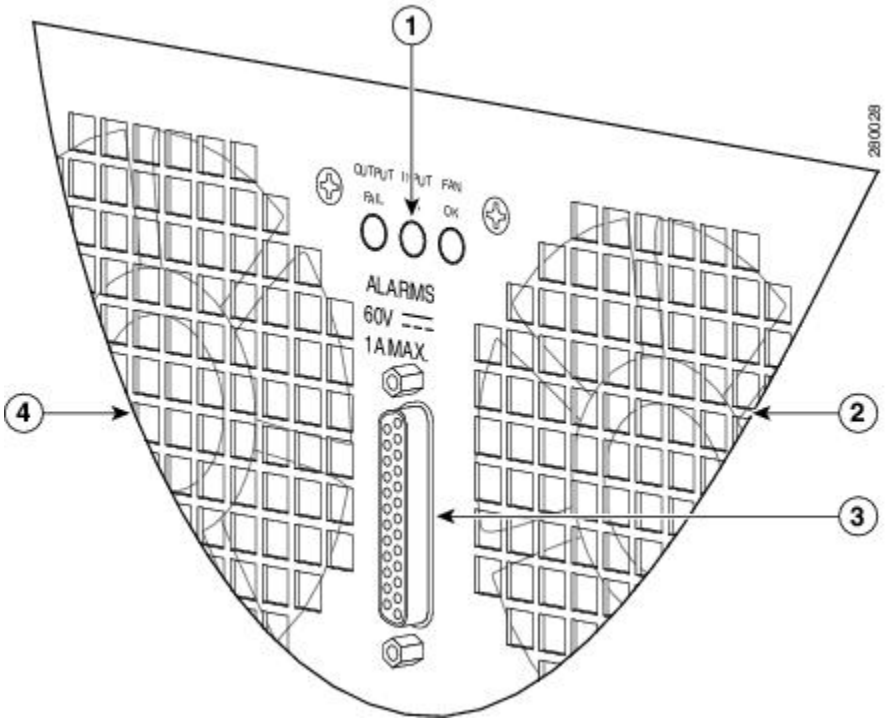

1	AC power supply LEDs	3	DB-25 alarm connector
2	Power supply fan	4	AC power supply fan

The following table describes the power supply LEDs and connectors on the rear of the chassis.

Table 20: Cisco ASR 1004 Router AC Power Supply LEDs and Connector

LED Label	LED	Color	Description
INPUT OK	Power supply activity	Green	LED illuminates green to signal that the AC power supply input voltage is greater than 85 V.
		None	If LED is not illuminated, then the AC input voltage is less than 70 V or the power supply is turned off. For an AC input voltage between 70 V and 85V, the INPUT OK LED can be either on, off, or flashing
FAN OK	Bi-color LED indicates fan status	Green	LED illuminates green when all fans are operational.
		Red	The LED illuminates red when a fan failure is detected.
OUTPUT FAIL	Power supply activity	Red	LED is red and turned off to signal that the –48 VDC output voltages are within the normal operating range; output voltage between the minimum and maximum limits will not create an output fail alarm, and output voltages below the minimum or above the maximum will create an output fail alarm. When you turn the power supply on, the red LED is illuminated for two to three seconds for testing LED operation before going off.

Cisco ASR Router 1004 –48 VDC Power Supply

This section provides information about the –48 VDC power supplies on the rear of the Cisco ASR 1004 Router. For the maximum branch circuit for the –48 VDC power supply module, see xref table.

The –48 VDC power supply operates within specification from –48 VDC to –60 VDC continuously. The Cisco ASR 1004 Router has two of the same type power supplies in power supply slot 0 and power supply slot 1. The power supply slot numbers are on the left side of the chassis and the power supplies are located on the floor of the chassis.

The –48 VDC power supply input connector is a terminal block style that will allow crimp type lugs accepting up to AWG #8 wire. The terminal block is compliant with safety agencies' guidelines and electrical requirements of the supply. The terminal block accepts two-hole lugs (#10 stud) for all connections with center to center spacing of 0.625 inches. A plastic cover goes over the terminal block to prevent accidental contact. The connection order is negative (–), positive (+), and GND.

The unit requires a power switch circuit breaker to serve as the main disconnect for the –48 VDC input to the power supply (xref table see for current rating requirements.) The power supply unit is secured into the system chassis with four captive screws mounted on the faceplate.

Cisco ASR 1004 Router –48 VDC Power Supply LEDs and Connector

The following figure shows the –48 VDC power supplies at the rear of the Cisco ASR 1004 Router. The Cisco ASR 1004 Router supports up to two power supplies.

Figure 14: Cisco ASR 1004 Router –48 VDC Power Supply

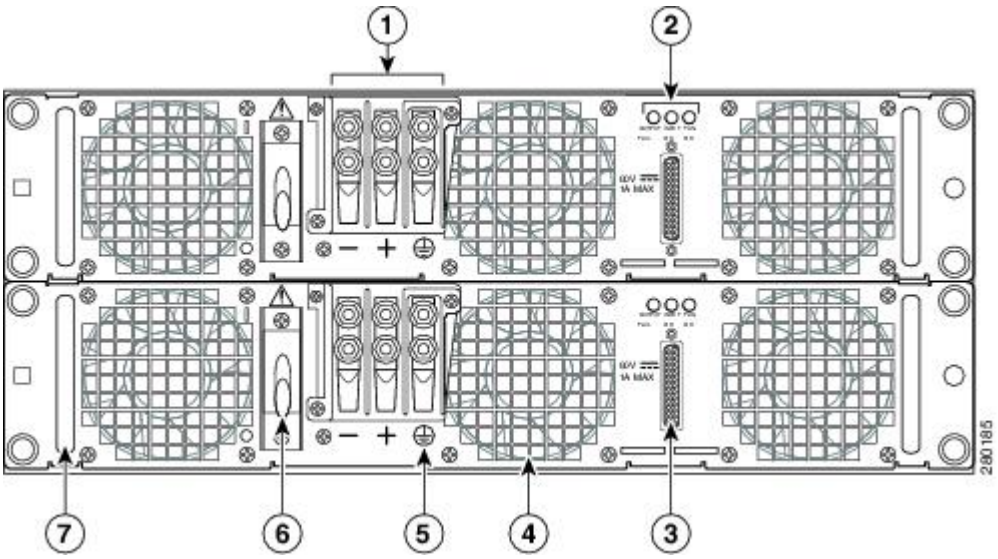

1	Terminal and plastic cover	5	Grounding symbol
2	Power supply LEDs	6	Power supply On (|) /Off (O) switch
3	DB-25 alarm connector Power supply ground lugs (+ and –)	7	Power supply handle
4	Power supply fan	—	—

The following table describes the power supply LEDs and connectors on the rear of the chassis.

Table 21: Cisco ASR 1004 Router –48 VDC Power Supply LEDs

LED Label	LED	Color	Description
INPUT OK	A bi-color LED indicates presence of input voltage	Green	LED illuminates green to signal that the –48 VDC power supply input voltage is greater than–43.5VDC at turn-on and remains green down to –39VDC.
		Amber	The LED illuminates amber when the input voltage (falls below –39VDC) and indicates that there is still a voltage present (voltage on the terminal block). The LED remains amber and is active to around 20 V +/-5 V. The LED is not illuminated if the input is below –15 V.
FAN OK	A bi-color LED indicates power supply fan status	Green	The LED illuminates s green when all fans are operational.
		Red	The LED illuminates red when a fan failure is detected.
OUTPUT FAIL	Power supply activity	Red	When the LED is off, it signals that the –48 VDC output voltage are within the normal operating range. Output voltage between the minimum and maximum limits will not create an output fail alarm, and output voltages below the minimum or above the maximum will create an Output Fail alarm. When you turn the power supply on, the red LED illuminates for two to three seconds to test LED operation before going off.

DC Power System Input for Cisco ASR 1004

The –48 VDC power supply operates within specification from –40.5VDC to –72VDC continuously once the power supply –48 VDC input turn on threshold of –43.5 V has been reached. The following table shows the common input ranges for *reference* only.

Table 22: Cisco ASR 1004 Router –48 VDC Power System Input

Voltage Range (VDC)	Minimum	Nominal	Maximum
Domestic	–40.5	–48	–56
International	–55	–60	–72

AC/DC Power System Output for Cisco ASR 1004

The power supply output tolerance is defined in the following table under all combinations of line variation. Total system consumption per power supply should not exceed 735 W.

Table 23: Cisco ASR 1004 Router Power System Output Voltage and Current

Output Voltage	+12 VDC	+3.3 V
Minimum	11.80 VDC	3.20 VDC

Output Voltage	+12 VDC	+3.3 V
Nominal	12.00 VDC	3.30 VDC
Maximum	12.20 VDC	3.40 VDC
Output Current		
Minimum	2.80 A	0.10 A
Maximum	61.44A	3.125 A

Power Supplies for the Cisco ASR 1002 Router

Note Unless otherwise noted, the Cisco ASR 1002-F Router and the Cisco ASR 1002-X Router supports all the general-purpose routing and security features of the Cisco ASR 1002 Router and uses the same internal control and data-plane architecture as Cisco ASR 1002 Router. The Cisco 24 V power supply is currently supported only on the Cisco ASR 1002 Router and the Cisco ASR 1002-X Router but not on the Cisco ASR 1002-F Router.

The Cisco ASR 1002 Router supports an AC or –48 VDC power supply and a +24 VDC power supply:

Cisco ASR 1002 Router Power Supply Fans

Cisco ASR 1002 Router system level cooling is provided by two 12 VDC type fans in each power supply module. The fans in each module provide system cooling back-up in the event of a single fan failure. In addition, the fans in each of the power supplies can be powered from a single supply when only one unit is operational. The airflow direction is front to back.

Warning This product relies on the building's installation for short-circuit (overcurrent) protection. Ensure that the protective device is rated not greater than: AC power supplies for the Cisco Aggregation Services Routers: 120 VAC, 20A U.S. maximum. DC power supplies for the Cisco ASR 1006 Router: 50A U.S. maximum; Cisco ASR 1004 Router: 40A U.S. maximum: Cisco ASR 1002 Router: 30A U.S. maximum. Statement 1005

Cisco ASR 1002 Router AC Power Supply

This section provides information about the AC power supplies on the rear of the Cisco ASR 1002 Router.

The Cisco ASR 1002 Router system level cooling is provided by two 12 VDC type fans in each of the two power supply modules. The fans in each module are intended to provide system cooling back-up in the event of a single fan failure. In addition, the fans in each of the power supplies can be powered from a single supply when only one unit is operational. The airflow direction is front to back. The power supplies plug directly into the Cisco ASR1000-RP1 and distributes power back to the midplane.

Guide pins located at the rear of these modules help center locate the modules and reduce stress to the midplane and module mounted connectors. Two captive screws (tool operated latches) are provided on the modules face plate (chassis rear) to secure these modules into the chassis.

Cisco ASR 1002 AC Power Supply LEDs and Connector

The following figure shows the AC power supplies at the rear of the Cisco ASR 1002 Router. The Cisco ASR 1002 Router supports up to two power supplies.

Figure 15: Cisco ASR 1002 Router AC Power Supply

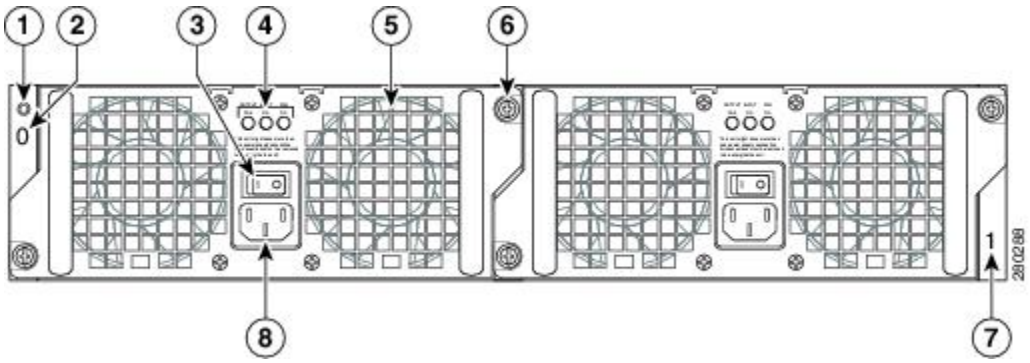

1	Chassis ESD socket	5	AC power supply fan
2	AC power supply slot number 0	6	AC power supply captive installation screw
3	AC power supply On (|) /Off (O) switch	7	AC power supply slot number 1
4	AC power supply LEDs	8	AC power inlet

The following table describes the power supply LEDs and connectors on the rear of the chassis.

Table 24: Cisco ASR 1002 Router Power Supply LEDs

LED Label	LED	Color	Description
INPUT OK	Power supply activity	Green	The AC input voltage is greater than 85V.
		None	If the LED is not illuminated, then either the input voltage is less than 70V, or the power supply is turned off. If the AC input voltage is between 70V and 85V, the INPUT OK LED can be on, off, or flashing.
FAN OK	Power supply fan activity A bi-color LED indicates fan status.	Green	All fans are operational.
		Red	A fan failure is detected.
OUTPUT FAIL	Power supply activity	Red	If the INPUT OK LED is illuminated, this LED is red if the DC output voltages are below the minimum limit or above the maximum limit. If the INPUT OK LED is not illuminated, this LED might be off or red.

AC Power System Output Voltage Alarm Range for Cisco ASR 1002 Router

The AC power supply output voltage alarm occurs when the output voltage is below the low end of the minimum or above the high end of the maximum limits shown in the following table.

Table 25: Cisco ASR 1002 Router AC Power Supply Output Voltage Alarm Range

Power Supply Type	Minimum	Maximum
12 V	10.0 to 11.2V	12.8 to 13.8 V
3.3 V	2.6 to 3.0 V	None

Cisco ASR 1002 Router –48 VDC Power Supply

This section provides information about the –48 VDC power supplies on the rear of the Cisco ASR 1002 Router. The recommended branch circuit breaker for the Cisco ASR 1002 Router –48 VDC power supply is 30 A. Use an AWG #10 maximum wire gauge on the 30 A circuit. The maximum branch circuit for the –48 VDC power supply module must not exceed 30 A.

The Cisco ASR 1002 Router has two of the same type power supplies in power supply slot 0 and power supply slot 1. The power supply slot numbers are on the left side of the chassis and the power supplies are located on the floor of the chassis. The power supply switch is a standby switch and is not considered a disconnect.

The –48 VDC input connector is a Euro-style terminal block. The largest size gauge of wire that the front panel euro-terminal block can accept is AWG #10 wire. The terminal block is compliant with safety agencies' guidelines and electrical requirements of the supply. Use the tie wraps to dress the input cable wires; there are two tie wrap tabs on the –48 VDC power supply.

The –48 VDC power supply unit is secured into the system chassis with two captive screws mounted on the faceplate.

Cisco ASR 1002 Router –48 VDC Power Supply LEDs and Connector

The following figure shows the –48 VDC power supplies at the rear of the Cisco ASR 1002 Router. The Cisco ASR 1002 Router supports up to two power supplies.

Figure 16: Cisco ASR 1002 Router –48 VDC Power Supply

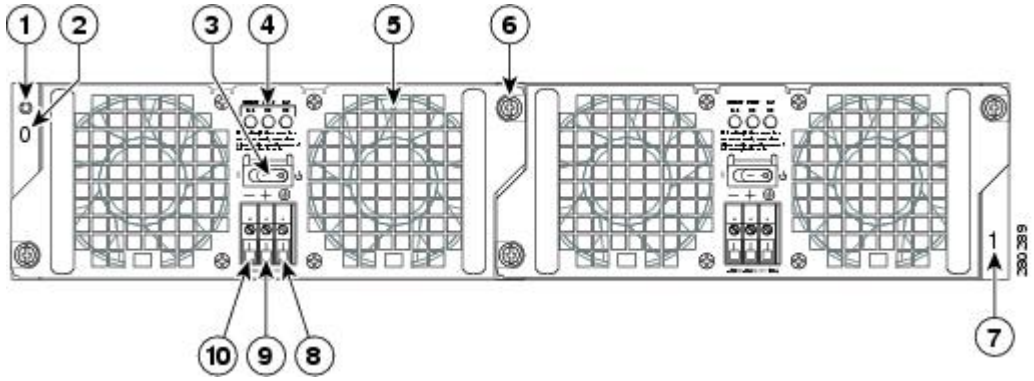

1	Chassis ESD socket	6	Power supply captive installation screw
2	Power supply slot 0 label	7	Power supply slot 1 label
3	Power supply switch standby/On (|)	8	Ground lead
4	Power supply LEDs	9	Positive lead
5	Fan	10	Negative lead

The following table describes the power supply LEDs and connectors on the rear of the chassis.

Table 26: Cisco ASR 1002 Router –48 VDC Power Supply LEDs

LED Label	LED	Color	Description
INPUT OK	A bi-color LED indicates presence of input voltage	Green	LED illuminates green to signal that the –48 VDC power supply input voltage is greater than–43.5VDC at turn-on and remains green down to –39VDC.
		Amber	The LED illuminates amber when the input voltage (falls below –39VDC) and indicates that there is still a voltage present (voltage on the terminal block). The LED remains amber and is active to around 20 V +/-5 V. The LED is not illuminated if the input is below –15 V.
FAN OK	A bi-color LED indicates power supply fan status	Green	The LED illuminates s green when all fans are operational.
		Red	The LED illuminates red when a fan failure is detected.
OUTPUT FAIL	Power supply activity	Red	When the LED is off, it signals that the –48 VDC output voltage are within the normal operating range. Output voltage between the minimum and maximum limits will not create an output fail alarm, and output voltages below the minimum or above the maximum will create an Output Fail alarm. When you turn the power supply on, the red LED illuminates for two to three seconds to test LED operation before going off.

–48 VDC Power System Input for Cisco ASR 1002 Router

The –48 VDC power supply operates within specification from –40.5VDC to –72VDC continuously once the power supply –48 VDC input turn on threshold of –43.5 V has been reached. The following table shows the common input ranges for *reference* only. The –48 VDC power input connector is a Euro-style terminal block that accepts three wires, one positive, one negative, and one grounding wire.

Table 27: Cisco ASR 1002 Router –48 VDC Power System Input

Voltage Range (VDC)	Minimum	Nominal	Maximum
Domestic	–40.5	–48	–56
International	–55	–60	–72

–48 VDC Power System Output for Cisco ASR 1002 Router

The –48 VDC power supply output tolerance is defined in the following table under all combinations of –48 VDC input line variation. Total system power consumption should not exceed 470 watts or output rating of each power supply.

Note Two power supplies are used for redundant operation. System total power consumption shall never exceed rating of one power supply to maintain redundancy.

Table 28: Cisco ASR 1002 Router –48 VDC Power System Output Voltage and Current

Output Voltage	+12 VDC	+3.3 V
Minimum	–11.80 VDC	–3.20 VDC
Nominal	–12.00 VDC	–3.30 VDC
Maximum	–12.20 VDC	–3.40 VDC
Output Current		
Minimum	–2.0 A	–0.10 A
Maximum	–39 A	–3.125 A

Cisco ASR 1002 Router +24 VDC Power Supply

This section provides information about the +24 VDC power supplies on the rear of the Cisco ASR 1002 Router. The recommended branch circuit breaker for the Cisco ASR 1002 Router +24 VDC power supply is a 40 A UL listed circuit breaker.

The Cisco ASR 1002 Router has two of the same type power supplies in power supply slot 0 and power supply slot 1. The power supply slot identifiers are zero (0) on the left side of the chassis rear and one (1) on the right side of the chassis rear. The power supply switch is a standby switch and is not considered a disconnect.

The +24 VDC power supply uses a spring-loaded terminal block. The input terminal block requires maximum 8AWG multi-strand wiring to support input current. The terminal block is compliant with safety agencies' guidelines and electrical requirements of the supply. Use the tie wraps to dress the input cable wires; there are two tie wrap tabs on the +24 VDC power supply. The +24 VDC power supply unit is secured into the system chassis with two captive screws mounted on the faceplate.

Cisco ASR 1002 Router +24 VDC Power Supply LEDs and Connector

The following figure shows the +24 VDC power supplies at the rear of the Cisco ASR 1002 Router. The Cisco ASR 1002 Router supports two +24 VDC power supplies.

Figure 17: Cisco ASR 1002 Router Rear View With +24 VDC Power Supply

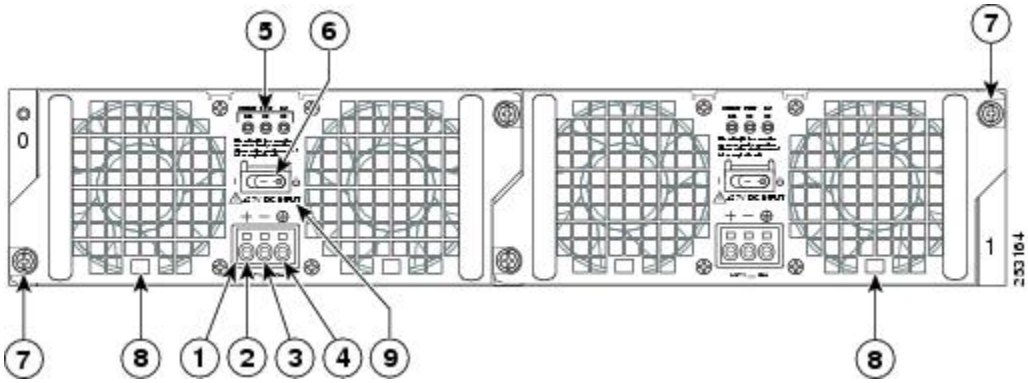

1	+24 VDC terminal block	6	Standby/On switch
2	Positive (+) lead	7	Captive fastener
3	Negative (-) lead	8	Power supply tabs
4	Ground (GND) lead	9	+27 VDC INPUT label
5	Power supply LEDs	—	—

Note The +24 VDC power supply product is labeled at *+27 VDC input* because the typical battery float voltage is +27V; but generically, these power systems can be labeled +24 V and referred to as +24 VDC (see the following figure for more information).

Figure 18: Cisco ASR 1002 Router Rear View With +24 VDC Power Supply Terminal Block

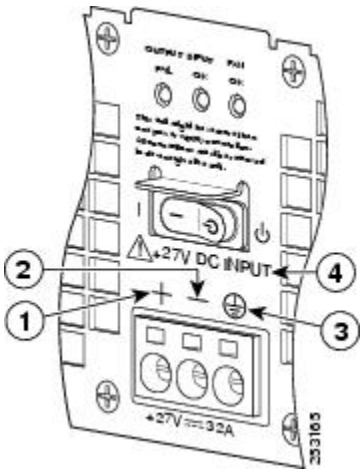

1	Positive (+) lead	6	GROUND (GND) LEAD
2	Negative (-) lead	7	+27VDC label

The following table describes the power supply LEDs and connectors on the rear of the chassis.

Table 29: Cisco ASR 1002 Router +24 VDC Power Supply LEDs

LED Label	LED	Color	Description
OUTPUT FAIL	Power supply activity	Red	When the LED is off, it signals that the +24 VDC output voltage are within the normal operating range. Output voltage between the minimum and maximum limits will not create an output fail alarm, and output voltages below the minimum or above the maximum will create an Output Fail alarm. When you turn the power supply on, the red LED illuminates for two to three seconds to test LED operation before going off.
INPUT OK	A bi-color LED indicates presence of input voltage	Green	LED illuminates green to signal that voltage is > or = to 20VDC at turn-on and down to 19.0VDC (+/- 0.5 V tolerance).
		Amber	The LED illuminates amber when the input voltage is active down to 16.0VDC and indicates that there is still a voltage present (voltage on the terminal block). The LED remains amber and is active to around 10 V. The LED can be OFF below 15.8VDC.
FAN OK	A bi-color LED indicates power supply fan status	Green	The LED illuminates s green when all fans are operational.
		Red	The LED illuminates red when a fan failure is detected.

+24 VDC Power System Input for Cisco ASR 1002 Router

The +24 VDC power supply operates within specification between +21 and +36 VDC continuously once the power supply DC input is turned on. The power supply shall measure the input voltage at the terminals of the power supply and turn off the supply when the input voltage reaches 19.0 volts +/- 0.5 volts. Once this low voltage threshold is reached, the power supply does not resume operation until the input voltage has reached 20.0 volts +/- 0.5 volts. Once the turn-on threshold of 20 volts is reached, then the +24 VDC power supply meets all specification requirements down to low voltage threshold of 19 volts (+/- tolerance).

+24 VDC Power System Output for Cisco ASR 1002 Router

The +24 VDC power supply output tolerance is defined in the following table under all combinations of +24 VDC input line variation. Total system power consumption should not exceed 470 watts or output rating of each power supply.



Note Two power supplies are used for redundant operation. System total power consumption shall never exceed rating of one power supply to maintain redundancy.

Table 30: Cisco ASR 1002 Router +24 VDC Power System Output Voltage and Current

Output Voltage	+12 VDC	+3.3 V
Minimum	11.80	3.20

Output Voltage	+12 VDC	+3.3 V
Nominal	12.00	3.30
Maximum	12.20	3.40
Output Current		
Minimum	2.0 A	0.10 A
Maximum	39 A	3.125 A

Note Any combination of output voltage/currents cannot exceed total power rating of 470 Watts.

+24 VDC Power Supply Important Notices

The following items list important notes regarding the +24 VDC power supply in the Cisco ASR 1002 Router:

- Output Voltage Alarm Threshold—The Output Voltage Alarm is declared when the output voltage is below the low end of the minimum or above the high end of the maximum limits (as shown in the following table). When the output voltage is above the high end of the minimum or below the low end of the maximum limits, then the Red state is not activated.

Table 31: +24 VDC Output Voltage Alarm Threshold Ranges

Output	Minimum	Maximum
12V	10.0-11.2V	12.8-13.8V
3.3V	2.6 – 3.0V	None

- Temperature—If a single fan fails, the power supply meets the functional requirements specified in Table 24. Above 55°C with less than two fans, calculated MTBF does not apply; however all component stress remains within the manufacturer's specified rating.
- Thermal Shutdown—The +24 VDC power supply will shut down to protect its components due to excessive internal temperature. The +24 VDC power supply then automatically restarts if the internal temperature returns to a safe operating level.

Power Supplies for the Cisco ASR 1013 Router

Note The information in this section applies to the ASR1013/06-PWR-DC and ASR1013/06-PWR-AC power supplies. These power supplies are supported by both the Cisco ASR 1013 Router and the Cisco ASR 1006 Router. However, the power zones mentioned in this section are supported only on the Cisco ASR 1013 Router.

The Cisco ASR 1013 Router can support up to 1600 W output and operates between 180 VAC and 260 VAC. The 1600 W power supply module consists of either an AC or –48 VDC input and 1600 watt output closed

frame power supply with two DC voltage outputs: +12 V and +3.3 V can be used as a single supply, dual, triple, or quadruple hot pluggable system.

Note The Cisco ASR 1013 router power supply +12 V is not bussed between the two power zones but the +3.3 V is bussed between them.

The Cisco ASR 1013 system has two power zones, each powered by two power supplies in a redundant configuration. Three power voltages are provided by the dual 1+1 configured power supplies, which are 12V_A, 12V_B, and 3.3V_BACKPLANE. The12V_A AND 121V_B are distributed to provide power to one half of the chassis each. A single (non-redundant) or a dual (1 + 1 redundant) supply configuration is able to support loads up to 1600 W on the 12 V and 10 W on the 3.3 V output.

Each power supply module contains three internal fan modules and provides the forced air cooling for the chassis. These power supply modules contain a monitor circuit to determine the status of fan speed and operation along with LED status indicating fan errors.

The system temperature operation is 0 to 40C normal and –5C to +55C.

AC System—AC power input is an IEC 320-type power inlet, 20 A service connector. The switch does not disconnect the AC line; but enables the signal to the power supply. The AC cord disconnects the power supply from the AC source. The unit is secured with four captive fasteners mounted on the faceplate (see xref Figure 2-15). The AC power supply input range operates within specification from 180 VAC to 264 VAC.

- –48 VDC System—Two-position terminal block-style connector, with labeled connections for - (–48/60 V input) and + (–48/60 V Return). The –48 VDC input side contains a front panel with provisions for mounting screw, built in handle to extract the power supply, three status LEDs, and fans for power supply and system cooling.

The DC input range is –40.5 to –72 VDC.

See xref Appendix A, “Cisco ASR 1000 Series Router Specifications” for detailed power supply specifications.

Warning This product relies on the building’s installation for short-circuit (overcurrent) protection. Ensure that the protective device is rated not greater than: AC power supplies for the Cisco Aggregation Services Routers: 120 VAC, 20A U.S. maximum. DC power supplies for the Cisco ASR 1013 Router and Cisco ASR 1006 Router: 50A U.S. maximum; Cisco ASR 1004 Router: 40A U.S. maximum: Cisco ASR 1002 Router: 30A U.S. maximum. Statement 1005

AC Power Supply LEDs and Connector for Cisco ASR 1013

This section provides information about the AC power supplies on the rear of the Cisco ASR 1013 Router. The power supply module contains three fans. A total of six fans are used to cool the ASR 1013 system and power supply. The airflow direction is front to back.

Note The information in this section applies to the ASR1013/06-PWR-AC power supply. The Cisco ASR 1013 Router and the Cisco ASR 1006 Router support this power supply.

Power supply modules with internal fan modules install into the rear of the chassis. These modules contain integral handles to ease installation and removal (no insertion or extraction levers are provided).

Guide pins located at the rear of these modules help center locate the modules and reduce stress to the midplane and module mounted connectors. Four captive screws (tool operated latches) are provided on the modules face plate (chassis rear) to secure these modules into the chassis. The following figure shows the AC power supply for the Cisco ASR 1013 Router. The Cisco ASR 1013 Router supports up to four power supplies.

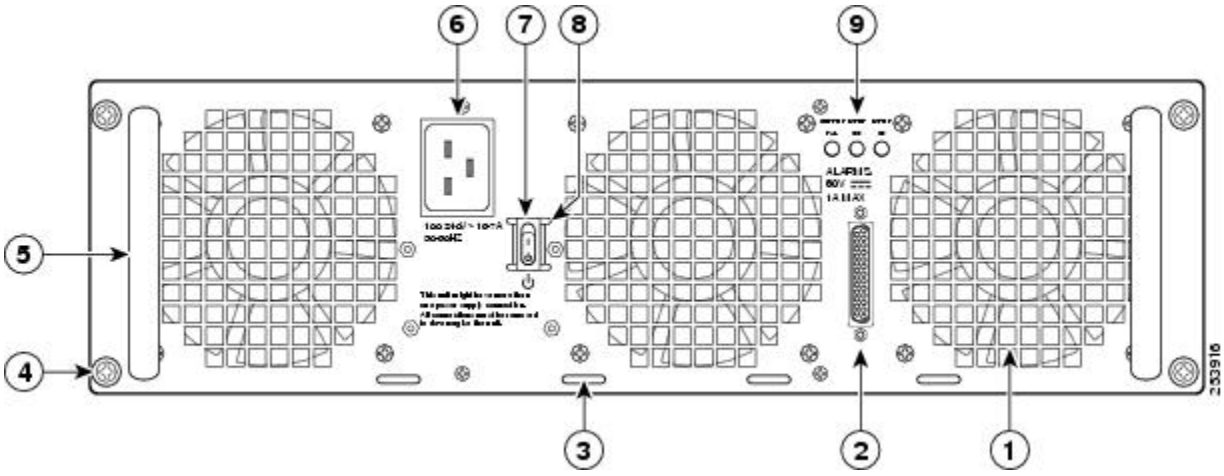

1	AC power supply fan	6	AC power inlet
2	DB-25 alarm connector	7	AC power supply standby switch
3	Tie-wrap tab	8	Protective shielding on both sides of the standby switch
4	AC power supply captive screw	9	AC power supply LEDs
5	AC power supply handle	—	—

The following figure shows the AC power supplies LEDs and DB-25 Alarm connector.

Figure 19: Cisco ASR 1013 Router AC Power Supply LEDs and DB-25 Alarm Connector

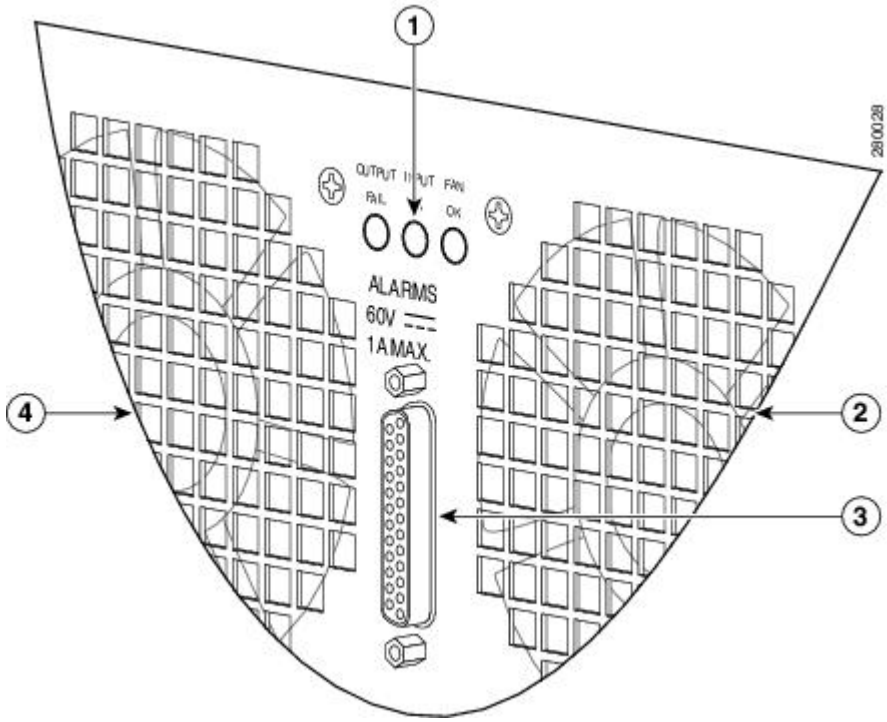

1	AC power supply LEDs	3	DB-25 alarm connector
2	AC power supply fan	4	AC power supply fan

The following table describes the AC power supply LEDs on the Cisco ASR 1013 Router.

Table 32: Cisco ASR 1013 Router AC Power Supply LEDs

LED Label	LED	Color	Description
INPUT OK	Power supply activity	Green	LED illuminates green to signal that the AC power supply input voltage is greater than 85 V.
		None	If LED is not illuminated, then the AC input voltage is less than 70 V or the power supply is turned off. For an AC input voltage between 70 V and 85V, the INPUT OK LED can be either on, off, or flashing
FAN OK	Bi-color LED indicates fan status	Green	LED illuminates green when all fans are operational.
		Red	The LED illuminates red when a fan failure is detected.

LED Label	LED	Color	Description
OUTPUT FAIL	Power supply activity	Red	LED is red and turned off to signal that the –48 VDC output voltages are within the normal operating range; output voltage between the minimum and maximum limits will not create an output fail alarm, and output voltages below the minimum or above the maximum will create an output fail alarm. When you turn the power supply on, the red LED is illuminated for two to three seconds for testing LED operation before going off.

–48 VDC Power Supply LEDs and Connectors for Cisco ASR 1013

This section provides information about the –48 VDC power supplies on the rear of the Cisco ASR 1013 Router. The maximum branch circuit for the–48 VDC power supply module is 60 A and the minimum is 50 A.

Note The information in this section applies to the ASR1013/06-PWR-DC power supply. The Cisco ASR 1013 Router and the Cisco ASR 1006 Router support this power supply.

The –48 VDC power supply operates within specification from –40.5 VDC to –72 VDC continuously. The Cisco ASR 1013 Router has two of the same type power supplies in power supply slot 0 and power supply slot 1. The power supply slot numbers are on the left side of the chassis and the power supplies are located on the floor of the chassis.

The –48 VDC input connector is a terminal block style that supports a AWG #6 wire. The terminal block is compliant with safety agencies' guidelines and electrical requirements of the supply. Use the tie wraps to dress the input cable wires. There are three tie wrap tabs on the power supply.

The terminal block accepts two-hole lugs, one for the –48 V input and the other for the –48 V RTN. A plastic cover is fitted over the terminal block to prevent accidental contact.

Note The studs on the terminal block are similar to the safety ground device on the bottom rear of the Cisco ASR 1013 Router. For information on the safety ground lug on bottom rear of the chassis, see the xref "Attaching a Chassis Ground Connection" section.

The unit requires a power switch circuit breaker to serve as the main disconnect for the –48 VDC input to the power supply. The circuit breaker meets international safety requirements and supports 80VDC and has a current rating of 50 A. The power supply unit is secured into the system chassis with four captive screws mounted on the faceplate.

The following figure shows the –48 VDC power supplies at the rear of the Cisco ASR 1013 Router. The Cisco ASR 1013 Router supports up to four power supplies.

Figure 20: Cisco ASR 1013 Router –48 VDC Power Supply

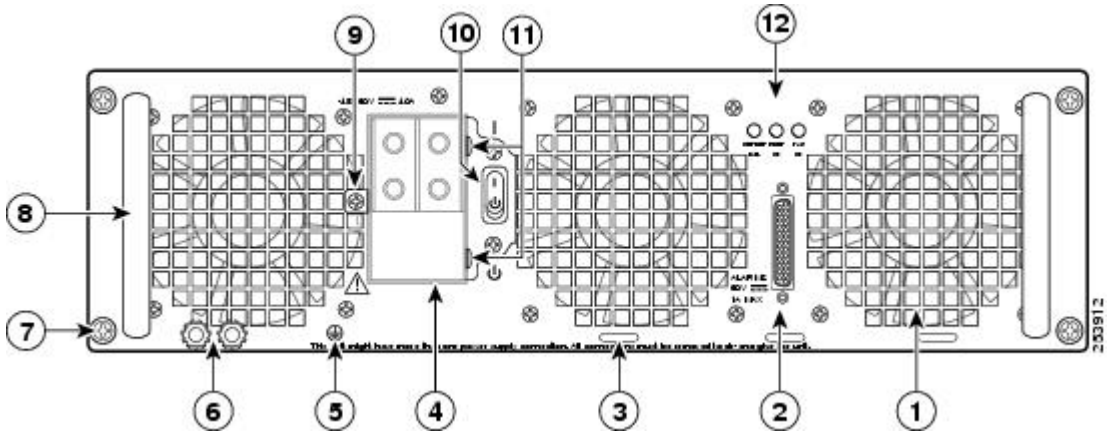

1	Fan	7	DC power supply captive screw
2	DB-25 alarm connector*	8	DC power supply handle
3	Tie-wrap tab	9	Terminal block and plastic cover single screw
4	DC power supply terminal block and plastic cover	10	On/Off (|/O) circuit breaker switch
5	Ground symbol	11	Terminal block and plastic cover slot tab
6	DC power supply ground studs	12	Power supply LEDs

The following table describes the power supply LEDs and connectors on the rear of the chassis.

Table 33: Cisco ASR 1013 Router –48 VDC Power Supply LEDs

LED Label	LED	Color	Description
INPUT OK	A bi-color LED indicates input voltage	Green	LED illuminates green to signal that the –48 VDC power supply input voltage is greater than–43.5VDC at turn-on and remains green down to –39VDC.
		Amber	The LED illuminates amber when the input voltage (falls below –39VDC) and indicates that there is still a voltage present (voltage on the terminal block). The LED remains amber and is active to around 25 V +/-5 V. The LED is not illuminated if the input is below –15 V input.
FAN OK	A bi-color LED indicates power supply fan status	Green	The LED illuminates s green when all fans are operational.
		Red	The LED illuminates red when a fan failure is detected.
OUTPUT FAIL	Power supply activity	Red	When the LED is off, it signals that the –48 VDC output voltage are within the normal operating range. Output voltage between the minimum and maximum limits will not create an output fail alarm, and output voltages below the minimum or above the maximum will create an Output Fail alarm. When you turn the power supply on, the red LED illuminates for two to three seconds to test LED operation before going off.

AC/DC Power System Output for Cisco ASR 1013

The power supply output tolerance is defined in the following table under all combinations of line variation. Total system consumption per power supply should not exceed 1600 W.

Note The output tolerance values shown in this table apply to the ASR1013/06-PWR-DC and ASR1013/06-PWR-AC power supplies. The Cisco ASR 1013 Router and the Cisco ASR 1006 Router support these power supplies.

Table 34: Cisco ASR 1013 Router Power System Output Voltage and Output Current

Output Voltage	+12 VDC	+3.3 V
Minimum	11.80 VDC	3.20 VDC
Nominal	12.00 VDC	3.30 VDC
Maximum	12.20 VDC	3.40 VDC
Output Current		
Minimum	0 A	0 A
Maximum	136 A	3.125 A

Power Supplies for the Cisco ASR 1001 Router

Each Cisco ASR 1001 Router power supply provides 400 W of output power. The power supplies are used in a 1 + 1 redundant configuration. There is no input switch on the faceplate of the power supplies. The power supply is switched from standby to On by way of a system chassis STANDBY/ON switch. The power supply slot numbers are on the rear of the chassis to the left side of each power supply. When facing the rear of the chassis, power supply slot 0 (PS0) is to the left and power supply slot 1(PS1) is to the right (next to the power supply standby switch).

The Cisco ASR 1001 Router supports the following power supplies:

- Cisco ASR 1001 Router AC power supply—Provides 400 watt output power with two DC voltage outputs: +12 V and +5 V. The AC power supply operates between 85 and 264 VAC. The AC power supply current shares on the 12 V output and is used in a dual hot pluggable configuration. The AC power supply consumes a maximum of 471 W of input power.
- Cisco ASR 1001 Router DC power supply—Provides 400 watt output power with two DC voltage outputs: +12 V and +5.0 V. The power supply operates between –40.5 and –72 VDC. The DC power supply current shares on the 12 V output and is used in a dual hot pluggable configuration. The DC power supply consumes a maximum of 500 W of input power.

Note The Cisco ASR 1001 Router can support two AC or two DC power supplies. Do not install the AC and DC power supply units in the same chassis.

The following figure shows both the AC and DC power supplies for the Cisco ASR 1001 Router.

Figure 21: Cisco ASR 1001 Router AC Power Supply and DC Power Supply

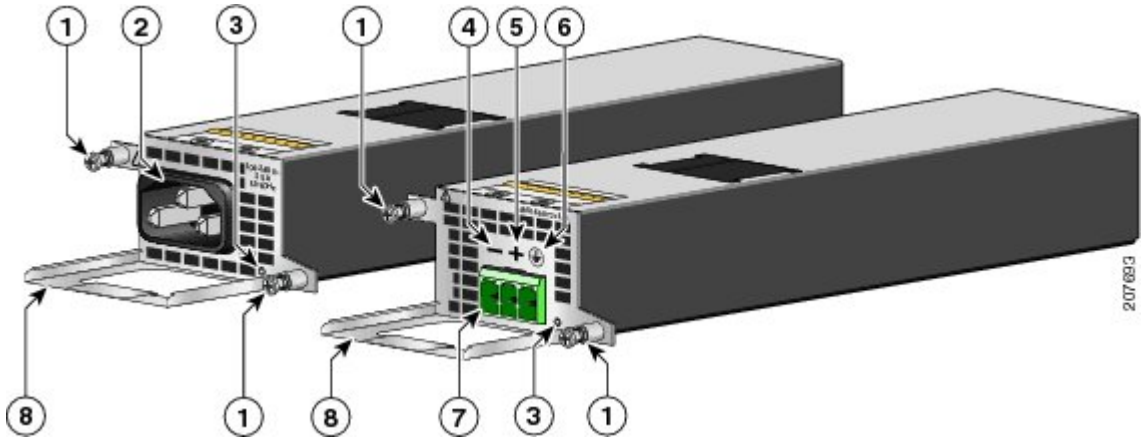

1	AC and DC power supply fasteners	5	DC power supply ground symbol
2	AC power supply inlet	6	DC power supply terminal block connection
3	DC power supply negative (-) connection	7	AC and DC power supply handles
4	DC power supply positive (+) connection	—	—

Cisco ASR 1001 Router Power Supply Fans

Cisco ASR 1001 Router system-level cooling is provided by seven fans in each chassis at rated 12 VDC voltage. Fan failure is determined by fan rotation sensors. A fan failure state is declared when the actual speed of a fan is less than 60% of its nominal speed. The fans provide system cooling backup in the event of a single-fan failure. The airflow direction is front to back.

Warning This product relies on the building's installation for short-circuit (overcurrent) protection. Ensure that the protective device is rated not greater than: AC power supplies for the Cisco Aggregation Services Routers: 120 VAC, 20A U.S. maximum. DC power supplies for the Cisco ASR 1006 Router: 50A U.S. maximum; Cisco ASR 1004 Router: 40A U.S. maximum: Cisco ASR 1002 Router: 30A U.S. maximum, Cisco ASR 1001 Router: 10A U.S. maximum Statement 1005

Cisco ASR 1001 Router AC Power Supply

The Cisco ASR 1001 Router has two AC power supplies in the rear of the chassis. The input receptacle is an IEC60320 C14 type of filtered AC inlet. The current rating on the connector is 10 A. The following figure shows the ASR 1001 Router AC power supplies.

Figure 22: Cisco ASR 1001 Router AC Power Supplies



Cisco ASR 1001 Router DC Power Supply

The Cisco ASR 1001 Router DC input connector is compatible with a pluggable Euro-style plug. The input connector and plug must be UL recognized under UL 486 for field wiring. The connection polarity is from left to right: negative (–), positive (+), and ground.

The power supply has a handle to be used for insertion and extraction. The module must be supported with one hand because of its length. The following figure shows the Cisco ASR 1001 Router DC power supplies.

Figure 23: Cisco ASR 1001 Router With DC Power Supplies

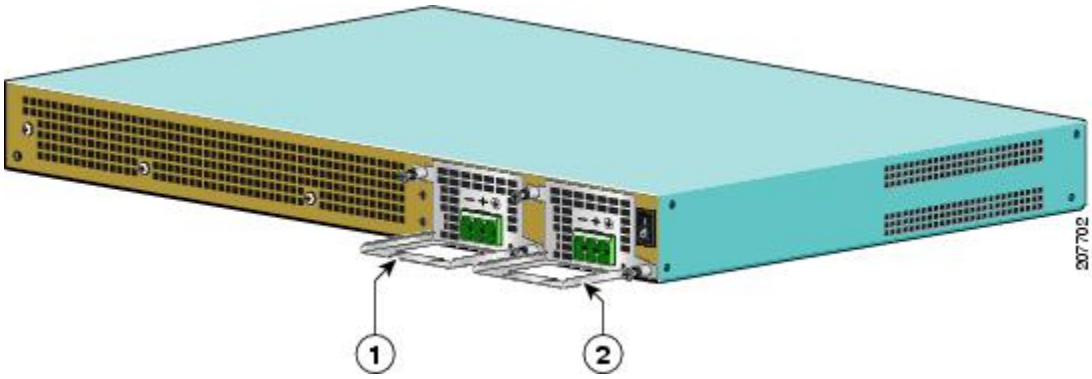

1	DC power supply in slot PS0	2	DC power supply in slot PS1

AC/DC Power System Input Range and Voltage for Cisco ASR 1001

The power supply DC Input Range is –40.5 to –72 VDC, and the AC Input Range is 85 to 264 VAC. The following table describes the Cisco ASR 1001 Router power supply LED.

Table 35: Cisco ASR 1001 Router—AC and DC Power Supply LED

LED Label	LED	Color	Description
PWR OK	Indicates power supply status	Red	Off if output power is within specification range

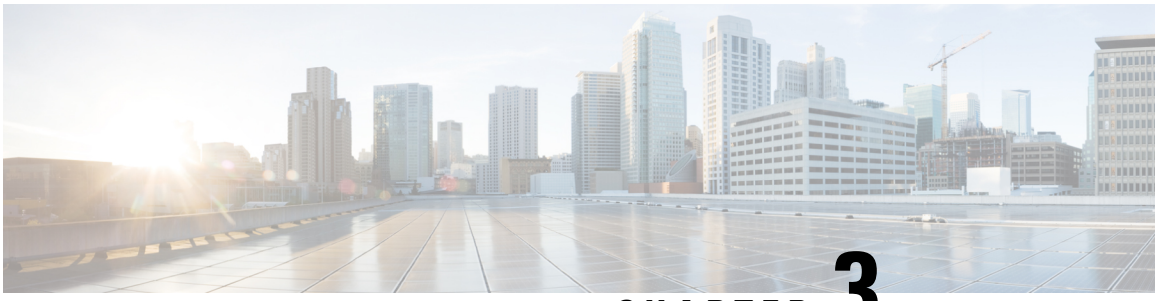

CHAPTER 3

Cisco ASR 1000 Series Routers Embedded Services Processors

The Cisco ASR 1000 Series embedded services processors are based on the Cisco QuantumFlow Processor (QFP) for next-generation forwarding and queuing. These embedded service processors provide centralized forwarding-engine options for the Cisco ASR 1000 Series Aggregation Services Routers.

Additionally, the Cisco ASR 1002 Fixed Router includes a nonmodular, fixed embedded services processor with a throughput of 2.5 Gbps and the Cisco ASR 1001 Router has a nonmodular, fixed embedded services processor with a throughput of 2.5 Gbps, which is upgradable with a software activated performance upgrade license to 5 Gbps.

The Cisco ASR 1000 Series embedded service processors:

- Provide the centralized embedded forwarding services responsible for the bulk of the data plane processing tasks. All network traffic through the Cisco ASR 1000 Series system flows through the Cisco ASR 1000 Series Embedded Services Processors.
- Are responsible for the data-plane processing tasks and all network traffic flows through them.
- Support Forwarding Engine Control Processor which provide hardware abstraction layer between the QFP-based forwarding engine and other system components, allowing datapath and management functions to be independent.
- Support Cisco QuantumFlow Processor (QFP) forwarding engines.
- Support QFP provisioned with two TCAM4 devices for ACL lookup and other software features.
- Perform all baseline packet routing operations, including MAC classification, Layer 2 and Layer 3 forwarding, quality-of-service (QoS) classification, policing and shaping, security access control lists (ACLs), VPNs, load balancing, NetFlow.
- Are responsible for features such as firewalls, intrusion prevention, Network Based Application Recognition (NBAR), Network Address Translation (NAT), and flexible pattern matching.
- Incorporates a security encryption coprocessor to assist encryption processing common to all embedded services processors. The security processor operates in coprocessor mode and only processes packets sent to it by the Cisco QFP.
- Provide hardware abstraction layer between the packet processing-based forwarding engine and other system components.

The Cisco ASR1000-ESP5, Cisco ASR1000-ESP10, Cisco ASR1000-ESP10-N, Cisco ASR1000-ESP20, Cisco ASR1000-ESP40, Cisco ASR1000-ESP100, and Cisco ASR1000-ESP200 provide centralized forwarding-engine options for the Cisco ASR 1000 Series Aggregation Services Routers. The Cisco ASR 1002-F Router includes a nonmodular, integrated embedded services processor with a forwarding bandwidth (throughput) of 2.5 Gbps. The integrated embedded services processor of the Cisco ASR 1002-X Router can provide a forwarding bandwidth of 5 Gbps, 10 Gbps, 20 Gbps, or 36 Gbps.

The Cisco ASR1000-ESP10-N is the nonencryption version of the Cisco ASR1000-ESP10. The Cisco ASR1000-ESP10-N can only support noncrypto Cisco IOS software images. It does not support encryption capabilities such as IPsec.

Note The embedded services processor can be upgraded only on redundant embedded services processor systems (Cisco ASR 1006 Router and Cisco ASR 1013 Router). The Cisco ASR 1002 router supports only one Cisco ASR1000-ESP5 or ASR1000-ESP10. The Cisco ASR 1006 Router and Cisco ASR 1004 Router do not support the Cisco ASR1000-ESP5. When performing upgrades, the Cisco ASR1000-ESP10, Cisco ASR1000-ESP20, and any future ESPs can be upgraded.

Note Do not have different embedded services processors operating in the same chassis. The only time this condition occurs is when you are performing an upgrade.

The Cisco ASR1000-ESP100-X and Cisco ASR1000-ESP200-X are QFP-based embedded services processor for the Cisco ASR1000 Series Routers and are based on third generation QFP ASIC.

The Cisco ASR 1000 Series Routers support the following Cisco ASR 1000 Series Embedded Services Processors:

- Cisco ASR 1000-ESP5, on page 74
- Cisco ASR 1000-ESP10, on page 75
- Cisco ASR 1000-ESP20, on page 75
- Cisco ASR 1000-ESP40, on page 75
- Cisco ASR 1000-ESP100, on page 76
- Cisco ASR 1000-ESP200, on page 76
- Cisco ASR1000-ESP100-X, on page 77
- Cisco ASR1000-ESP200-X, on page 78
- Features of the Cisco ASR 1000 Series Embedded Services Processors, on page 79

Cisco ASR 1000-ESP5

The Cisco ASR1000-ESP5 forwarding performance will vary depending on features configured. Up to 4 Mpps for the combination of the following commonly-used features: IPv4 forwarding, IP Multicast, ACL, QoS, Reverse Path Forwarding (RPF), load balancing, and Sampled NetFlow.

Cisco ASR 1000-ESP10

The encryption capability of the 10 Gbps ESP is rated for 4 Gbps whereas the 5 Gbps ESP is rated for 1.8 Gbps and the 2.5 Gbps ESP is rated for 1.0 Gbps. The ASR1000-ESP10-N has the same performance characteristics as the ASR1000-ESP10 but does not support encryption services.

The Cisco ASR1000-ESP10 supports the following forwarding engines:

- Cisco ASR1002-ESP-F
- Cisco ASR1000-ESP10
- Cisco ASR1000-ESP10-N—The Cisco ASR1000 Embedded Services Processor 10G Non Crypto Capable board provides an ASR 1000 series router solution for customers who are under export restrictions and not qualified to implement products that support strong encryption services. The Cisco ASR1000 Embedded Services Processor 10G Non Crypto Capable feature support is the same as the Cisco ASR100-ESP10 except that SSH, SSL and IPSec VPN services are not supported. For detailed information about this feature, see Cisco ASR 1000 Series Aggregation Services Routers Software Configuration Guide and Cisco ASR 1000 Embedded Services Processor 10G Non Crypto Capable Feature Guide.

The ASR1000-ESP10-N has the same performance characteristics as the ASR1000-ESP10 but does not support encryption services.

Cisco ASR 1000-ESP20

Cisco ASR 1000-ESP20 supports the Cisco ASR 1006 Router and ASR 1004 Router. Performance highlights of the Cisco ASR1000-ESP20 include hardware-assisted policing, encryption capability of 8 Gbps, and special jitter- and latency-minimizing multicast packet replication.

Cisco ASR 1000-ESP20 supports 1Gb Cisco QuantumFlow Processor, 4Gb DRAM, 40Mb TCAM, and 256Mb packet buffer memory and high availability 1 + 1 redundancy in dual ESP configuration in combination with the Cisco ASR 1006 Router.

Cisco ASR 1000-ESP40

Cisco ASR1000-ESP40 is a field-replaceable unit (FRU) capable of supporting online insertion and removal (OIR) operation in conjunction with one or two route processors, a secondary forwarding processor, and up to six SPA carrier cards.

Cisco ASR 1000-ESP40 is a CPP-based forwarding processor for the Cisco ASR1000 Series Routers. Cisco ASR 1000-ESP40 is supported on the following routers:

- Cisco ASR 1006
- Cisco ASR 1004
- Cisco ASR 101
- Cisco ASR 1006-X
- Cisco ASR 1009-X

The Cisco ASR1000-ESP40G supports:

- ESI (enhanced serial interface) punt path support for dual redundant ASR 1000 route processors with a bandwidth of 11 Gbps

- ESI state path support for redundant ASR 1000 forward processors
- Dual ESI support for four carrier cards (in slots 0 though 3) and single ESI support for two carrier cards (in slots 4 and 5).
- Total bandwidth or throughput of 40 Gbps

It provides 40 Gbps bandwidth per system and at least 10 Gbps aggregated security traffic.

All initial Cisco ASR 1000 Series Embedded Services Processors are based on a common highly-programmable network Cisco QuantumFlow Processor (packet processing). The Cisco ASR 1013 Router slots are keyed using rotated guide pins so that plug-in cards can only be fully inserted in slots where they are intended to operate. This keying prevents cards from making midplane contact in slots the cards are not allowed.

Cisco ASR 1000-ESP100

Cisco ASR1000-ESP100 is a CPP-based embedded services processor for the Cisco ASR1000 Series Routers. It is a field-replaceable unit (FRU), and it is capable of supporting online insertion and removal (OIR) operations in conjunction with one or two route processors, a secondary embedded services processor, and up to six SPA carrier cards.

Cisco ASR 1000-ESP100 is supported on the following routers:

- Cisco ASR 1006
- Cisco ASR 1013
- Cisco ASR 1006-X
- Cisco ASR 1009-X

Cisco ASR1000-ESP100 provides the following features:

- 24 configurable ESI links for SPA Carrier Card and native Line Card support:
  - ESI links support with a bandwidth of up to 46 Gbps for the Cisco ASR 1013 Router on Sip slots 0,1,4, and 5.
  - ESI links support with a bandwidth of up to 110 Gbps for the Cisco ASR 1013 Router on Sip slots 2 and 3.
- ESI punt path support for dual redundant ASR 1000 route processors with a bandwidth of 11 Gbps
- ESI state path support for redundant ASR 1000 forward processors

It can support at least 20 Gbps of aggregated security traffic.

All Cisco ASR 1000 Series embedded services processors are based on a common highly-programmable network Cisco QuantumFlow Processor (packet processing). The Cisco ASR 1013 Router slots are keyed using rotated guide pins so that plug-in cards can only be fully inserted in slots where they are intended to operate. This keying prevents cards from making midplane contact in slots the cards are not allowed.

Cisco ASR 1000-ESP200

Cisco ASR1000-ESP200 is a CPP-based embedded services processor for the Cisco ASR1000 Series Routers. It is a field-replaceable unit (FRU), and it is capable of supporting online insertion and removal (OIR) operations in conjunction with one or two route processors, a secondary embedded services processor, and up to six SPA carrier cards.

Cisco ASR 1000-ESP200 is supported on the Cisco ASR 1013 Router and Cisco ASR 1009-X router.

Cisco ASR1000-ESP200 provides the following features:

- 24 configurable ESI links for SPA Carrier Card and native Line Card support:
  - ESI links support with a bandwidth of up to 46 Gbps for the Cisco ASR 1013 Router on Sip slots 0,1,4, and 5.
  - ESI links support with a bandwidth of up to 110 Gbps for the Cisco ASR 1013 Router on Sip slots 2 and 3.

It can support at least 40 Gbps of aggregated security traffic.

All Cisco ASR 1000 Series embedded services processors are based on a common highly-programmable network Cisco QuantumFlow Processor (packet processing). The Cisco ASR 1013 Router slots are keyed using rotated guide pins so that plug-in cards can only be fully inserted in slots where they are intended to operate. This keying prevents cards from making midplane contact in slots the cards are not allowed.

Cisco ASR 1000-ESP200 and Second Generation Cisco QFP

Each Cisco ASR 1000-ESP200 uses 4 third generation Cisco QFPs (QFP-2nd-Gen) Application Specific Integrated Circuits (ASICs) to achieve maximum performance. Each QFP-2nd-Gen ASIC is mapped with a subset of SPA bays and interfaces (SIP). Through this mapping, the Cisco ASR 1000-ESP200 can perform all baseline packet routing operations such as Quality of Service (QoS) classification and IP multicasting. They can also perform Network Address Translation (NAT) tasks.

1	Egress queueing for interfaces handled by QFP-2nd-Gen 3	3	Egress queueing for interfaces handled by QFP-2nd-Gen 1
2	Egress queueing for interfaces handled by QFP-2nd-Gen 2	4	Egress queueing for interfaces handled by QFP-2nd-Gen 0

Implications of SIP and SPA Slot Mapping

Interfaces and sessions that have an egress QoS have their schedules and queues present in the QFP-3rd-Gen ASIC that services the particular slot. Since there is a limitation of 29000 schedules and 116000 queues per QFP-3rd-Gen ASIC, multiple QFP-3rd-Gen ASICs should be targeted by placing the SIP and SPA in the correct order, in order to achieve full system scalability for schedules and queues.

For example, A 5xGE SPA supports more than 32000 point-to-point protocol (PPP) sessions depending on the ESP. However, if QoS is applied to these sessions, the QFP-3rd-Gen ASIC that supports the SIP and SPA slot can support only 29000 schedules, and these sessions share the 116000 queue limit. To support PPP sessions with QoS that are greater than 29000, a different SIP and SPA should be used to map to a different QFP-3rd-Gen ASIC. This will enable additional schedules and queues.

Cisco ASR1000-ESP100-X

Cisco ASR1000-ESP100-X is a QFP-based embedded services processor for the Cisco ASR1000 Series Routers. This ESP is based on third generation QFP ASIC. The ASR1000-ESP100X contains one, third generation QFP ASIC, built-in crypto module providing improved, higher bandwidth and crypto support. Additionally it also supports smart licensing and soft enforcement.

Cisco ASR1000-ESP100-X is supported on the following routers:

- Cisco ASR 1013 Router
- Cisco ASR 1006-X and
- Cisco ASR 1009-X

The following table describes the ESI capacity for each of the SIP slots:

Table 36: ESI capacity for SIP slots on ASR1000-ESP100-X

	0	1	2	3	4	5
ASR 1006-X	1x100G	1x100G	-	-	-	-
ASR 1009-X	1x100G	1x100G	1x100G	-	-	-
ASR 1013	1x40G	1x40G	1x100G	1x100G	1x40G	1x40G

Cisco ASR1000-ESP100-X provides the following features.

- ESI punt path support for dual redundant ASR 1000 route processors with a bandwidth of 11 Gbps.
- ESI state path support for redundant ASR 1000 forward processors

Cisco ASR1000-ESP200-X

Cisco ASR1000-ESP200-X is a QFP-based embedded services processor for the Cisco ASR1000 Series Routers. This ESP is based on third generation QFP ASIC. The ASR1000-ESP200-X contains two, third generation QFP ASIC that provides 64-bit resource memory, built-in crypto module providing improved, higher bandwidth crypto support therefore leading to improved throughput and scalability. Additionally this ESP also supports smart licensing and soft enforcement.

Cisco ASR1000-ESP200-X is supported on the following routers:

- Cisco ASR 1006-X and
- Cisco ASR 1009-X

Figure 24: Cisco ASR1000-ESP200-X Faceplate



The following table describes the ESI capacity for each of the SIP slots:

Table 37: ESI capacity for SIP slots on ESP-100X

	0	1	2	3	4	5
ASR 1006-X	1x100G	1x100G	-	-	-	-
ASR 1009-X	1x100G	1x100G	1x100G	-	-	-

Features of the Cisco ASR 1000 Series Embedded Services Processors

The following table summarizes the features of the embedded services processors.

Table 38: Differences in Cisco ASR 1000 Series Embedded Services Processors

Embedded Services Processor	Memory	Performance	Bandwidth	Security Traffic Performance
Cisco ASR1000-ESP5	256MB Cisco QuantumFlow Processor, 5Mb TCAM, 64 MB packet buffer, and 1 GB FECP DRAM	4 Mpps for the combination of the following commonly-used features: IPv4 forwarding, IP Multicast, ACL, QoS, Reverse Path Forwarding (RPF), load balancing, and Sampled NetFlow	5 Gbps	1 Gbps
Cisco ASR1000-ESP10	512MB Cisco QuantumFlow Processor, 10Mb TCAM, and 128MB packet buffer, and 2 GB FECP DRAM	8 Mpps forwarding for the combination of the following commonly-used features: IPv4 forwarding, IP Multicast, ACL, QoS, Reverse Path Forwarding (RPF), load balancing, and Sampled NetFlow	10 Gbps	3 Gbps
Cisco ASR1000-ESP20	1 GB Cisco QuantumFlow Processor, 40Mb TCAM, 256 MB packet buffer, 4 GB FECP DRAM	16 Mpps forwarding for the combination of the following commonly-used features: IPv4 forwarding, IP Multicast, ACL, QoS, Reverse Path Forwarding (RPF), load balancing, and Sampled NetFlow	20 Gbps	8 Gbps
Cisco ASR1002-ESP-F	Same as Cisco ASR 1002 Router	Same as the Cisco ASR 1002 router except where limited by constrained throughput of 2.5G	Limited to 2.5 Gbps	1 Gbps

Embedded Services Processor	Memory	Performance	Bandwidth	Security Traffic Performance
Cisco ASR1000-ESP40[1]	• 1 GB Cisco QuantumFlow Processor, 40Mb TCAM, 256MB packet buffer, 4 GB FECP DRAM • 8 GB of registered DDR2 SDRAM memory within two DIMM connectors (4 GB DIMMs)	ASR1000-ESP40 performance**	40 Gbps	12.9 Gb of aggregate security traffic

Cisco ASR1000-ESP100	• Dual Quantum Flow packet processor complex:
	  • 1 GB total packet buffer
	  • 4 GB total resource memory
	• Single 80MB TCAM4 feature lookup memory
	• 16 GB of 1066 MHz DDR3 SDRAM:
	  • Two 8GB, 2-rank registered DIMMs
			100 Gbps	20 Gbps

Cisco ASR1000-ESP200	• Quad Quantum Flow packet processor complex:
	  • 2 GB total packet buffer
	  • 8 GB total resource memory
	• Dual 80MB TCAM4 feature lookup memory
	• 32GB of 1066MHz DDR3 SDRAM:
	  • Four 8GB, 2-rank registered DIMMs
			200 Gbps	40 Gbps

[1] While both the Cisco ASR1000-ESP40 and ASR1000-ESP20 exceed the 16 Mpps forwarding rate, the ESP40 packets per second rate is slightly less than ESP20 when sending continuous stream of small, 64-byte packets. However, at 92 bytes and larger, the ASR1000-ESP40 outperforms ESP20. The difference at small packet sizes is a side-effect of optimizations made to achieve 40 Gbps for medium to large packets.

Note For unsupported hardware component configuration combinations, see xref Table 2-4.

The embedded services processor consists of a front panel label for indicator and control functions. The Cisco ASR 1000 Series Embedded Services Processor model number labeling is located next to the left card module handle. The module also contains card handles to assist in insertion or removal of the module. There are no front panel interfaces on the Cisco ASR1000-ESP modules.

The following figure displays the Cisco ASR 1000 Series Embedded Services Processor LEDS on the front panel.

Note The Cisco ASR 1000 Series embedded services processors have the same faceplate and status information except for the name label, such as Cisco ASR1000-ESP40, Cisco ASR1000-ESP20, Cisco ASR1000-ESP10, Cisco ASR1000-ESP10-N, Cisco ASR1000-ESP5, Cisco ASR1000-ESP100X and Cisco ASR1000-ESP200X.

Figure 25: Cisco ASR1000-ESP Faceplate LEDs

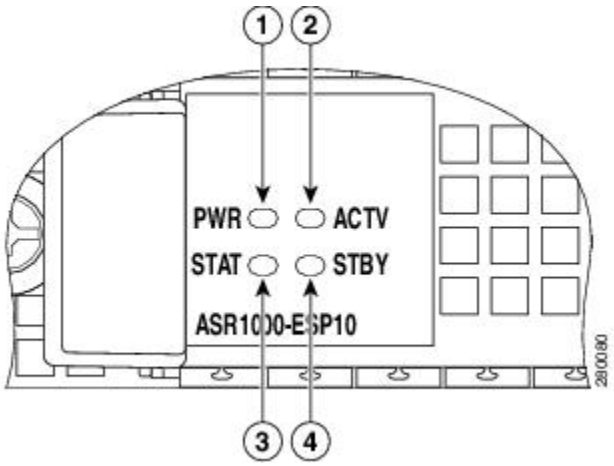

1	PWR—Power LED	3	STAT—Status LED
2	ACTV—Active LED	4	STBY—Standby LED

The following table describes the LEDs on the embedded services processors.

Table 39: LEDs on the Embedded Services Processors

LED Label	LED	Color	Behavior Description
PWR	Power	Solid green	All power requirements are within specification
		Off	The embedded services processor is not powered on.
STAT	System status	Solid green	Cisco IOS has successfully booted.

LED Label	LED	Color	Behavior Description
		Amber	ROMmon is running or when the Process Manager declares that a critical route processor process is not running.
		Red	System failure or powering up.
ACTV	Active	Green	The ACTV LED indicates (in a redundant system) the embedded services processor board that is actively forwarding packets. On the active embedded services processor board, the ACTV LED is green and the STBY LED is off. On the standby embedded services processor board, the STBY LED is yellow and the ACTV LED is off. On Cisco ASR 1002 Router, Cisco ASR 1004 Router, and Cisco ASR 1002-F Router, the embedded services processor board is always active because these routers do not support redundancy. The Cisco ASR1000-ESP5 does not support redundancy. Therefore, it is always active.
STBY	Standby	Yellow	On a redundant system, the STBY LED indicates which embedded services processor is in the standby state and is waiting to take over packet forwarding in the event that the active embedded services processor experiences a failure. The STBY LED is in the off state while the active embedded services processor is in the on state.

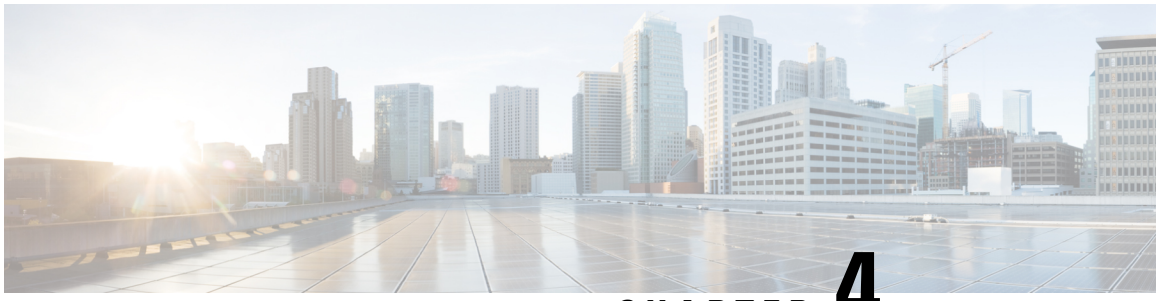

CHAPTER 4

Cisco ASR 1000 Series Router SPA Interface Processors (SIPs)

This chapter describes the Cisco ASR 1000 Series Router SPA Interface Processors supported on the Cisco ASR 1000 Series Routers.

This chapter contains the following sections:

For detailed documentation on Cisco ASR 1000 SIPs and SPAs, see:

- Cisco ASR 1000 Series Aggregation Services Routers SIP and SPA Hardware Installation Guide
- Cisco ASR 1000 Series Aggregation Services Routers SIP and SPA Software Configuration Guide

Note Throughout this document, the term slot refers to the Cisco ASR 1000 Series Router chassis slot. The Cisco ASR 1000 Series Route Processor, Cisco ASR 1000 Series Embedded Services Processor, and Cisco ASR 1000 Series SPA Interface Processor (SIP), and power supplies plug into these slots. Shared port adapters plug into SIP bays.

- Cisco ASR 1000 Series SPA Interface Processor, on page 83
- SPA Interface Processor Slot Numbering, on page 86

Cisco ASR 1000 Series SPA Interface Processor

This section describes the Cisco SPA interface processors for the Cisco ASR 1006, Cisco ASR 1004, Cisco ASR 1002, and Cisco ASR 1013 routers. The Cisco ASR 1000 Series Routers support the following Cisco ASR 1000-SIPs:

- Cisco ASR 1000-SIP10—This SIP supports:
  - 4 half height (¼ Rate or full rate or combination) SPAs with up to 16 ports per SPA
  - 2 full height (¼ Rate or full rate or combination) SPAs with up to 32 ports per SPA
  - 2 half height and 1 full height comb in at on that does not exceed 64 ports
  - Up to 10 Gbps of oversubscription

- Cisco ASR 1000-SIP40—This SIP supports:
  - 4 half height (¼ Rate or full rate or combination) SPAs with up to 24 ports per SPA
  - 2 full height (¼ Rate or full rate or combination) SPAs with up to 48 ports per SPA
  - 2 half height and 1 full height combination that does not exceed 96 ports
  - Up to 40 Gbps aggregate bandwidth from the four SPA bays
  - ESI bandwidth of 11 to 46 Gbps
  - Ingress buffering at 128 MB and egress buffering at 6MB

For information about what hardware is supported and compatible and not compatible with the new ASR 1000 40G components and Cisco ASR 1013 Router, see Table 2-4 and Table 2-3 .

The Cisco SPAs provide the physical interfaces for router connectivity ranging from copper, channelized, POS, ATM and Ethernet. The Cisco ASR 1000 Series SIP provides the physical termination for the SPAs and accepts up to four half-height and 2 full height Cisco SPAs.

The is a list of characteristics of the Cisco ASR 1000 Series SPA Interface Processors for the Cisco ASR 1006, Cisco ASR 1004, and Cisco ASR 1013 routers:

- A SIP is a carrier card that inserts into a router slot like a line card. It provides no network connectivity on its own.
- A SIP contains one or more subslots, which are used to house one or more SPAs. The SPA provides interface ports for network connectivity.
- During normal operation, the SIP should reside in the router fully populated either with functional SPAs in all subslots, or with a blank filler plate (SPA-BLANK=) inserted in all empty subslots.
- SIPs support online insertion and removal (OIR) with SPAs inserted in their subslots. SPAs also support OIR and can be inserted or removed independently from the SIP.

Note Fully populate all slots and subslots with blank filler plates or functional SPAs for maximum efficiency of the cooling system.

This section describes the Cisco ASR 1000 Series SPA Interface (SIP) components and subslot identification.Figure 4-1 shows an example of the Cisco ASR 1000 Series SPA Interface (SIP) module.

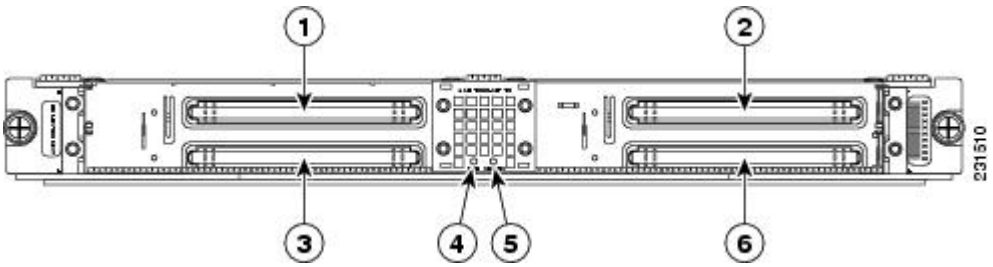

1	SPA subslot 0	4	STATUS Led

2	SPA subslot 1	5	PWR Led
3	SPA subslot 2	6	SPA subslot 3

Figure 26: Cisco ASR1000-SIP10 SPA Interface Processor, on page 85 shows the LEDs on the Cisco ASR1000-SIP10.

Figure 26: Cisco ASR1000-SIP10 SPA Interface Processor

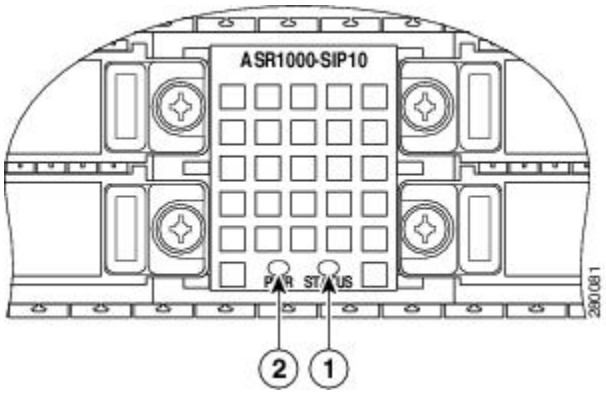

1	STATUS LED	2	PWR LED

Table 40: Cisco ASR1000-SIP LEDs , on page 85 describes the Cisco ASR1000-SIP10 and Cisco ASR1000-SIP40 LEDs on the front panel.

Table 40: Cisco ASR1000-SIP LEDs

LED Label	LED	Color	Behavior Description
PWR	Power	Solid green	Cisco ASR 1000 Series SIP is powered on and all power supplies are within their tolerances
		Off	Cisco ASR 1000 Series SIP is powered off
STATUS	System status	Red	The Cisco ASR 1000 Series SPA Interface Processor has encountered an error
		Yellow	Lit when the Cisco ASR 1000 Series SIP is loading
		Solid green	The SPA drivers have started and are running and all critical processes are running (as determined by the Cisco ASR 1000 Series SPA Interface (SIP) Process Manager).

The Cisco ASR1002-SIP10 supports a built-in 4xGE SPA and three half-height SPAs (one half-height and one full-height SPA). The Cisco ASR1002-SIP10 also functions as the base board for the Cisco embedded ASR1000-RP1. The Cisco 1002 Router has one slot for FP0 with three subslots for SPAs, subslots 1 - 3.

SPA Interface Processor Slot Numbering

A shared port adapter is a modular type of port adapter that inserts into a subslot of a compatible SIP to provide network connectivity and increased interface port density. The Cisco ASR 1000 Series SPA Interface Processor (SIP) provides an aggregation function for SPAs.

Cisco ASR 1006 Router and Cisco ASR 1004 Router

In the Cisco ASR 1006 Router and Cisco ASR 1004 Router, the SIP supports:

- Four half-height (¼ rate or full rate or combination)
- Two full-height (¼ rate or full rate or combination) SPAs with up to 32 ports per SPA
- Two half-height and 1 full-height combination that does not exceed 64 ports

The slot numbering for the SPAs in the Cisco ASR 1004 Router is the same as in the Cisco ASR 1006 Router.

Figure 4-3 shows the slot numbering for the shared port adapters on the Cisco ASR 1000 Series SPA Interface for the Cisco ASR 1006 Router and Cisco ASR 1004 Router.

Figure 27: Cisco ASR 1004 Router and Cisco ASR 1006 Router SPA Interface Subslot Numbering

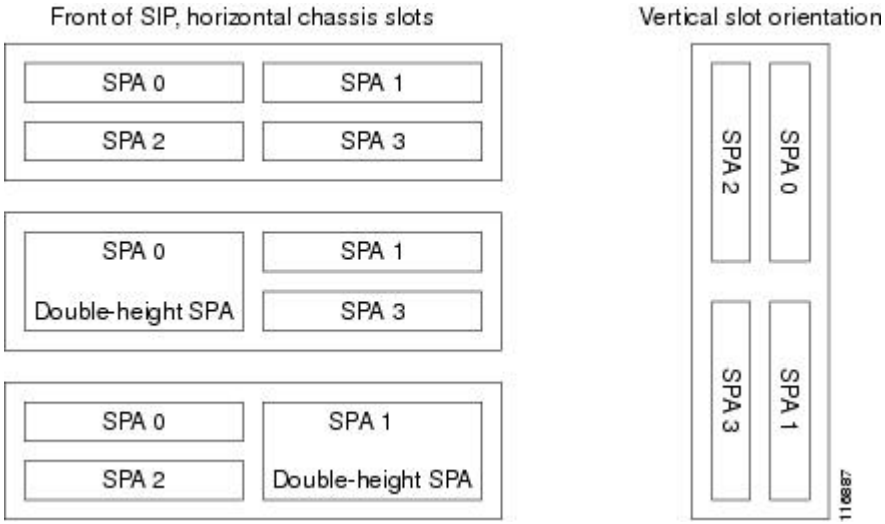

Note The slot numbering for the SPAs on the Cisco ASR 1004 Router is the same as the numbering on the Cisco ASR 1006 Router.

Cisco ASR 1002 Router

In the Cisco ASR 1002 Router, the Cisco ASR1002-SIP10 supports:

- Three removable half-height SPAs on Bay 1, 2, and 3

- The fourth SPA is a built-in 4xGE SPA on Bay 0 located on the Cisco ASR 1000 Series RP1

Note The shared port adapters on the Cisco ASR1002-SIP10 support online insertion and removal. However, the Cisco ASR1002-SIP10 in the Cisco ASR 1002 Router is built into the chassis and is not a field-replaceable unit and does not support online insertion and removal.Figure 28: Cisco ASR1002-SIP10 Interface Subslot Numbering, on page 87 shows the slot numbering for the shared port adapters on the Cisco ASR 1000 Series SPA Interface for the Cisco ASR 1002 Router.

Figure 28: Cisco ASR1002-SIP10 Interface Subslot Numbering

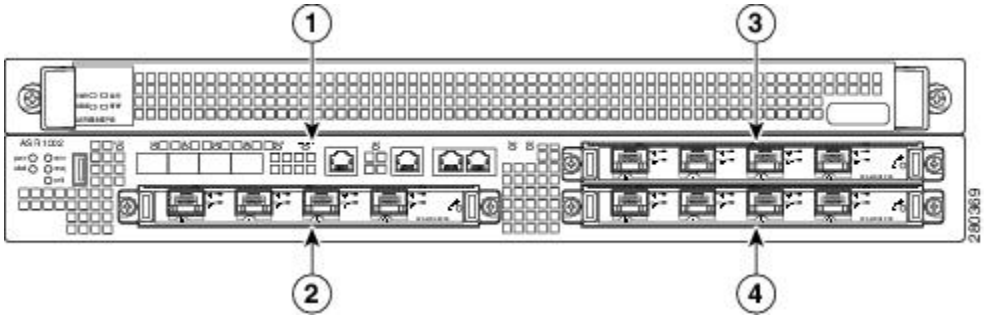

1	Cisco integrated ASR1000-RP1 subslot 0	3	SPA subslot 1
2	SPA subslot 2	4	SPA subslot 3

The Cisco integrated ASR1000-SIP10 (in the Cisco ASR 1002 Router) supports one built-in 4xGE SPA and three half height SPAs in any one of the following configurations:

- Built-in 4xGE SPA in bay 0 and three half height SPAs in bay 1, 2, 3.
- Built-in 4xGE SPA in bay 0, one half height SPA in bay 2, and one full height SPA in bay 1.

The Cisco ASR 1000 Series SPA interface processor houses SPA bay 2 and SPA bay 3. SPA bay 0 and SPA bay 1 are physically located on Cisco integrated ASR1000-RP1. A portion of the Cisco integrated ASR1000-RP1 is reserved to provide connectivity between SPA bay 1 and the Cisco integrated ASR1000-SIP10.

Note The integrated Cisco ASR1000-RP1 subslot 1 must communicate to subslot 3 of the integrated SIP when running a full height SPA in subslot 1.

Cisco ASR 1002-F Router

In the Cisco ASR 1002-F Router, the Cisco ASR1002-SIP10-F supports:

- Three removable half-height SPAs in Bays 1, 2, and 3
- The fourth SPA is a built-in 4xGE SPA on Bay 0 located on the Cisco ASR 1000 Series RP1

Note The shared port adapter on the Cisco ASR1002-SIP10-F supports online insertion and removal. However, the Cisco ASR1002-SIP10-F in the Cisco ASR 1002-F Router is built into the chassis and is not a field-replaceable unit.

Figure 4-5 shows the slot numbering for the Cisco ASR 1002-F Router.

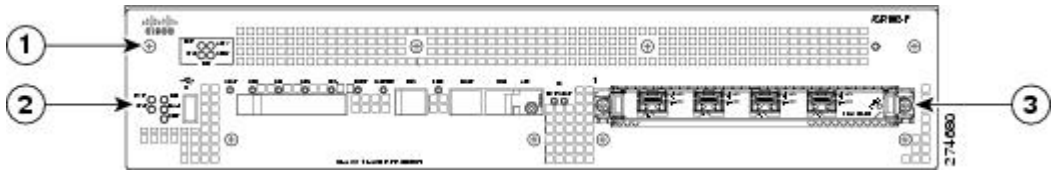

1	Cisco integrated ASR1002-ESP-F, slot F0	3	ASR1002-SIP-10-F, slot 0: SPAs: slot 0, subslot 0 - 4xGE-BUILT-IN slot 0, subslot 1 - SPA-2XOC3-POS
2	Cisco integrated RP, slot R0		

Cisco ASR 1013 Router

In the Cisco ASR 1013 Router, the Cisco ASR1000-SIP40 supports:

- Four half-height (¼ Rate or full rate or combination) SPAs with up to 24 ports per SPA
- Two full-height (¼ Rate or full rate or combination) SPAs with up to 48 ports per SPA
- Two half-height and 1 full-height combination that does not exceed 96 ports

The Cisco ASR 1013 Router uses the same SPA subslot numbering as the Cisco ASR 1006 and Cisco ASR 1004 routers.

With ESP100 and ESP200, the MIP operates at 100 Gbps in slot 2 and slot 3. The MIP operates at 40 Gbps in slots 0, 1, 4, or 5.

The following figure shows the slot numbering for the shared port adapters on the Cisco ASR 1013 Router.

Figure 29: Cisco ASR 1013 Router Slot Numbering

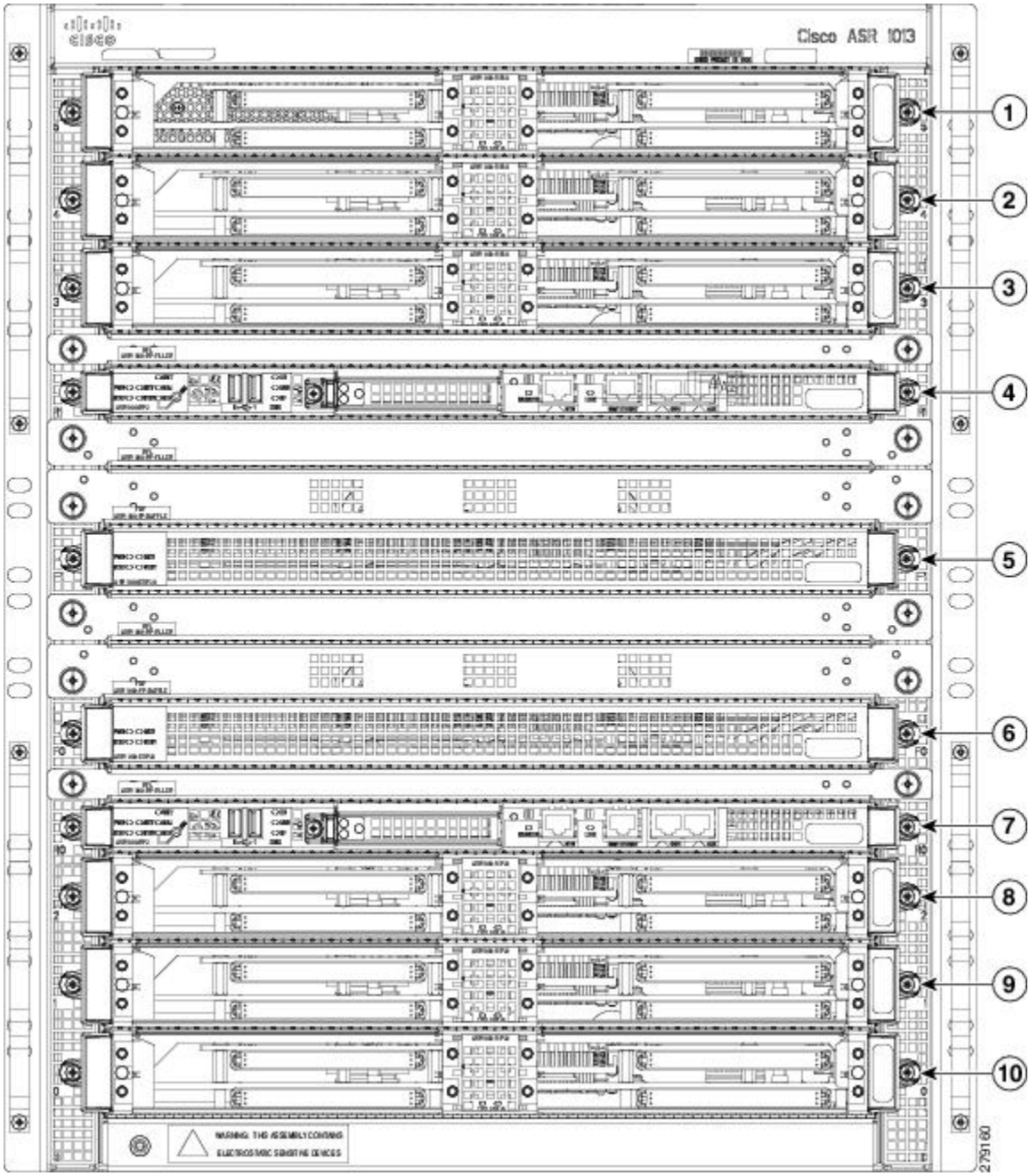

1	ASR 1000 Series SIP slot 5	6	Slot F0 with ASR 1000 Series ESP-40
2	ASR 1000 Series SIP slot 4	7	Slot R0 with ASR 1000 Series RP2
3	ASR 1000 Series SIP slot 3	8	ASR 1000 Series SIP slot 2
4	Slot R1 with ASR 1000 Series RP2	9	ASR 1000 Series SIP slot 1

5	Slot F1 with ASR 1000 Series ESP-40	10	ASR 1000 Series SIP slot 0

Note Slots 10, 9, 8, 7, and 6 reside in Zone 0 and slots 5, 4, 3, 2, and 1 reside in Zone 1.

For detailed information about specifying SIP subslot location for a SPA and specifying slot location for a SIP, see *Cisco Aggregation Services Router 1000 Series SIP and SPA Software Configuration Guide* .

Cisco ASR 1001 Router

In the Cisco ASR 1001 Router, the Cisco ASR1000-SIP10 supports:

- One flexible integrated daughter card I/O slot
- One half-height SPA bay

Figure 30: Cisco ASR 1001 Router Slot Numbering , on page 90 shows slot numbering on the Cisco ASR 1001 Router.

Figure 30: Cisco ASR 1001 Router Slot Numbering

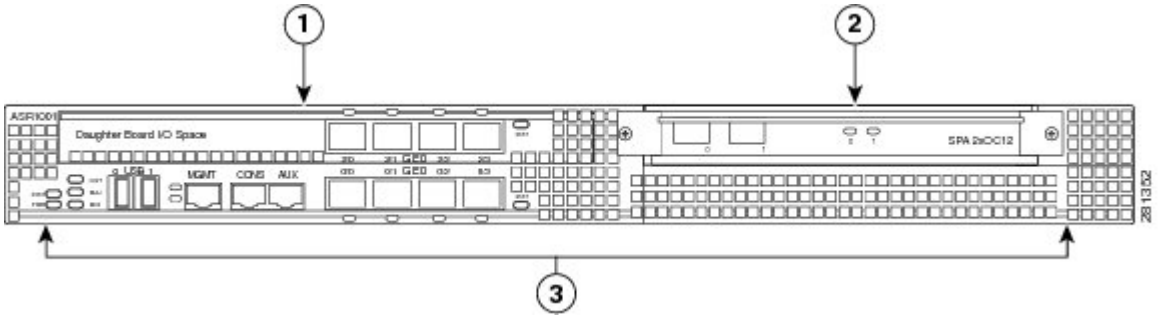

1	Slot 2 connected to the flexible integrated daughter card	3	Slot 0 connected to the built-in 4x1GE SPA on the mainboard
2	Slot 1 connected to the half-height SPA slot	—	—

Cisco ASR 1002-X Router

In the Cisco ASR 1002-X Router, the integrated SIP supports:

- Three removable half-height SPAs in Bays 1, 2, and 3
- A built-in 6xGE SPA

Note The SPAs on the Cisco ASR1002-X support online insertion and removal. However, the SIP on the Cisco ASR 1002-X Router is built into the chassis and is not a field-replaceable unit.

Figure 4-8 shows the slot numbering for the Cisco ASR 1002-X Router.

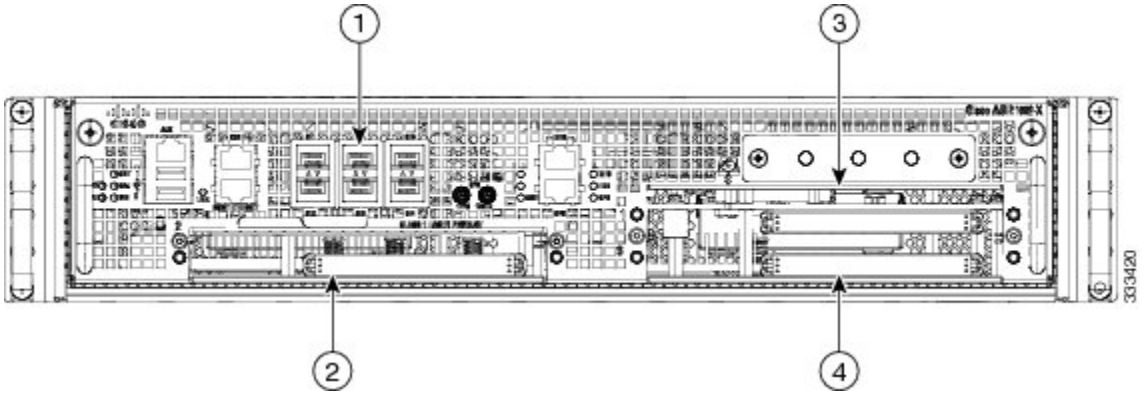

1	6xGE Built-in SPA in Subslot 0	3	Cisco SPA subslot 1
2	Cisco SPA subslot 2	4	Cisco SPA subslot 3

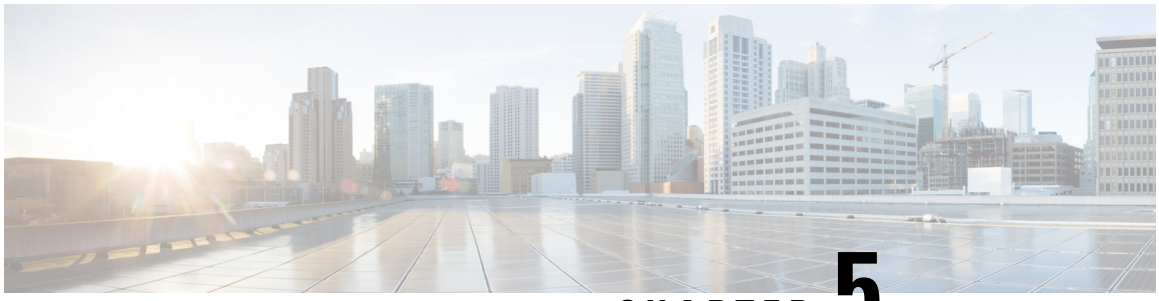

CHAPTER 5

Preparing Your Site for Installation

This chapter contains important safety information you should know before working with the Cisco ASR 1000 Series Aggregation Services Routers and guides you through the process of preparing your site for router installation.

This chapter contains the following sections:

- Prerequisites and Preparation , on page 93
- Safety Guidelines , on page 94
- Compliance Requirements, on page 95
- Cautions and Regulatory Compliance Statements for NEBS , on page 96
- Standard Warning Statements, on page 96
- Site Planning, on page 100
- Preventing Electrostatic Discharge Damage, on page 110
- Electrical Safety, on page 111
- Receiving the Cisco ASR 1000 Series Router, on page 112
- Chassis-Lifting Guidelines, on page 113
- Tools and Equipment, on page 113
- Checking the Shipping Container Contents, on page 114
- Cisco ASR 1000 Series Router Installation Checklist, on page 115

Prerequisites and Preparation

Before you perform any of the procedures in this guide, we recommend that you:

- Read the safety guidelines in the next section and review the electrical safety and ESD-prevention guidelines in this guide.
- Ensure that you have all of the necessary tools and equipment (see Tools and Equipment, on page 113).
- Have access to the *Cisco ASR 1000 Series Aggregation Services Routers Software Configuration Guide* (an online document that is available for viewing or download at Cisco.com) during the installation.
- The power and cabling requirements that must be in place at your installation site
- The equipment required to install the router
- The environmental conditions your installation site must meet to maintain normal operation

Before installing your Cisco ASR 1000 Series Aggregation Services Router, you must consider power and cabling requirements that must be in place at your installation site, special equipment for installing the router,

and the environmental conditions your installation site must meet to maintain normal operation. This chapter guides you through the process of preparing for router installation.

The shipping package for the router is engineered to reduce the chances of product damage associated with routine material handling experienced during shipment:

- Router should always be transported or stored in its shipping package in the upright position.
- Keep the router in the shipping container until you have determined the installation site.



Note Inspect all items for shipping damage. If an item appears damaged, contact a Cisco customer service representative immediately.

Safety Guidelines

Before you begin the installation or replacement procedure, review the safety guidelines in this section to avoid injuring yourself or damaging the equipment.



Note This section contains guidelines and do not include every potentially hazardous situation. When you install a router, always use common sense and caution.

Safety Warnings

Safety warnings appear throughout this publication in procedures that, if performed incorrectly, might harm you. A warning symbol precedes each warning statement.

Before you install, configure, or perform maintenance on the router, review the documentation for the procedure you are about to perform, paying special attention to the safety warnings. If you need translations of the safety warnings.



Note Do not unpack the system until you are ready to install it. Keep the chassis in the shipping container to prevent accidental damage until you determined an installation site. Use the appropriate unpacking documentation included with the system.

Read the installation instructions in this document before you connect the system to its power source. Failure to read and follow these guidelines could lead to an unsuccessful installation and possibly damage to the system and components.

Safety Recommendations

The following guidelines will help to ensure your own safety and protect your Cisco equipment. This list does not cover all potentially hazardous situations, so *be alert* .

- Cisco safety policy is that all of its routers must conform to the requirements of IEC 60950, with appropriate national deviations, as a minimum. In addition, Cisco routers must also meet the requirements of any other normative documents (for example, standards, technical specifications, laws or regulations).
- Review the safety warnings listed in the *Regulatory Compliance and Safety Information for the Cisco ASR 1000 Series Aggregation Services Routers* that accompanied your Cisco ASR 1000 Series Router, before installing, configuring, or maintaining the router.
- Never attempt to lift an object that might be too heavy for you to lift by yourself.
- Always turn all power supplies off and unplug all power cables before opening the chassis.
- Always unplug the power cable before installing or removing a chassis.
- Keep the chassis area clear and dust free during and after installation.
- Keep tools and chassis components away from walk areas.
- Do not wear loose clothing, jewelry (including rings and chains), or other items that could get caught in the chassis. Fasten your tie or scarf and sleeves.
- The Cisco ASR 1000 Series Routers operate safely when it is used in accordance with its marked electrical ratings and product usage instructions.

Compliance Requirements

This section includes Safety Compliance and Network Equipment Building Systems (NEBS) standards. The Cisco ASR 1000 Series Routers are in compliance with national and international standards as described in the following table.

You must observe the following safety guidelines when working with any equipment that connects to electrical power or telephone wiring. These guidelines help you avoid injuring yourself or damaging the devices.

Table 41: Compliance Requirements

Safety Compliance and NEBS Requirements	
Specification	Description
Safety	**Caution** To comply with Class A emissions requirements, shielded-twisted pair T1/E1 cables must be used with the 8-port channelized T1/E1 SPA interface in any Cisco ASR 1000 chassis.
Telcordia NEBS GR-1089-Core Statement	**Caution** To comply with the Telcordia GR-1089 NEBS standard for electromagnetic compatibility and safety, for Ethernet RJ-45 ports, use only shielded Ethernet cables that are grounded on both ends. In a NEBS installation, all Ethernet ports are limited to intrabuilding wiring.
	GR-1089
	GR-63

Cautions and Regulatory Compliance Statements for NEBS

The following table lists cautions, regulatory compliance statements, and requirements for the Network Equipment-Building System (NEBS) certification from the Telcordia Electromagnetic Compatibility and Electrical Safety – Generic Criteria for Network Telecommunications Equipment (A Module of LSSGR, FR-64; TSGR, FR-440; and NEBSFR, FR-2063) Telcordia Technologies Generic Requirements, GR-1089-CORE.

Attach an ESD-preventive wrist strap to your wrist and to a bare metal surface.

Caution To comply with the Telcordia GR-1089 NEBS standard for electromagnetic compatibility and safety, for Ethernet RJ-45 ports, use only shielded Ethernet cables that are grounded on both ends. In a NEBS installation, all Ethernet ports are limited to intrabuilding wiring.

Caution The intrabuilding ports of the equipment or subassembly is only suitable for connection to intrabuilding or unexposed wiring or cabling. The intrabuilding ports of the equipment or subassembly MUST NOT be metallically connected to interfaces that connect to the OSP or its wiring. These interfaces are designed for use only as intrabuilding interfaces (Type 2 or Type 4 ports as described in GR-1089-CORE), and require isolation from the exposed OSP cabling. The addition of primary protectors is not sufficient protection in order to connect these interfaces metallically to OSP wiring.

Products that have an AC power connection are intended for deployments where an external surge protective device (SPD) is used at the AC power service equipment as defined by the National Electric Code (NEC).

This product is designed for a common bonding network (CBN) installation.

This product can be installed in a network telecommunication facility or location where the NEC applies.

An electrical conducting path shall exist between the product chassis and the metal surface of the enclosure or rack in which it is mounted or to a grounding conductor. Electrical continuity shall be provided by using thread-forming type mounting screws that remove any paint or nonconductive coatings and establish a metal-to-metal contact. Any paint or other nonconductive coatings shall be removed on the surfaces between the mounting hardware and the enclosure or rack. The surfaces shall be cleaned and an antioxidant applied before installation.

The grounding architecture of this product is DC-isolated (DC-I).

DC-powered products have a nominal operating DC voltage of 48 VDC. Minimal steady state DC operating voltage is 40.5 VDC. Reference American National Standards Institute (ANSI) T1.315, Table 1.

Standard Warning Statements

This section describes the warning definition and then lists core safety warnings grouped by topic.

Warning This warning symbol means danger. You are in a situation that could cause bodily injury. Before you work on any equipment, be aware of the hazards involved with electrical circuitry and be familiar with standard practices for preventing accidents. Use the statement number provided at the end of each warning to locate its translation in the translated safety warnings that accompanied this device.

Note: SAVE THESE INSTRUCTIONS Statement 1071

General Safety Warnings

Warning Read the installation instructions before you connect the system to its power source. Statement 1004

Warning Ultimate disposal of this product should be handled according to all national laws and regulations. Statement 1040

Warning No user-serviceable parts inside Do not open. Statement 1040

Warning Installation of the equipment must comply with local and national electrical codes. Statement 1074

Warning To comply with the Class A emissions requirements shielded twisted pair T1/E1 cables must be used for SPA-8-Port Channelized T1/E1 SPA (SPA-8XCHT1/E1) on the Cisco ASR 1006, ASR 1004, and ASR 1002. EN55022/CISPR22 Statement

Warning To comply with Class A emissions requirements- shielded management Ethernet, CON, and AUX cables on the Cisco ASR 1002 Router must be used.

Warning Power cable and AC adapter - When installing the product, please use the provided or designated connection cables/power cables/AC adaptors. Using any other cables or adapters could cause a malfunction or a fire. Electrical Appliance and Material Safety Law prohibits the use of certified cables (that have the ‘UL’ shown on the code) for any other electrical devices than products designated by Cisco. The use of cables that are certified by Electrical Appliance and Material Safety Law (that have ‘PSE’ shown on the code) is not limited to Cisco-designated products. Statement 371



Warning Only trained and qualified personnel should be allowed to install or replace this equipmentStatement 1030



Warning This product relies on the building's installation for short-circuit (overcurrent) protection. Ensure that the protective device is rated not greater than: AC power supplies for the Cisco ASR 1004 Router, Cisco ASR 1006 Router, and Cisco ASR 1002 Router: 120 VAC, 20A U.S. maximum. DC power supplies for the Cisco ASR 1004 Router: 40A U.S. maximum. DC power supplies for the Cisco ASR 1006 Router: 50A U.S. maximum. DC power supplies for the ASR 1002 Router: 30A U.S. maximum. Statement 1005



Warning This product requires short-circuit (overcurrent) protection to be provided as part of the building installation. Install only in accordance with national and local wiring regulations. Statement 1045



Warning This unit may have more than one power supply connection. All connections must be removed to de-energize the unit. Statement 1028



Warning This unit is intended for installation in restricted access areas. A restricted access area can be accessed only through the use of a special tool, lock and key, or other means of security. Statement 1017



Warning The plug-socket combination must be accessible at all times, because it serves as the main disconnecting device. Statement 1019



Warning Hazardous voltage or energy may be present on the DC power terminals. Always replace cover when terminals are not in service. Be sure uninsulated conductors are not accessible when cover is in place. Statement 1075



Warning Use copper conductors only. Statement 1025



Warning This equipment must be grounded. Never defeat the ground conductor or operate the equipment in the absence of a suitably installed ground conductor. Contact the appropriate electrical inspection authority or an electrician if you are uncertain that suitable grounding is available. Statement 1024



Warning Hazardous voltage or energy is present on the backplane when the system is operating. Use caution when servicing. Statement 1034

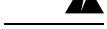

Warning Class 1 laser product. Statement 1008



Warning Class 1 LED product. Statement 1027



Warning Laser radiation is present when the system is open. Statement 1009



Warning Do not stare into the laser beam. Statement 1010



Warning Class I(CDRH) and Class 1M (IEC) laser products. Statement 1055



Warning Invisible laser radiation may be emitted from the end of the unterminated fiber cable or connector. Do not view directly with optical instruments. Viewing the laser output with certain optical instruments (for example, eye loupes, magnifiers, and microscopes) within a distance of 100 mm may pose an eye hazard. Statement 1056



Warning There is the danger of explosion if the battery is replaced incorrectly. Replace the battery only with the same or equivalent type recommended by the manufacturer. Dispose of used batteries according to the manufacturer's instructions. Statement 1015



Warning Do not touch or bridge the metal contacts on the battery. Unintentional discharge of the batteries can cause serious burns. Statement 341



Warning To prevent personal injury or damage to the chassis, never attempt to lift or tilt the chassis using the handles on modules (such as power supplies, fans, or cards); these types of handles are not designed to support the weight of the unit. Statement 1032



Warning To prevent the system from overheating, do not operate it in an area that exceeds the maximum recommended ambient temperature of: 40 degrees C. Statement 1047

Warning This equipment must be externally grounded using a customer-supplied ground wire before power is applied. Contact the appropriate electrical inspection authority or an electrician if you are uncertain that suitable grounding is available. Statement 366

Warning Blank faceplates and cover panels serve three important functions: they prevent exposure to hazardous voltages and currents inside the chassis; they contain electromagnetic interference (EMI) that might disrupt other equipment; and they direct the flow of cooling air through the chassis. Do not operate the system unless all cards, faceplates, front covers, and rear covers are in place. Statement 1029

Site Planning

This section contains site planning information, and will help you plan for the installation of the Cisco ASR 1000 Series Routers.

General Precautions

Observe the following general precautions when using and working with your Cisco ASR 1000 Series Routers.

- Keep your system components away from radiators and heat sources and do not block cooling vents.
- Do not spill food or liquids on your system components and never operate the product in a wet environment.
- Do not push any objects into the openings of your system components. Doing so can cause fire or electric shock by shorting out interior components.
- Position system cables and power supply cables carefully. Route system cables and the power supply cable and plug so that they cannot be stepped on or tripped over. Be sure that nothing else rests on your system component cables or power cable.
- Do not modify power cables or plugs. Consult a licensed electrician or your power company for site modifications. Always follow your local and national wiring rules.
- If you turn off your system, wait at least 30 seconds before turning it on again to avoid system component damage.

Site Selection Guidelines

The Cisco ASR 1000 Series Routers require specific environmental operating conditions. Temperature, humidity, altitude, and vibration can affect the performance and reliability of the router. The following sections provide specific information to help you plan for the proper operating environment.

The Cisco ASR 1000 Series Routers are designed to meet the industry EMC, safety, and environmental standards described in the *Regulatory Compliance and Safety Information for the Cisco ASR 1000 Series Aggregation Services Routers* document.

Site Environmental Requirements

Environmental monitoring in the Cisco ASR 1000 Series router protects the system and components from damage caused by excessive voltage and temperature conditions. To ensure normal operation and avoid

unnecessary maintenance, plan and prepare your site configuration *before* installation. After installation, make sure the site maintains the environmental characteristics as shown in the following table.

Table 42: Cisco ASR 1000 Series Router Environmental Tolerances

Environmental Characteristic	Minimum	Maximum
Steady State Operating	0 degree C	50 degree C (50 degrees C at 10,000 feet)
Storage	–20 degrees C	+70 degrees C
Humidity operating (noncondensing)	10%	90%
Humidity nonoperating (noncondensing)	5%	95%
Altitude operating: over allowable temperature range (0 to 50 degrees C)	–500 feet	10,000 feet
Altitude, nonoperating: over allowable temperature range	–1000 feet	50,000 feet
Thermal shock non-operating with change over time of 3 minute	–25 degrees C	+70 degrees C
Thermal Shock - Operating at 2.5 degree C per minute	0 degrees C	+50 degrees C

Physical Characteristics

Be familiar with the physical characteristics of the Cisco ASR 1000 Series Router to assist you in placing the system at the proper location.

For information regarding rack widths supported for ASR 1000 Routers, see the following sections:

19 in.— General Rack Selection Guidelines, on page 108

23 in.—Guidelines for 23 in. (Telco) Racks, on page 109

The following table shows the weight and dimensions of the Cisco ASR 1000 Series Routers.

Table 43: Physical Characteristics of Cisco ASR 1000 Series Routers

Characteristic	Cisco ASR 1001	Cisco ASR 1002, 1002-F, and 1002-X[2]	Cisco ASR 1004	Cisco ASR 1006	Cisco ASR 1013
Height	1.71 in. (43.43 mm) —1RU; rack-mount per EIA RS-310	3.47 in. (88.13 mm) —2RU; rack-mount per EIA RS-310	6.95 in. (176.53 mm)—4RU; rack-mount per EIA RS-310	10.47 in. (265.43 mm)—6RU; rack-mount per EIA RS-310	22.75 in. (57.8 cm)—13 RU
Width	17.3 in. (439.42 mm)	17.25 in. (438.15 mm)	17.25 in. (438.15 mm)	17.25 in. (438.15 mm)	17.25 in. (438.15 mm)

Characteristic	Cisco ASR 1001	Cisco ASR 1002, 1002-F, and 1002-X[2]	Cisco ASR 1004	Cisco ASR 1006	Cisco ASR 1013
Depth	22.50 in. (571.5 mm) Depth includes cable-management brackets; card and power-supply handles for mounting in a 600mm-enclosed cabinet.	20.75 in. (527.05 mm) Depth includes cable-management brackets; card and power-supply handles for mounting in a 600mm-enclosed cabinet "hardware-platform = Comment">.	22.50 in. (571.5 mm) Depth includes cable-management brackets; card and power-supply handles for mounting in a 600mm-enclosed cabinet.	22.50 in. (571.5 mm) Depth includes cable-management brackets; card and power-supply handles for mounting in a 600mm-enclosed cabinet.	22.60 in. (600.2 mm) Depth includes cable-management brackets; card and power-supply handles for mounting in a 600mm-enclosed cabinet "hardware-platform = Comment">.
Weight	• 23.30 lb (10.6 kg) (with dual AC power and integrated daughter card) • 22.70 lb (10.3 kg) (with dual DC power and integrated daughter card) • 25 lb (11.35 kg) fully loaded	• 40 lb (18.143 kg) for a fully loaded Cisco ASR 1002 Router or Cisco ASR 1002-F Router • 43.35 lb (19.662 kg) for a fully loaded Cisco ASR 1002-X Router	50 lb (22.679 kg) fully loaded	75 lb (34.019 kg) fully loaded	• Loaded with AC power supply — 184 lb (83.46 kg) • Loaded with DC power supply — 190.6 lb (86.45 kg) • Total weight with superslots — 202 lb (91.62 kg) with AC and 208.60 lb (94.61 kg) with DC

[2] Unless otherwise noted, the physical characteristics for the Cisco ASR 1002-F Router and Cisco ASR 1002-X Router remain the same as those for the Cisco ASR 1002 Router.

The following list describes additional Cisco ASR 1000 Series chassis characteristics:

- Cisco ASR 1001 Router:
  - Chassis height meets EIA-310 rack spacing 1RU (1.71 in./43.43 mm), universal rack-mount
  - Chassis width meets EIA-310 19-in. (17.3 in./439.42 mm) wide with rack brackets
  - Cable-management brackets allow a bend radius of 1.5 in. (38.1 mm) for cables
  - Ships with forward rack-mount brackets installed and an extra set included in the accessory kit
- Cisco ASR 1002 Router and Cisco ASR 1002-X Router:
  - Chassis height meets EIA-310 rack spacing 2RU (3.47 in./ 88.138 mm), universal rack-mount
  - Chassis width meets EIA-310 19-in. (17.25 in./438.15 mm) wide with rack brackets

- Cable-management brackets at the Cisco ASR 1002 Router location can hold 16 ports of STP/UTP RJ 45 cables
- Cable-management brackets allow a bend radius of 1.5 in. (38.1 mm) for cables
- Adjustable rack-mount brackets allow for a front to rear rail variance distance of 15.50 in./394 mm to 19.00 in./482.6 mm

- Cisco ASR 1004 Router:
  - Chassis height meets EIA-310 rack spacing 4RU (6.95 in./176.53 mm), universal rack-mount
  - Chassis width meets EIA-310 19-in. (17.25 in./438.15 mm) wide with rack brackets
  - Cable-management brackets at each Cisco ASR 1000 Series SPA Interface (SIP) locations can hold 16 ports of STP/UTP RJ 45 cables
  - Cable-management brackets allow a bend radius of 1.5 in. (38.1 mm) for cables
  - Adjustable rack-mount brackets allow for a front to rear rail variance distance of 15.50 in./394 mm to 19.00 in. /482.6 mm
- Cisco ASR 1006 Router:
  - Chassis height meets EIA-310 rack spacing 6RU (10.47 in./266 mm), universal rack-mount
  - Chassis width meets EIA-310 19-in. (17.25 in./438.15 mm) wide with rack brackets
  - Cable-management brackets at each Cisco ASR 1000 Series SPA Interface (SIP) locations can hold 16 ports of STP/UTP RJ 45 cables
  - Cable-management brackets allow a bend radius of 1.5 in. (38.1 mm) for cables
  - Adjustable rack-mount brackets allow for a front to rear rail variance distance of 15.50/394mm to 19.00/482.6mm
- Cisco ASR 1013 Router:
  - Chassis height meets EIA-310 rack spacing 13RU (22.8 in./579.12 mm), universal rack-mount
  - Chassis width meets EIA-310 19-in. (17.25 in./438.15 mm) wide with rack brackets
  - Cable-management brackets allow a bend radius of 1.5 in. (38.1 mm) for cables
  - Adjustable rack-mount brackets allow for a front to rear rail variance distance of 15.50/394mm to 19.00 in./482.6 mm
  - Ships with forward rack-mount brackets installed and an extra set in the accessory kit

Floor Loading Considerations

Ensure that the floor under the rack supporting the Cisco 1000 Series Routers is capable of supporting the combined weight of the rack and all other installed equipment.

To assess the weight of the fully configured Cisco 1000 Series Router respectively, refer to the table in Physical Characteristics, on page 101 section.

For additional information about floor loading requirements, consult the document *GR-63-CORE, Network Equipment Building System (NEBS) Requirements: Physical Protection* .

Site Power Guidelines

The Cisco ASR 1000 Series Routers have specific power and electrical wiring requirements. Adhering to these requirements ensures reliable operation of the system. Follow these precautions and recommendations when planning your site for the Cisco ASR 1000 Series Router:

- The redundant power option provides a second, identical power supply to ensure that power to the chassis continues uninterrupted if one power supply fails or input power on one line fails.
- In systems configured with the redundant power option, connect each of the two power supplies to a separate input power source. If you fail to do this, your system might be susceptible to total power failure due to a fault in the external wiring or a tripped circuit breaker.
- To prevent a loss of input power, be sure the total maximum load on each circuit supplying the power supplies is within the current ratings of the wiring and breakers.
- Check the power at your site before installation and periodically after installation to ensure that you are receiving clean power. Install a power conditioner if necessary.
- Provide proper grounding to avoid personal injury and damage to the equipment due to lightning striking power lines or due to power surges. The chassis ground must be attached to a central office or other interior ground system.

Caution This product requires short-circuit (overcurrent) protection, to be provided as part of the building installation. Install only in accordance with national and local wiring regulations.

Note The Cisco ASR 1000 Series Router installation must comply with all applicable codes and is approved for use with copper conductors only. The ground bond fastening hardware should be of compatible material and preclude loosening, deterioration, and electrochemical corrosion of hardware and joined material. Attachment of the chassis ground to a central office or other interior ground system must be made with an AWG #6 gauge wire, copper ground conductor at a minimum.

Electrical Circuit Requirements

Each Cisco 1000 Series Router requires a dedicated electrical circuit. If you equip it with dual power feeds, provide a separate circuit for each power supply to avoid compromising the power redundancy feature.

The Cisco ASR 1000 Series Routers can be powered by a DC or AC source. Ensure that the equipment grounding is present and observe power strip ratings. Make sure that the total ampere rating of all products plugged into the power strip does not exceed 80% of the rating.

The following table contains specifications for DC-powered systems for all Cisco ASR 1000 Series Routers.

Table 44: Cisco ASR 1000 Series Router DC Power Supply System Input Requirements

Cisco ASR 1000 Series Router DC Power Supply	System Input Rating (Amps)	Circuit Breaker Amps	AWG # Wire		
		Minimum	Maximum	Minimum	Maximum
Cisco ASR 1006	40	Always 50	Always AWG #6 wire		
Cisco ASR 1004	24	30	40	10	8
Cisco ASR 1002	16	20	30	12	10

Cisco ASR 1000 Series Router DC Power Supply	System Input Rating (Amps)	Circuit Breaker Amps	AWG # Wire		
Cisco ASR 1013	40	Always 50	Always AWG #6 wire		
Cisco ASR 1001	14	20	30	10	10
For example, the Cisco ASR 1002 Router DC power supply, with 16 Amp input rating must use an AWG #12 gauge wire for a 20 A circuit breaker and an AWG #10 gauge wire for a 30 A circuit breaker.					

Note All Cisco ASR 1000 Series Router AC power supplies require a 20 A circuit breaker.

The AC and DC power supplies for the Cisco ASR 1000 Series Routers support different types of power supply switches.

The following table lists AC and DC power supply system rating requirements for all Cisco ASR 1000 Series Routers.

Table 45: AC and DC Power Supply System Rating Specifications for the Cisco ASR 1000 Series Routers

Description	Specification
Power supply declared ratings	AC = 100-240 VAC DC = –48/ –60 VDC
Line frequency rating	50/60 Hz for AC power supplies

Site Cabling Guidelines

This section contains guidelines for wiring and cabling at your site. When preparing your site for network connections to the Cisco 1000 Series Router, consider the type of cable required for each component, and the cable limitations. Consider the distance limitations for signaling, EMI, and connector compatibility. Possible cable types are fiber, thick or thin coaxial, foil twisted-pair, or unshielded twisted-pair cabling.

Also consider any additional interface equipment you need, such as transceivers, hubs, switches, channel service units (CSUs), or data service units (DSUs).

Before you begin, read these important notes about cabling:

- The E1 interface on the Cisco 8-Port Channelized T1/E1 SPA interface uses RJ-48c receptacles for E1 (120-Ohm) cables with RJ-45 connectors. You can use all ports simultaneously. Each E1 connection supports interfaces that meet the G.703 standards. The RJ-45 connection does not require an external transceiver. The E1 ports are E1 interfaces that use 120-ohm shielded twisted-pair (STP) cables.

- Shielded cables must be used to connect to the DB-25 alarm connector on both the AC and DC power supplies in order to comply with FCC/EN55022/CISPR22 Class A emissions requirements. For information about the power supply DB-25 alarm connector and alarm LEDs, see the xref "How Cisco ASR1000-RP Alarm Monitoring Works" section on page 2-22 .

Warning Shielded T1/E1 cables must be used to comply with FCC/EN55022/CISPR22 Class A emissions requirements on the 8-port channelized T1/E1 SPA interface.

Before you install the Cisco 1000 Series Router, have all additional external equipment and cables on hand. For ordering information, contact a customer service representative.

The extent of your network and the distances between network interface connections depend in part on the following factors:

- Signal type
- Signal speed
- Transmission medium

The distance and rate limits referenced in the following sections are the IEEE-recommended maximum speeds and distances for signaling purposes. Use this information as a guideline in planning your network connections >*prior to* installing the Cisco 1000 Series Router.

If wires exceed recommended distances, or if wires pass between buildings, give special consideration to the effect of a lightning strike in your vicinity. The electromagnetic pulse caused by lightning or other high-energy phenomena can easily couple enough energy into unshielded conductors to destroy electronic devices. If you have had problems of this sort in the past, you may want to consult experts in electrical surge suppression and shielding.

Asynchronous Terminal Connections

The route processors provide a console port to connect a terminal or computer for local console access. The route processors also provide an auxiliary port for additional connections and for diagnostic use.

Both ports have RJ-45 connectors, support RS-232 asynchronous data, and have distance recommendations specified in the IEEE RS-232 standard.

Interference Considerations

When wires are run for any significant distance, there is a risk that stray signals will be induced on the wires as interference. If interference signals are strong, they can cause data errors or damage to the equipment.

The following sections describe sources of interference and how to minimize its effects on the Cisco ASR 1000 Series Router system.

Electromagnetic Interference

All equipment powered by AC current can propagate electrical energy that can cause electromagnetic interference (EMI) and possibly affect the operation of other equipment. The typical sources of EMI are equipment power cords and power service cables from electric utility companies.

Strong EMI can destroy the signal drivers and receivers in the Cisco ASR 1000 Series Router and even create an electrical hazard by causing power surges through power lines into installed equipment. These problems are rare, but could be catastrophic.

To resolve these problems, you need specialized knowledge and equipment, which could consume substantial time and money. However, you should ensure that you have a properly grounded and shielded electrical environment, paying special attention to the need for electrical surge suppression.

The following table lists electrode magnetic compliance standards for the Cisco ASR 1000 Series Routers.

Table 46: EMC Standards

EMC Standards	FCC 47 CFR Part 15 Class A
	VCCI Class A
	AS/NSZ Class A
	ICES-003 Class A
	EN55022/CISPR 22 Information Technology Equipment (Emissions)
	EN55024/CISPR 24 Information Technology Equipment (Immunity)
	EN300 386 Telecommunications Network Equipment (EMC)
	EN50082-1/EN61000-6-1 Generic Immunity Standard
CE marking	UL60950-1
	CSA C22.2 No. 60950-1-03
	EN 60950-1
	IEC 60950-1
	AS/NZS 60950.1

Radio Frequency Interference

When electromagnetic fields act over a long distance, radio frequency interference (RFI) can be propagated. Building wiring can often act as an antenna, receiving the RFI signals and creating more EMI on the wiring.

If you use twisted-pair cable in your plant wiring with a good distribution of grounding conductors, the plant wiring is unlikely to emit radio interference. If you exceed the recommended distances, use a high-quality twisted-pair cable with one ground conductor for each data signal.

Lightning and AC Power Fault Interference

If signal wires exceed recommended cabling distances, or if signal wires pass between buildings, you should consider the effect that a lightning strike in your vicinity might have on the Cisco ASR 1000 Series Router.

The electromagnetic pulse (EMP) generated by lightning or other high-energy phenomena can couple enough energy into unshielded conductors to damage or destroy electronic equipment. If you have previously experienced such problems, you should consult with RFI/EMI experts to ensure that you have adequate electrical surge suppression and shielding of signal cables in your Cisco ASR 1000 Series Router operating environment.

Rack-Mounting Guidelines

This section describes guidelines on rack-mounting.

Precautions for Rack-Mounting

The following rack-mount guidelines are provided to ensure your safety:

- Do not move large racks by yourself. Due to the height and weight of a rack, a minimum of two people are required to accomplish this task.
- Ensure that the rack is level and stable before extending a component from the rack.
- Ensure that proper airflow is provided to components in the rack.
- Do not step or stand on any component or system when servicing other systems or components in a rack.
- When mounting the Cisco ASR 1000 Series Router in a partially filled rack, load the rack from the bottom to the top with the heaviest component at the bottom of the rack.
- If the rack is provided with stabilizing devices, then install the stabilizers before mounting or servicing the unit in the rack.

General Rack Selection Guidelines

Cisco ASR 1000 Series Routers can be mounted in most two-post or four-post, 19-in. equipment racks that comply with the Electronics Industries Association (EIA) standard for equipment racks (EIA-310-D 19-in.). The rack must have at least two posts with mounting flanges to mount the chassis.



Caution When mounting a chassis in any type of rack equipment, ensure that the inlet air to the chassis does not exceed 131°F (55°C).

The distance between the center lines of the mounting holes on the two mounting posts must be 18.31 in. ± 0.06 in. (46.50 cm ± 0.15 cm). The rack-mounting hardware included with the chassis is suitable for most 19-in. equipment racks.

Consider installing the Cisco ASR 1000 Series Router in a rack with the following features:

- NEBS compliant, 19-in. (48.3 cm) wide rack.
- EIA or ETSI hole patterns in the mounting rails. Required mounting hardware is shipped with the Cisco ASR 1000 Series Router. If the rack that you plan to install the system in has metric-threaded rails, you must provide your own metric mounting hardware.
- Perforated top and open bottom for ventilation to prevent overheating.
- Leveling feet for stability.



Note The Cisco ASR 1000 Series Router should *not* be installed in an enclosed rack because the chassis requires an unobstructed flow of cooling air to maintain acceptable operating temperatures for its internal components. Installing the router in any type of enclosed rack—*even with the front and back doors removed* —could disrupt the air flow, trap heat next to the chassis, and cause an overtemperature condition inside the router. If you use an enclosed rack, make certain that there are air vents on all sides of the rack and there is proper ventilation.

Guidelines for 23 in. (Telco) Racks

If needed, you can also install the Cisco ASR 1000 Series Routers in 23 in. (Telco) racks. For information on adapters needed for 23 in. racks, please contact the Newton Instrument Company:

- http://www.enewton.com
- 111 East A Street, Butner NC, USA, 27509
- 919 575-6426

Equipment Rack Guidelines

The placement of the rack can affect personnel safety, system maintenance, and the system ability to operate within the environmental characteristics described in the *Site Environmental Requirements* topic. Choose a proper location for the Cisco ASR 1000 Series Router by following the guidelines below.

Locating for Safety

If the Cisco ASR 1000 Series Router is the heaviest or the only piece of equipment in the rack, consider installing it at or near the bottom to ensure that the rack center of gravity is as low as possible.

For additional information about the proper placement of electronic equipment, see the document *GR-63-CORE, Network Equipment Building System (NEBS) Requirements: Physical Protection*.

Locating for Easy Maintenance

Keep at least 3 feet of clear space in front and behind the rack. This space ensures that you can remove the Cisco ASR 1000 Series Router components and perform routine maintenance and upgrades easily.

Avoid installing the Cisco ASR 1000 Series Router in a congested rack and consider how the routing of cables from other pieces of equipment in the same rack could affect access to the routers cards.

The front and top of the chassis must remain unobstructed to ensure adequate airflow and prevent overheating inside the chassis.

Allow the following clearances for normal system maintenance:

- At the top of the chassis—At least 3 in. (7.6 cm)
- In the front of the chassis—3 to 4 ft (91.44 cm to 121.92 cm)



Note When installing the Cisco ASR 1013 chassis in a 42RU equipment rack, allow at least one to two inches (2.54 cm to 5.08 cm) of vertical clearance between the router and any equipment above or below it.

To avoid problems during installation and ongoing operation, follow these general precautions when you plan the equipment locations and connections:

- Use the **show environment all** command regularly to check the internal system status. The environmental monitor continually checks the interior chassis environment; it provides warnings for high temperature and creates reports on any occurrences. If warning messages are displayed, take immediate action to identify the cause and correct the problem.
- Keep the Cisco ASR 1000 Series Router off the floor and out of areas that collect dust.
- Follow ESD prevention procedures to avoid damage to equipment. Damage from static discharge can cause immediate or intermittent equipment failure.

Locating for Proper Airflow

Ensure the location of the Cisco 1000 Series Router has enough airflow to keep the system operating within the environmental characteristics and the air temperature is sufficient to compensate for the heat dissipated by the system.

Avoid locating the Cisco 1000 Series Router in a location in which the chassis air intake vents could draw in the exhaust air from adjacent equipment. Consider how the air flows through the Cisco 1000 Series Router. The Cisco 1000 Series Router airflow direction is front to back with ambient air drawn in from the venting located on the chassis front sides.

Site Planning Checklist

Use the following checklist to perform and account for all the site-planning tasks described in this chapter:

- The site meets the environmental requirements.
- The site air conditioning system can compensate for the heat dissipation of the Cisco ASR 1000 Series Routers.
- The floor space that the Cisco ASR 1000 Series Routers occupy can support the weight of the system).
- Electrical service to the site complies with the requirements.
- The electrical circuit servicing the Cisco ASR 1000 Series Routers complies with the requirements).
- Consideration has been given to the console port wiring, and limitations of the cabling involved, according to TIA/EIA-232F.
- The Cisco ASR 1000 Series Router Ethernet cabling distances are within limitations.
- The equipment rack in which you plan to install the Cisco ASR 1000 Series chassis complies with requirements.
- Careful consideration has be given to safety, ease of maintenance, and proper airflow in selecting the location of the rack.

Preventing Electrostatic Discharge Damage

Electrostatic discharge (ESD) damage, occurs when electronic cards or components are improperly handled and can result in complete or intermittent failures. The performance routing engine (PRE), and all line cards consist of a printed circuit card that is fixed in a metal carrier. Electromagnetic interference (EMI) shielding and connectors are integral components of the carrier. Although the metal carrier helps to protect the cards from ESD, use an antistatic strap each time you handle the modules. Handle the carriers by the edges only; never touch the cards or connector pins.



Caution Always tighten the captive installation screws on all system components when you are installing them. These screws prevent accidental removal of the module, provide proper grounding for the system, and help to ensure that the bus connectors are properly seated in the backplane.

Static electricity can harm delicate components inside your system. To prevent static damage, discharge static electricity from your body before you touch any of your system components, such as an microprocessor. As you continue to work on your system, periodically touch an unpainted metal surface on the computer chassis.

Following are guidelines for preventing ESD damage:

- Always use an ESD-preventive wrist or ankle strap and ensure that it makes good skin contact. Before removing a card from the chassis, connect the equipment end of the strap to the ESD plug at the bottom of the chassis below the power entry modules.
- Handle line cards by the faceplates and carrier edges only; avoid touching the card components or any connector pins.
- When removing a card, place the removed module component-side-up on an antistatic surface or in a static-shielding bag. If the module will be returned to the factory, immediately place it in a static-shielding bag.
- Avoid contact between the modules and clothing. The wrist strap protects the card from ESD voltages on the body only; ESD voltages on clothing can still cause damage.
- When transporting a sensitive component, first place it an antistatic container or packaging.
- Handle all sensitive components in a static-safe area. If possible, use antistatic floor pads and workbench pads.

Caution For safety, periodically check the resistance value of the antistatic strap. The measurement should be between 1 and 10 ohms.

Caution Always tighten the captive installation screws on all the system components when you are installing them. These screws prevent accidental removal of the module, provide proper grounding for the system, and help ensure that the bus connectors are properly seated in the backplane.

Note The ESD strap socket can be in a different location on each Cisco ASR 1000 Series Router.

Electrical Safety

All system components are hot-swappable. They are designed to be removed and replaced while the system is operating without presenting an electrical hazard or damage to the system.

Follow these basic guidelines when you are working with any electrical equipment:

- Before beginning any procedures requiring access to the chassis interior, locate the emergency power-off switch for the room in which you are working.
- Disconnect all power and external cables before installing or removing a chassis.
- Do not work alone when potentially hazardous conditions exist.
- Never assume that power has been disconnected from a circuit; always check.
- Do not perform any action that creates a potential hazard to people or makes the equipment unsafe. Never install equipment that appears damaged.
- Carefully examine your work area for possible hazards such as moist floors, ungrounded power extension cables, and missing safety grounds.

In addition, use the guidelines that follow when working with any equipment that is disconnected from a power source but is still connected to telephone wiring or other network cabling.

- Never install telephone wiring during a lightning storm.

- Never install telephone jacks in wet locations unless the jack is specifically designed for wet locations.
- Never touch uninsulated telephone wires or terminals unless the telephone line has been disconnected at the network interface.
- Use caution when installing or modifying telephone lines.

Warning Do not work on the system or connect or disconnect cables during periods of lightning activity. Statement 1006

Receiving the Cisco ASR 1000 Series Router

Each Cisco ASR 1000 Series chassis is shipped in a container that is strapped to a pallet as illustrated in the following figure.

Figure 31: Cisco ASR 1000 Series Router Packaged for Shipping

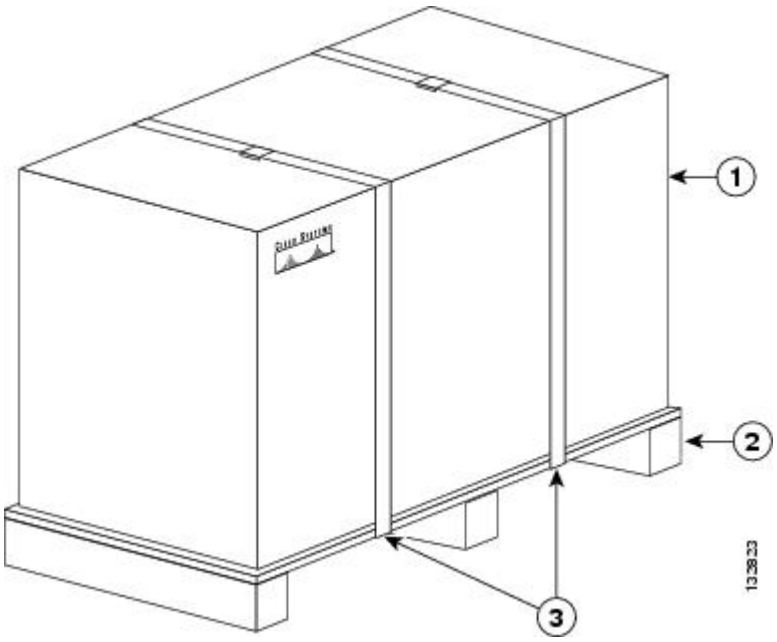

1	Outside carton	3	Packing straps
2	Pallet	—	—

Note We recommend that you have at least two people available to help with the installation and ensure safe lifting.

Chassis-Lifting Guidelines

The chassis is not intended to be moved frequently. Before you install the system, ensure that your site is properly prepared so you can avoid having to move the chassis later to accommodate power sources and network connections.

Two or more people are required to lift the chassis. Each time you lift the chassis or any heavy object, follow these guidelines:

- Never attempt to lift the chassis by yourself. Because of the size and weight of the chassis, use at least two people to safely lift and move it without causing injury to yourself or damaging the equipment.
- Ensure that your footing is solid, and balance the weight of the chassis between your feet.
- Lift the chassis slowly; never move suddenly or twist your body as you lift.
- Keep your back straight and lift with your legs, not your back. If you must bend down to lift the chassis, bend at the knees, not at the waist, to reduce the strain on your back muscles.
- Do not remove installed components from the chassis.
- Always disconnect all external cables before lifting or moving the chassis.General Safety Guidelines.



Warning To prevent injury and equipment damage, never attempt to lift or tilt the router chassis using the handles on the fan tray or on line cards. These handles do not support the weight of the chassis.

SUMMARY STEPS

1. Each person should stand on either side of the chassis and place one hand under the air intake at the bottom front of the chassis.
2. With the other hand, grasp the top rear of the chassis under the air exhaust and carefully lift the chassis.

DETAILED STEPS

Step 1 Each person should stand on either side of the chassis and place one hand under the air intake at the bottom front of the chassis.

Step 2 With the other hand, grasp the top rear of the chassis under the air exhaust and carefully lift the chassis.

Tools and Equipment

The tools and equipment listed below are recommended as the minimum necessary to install the Cisco ASR 1000 Series Router. You may need additional tools and equipment to install associated equipment and cables. You may also require test equipment to check electronic and optical signal levels, power levels, and communications links.

- Phillips hand screwdriver
- 3.5mm flat-blade screwdriver
- Tape measure (optional)
- Level (optional)

- Power drill
- 8-gauge wire
- Rack-mount brackets
- Cable-management brackets

Unpacking and Verifying Shipping Contents

When you receive your chassis, perform the following steps and use the shipping contents checklist from the next section:

SUMMARY STEPS

1. Inspect the box for any shipping damage. (if there is damage contact your service representative).
2. Unpack the Cisco ASR 1000 Series Router.
3. Perform a visual inspection of the chassis.
4. After you have unpacked the system verify that you have received all of the required components. Using the packing list as a guide, take the following steps to check the contents of the Cisco ASR 1000 Series Router shipping container:
5. Check the contents of the boxes containing accessory items. Verify that you have received all equipment listed in your order.
6. Check that all Cisco ASR 1000 Series route processors, Cisco ASR 1000 Series embedded services processors, Cisco ASR 1000 Series SPA interface processors (SIPs), and power supplies you ordered are installed in the chassis. Ensure that the configuration matches the packing list.

DETAILED STEPS

Step 1 Inspect the box for any shipping damage. (if there is damage contact your service representative).

Step 2 Unpack the Cisco ASR 1000 Series Router.

Step 3 Perform a visual inspection of the chassis.

Step 4 After you have unpacked the system verify that you have received all of the required components. Using the packing list as a guide, take the following steps to check the contents of the Cisco ASR 1000 Series Router shipping container:

Step 5 Check the contents of the boxes containing accessory items. Verify that you have received all equipment listed in your order.

Step 6 Check that all Cisco ASR 1000 Series route processors, Cisco ASR 1000 Series embedded services processors, Cisco ASR 1000 Series SPA interface processors (SIPs), and power supplies you ordered are installed in the chassis. Ensure that the configuration matches the packing list.

Checking the Shipping Container Contents

Use the components list shown in the following table to check the contents of the Cisco ASR 1000 Series Router shipping container. Do not discard the shipping container. You need the container if you move or ship the Cisco ASR 1000 Series Router in the future.

Table 47: Cisco ASR 1000 Series Router Shipping Container Contents

Component	Description
Chassis	Cisco ASR 1000 Series Router configured with dual AC or dual DC power supplies and a shared port adapter blank panel if a shared port adapter has not been ordered.
Accessories Kit **Note** You must order the Accessories Kit separately if you order the Cisco ASR 1009-X Router or Cisco ASR 1006-X Router chassis as a spare.	Front and rear chassis rack-mount brackets that you will attach to the chassis with the respective screws
	Three sets of screws, one set for: • Front rack-mount brackets (use the black screws) • Rear rack-mount brackets (use the package with the 5 screws) • Cable-management brackets (use the package with the 4 screws)
	Two cable-management brackets with U-feature design devices attached, with a different size for each chassis.
	1 RJ-45 to RJ-45 crossover cable 1 RJ-45 to DB-9 (female) adapter
ESD, Wrist Strap (disposable)	One disposable wrist strap
Documentation	*Regulatory Compliance and Safety Information for the Cisco ASR 1000 Series Aggregation Services Routers* at http://www.cisco.com/c/en/us/td/docs/routers/asr1000/rcsi/asr1rcsi.html.
Optional Equipment	Power cord if an AC power supply was shipped. There are none for the DC power supply units.



Note Most Cisco documentation is online or on the Cisco Documentation DVD. Documentation that ships with your Cisco ASR 1000 Series Router includes the *Regulatory Compliance and Safety Information for the Cisco ASR 1000 Series Aggregation Services Routers* document, and the *Documentation Roadmap for Cisco ASR 1000 Series*, which provides links and information for the Cisco ASR 1000 Series Aggregation Services Routers documentation.

Cisco ASR 1000 Series Router Installation Checklist

To assist you with your installation and to provide a historical record of what was done by whom, photocopy the Cisco ASR 1000 Series Router Installation Checklist shown in the following table. Use this to record when each procedure or verification is completed. When the checklist is completed, place it in your site log along with the other records for your new router.

Table 48: Cisco ASR 1000 Series Router Installation Checklist

Task	Verified By	Date
Date chassis received		
Chassis and all accessories unpacked		
Types and numbers of interfaces verified		
Safety recommendations and guidelines reviewed		
Installation Checklist copied		
Site log established and background information entered		
Site power voltages verified		
Site environmental specifications verified		
Required passwords, IP addresses, device names, and so on, available		
Required tools available		
Network connection equipment available		
Cable-management brackets installed (optional, but recommended)		
AC power cable(s) connected to AC source(s) and router		
DC power cable(s) connected to DC source(s) and router		
Network interface cables and devices connected		
System power turned on		
System boot complete (STATUS LED is on)		
Shared port adapters are operational		
Correct hardware configuration displayed after system banner appears		

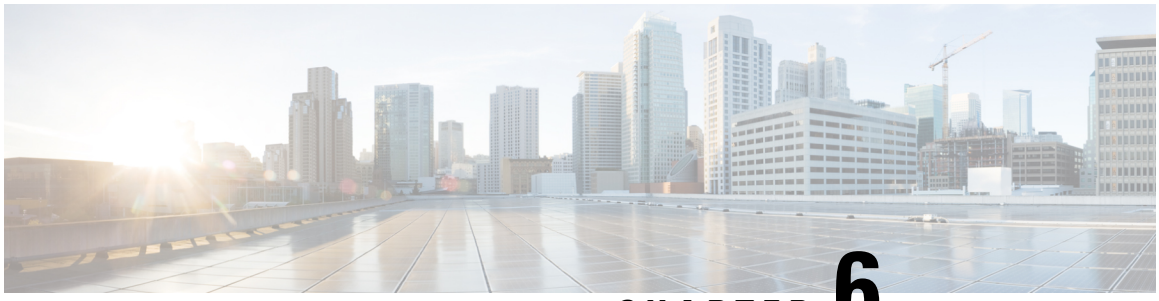

CHAPTER 6

Cisco ASR 1006 Router Overview and Installation

This chapter describes the Cisco ASR 1006 Router and the procedures for installing the Cisco ASR 1006 Router on an equipment shelf or in equipment racks. It also describes how to connect interface and power cables.

This chapter contains the following sections:

- Cisco ASR 1006 Router Description, on page 117
- Installation Methods, on page 120
- General Rack Installation Guidelines, on page 121
- Guidelines for an Equipment Shelf or Tabletop Installation, on page 122
- Equipment Shelf or Tabletop Installation, on page 122
- Rack-Mounting the Cisco ASR 1006 Router, on page 125
- Attaching the Chassis Rack-Mount Brackets, on page 126
- Installing the Cisco ASR 1006 Router in a Rack, on page 129
- Attaching the Cable-Management Brackets, on page 134
- Attaching a Chassis Ground Connection, on page 136
- Connecting the Shared Port Adapter Cables, on page 139
- Connecting the Console and Auxiliary Port Cables, on page 139
- Connecting Power to the Cisco ASR 1006 Router, on page 140
- Connecting a Terminal to the Cisco ASR 1000 Series RP Console Port, on page 150
- Connecting the System Cables, on page 152
- Attaching Cable Retention Bracket on AC Power Supply, on page 152

Cisco ASR 1006 Router Description

The Cisco ASR 1006 Router supports full-width card modules. It is designed with a single midplane with connectors on one interface midplane. The Cisco ASR 1006 Router supports:

- Three Cisco ASR 1000 Series SPA Interface Processors (SIPs)
- Twelve SPA slots
- Two embedded services processors (Cisco ASR1000-ESP10, Cisco ASR1000-ESP20, Cisco ASR1000-ESP40, or Cisco ASR1000-ESP100)

Note Cisco ASR1000-ESP40 and Cisco ASR1000-ESP100 are supported on Cisco ASR 1006 Router only if Cisco ASR1000-RP2 is installed on the router.

- Two Cisco ASR 1000 Series Route Processors (Cisco ASR1000-RP1 or Cisco ASR1000-RP2
)
- Dual (redundant) AC and DC power supplies

This section contains the following topics:

Front View

The following image shows the Cisco ASR 1006 Router with modules and filler plates installed.

Figure 32: Cisco ASR 1006 Router—Front View

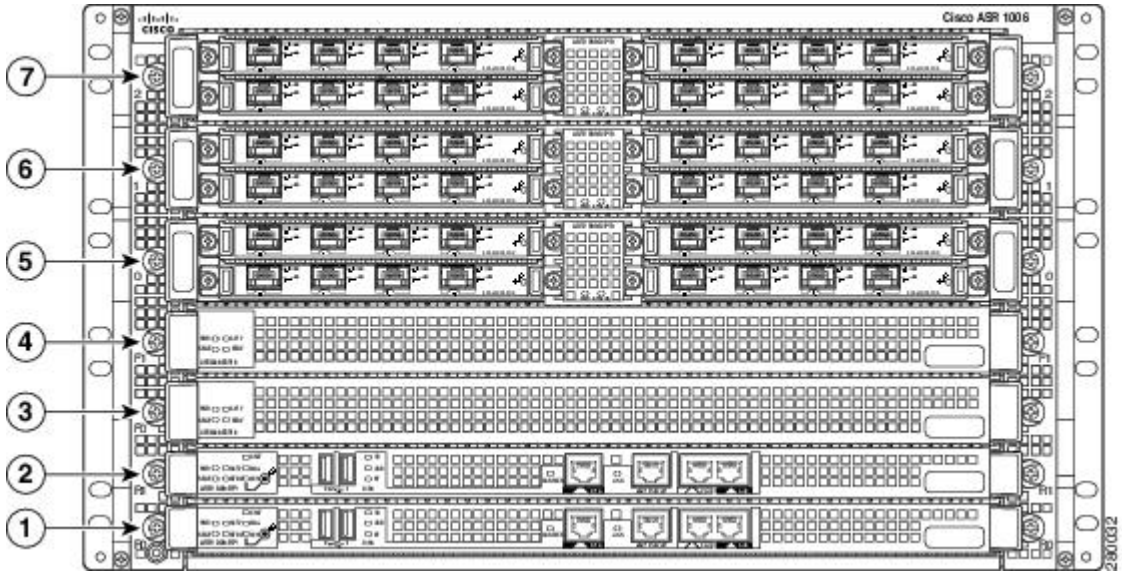

1	Slot R0 with ASR 1000 Series RP	5	ASR 1000 Series SIP slot 0
2	Slot R1 with ASR 1000 Series RP	6	ASR 1000 Series SIP slot 1
3	Slot F0 with ASR 1000 Series ESP	7	ASR 1000 Series SIP slot 2
4	Slot F1 with ASR 1000 Series ESP		

Rear View

The following image shows the rear of the Cisco ASR 1006 Router with the ASR1006-PWR-AC power supply installed.

Figure 33: Cisco ASR 1006 Router Rear View with the AC Power Supply (ASR1006-PWR-AC)

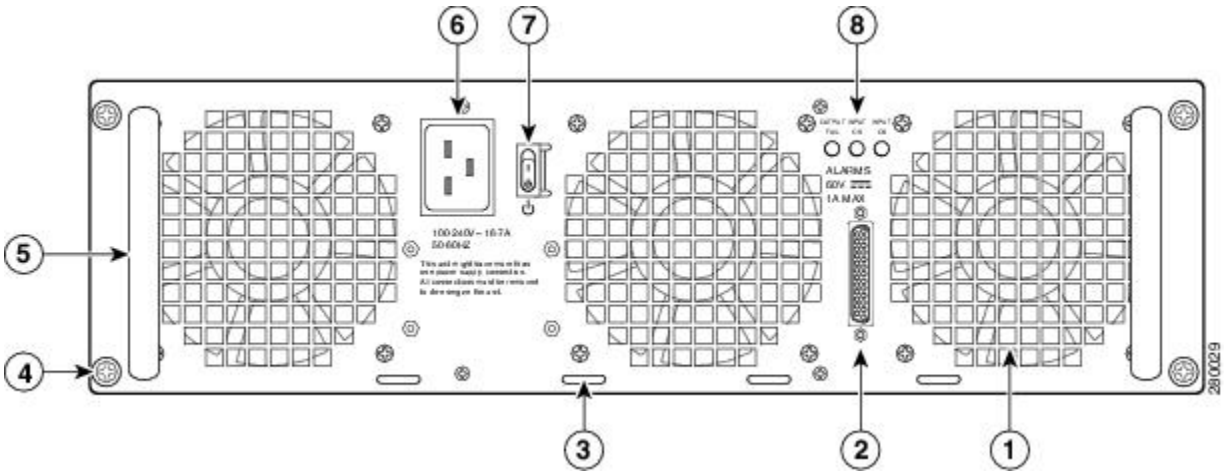

1	AC power supply fan	5	AC power supply handle
2	AC power supply DB-25 alarm connector—A female DB-25 sub connector which enables you to attach an external alarm monitoring facility to the router, thus supporting a telco-style of handling alarm conditions in the router. For a description of the DB-25 alarm connector, see the "How Cisco ASR1000-RP Alarm Monitoring Works" section on page 2-22 .	6	AC power inlet
3	Cable tie wrap tabs	7	AC power supply Standby switch. A Standby switch is not considered a disconnect.
4	AC power supply captive screws	8	AC power supply LEDs

Internal fans draw cooling air into the chassis and across internal components to maintain an acceptable operating temperature. (See Figure 33: Cisco ASR 1006 Router Rear View with the AC Power Supply (ASR1006-PWR-AC), on page 119.) The fans are located at the rear of the chassis. A two-hole grounding lug is located on the side of the chassis. Two power supplies, either two AC power supplies or two DC power supplies, are accessed from the rear of the router.

Note You have already unpacked your chassis and read all the site requirements for your new equipment. Proceed with the installation.

Note Do not combine AC and DC power supplies in the same chassis.

Warning This warning symbol means danger. You are in a situation that could cause bodily injury. Before you work on any equipment, be aware of the hazards involved with electrical circuitry and be familiar with standard practices for preventing accidents. Use the statement number provided at the end of each warning to locate its translation in the translated safety warnings that accompanied this device. Statement 1071

Warning Before you install, operate, or service the system, read the *Regulatory Compliance and Safety Information for Cisco ASR 1000 Series Aggregation Services Routers* publication. This document provides important safety information you should know before working with the system. Statement 200

Note You have already unpacked your chassis and read all the site requirements for your new equipment. Proceed with the installation.

Cisco ASR 1006 Router Slot Numbering

1	Slot RP0 with ASR 1000 Series RP1	5	ASR 1000 Series SIP slot 0
2	Slot RP1 with ASR 1000 Series RP1	6	ASR 1000 Series SIP slot 1
3	Slot FP0 with ASR 1000 Series ESP	7	ASR 1000 Series SIP slot 2
4	Slot FP1 with ASR 1000 Series ESP	—	—

The Cisco ASR 1006 Router contains three Cisco ASR 1000 Series SPA Interfaces (SIPs) that support four subslots for the installation of SPAs.

shows the Cisco ASR 1006 Router SPA subslot location.

Installation Methods

Although rack-mounting is the preferred method of installation for the Cisco ASR 1006 Router, you can mount the chassis:

- On an equipment shelf or tabletop
- In a19-inch wide (standard), 4-post equipment rack or two-post, using the rack-mount brackets in the accessory kit

Note The Cisco ASR 1006 Router usually ships fully loaded. However, you can remove components from the chassis to make the chassis lighter for your rack installation.

General Rack Installation Guidelines

When planning your rack installation, consider the following guidelines:

- The Cisco ASR 1006 Router requires a minimum of 6 rack units (10.45 inches or 26.6 cm) of vertical rack space. Measure the proposed rack location before mounting the chassis in the rack.
- Before using a particular rack, check for obstructions (such as a power strip) that could impair rack-mount installation. If a power strip does impair a rack-mount installation, remove the power strip before installing the chassis, and then replace it after the chassis is installed.
- Allow sufficient clearance around the rack for maintenance. If the rack is mobile, you can push it back near a wall or cabinet for normal operation and pull it out for maintenance (installing or moving cards, connecting cables, or replacing or upgrading components). Otherwise, allow 19 inches (48.3 cm) of clearance to remove field-replaceable units

  .
- Maintain a minimum clearance of 3 inches (7.62 cm) for the front and rear of the chassis for proper chassis cooling. Avoid placing the chassis in an overly congested rack or directly next to another equipment rack; otherwise, the heated exhaust air from other equipment can enter the inlet air vents and cause an overtemperature condition inside the router.
- If rack space allows, it is recommended to leave one rack unit (1.75 inch or 4.45 cm) of vertical clearance between the chassis and any equipment directly above it or below.



Caution Depending on your installation and co-located equipment power dissipation, it is recommended to have some air gap between chassis, if space allows, to reduce residual heating from one chassis to another.

- Always install heavier equipment in the lower half of a rack to maintain a low center of gravity to prevent the rack from falling over.
- Install and use the cable-management brackets included with the Cisco ASR 1006 Router to keep cables organized and out of the way of the cards and processors. Ensure that cables from other equipment already installed in the rack do not impair access to the cards or require you to disconnect cables unnecessarily to perform equipment maintenance or upgrades.
- Install rack stabilizers (if available) before you mount the chassis.
- Provide an adequate chassis ground (earth) connection for your router chassis

  .

In addition to the preceding guidelines, review the precautions for avoiding excessive temperature conditions in the "Electrical Safety" section on page 5-21 .

Table 49: Cisco ASR 1006 Router Dimensions and Weight, on page 122 provides the Cisco ASR 1006 Router dimensions and weight information.

Table 49: Cisco ASR 1006 Router Dimensions and Weight

Cisco ASR 1006	Dimensions
Depth	22.50 in. (57.15 cm)(including card handles, cable-management brackets, power supply handles)
Height	10.45 in. (26.543 cm) - 6RU rack-mount per EIA RS-310 standard
Width	17.25 in. (43.815 cm) - 19 inch rack-mount
Weight	77.1 lb (34.971 kg) - fully configured

Guidelines for an Equipment Shelf or Tabletop Installation

The chassis should already be in the area where you will install it. If you have not determined where to install your chassis, see the "Cisco ASR 1000 Series Routers Component Overview" section on page 2-1 for information about site considerations.

If you are not rack-mounting your Cisco ASR 1000 series chassis, place it on a sturdy equipment shelf or tabletop.

When installing the Cisco ASR 1006 Router on an equipment shelf or tabletop, ensure that the surface is clean and that you have considered the following:

- The Cisco ASR 1006 Router requires at least 3 inches (7.62 cm) of clearance at the inlet and exhaust vents (the front and top/rear sides of the chassis).
- The Cisco ASR 1006 Router should be installed off the floor. Dust that accumulates on the floor is drawn into the interior of the router by the cooling fans. Excessive dust inside the router can cause overtemperature conditions and component failures.
- There must be approximately 19 inches (48.3 cm) of clearance at the front and rear of the chassis to install and replace FRUs, or to access network cables and equipment

  .
- The Cisco ASR 1006 Router needs adequate ventilation. Do not install it in an enclosed cabinet where ventilation is inadequate.
- Keep the cable-management brackets ready if you plan to install it on the front of the chassis.
- An adequate chassis ground (earth) connection exists for your router chassis (see the Attaching a Chassis Ground Connection, on page 136).
- Always follow proper lifting practices as outlined in the "Chassis-Lifting Guidelines" section on page 5-23 when handling the chassis

  .

Equipment Shelf or Tabletop Installation

At least two people are required to lift the chassis onto a tabletop or platform. To prevent injury, keep your back straight and lift with your legs, not your back. Statement 164

Figure 34: Lifting the Chassis

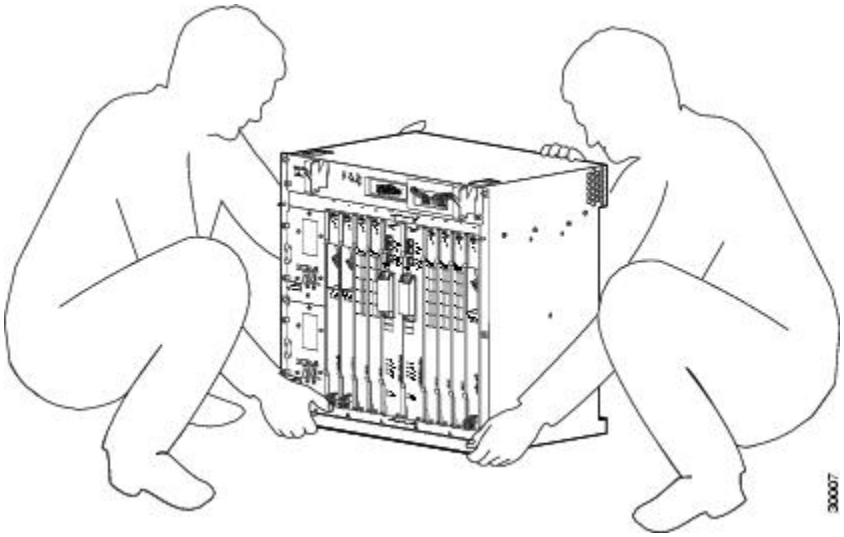

The chassis in the image does not represent the Cisco ASR 1000 Series Router. This is only an example of how to lift a Cisco chassis.

SUMMARY STEPS

1. Attach the front rack-mount brackets. Locate the threaded holes in the front sides of the chassis (first holes beyond the vent holes) and use the package of black screws that shipped with the chassis.
2. Align the front rack-mount bracket to one side of the chassis.
3. Insert and tighten the screws on one side.
4. Repeat Step 2 through Step 3 on the other side of the chassis. Use at least 4 screws to secure the rack-mount brackets to the chassis.
5. Gather the two cable-management brackets and screws shipped with the chassis. The following image shows the cable-management brackets attached on the front of the Cisco ASR 1006 Router when the chassis is placed on a table top or equipment shelf.
6. Screw the cable-management bracket to each side of the rack-mount brackets already attached to the chassis. For each cable-management bracket, use two screws from the package of four screws.
7. Ensure that all the screws are securely tightened.
8. Go to the Attaching a Chassis Ground Connection, on page 136 for instructions about completing the installation.

DETAILED STEPS

Step 1 Attach the front rack-mount brackets. Locate the threaded holes in the front sides of the chassis (first holes beyond the vent holes) and use the package of black screws that shipped with the chassis.

Step 2 Align the front rack-mount bracket to one side of the chassis.

Step 3 Insert and tighten the screws on one side.

Step 4 Repeat Step 2 through Step 3 on the other side of the chassis. Use at least 4 screws to secure the rack-mount brackets to the chassis.

Note The cable-management brackets are installed on the chassis after you install the chassis rack-mount brackets.

Step 5 Gather the two cable-management brackets and screws shipped with the chassis. The following image shows the cable-management brackets attached on the front of the Cisco ASR 1006 Router when the chassis is placed on a table top or equipment shelf.

Note Make certain that the cable-management 'U' feature device has the open end pointing upwards when you attach it to the chassis.

Figure 35: Attaching the Cable-Management Brackets to the Cisco ASR 1006 Router

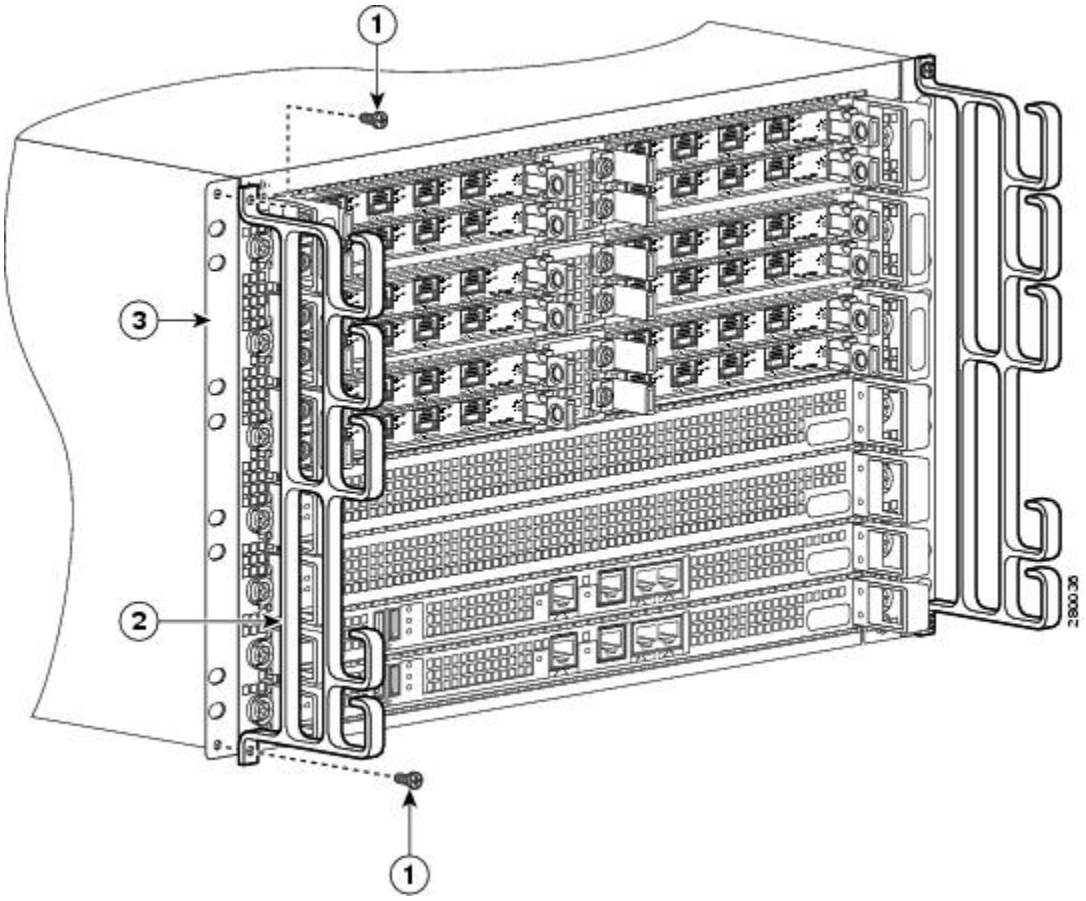

1	Cable-management screws	3	Chassis front rack-mount bracket
2	Cable-management bracket	—	—

Step 6 Screw the cable-management bracket to each side of the rack-mount brackets already attached to the chassis. For each cable-management bracket, use two screws from the package of four screws.

Step 7 Ensure that all the screws are securely tightened.

Step 8 Go to the Attaching a Chassis Ground Connection, on page 136 for instructions about completing the installation.

Rack-Mounting the Cisco ASR 1006 Router

The Cisco ASR 1006 Router can be installed with both front or rear rack-mount brackets. The chassis rack-mounting flanges are secured directly to the chassis before you lift it into the rack. For installing Cisco ASR 1006 Router rack-mount brackets, go to:

Verifying Rack Dimensions

Before you install the chassis, measure the space between the vertical mounting flanges (rails) on your equipment rack to verify that the rack conforms to the measurements shown in the following image.

SUMMARY STEPS

1. Mark and measure the distance between two holes on the left and right mounting rails.
2. Measure the space between the inner edges of the left front and right front mounting flanges on the equipment rack.

DETAILED STEPS

Step 1 Mark and measure the distance between two holes on the left and right mounting rails.

The distance should measure 18.31 inches ± 0.06 inches (46.5 cm ± 0.15 cm).

Note Measure for pairs of holes near the bottom, middle and top of the equipment rack to ensure that the rack posts are parallel.

Step 2 Measure the space between the inner edges of the left front and right front mounting flanges on the equipment rack.

The space must be at least 17.7 inches (45 cm) to accommodate the chassis which is 17.25 inches (43.8 cm) wide and fits between the mounting posts on the rack.

Figure 36: Verifying Equipment Rack Dimensions

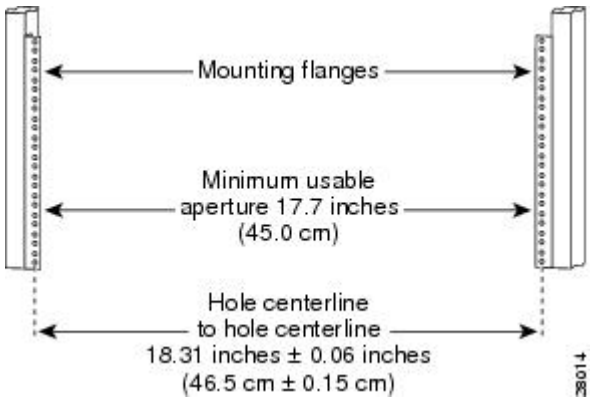

Attaching the Chassis Rack-Mount Brackets

This section explains how to attach the front and rear rack-mount brackets to the chassis. Before installing the chassis in the rack, you must install the rack-mount brackets on each side of the chassis.

The parts and tools required for installing the rack-mount brackets and cable-management brackets are listed in the "Tools and Equipment" section on page 5-23 .

Note The cable-management brackets are installed on the chassis after you install the chassis rack-mount brackets and mount the chassis in the rack.

Chassis Front Rack-Mount Brackets

Determine where in the rack you want the chassis to be mounted. If you are mounting more than one chassis in the rack, then start from the bottom up or the center of the rack. The following image shows the brackets attached to the chassis. Depending on the bracket holes you use, the chassis may protrude in the rack.

To install the front rack-mount brackets on the Cisco ASR 1006 Router, perform the following steps:

SUMMARY STEPS

1. Locate the threaded holes on the side of the chassis. Make certain that you hold the front rack-mount bracket with the ear and holes facing outward and towards the front of the chassis (see the following image).
2. Position the front rack-mount bracket top hole with the chassis first top hole behind the side vent holes (see Figure 37: Attaching the Front Rack-Mount Brackets to the Cisco ASR 1006 Router, on page 127).
3. Insert and tighten the black screws on one side.
4. Repeat Step 1 through Step 3 on the other side of the chassis. Use black screws to secure the rack-mount brackets to the chassis.
5. Install the chassis in the rack. To install the Cisco ASR 1006 Router in a rack, go to the Installing the Cisco ASR 1006 Router in a Rack, on page 129.

DETAILED STEPS

Step 1 Locate the threaded holes on the side of the chassis. Make certain that you hold the front rack-mount bracket with the ear and holes facing outward and towards the front of the chassis (see the following image).

Figure 37: Attaching the Front Rack-Mount Brackets to the Cisco ASR 1006 Router

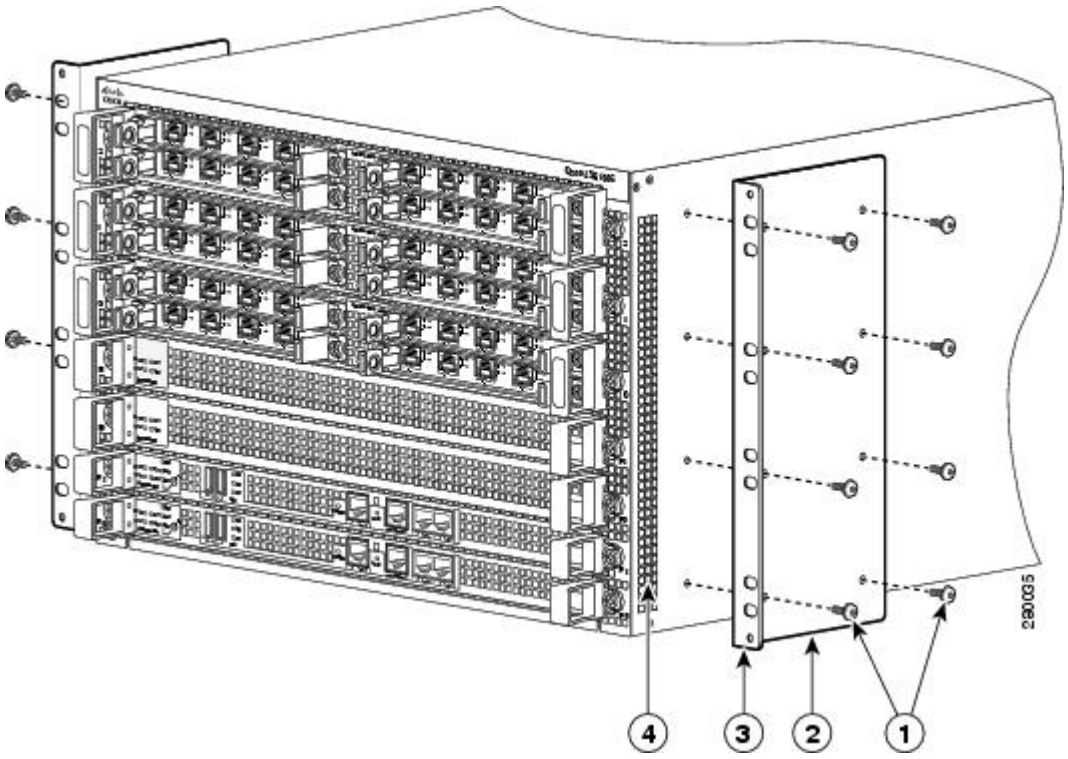

1	Front rack-mount bracket screws	3	Front rack-mount bracket ear and holes
2	Front rack-mount bracket	4	Chassis side vent location

Step 2 Position the front rack-mount bracket top hole with the chassis first top hole behind the side vent holes (see Figure 37: Attaching the Front Rack-Mount Brackets to the Cisco ASR 1006 Router, on page 127).

Step 3 Insert and tighten the black screws on one side.

Step 4 Repeat Step 1 through Step 3 on the other side of the chassis. Use black screws to secure the rack-mount brackets to the chassis.

Step 5 Install the chassis in the rack. To install the Cisco ASR 1006 Router in a rack, go to the Installing the Cisco ASR 1006 Router in a Rack, on page 129.

What to do next

This completes the steps for attaching the front rack-mount brackets to the Cisco ASR 1006 Router.

Chassis Rear Rack-Mount Brackets

If you are rack-mounting the chassis using the rear rack-mount brackets, then this type of installation provides for the chassis being recessed in the rack.

To install the front rack-mount brackets on the Cisco ASR 1006 Router, perform the following steps:

SUMMARY STEPS

1. Locate the threaded holes on the rear side of the chassis. Make certain that you hold the rear t rack-mount bracket with the ear and holes facing outward and towards the rear of the chassis.
2. Position the rear rack-mount bracket top hole with the chassis second top hole from the back (See Figure 38: Attaching the Rear Rack-Mount Brackets to the Cisco ASR 1006 Router, on page 128).
3. Insert and tighten the screws on one side.
4. After the bracket is secured to the side of the chassis, slide the two remaining components into the side rack-mount bracket.
5. Repeat Step 1 through Step 3 on the other side of the chassis. Use all the screws to secure the rear rack-mount brackets to the chassis.

DETAILED STEPS

Step 1 Locate the threaded holes on the rear side of the chassis. Make certain that you hold the rear t rack-mount bracket with the ear and holes facing outward and towards the rear of the chassis.

The following image shows where to attach the rear rack-mount brackets to the Cisco ASR 1006 Router.

Figure 38: Attaching the Rear Rack-Mount Brackets to the Cisco ASR 1006 Router

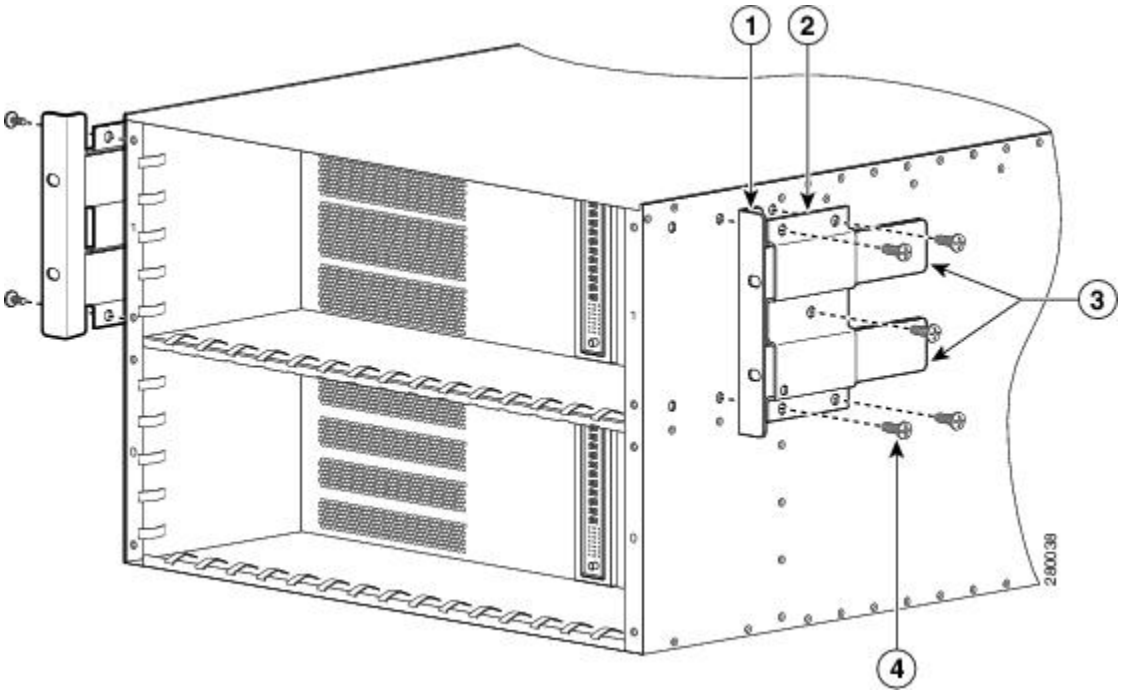

1	Rear rack-mount bracket ear and holes	3	Rear rack-mount bracket components that slide into rear bracket attached to the chassis
2	Rear rack-mount bracket	4	Rear rack-mount bracket screws

Step 2 Position the rear rack-mount bracket top hole with the chassis second top hole from the back (See Figure 38: Attaching the Rear Rack-Mount Brackets to the Cisco ASR 1006 Router, on page 128).

Step 3 Insert and tighten the screws on one side.

Step 4 After the bracket is secured to the side of the chassis, slide the two remaining components into the side rack-mount bracket.

Step 5 Repeat Step 1 through Step 3 on the other side of the chassis. Use all the screws to secure the rear rack-mount brackets to the chassis.

What to do next

This completes the steps for attaching the rear rack-mount brackets to the Cisco ASR 1006 Router.

Caution Before you mount the Cisco ASR 1006 Router on a rack, make certain you read which rack-mount bracket ear holes to use when positioning the chassis in the rack. Installation of the cable-management bracket is simplified when you use the designated ear holes on the rack-mount bracket. For cable-management installation instructions, see the Attaching the Cable-Management Brackets, on page 134

Installing the Cisco ASR 1006 Router in a Rack

After installing the rack-mount brackets on the chassis, you mount the chassis by securing the rack-mount brackets to two posts or mounting strips in the rack using the screws provided. Because the rack-mount brackets support the weight of the entire chassis, be sure to use all screws to fasten the two rack-mount brackets to the rack posts.

Warning To prevent bodily injury when mounting or servicing this unit in a rack, you must take special precautions to ensure that the system remains stable. The following guidelines are provided to ensure your safety:-This unit should be mounted at the bottom of the rack if it is the only unit in the rack.-When mounting this unit in a partially filled rack, load the rack from the bottom to the top with the heaviest component at the bottom of the rack.-If the rack is provided with stabilizing devices, install the stabilizers before mounting or servicing the unit in the rack. Statement 1006

We recommend that you allow at least 1 or 2 inches (2.54 or 5.08 cm) of vertical clearance between the router and any equipment directly above and below it.

To install the chassis in the rack, perform the following steps:

SUMMARY STEPS

1. On the chassis, ensure that all screw fasteners on the installed components are securely tightened.
2. Make sure that your path to the rack is unobstructed. If the rack is on wheels, ensure that the brakes are engaged or that the rack is otherwise stabilized. See the next sections on the types of racks you can use to install the chassis.
3. (Optional) Install a shelf in the rack to support the Cisco ASR 1006 Router. If you use a shelf, this will help support the chassis while you secure it to the rack.
4. With two people, lift the chassis into position between the rack posts.
5. Align the mounting bracket holes with the rack post holes and attach the chassis to the rack.

6. Position the chassis until the rack-mounting flanges are flush against the mounting rails on the rack.
7. Hold the chassis in position against the mounting rails and follow these steps:
8. Tighten all screws on each side to secure the chassis to the equipment rack.

DETAILED STEPS

Step 1 On the chassis, ensure that all screw fasteners on the installed components are securely tightened.

Step 2 Make sure that your path to the rack is unobstructed. If the rack is on wheels, ensure that the brakes are engaged or that the rack is otherwise stabilized. See the next sections on the types of racks you can use to install the chassis.

Step 3 (Optional) Install a shelf in the rack to support the Cisco ASR 1006 Router. If you use a shelf, this will help support the chassis while you secure it to the rack.

Step 4 With two people, lift the chassis into position between the rack posts.

Step 5 Align the mounting bracket holes with the rack post holes and attach the chassis to the rack.

Note If you are using a shelf then raise the chassis to the level of the shelf. Let the bottom of the chassis rest on the brackets, but continue to support the chassis.

Step 6 Position the chassis until the rack-mounting flanges are flush against the mounting rails on the rack.

Step 7 Hold the chassis in position against the mounting rails and follow these steps:

a) Insert the bottom screw into the third hole up from the bottom of the rack-mount ear and use a hand-held screwdriver to tighten the screw to the rack rail.

Tip In the next step, insert the top screw diagonally from the bottom screw that you just attached.This helps with keeping the chassis in place.

b) Insert the top screw into the third hole down from the top of the rack-mount ear and tighten the screw to the rack rail.
c) Insert a screw in the middle of the rack-mount bracket on both sides of the chassis.
d) Repeat these steps for the other side of the chassis.

Note By using the specified rack-mount bracket ear holes, the cable-management bracket can be easily attached to the rack-mount bracket when the chassis is in the rack.

Step 8 Tighten all screws on each side to secure the chassis to the equipment rack.

What to do next

You can install your Cisco ASR 1006 Router in a two-post rack or a four-post rack. To install the router in a two-post rack, see the Two-Post Rack Installation, on page 130. To install the router in a four-post rack, see the Four-Post Rack Installation, on page 132.

Two-Post Rack Installation

The Cisco ASR 1006 Router can be installed in a two-post rack, either 19 inch or 23 inch. The following image shows the router installed on a two-post rack.

Figure 39: Installing the Cisco ASR 1006 Router in a Two-Post Equipment Rack

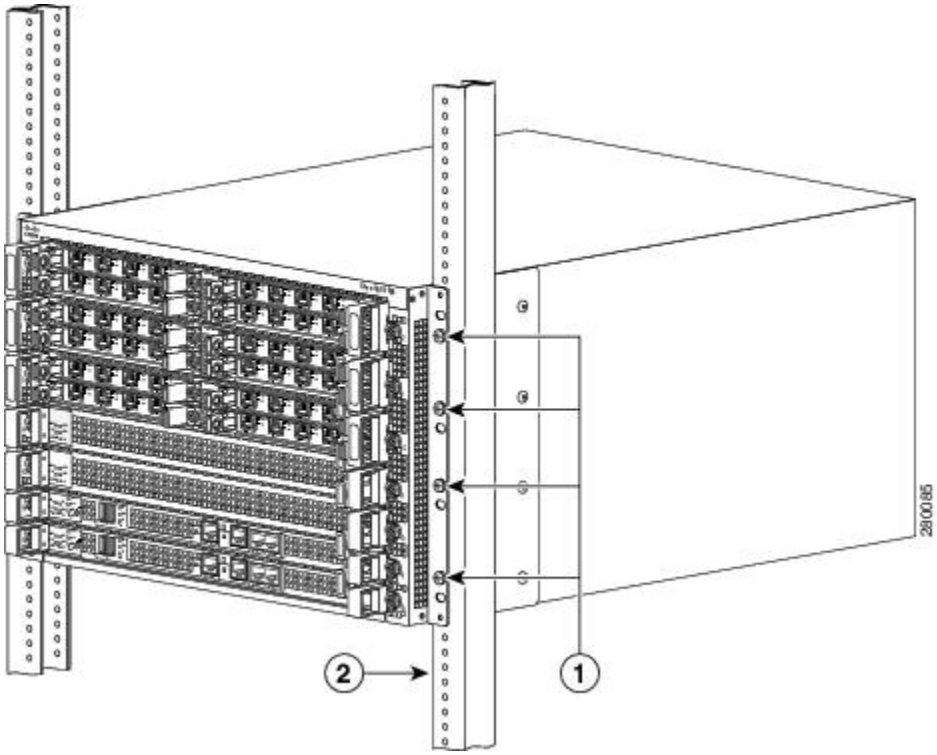

1	Cisco ASR 1006 Router front rack-mount bracket	2	Two-post equipment rack rail

Note Inner clearance (the width between the inner sides of the two posts or rails) must be at least 19 inches (48.26 cm). The height of the chassis is 10.45 inches (26.543 cm). Airflow through the chassis is from front to back.

Caution If you are using a two-post rack secure the rack to the floor surface to prevent tipping and avoid bodily injury and component damage.

SUMMARY STEPS

1. Position the chassis so the front is closest to you and lift it carefully into the rack. To prevent injury, avoid any sudden twists or moves.
2. Slide the chassis into the rack, pushing it back until the brackets meet the mounting strips or posts on both sides of the rack.
3. Keeping the brackets flush against the posts or mounting strips, align the holes in the brackets with the holes on the rack or mounting strip.
4. For each bracket, insert and tighten two screws to the rack on both sides.

DETAILED STEPS

Step 1 Position the chassis so the front is closest to you and lift it carefully into the rack. To prevent injury, avoid any sudden twists or moves.

Step 2 Slide the chassis into the rack, pushing it back until the brackets meet the mounting strips or posts on both sides of the rack.

Step 3 Keeping the brackets flush against the posts or mounting strips, align the holes in the brackets with the holes on the rack or mounting strip.

Step 4 For each bracket, insert and tighten two screws to the rack on both sides.

Note Use the third hole up from the bottom of the rack-mount bracket and the third hole down from the top of the rack-mount bracket. See "Installing the Cable-Management Bracket" figure in the *Attaching the Cable-Management Brackets* section for position and location of the ear holes on the rack-mount bracket.

What to do next

This completes the procedure for installing the chassis in a two-post rack. Proceed to the Attaching a Chassis Ground Connection, on page 136 to continue the installation.

Four-Post Rack Installation

The Cisco ASR 1006 Router can be flush-mounted in a 19-inch equipment rack using the rack-mounting kit provided with your system. The Cisco ASR 1006 Router can be mounted into the rack using two recommended methods:

- Installing the chassis in an existing rack with equipment.
- Installing an empty chassis in a rack with no equipment installed.

The following image shows the router installed on a four-post rack.

Figure 40: Installing the Cisco ASR 1006 Router in a Four-Post Equipment Rack

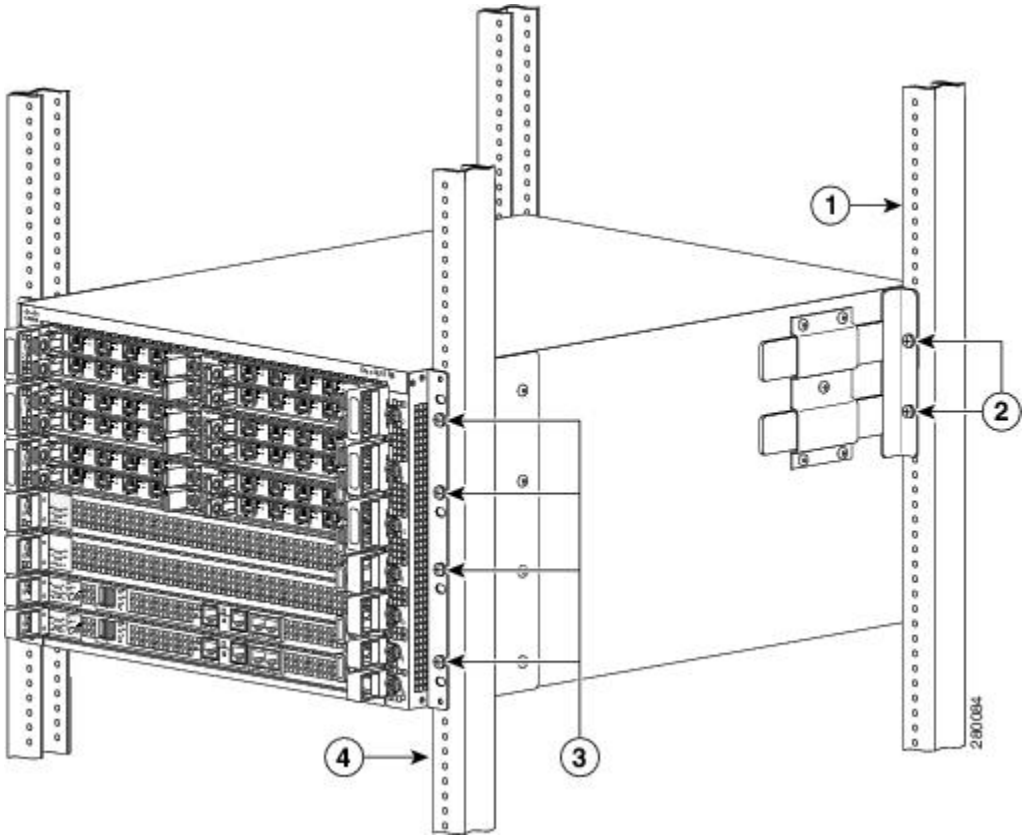

1	Four-post equipment rack rear rail	3	Cisco ASR 1006 front rack-mount brackets
2	Cisco ASR 1006 rear rack-mount brackets	4	Four-post equipment rack front rail

When handling the chassis, always follow proper lifting practices. See the "Chassis-Lifting Guidelines" section on page 5-23 .

Note Inner clearance (the width between the inner sides of the two posts or rails) must be at least 19 inches (48.26cm). The height of the chassis is 10.45 inches (26.543 cm). Airflow through the chassis is from front to back.

Note Make sure the rack is stabilized.

SUMMARY STEPS

1. (Optional) Install a shelf in the rack to support the Cisco ASR 1006 Router. If you are using a shelf then raise the chassis to the level of the shelf. Let the bottom of the chassis rest on the brackets, but continue to support the chassis.Using two people, lift the chassis into the rack using the side handles and grasping underneath the power supply bays.

2. Position the chassis until the rack-mounting flanges are flush against the mounting rails on the rack.
3. Hold the chassis in position against the mounting rails while the second person finger-tightens a screw to the rack rails on each side of the chassis.
4. Finger-tighten 4 more screws to the rack rails on each side of the chassis.
5. Tighten all screws on each side to secure the chassis to the equipment rack.
6. Use a level to verify that the tops of the two brackets are level, or use a measuring tape to verify that both brackets are the same distance from the top of the rack rails.

DETAILED STEPS

Step 1 (Optional) Install a shelf in the rack to support the Cisco ASR 1006 Router. If you are using a shelf then raise the chassis to the level of the shelf. Let the bottom of the chassis rest on the brackets, but continue to support the chassis.Using two people, lift the chassis into the rack using the side handles and grasping underneath the power supply bays.

Step 2 Position the chassis until the rack-mounting flanges are flush against the mounting rails on the rack.

Note Use the third hole up from the bottom of the rack-mount bracket and the third hole down from the top of the rack-mount bracket. See “Installing the Cable-Management Bracket” figure in the *Attaching the Cable-Management Brackets* section for position and location of the ear holes on the rack-mount bracket.

Step 3 Hold the chassis in position against the mounting rails while the second person finger-tightens a screw to the rack rails on each side of the chassis.

Step 4 Finger-tighten 4 more screws to the rack rails on each side of the chassis.

Step 5 Tighten all screws on each side to secure the chassis to the equipment rack.

Step 6 Use a level to verify that the tops of the two brackets are level, or use a measuring tape to verify that both brackets are the same distance from the top of the rack rails.

What to do next

This completes the procedure for installing the chassis in the rack. Proceed to the Attaching the Cable-Management Brackets, on page 134 to continue the installation.

Attaching the Cable-Management Brackets

The cable-management brackets are mounted on each rack-mount bracket on the chassis to provide cable management to both sides of the chassis (parallel with card orientation). These brackets are screw mounted to the rack-mount brackets to allow easy installation and removal of cables.

The cable-management brackets for the Cisco ASR 1006 Router contain five independent cable-management “U” type features with four screws and provides cable dressing of each card module slots. For Cisco ASR 1000 SIPs, these brackets work in tandem with shared port adapter product feature cable-management device to allow installation and removal of adjacent cards without having to remove cables.



Note Make certain that the cable-management bracket “U” type feature is facing upwards when you attach it to the chassis.

Follow these steps to attach the cable-management brackets to both sides of the Cisco ASR 1006 Router in the rack:

SUMMARY STEPS

1. Align the cable-management bracket to the rack-mount bracket on one side of the Cisco ASR 1006 Router. The cable-management bracket aligns to the top hole of the chassis rack-mount bracket.
2. Using a Phillips screwdriver, insert the screw through the cable-management bracket and into the rack-mount bracket and then tighten the screw.
3. Using the bottom rack-mount ear hole, insert the screw through the cable-management bracket and into the rack-mount bracket.

DETAILED STEPS

Step 1 Align the cable-management bracket to the rack-mount bracket on one side of the Cisco ASR 1006 Router. The cable-management bracket aligns to the top hole of the chassis rack-mount bracket.

Step 2 Using a Phillips screwdriver, insert the screw through the cable-management bracket and into the rack-mount bracket and then tighten the screw.

Note Use a screw from the package of four screws.

Step 3 Using the bottom rack-mount ear hole, insert the screw through the cable-management bracket and into the rack-mount bracket.

The following image shows the cable-management bracket attached to the chassis in a rack.

Figure 41: Installing the Cable-Management Bracket

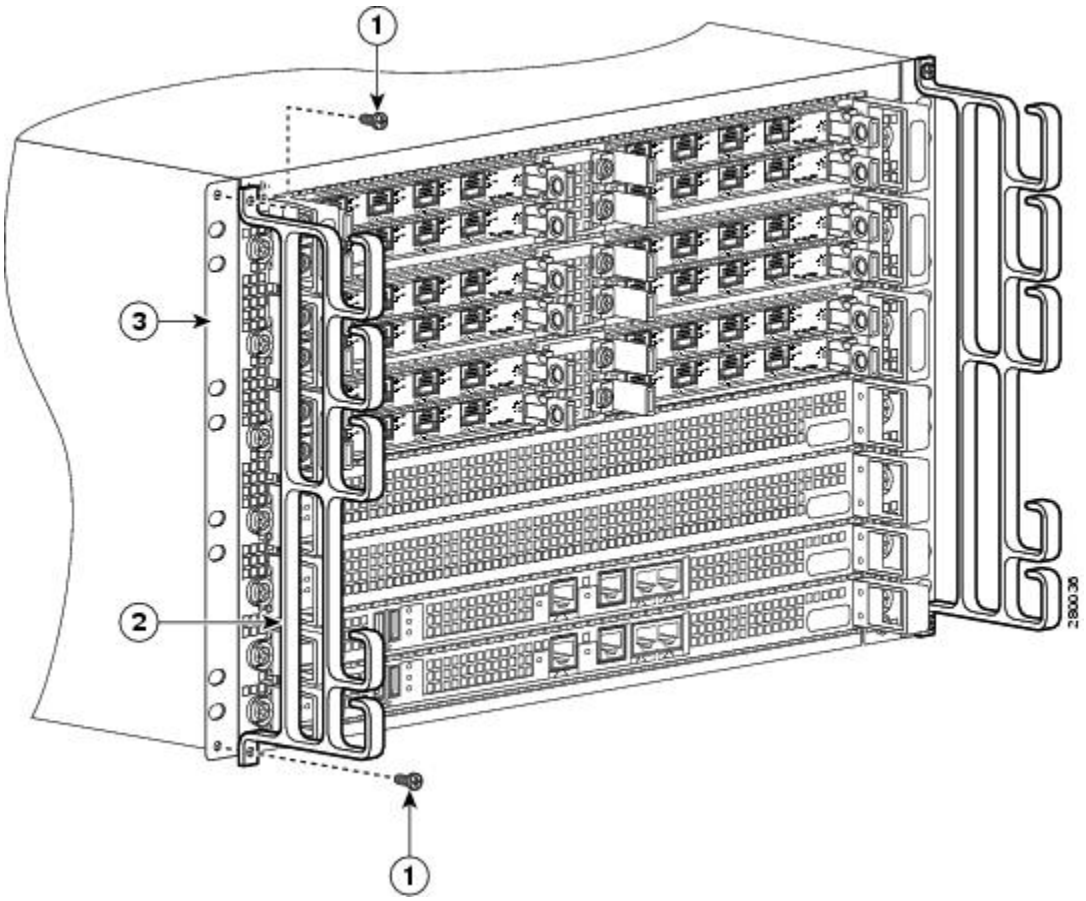

1	Cable-management bracket screw location	3	Chassis front rack-mount bracket and ear holes
2	Cable-management bracket	—	—

What to do next

This completes the procedure for installing the cable-management brackets on the chassis.

Attaching a Chassis Ground Connection

Connecting the Cisco ASR 1006 Router chassis to ground is required for all DC powered installations and any AC powered installation where compliance with Telcordia grounding requirements is necessary.

Caution The dual-lug chassis stud must be installed, the SIP and SPA must be fully inserted and screwed in and earthed to prevent a potential hazard in a telecom line.

Have the recommended tools and supplies available before you begin this procedure.

The following image shows how to attach the ground lugs on the Cisco ASR 1006 chassis.

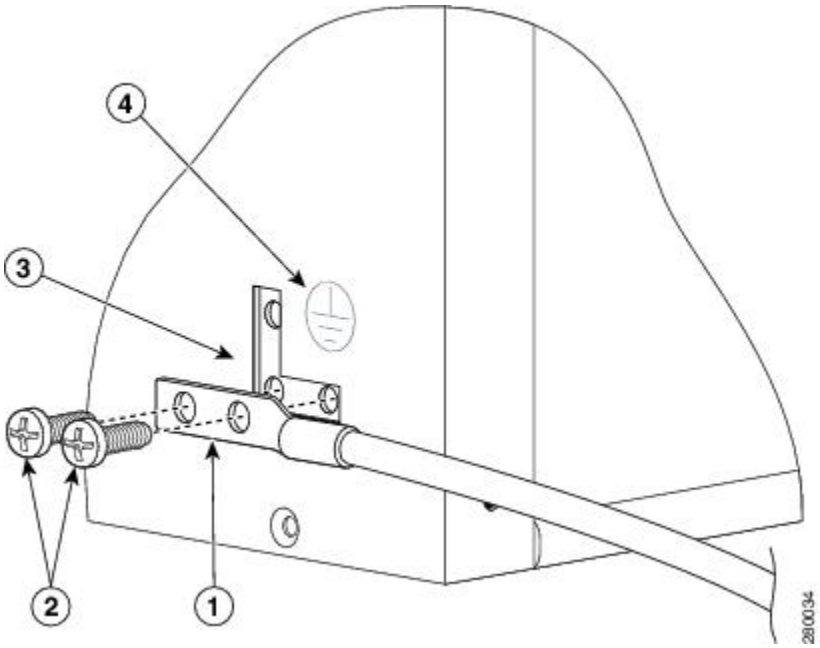

1	Chassis ground studs and lead wire	3	Ground connector on the chassis
2	Grounding screws	4	Ground symbol

Warning This equipment must be grounded. Never defeat the ground conductor or operate the equipment in the absence of a suitably installed ground conductor. Contact the appropriate electrical inspection authority or an electrician if you are uncertain that suitable grounding is available. Statement 1024

Before you connect power or turn on power to your chassis, you must provide an adequate chassis ground (earth) connection for the chassis. A chassis ground connector is provided on each Cisco ASR 1006 Router. There is a stud on the side of the chassis and on the DC power supply (primary grounding stud).

Caution The grounding wire is always the first to be installed or connected and the last to be removed or disconnected.

Recommended Tools and Supplies

The following tools, equipment, and supplies necessary to connect the system ground to the chassis:

- Phillips screwdriver
- Dual-lug chassis ground component
- Grounding wire

Use the following procedure to attach the grounding lug to the chassis ground connector on your chassis:

SUMMARY STEPS

1. Use the wire stripper to strip one end of the AWG #6 wire approximately 0.75 inches (19.05 mm).
2. Insert the AWG #6 wire into the wire receptacle on the grounding lug.
3. Use the crimping tool to carefully crimp the wire receptacle around the wire; this step is required to ensure a proper mechanical connection.
4. Attach the grounding lug with the wire so that the grounding wire does not overlap the power supply (see Figure 42: Attaching a Grounding Lug to the Chassis Ground Connector, on page 138).
5. Locate the chassis ground connector on the side of your chassis.
6. Insert the two screws through the holes in the grounding lug.
7. Use the Number 2 Phillips screwdriver to carefully tighten the screws until the grounding lug is held firmly to the chassis. Do not overtighten the screws.
8. Connect the opposite end of the grounding wire to the appropriate grounding point at your site to ensure an adequate chassis ground.

DETAILED STEPS

Step 1 Use the wire stripper to strip one end of the AWG #6 wire approximately 0.75 inches (19.05 mm).

Step 2 Insert the AWG #6 wire into the wire receptacle on the grounding lug.

Step 3 Use the crimping tool to carefully crimp the wire receptacle around the wire; this step is required to ensure a proper mechanical connection.

Step 4 Attach the grounding lug with the wire so that the grounding wire does not overlap the power supply (see Figure 42: Attaching a Grounding Lug to the Chassis Ground Connector, on page 138).

Figure 42: Attaching a Grounding Lug to the Chassis Ground Connector

1	Chassis ground lead wire	3	Ground screws
2	Grounding stud	4	Chassis ground connector holes

Step 5 Locate the chassis ground connector on the side of your chassis.

Step 6 Insert the two screws through the holes in the grounding lug.

Step 7 Use the Number 2 Phillips screwdriver to carefully tighten the screws until the grounding lug is held firmly to the chassis. Do not overtighten the screws.

Step 8 Connect the opposite end of the grounding wire to the appropriate grounding point at your site to ensure an adequate chassis ground.

What to do next

This completes the procedure for attaching a chassis ground connection. Go to the following cabling sections for information on attaching cables.

Connecting the Shared Port Adapter Cables

The instructions for connecting the cables for the shared port adapter installed in the Cisco ASR 1006 Router are contained in the respective configuration documents for each port adapter. For example, if you are connecting the optical fiber cables for the PA-POS-OC3 port adapter, see PA-POS-OC3 Port Adapter Installation and Configuration at the following location:

http://www.cisco.com/en/US/partner/docs/interfaces_modules/port_adapters/install_upgrade/pos/pa-pos-oc3_install_config/paposoc3.html

Shared port adapter documents are also available on the Cisco Documentation DVD.

Connecting the Console and Auxiliary Port Cables

The Cisco ASR 1006 Router has a DCE-mode console port for connecting a console terminal and an auxiliary port for additional connections to your chassis. The auxiliary port can also be used for diagnostics. The following image shows the CON and AUX ports on the Cisco ASR 1000 Series route processor card.

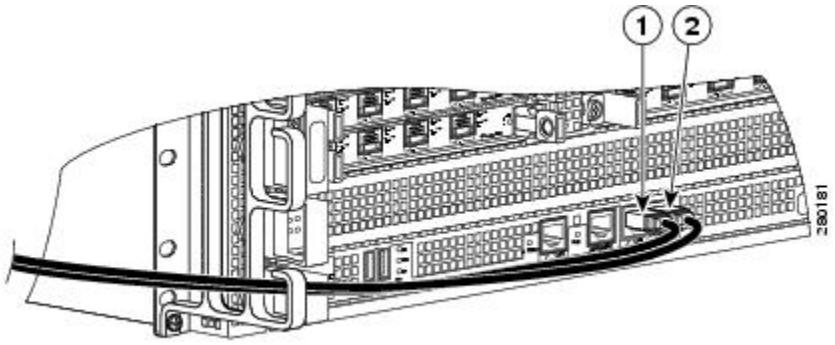

1	CON connector	2	AUX connector

The Cisco ASR 1006 Router uses RJ-45 ports for both the auxiliary port and the console port. Both the console and the auxiliary ports are asynchronous serial ports; any devices connected to these ports must be capable of asynchronous transmission.

Note A connection will not be established when setting up an out-of-band connection or modem connection in the auxiliary port and the console port.

For console and auxiliary port pinouts for the RJ-45 connector, see Appendix A, “Cisco ASR 1006 Router Specifications.” Both ports are configured as asynchronous serial ports.

SUMMARY STEPS

1. Before connecting a terminal to the console port, configure the terminal to match the chassis console port as follows: 9600 baud, 8 data bits, no parity, 1 stop bits (9600 8N1).
2. After you establish normal router operation, you can disconnect the terminal.

DETAILED STEPS

Step 1 Before connecting a terminal to the console port, configure the terminal to match the chassis console port as follows: 9600 baud, 8 data bits, no parity, 1 stop bits (9600 8N1).

Step 2 After you establish normal router operation, you can disconnect the terminal.

Connecting the Ethernet Management Port Cable

When using the Fast Ethernet Management port in the default mode (speed-auto and duplex-auto) the port operates in auto-MDI/MDI-X mode. The port automatically provides the correct signal connectivity through the Auto-MDI/MDI-X feature. The port automatically senses a crossover or straight-through cable and adapts to it.

However, when the Fast Ethernet Management port is configured to a fixed speed (10 or 100 Mbps) through command-line interface (CLI) commands, the port is forced to MDI mode.

When in a fixed-speed configuration and MDI mode:

- Use a crossover cable to connect to an MDI port
- Use a straight-through cable to connect to an MDI-X port

Connecting Power to the Cisco ASR 1006 Router

Warning The covers are an integral part of the safety design of the product. Do not operate the unit without the covers installed. Statement 1077

Warning When you install the unit, the ground connection must always be made first and disconnected last. Statement 1046

Warning Before performing any of the following procedures, ensure that power is removed from the DC circuit. Statement 1003

Warning Only trained and qualified personnel should be allowed to install, replace, or service this equipment. Statement 1030

This section describes the procedure to connect AC input and DC input power to your Cisco ASR 1006 Router.

The DC power supply for the Cisco ASR 1006, ASR 1004, ASR 1002, and ASR 1013 routers operate at individual specifications. The following table shows the common input ranges and circuit breaker requirements.

Table 50: Cisco ASR 1000 Series Router DC Power Supply System Input Requirements

Cisco ASR 1000 Series Router DC Power Supply	System Input Rating (Amps)	Circuit Breaker Amps	AWG # Wire		
		Minimum	Maximum	Minimum	Maximum
Cisco ASR 1006	40	Always 50	Always AWG #6 wire		
Cisco ASR 1004	24	30	40	10	8
Cisco ASR 1002	16	20	30	12	10
Cisco ASR 1013	40	Always 50	Always AWG #6 wire		
For example, the Cisco ASR 1002 Router DC power supply, with 16 Amp input rating must use an AWG #12 gauge wire for a 20 A circuit breaker and an AWG #10 gauge wire for a 30 A circuit breaker.					

Power Cords Supported by the Cisco ASR 1006 Router

The following power cords are supported by the Cisco ASR 1006 Router:

- CAB-AC20A-90L-IN—20 A AC right-angle power cord—International
- CAB-4000W-US1—Power cord, 250 VAC 20 A, Right Angle C19, NEMA 6-20 Plug, US
- CAB-US520-C19-US—NEMA 5-15 to IEC-C19 14ft US

The Cisco ASR 1006 Router modular chassis supports redundant power entry modules (PEMs). In the Cisco ASR 1006 Router, at least one PEM must be functioning. In the event that one of the fans fails, the remaining fans are sufficient to cool the entire chassis. However, fan speed may have to be increased. For power consumption specifications, see the "Cisco ASR 1006 Router Specifications" section on page A-1 .

Note At least one power supply must be powered on before the software is started.

Note All Cisco ASR 1000 Series Router AC power supplies must be connected to a branch circuit that does not exceed 20 A.

Note Detailed instructions for removing and replacing the Cisco ASR 1000 Series AC and DC power supplies are provided in "Removing and Replacing the Cisco ASR 1006 Router Power Supplies" section on page 14-55 .

Connecting AC Input Power to Cisco ASR 1006 Router

Follow these steps to connect an AC-input power supply to the Cisco 1006 chassis:

SUMMARY STEPS

1. At the rear of the chassis, check whether the power switch on the power supply is in the Standby position.
2. Plug the power cable into the inlet.

DETAILED STEPS

Step 1 At the rear of the chassis, check whether the power switch on the power supply is in the Standby position.

Step 2 Plug the power cable into the inlet.

Note For additional AC power cable strain relief, secure the cable to the power supply handle by inserting a nylon cable tie through the hole in the handle and around the cable.

The following image shows the ASR1006-PWR-AC power supply of the Cisco ASR 1006 Router.

Figure 43: Cisco ASR 1006 Router AC Power Supply (ASR1006-PWR-AC)

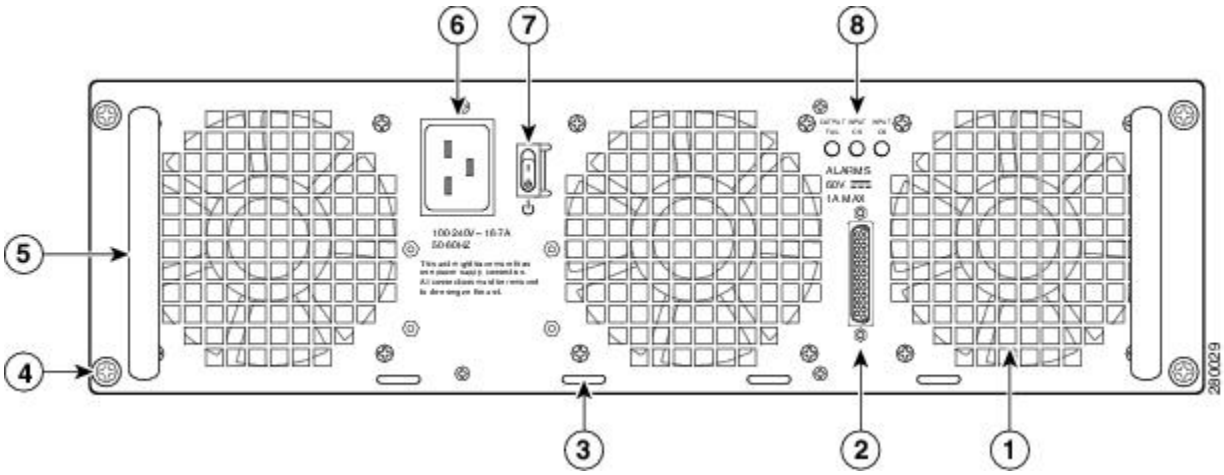

1	AC power supply fan	5	AC power supply handle
2	DB-25 alarm connector	6	AC power inlet
3	Tie-wrap tab	7	AC power supply Standby switch
4	AC power supply captive screw	8	AC power supply LEDs

The following image shows the ASR1013/06-PWR-AC power supply of the Cisco ASR 1006 Router.

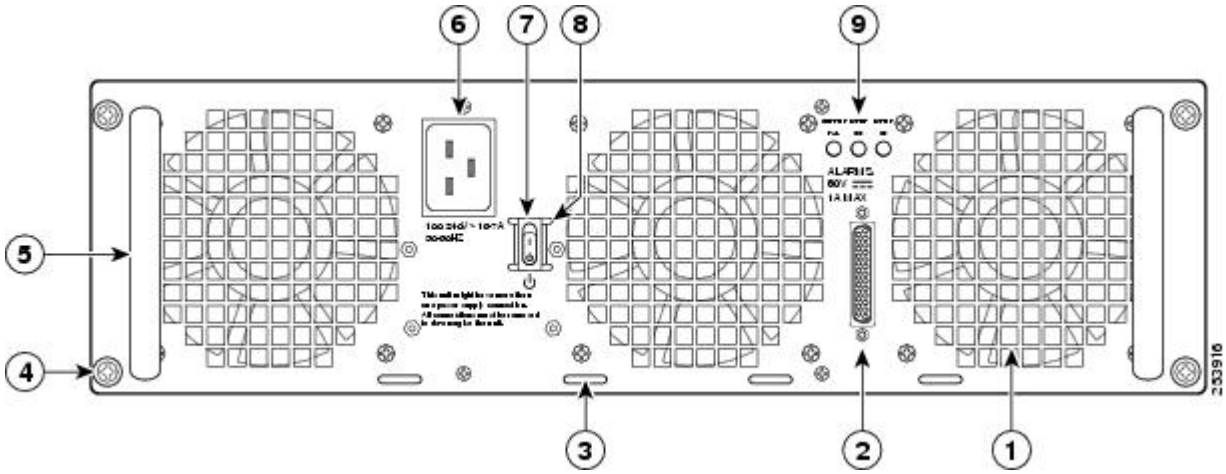

1	AC power supply fan	6	AC power inlet
2	DB-25 alarm connector	7	AC power supply Standby switch
3	Tie-wrap tab	8	Protective shielding on both sides of the Standby switch
4	AC power supply captive screw	9	AC power supply LEDs
5	AC power supply handle		

What to do next

Plug the AC power supply cable into the AC power source.

This completes the procedure for connecting AC-input power.

Connecting DC Input Power to Cisco ASR 1006 Router

This section describes how to connect the DC power supply into the Cisco ASR 1006 Router. The followoing image shows the ASR1006-PWR-DC power supply of the Cisco ASR 1006 Router.

Figure 44: Cisco ASR 1006 Router DC Power Supply (ASR1006-PWR-DC)

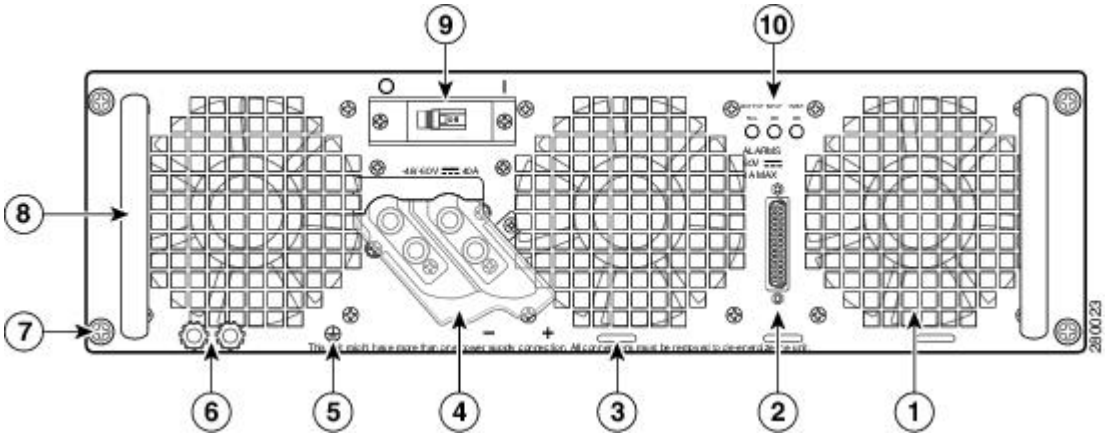

1	Fans	6	DC power supply ground lugs
2	DB-25 alarm connector	7	DC power supply captive screws
3	Tie-wrap tabs	8	DC power supply handle
4	DC power supply terminal and plastic cover	9	DC power supply On (|) /Off (O) switch
5	Grounding symbol	10	DC power supply LEDs

The following image shows the ASR1013/06-PWR-DC power supply of the Cisco ASR 1006 Router.

Figure 45: Cisco ASR 1006 Router –48 VDC Power Supply (ASR1013/06-PWR-DC)

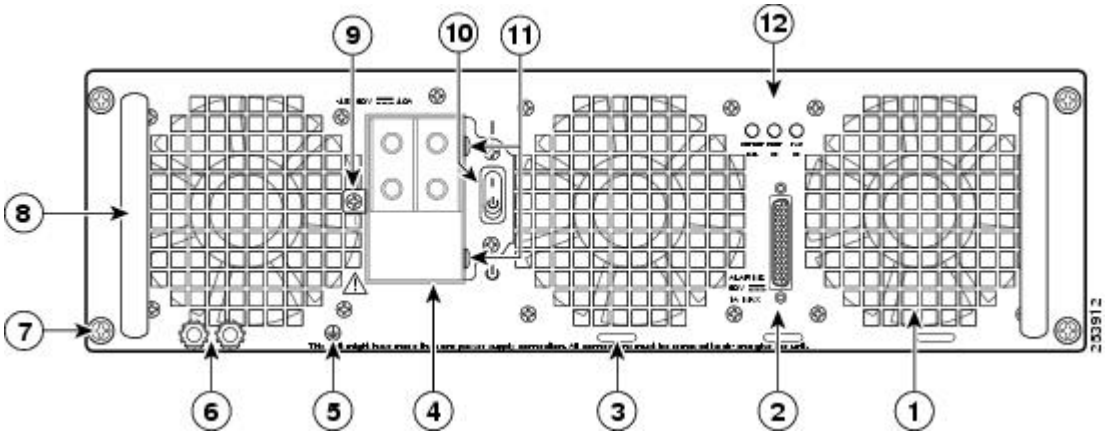

1	Fan	7	DC power supply captive screw
2	DB-25 alarm connector	8	DC power supply handle
3	Tie-wrap tab	9	Terminal block and plastic cover single screw
4	DC power supply terminal block and plastic cover	10	On/Off (|/O) circuit breaker switch
5	Ground symbol	11	Terminal block and plastic cover slot tab

6	DC power supply ground studs	2	Power supply LEDs

Note Shielded cables must be used to connect to the DB-25 alarm connector on both the AC and DC power supplies in order to comply with the FCC/EN55022/CISPR22 Class A emissions requirements. See the "How Cisco ASR1000-RP Alarm Monitoring Works" section on page 2-22 .

Before you begin the procedure to connect DC input power, read these important notices:

- The color coding of the DC input power supply leads depends on the color coding of the DC power source at your site. Typically, green or green/yellow is used for ground (GND), black is used for –48 V on negative (–) terminal, and red is used for RTN on the positive (+) terminal. Make certain the lead color coding you choose for the DC input power supply matches the lead color coding used at the DC power source.
- For DC input power cables, select the appropriate wire gauge based on the National Electrical Code (NEC) and local codes for 40-amp service at nominal DC input voltage (–48/–60 VDC). Three pairs of cable leads, source DC (–) and source DC return (+), are required for each power distribution unit (PDU). These cables are available from any commercial cable vendor. All input power cables for the chassis should have the same wire gauge and cable lengths should match within 10 percent of deviation.

Each DC input power cable is terminated at the PDU by a cable lug. The cable lugs must be dual-hole, and have a straight tongue. They must be able to fit over 1/4-inch terminal studs at 0.625-inch (15.88-mm) centers.

Note DC input power cables must be connected to the PDU terminal studs in the proper positive (+) and negative (–) polarity. In some cases, the DC cable leads are labeled, which is a relatively safe indication of the polarity. However, you must verify the polarity by measuring the voltage between the DC cable leads. When making the measurement, the positive (+) lead and the negative (–) lead must always match the (+) and (–) labels on the power distribution unit.

- A ground cable is required for each DC PDU. We recommend that you use at least 6-AWG multistrand copper wire. This wire is not available from Cisco Systems; it is available from any commercial cable vendor.

The ground wire cable lug should be dual-hole (see Figure 46: DC Input Power Cable Lug , on page 146) and able to fit over M6 terminal studs at 0.625 inch (15.88mm) centers. Recommended lug terminal wire size Panduit part number:

- • LCD8-14A-L for 8AWG wire size
  • LCD6-14A-L for 6AWG wire size

Figure 46: DC Input Power Cable Lug

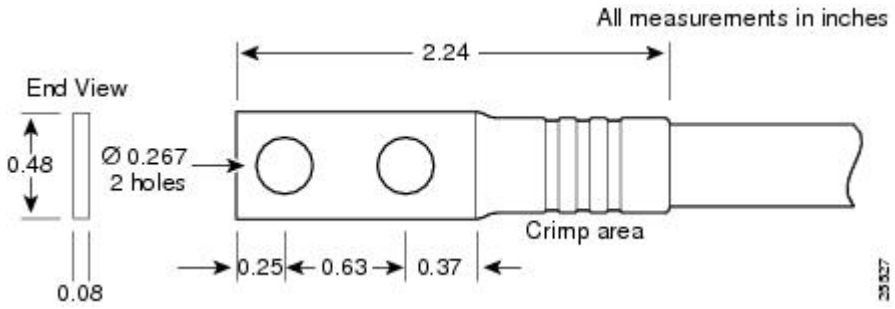

Note To avoid hazardous conditions, all components in the area where DC input power is accessible must be properly insulated. Therefore, before installing the DC cable lugs, be sure to insulate the lugs according to the manufacturer's instructions.

Warning When you install the unit, the ground connection must always be made first and disconnected last. Statement 1046

To connect the DC power supply, follow these steps:

SUMMARY STEPS

1. Make certain that the chassis grounding is connected before you begin installing the DC power supply.
2. Locate the stud on the DC power supply for the **GND** connection which must be connected first and follow these steps:
3. Attach the other end of the cable to the site's ground connection.
4. Remove the plastic cover from the terminal block.
5. Wrap the positive and negative lead cables with sleeving. Take each lead wire and cover the area from the lug to the wire with heavy shrink sleeving.
6. For easier cable management, insert the negative lead cable first. Replace the ground lug with cable in the following order:
7. Tighten the Kepnut screw to recommended torque of 18 in-lbs minimum to 22 in-lbs maximum for the positive stud and wire.
8. Use tie wraps to secure the wires, so that the wires are not pulled from the terminal block by casual contact. Ti-wrap studs are located below the power supply terminal block (see Figure 49: Cisco ASR 1006 Router DC Power Supply (ASR1006-PWR-DC) Terminal Block Plastic Cover, on page 149).
9. Replace the terminal block plastic cover and tighten the screw. The plastic cover is slotted and keyed to fit correctly over the terminal block.
10. Remove the tape from the circuit-breaker switch handle, and move the circuit-breaker handle to the On position.
11. Move the circuit breaker switch to the On position.

DETAILED STEPS

Step 1 Make certain that the chassis grounding is connected before you begin installing the DC power supply.

Step 2 Locate the stud on the DC power supply for the **GND** connection which must be connected first and follow these steps:

a) Using the grounding lug, replace the washers and Kepnut screw in the following order.

- • Flat washer
  - • Grounding cable lug
  - • Kepnut screw

b) Tighten the Kepnut screws on the power supply studs.

Step 3 Attach the other end of the cable to the site's ground connection.

Step 4 Remove the plastic cover from the terminal block.

Caution Before you continue to install the terminal block ground wires, stop and perform Step 5. To prevent any contact with metal lead on the ground wire and the plastic cover.

Step 5 Wrap the positive and negative lead cables with sleeving. Take each lead wire and cover the area from the lug to the wire with heavy shrink sleeving.

The following image shows the ASR1006-PWR-DC power supply for the Cisco ASR 1006 Router.

Figure 47: Cisco ASR 1006 Router DC Power Supply (ASR1006-PWR-DC) Terminal Block Ground Cable Lugs

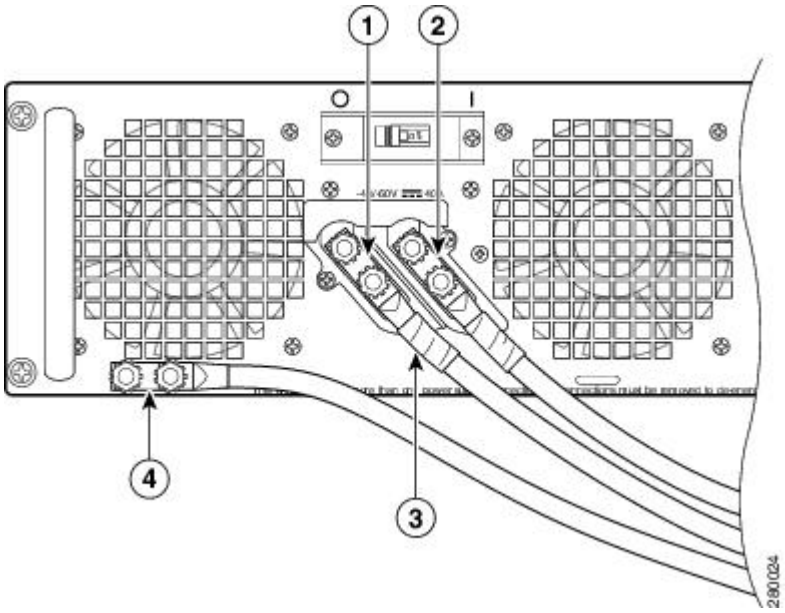

1	Negative lug and wire with sleeving wrapped around the wire and end of lug	3	Location of sleeving wrapped around the wire and end of the grounding stud
2	Positive lug and wire with sleeving wrapped around the wire and end of lug	4	Ground lug and wire

The followng image shows the ASR1013/06-PWR-DC power supply for the Cisco ASR 1006 Router.

Figure 48: Cisco ASR 1006 Router DC Power Supply (ASR1013/06-PWR-DC) Terminal Block Ground Cable Lugs

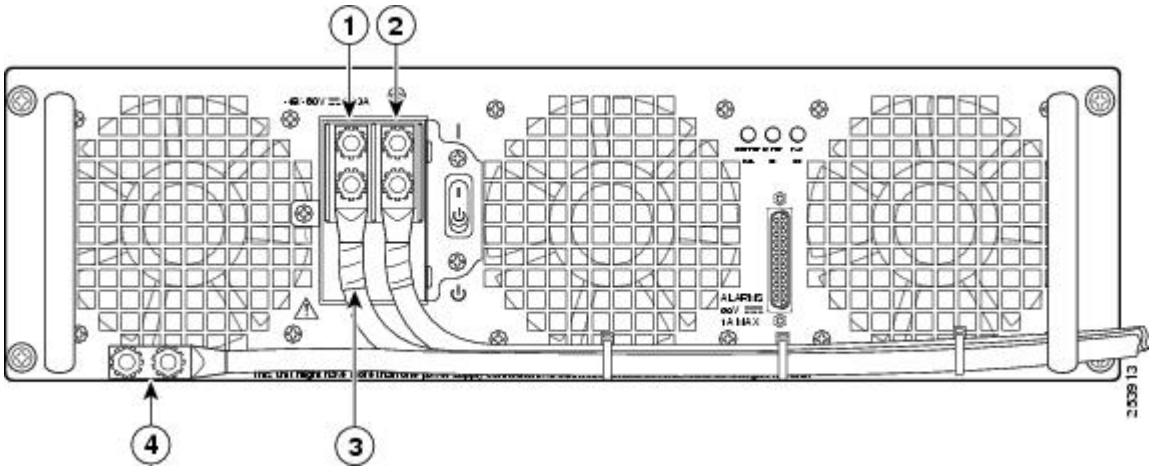

1	Negative lug and wire with sleeving wrapped around the wire and end of lug	3	Location of sleeving wrapped around the wire and end of the grounding stud
2	Positive lug and wire with sleeving wrapped around the wire and end of lug	4	Ground lug and wire

Step 6 For easier cable management, insert the negative lead cable first. Replace the ground lug with cable in the following order:

a) Flat Washer
b) Ground lug with negative wire
c) Kepnut screw

Step 7 Tighten the Kepnut screw to recommended torque of 18 in-lbs minimum to 22 in-lbs maximum for the positive stud and wire.

Note Secure the wires coming in from the terminal block so that they cannot be disturbed by casual contact.

Step 8 Use tie wraps to secure the wires, so that the wires are not pulled from the terminal block by casual contact. Ti-wrap studs are located below the power supply terminal block (see Figure 49: Cisco ASR 1006 Router DC Power Supply (ASR1006-PWR-DC) Terminal Block Plastic Cover, on page 149).

Step 9 Replace the terminal block plastic cover and tighten the screw. The plastic cover is slotted and keyed to fit correctly over the terminal block.

The followng image shows the ASR1006-PWR-DC power supply for the Cisco ASR 1006 Router.

Figure 49: Cisco ASR 1006 Router DC Power Supply (ASR1006-PWR-DC) Terminal Block Plastic Cover

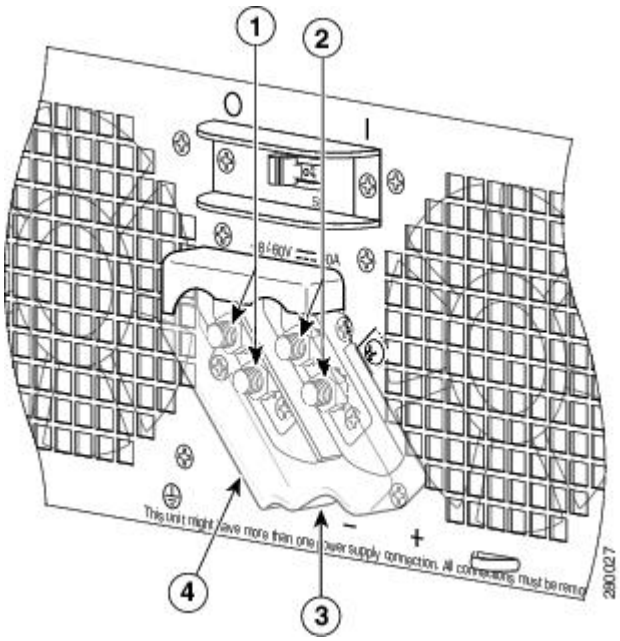

1	Negative lead	3	Plastic cover slotted area
2	Positive lead	4	Terminal block plastic cover

The following image shows the ASR1013/06-PWR-DC power supply for the Cisco ASR 1006 Router.

Figure 50: Cisco ASR 1006 Router DC Power Supply (ASR1013/06-PWR-DC) Terminal Block and Plastic Cover

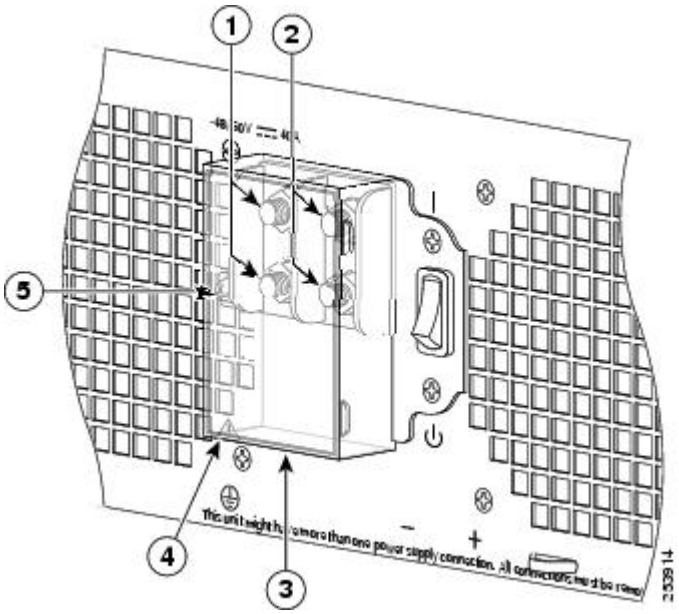

1	Negative terminal	4	Plastic cover slotted area

2	Positive terminal	5	Terminal block plastic cover single screw
3	Terminal block plastic cover		

Step 10 Remove the tape from the circuit-breaker switch handle, and move the circuit-breaker handle to the On position.

Step 11 Move the circuit breaker switch to the On position.

What to do next

This completes the procedure for connecting the DC power supply in the Cisco ASR 1006 Router.

Connecting a Terminal to the Cisco ASR 1000 Series RP Console Port

The Cisco ASR 1006 route processor has an asynchronous serial (EIA/TIA-232) RJ-45 console port labeled CON on its front panel. You can connect this port to most types of video terminals through use of the console cable kit that is included with your Cisco ASR 1006 Router. The console cable kit contains:

- One RJ-45 to RJ-45 crossover cable
- One RJ-45 to DB-25 (female) adapter
- One RJ-45 to DB-9 (female) adapter

A crossover cable reverses pin connections from one end to the other. In other words, it connects pin 1 (at one end) to pin 8 (at the other end), pin 2 to pin 7, pin 3 to pin 6, and so on. You can identify a crossover cable by comparing the two modular ends of the cable. Hold the cable ends in your hand, side-by-side, with the tabs at the back. Ensure that the wire connected to the outside (left) pin of the left plug (pin 1) is the same color as the wire connected to the outside (right) pin of the right plug (pin 8).

Use the following procedure to connect a video terminal to the console port on a route processor.

Note Each Cisco ASR 1000 Series Route Processor must have a console port connection (typically to a terminal server) if you are running a redundant configuration in the chassis.

SUMMARY STEPS

1. Connect one end of the RJ-45 cables to the serial RJ-45 port (CON) on the Cisco ASR 1000 Series Route Processor 1 (see the following image).
2. Run the cable up and through the cable-management bracket and connect the other end of the RJ-45 cable to the RJ-45 adapter (see the following image).
3. Connect the adapter to your video terminal to complete the cable connection.
4. Power on your video terminal.
5. Configure your video terminal to match the following default console port settings: 9600 baud, 8 data bits, No parity generation or checking, 1 stop bit, and No flow control.
6. Go to the Connecting the System Cables, on page 152 to continue the installation.

DETAILED STEPS

Step 1 Connect one end of the RJ-45 cables to the serial RJ-45 port (CON) on the Cisco ASR 1000 Series Route Processor 1 (see the following image).

Figure 51: Console Port Connection on the ASR 1000 Series Route Processor

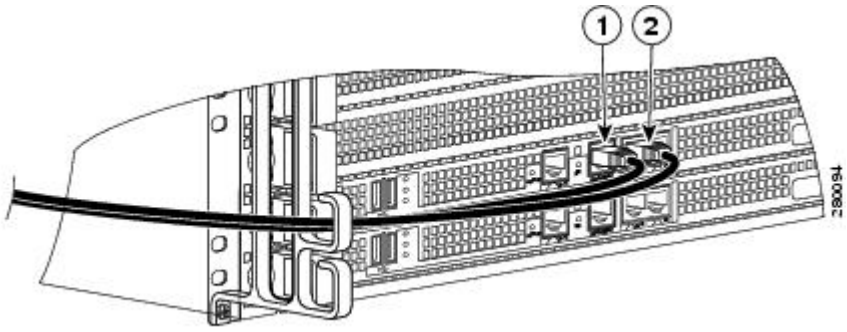

1	CONsole port	2	AUXiliary port

Step 2 Run the cable up and through the cable-management bracket and connect the other end of the RJ-45 cable to the RJ-45 adapter (see the following image).

Figure 52: Cable-Management Bracket with Cabling in the Cisco ASR 1006 Router

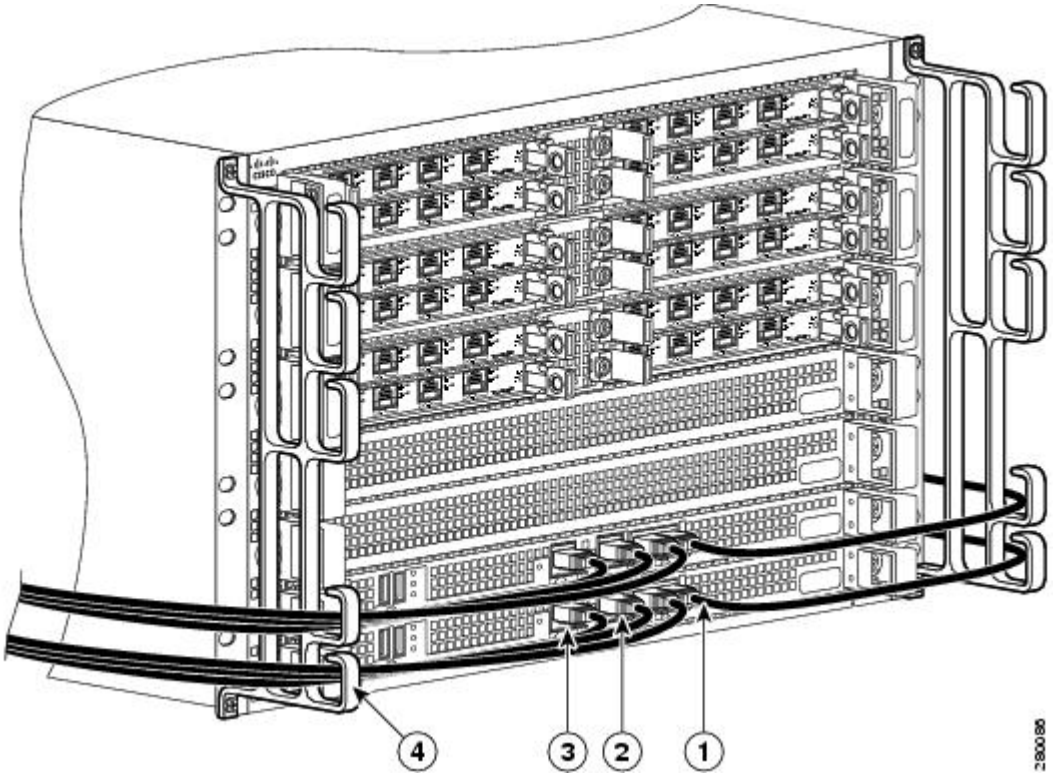

1	AUXiliary connection	3	BITS port
2	MGMT Ethernet port	4	Cable-management U feature device

Step 3 Connect the adapter to your video terminal to complete the cable connection.

Step 4 Power on your video terminal.

Step 5 Configure your video terminal to match the following default console port settings: 9600 baud, 8 data bits, No parity generation or checking, 1 stop bit, and No flow control.

Step 6 Go to the Connecting the System Cables, on page 152 to continue the installation.

Connecting the System Cables

Keep the following guidelines in mind when connecting external cables to the Cisco ASR 1006 Router:

- To reduce the chance of interference, avoid crossing high-power lines with any interface cables.
- Verify all cabling limitations (particularly distance) before powering on the system.

Attaching Cable Retention Bracket on AC Power Supply

This section explains how to attach the cable retention bracket on AC power supply of the chassis.

The following shows the cable retention bracket attaching to the AC power supply.

Figure 53: Cable Retention Bracket Attaching to the AC Power Supply

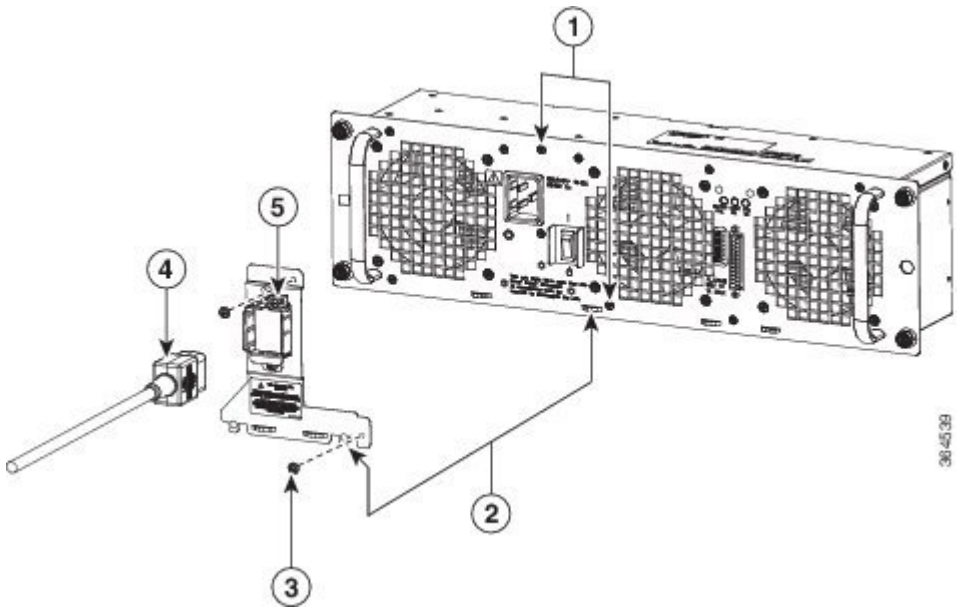

SUMMARY STEPS

1. Remove the two M3X5mm screws and discard.
2. Install AC cord retainer by inserting tabs into lance features on panel.
3. Secure AC cord retainer with two M3X8mm screws included in kit.
4. Connect AC power cord.
5. Secure AC cord by tightening retainer screw.

DETAILED STEPS

Step 1 Remove the two M3X5mm screws and discard.

Step 2 Install AC cord retainer by inserting tabs into lance features on panel.

Step 3 Secure AC cord retainer with two M3X8mm screws included in kit.

Step 4 Connect AC power cord.

Step 5 Secure AC cord by tightening retainer screw.

What to do next

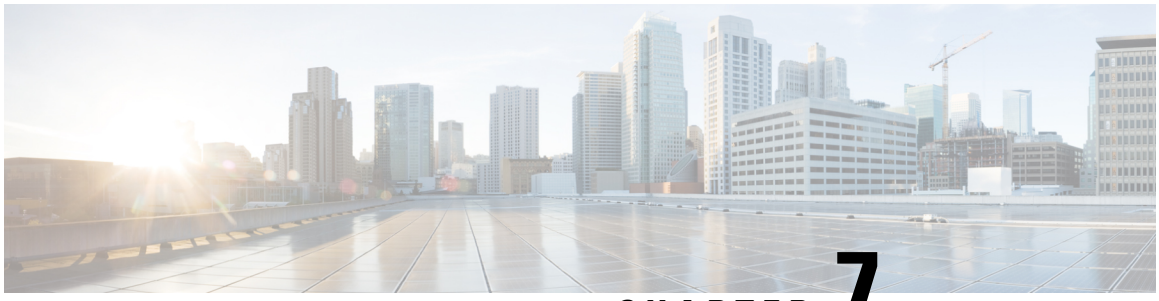

CHAPTER 7

Cisco ASR 1004 Router Overview and Installation

This chapter describes the Cisco ASR 1004 Router and the procedures for installing the Cisco ASR 1004 Router on an equipment shelf or tabletop or in equipment racks. It also describes how to connect interface and power cables.

This chapter contains the following sections:

Warning This warning symbol means danger. You are in a situation that could cause bodily injury. Before you work on any equipment, be aware of the hazards involved with electrical circuitry and be familiar with standard practices for preventing accidents. Use the statement number provided at the end of each warning to locate its translation in the translated safety warnings that accompanied this device. Statement 1071

Warning Before you install, operate, or service the system, read the *Regulatory Compliance and Safety Information for Cisco ASR 1000 Series Aggregation Services Routers* publication. This document provides important safety information you should know before working with the system. Statement 200

- Cisco ASR 1004 Router Description, on page 156
- Installation Methods, on page 159
- General Rack Installation Guidelines, on page 159
- Guidelines for an Equipment Shelf or Tabletop Installation, on page 161
- Equipment Shelf or Tabletop Installation, on page 161
- Rack-Mounting the Cisco ASR 1004 Router, on page 163
- Attaching the Chassis Rack-Mount Brackets, on page 165
- Installing the Cisco ASR 1004 Router in a Rack, on page 168
- Attaching a Chassis Ground Connection, on page 172
- Attaching the Cable-Management Bracket, on page 175
- Connecting the Shared Port Adapter Cables, on page 176
- Connecting the Console and Auxiliary Port Cables, on page 177
- Connecting Power to Cisco ASR 1004 Router, on page 178
- Connecting a Terminal to the Cisco ASR Series 1000 Route Processor Console Port, on page 184
- Connecting the Network Management and Signal System Cables, on page 186

Cisco ASR 1004 Router Description

The Cisco ASR 1004 Router system consists of the following system level components:

- Two Cisco ASR 1000 Series SPA Interface Processor (Cisco ASR1000-SIP10 or Cisco ASR1000-SIP40)
- One Cisco ASR 1000 Series Embedded Services Processor (Cisco ASR 1000-ESP10, Cisco ASR 1000-ESP20, or Cisco ASR1000-ESP40)
- One Cisco ASR 1000 Series Route Processor (Cisco ASR1000-RP1 or Cisco ASR1000-RP2)
- Dual (redundant) AC and DC power supplies

This section contains the following topics:

Front View

The following image shows the Cisco ASR 1004 Router with modules and filler plates installed.

Figure 54: Cisco ASR 1004 Router—Front and Side View

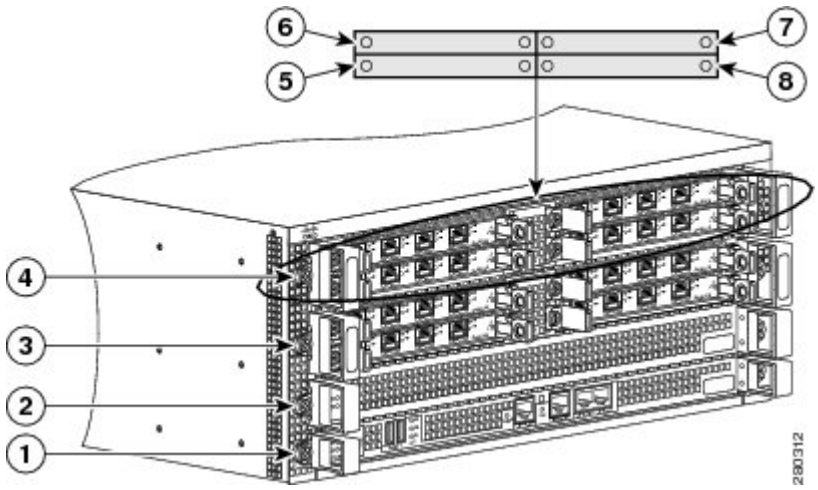

1	Slot R0 with ASR 1000 Series Route Processor	5	SPA subslot 2
2	Slot F0 with Cisco ASR1000-ESP10, Cisco ASR1000-ESP20, or Cisco ASR1000-ESP40	6	SPA subslot 0
3	ASR 1000 Series SIP slot 0	7	SPA subslot 1
4	ASR 1000 Series SIP slot 1	8	SPA subslot 3

Rear View

The following image shows the rear of the Cisco ASR 1004 Router with two AC power supplies installed.

Figure 55: Cisco ASR 1004 Router Rear View with AC Power Supplies

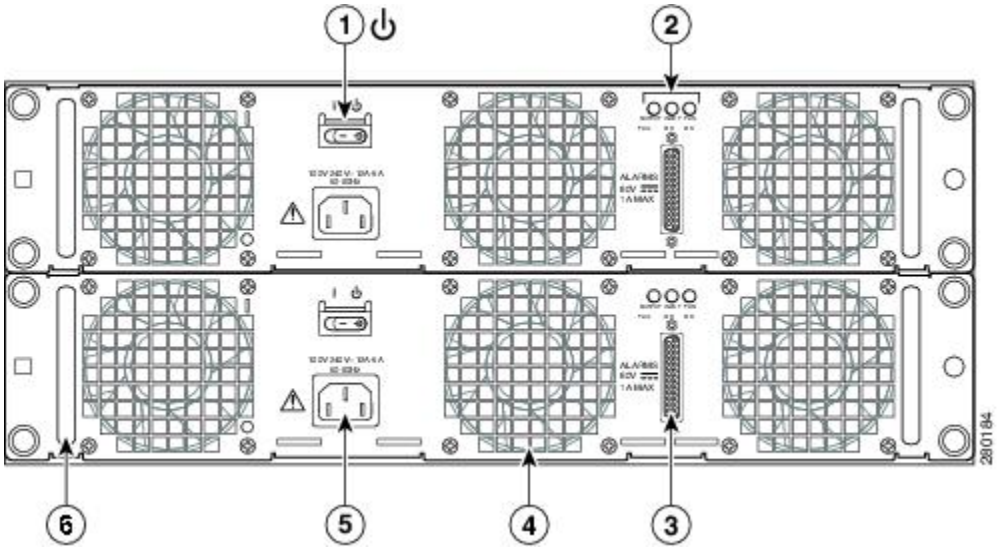

1	AC power supply Standby switch	4	AC power supply fan
2	AC power supply LEDs	5	AC power inlet
3	AC power supply DB-25 alarm connector	6	AC power supply handle

The following image shows the rear of the Cisco ASR 1004 Router with two –48 VDC power supplies installed.

Figure 56: Cisco ASR 1004 Router Rear View With –48 VDC Power Supplies

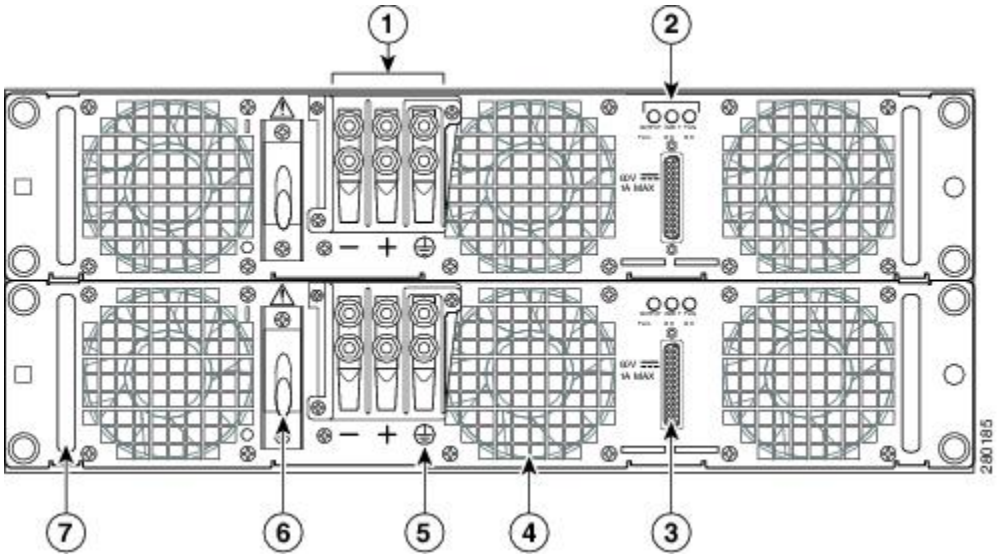

1	–48 VDC power supply terminal block	5	Grounding symbol

2	–48 VDC power supply LEDs	6	–48 VDC power supply On/Off switch
3	–48 VDC power supply DB-25 alarm connector	7	–48 VDC power supply handle
4	–48 VDC power supply fan	—	—

Internal fans draw cooling air into the chassis and across internal components to maintain an acceptable operating temperature. (See Figure 55: Cisco ASR 1004 Router Rear View with AC Power Supplies, on page 157.) The fans are located at the rear of the chassis. A two-hole grounding lug is located on the side of the chassis. Two power supplies, either two AC power supplies or two –48 VDC power supplies, are accessed from the rear of the router.

Note You have already unpacked your chassis and read all the site requirements for your new equipment. Proceed with the installation.

Note Do not combine AC and –48 VDC power supplies in the same chassis.

Warning This warning symbol means danger. You are in a situation that could cause bodily injury. Before you work on any equipment, be aware of the hazards involved with electrical circuitry and be familiar with standard practices for preventing accidents. Use the statement number provided at the end of each warning to locate its translation in the translated safety warnings that accompanied this device. Statement 1071

Warning Before you install, operate, or service the system, read the *Regulatory Compliance and Safety Information for Cisco ASR 1000 Series Aggregation Services Routers* publication. This document provides important safety information you should know before working with the system. Statement 200

Note You have already unpacked your chassis and read all the site requirements for your new equipment. Proceed with the installation.

Cisco ASR 1004 Router Slot Numbering

The Cisco ASR 1004 Router contains two Cisco ASR 1000 Series SPA Interface Processors (SIPs) and supports four subslots for the installation of SPAs.

The following image shows the Cisco ASR 1004 Router with modules and filler plates installed.

Figure 57: Cisco ASR 1004 Router—Front and Side View

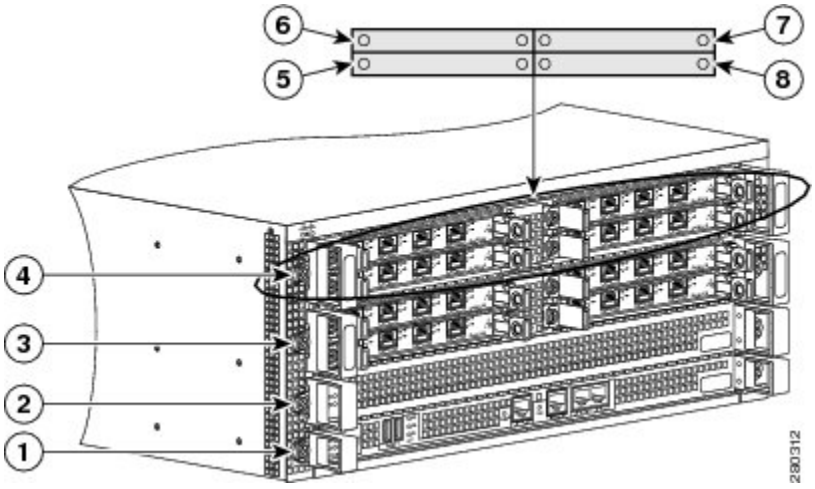

1	Slot R0 with ASR 1000 Series RP1	5	SPA subslot 2
2	Slot F0 with Cisco ASR1000-ESP10, Cisco ASR1000-ESP20, or Cisco ASR1000-ESP40	6	SPA subslot 0
3	ASR 1000 Series SIP slot 0	7	SPA subslot 1
4	ASR 1000 Series SIP slot 1	8	SPA subslot 3

Installation Methods

Although rack-mounting is the preferred method of installation for the Cisco ASR 1004 Router, you can mount the chassis:

- On an equipment shelf or tabletop
- In a19-inch wide (standard), 4-post equipment rack or two-post, using the rack-mount brackets in the accessory kit

Note The Cisco ASR 1004 Router usually ships fully loaded. However, you can remove components from the chassis to make the chassis lighter for your rack installation.

General Rack Installation Guidelines

When planning your rack installation, consider the following guidelines:

- The Cisco ASR 1004 Router requires a minimum of 4 rack units (7 inches or 17.8 cm) of vertical rack space. Measure the proposed rack location before mounting the chassis in the rack.
- Before using a particular rack, check for obstructions (such as a power strip) that could impair rack-mount installation. If a power strip does impair a rack-mount installation, remove the power strip before installing the chassis, and then replace it after the chassis is installed.
- Allow sufficient clearance around the rack for maintenance. If the rack is mobile, you can push it back near a wall or cabinet for normal operation and pull it out for maintenance (installing or moving cards, connecting cables, or replacing or upgrading components). Otherwise, allow 19 inches (48.3 cm) of clearance to remove field-replaceable units.
- Maintain a minimum clearance of 3 inches (7.62 cm) on the front, top, and sides of the chassis for the cooling air inlet and exhaust ports, respectively. Avoid placing the chassis in an overly congested rack or directly next to another equipment rack; otherwise, the heated exhaust air from other equipment can enter the inlet air vents and cause an overtemperature condition inside the router.



Caution To prevent chassis overheating, never install a Cisco ASR 1004 Router in an enclosed room that is not properly ventilated or air conditioned.

- Always install heavier equipment in the lower half of a rack to maintain a low center of gravity to prevent the rack from falling over.
- Install and use the cable-management brackets included with the Cisco ASR 1004 Router to keep cables organized and out of the way of the cards and processors. Ensure that cables from other equipment already installed in the rack do not impair access to the cards or require you to disconnect cables unnecessarily to perform equipment maintenance or upgrades.
- Install rack stabilizers (if available) before you mount the chassis.
- Provide an adequate chassis ground (earth) connection for your router chassis.

In addition to the preceding guidelines, review the precautions for avoiding excessive temperature conditions in the "Site Environmental Requirements" section on page 5-9 .

The following table provides the Cisco ASR 1004 Router dimensions and weight information.

Table 51: Cisco ASR 1004 Router Dimensions and Weight

Cisco ASR 1004	Dimensions
Depth	22.50 in. (57.15 cm)(including card handles, cable-management brackets, power supply handles).
Height	6.95 in. (17.653cm) (4 rack-mount per EIA RS-310)
Width	17.25 in. (43.815 cm) (19 inch rack- mount or optional 23 Telco rack-mount)
Weight	50 pounds (fully configured) 22.6796 kg

Guidelines for an Equipment Shelf or Tabletop Installation

The chassis should already be in the area where you will install it. If you have not determined where to install your chassis, see the "Cisco ASR 1000 Series Routers Component Overview" section on page 2-1 for information about site considerations.

If you are not rack-mounting your Cisco ASR 1000 series chassis, place it on a sturdy equipment shelf or tabletop.

When installing the Cisco ASR 1004 Router on an equipment shelf or tabletop, ensure that the surface is clean and that you have considered the following:

- The Cisco ASR 1004 Router requires at least 3 inches (7.62 cm) of clearance at the inlet and exhaust vents (the front and top/rear sides of the chassis).
- The Cisco ASR 1004 Router should be installed off the floor. Dust that accumulates on the floor is drawn into the interior of the router by the cooling fans. Excessive dust inside the router can cause overtemperature conditions and component failures.
- There must be approximately 19 inches (48.3 cm) of clearance at the front and rear of the chassis to install and replace FRUs, or to access network cables and equipment.
- The Cisco ASR 1004 Router needs adequate ventilation. Do not install it in an enclosed cabinet where ventilation is inadequate.
- Have the cable-management bracket available if you plan to install it on the front of the chassis.
- An adequate chassis ground (earth) connection exists for your router chassis (see the Attaching a Chassis Ground Connection, on page 172).
- Always follow proper lifting practices as outlined in the "Electrical Safety" section on page 5-21 , when handling the chassis.

Equipment Shelf or Tabletop Installation



Note At least two people are required to lift the chassis onto a tabletop or platform. To prevent injury, keep your back straight and lift with your legs, not your back. Statement 164

Figure 58: Lifting the Chassis

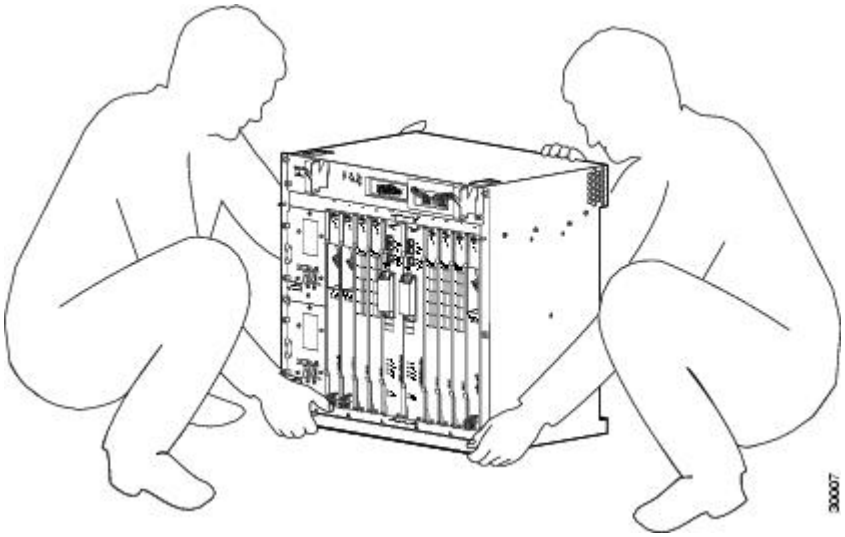

Note The chassis in the image does not represent the Cisco ASR 1004 Router. This is only an example of how to lift a Cisco chassis.

SUMMARY STEPS

1. Attach the front rack-mount brackets. Locate the threaded holes in the front sides of the chassis (first holes beyond the vent holes) and use the package of black screws that shipped with the chassis.
2. Align the front rack-mount bracket to one side of the chassis.
3. Insert and tighten the screws on one side.
4. Repeat Step 2 through Step 3 on the other side of the chassis. Use all the screws to secure the rack-mount brackets to the chassis.
5. Gather the two cable-management brackets and screws shipped with your chassis. The followng image shows attached cable-management brackets on the front of the Cisco ASR 1004 Router.
6. Screw the cable-management bracket to each side of the rack-mount brackets already attached to the chassis. Use two screws for each cable-management bracket. Use the package of four screws.
7. Check that all screws are securely tightened.

DETAILED STEPS

Step 1 Attach the front rack-mount brackets. Locate the threaded holes in the front sides of the chassis (first holes beyond the vent holes) and use the package of black screws that shipped with the chassis.

Step 2 Align the front rack-mount bracket to one side of the chassis.

Step 3 Insert and tighten the screws on one side.

Step 4 Repeat Step 2 through Step 3 on the other side of the chassis. Use all the screws to secure the rack-mount brackets to the chassis.

Note The cable-management brackets are installed on the chassis after you install the chassis rack-mount brackets and mount the chassis in the rack.

Step 5 Gather the two cable-management brackets and screws shipped with your chassis. The followng image shows attached cable-management brackets on the front of the Cisco ASR 1004 Router.

Note Make certain that the cable-management 'U' feature device has the open end pointing upwards when you attach it to the chassis after the chassis is installed in a rack.

Figure 59: Attaching the Cable-Management Brackets to the Cisco ASR 1004 Router

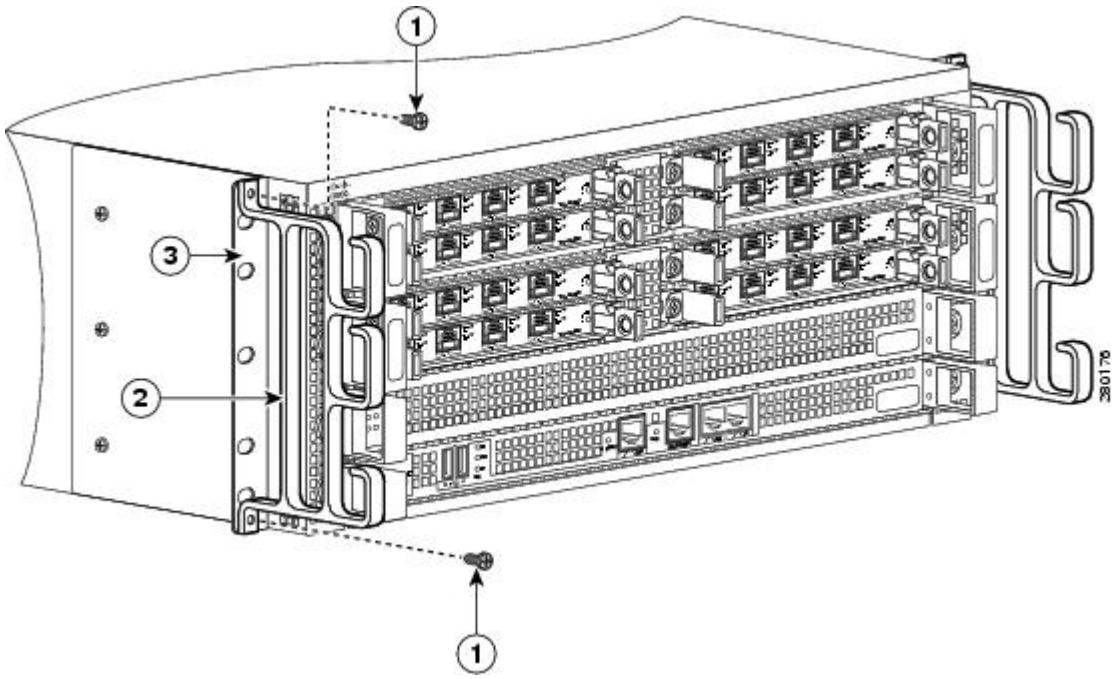

1	Cable-management bracket screws	3	Chassis front rack-mount bracket ear
2	Cable-management bracket	—	—

Step 6 Screw the cable-management bracket to each side of the rack-mount brackets already attached to the chassis. Use two screws for each cable-management bracket. Use the package of four screws.

Step 7 Check that all screws are securely tightened.

What to do next

You have completed a tabletop or equipment shelf chassis installation. Go to the Attaching a Chassis Ground Connection, on page 172 to continue the installation.

Rack-Mounting the Cisco ASR 1004 Router

The Cisco ASR 1004 Router can be installed with both front or rear rack-mount brackets.

Note The chassis rack-mounting flanges are secured directly to the chassis before you lift it into the rack.

Verifying Rack Dimensions

Before you install the chassis, measure the space between the vertical mounting flanges (rails) on your equipment rack to verify that the rack conforms to the measurements shown in the following image.

SUMMARY STEPS

1. Mark and measure the distance between two holes on the left and right mounting rails.
2. Measure the space between the inner edges of the left front and right front mounting flanges on the equipment rack.

DETAILED STEPS

Step 1 Mark and measure the distance between two holes on the left and right mounting rails.

The distance should measure 18.31 inches ± 0.06 inches (46.5 cm ± 0.15 cm).

Note Measure for pairs of holes near the bottom, middle and top of the equipment rack to ensure that the rack posts are parallel.

Step 2 Measure the space between the inner edges of the left front and right front mounting flanges on the equipment rack.

The space must be at least 17.7 inches (45 cm) to accommodate the chassis which is 17.25 inches (43.8 cm) wide and fits between the mounting posts on the rack.

Figure 60: Verifying Equipment Rack Dimensions

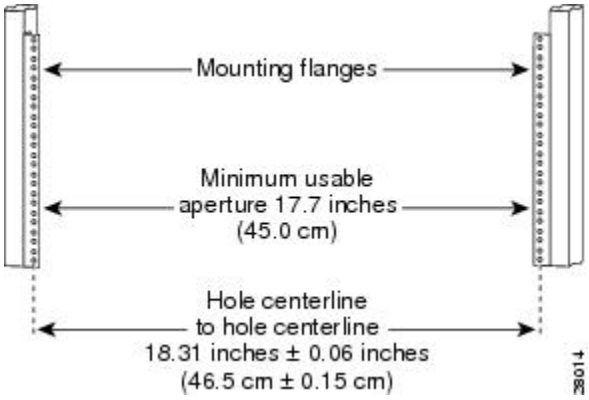

Attaching the Chassis Rack-Mount Brackets

This section explains how to attach the front and rear rack-mount brackets to the chassis. Before installing the chassis in the rack, you must install the rack-mount brackets on each side of the chassis.

The parts and tools required for installing the rack-mount brackets and cable-management brackets are listed in the "Tools and Equipment" section on page 5-23 .

Note The cable-management brackets are installed on the chassis after you install the chassis rack-mount brackets and mount the chassis in the rack.

Chassis Front Rack-Mount Brackets

Determine where in the rack you want the chassis to be mounted. If you are mounting more than one chassis in the rack, then start from the bottom up or the center of the rack. Figure 61: Attaching the Front Rack-Mount Brackets to the Cisco ASR 1004 Router, on page 166 image shows the brackets attached to the chassis. Depending on the bracket holes you use, the chassis may protrude in the rack.

To install the front rack-mount brackets on the Cisco ASR 1004 Router, perform the following steps:

SUMMARY STEPS

1. Locate the threaded holes on the side of the chassis. Make certain that you hold the front rack-mount bracket with the ear and holes facing outward and towards the front of the chassis (see Figure 61: Attaching the Front Rack-Mount Brackets to the Cisco ASR 1004 Router, on page 166).
2. Position the front rack-mount bracket top hole with the chassis first top hole behind the side vent holes.
3. Insert and tighten the black screws on one side.
4. Repeat Step 1 through Step 3 on the other side of the chassis. Use black screws to secure the rack-mount brackets to the chassis.
5. Install the chassis in a rack. To install the Cisco ASR 1004 Router in a rack, go to the Installing the Cisco ASR 1004 Router in a Rack, on page 168.

DETAILED STEPS

Step 1 Locate the threaded holes on the side of the chassis. Make certain that you hold the front rack-mount bracket with the ear and holes facing outward and towards the front of the chassis (see Figure 61: Attaching the Front Rack-Mount Brackets to the Cisco ASR 1004 Router, on page 166).

The following shows where to attach the front rack-mount brackets to the Cisco ASR 1004 Router.

Figure 61: Attaching the Front Rack-Mount Brackets to the Cisco ASR 1004 Router

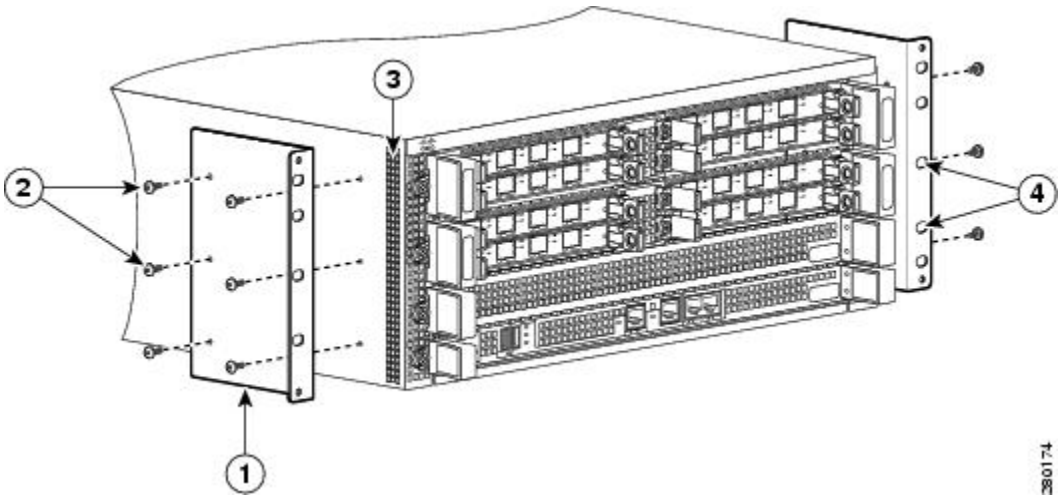

1	Front rack-mount bracket	3	Chassis side vent holes
2	Front rack-mount bracket screws	4	Front rack-mount bracket and ear holes

Step 2 Position the front rack-mount bracket top hole with the chassis first top hole behind the side vent holes.

Step 3 Insert and tighten the black screws on one side.

Step 4 Repeat Step 1 through Step 3 on the other side of the chassis. Use black screws to secure the rack-mount brackets to the chassis.

Step 5 Install the chassis in a rack. To install the Cisco ASR 1004 Router in a rack, go to the Installing the Cisco ASR 1004 Router in a Rack, on page 168.

What to do next

This completes the steps for attaching the front rack-mount brackets to the Cisco ASR 1004 Router.

Chassis Rear Rack-Mount Brackets

If you are rack-mounting the chassis using the rear rack-mount brackets, then this type of installation provides for the chassis being recessed in the rack.

To install the front rack-mount brackets on the Cisco ASR 1004 Router, perform the following steps:

SUMMARY STEPS

1. Locate the threaded holes on the rear side of the chassis. Make certain that you hold the rear rack-mount bracket with the ear and holes facing outward and towards the rear of the chassis.
2. Position the rear rack-mount bracket top hole with the chassis second top hole from the back (see Figure 62: Attaching the Rear Rack-Mount Brackets to the Cisco ASR 1004 Router, on page 167).
3. Insert and tighten the five screws on one side.
4. After the bracket is secured to the side of the chassis, slide the two remaining components into the side rack-mount bracket.

5. Repeat Step 1 through Step 3 on the other side of the chassis. Use five screws to secure the rear rack-mount brackets to the chassis.

DETAILED STEPS

Step 1 Locate the threaded holes on the rear side of the chassis. Make certain that you hold the rear rack-mount bracket with the ear and holes facing outward and towards the rear of the chassis.

The following image shows where to attach the rear rack-mount brackets to the Cisco ASR 1004 Router.

Figure 62: Attaching the Rear Rack-Mount Brackets to the Cisco ASR 1004 Router

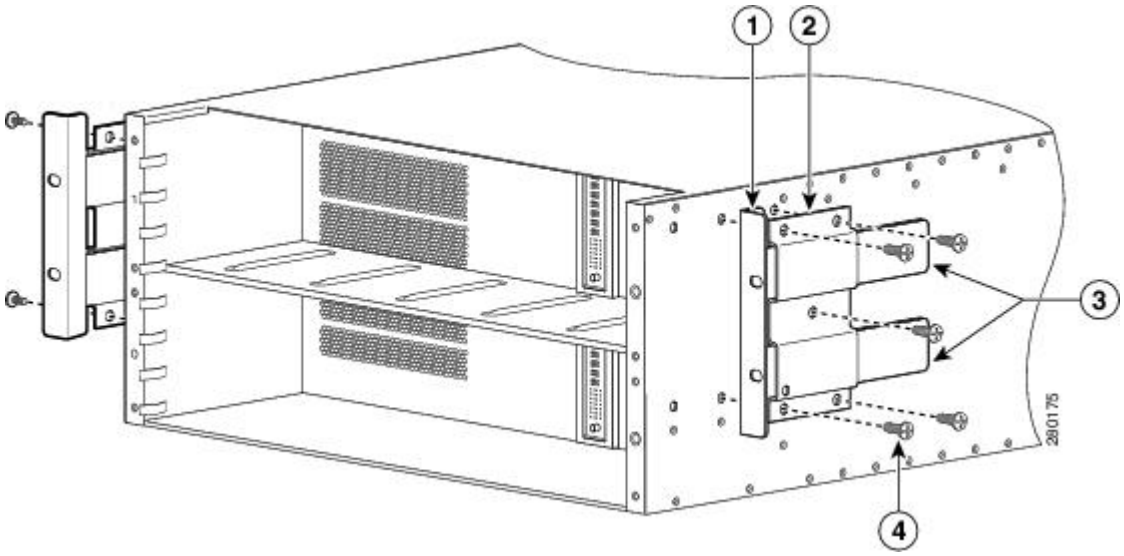

1	Rear rack-mount bracket ear and holes	3	Rear rack-mount bracket components that slide into rear bracket that is attached to the chassis
2	Rear rack-mount bracket (first bracket to attach to chassis)	4	Rear rack-mount bracket screws

Step 2 Position the rear rack-mount bracket top hole with the chassis second top hole from the back (see Figure 62: Attaching the Rear Rack-Mount Brackets to the Cisco ASR 1004 Router, on page 167).

Step 3 Insert and tighten the five screws on one side.

Step 4 After the bracket is secured to the side of the chassis, slide the two remaining components into the side rack-mount bracket.

Step 5 Repeat Step 1 through Step 3 on the other side of the chassis. Use five screws to secure the rear rack-mount brackets to the chassis.

What to do next

This completes the steps for attaching the rear rack-mount brackets to the Cisco ASR 1004 Router.

Caution Before you mount the Cisco ASR 1004 Router in a rack, make certain you read which rack-mount bracket ear holes to use when positioning the chassis in the rack. As a result of using the designated ear holes on the rack-mount bracket, the cable-management bracket installation will be made easier. For cable-management installation instructions, go to the Attaching a Chassis Ground Connection, on page 172.

Installing the Cisco ASR 1004 Router in a Rack

After installing the rack-mount brackets on the chassis, you mount the chassis by securing the rack-mount brackets to two posts or mounting strips in the rack using the screws provided. Because the rack-mount brackets support the weight of the entire chassis, be sure to use all screws to fasten the two rack-mount brackets to the rack posts.

Warning To prevent bodily injury when mounting or servicing this unit in a rack, you must take special precautions to ensure that the system remains stable. The following guidelines are provided to ensure your safety:-This unit should be mounted at the bottom of the rack if it is the only unit in the rack.-When mounting this unit in a partially filled rack, load the rack from the bottom to the top with the heaviest component at the bottom of the rack.-If the rack is provided with stabilizing devices, install the stabilizers before mounting or servicing the unit in the rack. Statement 1006

We recommend that you allow at least 1 or 2 inches (2.54 or 5.08 cm) of vertical clearance between the router and any equipment directly above and below it.

To install the chassis in the rack, perform the following steps:

SUMMARY STEPS

1. On the chassis, ensure that all screw fasteners on the installed components are securely tightened.
2. Make sure that your path to the rack is unobstructed. If the rack is on wheels, ensure that the brakes are engaged or that the rack is otherwise stabilized. See the next sections on the types of racks you can use to install the chassis.
3. (Optional) Install a shelf in the rack to support the Cisco ASR 1004 Router. If you use a shelf, this will help support the chassis while you secure it to the rack.
4. With two people, lift the chassis into position between the rack posts.
5. Align the mounting bracket holes with the rack post holes and attach the chassis to the rack.
6. Position the chassis until the rack-mounting flanges are flush against the mounting rails on the rack.
7. Hold the chassis in position against the mounting rails and follow these steps:
8. Tighten all screws on each side to secure the chassis to the equipment rack.

DETAILED STEPS

Step 1 On the chassis, ensure that all screw fasteners on the installed components are securely tightened.

Step 2 Make sure that your path to the rack is unobstructed. If the rack is on wheels, ensure that the brakes are engaged or that the rack is otherwise stabilized. See the next sections on the types of racks you can use to install the chassis.

Step 3 (Optional) Install a shelf in the rack to support the Cisco ASR 1004 Router. If you use a shelf, this will help support the chassis while you secure it to the rack.

Step 4 With two people, lift the chassis into position between the rack posts.

Step 5 Align the mounting bracket holes with the rack post holes and attach the chassis to the rack.

Note If you are using a shelf then raise the chassis to the level of the shelf. Let the bottom of the chassis rest on the brackets, but continue to support the chassis.

Step 6 Position the chassis until the rack-mounting flanges are flush against the mounting rails on the rack.

Step 7 Hold the chassis in position against the mounting rails and follow these steps:

a) The Cisco ASR 1004 rack-mount ears contain 8 ear holes. Insert the bottom screw into the third hole up from the bottom of the rack-mount ear and use a hand-held screwdriver to tighten the screw to the rack rail.

Note In the next step, insert the top screw diagonally from the bottom screw that you just attached.This helps with keeping the chassis in place.

b) Insert the top screw into the third hole down from the top of the rack-mount ear and tighten the screw to the rack rail.

c) Insert a screw in the middle of the rack-mount bracket on both sides of the chassis.

d) Repeat these steps for the other side of the chassis.

Note As a result of using the specified rack-mount bracket ear holes, the cable-management bracket can be easily attached to the rack-mount bracket when the chassis is in the rack.

Step 8 Tighten all screws on each side to secure the chassis to the equipment rack.

What to do next

You can install your Cisco ASR 1004 chassis on a two-post rack or a four-post rack. For instructions, see the Two-Post Rack Installation, on page 169 or the Four-Post Rack Installation, on page 171.

Two-Post Rack Installation

The Cisco ASR 1004 Router can be installed on a two-post rack, either 19 inch or 23 inch.

Note Inner clearance (the width between the inner sides of the two posts or rails) must be at least 19 inches (48.26cm). The height of the chassis is 6.95 inches (17.653 cm). Airflow through the chassis is from front to back.

Caution If you are using a two-post rack secure the rack to the floor surface to prevent tipping and avoid bodily injury and component damage.

SUMMARY STEPS

1. Position the chassis so the front is closest to you and lift it carefully into the rack. To prevent injury, avoid any sudden twists or moves.
2. Slide the chassis into the rack, pushing it back until the brackets meet the mounting strips or posts on both sides of the rack.

3. Keeping the brackets flush against the posts or mounting strips, align the holes in the brackets with the holes on the rack or mounting strip.
4. For each bracket, insert and tighten two screws to the rack on both sides.

DETAILED STEPS

Step 1 Position the chassis so the front is closest to you and lift it carefully into the rack. To prevent injury, avoid any sudden twists or moves.

The following image shows where to attach the chassis rack-mount brackets to the equipment rack.

Figure 63: Attaching the Rear Rack-Mount Brackets to the Cisco ASR 1004 Router

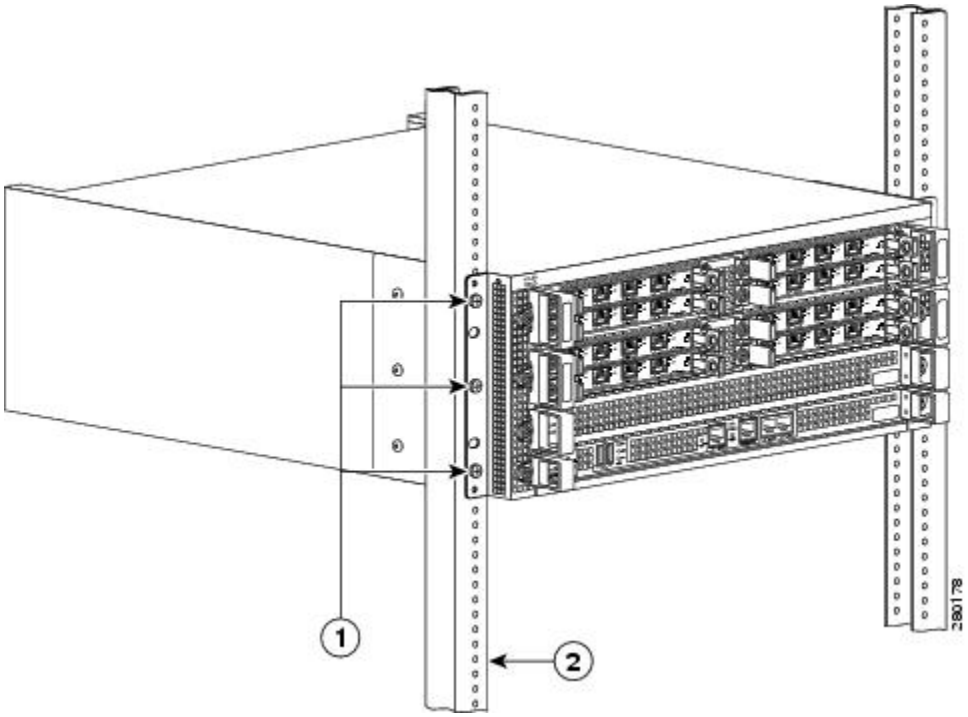

1	Rack-mount bracket ear and holes	2	Rack equipment rail

Step 2 Slide the chassis into the rack, pushing it back until the brackets meet the mounting strips or posts on both sides of the rack.

Step 3 Keeping the brackets flush against the posts or mounting strips, align the holes in the brackets with the holes on the rack or mounting strip.

Step 4 For each bracket, insert and tighten two screws to the rack on both sides.

What to do next

This completes the procedure for installing the chassis on a two-post rack. Proceed to the Attaching a Chassis Ground Connection, on page 172 to continue the installation.

Four-Post Rack Installation

The Cisco ASR 1004 Router can be flush-mounted in a 19-inch equipment rack using the rack-mounting kit provided with your system. The Cisco ASR 1004 Router can be mounted into the rack using two recommended methods:

- Installing the chassis in an existing rack with equipment.
- Installing an empty chassis in a rack with no equipment installed.

When handling the chassis, always follow proper lifting practices. See the "Chassis-Lifting Guidelines" section.

Note Inner clearance (the width between the inner sides of the two posts or rails) must be at least 19 inches (48.26cm). The height of the chassis is 6.95 inches (17.653 cm). Airflow through the chassis is from front to back.

Note Make sure the rack is stabilized.

SUMMARY STEPS

1. (Optional) Install a shelf in the rack to support the Cisco ASR 1004 Router. If you are using a shelf then raise the chassis to the level of the shelf. Let the bottom of the chassis rest on the brackets, but continue to support the chassis.Using two people, lift the chassis into the rack using the side handles and grasping underneath the power supply bays.
2. Position the chassis until the rack-mounting flanges are flush against the mounting rails on the rack.
3. Hold the chassis in position against the mounting rails while the second person finger-tightens a screw to the rack rails on each side of the chassis. The following image shows the rear rack-mount brackets and the front rack-mount brackets on the Cisco ASR 1004 Router.
4. Finger-tighten 4 more screws to the rack rails on each side of the chassis.
5. Tighten all screws on each side to secure the chassis to the equipment rack.
6. Use a level to verify that the tops of the two brackets are level, or use a measuring tape to verify that both brackets are the same distance from the top of the rack rails.

DETAILED STEPS

Step 1 (Optional) Install a shelf in the rack to support the Cisco ASR 1004 Router. If you are using a shelf then raise the chassis to the level of the shelf. Let the bottom of the chassis rest on the brackets, but continue to support the chassis.Using two people, lift the chassis into the rack using the side handles and grasping underneath the power supply bays.

Step 2 Position the chassis until the rack-mounting flanges are flush against the mounting rails on the rack.

Note Use the third hole up from the bottom of the rack-mount bracket and the third hole down from the top of the rack-mount bracket.

Step 3 Hold the chassis in position against the mounting rails while the second person finger-tightens a screw to the rack rails on each side of the chassis. The following image shows the rear rack-mount brackets and the front rack-mount brackets on the Cisco ASR 1004 Router.

Figure 64: Cisco ASR 1004 Router on a Four-Post Rack—Front and Rear Rack-Mounting

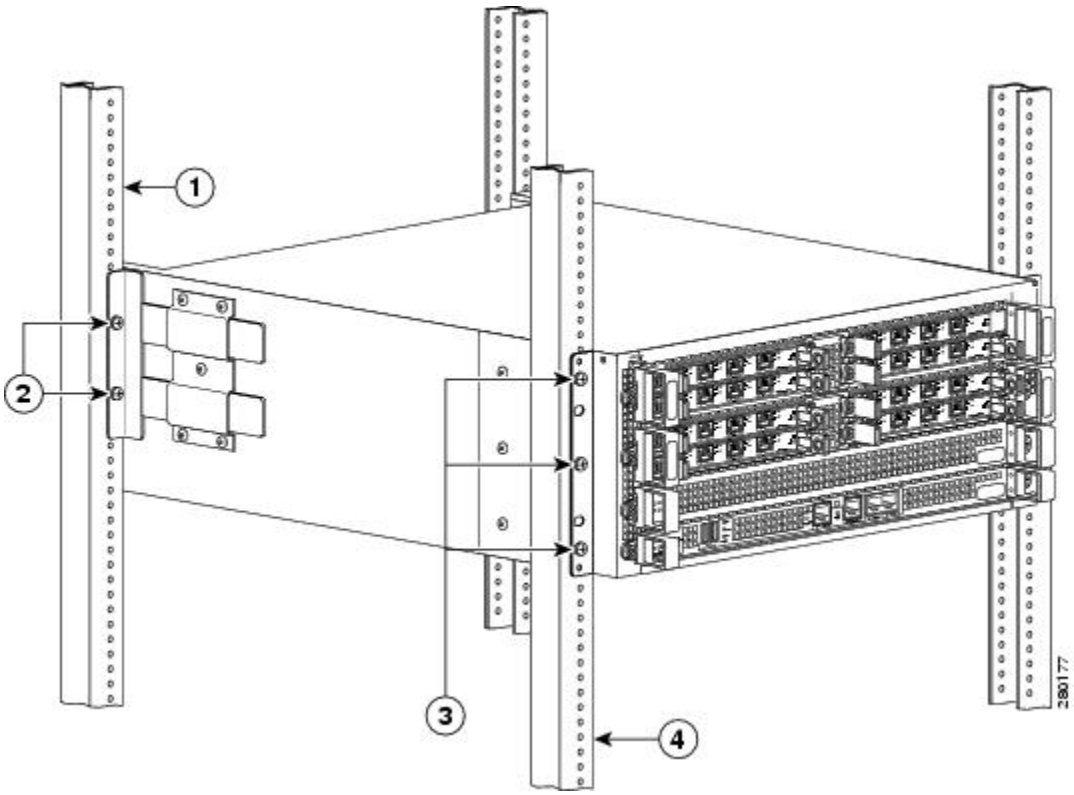

1	Equipment rack rear rail	3	Front rack-mount bracket ear and holes
2	Chassis rear rack-mount bracket and ear holes	4	Equipment rack front rail

Step 4 Finger-tighten 4 more screws to the rack rails on each side of the chassis.

Step 5 Tighten all screws on each side to secure the chassis to the equipment rack.

Step 6 Use a level to verify that the tops of the two brackets are level, or use a measuring tape to verify that both brackets are the same distance from the top of the rack rails.

What to do next

This completes the procedure for installing the chassis in the rack. Proceed to the Attaching a Chassis Ground Connection, on page 172 to continue the installation.

Attaching a Chassis Ground Connection

Connecting the Cisco ASR 1004 Router chassis to ground is required for all DC powered installations and any AC powered installation where compliance with Telcordia grounding requirements is necessary.

Caution The dual-lug chassis ground stud must be installed, the SIP and SPA must be fully inserted and screwed in and earthed to prevent a potential hazard in a telecom line.

Have the recommended tools and supplies available before you begin this procedure.

Warning This equipment must be grounded. Never defeat the ground conductor or operate the equipment in the absence of a suitably installed ground conductor. Contact the appropriate electrical inspection authority or an electrician if you are uncertain that suitable grounding is available. Statement 1024

Before you connect power or turn on power to your chassis, you must provide an adequate chassis ground (earth) connection for the chassis. A chassis ground connector is provided on each Cisco ASR 1004 Router. (See the image on the following section "Recommended Tools and Supplies.") There is a grounding stud on the side of the chassis and on the –48 VDC power supply (primary grounding stud).

Caution The grounding wire is always the first to be installed or connected and the last to be removed or disconnected.

Recommended Tools and Supplies

The following tools, equipment, and supplies necessary to connect the system ground to the chassis:

- Phillips screwdriver
- Dual-lug chassis ground component
- Grounding wire

The following image shows the location of the dual ground lug on the rear of the of Cisco ASR 1004 Router.

Figure 65: Chassis Ground Lug Location on the Cisco ASR 1004 Router

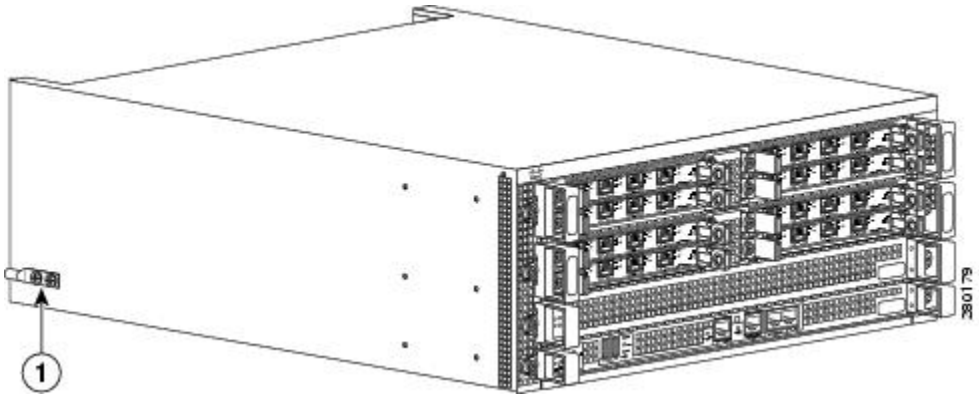

1	Chassis ground connector on the Cisco ASR 1004 Router

Use the following procedure to attach the grounding lug to the chassis ground connector on your chassis:

SUMMARY STEPS

1. Use the wire stripper to strip one end of the AWG #6 wire approximately 0.75 inches (19.05 mm).
2. Insert the AWG #6 wire into the wire receptacle on the grounding lug.
3. Use the crimping tool to carefully crimp the wire receptacle around the wire; this step is required to ensure a proper mechanical connection.
4. Attach the grounding lug with the wire on the left to avoid having the grounding wire overlapping the power supply. The following image shows how to attach the grounding screws.
5. Locate the chassis ground connector on the side of your chassis.
6. Insert the two screws through the holes in the grounding lug as shown in Figure 66: Attaching a Grounding Lug to the Chassis Ground Connector, on page 174.
7. Use the Number 2 Phillips screwdriver to carefully tighten the screws until the grounding lug is held firmly to the chassis. Do not overtighten the screws.
8. Connect the opposite end of the grounding wire to the appropriate grounding point at your site to ensure an adequate chassis ground.

DETAILED STEPS

Step 1 Use the wire stripper to strip one end of the AWG #6 wire approximately 0.75 inches (19.05 mm).

Step 2 Insert the AWG #6 wire into the wire receptacle on the grounding lug.

Step 3 Use the crimping tool to carefully crimp the wire receptacle around the wire; this step is required to ensure a proper mechanical connection.

Step 4 Attach the grounding lug with the wire on the left to avoid having the grounding wire overlapping the power supply. The following image shows how to attach the grounding screws.

Figure 66: Attaching a Grounding Lug to the Chassis Ground Connector

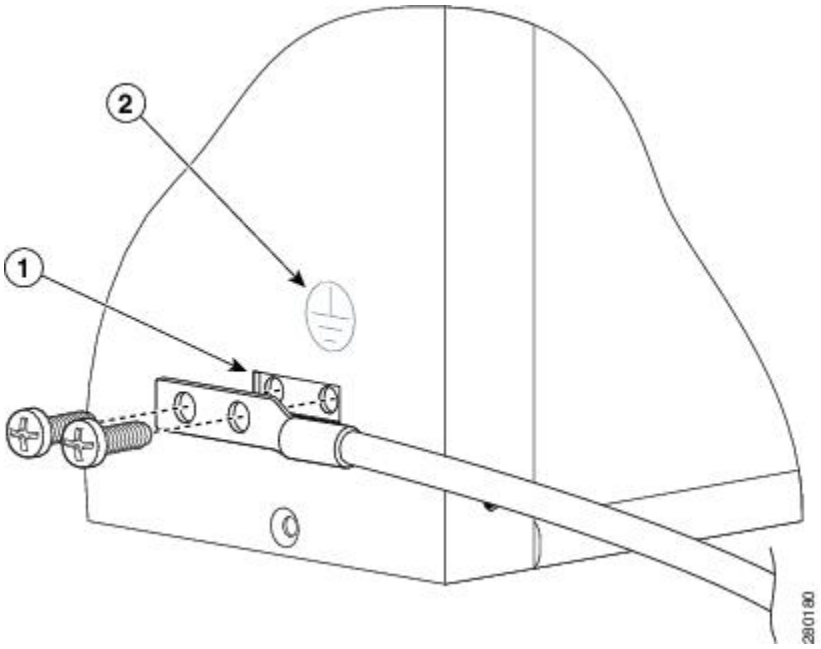

1	Chassis ground connector	2	Ground symbol

Step 5 Locate the chassis ground connector on the side of your chassis.

Step 6 Insert the two screws through the holes in the grounding lug as shown in Figure 66: Attaching a Grounding Lug to the Chassis Ground Connector, on page 174.

Step 7 Use the Number 2 Phillips screwdriver to carefully tighten the screws until the grounding lug is held firmly to the chassis. Do not overtighten the screws.

Step 8 Connect the opposite end of the grounding wire to the appropriate grounding point at your site to ensure an adequate chassis ground.

What to do next

This completes the procedure for attaching a chassis ground connection. To continue, go to the Attaching the Cable-Management Bracket, on page 175.

Attaching the Cable-Management Bracket

The cable-management brackets mount to each rack-mount bracket on the chassis to provide cable-management to both sides of the chassis (parallel with card orientation). These brackets are screw mounted to the rack-mount brackets to allow easy installation and removal of cables.

The cable-management brackets for the Cisco ASR 1004 Router contain three independent cable-management "U" type features with four screws and provides cable dressing of each card module slots. For Cisco ASR 1000 SIPs, these brackets work in tandem with shared port adapter product feature cable-management device to allow installation and removal of adjacent cards without the need to remove cables.

Note Make certain that the cable-management bracket "U" type feature is facing upwards when you attach it to the chassis.

Follow these steps to attach the cable-management brackets to both sides of the Cisco ASR 1004 Router in the equipment rack:

SUMMARY STEPS

1. Align the cable-management bracket to the rack-mount bracket on one side of the Cisco ASR 1004 Router. The cable-management bracket aligns to the top hole of the chassis rack-mount bracket.
2. Using a Phillips screwdriver, insert the screw through cable-management bracket and into the chassis rack-mount and tighten the screw.
3. Using the bottom rack-mount ear hole, insert the screw through cable-management bracket and into the chassis rack-mount (see Figure 67: Chassis Rack-Mount Bracket Ear Holes for the Cable-Management Bracket, on page 176).

DETAILED STEPS

Step 1 Align the cable-management bracket to the rack-mount bracket on one side of the Cisco ASR 1004 Router. The cable-management bracket aligns to the top hole of the chassis rack-mount bracket.

Step 2 Using a Phillips screwdriver, insert the screw through cable-management bracket and into the chassis rack-mount and tighten the screw.

The following image shows where to attach the cable-management brackets to the Cisco ASR 1004 Router in a rack.

Figure 67: Chassis Rack-Mount Bracket Ear Holes for the Cable-Management Bracket

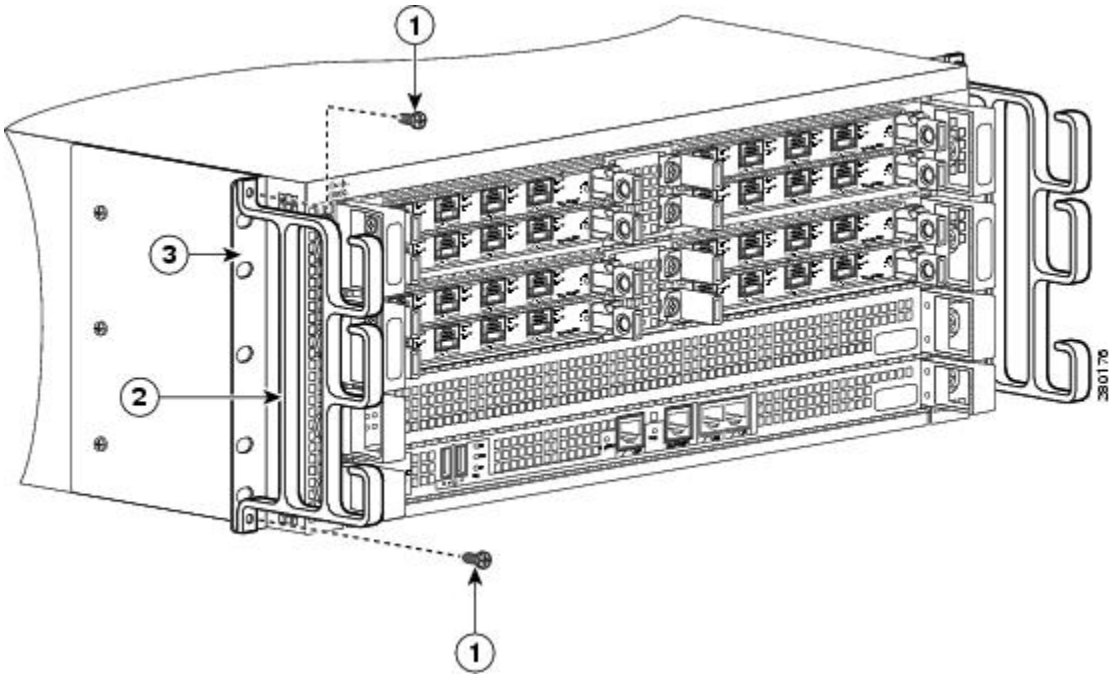

1	Cable-management bracket top and bottom screw	3	Chassis rack-mount bracket
2	Cable-management bracket and U feature device	—	—

Step 3 Using the bottom rack-mount ear hole, insert the screw through cable-management bracket and into the chassis rack-mount (see Figure 67: Chassis Rack-Mount Bracket Ear Holes for the Cable-Management Bracket, on page 176).

What to do next

This completes the procedure for installing the cable-management brackets on the chassis in a rack.

Connecting the Shared Port Adapter Cables

The instructions for connecting the cables for the shared port adapter installed in the Cisco ASR 1004 Router are contained in the respective configuration documents for each port adapter. For example, if you are

connecting the optical fiber cables for the PA-POS-OC3 port adapter, see PA-POS-OC3 Port Adapter Installation and Configuration at the following location:

http://www.cisco.com/en/US/partner/docs/interfaces_modules/port_adapters/install_upgrade/pos/pa-pos-oc3_install_config/paposoc3.html

Connecting the Console and Auxiliary Port Cables

The Cisco ASR 1004 Router has a DCE-mode console port for connecting a console terminal and an auxiliary port for additional connections to your chassis. The auxiliary port can also be used for diagnostics. The following shows the CON and AUX ports on the Cisco ASR 1000 Series route processor.

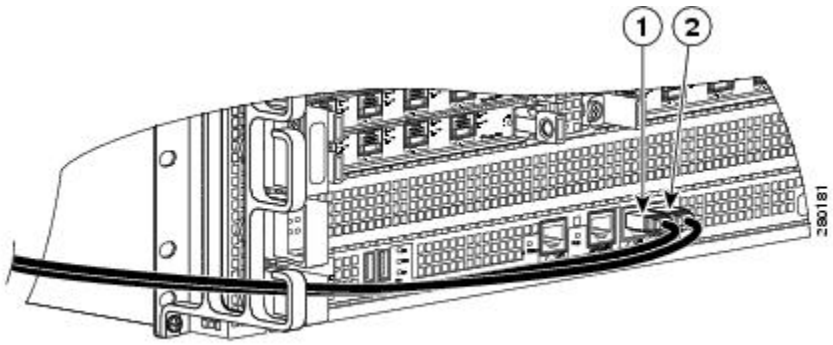

1	Console port - CON	2	Auxiliary port - AUX

The Cisco ASR 1004 Router uses RJ-45 ports for both the auxiliary port and the console port. Both the console and the auxiliary ports are asynchronous serial ports; any devices connected to these ports must be capable of asynchronous transmission.

Note A connection will not be established when setting up an out-of-band connection or modem connection in the auxiliary port and the console port.

For console and auxiliary port pinouts for the RJ-45 connector, see "Cisco ASR 1004 Router Specifications" section on page A-5 . Both ports are configured as asynchronous serial ports.

SUMMARY STEPS

1. Before connecting a terminal to the console port, configure the terminal to match the chassis console port as follows: 9600 baud, 8 data bits, no parity, 1 stop bits (9600 8N1).
2. After you establish normal router operation, you can disconnect the terminal.

DETAILED STEPS

Step 1 Before connecting a terminal to the console port, configure the terminal to match the chassis console port as follows: 9600 baud, 8 data bits, no parity, 1 stop bits (9600 8N1).

Step 2 After you establish normal router operation, you can disconnect the terminal.

Connecting the Ethernet Management Port Cable

When using the Fast Ethernet Management port in the default mode (speed-auto and duplex-auto) the port operates in auto-MDI/MDI-X mode. The port automatically provides the correct signal connectivity through the Auto-MDI/MDI-X feature. The port automatically senses a crossover or straight-through cable and adapts to it.

However, when the Fast Ethernet Management port is configured to a fixed speed (10/100/1000 Mbps) through command-line interface (CLI) commands, the port is forced to MDI mode.

When in a fixed-speed configuration and MDI mode:

- Use a crossover cable to connect to an MDI port
- Use a straight-through cable to connect to an MDI-X port

The following figure shows the MGMT Ethernet port connector.

Figure 68: Cisco ASR 1000 Series Route Processor MGMT Ethernet Port Connector

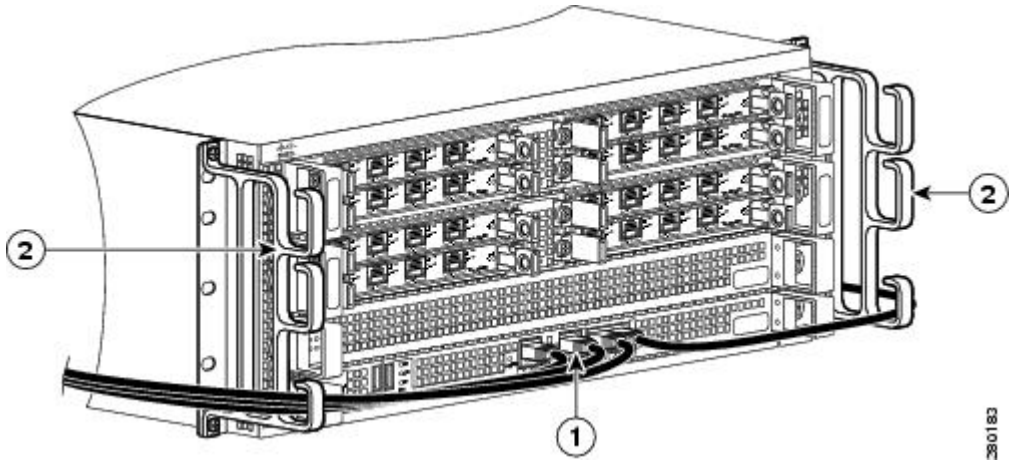

1	MGMT Ethernet port	2	Cable-management bracket and U feature device

Connecting Power to Cisco ASR 1004 Router

Warning The covers are an integral part of the safety design of the product. Do not operate the unit without the covers installed. Statement 1077

Warning When you install the unit, the ground connection must always be made first and disconnected last. Statement 1046

Warning Before performing any of the following procedures, ensure that power is removed from the DC circuit. Statement 1003

Warning Only trained and qualified personnel should be allowed to install, replace, or service this equipment. Statement 1030

This section provides the procedures for connecting AC-input and –48 VDC input power to your Cisco ASR 1004 Router.

The –48 VDC power supply for the Cisco ASR 1006, ASR 1004, and ASR 1002 routers operate at individual specifications. The following table shows the common input ranges and circuit breaker requirements.

Table 52: Cisco ASR 1000 Series Router –48 VDC Power Supply System Input Requirements

Cisco ASR 1000 Series Router DC Power Supply	**System Input Rating (Amps)**	**Circuit Breaker Amps**	**AWG # Wire**		
		Minimum	Maximum	Minimum	Maximum
Cisco ASR 1006	40	Always 50	Always AWG #6 wire		
Cisco ASR 1004	24	30	40	10	8
Cisco ASR 1002	16	20	30	12	10
For example, the Cisco ASR 1002 Router –48 VDC power supply, with 16 Amp input rating must use an AWG #12 gauge wire for a 20 A circuit breaker and an AWG #10 gauge wire for a 30 A circuit breaker.					

Note All Cisco ASR 1000 Series Router AC power supplies must be connected to a branch circuit that does not exceed 20 A.

Note Detailed instructions for removing and replacing the Cisco ASR 1000 Series AC and DC power supplies are in Chapter 14, “Removing and Replacing FRUs from the Cisco ASR 1000 Series Routers.”

Power Cords Supported by the Cisco ASR 1004 Router

Table 53: Power Cords Supported by the Cisco ASR 1004 Router , on page 180 lists the power cords that are supported by the Cisco ASR 1004 Router.

Table 53: Power Cords Supported by the Cisco ASR 1004 Router

Power Cord Item Number	Description
CAB-AC-RA	Power Cord, 110 V, Right Angle
CAB-AC10A-90L-AU	10 A AC Power Cord, Left Angle (Australia) (bundle option)
CAB-AC10A-90L-EU	10 A AC Power Cord, Left Angle (Europe) (bundle option)
CAB-AC10A-90L-IT	10 A AC Power Cord, Left Angle (Italy) (bundle option)
CAB-AC10A-90L-UK	10 A AC Power Cord, Left Angle (United Kingdom) (bundle option)
CAB-AC15A-90L-US	15 A AC Power Cord, Left Angle (United States) (bundle option)
CAB-ACA-RA	Plug, Power Cord, Australian, 10 A, Right Angle
CAB-ACB10A-RA	Power Cord, Brazil, Right Angle, 10 A
CAB-ACB16A-RA	Power Cord, Brazil, Right Angle, 16 A
CAB-ACC-RA	Power Cord China, Right Angle
CAB-ACE-RA	Power Cord Europe, Right Angle
CAB-ACI-RA	Power Cord, Italian, Right Angle
CAB-ACR-RA	Power Cord Argentina, Right Angle
CAB-ACS-RA	Power Cord, Switzerland, Right Angle
CAB-ACU-RA	Power Cord UK, Right Angle
CAB-JPN-RA	Power Cord-Japan, Right Angle

Connecting AC Input Power to Cisco ASR 1004 Router

Follow these steps to connect an AC input power supply to the Cisco 1004 chassis:

SUMMARY STEPS

1. Insert an AC power supply in power supply slot 0 or power supply slot 1 until it is fully seated.
2. Tighten the captive screws.
3. Insert the AC power cable into the power inlet.
4. Plug the power supply cable into the power source.
5. Turn the power supply switch to the On position.

DETAILED STEPS

Step 1 Insert an AC power supply in power supply slot 0 or power supply slot 1 until it is fully seated.

Step 2 Tighten the captive screws.

Step 3 Insert the AC power cable into the power inlet.

Step 4 Plug the power supply cable into the power source.

Note For additional AC power cable strain relief, secure the cable to the power supply handle by inserting a nylon cable tie through the hole in the handle and around the cable.

Figure 69: Cisco ASR 1004 Router AC Power Supply, on page 181 shows the Cisco ASR 1004 Router AC power supply.

Figure 69: Cisco ASR 1004 Router AC Power Supply

1	AC power supply Standby switch	4	AC power supply fan
2	AC power supply LEDs	5	AC power inlet
3	DB-25 alarm connector	6	AC power supply handle

Note Shielded cables must be used to connect to the DB-25 alarm connector on both the AC and –48 VDC power supplies in order to comply with FCC/EN55022/CISPR22 Class A emissions requirements. See the "How Cisco ASR1000-RP Alarm Monitoring Works" section on page 2-22 .

Step 5 Turn the power supply switch to the On position.

What to do next

This completes the procedure for connecting AC input power.

Connecting --48 VDC Input Power to Cisco ASR 1004 Router

This section describes how to connect the –48 VDC power supply in the Cisco ASR 1004 Router.

#unique_225 unique_225_Connect_42_fig_1168352 shows the –48 VDC power supply.

1	–48 VDC power supply terminal block and plastic cover	5	–48 VDC power supply ground symbol
2	–48 VDC power supply LEDs	6	–48 VDC power supply On (|)/ Off (O)
3	DB-25 alarm connector	7	–48 VDC power supply handle
4	–48 VDC power supply fan	—	—

Note Shielded cables must be used to connect to the DB-25 alarm connector on both the AC and –48 VDC power supplies in order to comply with FCC/EN55022/CISPR22 Class A emissions requirements. See the "How Cisco ASR1000-RP Alarm Monitoring Works" section on page 2-22 .

Before you begin, read these important notices:

- The color coding of the –48 VDC input power supply leads depends on the color coding of the –48 VDC power source at your site. Typically, green or green/yellow is used for ground (GND), black is used for –48 V on negative (–) terminal and red is used for RTN on the positive (+) terminal. Make certain the lead color coding you choose for the –48 VDC input power supply matches lead color coding used at the –48 VDC power source.
- For –48 VDC input power cables, select the appropriate wire gauge based on the National Electrical Code (NEC) and local codes for 60-amp service at nominal –48 VDC input voltage (–48/–60 VDC). Three pairs of cable leads, source DC (–) and source DC return (+), are required for each power distribution unit (PDU). These cables are available from any commercial cable vendor. All input power cables for the chassis should have the same wire gauge and cable lengths should match within 10 percent of deviation.

Each DC input power cable is terminated at the PDU by a cable lug. The cable lugs must be dual-hole, and have a 45-degree angle tongue. They must be able to fit over #10 power terminal stud.

Note –48 VDC input power cables must be connected to the PDU terminal studs in the proper positive (+) and negative (–) polarity. In some cases, the –48 VDC cable leads are labeled, which is a relatively safe indication of the polarity. However, you must verify the polarity by measuring the voltage between the –48 VDC cable leads. When making the measurement, the positive (+) lead and the negative (–) lead must always match the (+) and (–) labels on the PDU.

- A ground cable is required for each –48 VDC PDU. We recommend that you use at least 6-AWG multistrand copper wire. This wire is not available from Cisco Systems; it is available from any commercial cable vendor.

The ground wire cable lug should be dual-hole (as shown in Figure 70: Cisco ASR 1004 Router –48 VDC Power Supply Grounding Wire and Stud, on page 183) and able to fit over M6 terminal studs at 0.625-inch (15.88-mm) centers. Recommended lug terminal wire size Panduit part number:

- • LCD8-14A-L for 8AWG wire size
  • LCD6-14A-L for 6AWG wire size

Note To avoid hazardous conditions, all components in the area where –48 VDC input power is accessible must be properly insulated. Therefore, before installing the –48 VDC cable lugs, be sure to insulate the lugs according to the manufacturer's instructions.

Danger When you install the unit, the ground connection must always be made first and disconnected last. Statement 1046

To connect the Cisco ASR 1004 Router DC power supply, follow these steps:

SUMMARY STEPS

1. Make certain that the chassis grounding is connected before you begin installing the –48 VDC power supply.
2. Locate the terminal block and remove the plastic cover.

3. On the –48 VDC power supply terminal block, locate the **GND** connection which must be connected first and follow these steps:
4. Attach the other end of the cable to the site ground connection.
5. You must wrap the positive and negative cables with sleeving. Take each wire and cover the area from the lug to the wire with heavy shrink sleeving.
6. For easier cable-management, insert the negative cable first. Replace the ground lug with cable in the following order:
7. Tighten the Kepnut screw (use the screwdriver to tighten the screw in the terminal block to a torque of 8 in-lbs / 4 per.) and repeat the same steps for the positive stud and wire.
8. Use tie wraps to secure the wires, so that the wires are not pulled from the terminal block by casual contact. Ti-wrap studs are located below the supply terminal block.
9. Replace the terminal block plastic cover, which slides over the terminal block; then tighten the screws (tighten the screw to a torque of 5 in-lbs / 1 per.).
10. Remove the tape from the circuit-breaker switch handle and move the circuit-breaker handle to the on position, if you taped the circuit breaker.
11. Switch the On/Off circuit breaker switch to the On (|) position.

DETAILED STEPS

Step 1 Make certain that the chassis grounding is connected before you begin installing the –48 VDC power supply.

Step 2 Locate the terminal block and remove the plastic cover.

a) Unscrew and remove the two screws.
b) Slide the plastic cover off of the terminal block.

Step 3 On the –48 VDC power supply terminal block, locate the **GND** connection which must be connected first and follow these steps:

a) Using the two-hole grounding lug, replace the washers and Kepnut screw in the following order.

- • Flat washer
  • Grounding cable lug
  • Kepnut screw

b) Tighten the Kepnut screws (use the screwdriver to tighten the screw in the terminal block to a torque of 8 in-lbs / 2 per.) on the power supply studs.

Figure 70: Cisco ASR 1004 Router –48 VDC Power Supply Grounding Wire and Stud, on page 183 shows the –48 VDC power supply grounding wire and stud.

Figure 70: Cisco ASR 1004 Router –48 VDC Power Supply Grounding Wire and Stud

Step 4 Attach the other end of the cable to the site ground connection.

Caution Before you continue to install the terminal block wires, stop and perform Step 5. To prevent any contact with metal lead on the wire and the plastic cover.

Step 5 You must wrap the positive and negative cables with sleeving. Take each wire and cover the area from the lug to the wire with heavy shrink sleeving.

Figure 71: Cisco ASR 1004 Router –48 VDC Power Supply Cable Connection, on page 184 shows the –48 VDC power supply cable connection.

Figure 71: Cisco ASR 1004 Router –48 VDC Power Supply Cable Connection

1	Power supply stud and wire	4	Flat washer
2	Ground lug nut	5	Kepnut screw
3	Ground symbol	—	—

Step 6 For easier cable-management, insert the negative cable first. Replace the ground lug with cable in the following order:

a) Flat Washer
b) Ground lug with negative wire
c) Kepnut screw

Step 7 Tighten the Kepnut screw (use the screwdriver to tighten the screw in the terminal block to a torque of 8 in-lbs / 4 per.) and repeat the same steps for the positive stud and wire.

Note Secure the wires coming in from the terminal block so that they cannot be disturbed by casual contact.

Step 8 Use tie wraps to secure the wires, so that the wires are not pulled from the terminal block by casual contact. Ti-wrap studs are located below the supply terminal block.

Step 9 Replace the terminal block plastic cover, which slides over the terminal block; then tighten the screws (tighten the screw to a torque of 5 in-lbs / 1 per.).

Step 10 Remove the tape from the circuit-breaker switch handle and move the circuit-breaker handle to the on position, if you taped the circuit breaker.

Step 11 Switch the On/Off circuit breaker switch to the On (|) position.

What to do next

This completes the procedure for connecting the –48 VDC power supply in the Cisco ASR 1004 Router.

Connecting a Terminal to the Cisco ASR Series 1000 Route Processor Console Port

The Cisco ASR 1004 route processor has an asynchronous serial (EIA/TIA-232) RJ-45 console port labeled CON on its front panel. You can connect this port to most types of video terminals through use of the console cable kit that is included with your Cisco ASR 1004 Router. The console cable kit contains:

- One RJ-45 to RJ-45 crossover cable
- One RJ-45 to DB-9 (female) adapter

A crossover cable reverses pin connections from one end to the other. In other words, it connects pin 1 (at one end) to pin 8 (at the other end), pin 2 to pin 7, pin 3 to pin 6, and so on. You can identify a crossover cable by comparing the two modular ends of the cable. Hold the cable ends in your hand, side-by-side, with the tabs at the back. Ensure that the wire connected to the outside (left) pin of the left plug (pin 1) is the same color as the wire connected to the outside (right) pin of the right plug (pin 8).

Use the following procedure to connect a video terminal to the console port on a route processor.

Note Each Cisco ASR 1000 Series Route Processor 1 must have a console port connection (typically to a terminal server) if you are running a redundant configuration in the chassis.

The following shows the route processor console port.

Figure 72: Cisco ASR 1004 Router ASR 1000 Series Route Processor Console Port

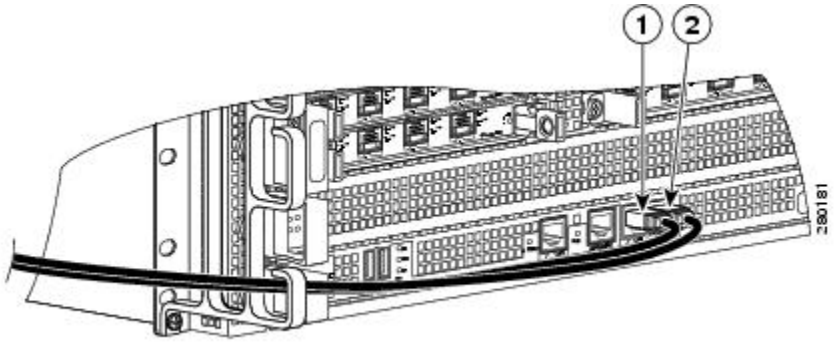

1	CON port connection	2	AUX port connection

SUMMARY STEPS

1. Connect one end of the RJ-45 cables to the serial RJ-45 port (CON) on the Cisco ASR 1000 Series Route Processor 1 (see Figure 72: Cisco ASR 1004 Router ASR 1000 Series Route Processor Console Port, on page 185).
2. Run the cable up and through the cable-management bracket and connect the other end of the RJ-45 cable to the RJ-45 adapter (see the following image).
3. Connect the adapter to your video terminal to complete the cable connection.
4. Power on your video terminal.
5. Configure your video terminal to match the following default console port settings:
6. Go to the Connecting the Network Management and Signal System Cables, on page 186 to continue the installation.

DETAILED STEPS

Step 1 Connect one end of the RJ-45 cables to the serial RJ-45 port (CON) on the Cisco ASR 1000 Series Route Processor 1 (see Figure 72: Cisco ASR 1004 Router ASR 1000 Series Route Processor Console Port, on page 185).

Step 2 Run the cable up and through the cable-management bracket and connect the other end of the RJ-45 cable to the RJ-45 adapter (see the following image).

Figure 73: Cisco ASR 1004 Router Cable-Management Bracket

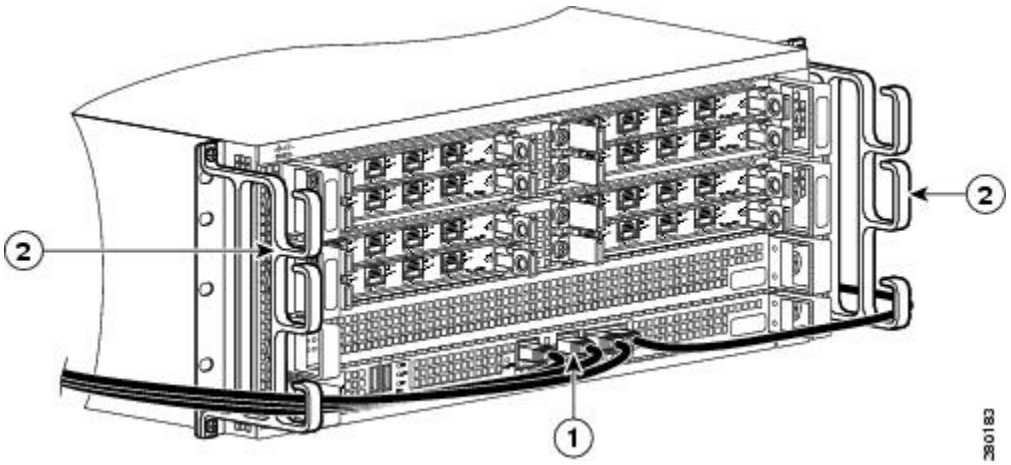

1	BITS port connection	2	Cable-management bracket U feature device

Step 3 Connect the adapter to your video terminal to complete the cable connection.

Step 4 Power on your video terminal.

Step 5 Configure your video terminal to match the following default console port settings:

- 9600 baud
- 8 data bits
- No parity generation or checking
- 1 stop bit
- No flow control

Step 6 Go to the Connecting the Network Management and Signal System Cables, on page 186 to continue the installation.

Connecting the Network Management and Signal System Cables

The Cisco ASR 1004 Router has connections to both the internal Ethernet management network and the external data network.

- T

  he internal Ethernet management network connections are made through an Ethernet port on the front panel of the Cisco ASR 1000 Series Route Processor 1.

- The external data network connections are made through front panel ports on several types of SPAs.

Keep the following guidelines in mind when connecting external cables to the Cisco ASR 1004 Router:

- To reduce the chance of interference, avoid crossing high-power lines with any interface cables.
- Verify all cabling limitations (particularly distance) before powering on the system.

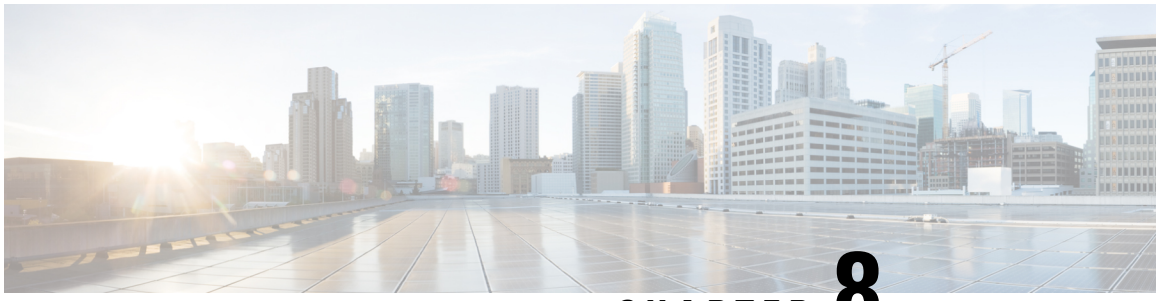

CHAPTER 8

Cisco ASR 1002 Router Overview and Installation

This chapter describes the Cisco ASR 1002 Router and provides procedures for installing the Cisco ASR 1002 Router on an equipment shelf or tabletop or in an equipment rack.

This chapter contains the following sections:

- Cisco ASR 1002 Router Description, on page 187
- Installation Methods, on page 198
- General Rack Installation Guidelines, on page 199
- Guidelines for an Equipment Shelf or Tabletop Installation, on page 200
- Equipment Shelf or Tabletop Installation, on page 201
- Rack-Mounting the Cisco ASR 1002 Router, on page 203
- Attaching the Chassis Rack-Mount Brackets, on page 204
- Installing the Cisco ASR 1002 Router in a Rack, on page 207
- Attaching the Cable-Management Bracket, on page 211
- Attaching a Chassis Ground Connection, on page 213
- Connecting the Shared Port Adapter Cables, on page 215
- Connecting the Console and Auxiliary Port Cables, on page 216
- Cisco ASR 1002 Router Power Supplies, on page 218
- Connecting a Terminal to the Cisco ASR1000-RP1 Console Port, on page 231
- Connecting Cables, on page 232

Cisco ASR 1002 Router Description

The Cisco ASR 1002 Router is part of the Cisco aggregation services family of routers. The Cisco ASR 1002 Router offers a compact form factor router that satisfies customer demands such as low power consumption and decreased usage of rack space.

The Cisco ASR 1002 Router supports three half-height SPAs and an optional built-in 4xGE SPA. The Cisco ASR 1002 Router supports all the general-purpose routing and security features of the Cisco ASR 1000 Series Routers. It uses the same internal control and data-plane architecture as the other Cisco ASR 1000 Series Routers.

The Cisco ASR 1002 Router supports:

- Cisco ASR1000-ESP5 or Cisco ASR1000-ESP10 as a field-replaceable unit (FRU)

- The Cisco Embedded Route Processor which supports 2MB upgradeable BootROM and 8 GB eUSB bulk storage.
- 1 + 1 redundant AC or DC power supplies.
- Stratum-3 network clocking per GR-1244-CORE, with T1/E1 BITS interface or SPAs as timing sources.
- A built-in 4x1GE SPA providing four small form-factor pluggable (SFP-based) GE connections, designated as SPA bay 0.

For information about the SFP transceiver modules that are compatible with Cisco ASR 1002 Built-in Gigabit Ethernet Ports (4x1GE), refer to the "Modular Optics Compatibility" section in Cisco ASR 1000 Series Aggregation Services Routers SIP and SPA Hardware Installation Guide .

The Cisco ASR 1002 Router supports upgradeable Cisco ASR1000-ESP5 or ASR1000-ESP10 assembly and the power supply modules as field-replaceable units. The Cisco integrated ASR1000-SIP10 and Cisco built-in ASR1000-RP1 assemblies are fixed into the chassis and are not upgradeable; but the shared port adapters in the SIP are field upgradable.

This section contains the following topics:

- Front View, on page 188
- Rear View, on page 189
- Cisco ASR 1002 Router Slot Numbering, on page 190

Front View

Cisco ASR 1002 router front view shows the Cisco ASR 1002 Router with modules installed.

Figure 74: Cisco ASR 1002 Router—Front View

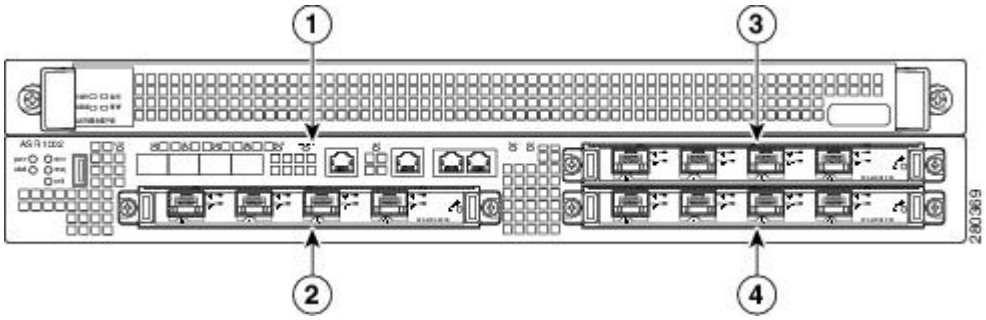

1	Embedded ASR 1000 Series Route Processor in the subslot and represents the built in 4xGE SPA.	3	SPA subslot 1
2	SPA subslot 2	4	SPA subslot 3

Note The SPAs in subslots 1-3 are field upgradeable. The SIP that the SPAs reside in is not field-upgradeable and the Cisco ASR 1000 Series Route Processor is embedded in the chassis and not field upgradeable.

Rear View

Cisco ASR 1002 router AC power supply image shows the Cisco ASR 1002 Router AC power supply.

Figure 75: Cisco ASR 1002 Router AC Power Supply

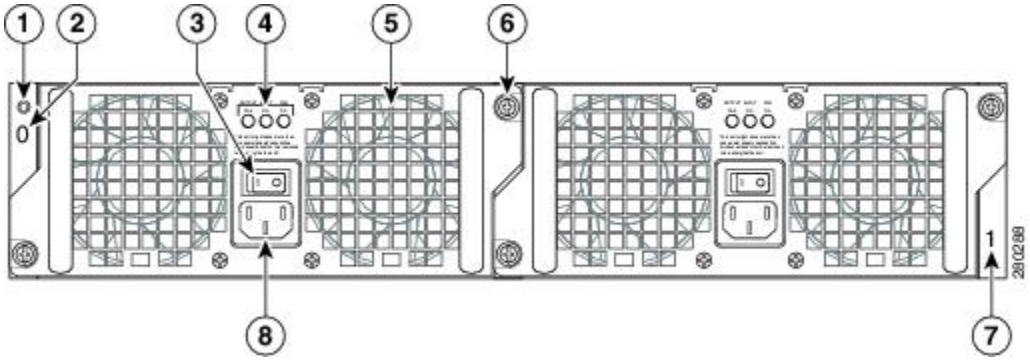

1	Chassis ESD socket	5	AC power supply fan
2	AC power supply slot number 0	6	AC power supply captive installation screw
3	AC power supply On (|) /Off (O) switch	7	AC power supply slot number 1
4	AC power supply LEDs	8	AC power inlet

c_Rear_View_1271213.xml shows the Cisco ASR 1002 Router DC power supply.

Figure 76: Cisco ASR 1002 Router DC Power Supply

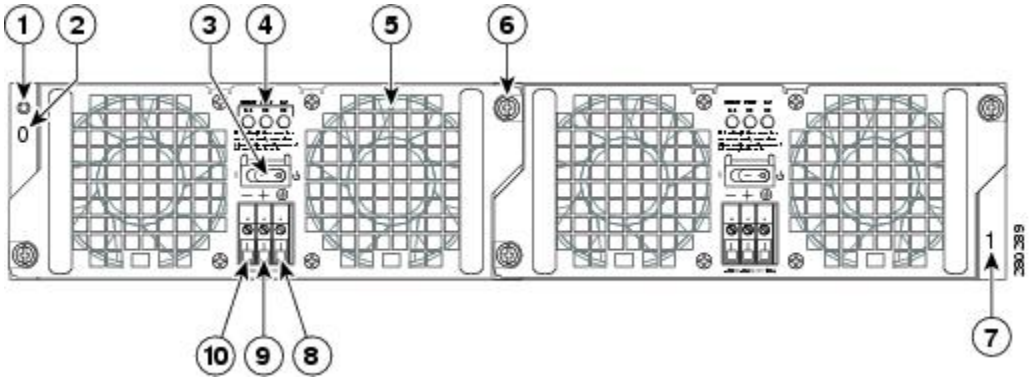

1	Chassis ESD socket	6	DC power supply captive installation screw
2	DC power supply slot 0 label	7	DC power supply slot 1 label
3	DC power supply switch Standby/On (|)	8	Ground lead
4	DC power supply LEDs	9	Positive lead
5	Power supply fan	10	Negative lead

Internal fans draw cooling air into the chassis and across internal components to maintain an acceptable operating temperature. The fans are located at the rear of the chassis. A two-hole grounding lug is located on the side of the chassis. Two power supplies, either two AC power supplies or two DC power supplies are accessed from the rear of the router.

Caution Use only AC power supplies or DC power supplies in the Cisco ASR 1002 Router. Do not mix power supply types.

Cisco ASR 1002 Router Slot Numbering

The Cisco ASR 1002 Router contains one Cisco embedded ASR1002-RP1 which is addressed as R0 and one Cisco ASR1000-ESP5 or ASR1000-ESP10 forwarding processor in slot F0. The Cisco ASR 1002 Router consists of an embedded ASR1000-RP1 and embedded ASR1000-SIP10 board supporting three half-height SPAs or 1half-height and one full-height SPA and one Cisco ASR1000-ESP5 forwarding processor.

The SPA bays are bay 1, bay 2, and bay 3. The built-in 4xGE SPA ports are located in the SPA 0 location and will be addressed as GE 0/0/x. The Cisco ASR 1002 Router provides a built-in 4-Gigabit Ethernet interface and this SPA is physically located on the Cisco embedded ASR1000-RP1 board. The Cisco ASR 1000 Series ESP card is located in slot 1 and labeled as FP0.

c_Cisco_ASR_1002_Router_Slot_Numbering_1243123.xml shows the Cisco ASR 1002 Router slot numbering.

Figure 77: Cisco ASR 1002 Router Slot Numbering

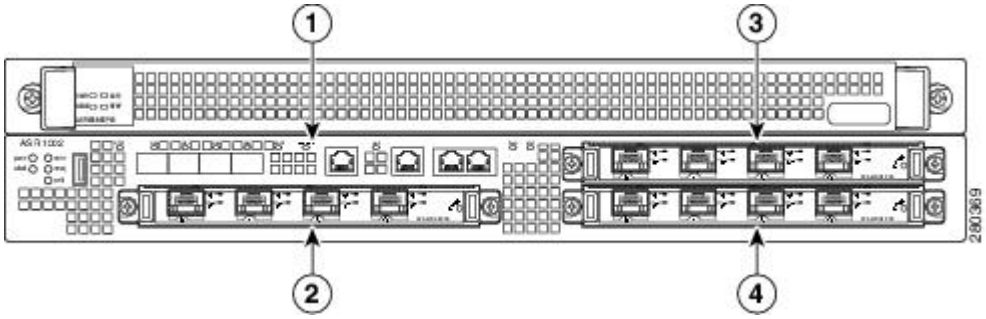

1	Embedded route processor RP0 in subslot 0	3	Cisco SPA subslot 1
2	Cisco SPA subslot 2	4	Cisco SPA subslot 3

Cisco ASR 1002 Router Components

The Cisco ASR 1002 Router system is derived from the architecture of the other Cisco ASR 1000 Series routers. The three main subassemblies of any Cisco ASR 1000 Series Routers are all supported in the Cisco ASR 1002 Router, which is the:

- C

  isco embedded ASR1000-RP1 and Cisco embedded ASR1000-SIP10 (not field upgradable)

- Cisco ASR1000-ESP5 and Cisco ASR1000-ESP10 embedded services processors are field-replaceable units (FRU)

- AC or DC power supplies which are field-replaceable units

Cisco Embedded ASR1000-RP1 for Cisco ASR 1002 Router Description

The Cisco ASR 1000 Series route processor (embedded for the Cisco ASR 1002 Router) is the central control processor and runs the network operating system.

The Cisco embedded ASR1000-RP1 supports management interfaces such as the Ethernet network management port and console and auxiliary serial ports. It has LED status indicators, an RJ-45 plug for a BITS timing reference and one USB port which can be used with smart cards for secure key distribution or for image or configuration file updates.

The Cisco embedded ASR1000-RP1 deviates from the other ASR Series Route Processor 1 for the Cisco ASR 1006 router and the Cisco ASR 1004 Router in the following ways:

- Bulk file storage is on a large eUSB device (to 8 GB supported) with no SATA hard-drive supported.
- Redundant Cisco Route Processor 1 is not supported.
- Network clock changes. No second BITS clock input supported.
- A built-in 4x1GE SPA is included. This shared port adapter provides four SFP-based GE connections.

For information about the SFP transceiver modules that are compatible with Cisco ASR 1002 Built-in Gigabit Ethernet Ports (4x1GE), refer to the "Modular Optics Compatibility" section in Cisco ASR 1000 Series Aggregation Services Routers SIP and SPA Hardware Installation Guide .

Cisco Embedded ASR1000-SIP10 and SPAs for Cisco ASR 1002 Router Description

The Cisco embedded ASR1000-SIP10 in the Cisco ASR 1002 Router is built into the Cisco ASR 1002 Router. The Cisco embedded ASR1000-SIP10 provides the physical and electrical termination for up to three half-height SPAs or one full-height and one half-height SPA. Double-wide SPAs are not supported. The fourth SPA slot is connected to the built-in 4xGE SPA that resides on the Cisco embedded ASR1000-RP1.

The Cisco embedded ASR1000-SIP10 interface, like the Cisco ASR 1006 Router and Cisco ASR 1004 Router, supports all Cisco embedded ASR1000-SIP10 functions and services. However, the Cisco embedded ASR1000-SIP10 differs in the following areas:

- Functions as the base board for Cisco embedded ASR1000-RP1
- Only supports three removable half-height SPAs on Bay 1, 2, and 3. The fourth SPA is a built-in 4xGE SPA on Bay 0, which is located on the Cisco embedded ASR1000-RP1.
- Is not a field-replaceable unit (FRU) and does not support online insertion and removal (OIR).



Note The shared port adapters (SPAs) on the Cisco embedded ASR1000-SIP10 in the Cisco ASR 1002 Router do support online insertion and removal.

The Cisco ASR 1002 Router embedded ASR1000-RP1 also provides the circuitry for the built-in 4xGE SPA.

Cisco ASR1000-ESP5 and ASR1000-ESP10 Description

The Cisco ASR 1002 Router supports the Cisco ASR1000-ESP5 or Cisco ASR1000-ESP10 embedded services processors. The Cisco ASR 1002 Router does not support the Cisco ASR1000-ESP20.

Cisco ASR1000-ESP10 image shows the LEDs on the Cisco ASR1000-ESP10.

Figure 78: Cisco ASR1000-ESP10 LEDs

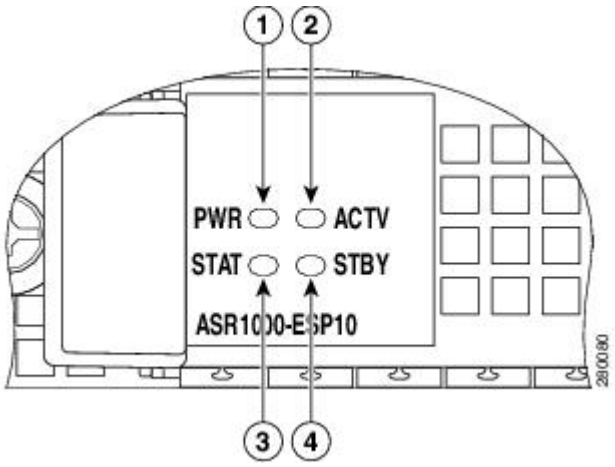

c_Cisco_ASR1000-ESP5_and_ASR1000-ESP10_Description_1222814.xml describes the Cisco ASR1000-ESP5 and Cisco ASR1000-ESP10 LEDs.

Table 54: Cisco ASR1000-ESP5 and Cisco ASR1000-ESP10 LEDs

No.	LED Label	LED	Color	Behavior in the Power-Up State
1	PWR	Power	Solid green	All power supplies are within operational limits.
			Off	Off, the router is in standby mode.
2	ACTV	Active	Green	The embedded services processor is green when active.
3	STAT	STATUS	Green	Code has successfully downloaded and is operational.
			Yellow	BOOT ROM has successfully loaded.
			Red	Not booted.
4	STBY	Standby	None	Will always be off.

Note The Cisco ASR 1000-ESP5 can only be used in the Cisco ASR 1002 Router.

Power Supplies in the Cisco ASR 1002 Router

The Cisco ASR 1002 Router power supply module supports the following Cisco power supplies:

- AC power supply operates between 85VAC to 264VAC and DC operates between –40.5 to –72VDC
- –48 VDC power supply operates between
- +24 VDC power supply operates

The power supplies are installed into the rear of the chassis and are hot pluggable. The Cisco ASR 1002 Router supports up to 588 W input power from an infrastructure standpoint (cooling capacity, midplane and power distribution) but initial power supply development limit is up to 470 W output (AC and DC Input).

AC Power Supply for Cisco ASR 1002 Router

The AC power supply input inlet is an IEC connector with AC switch and the current rating on the connector and switch is 10 Amps. The AC power supply is secured into the chassis with two captive screws mounted on the faceplate.

The following table describes the AC power supply LEDs on the Cisco ASR 1002 Router.

Table 55: Cisco ASR 1002 Router AC Power Supply LEDs

LED Label	LED	Color	Description
INPUT OK	Power supply activity	Green	The AC input voltage is greater than 85V.
		None	If the LED is not illuminated, then either the input voltage is less than 70V, or the power supply is turned off. If the AC input voltage is between 70V and 85V, the INPUT OK LED can be on, off, or flashing.
FAN OK	Power supply fan activity A bi-color LED indicates fan status.	Green	All fans are operational.
		Red	A fan failure is detected.
OUTPUT FAIL	Power supply activity	Red	If the INPUT OK LED is illuminated, this LED is red if the DC output voltages are below the minimum limit or above the maximum limit. If the INPUT OK LED is not illuminated, this LED might be off or red.

The following image shows the AC Power Supply for the Cisco ASR 1002 Router.

Figure 79: AC Power Supply for the Cisco ASR 1002 Router

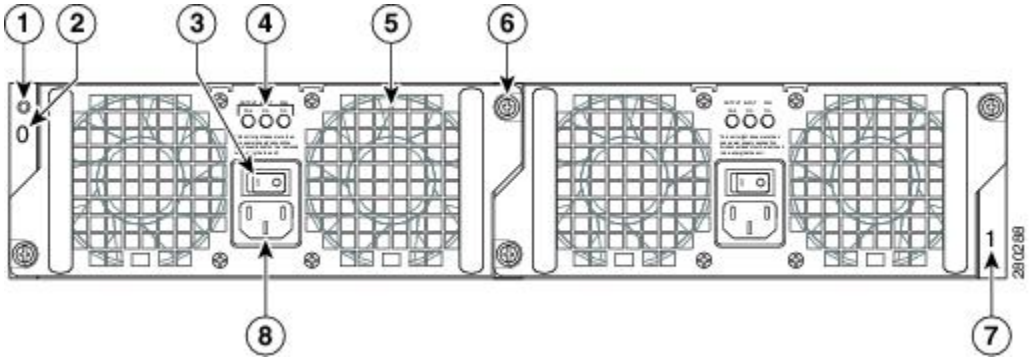

1	Chassis ESD socket	5	AC power supply fan
2	AC power supply slot number 0	6	AC power supply captive installation screw
3	AC power supply On (|) /Off (O) switch	7	AC power supply slot number 1
4	AC power supply LEDs	8	AC power supply inlet

48 VDC Power Supply for Cisco ASR 1002 Router

The –48 VDC power supply input connector is a Euro-style terminal block. It is compliant with safety agencies' guidelines and electrical requirements of the supply. The DC power supply operates within specification from –40.5VDC to –72VDC continuously once the power supply DC input turn on threshold of –43.5 V has been reached.

The –48 VDC power input connector Euro-style terminal block will accept three wires: one positive polarity, one negative polarity, and one ground wire. There are provisions on the front panel to wire tie and strain relief the DC input wiring. The connection order is negative (–), positive (+), and GND. The DC power supply is secured into the system chassis with two captive screws mounted on the faceplate.

The following image shows the –48 VDC Power Supply for the Cisco ASR 1002 Router.

Figure 80: –48 VDC Power Supply for the Cisco ASR 1002 Router

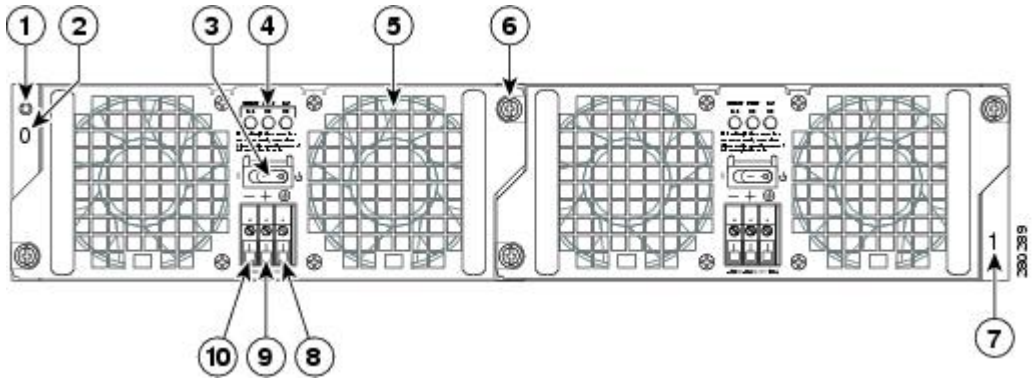

1	Chassis ESD socket	6	Power supply captive installation screw
2	Power supply slot 0 label	7	Power supply slot 1 label
3	Power supply switch Standby/On (|)	8	Ground lead
4	Power supply LEDs	9	Positive lead
5	Fan	10	Negative lead

The Cisco ASR 1002 Router –48 VDC power supply LEDs are described in the following table.

Table 56: Cisco ASR 1002 Router –48 VDC Power Supply LEDs

LED Label	LED	Color	Description
INPUT OK	A bi-color LED indicates presence of input voltage	Green	LED illuminates green to signal that the DC power supply input voltage is greater than 43.5VDC at turn-on and remains green down to 39VDC.
		Amber	The LED illuminates amber if the power supply turns off due to low input voltage (falls below 39VDC) and indicates that there is still a hazard present (voltage on the terminal block). The LED remains amber and is active to around 20 V +/-5 V. The LED is not illuminated if the input is below 15 V.
FAN OK	A bi-color LED indicates power supply fan status	Green	The LED illuminates s green when all fans are operational.
		Red	The LED illuminates red when a fan failure is detected.
OUTPUT FAIL	Power supply activity	Red	When the LED is off, it signals that the DC output voltage are within the normal operating range. Output voltage between the minimum and maximum limits will not create an output fail alarm, and output voltages below the minimum or above the maximum will create an Output Fail alarm. Led illuminates red to indicate that the DC output is out of the specified range. When you turn the power supply on, the red LED illuminates for two to three seconds to test LED operation before going off.

The output voltage alarm is declared when the output voltage is below the low end of the minimum or above the high end of the maximum limits. When the output voltage is above the high end of the minimum or below the low end of the maximum limits, the red state will not be activated.

The following table shows the –48 VDC power supply output voltage alarm range.

Table 57: –48 VDC Power Supply Output Voltage Alarm Threshold Ranges

Output	Minimum	Maximum
12V	10.0-11.2V	12.8-13.8V
3.3V	2.6 - 3.0 V	None

24 VDC Power Supply for Cisco ASR 1002 Router

This section provides information about the +24 VDC power supplies on the rear of the Cisco ASR 1002 Router. The recommended branch circuit breaker for the Cisco ASR 1002 Router +24 VDC power supply is a 40 A UL listed circuit breaker.

The Cisco ASR 1002 Router has two of the same type power supplies in power supply slot 0 and power supply slot 1. The power supply slot identifiers are zero (0) on the left side of the chassis rear and one (1) on the right side of the chassis rear. The power supply switch is a Standby switch and is not considered a disconnect.

The +24 VDC power supply uses a spring-loaded terminal block. The input terminal block requires maximum 8AWG multi-strand wiring to support input current. The terminal block is compliant with safety agencies' guidelines and electrical requirements of the supply. Use the tie wraps to dress the input cable wires; there are two tie wrap tabs on the +24 VDC power supply. The +24 VDC power supply unit is secured into the system chassis with two captive screws mounted on the faceplate.

The following image shows the +24 VDC Power Supply for the Cisco ASR 1002 Router.

Figure 81: Cisco ASR 1002 Router +24 VDC Power Supply

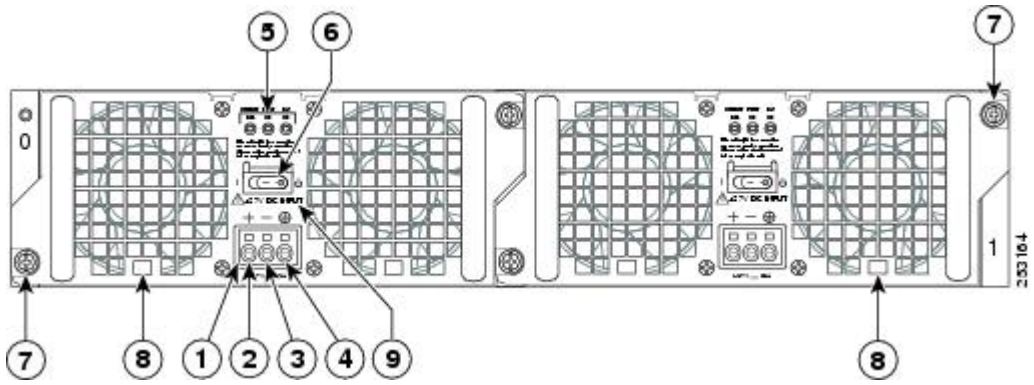

1	+24 VDC terminal block	6	Standby/On switch
2	Positive (+) lead	7	Captive fastener
3	Negative (-) lead	8	Power supply tabs
4	Ground (GND) lead	9	+27 VDC INPUT label
5	Power supply LEDs	—	—

The Cisco ASR 1002 Router +24 VDC power supply LEDs are defined in the following table.

Table 58: Cisco ASR 1002 Router +24 VDC Power Supply LEDs

LED Label	LED	Color	Description
OUTPUT FAIL	Power supply activity	Red	When the LED is off, it signals that the +24 VDC output voltage are within the normal operating range. Output voltage between the minimum and maximum limits will not create an output fail alarm, and output voltages below the minimum or above the maximum will create an Output Fail alarm. When you turn the power supply on, the red LED illuminates for two to three seconds to test LED operation before going off.
INPUT OK	A bi-color LED indicates presence of input voltage	Green	LED illuminates green to signal that voltage is > or = to 20VDC at turn-on and down to 19.0VDC (+/- 0.5 V tolerance).
		Amber	The LED illuminates amber when the input voltage is active down to 16.0VDC and indicates that there is still a voltage present (voltage on the terminal block). The LED remains amber and is active to around 10 V. The LED can be OFF below 15.8VDC.
FAN OK	A bi-color LED indicates power supply fan status	Green	The LED illuminates s green when all fans are operational.
		Red	The LED illuminates red when a fan failure is detected.

24 VDC Power System Input for Cisco ASR 1002 Router

The +24 VDC power supply operates within specification between +21 and +36 VDC continuously once the power supply DC input is turned on. The power supply shall measure the input voltage at the terminals of the power supply and turn off the supply when the input voltage reaches 19.0 volts +/- 0.5 volts. Once this low voltage threshold is reached, the power supply does not resume operation until the input voltage has reached 20.0 volts +/- 0.5 volts. Once the turn-on threshold of 20 volts is reached, then the +24 VDC power supply meets all specification requirements down to low voltage threshold of 19 volts (+/- tolerance).

+24 VDC Power System Output for Cisco ASR 1002 Router

The +24 VDC power supply output tolerance is defined in Cisco ASR 1002 Router +24 VDC Power System Output Voltage and Current table under all combinations of +24 VDC input line variation. Total system power consumption should not exceed 470 watts or output rating of each power supply.

Note Two power supplies are used for redundant operation. System total power consumption shall never exceed rating of one power supply to maintain redundancy.

Table 59: Cisco ASR 1002 Router +24 VDC Power System Output Voltage and Current

Output Voltage	+12 VDC	+3.3 V
Minimum	11.80	3.20
Nominal	12.00	3.30
Maximum	12.20	3.40
Output Current		
Minimum	2.0 A	0.10 A
Maximum	39 A	3.125 A

Note Any combination of output voltage/currents cannot exceed total power rating of 470 Watts.

+24 VDC Power Supply Important Notices

The following items list important notes regarding the +24 VDC power supply in the Cisco ASR 1002 Router:

- Output Voltage Alarm Threshold—The Output Voltage Alarm is declared when the output voltage is below the low end of the minimum or above the high end of the maximum limits (as shown in VDC Output Voltage Alarm Threshold Ranges table). When the output voltage is above the high end of the minimum or below the low end of the maximum limits, then the Red state is not activated.

Table 60: +24 VDC Output Voltage Alarm Threshold Ranges

Output	Minimum	Maximum
12V	10.0-11.2V	12.8-13.8V
3.3V	2.6 – 3.0V	None

- Temperature—If a single fan fails, the power supply meets the functional requirements specified in Table 24. Above 55°C with less than two fans, calculated MTBF does not apply; however all component stress remains within the manufacturer's specified rating.
- Thermal Shutdown—The +24 VDC power supply will shut down to protect its components due to excessive internal temperature. The +24 VDC power supply then automatically restarts if the internal temperature returns to a safe operating level.

Power Cords Supported by the Cisco ASR 1002 Router

The following table lists the power cords that are supported by the Cisco ASR 1002 Router.

Table 61: Power Cords Supported by the Cisco ASR 1002 Router

Power Cord Item Number	Description
CAB-AC-RA	Power Cord, 110 V, Right Angle
CAB-ACA-RA	Plug, Power Cord, Australian, 10 A, Right Angle
CAB-ACB10A-RA	Power Cord, Brazil, Right Angle, 10 A
CAB-ACC-RA	Power Cord China, Right Angle
CAB-ACE-RA	Power Cord Europe, Right Angle
CAB-ACI-RA	Power Cord, Italian, Right Angle
CAB-ACR-RA	Power Cord Argentina, Right Angle
CAB-ACS-RA	Power Cord, Switzerland, Right Angle
CAB-ACU-RA	Power Cord UK, Right Angle
CAB-IND-RA	Power Cord India, Right Angle
CAB-JPN-RA	Power Cord-Japan, Right Angle

Installation Methods

Cisco ASR 1002 Router is designed for standalone, two rail 19-inch rack-mount (front rail only), four rail 19-inch rack-mount (front and rear rail).

Although rack-mounting is the preferred method of installation for the Cisco ASR 1002 Router, you can mount the chassis on an equipment shelf or tabletop.

Note The Cisco ASR 1002 Router usually ships fully loaded. However, you can remove components from the chassis to make the chassis lighter for your rack installation, such as the power supplies.

Warning This warning symbol means danger. You are in a situation that could cause bodily injury. Before you work on any equipment, be aware of the hazards involved with electrical circuitry and be familiar with standard practices for preventing accidents. Use the statement number provided at the end of each warning to locate its translation in the translated safety warnings that accompanied this device. Statement 1071

Warning Before you install, operate, or service the system, read the *Regulatory Compliance and Safety Information for Cisco ASR 1000 Series Aggregation Services Routers* publication. This document provides important safety information you should know before working with the system. Statement 200

Note You have already unpacked your chassis and read all the site requirements for your new equipment. Proceed with the installation.

General Rack Installation Guidelines

When planning your rack installation, consider the following guidelines:

- The Cisco ASR 1002 Router requires a minimum of 3.5 inches or 8.9 cm rack units of vertical rack space. Measure the proposed rack location before mounting the chassis in the rack.
- Before using a particular rack, check for obstructions (such as a power strip) that could impair rack-mount installation. If a power strip does impair a rack-mount installation, remove the power strip before installing the chassis, and then replace it after the chassis is installed.
- Allow sufficient clearance around the rack for maintenance. If the rack is mobile, you can push it back near a wall or cabinet for normal operation and pull it out for maintenance (installing or moving cards, connecting cables, or replacing or upgrading components). Otherwise, allow 19 inches (48.3 cm) of clearance to remove field-replaceable units.
- Maintain a minimum clearance of 3 inches on the front and back sides of the chassis for the cooling air inlet and exhaust ports, respectively. Avoid placing the chassis in an overly congested rack or directly next to another equipment rack; otherwise, the heated exhaust air from other equipment can enter the inlet air vents and cause an overtemperature condition inside the router.

Caution To prevent chassis overheating, never install a Cisco ASR 1002 Router in an enclosed room that is not properly ventilated or air conditioned.

- Always install heavier equipment in the lower half of a rack to maintain a low center of gravity to prevent the rack from falling over.
- Install and use the cable-management brackets included with the Cisco ASR 1002 Router to keep cables organized and out of the way of the cards and processors. Ensure that cables from other equipment already installed in the rack do not impair access to the cards or require you to disconnect cables unnecessarily to perform equipment maintenance or upgrades.
- Install rack stabilizers (if available) before you mount the chassis.
- Provide an adequate chassis ground (earth) connection for your router chassis.

In addition to the preceding guidelines, review the precautions for avoiding excessive temperature conditions in the Site Environmental Requirements" section on page 5-9 .

The following table provides the Cisco ASR 1002 Router dimensions and weight information.

Table 62: Cisco ASR 1002 Router Dimensions and Weight

Cisco ASR 1002	Dimensions
Depth	22.50 in. (57.15 cm)(including card handles, cable-management brackets, power supply handles).
Height	3.47 in. (8.813 cm) - 2RU rack-mount per EIA RS-310
Width	17.25 in. (43.815 cm) - 19 inch rack-mount
Weight	40 lb (18.143 k) - fully configured

Guidelines for an Equipment Shelf or Tabletop Installation

The chassis should already be in the area where you will install it. If you have not determined where to install your chassis, see the Cisco ASR 1000 Series Routers Component Overview" section on page 2-1 for information about site considerations.

If you are not rack-mounting your Cisco ASR 1000 series chassis, place it on a sturdy equipment shelf or tabletop.

When installing the Cisco ASR 1002 Router on an equipment shelf or tabletop, ensure that the surface is clean and that you have considered the following:

- The Cisco ASR 1002 Router requires at least 3 inches (7.62 cm) of clearance at the inlet and exhaust vents (the front and top/rear sides of the chassis).
- The Cisco ASR 1002 Router should be installed off the floor. Dust that accumulates on the floor is drawn into the interior of the router by the cooling fans. Excessive dust inside the router can cause overtemperature conditions and component failures.
- There must be approximately 19 inches (48.3 cm) of clearance at the front and rear of the chassis to install and replace FRUs, or to access network cables and equipment.
- The Cisco ASR 1002 Router needs adequate ventilation. Do not install it in an enclosed cabinet where ventilation is inadequate.

- Have the cable-management bracket available if you plan to install it on the front of the chassis.
- An adequate chassis ground (earth) connection exists for your router chassis (see the Attaching a Chassis Ground Connection, on page 213 section).
- Always follow proper lifting practices as outlined in the Electrical Safety" section on page 5-21 , when handling the chassis.

Equipment Shelf or Tabletop Installation

To mount your Cisco ASR 1002 Router on an equipment shelf or tabletop, follow these steps.

Remove any debris and dust from the tabletop or platform, as well as the surrounding area. Lift the chassis into position on the equipment shelf or tabletop (see Equipmet Shelf for Tabletop Installation image .

Warning

At least two people are required to lift the chassis onto a tabletop or platform. To prevent injury, keep your back straight and lift with your legs, not your back. Statement 164 The chassis in the follwing image does not represent the Cisco ASR 1002 Router.

Figure 82: Lifting the Chassis

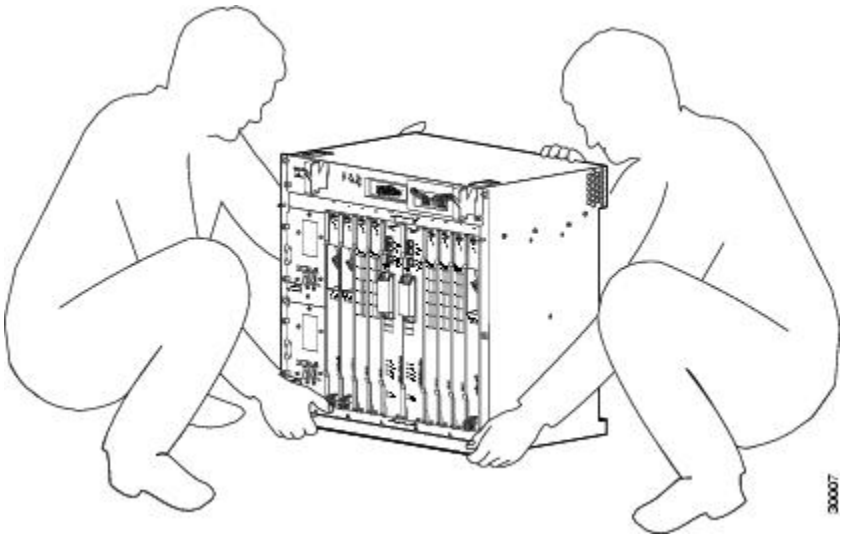

SUMMARY STEPS

1. Attach the front rack-mount brackets. Locate the threaded holes in the front sides of the chassis (first holes beyond the vent holes) and use the package of black screws that shipped with the chassis.
2. Align the front rack-mount bracket to one side of the chassis.
3. Insert and tighten the screws on one side.
4. Repeat Step 2 through Step 3 on the other side of the chassis. Use all screws to secure the rack-mount brackets to the chassis.

5. Gather the two cable-management brackets and screws shipped with your chassis. t_Equipment_Shelf_or_Tabletop_Installation_9100430.xml shows cable-management brackets attached on the front of the Cisco ASR 1002 Router.
6. Screw the cable-management bracket to each side of the rack-mount brackets already attached to the chassis. Use two screws for each cable-management bracket. Use the package of four screws.
7. Check that all screws are securely tightened.
8. Go to Attaching a Chassis Ground Connection, on page 213the to continue the installation.

DETAILED STEPS

Step 1 Attach the front rack-mount brackets. Locate the threaded holes in the front sides of the chassis (first holes beyond the vent holes) and use the package of black screws that shipped with the chassis.

Step 2 Align the front rack-mount bracket to one side of the chassis.

Step 3 Insert and tighten the screws on one side.

Step 4 Repeat Step 2 through Step 3 on the other side of the chassis. Use all screws to secure the rack-mount brackets to the chassis.

Note: The chassis rack-mount brackets must be installed first so that you can attach the cable-management brackets to the chassis rack-mount brackets after the chassis is installed in the rack.

Step 5 Gather the two cable-management brackets and screws shipped with your chassis. t_Equipment_Shelf_or_Tabletop_Installation_9100430.xml shows cable-management brackets attached on the front of the Cisco ASR 1002 Router.

Note Make certain that the cable-management 'U' feature device has the open end pointing upwards when you attach it to the chassis

Figure 83: Attaching the Cable-Management Brackets to the Cisco ASR 1002 Router

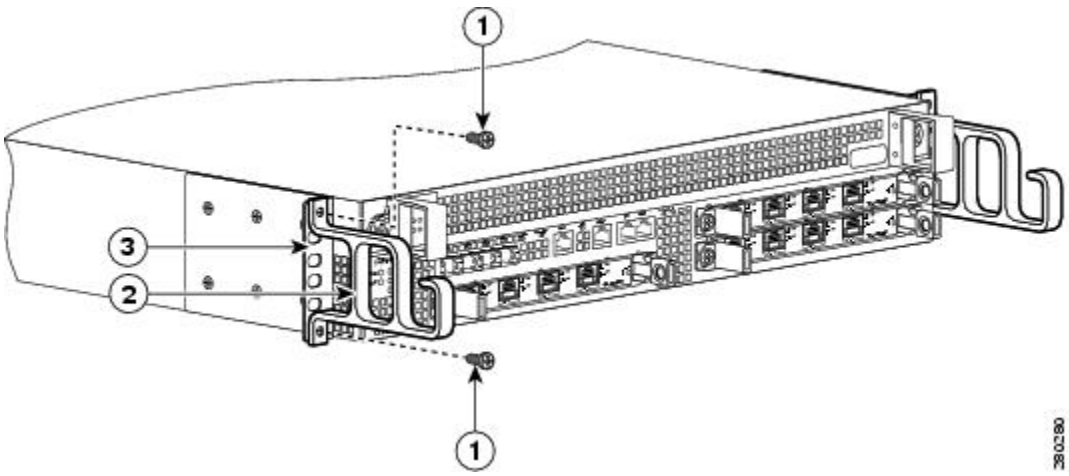

1	Cable-management bracket top and bottom screw	3	Chassis front rack-mount bracket
2	Cable-management bracket	—	—

Step 6 Screw the cable-management bracket to each side of the rack-mount brackets already attached to the chassis. Use two screws for each cable-management bracket. Use the package of four screws.

Step 7 Check that all screws are securely tightened.

Step 8 Go to Attaching a Chassis Ground Connection, on page 213the to continue the installation.

Rack-Mounting the Cisco ASR 1002 Router

The Cisco ASR 1002 Router can be installed in an existing rack with equipment or in an empty rack with no equipment: The chassis can be mounted in either rack types:

- Two-post rack, either 19 inch or 23 inch. Inner clearance (the width between the inner sides of the two posts or rails) must be at least 19 inches (48.26 cm). The height of the chassis is 3.47 inches (8.8 cm). Airflow through the chassis is from front to back.

Note If you are using a two-post rack secure the rack to the floor surface to prevent tipping and avoid bodily.

- Four post, 19-inch equipment rack. Inner clearance (the width between the inner sides of the two posts or rails) must be at least 19 inches (48.26 cm). The height of the chassis is 3.47 inches (8.8 cm). Airflow through the chassis is from front to back.

Note When handling the chassis, always follow proper lifting practices. See the Chassis-Lifting Guidelines” section on page 5-23 .

The Cisco ASR 1002 Router can be installed with both front or rear rack-mount brackets.

Verifying Rack Dimensions

Before you install the chassis, measure the space between the vertical mounting flanges (rails) on your equipment rack to verify that the rack conforms to the measurements shown in t_Verifying_Rack_Dimensions_1202731.xml.

SUMMARY STEPS

1. Mark and measure the distance between two holes on the left and right mounting rails.
2. Measure the space between the inner edges of the left front and right front mounting flanges on the equipment rack.

DETAILED STEPS

Step 1 Mark and measure the distance between two holes on the left and right mounting rails.

The distance should measure 18.31 inches ± 0.06 inches (46.5 cm ± 0.15 cm).

Note Measure for pairs of holes near the bottom, middle and top of the equipment rack to ensure that the rack posts are parallel.

Step 2 Measure the space between the inner edges of the left front and right front mounting flanges on the equipment rack.

The space must be at least 17.7 inches (45 cm) to accommodate the chassis which is 17.25 inches (43.8 cm) wide and fits between the mounting posts on the rack.

Figure 84: Verifying Equipment Rack Dimensions

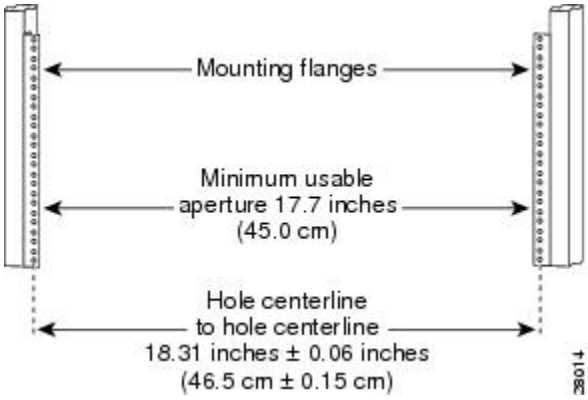

Attaching the Chassis Rack-Mount Brackets

This section explains how to attach the front and rear rack-mount brackets to the chassis. Before installing the chassis in the rack, you must install the rack-mount brackets on each side of the chassis.

The parts and tools required for installing the rack-mount brackets and cable-management brackets are listed in the Tools and Equipment" section on page 5-23 .

Note The cable-management brackets are attached to the chassis after you install the chassis rack-mount brackets on the chassis and mount the chassis in the rack.

Chassis Front Rack-Mount Brackets

Determine where in the rack you want the chassis to be mounted. If you are mounting more than one chassis in the rack, then start from the bottom up or the center of the rack.
t_Chassis_Front_Rack-Mount_Brackets_1106715.xml shows the brackets attached to the chassis. Depending on the bracket holes you use, the chassis may protrude in the rack.

To install the front rack-mount brackets on the Cisco ASR 1002 Router, perform the following steps:

SUMMARY STEPS

1. Locate the threaded holes on the side of the chassis. Make certain that you hold the front rack-mount bracket with the ear and holes facing outward and towards the front of the chassis.
2. Position the front rack-mount bracket top hole with the chassis first top hole behind the side vent holes.
3. Insert and tighten the black screws on one side.

4. Repeat Step 1 through Step 3 on the other side of the chassis. Use black screws to secure the rack-mount brackets to the chassis.
5. Install the chassis in a rack. To install the Cisco ASR 1002 Router in a rack, go to the Installing the Cisco ASR 1002 Router in a Rack, on page 207.

DETAILED STEPS

Step 1 Locate the threaded holes on the side of the chassis. Make certain that you hold the front rack-mount bracket with the ear and holes facing outward and towards the front of the chassis.

The following image shows where to attach the front rack-mount brackets to the Cisco ASR 1002 Router.

Figure 85: Attaching the Front Rack-Mount Brackets to the Cisco ASR 1002 Router

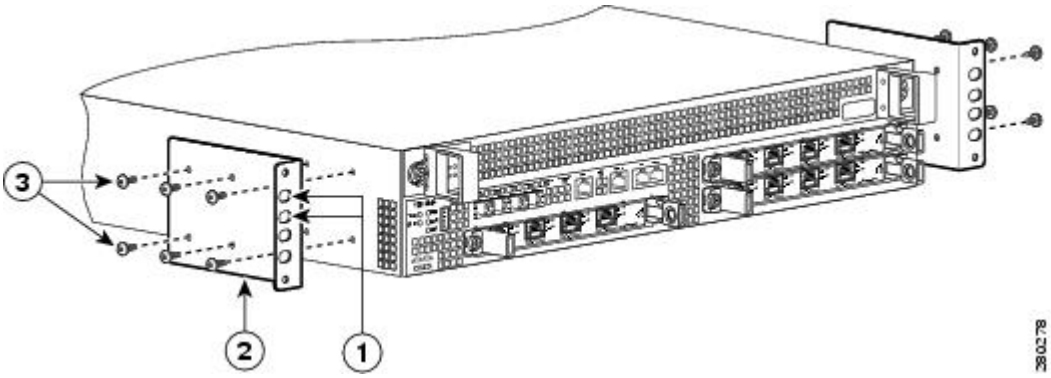

1	Front rack-mount bracket ear and holes	3	Front rack-mount bracket screws
2	Front rack-mount bracket		

Step 2 Position the front rack-mount bracket top hole with the chassis first top hole behind the side vent holes.

Step 3 Insert and tighten the black screws on one side.

Step 4 Repeat Step 1 through Step 3 on the other side of the chassis. Use black screws to secure the rack-mount brackets to the chassis.

Step 5 Install the chassis in a rack. To install the Cisco ASR 1002 Router in a rack, go to the Installing the Cisco ASR 1002 Router in a Rack, on page 207.

Chassis Rear Rack-Mount Brackets

If you are rack-mounting the chassis using the rear rack-mount brackets, then this type of installation provides for the chassis being recessed in the rack.

To install the rear rack-mount brackets on the Cisco ASR 1002 Router, perform the following steps:

SUMMARY STEPS

1. Locate the threaded holes on the rear side of the chassis. Make certain that you hold the rear rack-mount bracket with the ear and holes facing outward and towards the rear of the chassis.

2. Position the rear rack-mount bracket top hole with the chassis top hole from the back.
3. Insert and tighten the screws on one side.
4. Repeat Step 1 through Step 3 on the other side of the chassis. Use the remaining screws to secure the rear rack-mount brackets to the chassis.

DETAILED STEPS

Step 1 Locate the threaded holes on the rear side of the chassis. Make certain that you hold the rear rack-mount bracket with the ear and holes facing outward and towards the rear of the chassis.

The followoing shows where to attach the rear rack-mount brackets to the Cisco ASR 1002 Router.

Figure 86: Attaching the Rear Rack-Mount Brackets to the Cisco ASR 1002 Router

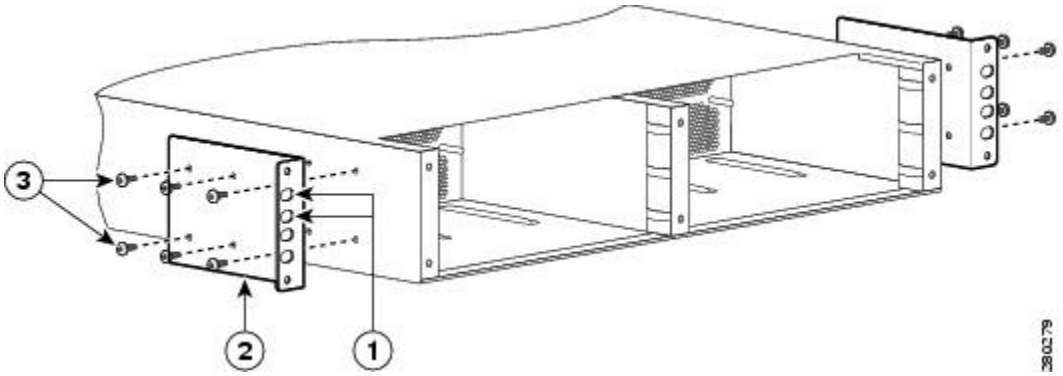

1	Rear rack-mount bracket ear and holes	3	Rear rack-mount bracket screws
2	Rear rack-mount bracket	—	—

Step 2 Position the rear rack-mount bracket top hole with the chassis top hole from the back.

Step 3 Insert and tighten the screws on one side.

Step 4 Repeat Step 1 through Step 3 on the other side of the chassis. Use the remaining screws to secure the rear rack-mount brackets to the chassis.

What to do next

This completes the steps for attaching the rear rack-mount brackets to the Cisco ASR 1002 Router.

⚠

Caution To make installation easier, before you mount the ASR 1002 Router in a rack, make certain you read which rack-mount bracket ear holes to use when positioning the chassis in the rack. As a result of using the designated ear holes on the rack-mount bracket, the cable-management bracket installation will be made easier.

Installing the Cisco ASR 1002 Router in a Rack

After installing the rack-mount brackets on the chassis, you mount the chassis by securing the rack-mount brackets to two posts or mounting strips in the rack using the screws provided. Because the rack-mount brackets support the weight of the entire chassis, be sure to use all screws to fasten the two rack-mount brackets to the rack posts.



Warning To prevent bodily injury when mounting or servicing this unit in a rack, you must take special precautions to ensure that the system remains stable. The following guidelines are provided to ensure your safety:-This unit should be mounted at the bottom of the rack if it is the only unit in the rack.-When mounting this unit in a partially filled rack, load the rack from the bottom to the top with the heaviest component at the bottom of the rack.-If the rack is provided with stabilizing devices, install the stabilizers before mounting or servicing the unit in the rack. Statement 1006

We recommend that you allow at least 1 or 2 inches (2.54 or 5.08 cm) of vertical clearance between the router and any equipment directly above and below it.

To install the chassis in the rack, perform the following steps:

SUMMARY STEPS

1. On the chassis, ensure that all screw fasteners on the installed components are securely tightened.
2. Make sure that your path to the rack is unobstructed. If the rack is on wheels, ensure that the brakes are engaged or that the rack is otherwise stabilized. See the next sections on the types of racks you can use to install the chassis.
3. (Optional) Install a shelf in the rack to support the Cisco ASR 1002 Router. If you use a shelf, this will help support the chassis while you secure it to the rack.
4. With two people, lift the chassis into position between the rack posts.
5. Align the mounting bracket holes with the rack post holes and attach the chassis to the rack.
6. Position the chassis until the rack-mounting flanges are flush against the mounting rails on the rack.
7. Hold the chassis in position against the mounting rails in the equipment rack and follow these steps:
8. Tighten all screws on each side to secure the chassis to the equipment rack.

DETAILED STEPS

Step 1 On the chassis, ensure that all screw fasteners on the installed components are securely tightened.

Step 2 Make sure that your path to the rack is unobstructed. If the rack is on wheels, ensure that the brakes are engaged or that the rack is otherwise stabilized. See the next sections on the types of racks you can use to install the chassis.

Step 3 (Optional) Install a shelf in the rack to support the Cisco ASR 1002 Router. If you use a shelf, this will help support the chassis while you secure it to the rack.

Step 4 With two people, lift the chassis into position between the rack posts.

Step 5 Align the mounting bracket holes with the rack post holes and attach the chassis to the rack.

Note If you are using a shelf then raise the chassis to the level of the shelf. Let the bottom of the chassis rest on the brackets, but continue to support the chassis.

Step 6 Position the chassis until the rack-mounting flanges are flush against the mounting rails on the rack.

Tip To allow space to attach the cable-management brackets to the chassis in the rack easily, make certain that you use the rack-mount bracket ear holes specified in the next steps.

Step 7 Hold the chassis in position against the mounting rails in the equipment rack and follow these steps:

a) Insert the bottom screw into the second hole up from the bottom of the rack-mount ear and use a hand-held screwdriver to tighten the screw to the rack rail.

Tip To make installation easier, insert one screw at the bottom of the chassis and the next screw at the top of the chassis diagonally from the first screw.

b) Insert the top screw into the second hole from the top of the rack-mount ear diagonally from the bottom screw and tighten the screw to the rack rail.

c) Insert the four screws to secure the chassis to the rack equipment.

Tip As a result of using the specified rack-mount bracket ear holes, the cable-management bracket can be easily attached to the rack-mount bracket when the chassis is in the rack.

Step 8 Tighten all screws on each side to secure the chassis to the equipment rack.

Two-Post Rack Installation

The Cisco ASR 1002 Router can be installed on a two-post rack, either 19 inch or 23 inch.

Note Inner clearance (the width between the inner sides of the two posts or rails) must be at least 19 inches (48.26 cm). The height of the chassis is 3.47 inches (8.8 cm). Airflow through the chassis is from front to back.

Caution If you are using a two-post rack secure the rack to the floor surface to prevent tipping and avoid bodily injury and component damage.

SUMMARY STEPS

1. Position the chassis so the front is closest to you and lift it carefully into the rack. To prevent injury, avoid any sudden twists or moves.
2. Slide the chassis into the rack, pushing it back until the brackets meet the mounting strips or posts on both sides of the rack.
3. Keeping the brackets flush against the posts or mounting strips, align the holes in the brackets with the holes on the rack or mounting strip.
4. For each bracket, insert and tighten two screws to the rack on both sides.

DETAILED STEPS

Step 1 Position the chassis so the front is closest to you and lift it carefully into the rack. To prevent injury, avoid any sudden twists or moves.

The following image shows where to attach the rear rack-mount brackets to the Cisco ASR 1002 Router.

Figure 87: Attaching the Rear Rack-Mount Brackets to the Cisco ASR 1002 Router

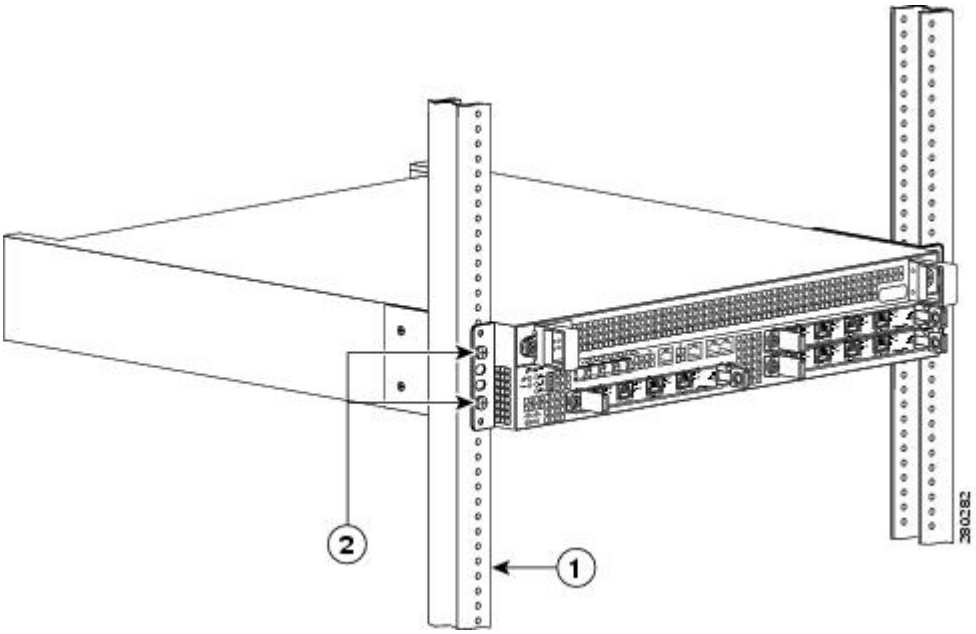

1	Rack equipment rail	2	Rack-mount bracket ear and holes

Step 2 Slide the chassis into the rack, pushing it back until the brackets meet the mounting strips or posts on both sides of the rack.

Step 3 Keeping the brackets flush against the posts or mounting strips, align the holes in the brackets with the holes on the rack or mounting strip.

Step 4 For each bracket, insert and tighten two screws to the rack on both sides.

This completes the procedure for installing the chassis on a two-post rack. Proceed to the Attaching a Chassis Ground Connection, on page 213 to continue the installation.

Four-Post Rack Installation

The Cisco ASR 1002 Router can be flush-mounted in a 19-inch equipment rack using the rack-mounting kit provided with your system. The Cisco ASR 1002 Router can be mounted into the rack using two recommended methods:

- Installing the chassis in an existing rack with equipment.
- Installing an empty chassis in a rack with no equipment installed.

When handling the chassis, always follow proper lifting practices. See the Chassis-Lifting Guidelines" section on page 5-23 .

Note Inner clearance (the width between the inner sides of the two posts or rails) must be at least 19 inches (48.26 cm). The height of the chassis is 3.47 inches (8.8 cm). Airflow through the chassis is from front to back.

Note Make sure the rack is stabilized.

SUMMARY STEPS

1. (Optional) Install a shelf in the rack to support the Cisco ASR 1002 Router. If you are using a shelf then raise the chassis to the level of the shelf. Let the bottom of the chassis rest on the brackets, but continue to support the chassis. Using two people, lift the chassis into the rack using the side handles and grasping underneath the power supply bays.
2. Position the chassis until the rack-mounting flanges are flush against the mounting rails on the rack.
3. Hold the chassis in position against the mounting rails while the second person finger-tightens a screw to the rack rails on each side of the chassis.
4. Finger-tighten screws to the rack rails on each side of the chassis.
5. Tighten all screws on each side to secure the chassis to the equipment rack (see the following image).
6. Use a level to verify that the tops of the two brackets are level, or use a measuring tape to verify that both brackets are the same distance from the top of the rack rails.

DETAILED STEPS

Step 1 (Optional) Install a shelf in the rack to support the Cisco ASR 1002 Router. If you are using a shelf then raise the chassis to the level of the shelf. Let the bottom of the chassis rest on the brackets, but continue to support the chassis. Using two people, lift the chassis into the rack using the side handles and grasping underneath the power supply bays.

Step 2 Position the chassis until the rack-mounting flanges are flush against the mounting rails on the rack.

Note Use the second hole up from the bottom of the rack-mount bracket and the second hole down from the top of the rack-mount bracket. This will make it easier to attach the cable-management bracket to the chassis in the equipment rack.

Step 3 Hold the chassis in position against the mounting rails while the second person finger-tightens a screw to the rack rails on each side of the chassis.

Step 4 Finger-tighten screws to the rack rails on each side of the chassis.

Step 5 Tighten all screws on each side to secure the chassis to the equipment rack (see the following image).

Figure 88: Cisco ASR 1002 Router on a Four-Post Rack—Front and Rear Rack-Mounting

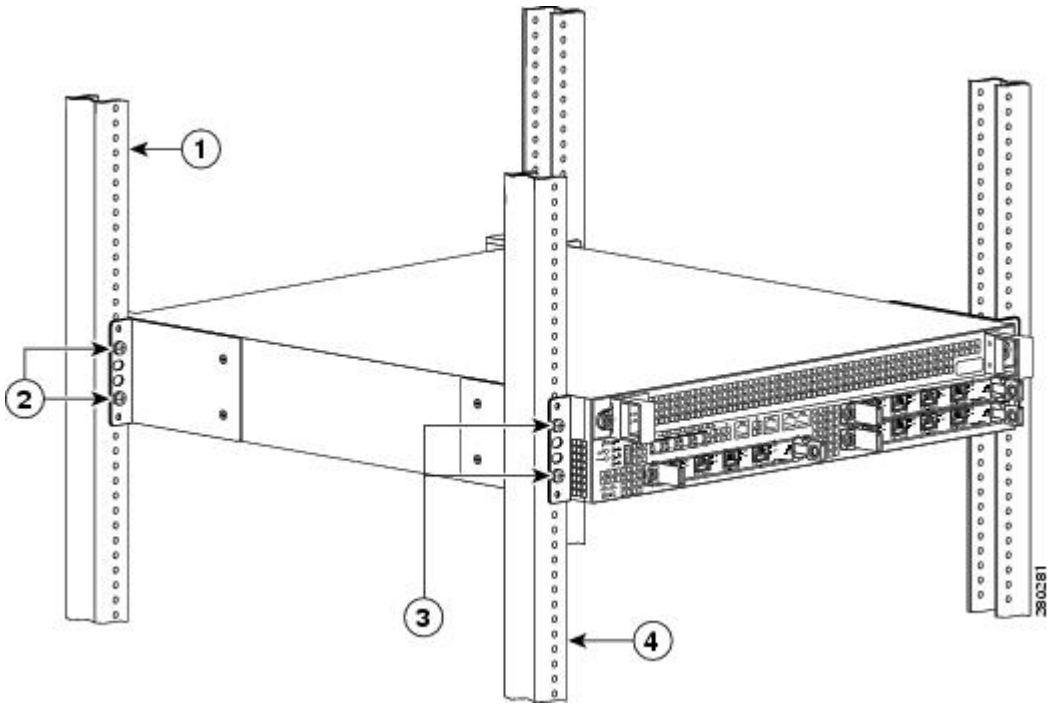

1	Rear rack equipment rail	3	Front rack-mount bracket ear and holes
2	Rear rack-mount bracket ear and holes	4	Front rack equipment rail

Step 6 Use a level to verify that the tops of the two brackets are level, or use a measuring tape to verify that both brackets are the same distance from the top of the rack rails.

What to do next

This completes the procedure for installing the chassis in the rack. Proceed to the Attaching the Cable-Management Bracket, on page 211 to continue the installation.

Attaching the Cable-Management Bracket

The cable-management brackets mount to each rack-mount bracket on the chassis to provide cable-management to both sides of the chassis (parallel with card orientation). These brackets are screw mounted to the rack-mount brackets to allow easy installation and removal of cables.

The cable-management brackets for the Cisco ASR 1002 Router contain one independent cable-management "U" type features with four screws and provides cable dressing of each card module slot.

Note Make certain that the cable-management bracket "U" type feature is facing upwards when you attach it to the chassis.

Follow these steps to attach the cable-management brackets to both sides of the Cisco ASR 1002 Router in the rack:

SUMMARY STEPS

1. Align the cable-management bracket to the rack-mount bracket on one side of the Cisco ASR 1002 Router. The cable-management bracket aligns to the top hole of the chassis rack-mount bracket.
2. Using a Phillips screwdriver, insert the screw through cable-management bracket and into the chassis rack-mount and tighten the screw.
3. Using the bottom rack-mount ear hole, insert the screw through cable-management bracket and into the chassis rack-mount (see Attaching the Cable-Management Bracket, on page 211).

DETAILED STEPS

Step 1 Align the cable-management bracket to the rack-mount bracket on one side of the Cisco ASR 1002 Router. The cable-management bracket aligns to the top hole of the chassis rack-mount bracket.

Step 2 Using a Phillips screwdriver, insert the screw through cable-management bracket and into the chassis rack-mount and tighten the screw.

Note Use the package of four screws.

The following image shows the locations at which to attach the front rack-mount brackets to the Cisco ASR 1002 Router in a rack.

Figure 89: Chassis Rack-Mount Bracket Ear Holes for the Cable-Management Brackets

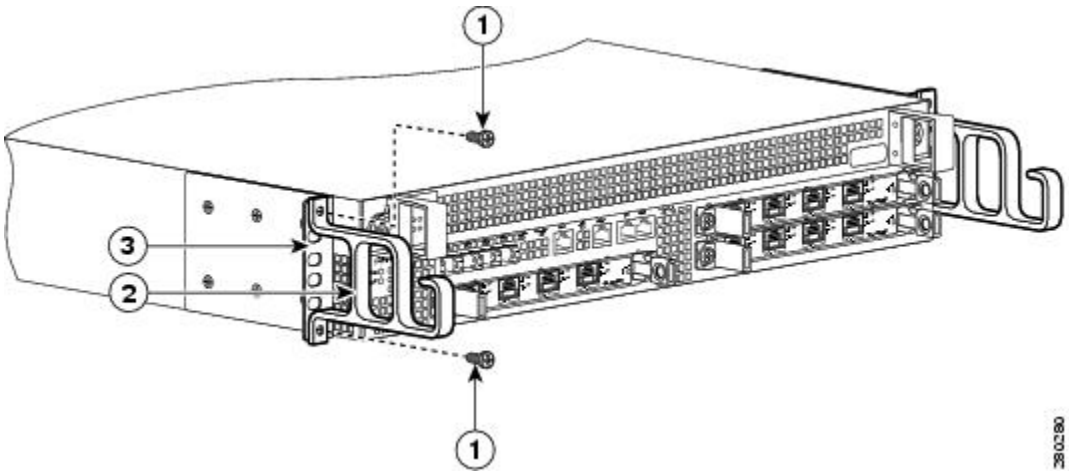

1	Secure the cable-management top screw and bottom to this ear hole	3	Front rack-mount bracket
2	Cable-management bracket		

Step 3 Using the bottom rack-mount ear hole, insert the screw through cable-management bracket and into the chassis rack-mount (see Attaching the Cable-Management Bracket, on page 211).

What to do next

This completes the procedure for installing the cable-management brackets on the chassis.

Attaching a Chassis Ground Connection

Connecting the Cisco ASR 1002 chassis to ground is required for all DC powered installations and any AC powered installation where compliance with Telcordia grounding requirements is necessary.

Caution The dual-lug chassis ground stud must be installed, all cards or filler plates must be fully inserted and screwed in and earthed to prevent a potential hazard in a telecom line.

Have the recommended tools and supplies available before you begin this procedure.

Warning This equipment must be grounded. Never defeat the ground conductor or operate the equipment in the absence of a suitably installed ground conductor. Contact the appropriate electrical inspection authority or an electrician if you are uncertain that suitable grounding is available. Statement 1024

Before you connect power or turn on power to your chassis, you must provide an adequate chassis ground (earth) connection for the chassis. The chassis ground lug (two) and the respective screws (four) are provided in the accessory kit that ships with your Cisco ASR 1002 Router.

Caution The grounding wire is always the first to be installed or connected and the last to be removed or disconnected.

The following tools, equipment, and supplies necessary to connect the system ground to the chassis:

- Phillips screwdriver
- Dual-lug chassis ground component (two) and respective screws (four) (shipped with the accessory kit)
- Grounding wire

The follwing image shows the location of the dual ground lug on the side of the of Cisco ASR 1002 Router.

Figure 90: Cisco ASR 1002 Router Chassis Ground Lug Location and Side Panel Door

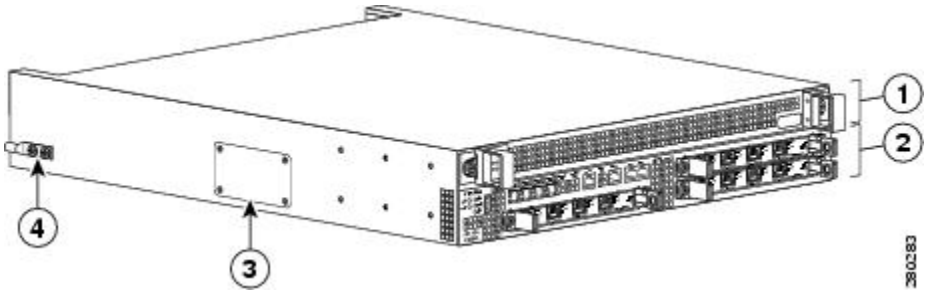

1	F0 with ASR1000-ESP5 or ESP10.	3	The eUSB panel door on the side of the Cisco ASR 1002 Router must not be opened. If there is a problem with eUSB flash card, the chassis should be returned.
2	R0 slot with embedded ASR1000-RP1 and embedded ASR1000-SIP10.	4	Cisco ASR 1002 Router ground stud location.

To attach the grounding lug to the chassis ground connector on your chassis, follow these steps:

SUMMARY STEPS

1. Use the wire stripper to strip one end of the AWG #6 wire approximately 0.75 inches (19.05 mm).
2. Insert the AWG #6 wire into the wire receptacle on the grounding lug. Use the manufacturers's recommended crimping tool to carefully crimp the wire receptacle around the wire; this step is required to ensure a proper mechanical connection.
3. Attach the grounding lug with the wire on the left to avoid having the grounding wire overlapping the power supply.
4. Locate the chassis ground connector on the side of your chassis.
5. The following image shows how to attach the grounding lug to the chassis ground connector.
6. Insert the two screws through the holes in the grounding lug.
7. Use the Number 2 Phillips screwdriver to carefully tighten the screws until the grounding lug is held firmly to the chassis. Do not overtighten the screws.
8. Connect the opposite end of the grounding wire to the appropriate grounding point at your site to ensure an adequate chassis ground.

DETAILED STEPS

Step 1 Use the wire stripper to strip one end of the AWG #6 wire approximately 0.75 inches (19.05 mm).

Step 2 Insert the AWG #6 wire into the wire receptacle on the grounding lug. Use the manufacturers's recommended crimping tool to carefully crimp the wire receptacle around the wire; this step is required to ensure a proper mechanical connection.

The following image shows the parts of the grounding lug.

Figure 91: Parts of the Grounding Lug

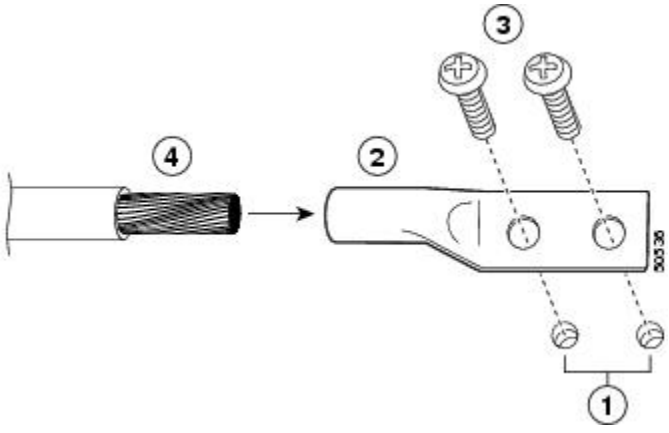

1	Chassis ground connector holes	3	Ground lug screws

2	Grounding lug	4	Ground wire

Step 3 Attach the grounding lug with the wire on the left to avoid having the grounding wire overlapping the power supply.

Step 4 Locate the chassis ground connector on the side of your chassis.

Step 5 The following image shows how to attach the grounding lug to the chassis ground connector.

Figure 92: Attaching a Grounding Lug to the Chassis Ground Connector

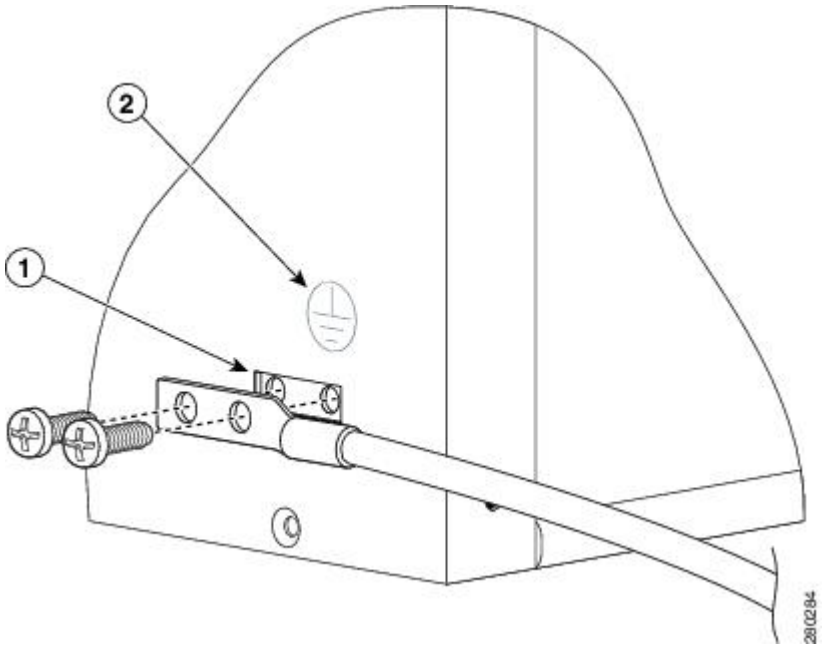

1	Chassis ground connector	2	Ground symbol

Step 6 Insert the two screws through the holes in the grounding lug.

Step 7 Use the Number 2 Phillips screwdriver to carefully tighten the screws until the grounding lug is held firmly to the chassis. Do not overtighten the screws.

Step 8 Connect the opposite end of the grounding wire to the appropriate grounding point at your site to ensure an adequate chassis ground.

What to do next

This completes the procedure for attaching a chassis ground connection. Go to the following cabling sections for information on attaching cables.

Connecting the Shared Port Adapter Cables

The instructions for connecting the cables for the shared port adapter installed in the Cisco ASR 1002 Router are contained in the respective configuration documents for each port adapter. For example, if you are

connecting the optical fiber cables for the PA-POS-OC3 port adapter, see PA-POS-OC3 Port Adapter Installation and Configuration at the following location:

http://www.cisco.com/en/US/partner/docs/interfaces_modules/port_adapters/install_upgrade/pos/pa-pos-oc3_install_config/paposoc3.html

Connecting the Console and Auxiliary Port Cables

This section describes how to attach a cable to the Cisco embedded ASR1000-RP1 console or auxiliary ports on the Cisco ASR 1002 Router. The Cisco ASR 1002 Router uses RJ-45 ports for both the auxiliary port and console port.

Caution To meet Class A emission requirements, shielded cables must be used for the console and auxiliary port connectors.

Before you can use the console interface on the router using a terminal or PC, you must perform the following steps:

SUMMARY STEPS

1. Before connecting a terminal to the console port, configure the terminal to match the chassis console port as follows: 9600 baud, 8 data bits, no parity, 1 stop bits (9600 8N1).
2. Connect to the port using the RJ-45 to DB-9 cable.
3. After you establish normal router operation, you can disconnect the terminal.

DETAILED STEPS

Step 1 Before connecting a terminal to the console port, configure the terminal to match the chassis console port as follows: 9600 baud, 8 data bits, no parity, 1 stop bits (9600 8N1).

Step 2 Connect to the port using the RJ-45 to DB-9 cable.

Note For information about how to change the default settings to meet the requirements of your terminal or host, see Cisco IOS Terminal Services Configuration Guide .

The follwing shows the Cisco ASR 1002 Router embedded ASR1000-RP1 console and auxiliary port connectors.

Figure 93: Cisco ASR 1002 Router Embedded ASR1000-RP1 Console and Auxiliary Port Connectors

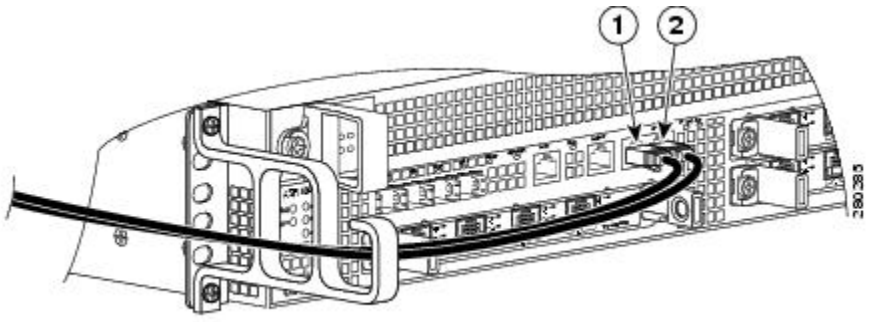

1	CON—console port	2	AUX —auxiliary port

Step 3 After you establish normal router operation, you can disconnect the terminal.

What to do next

Note A connection will not be established when setting up an out-of-band connection or modem connection in the auxiliary port and the console port.

Management Ethernet Port Cable Connection

Caution To comply with Class A emissions requirements, a shielded Ethernet cable must be used for the connection.

To use the Management Ethernet interface on the router, perform the following steps:

SUMMARY STEPS

1. Insert an Ethernet RJ-45 cable into the MGMT ETHERNET port (see the following image.).
2. Insert the other end of the RJ-45 cable to your management device or network.

DETAILED STEPS

Step 1 Insert an Ethernet RJ-45 cable into the MGMT ETHERNET port (see the following image.).

Figure 94: Cisco ASR 1002 Router Embedded ASR1000-RP1 Management Port Connector

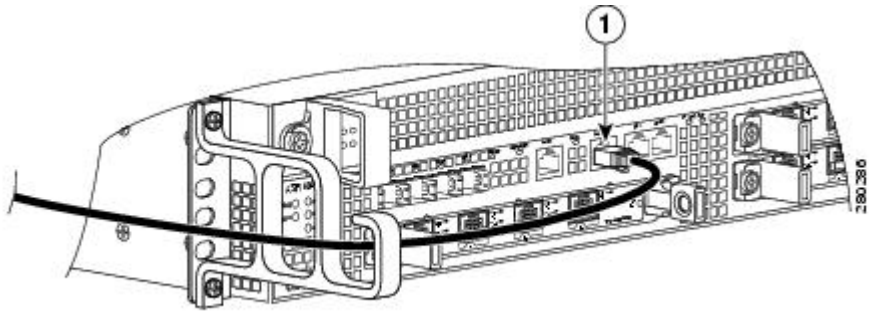

1	MGMT - management port and cable

Step 2 Insert the other end of the RJ-45 cable to your management device or network.

Cisco ASR 1002 Router Power Supplies

This section describes the Cisco ASR 1002 Router power supplies and how to connect them:

Read the safety warnings before you begin.



Warning The covers are an integral part of the safety design of the product. Do not operate the unit without the covers installed. Statement 1077



Warning When you install the unit, the ground connection must always be made first and disconnected last. Statement 1046



Warning Before performing any of the following procedures, ensure that power is removed from the DC circuit. Statement 1003



Warning Only trained and qualified personnel should be allowed to install, replace, or service this equipment. Statement 1030



Warning Never install an AC power module and a DC power module in the same chassis. Statement 1050



Warning Installation of the equipment must comply with local and national electrical codes. Statement 1074



Warning When installing or replacing the unit, the ground connection must always be made first and disconnected last. Statement 1046



Warning This equipment must be grounded. Never defeat the ground conductor or operate the equipment in the absence of a suitably installed ground conductor. Contact the appropriate electrical inspection authority or an electrician if you are uncertain that suitable grounding is available. Statement 1024



Warning This unit has two power supply connections. All connections must be removed to de-energize the unit. Statement 1028

Warning This product relies on the building's installation for short-circuit (overcurrent) protection. Ensure that the protective device is rated not greater than: AC power supplies 20 A and DC power supplies 30 A. Statement 1005

This section provides the procedures for connecting AC-input, –48 VDC input power, and the +24 VDC input power to your Cisco ASR 1002 Router.

Note Detailed instructions for removing and replacing the Cisco ASR 1002 Router AC and DC power supplies are in Chapter 14, "Removing and Replacing FRUs from the Cisco ASR 1000 Series Routers."

Connecting AC Input Power to Cisco ASR 1002 Router

To connect AC power to the Cisco ASR 1002 Router, follow these steps:

SUMMARY STEPS

1. At the rear of the router, check that the power switch is in the Off (O) position.
2. Insert the AC power cable into the power supply AC inlet.
3. To ensure that the AC power cord does not interfere with other cables or wires, dress the AC power cable in one of the following ways.
4. Plug the AC power supply cable into the AC power source.

DETAILED STEPS

Step 1 At the rear of the router, check that the power switch is in the Off (O) position.

Note Turn the power switch to the On (|) position after both sides of the power cord are connected.

The following shows the various parts of the Cisco ASR 1002 Router AC power supply.

Figure 95: Cisco ASR 1002 Router AC Power Supply Labels

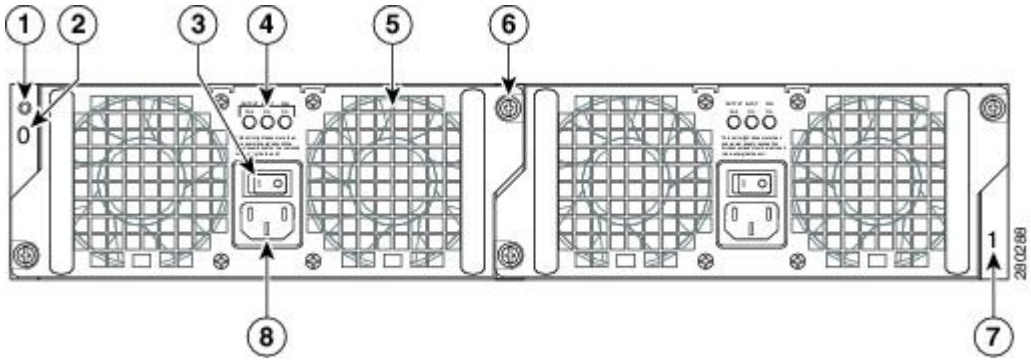

1	Chassis ESD socket	5	AC power supply fan
2	AC power supply slot number 0	6	AC power supply captive installation screw

3	AC power supply On (|) /Off (O) switch	7	AC power supply slot number 1
4	AC power supply LEDs	8	AC power inlet

Step 2 Insert the AC power cable into the power supply AC inlet.

Step 3 To ensure that the AC power cord does not interfere with other cables or wires, dress the AC power cable in one of the following ways.

a) Leave a small service loop in the AC power cord from the inlet and then secure the power cord through the AC power supply handle as shown in the Connecting AC Input Power to Cisco ASR 1002 router image. Alternatively, proceed to Step b.

Figure 96: Positioning Cisco ASR 1002 Router AC Power Supply and Cord in Slot 1

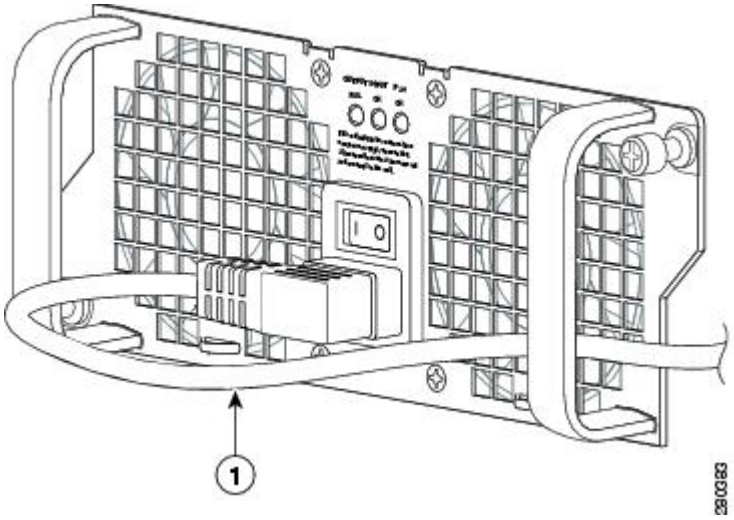

1	AC power cord

b) Take the power cord and run it below the handles of the right and left power supplies. Make sure the power cord is hanging loose so that it will not be disconnected from the AC power inlet as shown in the following image.

Figure 97: Cisco ASR 1002 Router AC Power Supply in Slot 0 and Slot 1 With Power Cord

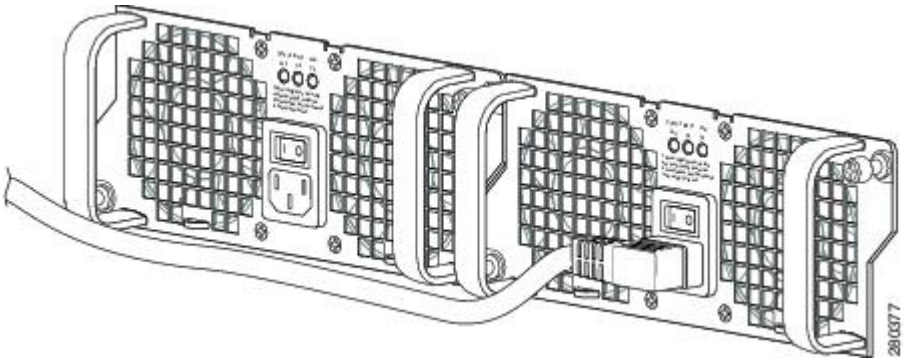

Caution Do not run the AC power cord through the power supply handles as shown in Connecting AC Input Power to Cisco ASR 1002 router image.

Figure 98: Incorrect Cabling on Cisco ASR 1002 Router AC Power Supply

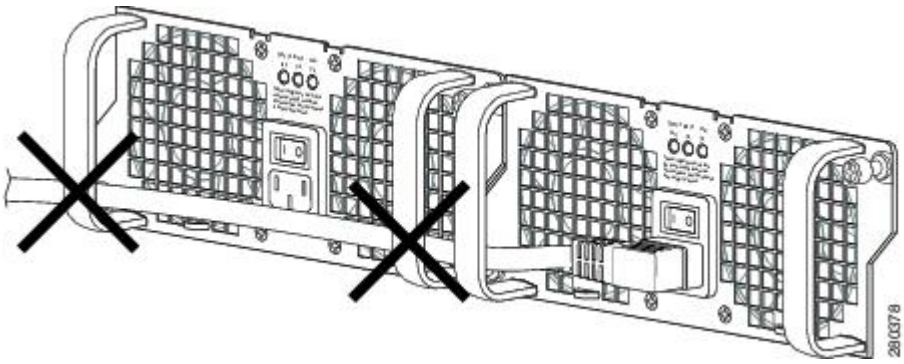

Note Using a tie wrap for the AC power cable is optional and not necessary. However, if you do attach the AC power cable to a power supply tab and then you remove the AC power cable for some reason, check for any damage to the cable after you cut the tie wrap off. If the power cord is damaged, replace it immediately.

Step 4 Plug the AC power supply cable into the AC power source.

What to do next

This completes the procedure for connecting an AC power supply in the Cisco ASR 1002 Router.

Connecting 48 VDC Input Power to Cisco ASR 1002 Router

The –48 VDC power supply input connector is a Euro-style terminal block. A means to provide strain relief to the input wires is provided on the power supply. The connection order is negative (–), positive (+), and GND; but this is the order from left to right that the terminals appear on the power supply, not the order in which the leads should connected during installation. The order the leads should be attached is GND, positive (+), and negative (-).

The recommended branch circuit breaker for the Cisco ASR 1002 Router –48 VDC power supply is 30 A. Use a AWG #10 wire gauge on the 30 A circuit.

The following image shows the –48 VDC power supply for the Cisco ASR 1002 Router.

Figure 99: –48 VDC Power Supply for the Cisco ASR 1002 Router

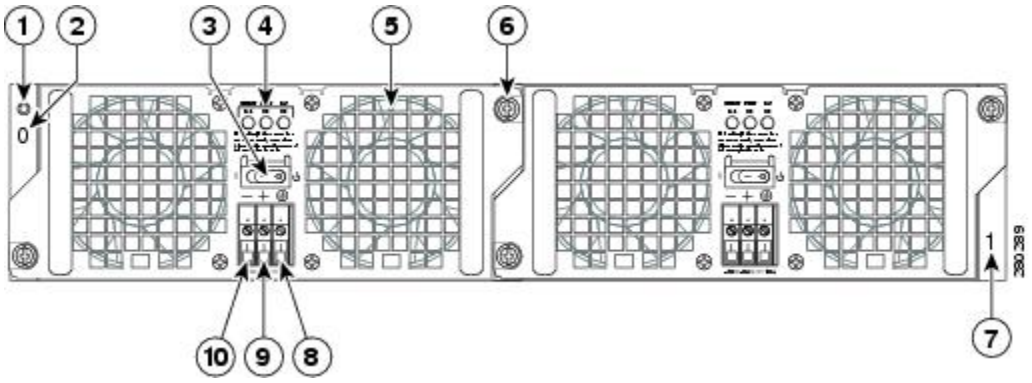

1	Chassis ESD socket	6	–48 VDC power supply captive installation screw
2	–48 VDC power supply slot 0 label	7	–48 VDC power supply slot 1 label
3	–48 VDC power supply switch Standby/On	8	Ground lead
4	–48 VDC power supply LEDs	9	Positive lead
5	Fan	10	Negative lead

Table 63: Cisco ASR 1002 Router –48 VDC Power Supply LEDs , on page 222 describes the LEDs on the Cisco ASR 1002 Router –48 VDC power supply.

Table 63: Cisco ASR 1002 Router –48 VDC Power Supply LEDs

LED Label	LED	Color	Description
INPUT OK	A bi-color LED indicates presence of input voltage	Green	LED illuminates green to signal that the –48 VDC power supply input voltage is greater than 43.5VDC at turn-on and remains green down to 39VDC.
		Amber	The LED illuminates amber if the power supply turns off due to low input voltage (falls below 39VDC) and indicates that there is still a hazard present (voltage on the terminal block). The LED remains amber and is active to around 20 V +/-5 V. The LED is not illuminated if the input is below 15 V.
FAN OK	A bi-color LED indicates power supply fan status	Green	The LED illuminates s green when all fans are operational.
		Red	The LED illuminates red when a fan failure is detected.
OUTPUT FAIL	Power supply activity	Red	When the LED is off, it signals that the –48 VDC output voltage are within the normal operating range. Output voltage between the minimum and maximum limits will not create an output fail alarm, and output voltages below the minimum or above the maximum will create an Output Fail alarm. Led illuminates red to indicate that the –48 VDC output is out of the specified range. When you turn the power supply on, the red LED illuminates for two to three seconds to test LED operation before going off.

This section describes how to connect the –48 VDC power supply in the Cisco ASR 1002 Router.

Note The color coding of the –48 VDC input power supply leads depends on the color coding of the –48 VDC power source at your site. Typically, green or green/yellow is used for ground. Make certain the lead color coding you choose for the –48 VDC input power supply matches lead color coding used at the –48 VDC power source.

Warning When you install the unit, the ground connection must always be made first and disconnected last. Statement 1046

SUMMARY STEPS

1. At the rear of the router, check that the power supply Standby switch is in the Standby (see Figure 100: Cisco ASR 1002 Router –48 VDC Power Supply Terminal Block Cable Connections, on page 223) position.
2. Ensure that the negative and positive leads are disconnected from the site power source.
3. Using a wire stripper, strip approximately 0.55 inch (14 mm) from the negative, positive, and ground lead.
4. Insert the stripped end of the ground lead all the way into the ground lead receptacle on the –48 VDC input power supply, and tighten the receptacle screw using a 3.5mm flat-blade screwdriver to a torque of 0.5 to 0.6Nm.
5. Insert the stripped end of the positive lead all the way into the positive lead receptacle and tighten the receptacle screw using the same 3.5mm flat-blade screwdriver. Repeat this step for the negative lead.
6. After tightening the receptacle screw for the ground, positive, and negative –48 VDC-input leads, use a cable tie to secure the three leads to the power supply faceplate, as shown in the image. When securing the ground, positive, and negative –48 VDC-input leads to the power supply faceplate, leave a small service loop in the ground lead to ensure that the ground lead is the last lead to disconnect from the power supply if a great deal of strain is placed on all three leads as shown in the image.
7. Connect the ground, positive, and negative leads to the power source.
8. Turn the branch source breaker on.
9. Place the –48 VDC Standby switch in the On (|) position. The power supply LEDs light when power is supplied to the router.

DETAILED STEPS

Step 1 At the rear of the router, check that the power supply Standby switch is in the Standby (see Figure 100: Cisco ASR 1002 Router –48 VDC Power Supply Terminal Block Cable Connections, on page 223) position.

Figure 100: Cisco ASR 1002 Router –48 VDC Power Supply Terminal Block Cable Connections

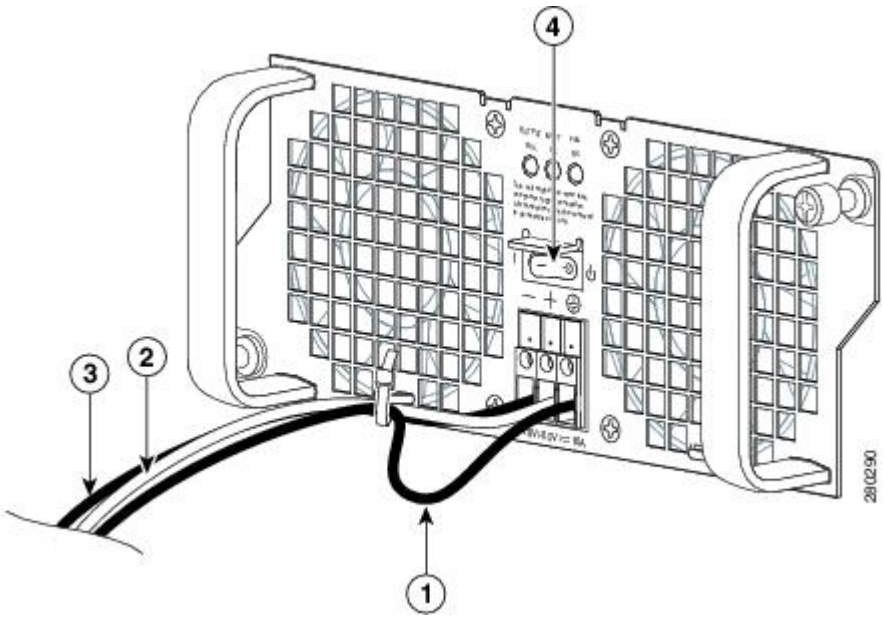

1	Ground lead with service loop and tie-wrap	3	Negative lead

2	Positive lead	4	–48 VDC power supply Standby switch

Step 2 Ensure that the negative and positive leads are disconnected from the site power source.

Step 3 Using a wire stripper, strip approximately 0.55 inch (14 mm) from the negative, positive, and ground lead.

Step 4 Insert the stripped end of the ground lead all the way into the ground lead receptacle on the –48 VDC input power supply, and tighten the receptacle screw using a 3.5mm flat-blade screwdriver to a torque of 0.5 to 0.6Nm.

Step 5 Insert the stripped end of the positive lead all the way into the positive lead receptacle and tighten the receptacle screw using the same 3.5mm flat-blade screwdriver. Repeat this step for the negative lead.

Note Make sure the entire stripped end of each lead is inserted all the way into its receptacle. If any exposed wire at the stripped end of a lead is visible after inserting the lead into its receptacle, remove the lead from the receptacle, use the wire stripper to cut the stripped end of the lead, and repeat Step 3 through Step 5.

Step 6 After tightening the receptacle screw for the ground, positive, and negative –48 VDC-input leads, use a cable tie to secure the three leads to the power supply faceplate, as shown in the image. When securing the ground, positive, and negative –48 VDC-input leads to the power supply faceplate, leave a small service loop in the ground lead to ensure that the ground lead is the last lead to disconnect from the power supply if a great deal of strain is placed on all three leads as shown in the image.

Caution Make certain that the ground lead wire has a service loop before you tie wrap the lead wires to prevent the ground from being disconnected.

Step 7 Connect the ground, positive, and negative leads to the power source.

Step 8 Turn the branch source breaker on.

Step 9 Place the –48 VDC Standby switch in the On (|) position. The power supply LEDs light when power is supplied to the router.

What to do next

You have completed the procedure for connecting a –48 VDC power supply in the Cisco ASR 1002 Router.

Connecting Cisco 24 VDC Power Supply

The +24 VDC power supply uses a spring-loaded terminal block. The input terminal block requires 8 AWG multi-strand wiring to support input current. Features are provide for strain relieving the input wires from the terminal block on the front panel. The recommended branch circuit breaker for the Cisco ASR 1002 Router +24 VDC power supply is a 40 A UL listed circuit breaker.

Before you begin, read these important notices about the +24 VDC power supply:

- The labeling displays +27 VDC INPUT. This labeling describes the nominal voltage provided at a cell site.
- Observe the polarity location—Unlike the polarity labels of the –48 VDC power supply (ground, positive, negative), the polarity labels on the +24 VDC are ground, negative, positive as shown from right to left as they appear on the actual power supply unit.
- The ground (GND) lead is always installed first and removed last.
- The +24 VDC power supply uses a spring loaded terminal block; therefore have the recommended screwdriver size available.

- Review the diagrams to see how the wire is stripped and how the screwdriver is inserted at an angle into the terminal block.
- Have the following equipment available to install and remove the +24 VDC power supply:
  - Phoenix Contact 3.5mm flat-blade screwdriver or equivalent
  - Wire-stripping tool for stripping 8-gauge wire

The following image shows the +24 VDC power supply for the Cisco ASR 1002 Router.

Figure 101: +24 VDC Power Supply for the Cisco ASR 1002 Router Components

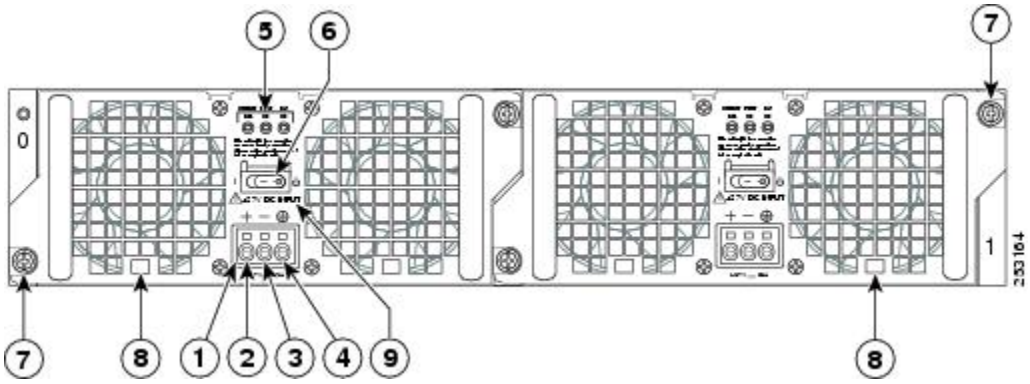

1	+24 VDC terminal block	6	Standby/On switch
2	Positive (+) lead	7	Captive fastener
3	Negative (-) lead	8	Power supply tabs
4	Ground (GND) lead	9	+27 VDC INPUT label
5	Power supply LEDs	—	—

This section describes how to connect the +24 VDC power supply in the Cisco ASR 1002 Router.

Note The color coding of the +24 VDC input power supply leads depends on the color coding of the +24 VDC power source at your site. Typically, green or green/yellow is used for ground. Make certain the lead color coding you choose for the +24 VDC input power supply matches lead color coding used at the +24 VDC power source. Most commonly used wire color-coding is red for positive (+) lead and black for negative (–) lead.

Warning When you install the unit, the ground connection must always be made first and disconnected last. Statement 1046

To connect +24 VDC power supply in the Cisco ASR 1002 Router, follow these steps:

SUMMARY STEPS

1. At the rear of the router, check that the power Standby switch is in the Standby position.
2. Ensure that the positive and negative leads are disconnected from the site power source and the source circuit breaker is turned off.
3. Using a wire stripper, strip the recommended amount of wire insulation which is 15mm (0.6 inch) from the negative, positive, and ground leads.
4. Using a 3.5mm screwdriver, insert the screwdriver at an angle to release the spring while you install the stripped lead wire as shown in the image.
5. Carefully push the screwdriver at an angle forward until you relieve the spring contact.
6. With the screwdriver still inserted, gently push the lead wire (ground lead first) in until the copper wire, as shown in the image, is no longer visible (see in the following image).
7. After the lead wire is fully inserted, hold the lead wire in place by pressing inward while you remove the screwdriver to release the spring to tension down on the installed lead wire, then perform these steps:
8. Repeat Steps 5 through Step 10 for each lead wire.
9. After inserting the ground wire, leave an extra service loop in the ground lead to ensure that the ground lead is the last lead to disconnect from the power supply if a great deal of strain is placed on all three leads as shown in the following image.
10. After tightening the receptacle screw for the ground, and leaving the extra service loop in the ground lead, use a cable tie to secure the three leads to the power supply faceplate tie-wrap tab as shown in the above imave, item 5.
11. Turn on the branch source breaker.
12. Place the power supply standby switch to the On (|) position. The power supply LEDs light when power is supplied to the router.

DETAILED STEPS

Step 1 At the rear of the router, check that the power Standby switch is in the Standby position.

Step 2 Ensure that the positive and negative leads are disconnected from the site power source and the source circuit breaker is turned off.

Step 3 Using a wire stripper, strip the recommended amount of wire insulation which is 15mm (0.6 inch) from the negative, positive, and ground leads.

Note The stripping length is common to all types of wire used.

The following image shows the wire strip and lead.

Figure 102: Stripping Wire for the +24 VDC Terminal Block

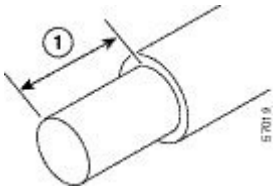

1	Lead wire stripping area	—	—

Warning Remove the covering from exactly the specified length of each wire. If you strip too much of the covering, exposed wire protruding from the terminal block will create an electrical hazard. If you strip too little of the covering, the wire might not make a good contact with the terminal, or it might not be held securely in place in the terminal.

Step 4 Using a 3.5mm screwdriver, insert the screwdriver at an angle to release the spring while you install the stripped lead wire as shown in the image.

Figure 103: Inserting a Screwdriver Into the +24 VDC Power Supply Terminal Block

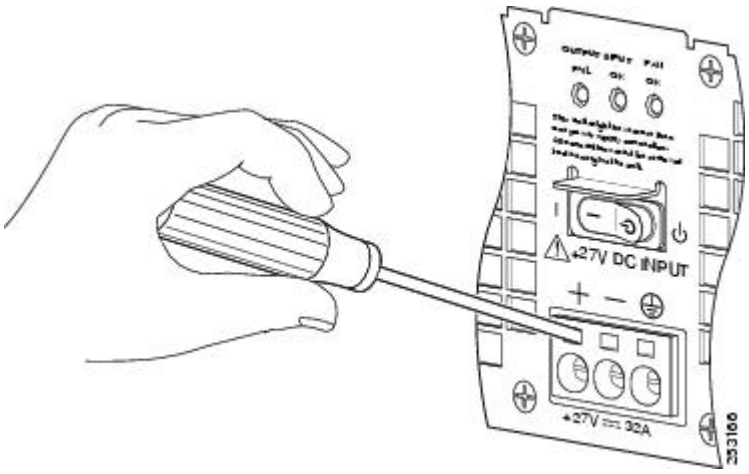

Step 5 Carefully push the screwdriver at an angle forward until you relieve the spring contact.

Step 6 With the screwdriver still inserted, gently push the lead wire (ground lead first) in until the copper wire, as shown in the image, is no longer visible (see in the following image).

Caution Check that there is no copper portion of the lead wire exposed. You only want the wire insulation visible.

Caution Do not install wire into the terminal block that has not had its insulation removed.

Figure 104: Cisco ASR 1002 Router +24 VDC Power Supply Lead Wire Inserted into Terminal Block

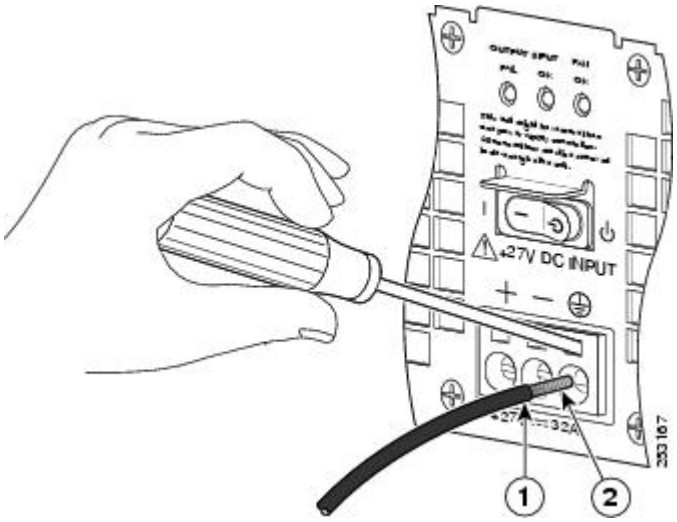

1	Lead wire insulation	2	Copper wire

The follwing image shows the lead wire fully inserted.

Figure 105: Cisco ASR 1002 Router +24 VDC Power Supply Lead Wire Fully Inserted

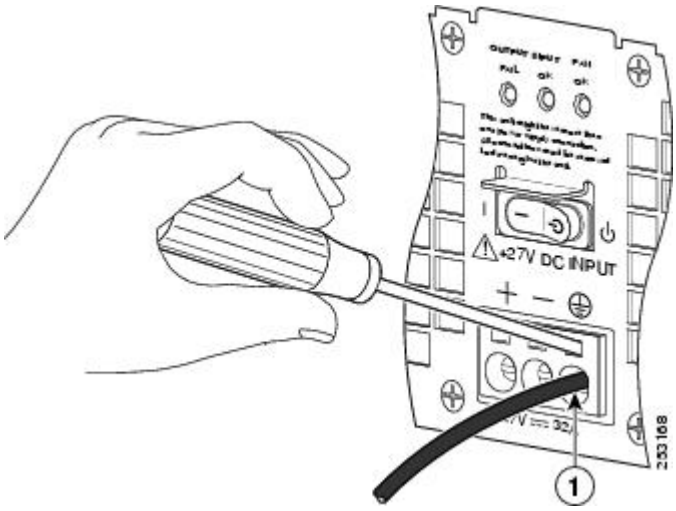

1	Fully-inserted lead wire	—	—

Step 7 After the lead wire is fully inserted, hold the lead wire in place by pressing inward while you remove the screwdriver to release the spring to tension down on the installed lead wire, then perform these steps:

a) Hold the lead wire in place while you are removing the screwdriver.

b) Once the screwdriver is completely removed, gently pull on the lead wire to make certain that the lead wire is securely installed.

The following shows a lead wire fully inserted, and the screwdriver being removed while you gently pull on the lead wire.

Figure 106: Removing a Screwdriver from the +24 VDC Power Supply Terminal Block

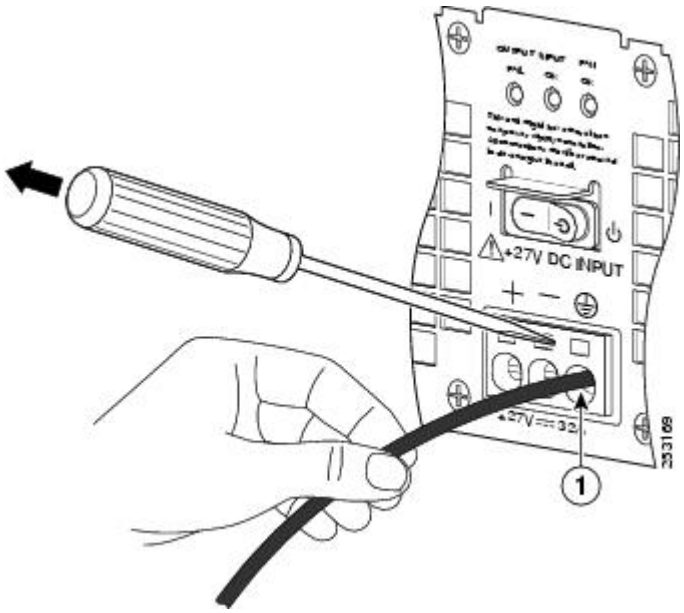

1	Gently pull on lead wire.	—	—

Step 8 Repeat Steps 5 through Step 10 for each lead wire.

The following shows all the lead wires installed.

Figure 107: Cisco +24 VDC Power Supply Terminal Block With Lead Wires Installed

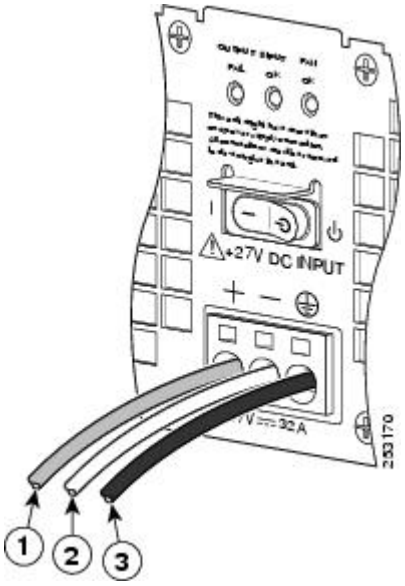

1	Positive lead wire	3	Ground lead wire
2	Negative lead wire	—	—

Note Make sure the stripped end of each lead wire is twisted tightly together. This makes insertion easier. Then make certain the entire lead wire is inserted all the way into its receptacle. If any exposed wire at the stripped end of a lead is visible after inserting the lead into its receptacle, remove the lead from the receptacle, use the wire stripper to cut the stripped end of the lead, and then reinsert.

Caution When securing the ground, positive, and negative +24 VDC-input leads to the power supply faceplate, leave extra service loop in the ground (GND) lead to ensure that the ground lead is the last lead wire to disconnect from the power supply if a great deal of strain is placed on all three leads.

Step 9 After inserting the ground wire, leave an extra service loop in the ground lead to ensure that the ground lead is the last lead to disconnect from the power supply if a great deal of strain is placed on all three leads as shown in the following image.

Figure 108: Cisco +24 VDC Power Supply Terminal Block Ground Lead Service Loop

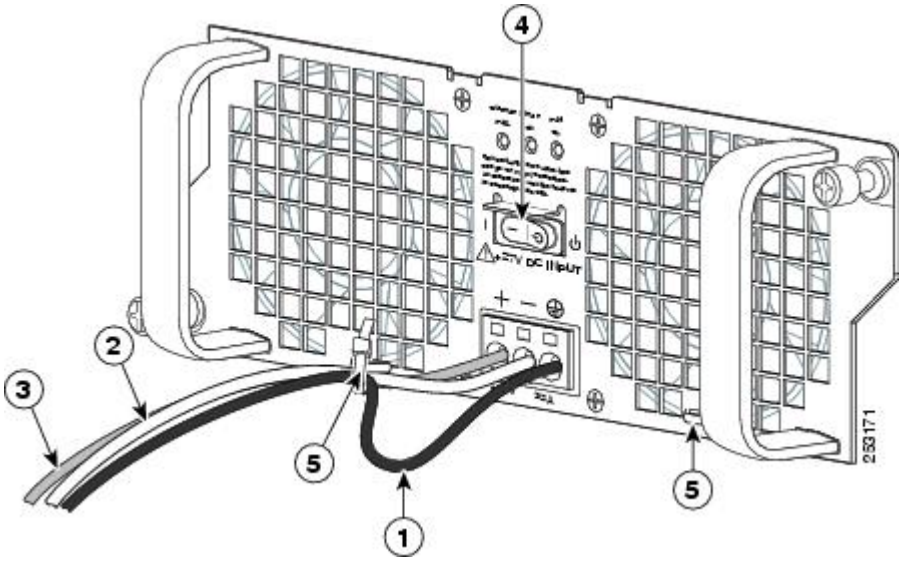

1	Ground lead wire with service loop	4	+24 VDC power supply Standby switch
2	Negative lead wire	5	Power supply tabs
3	Positive lead wire	—	—

Step 10 After tightening the receptacle screw for the ground, and leaving the extra service loop in the ground lead, use a cable tie to secure the three leads to the power supply faceplate tie-wrap tab as shown in the above imave, item 5.

Step 11 Turn on the branch source breaker.

Step 12 Place the power supply standby switch to the On (|) position. The power supply LEDs light when power is supplied to the router.

What to do next

This completes the steps for installing the +24 VDC power supply in the Cisco ASR 1002 Router.

Connecting a Terminal to the Cisco ASR1000-RP1 Console Port

The Cisco ASR 1002 embedded route processor has an asynchronous serial (EIA/TIA-232) RJ-45 console port labeled CON on its front panel. You can connect this port to most types of video terminals through use of the console cable kit that is included with your Cisco ASR 1002 Router. The console cable kit contains:

- One RJ-45 to RJ-45 crossover cable
- One RJ-45 to DB-9 (female) adapter

A crossover cable reverses pin connections from one end to the other. In other words, it connects pin 1 (at one end) to pin 8 (at the other end), pin 2 to pin 7, pin 3 to pin 6, and so on. You can identify a crossover cable by comparing the two modular ends of the cable. Hold the cable ends in your hand, side-by-side, with the tabs at the back. Ensure that the wire connected to the outside (left) pin of the left plug (pin 1) is the same color as the wire connected to the outside (right) pin of the right plug (pin 8).

Use the following procedure to connect a video terminal to the console port on a route processor.



Note Each Cisco ASR 1000 Series Route Processor 1 must have a console port connection (typically to a terminal server) if you are running a redundant configuration in the chassis.

SUMMARY STEPS

1. Connect one end of the RJ-45 cables to the serial RJ-45 port (CON) on the Cisco embedded ASR1000-RP1 (see the folliwng image).
2. Run the cable up and through the cable-management bracket and connect the other end of the RJ-45 cable to the RJ-45 adapter (see Figure 109: Cisco ASR 1002 Router Console Port Connection on Cisco Embedded ASR1000-RP1, on page 232).
3. Connect the adapter to your video terminal to complete the cable connection.
4. Power on your video terminal.
5. Configure your video terminal to match the following default console port settings:
6. Go to the c_Connecting_Cables_1074149.xml to continue the installation.

DETAILED STEPS

Step 1 Connect one end of the RJ-45 cables to the serial RJ-45 port (CON) on the Cisco embedded ASR1000-RP1 (see the folliwng image).

Figure 109: Cisco ASR 1002 Router Console Port Connection on Cisco Embedded ASR1000-RP1

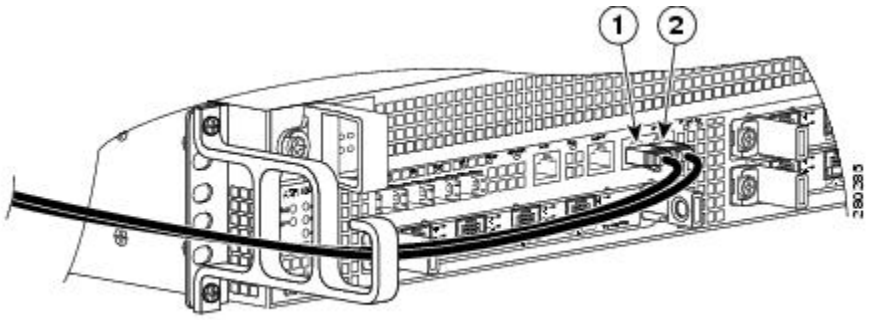

1	CON port connection	2	AUX port connection

Step 2 Run the cable up and through the cable-management bracket and connect the other end of the RJ-45 cable to the RJ-45 adapter (see Figure 109: Cisco ASR 1002 Router Console Port Connection on Cisco Embedded ASR1000-RP1, on page 232).

Step 3 Connect the adapter to your video terminal to complete the cable connection.

Step 4 Power on your video terminal.

Step 5 Configure your video terminal to match the following default console port settings:

- 9600 baud
- 8 data bits
- No parity generation or checking
- 1 stop bit
- No flow control

Step 6 Go to the c_Connecting_Cables_1074149.xml to continue the installation.

Connecting Cables

Keep the following guidelines in mind when connecting external cables to the Cisco ASR 1002 Router:

- To reduce the chance of interference, avoid crossing high-power lines with any interface cables

  .
- Verify all cabling limitations (particularly distance) before powering on the system.

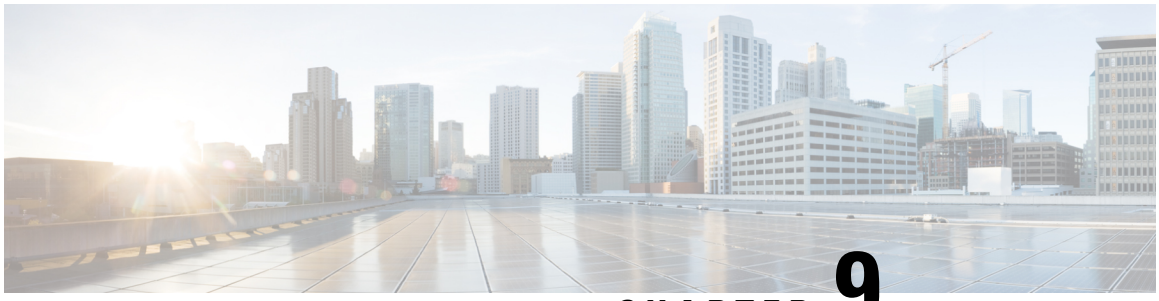

CHAPTER 9

Cisco ASR 1002-F Router Overview and Installation

This chapter describes the Cisco ASR 1002-F (Fixed) Router and provides procedures for installing the Cisco ASR 1002-F Router on an equipment shelf or tabletop or in an equipment rack, and describes how to connect interface and power cables.

This chapter contains the following sections:

- Cisco ASR 1002-F Router Description, on page 233
- Cisco ASR 1002-F Router Components, on page 236
- Installation Methods, on page 242
- General Rack Installation Guidelines, on page 243
- Guidelines for an Equipment Shelf or Tabletop Installation, on page 244
- Equipment Shelf or Tabletop Installation, on page 245
- Rack-Mounting the Cisco ASR 1002-F Router, on page 247
- Attaching the Chassis Rack-Mount Brackets, on page 248
- Installing the Cisco ASR 1002-F Router in a Rack, on page 251
- Attaching the Cable-Management Bracket, on page 255
- Attaching a Chassis Ground Connection, on page 256
- Connecting the Shared Port Adapter Cables, on page 259
- Connecting the Console and Auxiliary Port Cables, on page 259
- Connecting a Cable to the Management Ethernet Port, on page 260
- Connecting Power to the Cisco ASR 1002-F Router, on page 261
- Connecting a Terminal to the Cisco Integrated RP Console Port and Auxiliary Port, on page 268
- Connecting Cables, on page 269

Cisco ASR 1002-F Router Description

The Cisco ASR 1002-F Router is one of the Cisco ASR 1000 Series Aggregation Services Routers. The Cisco ASR 1002-F Router supports all the general-purpose routing and security features of the Cisco ASR 1002 Router, and uses the same internal control and data-plane architecture as Cisco ASR 1002 Router.

The Cisco ASR 1002-F Router supports:

- The same features and components as the Cisco ASR 1002 Router

- An integrated 4xGE SPA interface
- Fixed 2.5 GB of system bandwidth and 4 GB DRAM
- A built-in 4x1GE SPA providing four small form-factor pluggable (SFP-based) GE connections, designated as SPA bay 0

.

For information about the SFP transceiver modules that are compatible with Cisco ASR 1002 Built-in Gigabit Ethernet Ports (4x1GE), refer to the “Modular Optics Compatibility” section in Cisco ASR 1000 Series Aggregation Services Routers SIP and SPA Hardware Installation Guide .

Note Only Cisco software release four code supports the Cisco ASR 1002-F Router. Do not use earlier versions of Cisco software.

This section contains the following topics:

Front View

Figure 110: Cisco ASR 1002-F Router—Front View, on page 234 shows the front of the Cisco ASR 1002-F Router with the Cisco ASR 1002-ESP-F, Cisco ASR 1000 route processor, and a SPA-4XOC12-POS installed.

Figure 110: Cisco ASR 1002-F Router—Front View

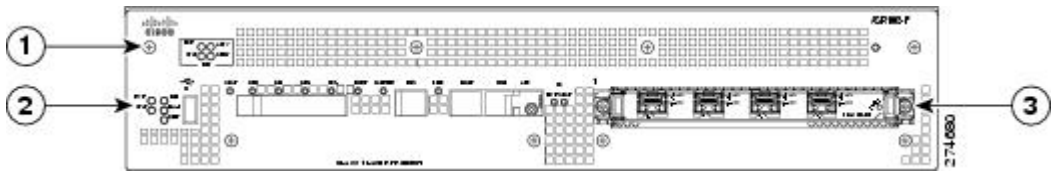

1	Integrated Cisco ASR 1002-ESP-F	3	Cisco ASR 1002-SIP10-F with a SPA installed
2	Integrated Cisco RP	—	—

Rear View

The following image shows the rear of the Cisco ASR 1002-F Router with AC power supplies installed.

Figure 111: Cisco ASR 1002-F Router With AC Power Supplies—Rear View

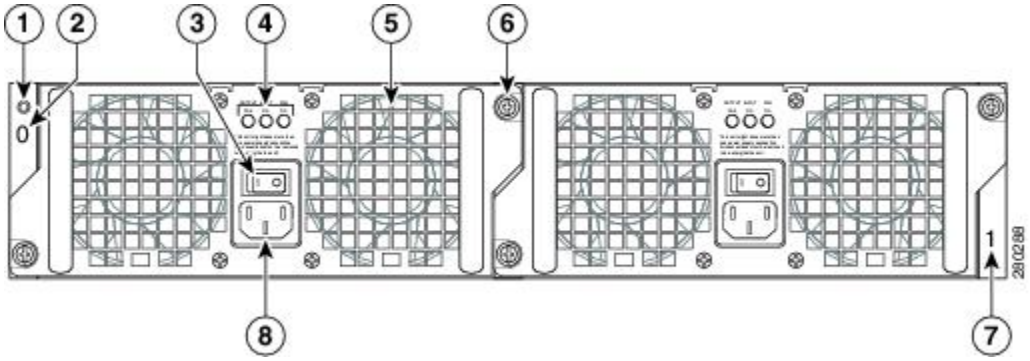

1	Chassis ESD socket	5	Fan
2	AC power supply slot 0 label	6	Captive installation screw
3	AC power supply On (|)/Off (O) switch	7	AC power supply slot 1 label
4	AC power supply LEDs	8	AC power inlet

Note On the side of the Cisco ASR 1002-F Router there is an eUSB panel door and the grounding lug as shown in the "Cisco ASR 1002-F Router Chassis Ground Lug Location and eUSB Side Panel Door" figure in the *Attaching a Chassis Ground Connection* section. This panel door must not be opened. There is a Do Not Tamper label on the panel door. Do not remove the label. If there is a problem with the eUSB flash card, then the chassis should be returned.

The follwing image shows the rear of the Cisco ASR 1002-F Router with DC power supplies installed.

Figure 112: Cisco ASR 1002-F Router With DC Power Supplies—Rear View

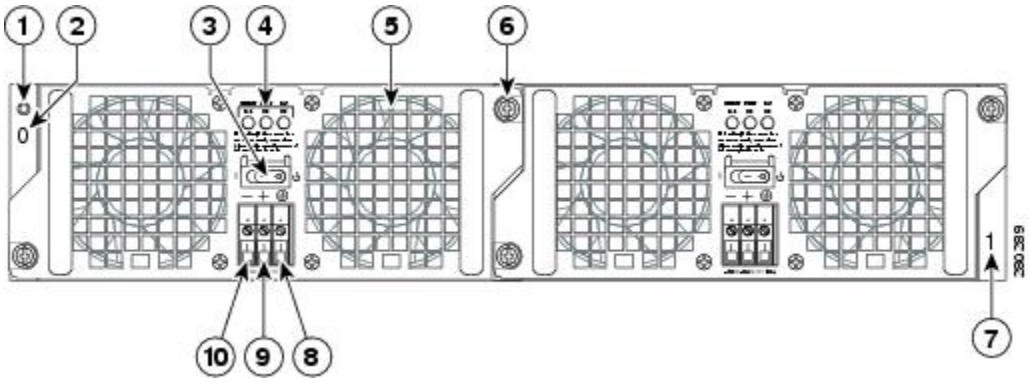

1	Chassis ESD socket	6	Captive installation screw
2	DC power supply slot 0 label	7	DC power supply slot 1 label
3	DC power supply Standby/On (|) switch	8	Ground lead

4	DC power supply LEDs	9	Positive lead
5	Fan	10	Negative lead

Internal fans draw cooling air into the chassis and across internal components to maintain an acceptable operating temperature. The fans are located at the rear of the chassis. A two-hole ground connector lug is located on the side of the chassis. Two power supplies, either two AC power supplies or two DC power supplies, are accessed from the rear of the router.

Caution Use only AC power supplies or DC power supplies in the Cisco ASR 1002-F Router. Do not mix power supply types.

Cisco ASR 1002-F Router Slot Numbering

The Cisco ASR 1002-F Router contains:

- One Cisco integrated RP— R0
- One integrated Cisco ASR1000-ESP-F forwarding processor— F0
- One integrated ASR1002-SIP10-F—slot 0
- 4-Gigabit Ethernet built-in interface—slot 0/0
- SPA-5x1GE-V2—slot 0/1

The following figure shows the slot numbering for the Cisco ASR 1002-F Router.

Figure 113: Cisco ASR 1002-F Router Slot Numbering

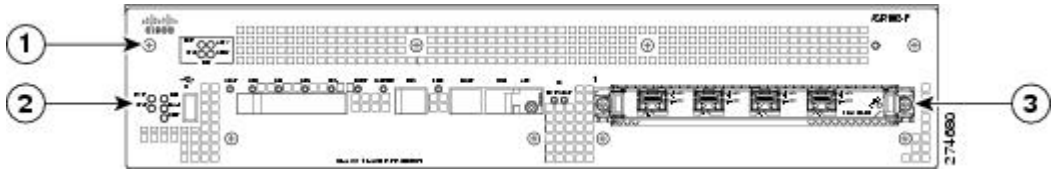

1	Slot 0	3	Slot 2
2	Slot 1	—	—

Cisco ASR 1002-F Router Components

The Cisco ASR 1002-F Router system is derived from the architecture of the Cisco ASR 1002 Router. The main components of the Cisco ASR 1002-F Router are:

- Cisco integrated RP
- Cisco integrated ASR 1002-ESP-F
- Cisco ASR 1002-SIP10-F
- AC or DC power supplies

Cisco Integrated RP and Cisco ASR 1002-ESP-F Description

The Cisco ASR 1002-F Router supports the following integrated components:

- Cisco integrated RP—The Cisco ASR 1000 Series integrated Route Processor (RP) for the Cisco ASR 1002-F Router is the central control processor and runs the network operating system. The Cisco integrated RP supports management interfaces such as the Management Ethernet port and console and auxiliary serial ports. It has LED status indicators, an RJ-45 plug for a BITS timing reference, and one USB port that can be used with smart cards for secure key distribution or for image or configuration file updates.
- Cisco ASR 1002-ESP-F services processor (does not support online insertion and removal)—The Cisco embedded services processor is based on the Cisco QuantumFlow Processor for next-generation forwarding and queuing. It performs all baseline packet routing operations, including MAC classification, Layer 2 and Layer 3 forwarding, quality of service (QoS) classification, policing and shaping, security access control lists (ACLs), VPNs, load balancing, and NetFlow. The Cisco ASR 1002-ESP-F can only be used in the Cisco ASR 1002-F Router and has forwarding performance of 2.5 Gbps and does not support online insertion or removal.

The following image shows the Cisco ASR 1002-F Router faceplate labels for the Cisco integrated RP and Cisco ASR 1002-ESP-F.

Figure 114: Cisco Integrated RP and Cisco ASR 1002-ESP-F LEDs on Cisco ASR 1002-F Router

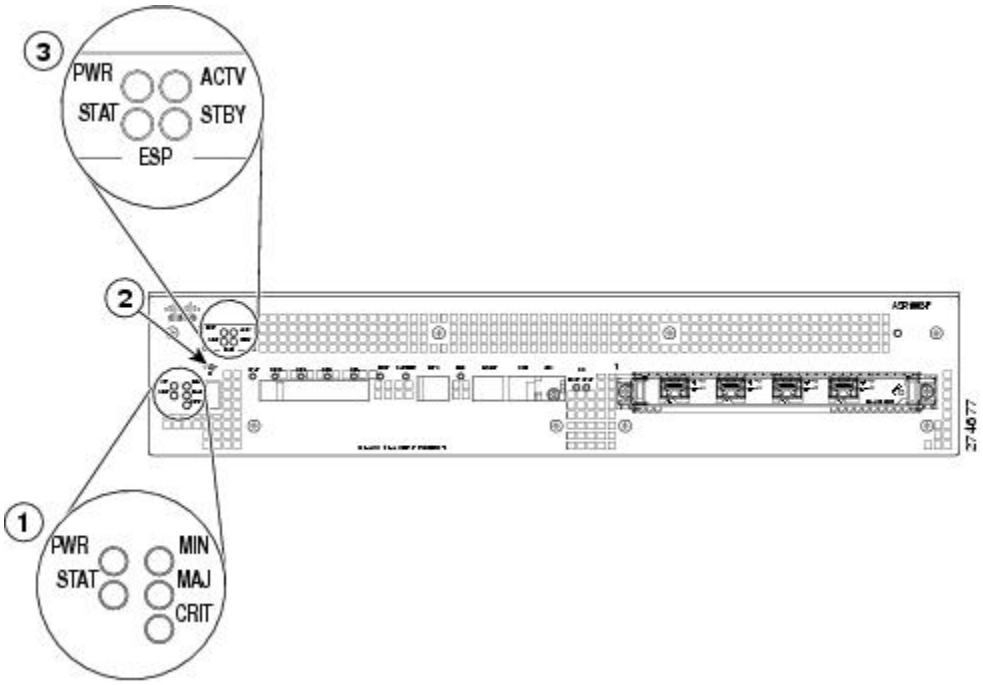

1	Cisco RP LEDs: PWR, STAT, MIN, MAJ, CRIT	2	Cisco ASR 1002-ESP-F LEDs: PWR, STAT, ACTV, STBY

The following image shows the Cisco ASR 1002-F Router faceplate labels for the Cisco integrated RP.

Figure 115: Cisco Integrated RP Faceplate Labels

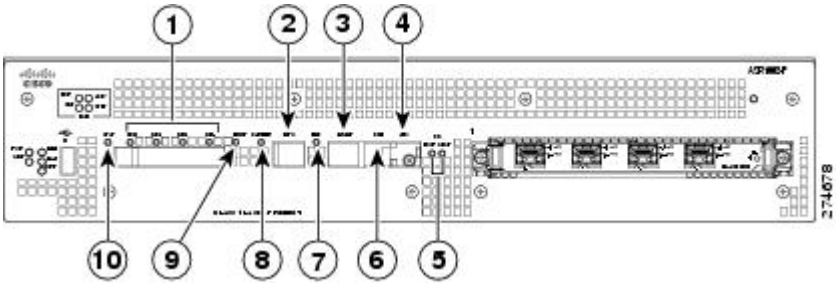

1	Gigabit Ethernet ports 0, 1, 2, 3	6	CON
2	BITS	7	LINK
3	MGMT	8	CARRIER
4	AUX	9	BOOT
5	Cisco integrated ASR 1002-SIP10-F LEDs: PWR, STAT	10	Cisco integrated RP STAT LED

The following image shows the labels for the Cisco ASR 1002-SIP10-F SPA interface processor (SIP). The ASR 1002-F router has only one half-height removable SPA.

Figure 116: Cisco ASR 1002-SIP10-F SPA Interface Processor

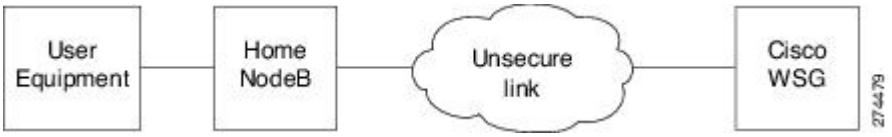

1	Cisco ASR 1002-SIP10-F	4	Port 2
2	SPA STATUS LED	5	Port 1
3	Port 3	6	Port 0

The Cisco ASR 1002-F Router SPA has three types of LEDs: two LEDs for each port on the SPA and one STATUS LED, as shown in the following image.

Figure 117: Cisco ASR 1002-F Router SPA Faceplate

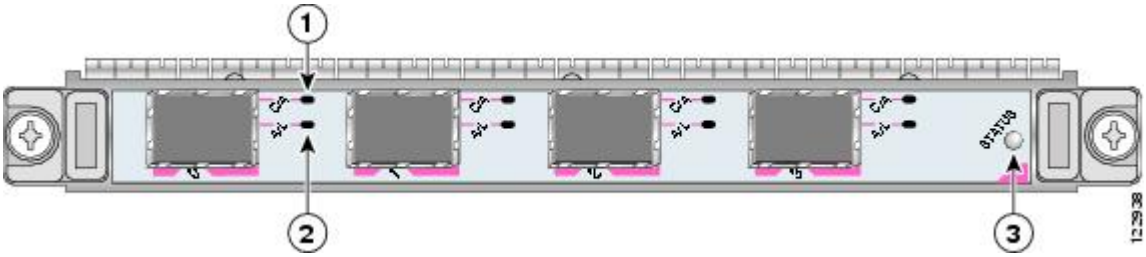

1	C/A (Carrier/Alarm)	3	SPA STATUS
2	A/L (Active/Loopback)	—	—

The following table describes the Cisco ASR 1002-F Router SPA LEDs.

Table 64: Cisco ASR 1002-F Router SPA LEDs

LED Label	Color	State	Meaning
C/A	Off	Off	SONET alarm controller is shut down.
	Green	On	Port is enabled by software and there is a valid SONET alarm signal without any alarms.
	Amber	On	Port is enabled by software and there is at least one alarm.
A/L	Off	Off	Interface is shut down.
	Green	On	Port is enabled by software and loopback is off.
	Amber	On	Port is enabled by software and loopback is on.
STATUS	Off	Off	SPA power is off.
	Green	On	SPA is ready and operational.
	Amber	On	SPA power is on and good and the SPA is being configured.

Cisco Integrated ASR 1002-SIP10-F and SPA for Cisco ASR 1002-F Router Description

The Cisco ASR 1002-SIP10-F in the Cisco ASR 1002-F Router is integrated into the chassis and you cannot insert or remove it. The Cisco integrated ASR 1002-SIP10-F provides the physical and electrical termination for one half-height SPA.

The Cisco integrated ASR 1002-SIP10-F interface supports all Cisco SPA interface processor functions and services. However, the Cisco integrated ASR 1002-SIP10-F differs in the following areas:

- Functions as the base board for the Cisco integrated RP
- Is not a field-replaceable unit (FRU) and does not support online insertion and removal (OIR)

Power Supplies in the Cisco ASR 1002-F Router

The Cisco ASR 1002-F Router power supply consists of either an AC or DC input in a closed frame power supply with two DC voltage outputs: 12 V and 3.3 V. The AC power supply operates between 85 VAC to 264 VAC and the DC power supply operates between –40.5 VDC to –72 VDC.

The power supplies are installed into the rear of the chassis and are hot pluggable. The Cisco ASR 1002-F Router supports up to 588 W of input power from an infrastructure standpoint, but the initial power supply development limit is up to 470 W of output power (AC and DC input).

AC Power Supply for the Cisco ASR 1002-F Router

The AC power supply input inlet is an IEC connector with an AC switch and the current rating on the connector and switch is 10 A. The AC power supply is secured into the chassis with two captive installation screws mounted on the faceplate.

The following table describes the LEDs on the Cisco ASR 1002-F Router.

Table 65: Cisco ASR 1002-F Router AC Power Supply LEDs

LED Label	LED	Color	Description
INPUT OK	Power supply activity	Green	The AC input voltage is greater than 85V.
		None	If the LED is not illuminated, then either the input voltage is less than 70V, or the power supply is turned off. If the AC input voltage is between 70V and 85V, the INPUT OK LED can be on, off, or flashing.
FAN OK	Power supply fan activity A bi-color LED indicates fan status.	Green	All fans are operational.
		Red	A fan failure is detected.
OUTPUT FAIL	Power supply activity	Red	If the INPUT OK LED is illuminated, this LED is red if the DC output voltages are below the minimum limit or above the maximum limit. If the INPUT OK LED is not illuminated, this LED might be off or red.
		Off	If the INPUT OK LED is illuminated, this LED is off if the DC output voltages are within the normal operating range. If the INPUT OK LED is not illuminated, this LED might be off or red.

DC Power Supply for the Cisco ASR 1002-F Router

The DC power supply input connector is a Euro-style type of terminal block. It is compliant with safety agencies' guidelines and electrical requirements of the supply. The DC power supply operates within specification from –40.5 VDC to –72 VDC continuously once the power supply DC input turn-on threshold of –43.5 V has been reached.

The DC power supply input connector accepts three wires: one positive polarity, one negative polarity, and one ground. There are provisions on the front panel to use a wire tie for strain relief of the DC input wiring. The DC power supply is secured into the system chassis with two installation captive screws mounted on the faceplate.

The following image shows the DC power supply for the Cisco ASR 1002-F Router.

Figure 118: DC Power Supply for the Cisco ASR 1002-F Router

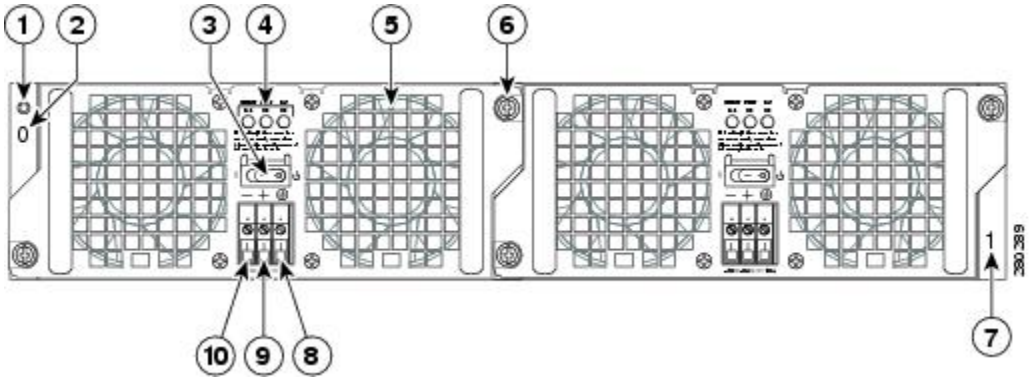

1	Chassis ESD socket	6	Captive installation screw
2	DC power supply slot 0 label	7	DC power supply slot 1 label
3	DC power supply Standby/On (|) switch	8	Ground lead
4	DC power supply LEDs	9	Positive lead
5	Fan	10	Negative lead

The following table defines the Cisco ASR 1002-F Router DC power supply LEDs on the Cisco ASR 1002-F Router.

Table 66: Cisco ASR 1002-F Router DC Power Supply LEDs

LED Label	LED	Color	Description
INPUT OK	Power supply activity	Green	The DC power supply input voltage is greater than 43.5 VDC at turn-on and remains green down to 39 VDC.
		Amber	The power supply turns off due to low input voltage (falls below 39VDC) and indicates that there is still a hazard present (voltage on the terminal block). The LED remains amber and is active to around 20 V +/-5 V.
		Off	The input is below 15V
FAN OK	Power supply fan status activity	Green	All fans are operational.
		Red	A fan failure is detected.
OUTPUT FAIL	Power supply activity	Red	The DC output is out of the specified range. When you turn the power supply on, the red LED illuminates for two to three seconds to test LED operation before going off.
		Off	The DC output voltage are within the normal operating range.

The table shows the DC power supply output voltage alarm range.

Table 67: DC Power Supply Output Voltage Alarm Threshold Ranges

Output	Minimum	Maximum
12V	10.0–11.2V	12.8–13.8V
3.3V	2.6–3.0 V	None

Power Cords Supported by the Cisco ASR 1002-F Router

The following table lists the power cords that are supported by the Cisco ASR 1002-F Router.

Table 68: Power Cords Supported by the Cisco ASR 1002-F Router

Power Cord Item Number	Description
CAB-AC-RA	Power Cord, 110 V, Right Angle
CAB-ACA-RA	Plug, Power Cord, Australian, 10 A, Right Angle
CAB-ACB10A-RA	Power Cord, Brazil, Right Angle, 10 A
CAB-ACB16A-RA	Power Cord, Brazil, Right Angle, 16 A
CAB-ACC-RA	Power Cord China, Right Angle
CAB-ACE-RA	Power Cord Europe, Right Angle
CAB-ACI-RA	Power Cord, Italian, Right Angle
CAB-ACR-RA	Power Cord Argentina, Right Angle
CAB-ACS-RA	Power Cord, Switzerland, Right Angle
CAB-ACU-RA	Power Cord UK, Right Angle
CAB-IND-RA	Power Cord India, Right Angle
CAB-JPN-RA	Power Cord-Japan, Right Angle

Installation Methods

The Cisco ASR 1002-F Router is designed for a standalone, two-rail 19-inch rack-mount (front rail only), or four-rail 19-inch rack-mount (front and rear rail).

Although rack-mounting is the preferred method of installation for the Cisco ASR 1002-F Router, you can mount the chassis on an equipment shelf or tabletop.

Note The Cisco ASR 1002-F Router usually ships fully loaded. However, you can remove components, such as the power supplies, from the chassis to make the chassis lighter for your rack installation.

Warning This warning symbol means danger. You are in a situation that could cause bodily injury. Before you work on any equipment, be aware of the hazards involved with electrical circuitry and be familiar with standard practices for preventing accidents. Use the statement number provided at the end of each warning to locate its translation in the translated safety warnings that accompanied this device. Statement 1071

Warning Before you install, operate, or service the system, read the *Regulatory Compliance and Safety Information for Cisco ASR 1000 Series Aggregation Services Routers* publication. This document provides important safety information you should know before working with the system. Statement 200

General Rack Installation Guidelines

When planning your rack installation, consider the following guidelines:

- The Cisco ASR 1002-F Router requires a minimum of 3.5 inches or 8.9 cm of vertical rack space. Measure the proposed rack location before mounting the chassis in the rack.
- Before using a particular rack, check for obstructions (such as a power strip) that could impair rack-mount installation. If a power strip does impair a rack-mount installation, remove the power strip before installing the chassis, and then replace it after the chassis is installed.
- Allow sufficient clearance around the rack for maintenance. If the rack is mobile, you can push it back near a wall or cabinet for normal operation and pull it out for maintenance (installing or moving cards, connecting cables, or replacing or upgrading components). Otherwise, allow 19 inches/48.3 cm) of clearance to remove field-replaceable units.
- Maintain a minimum clearance of 3 inches/7.62 cm on the front and back sides of the chassis for the cooling air inlet and exhaust ports, respectively. Avoid placing the chassis in an overly congested rack or directly next to another equipment rack; otherwise, the heated exhaust air from other equipment can enter the inlet air vents and cause an overtemperature condition inside the router.

Caution To prevent chassis overheating, never install a Cisco ASR 1002-F Router in an enclosed room that is not properly ventilated or air-conditioned.

- Always install heavier equipment in the lower half of a rack to maintain a low center of gravity to prevent the rack from falling over

  .
- Install and use the cable-management brackets included with the Cisco ASR 1002-F Router to keep cables organized and out of the way of the cards and processors. Ensure that cables from other equipment already installed in the rack do not impair access to the cards or require you to disconnect cables unnecessarily to perform equipment maintenance or upgrades

  .
- Install rack stabilizers (if available) before you mount the chassis

  .

- Provide an adequate chassis ground (earth) connection for your router chassis.

In addition to the preceding guidelines, review the precautions for avoiding excessive temperature conditions in the "Site Environmental Requirements" section on page 5-9 .

The following table provides the Cisco ASR 1002-F Router dimensions and weight information.

Table 69: Cisco ASR 1002-F Router Dimensions and Weight

Cisco ASR 1002-F	Dimensions
Depth	22.50 in. (57.15 cm)(including card handles, cable-management brackets, power supply handles
Height	3.47 in. (8.813 cm)—2RU rack-mount per EIA RS-310 standard
Width	17.25 in. (43.815 cm)—19-inch rack-mount
Weight	40 lb (18.143 k)—fully configured

Guidelines for an Equipment Shelf or Tabletop Installation

The chassis should already be in the area where you will install it. If you have not determined where to install your chassis, see the "Cisco ASR 1000 Series Routers Component Overview" section on page 2-1 for information about site considerations.

If you are not rack-mounting your Cisco ASR 1000 series chassis, place it on a sturdy equipment shelf or tabletop.

When installing the Cisco ASR 1002-F Router on an equipment shelf or tabletop, ensure that the surface is clean and that you have considered the following:

- The Cisco ASR 1002-F Router requires at least 3 inches (7.62 cm) of clearance at the inlet and exhaust vents (the front and rear sides of the chassis).
- The Cisco ASR 1002-F Router should be installed off the floor. Dust that accumulates on the floor is drawn into the interior of the router by the cooling fans. Excessive dust inside the router can cause overtemperature conditions and component failures

  .
- There must be approximately 19 inches (48.3 cm) of clearance at the front and rear of the chassis to install and replace FRUs, or to access network cables and equipment.
- The Cisco ASR 1002-F Router needs adequate ventilation. Do not install it in an enclosed cabinet where ventilation is inadequate.
- Have the cable-management bracket available if you plan to install it on the front of the chassis.
- An adequate chassis ground (earth) connection exists for your router chassis

  (see the Attaching a Chassis Ground Connection, on page 256).
- Always follow proper lifting practices as outlined in the next section, when handling the chassis.

Equipment Shelf or Tabletop Installation

To mount your Cisco ASR 1002-F Router on an equipment shelf or tabletop, follow these steps:

SUMMARY STEPS

1. Remove any debris and dust from the tabletop or platform, as well as the surrounding area.
2. Lift the chassis into position on the equipment shelf or tabletop. image shows how to lift the chassis.
3. Attach the front rack-mount brackets. Locate the threaded holes in the front sides of the chassis (first holes beyond the vent holes) and use the package of black screws that shipped with the chassis.
4. Align the front rack-mount bracket to one side of the chassis.
5. Insert and tighten the screws on one side.
6. Repeat Step 4 through Step 5 on the other side of the chassis. Use all the screws to secure the rack-mount brackets to the chassis.
7. Gather the two cable-management brackets and screws that shipped with your chassis. The following image shows cable-management brackets attached on the front of the Cisco ASR 1002-F Router.
8. Screw the cable-management brackets to each side of the rack-mount brackets already attached to the chassis. Use two screws for each cable-management bracket.
9. Check that all the screws are securely tightened.

DETAILED STEPS

Step 1 Remove any debris and dust from the tabletop or platform, as well as the surrounding area.

Step 2 Lift the chassis into position on the equipment shelf or tabletop. image shows how to lift the chassis.

Warning At least two people are required to lift the chassis onto a tabletop or platform. To prevent injury, keep your back straight and lift with your legs, not your back. Statement 164

Figure 119: Lifting the Chassis

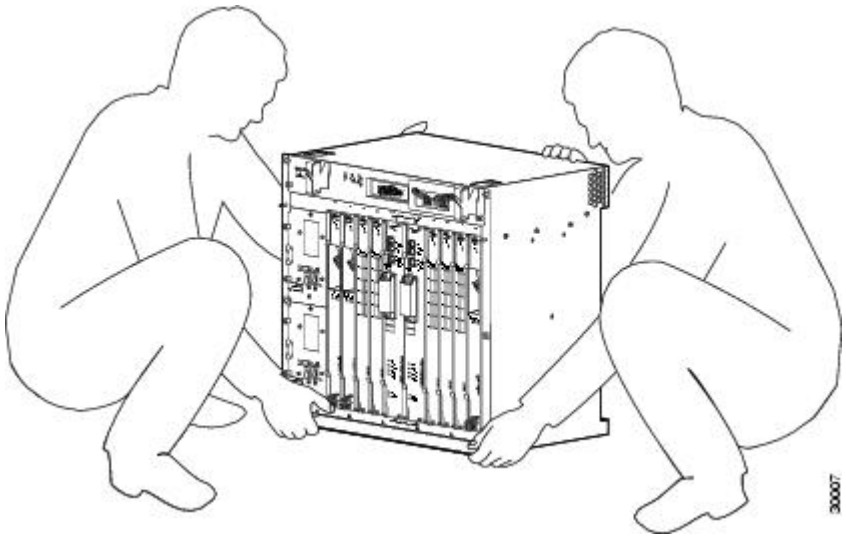

Note The chassis in the above image does not represent the Cisco ASR 1002-F Router. This is only an example of how to lift a Cisco chassis.

Step 3 Attach the front rack-mount brackets. Locate the threaded holes in the front sides of the chassis (first holes beyond the vent holes) and use the package of black screws that shipped with the chassis.

Step 4 Align the front rack-mount bracket to one side of the chassis.

Step 5 Insert and tighten the screws on one side.

Step 6 Repeat Step 4 through Step 5 on the other side of the chassis. Use all the screws to secure the rack-mount brackets to the chassis.

Note The chassis rack-mount brackets must be installed first so that you can attach the cable-management brackets to the chassis rack-mount brackets after the chassis is installed in the rack.

Step 7 Gather the two cable-management brackets and screws that shipped with your chassis. The following image shows cable-management brackets attached on the front of the Cisco ASR 1002-F Router.

Note Make certain that the cable-management bracket "U" feature device has the open end pointing upwards when you attach it to the chassis

Figure 120: Attaching the Cable-Management Brackets to the Cisco ASR 1002-F Router

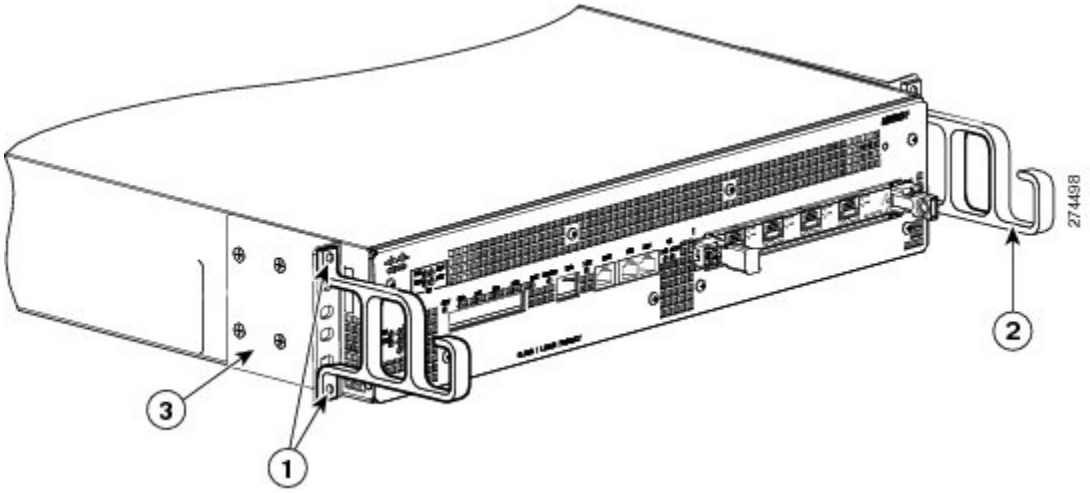

1	Cable-management bracket top screw hole and bottom screw hole	3	Chassis front rack-mount bracket
2	Cable-management bracket "U" feature	—	—

Step 8 Screw the cable-management brackets to each side of the rack-mount brackets already attached to the chassis. Use two screws for each cable-management bracket.

Step 9 Check that all the screws are securely tightened.

What to do next

Go to the Attaching a Chassis Ground Connection, on page 256 to continue the installation.

Rack-Mounting the Cisco ASR 1002-F Router

The Cisco ASR 1002-F Router can be installed in an existing rack with equipment or in an empty rack with no equipment. The chassis can be mounted in two equipment rack types:

- Two-post rack, 19-inch or 23-inch equipment rack. Inner clearance (the width between the inner sides of the two posts or rails) must be at least 19 inches (48.26 cm). The height of the chassis is 3.47 inches (8.8 cm). Airflow through the chassis is from front to back

  .

Note If you are using a two-post rack, secure the rack to the floor surface to prevent tipping and avoid bodily injury.

- Four-post, 19-inch equipment rack. Inner clearance (the width between the inner sides of the two posts or rails) must be at least 19 inches (48.26 cm). The height of the chassis is 3.47 inches/8.8 cm). Airflow through the chassis is from front to back.

The Cisco ASR 1002-F Router can be installed with both front or rear rack-mount brackets.

Verifying Rack Dimensions

Before you install the chassis, measure the space between the vertical mounting flanges (rails) on your equipment rack to verify that the rack conforms to the measurements shown in the following image.

SUMMARY STEPS

1. Mark and measure the distance between two holes on the left and right mounting rails. The distance should measure 18.31 inches ± 0.06 inches (46.5 cm ± 0.15 cm).
2. Measure the space between the inner edges of the left front and right front mounting flanges on the equipment rack. The space must be at least 17.7 inches (45 cm) to accommodate the chassis, which is 17.25 inches (43.8 cm) wide and fits between the mounting posts on the rack.

DETAILED STEPS

Step 1 Mark and measure the distance between two holes on the left and right mounting rails. The distance should measure 18.31 inches ± 0.06 inches (46.5 cm ± 0.15 cm).

Note Measure for pairs of holes near the bottom, middle, and top of the equipment rack to ensure that the rack posts are parallel.

Step 2 Measure the space between the inner edges of the left front and right front mounting flanges on the equipment rack. The space must be at least 17.7 inches (45 cm) to accommodate the chassis, which is 17.25 inches (43.8 cm) wide and fits between the mounting posts on the rack.

Figure 121: Verifying Equipment Rack Dimensions

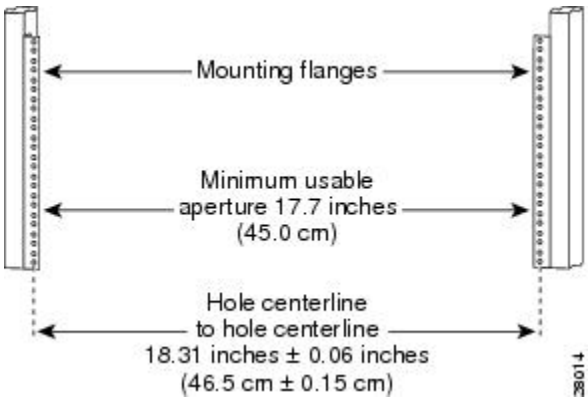

Attaching the Chassis Rack-Mount Brackets

This section explains how to attach the front and rear rack-mount brackets to the chassis. Before installing the chassis in the rack, you must install the rack-mount brackets on each side of the chassis.

The parts and tools required for installing the rack-mount brackets and cable-management brackets are listed in the “Tools and Equipment” section on page 5-23 .

Note The cable-management brackets are attached to the chassis after you install the chassis rack-mount brackets on the chassis and mount the chassis in the rack.

Chassis Front Rack-Mount Brackets

Determine where in the rack you want the chassis to be mounted. If you are mounting more than one chassis in the rack, then start from the bottom up or the center of the rack.

To install the front rack-mount brackets on the Cisco ASR 1002-F Router, perform the following steps:

SUMMARY STEPS

1. Locate the threaded holes on the side of the chassis. Make certain that you hold the front rack-mount bracket with the ear and holes facing outward and towards the front of the chassis.
2. Position the front rack-mount bracket top hole with the chassis first top hole behind the side vent holes.
3. Insert and tighten the black screws on one side.
4. Repeat Step 1 through Step 3 on the other side of the chassis. Use the black screws to secure the rack-mount brackets to the chassis.
5. Install the chassis in a rack. To install the Cisco ASR 1002-F Router in a rack, go to the Installing the Cisco ASR 1002-F Router in a Rack.

DETAILED STEPS

Step 1 Locate the threaded holes on the side of the chassis. Make certain that you hold the front rack-mount bracket with the ear and holes facing outward and towards the front of the chassis.

The following image shows where to attach the front rack-mount brackets to the Cisco ASR 1002-F Router. Depending on the bracket holes you use, the chassis may protrude in the rack.

Figure 122: Attaching the Front Rack-Mount Brackets to the Cisco ASR 1002-F Router

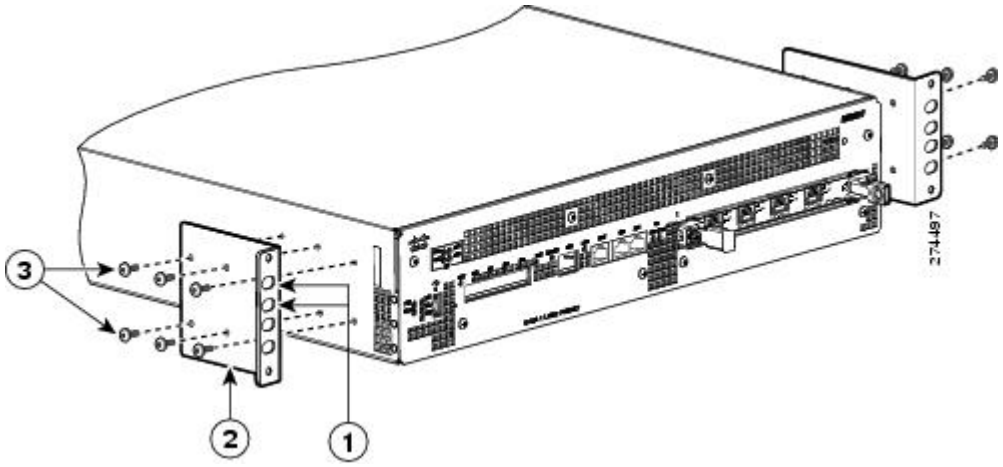

1	Front rack-mount bracket ear and holes	3	Front rack-mount bracket screws
2	Front rack-mount bracket	—	—

Step 2 Position the front rack-mount bracket top hole with the chassis first top hole behind the side vent holes.

Step 3 Insert and tighten the black screws on one side.

Step 4 Repeat Step 1 through Step 3 on the other side of the chassis. Use the black screws to secure the rack-mount brackets to the chassis.

Step 5 Install the chassis in a rack. To install the Cisco ASR 1002-F Router in a rack, go to the Installing the Cisco ASR 1002-F Router in a Rack.

What to do next

This completes the steps for attaching the front rack-mount brackets to the Cisco ASR 1002-F Router.

Chassis Rear Rack-Mount Brackets

If you are rack-mounting the chassis using the rear rack-mount brackets, then this type of installation provides for the chassis being recessed in the rack.

To install the rear rack-mount brackets on the Cisco ASR 1002-F Router, perform the following steps:

SUMMARY STEPS

1. Locate the threaded ear holes on the rear side of the chassis. Make certain that you hold the rear rack-mount bracket with the ear and holes facing outward and towards the rear of the chassis.
2. Position the rear rack-mount bracket top hole with the chassis top hole from the back.
3. Insert and tighten the screws on one side.
4. Repeat Step 1 through Step 3 on the other side of the chassis. Use the remaining screws to secure the rear rack-mount brackets to the chassis.

DETAILED STEPS

Step 1 Locate the threaded ear holes on the rear side of the chassis. Make certain that you hold the rear rack-mount bracket with the ear and holes facing outward and towards the rear of the chassis.

The following image shows where to attach the rear rack-mount brackets to the Cisco ASR 1002-F Router.

Figure 123: Attaching the Rear Rack-Mount Brackets to the Cisco ASR 1002-F Router

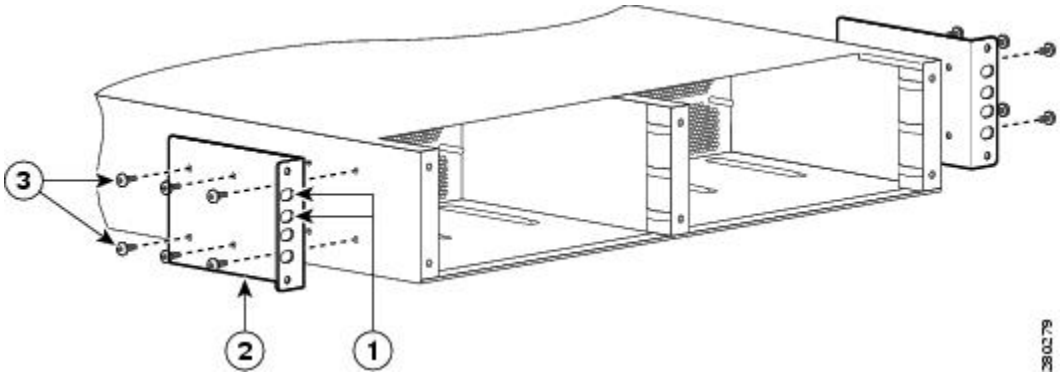

1	Rear rack-mount bracket ear and holes	3	Rear rack-mount bracket screws
2	Rear rack-mount bracket	—	—

Step 2 Position the rear rack-mount bracket top hole with the chassis top hole from the back.

Step 3 Insert and tighten the screws on one side.

Step 4 Repeat Step 1 through Step 3 on the other side of the chassis. Use the remaining screws to secure the rear rack-mount brackets to the chassis.

What to do next

This completes the steps for attaching the rear rack-mount brackets to the Cisco ASR 1002-F Router.

Caution Before you mount the Cisco ASR 1002-F Router in a rack, make certain you understand which rack-mount bracket ear holes to use when positioning the chassis in the rack. As a result of using the designated ear holes on the rack-mount bracket, the cable-management bracket installation will be made easier.

Installing the Cisco ASR 1002-F Router in a Rack

After installing the rack-mount brackets on the chassis, you mount the chassis by securing the rack-mount brackets to two posts or mounting strips in the rack using the screws provided.

Note Because the rack-mount brackets support the weight of the entire chassis, be sure to use all the screws to fasten the rack-mount brackets to the rack posts.

Danger To prevent bodily injury when mounting or servicing this unit in a rack, you must take special precautions to ensure that the system remains stable.

The following guidelines are provided to ensure your safety:

- This unit should be mounted at the bottom of the rack if it is the only unit in the rack.
- When mounting this unit in a partially filled rack, load the rack from the bottom to the top with the heaviest component at the bottom of the rack

  .
- If the rack is provided with stabilizing devices, install the stabilizers before mounting or servicing the unit in the rack. Statement 1006

We recommend that you allow at least 1 or 2 inches (2.54 or 5.08 cm) of vertical clearance between the router and any equipment directly above and below it.

To install the chassis in the rack, perform the following steps:

Step 1 On the chassis, ensure that all screws on the installed components are securely tightened.

Step 2 Make sure that your path to the rack is unobstructed. If the rack is on wheels, ensure that the brakes are engaged or that the rack is otherwise stabilized. For chassis rack-mount installation types, see the “Two-Post Rack Installation” or the “Four-Post Rack Installation.”

Step 3 (Optional) Install a shelf in the rack to support Cisco ASR 1002-F Router. If you use a shelf, this will help support the chassis while you secure it to the rack.

Step 4 Lift the chassis into position between the rack posts.

Step 5 Align the mounting bracket ear holes with the rack post holes to attach the chassis to the rack.

Note If you are using a shelf, raise the chassis to the level of the shelf. Let the bottom of the chassis rest on the brackets, but continue to support the chassis.

Step 6 Position the chassis until the rack-mounting flanges are flush against the mounting rails on the rack.

Step 7 Hold the chassis in position against the mounting rails in the equipment rack and follow these steps:

a) Insert the bottom screw into the second bracket ear hole up from the bottom of the rack-mount ear and use a hand-held screwdriver to tighten the screw to the rack rail.

b) Insert the top screw into the second bracket ear hole from the top of the rack-mount ear diagonally from the bottom screw and tighten the screw to the rack rail.

c) Insert the four screws to secure the chassis to the rack equipment.

Tip As a result of using the specified rack-mount bracket ear holes, the cable-management bracket can be easily attached to the rack-mount bracket when the chassis is in the rack.

Step 8 Tighten all screws on each side to secure the chassis to the equipment rack.

What to do next

You can install your Cisco ASR 1002-F Router on a two-post or four-post rack. See the "*Two-Post Rack Installation*" or the "*Four-Post Rack Installation*."

Two-Post Rack Installation

The Cisco ASR 1002-F Router can be installed on a two-post rack, either a 19-inch or 23-inch rack.

Note Inner clearance (the width between the inner sides of the two posts or rails) must be at least 19 inches (48.26 cm). The height of the chassis is 3.47 inches (8.8 cm). Airflow through the chassis is from front to back.

Caution If you are using a two-post rack, secure the rack to the floor surface to prevent tipping and avoid bodily injury and component damage.

Step 1 Position the chassis so the front is closest to you and lift it carefully into the rack. To prevent injury, avoid any sudden twists or moves.

The folowing image shows the Cisco ASR 1002-F Router on a two-post rack.

Figure 124: Installing the Cisco ASR 1002-F Router on a Two-Post Equipment Rack

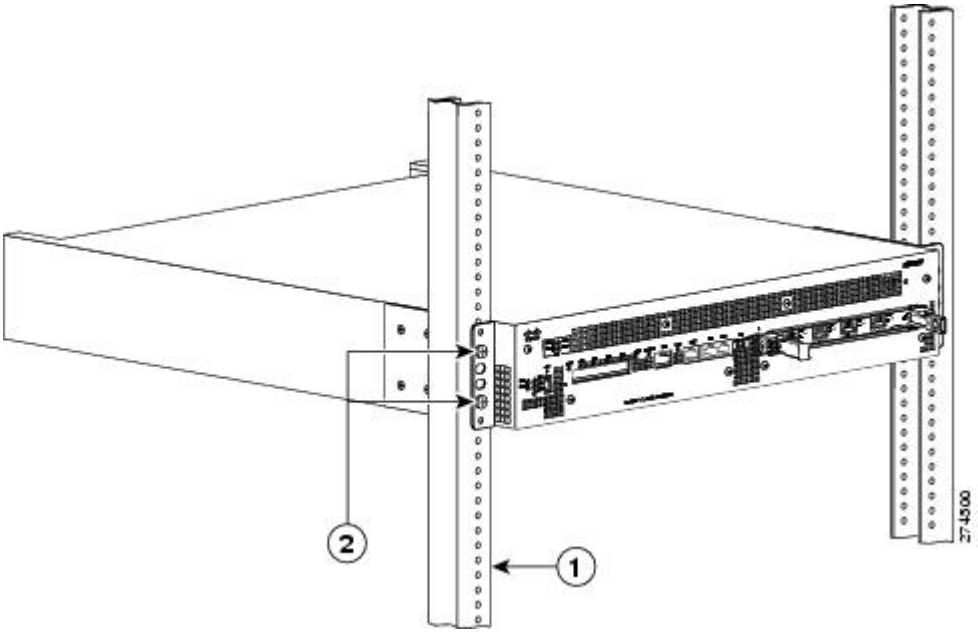

1	Rack equipment rail	2	Front rack-mount bracket ear and holes

Step 2 Slide the chassis into the rack, pushing it back until the brackets meet the mounting strips or posts on both sides of the rack.

Step 3 Keeping the brackets flush against the posts or mounting strips, align the holes in the brackets with the holes on the rack or mounting strip.

Step 4 For each bracket, insert and tighten two screws to the rack on both sides.

What to do next

This completes the procedure for installing the chassis on a two-post rack. Proceed to the Attaching a Chassis Ground Connection. to continue the installation.

Four-Post Rack Installation

The Cisco ASR 1002-F Router can be flush-mounted in a 19-inch equipment rack using the rack-mounting kit provided with your system. When handling the chassis, always follow proper lifting practices. See the "*Chassis-Lifting Guidelines*" section.

Note Inner clearance (the width between the inner sides of the two posts or rails) must be at least 19 inches (48.26 cm). The height of the chassis is 3.47 inches (8.8 cm). Airflow through the chassis is from front to back.

Caution Make sure the rack is stabilized.

Step 1 (Optional) Install a shelf in the rack to support the Cisco ASR 1002-F Router. If you are using a shelf, raise the chassis to the level of the shelf. Let the bottom of the chassis rest on the brackets, but continue to support the chassis. Lift the chassis into the rack, grasping underneath the power supply bays.

Step 2 Position the chassis until the rack-mounting flanges are flush against the mounting rails on the rack.

Note Use the second hole up from the bottom of the rack-mount bracket and the second hole down from the top of the rack-mount bracket. This will make it easier to attach the cable-management brackets to the chassis in the equipment rack.

Step 3 Hold the chassis in position against the mounting rails while the second person finger-tightens a screw to the rack rails on each side of the chassis.

Step 4 Tighten the screws to the rack rails on each side of the chassis.

Step 5 Tighten all the screws on each side to secure the chassis to the equipment rack.

The following figure shows the Cisco ASR 1002-F Router on a four-post rack.

Figure 125: Installing the Cisco ASR 1002-F Router on a Four-Post Equipment Rack

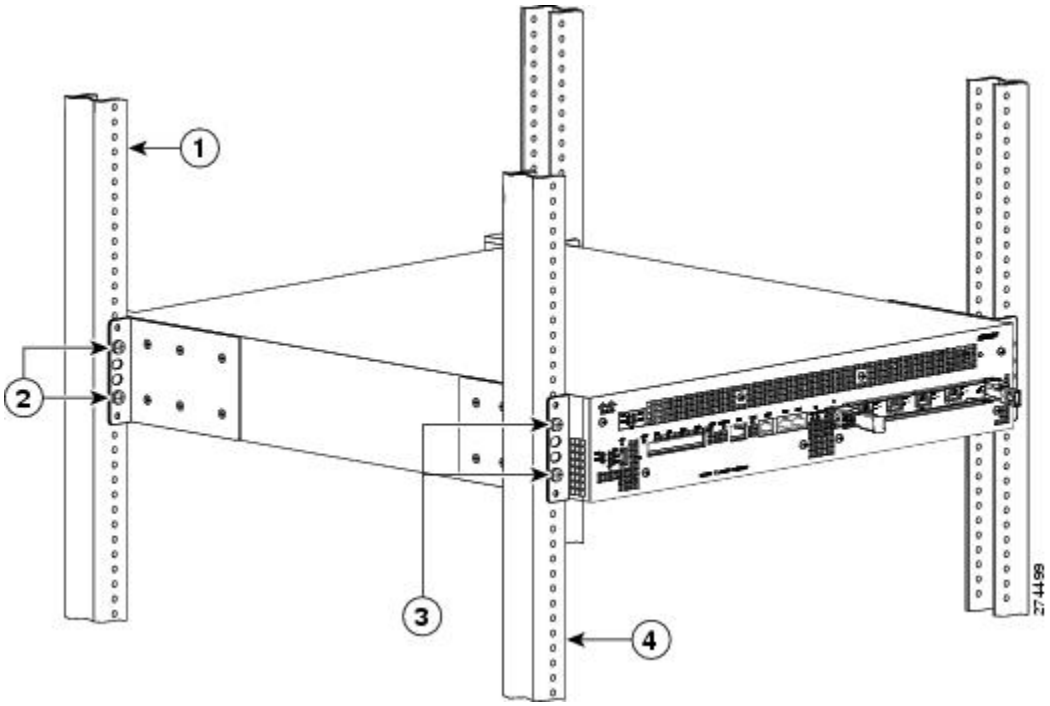

1	Rear rack equipment rail	3	Front rack-mount bracket ear and holes
2	Rear rack-mount bracket ear and holes	4	Front rack equipment rail

Step 6 Use a level to verify that the tops of the two brackets are level, or use a measuring tape to verify that both brackets are the same distance from the top of the rack rails.

What to do next

This completes the procedure for installing the chassis on a four-post rack. Proceed to the "*Attaching the Cable-Management Bracket*" section to continue the installation.

Attaching the Cable-Management Bracket

The cable-management brackets mount to each rack-mount bracket on the chassis to provide cable-management to both sides of the chassis (parallel with card orientation). These brackets are screw mounted to the rack-mount brackets to allow easy installation and removal of cables.

The cable-management brackets for the Cisco ASR 1002-F Router contain one independent cable-management "U" features with two screws for each bracket.

Note Make certain that the cable-management bracket "U" feature is facing upwards when you attach it to the chassis.

Follow these steps to attach the cable-management brackets to both sides of the Cisco ASR 1002-F Router in the rack:

SUMMARY STEPS

1. Align the cable-management bracket to the rack-mount bracket on one side of the Cisco ASR 1002-F Router. The cable-management bracket aligns to the top hole of the chassis rack-mount bracket.
2. Insert one screw through the top screw hole of the cable-management bracket and into the chassis rack-mount bracket and tighten the screw using a Phillips screwdriver.
3. Insert one screw through the bottom screw hole of the cable-management bracket and into the chassis rack-mount bracket and tighten the screw using a Phillips screwdriver (see Figure 126: Attaching the Cable-Management Brackets to the Cisco ASR 1002-F Router, on page 256).
4. Repeat Step 1 through Step 3 for the other side of the Cisco ASR 1002-F Router.

DETAILED STEPS

Step 1 Align the cable-management bracket to the rack-mount bracket on one side of the Cisco ASR 1002-F Router. The cable-management bracket aligns to the top hole of the chassis rack-mount bracket.

Step 2 Insert one screw through the top screw hole of the cable-management bracket and into the chassis rack-mount bracket and tighten the screw using a Phillips screwdriver.

The following image shows where to attach the cable-management brackets to the Cisco ASR 1002-F Router.

Figure 126: Attaching the Cable-Management Brackets to the Cisco ASR 1002-F Router

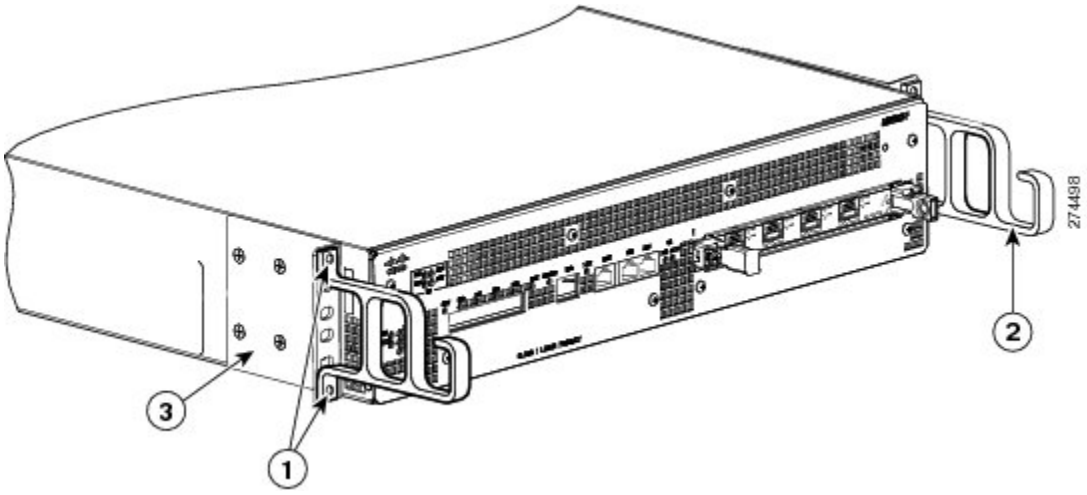

1	Cable-management bracket top screw hole and bottom screw hole	3	Chassis front rack-mount bracket
2	Cable-management bracket "U" feature	—	—

Step 3 Insert one screw through the bottom screw hole of the cable-management bracket and into the chassis rack-mount bracket and tighten the screw using a Phillips screwdriver (see Figure 126: Attaching the Cable-Management Brackets to the Cisco ASR 1002-F Router, on page 256).

Step 4 Repeat Step 1 through Step 3 for the other side of the Cisco ASR 1002-F Router.

What to do next

This completes the procedure for installing the cable-management brackets on the Cisco ASR 1002-F Router.

Attaching a Chassis Ground Connection

Connecting the Cisco ASR 1002-F chassis to ground is required for all DC-powered installations and any AC-powered installation where compliance with Telcordia grounding requirements is necessary.

Caution The grounding lug must be installed, all cards or filler plates must be fully inserted, screwed in, and grounded to prevent a potential hazard in a telecom line.

Have the recommended tools and supplies available before you begin this procedure.

Warning This equipment must be grounded. Never defeat the ground conductor or operate the equipment in the absence of a suitably installed ground conductor. Contact the appropriate electrical inspection authority or an electrician if you are uncertain that suitable grounding is available. Statement 1024

Before you connect power or turn on power to your router, you must provide an adequate chassis ground (earth) connection for the Cisco ASR 1002-F Router. The chassis grounding lug and the respective screws are provided in the accessory kit that ships with your Cisco ASR 1002-F Router.

Caution The grounding wire is always the first to be installed or connected and the last to be removed or disconnected.

The following image shows the location of the ground connector on the side of the Cisco ASR 1002-F Router.

Figure 127: Cisco ASR 1002-F Router Chassis Ground Lug Location and eUSB Side Panel Door

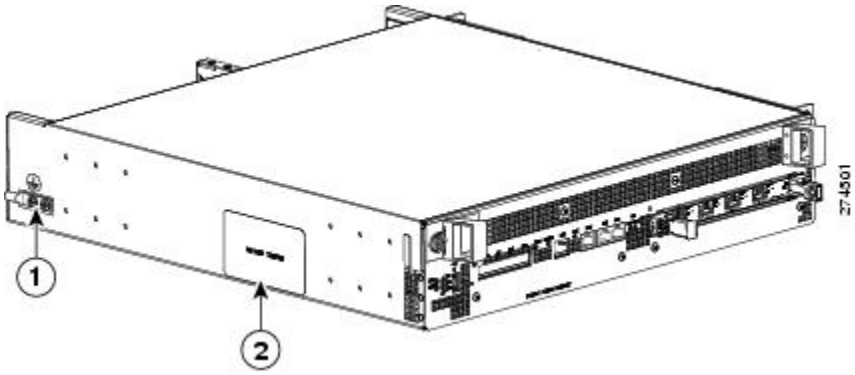

1	Cisco ASR 1002-F Router ground connector location	2	eUSB panel door

To attach the grounding lug to the chassis ground connector on your chassis, follow these steps:

SUMMARY STEPS

1. Use the wire stripper to strip one end of the AWG #6 wire approximately 0.75 inches (19.05 mm).
2. Insert the AWG #6 wire into the wire receptacle on the grounding lug as shown in the following image.
3. Use the manufacturers's recommended crimping tool to carefully crimp the wire receptacle around the wire; this step is required to ensure a proper mechanical connection.
4. Locate the chassis ground connector on the side of your chassis as shown in the following imave.
5. Insert the two screws through the holes in the grounding lug as shown in Figure 129: Attaching a Grounding Lug to the Chassis Ground Connector, on page 258.
6. Use the Number 2 Phillips screwdriver to carefully tighten the screws until the grounding lug is held firmly to the chassis. Do not overtighten the screws.
7. Connect the opposite end of the ground wire to the appropriate grounding point at your site to ensure an adequate chassis ground.

DETAILED STEPS

Step 1 Use the wire stripper to strip one end of the AWG #6 wire approximately 0.75 inches (19.05 mm).

Step 2 Insert the AWG #6 wire into the wire receptacle on the grounding lug as shown in the following image.

Figure 128: Attaching the Ground Wire to the Grounding Lug

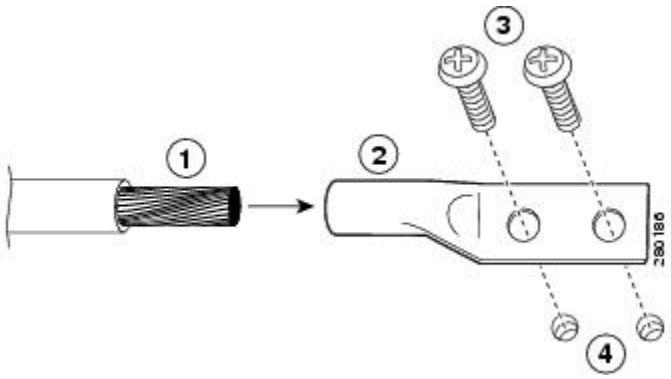

1	Ground wire	3	Ground lug screws
2	Grounding lug	4	Chassis ground connector holes

Step 3 Use the manufacturers's recommended crimping tool to carefully crimp the wire receptacle around the wire; this step is required to ensure a proper mechanical connection.

Step 4 Locate the chassis ground connector on the side of your chassis as shown in the following imave.

Step 5 Insert the two screws through the holes in the grounding lug as shown in Figure 129: Attaching a Grounding Lug to the Chassis Ground Connector, on page 258.

Figure 129: Attaching a Grounding Lug to the Chassis Ground Connector

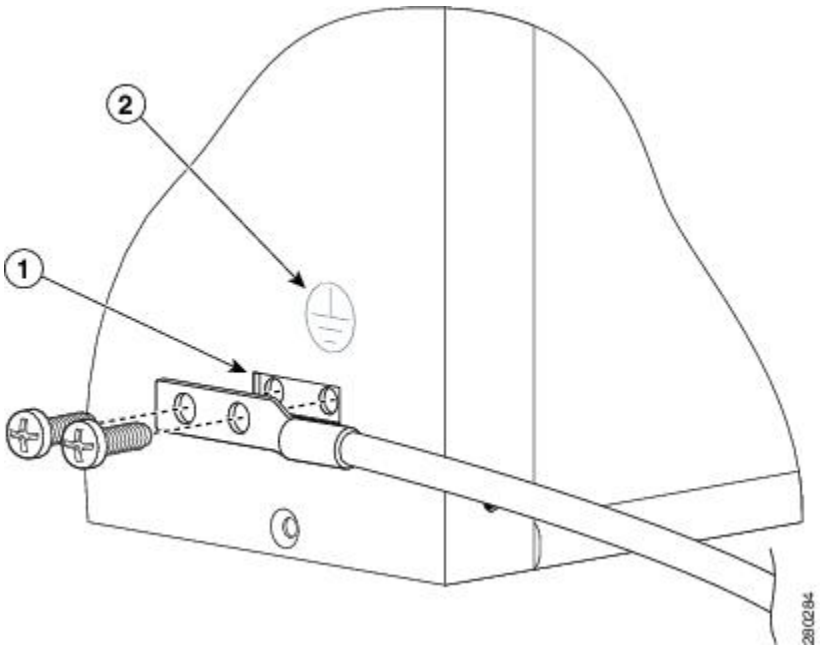

1	Chassis ground connector	2	Ground symbol

Step 6 Use the Number 2 Phillips screwdriver to carefully tighten the screws until the grounding lug is held firmly to the chassis. Do not overtighten the screws.

Step 7 Connect the opposite end of the ground wire to the appropriate grounding point at your site to ensure an adequate chassis ground.

What to do next

This completes the procedure for attaching a chassis ground connection. Go to the following cabling sections for information on attaching cables.

Connecting the Shared Port Adapter Cables

The instructions for connecting the cables for the shared port adapter (SPA) installed in the Cisco ASR 1002-F Router are contained in the respective configuration documents for SPAs. For detailed SPA information, see Cisco ASR 1000 Series Aggregation Services Routers SIP and SPA Hardware Installation Guide .

Connecting the Console and Auxiliary Port Cables

This section describes how to attach a cable to the Cisco integrated RP console or auxiliary ports on the Cisco ASR 1002-F Router. The Cisco ASR 1002-F Router uses RJ-45 ports for both the auxiliary port and console port to attach a console terminal.



Caution To meet Class A emission requirements on the Cisco ASR 1002-F Router, shielded cables must be used for the console and auxiliary port connectors.

Before you can use the console interface on the router using a terminal or PC, you must perform the following steps:

Step 1 Before connecting a terminal to the console port or auxiliary port, configure the terminal to match the chassis console port as follows: 9600 baud, 8 data bits, no parity, 1 stop bits (9600 8N1).

Step 2 Connect to the port using an RJ-45 cable to a DB-9 cable.

Note For information about how to change the default settings to meet the requirements of your terminal or host, see *Cisco IOS Terminal Services Configuration Guide*. For route processor pinout specifications, see the “Cisco ASR1000-RP2 Pinout Specifications” section.

The following figure shows the integrated RP console and auxiliary port connectors.

Figure 130: Cisco ASR 1002-F Router Integrated RP Console and Auxiliary Port Connectors

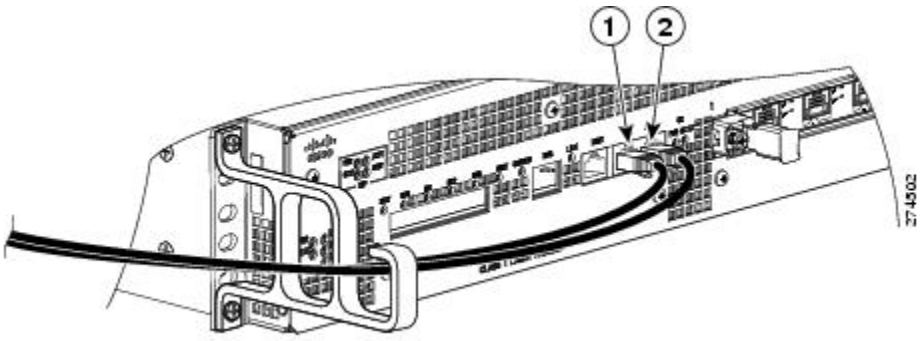

1	Console port (CON)	2	Auxiliary port (AUX)

Step 3 After you establish normal router operation, you can disconnect the console terminal.

What to do next

Note A connection will not be established when setting up an out-of-band connection or modem connection in the auxiliary port and the console port.

Connecting a Cable to the Management Ethernet Port

This section describes how to attach a cable to the Cisco Management Ethernet port on the Cisco ASR 1002-F Router.

Step 1 Insert an Ethernet RJ-45 cable into the MGMT ETHERNET port (see).

Figure 131: Cisco ASR 1002-F Router Integrated RP Management Ethernet Port Connector

1	Management Ethernet port

Step 2 Insert the other end of the RJ-45 cable into your management device or network.

Step 3 Configure the port connection to a fixed speed through the command-line interface (CLI).

Connecting Power to the Cisco ASR 1002-F Router

Warning The covers are an integral part of the safety design of the product. Do not operate the unit without the covers installed in empty slots. Statement 1077

Warning When you install the unit, the ground connection must always be made first and disconnected last. Statement 1046

Danger Before performing any of the following procedures, ensure that power is removed from the DC circuit. Statement 1003

Warning Only trained and qualified personnel should be allowed to install, replace, or service this equipment. Statement 1030

This section provides the procedures for connecting AC-input and DC input power to your Cisco ASR 1002-F Router.

The DC power supply for the Cisco ASR 1006, Cisco ASR 1004, Cisco ASR 1002, and Cisco ASR 1002-F routers operate at individual specifications. The following table shows the common input ranges and circuit breaker requirements.

Table 70: Cisco ASR 1000 Series Router DC Power Supply System Input Requirements

Cisco ASR 1000 Series Router DC Power Supply	**System Input Rating (Amps)**	**Circuit Breaker Amps**	**AWG # Wire**		
		Minimum	Maximum	Minimum	Maximum
Cisco ASR 1006	40	Always 50	Always AWG #6 wire		
Cisco ASR 1004	24	30	40	10	8
Cisco ASR 1002 and Cisco ASR 1002-F 1	16	20	30	12	10
1 The Cisco ASR 1002-F Router DC power supply, with 16 A input rating must use an AWG #12 gauge wire for a 20 A circuit breaker and an AWG #10 gauge wire for a 30 A circuit breaker.					

Note All Cisco ASR 1000 Series Router AC power supplies must be connected to a branch circuit that does not exceed 20 A.

Read the safety warnings before you begin.

Warning Never install an AC power module and a DC power module in the same chassis. Statement 1050

Warning Installation of the equipment must comply with local and national electrical codes. Statement 1074

Warning This equipment must be grounded. Never defeat the ground conductor or operate the equipment in the absence of a suitably installed ground conductor. Contact the appropriate electrical inspection authority or an electrician if you are uncertain that suitable grounding is available. Statement 1024

Warning This unit might have more than one power supply connection. All connections must be removed to de-energize the unit. Statement 1028

Warning This product relies on the building's installation for short-circuit (overcurrent) protection. Ensure that the protective device is rated not greater than: AC power supplies 20 A and DC power supplies 30 A. Statement 1005

Connecting AC Input Power to the Cisco ASR 1002-F Router

This section provides instructions for installing the AC power supply into the Cisco ASR 1002-F Router. shows the AC power supply labels. The following image shows the Cisco ASR 1002-F Router AC power supply.

Figure 132: Cisco ASR 1002-F Router AC Power Supply Labels

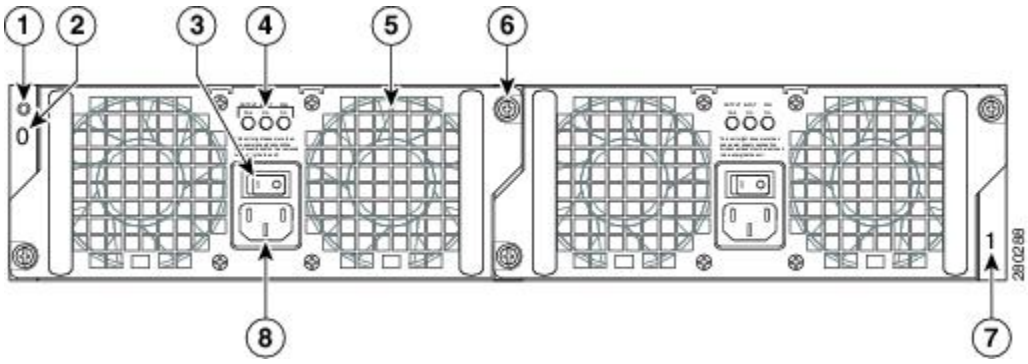

1	Chassis ESD socket	5	Fan
2	AC power supply slot 0 label	6	Captive installation screw
3	AC power supply On (|) /Off (O) switch	7	AC power supply slot 1 label
4	AC power supply LEDs	8	AC power inlet

To connect AC power to the Cisco ASR 1002-F Router, follow these steps:

SUMMARY STEPS

1. At the rear of the router, check that the power switch is in the Off (O) position.
2. Insert the AC power cable into the power supply AC inlet.
3. To ensure that the AC power cord does not interfere with other cables or wires, dress the AC power cable in one of the following ways:
4. Plug the AC power supply cable into the AC power source.

DETAILED STEPS

Step 1 At the rear of the router, check that the power switch is in the Off (O) position.

Step 2 Insert the AC power cable into the power supply AC inlet.

Step 3 To ensure that the AC power cord does not interfere with other cables or wires, dress the AC power cable in one of the following ways:

a) Leave a small service loop in the AC power cord from the inlet and secure the power cord through the AC power supply handle as shown in the following image.

Figure 133: Cisco ASR 1002-F Router AC Power Supply in Slot 1 with Power Cord

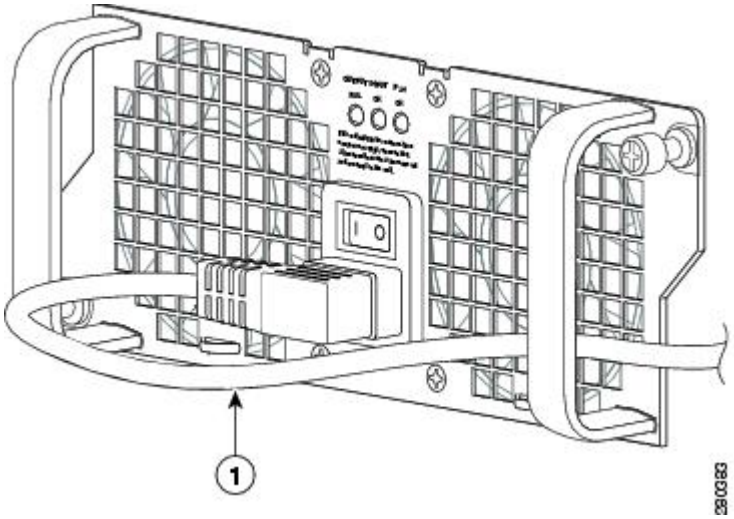

1	AC power cord and service loop	—	—

b) Run the power cord below the handles of power supplies in slot 0 and slot 1. Make sure the power cord is hanging loose so that it will not be disconnected from the AC power inlet as shown in the foloiwng image.

Figure 134: Cisco ASR 1002-F Router AC Power Supplies in Slot 0 and Slot 1 with Power Cord

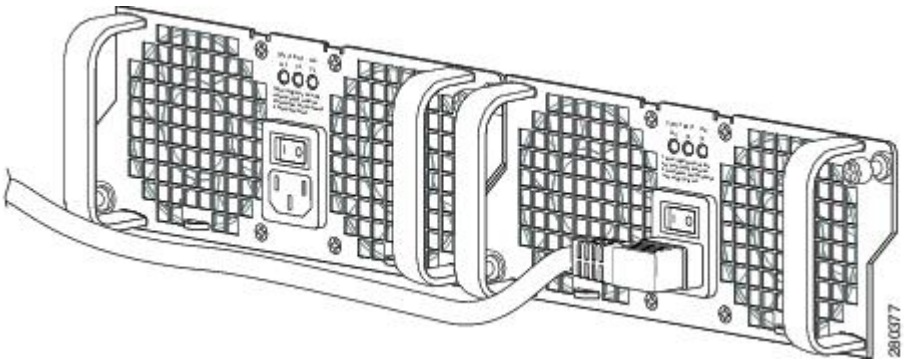

Caution Do not run the AC power cord through the power supply handles as shown in the following image.

Figure 135: Incorrect Cabling on the Cisco ASR 1002-F Router AC Power Supplies

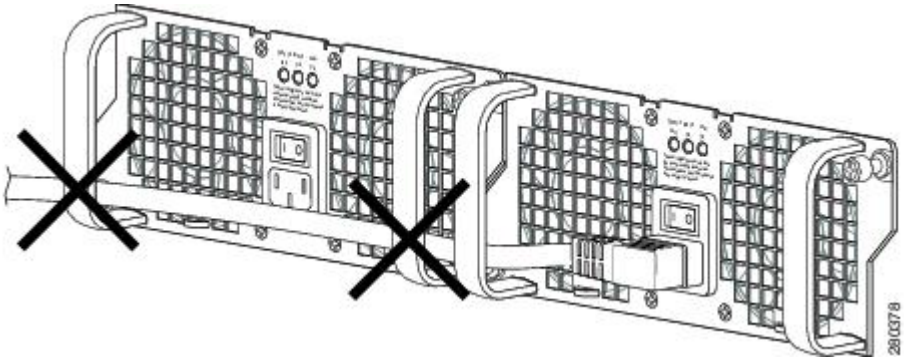

Note Using a cable tie for the AC power cord is optional and not necessary. However, if you attach the AC power cord to a power supply tab and then remove the AC power cord for some reason, check for any damage to the cable after you cut off the cable tie. If the AC power cord is damaged, replace it immediately.

Note Four power supplies must be installed in the chassis at all times, with a minimum of two power supplies (one per zone) connected to the mains in order to power on the system and ensure sufficient cooling. The system fans are inside the power supply units and must spin for cooling. Because all the system fans can be powered by one power supply, the second power supply unit does not have to be powered on, but must be connected.

Caution If you remove a power supply from a system that has four power supplies that are connected and powered on, the system can run only for a maximum of five minutes before shutting down. However, because the fans and power elements are independent within the power supply, the replacement power supply does not have to be energized within five minutes. The only requirement is that the power supply be installed in the chassis in order to energize the fans and maintain proper system cooling.

Step 4 Plug the AC power supply cable into the AC power source.

What to do next

This completes the procedure for connecting AC input power to the Cisco ASR 1002-F Router.

Connecting DC Input Power to the Cisco ASR 1002-F Router

The DC power supply input connector is a Euro-style type terminal block. A means to provide strain relief to the input wires is provided on the power supply. The connection order is negative (–), positive (+), and ground (GND); but this is the order from left to right that the terminals appear on the power supply, not the order in which the leads should be connected during installation. The order the leads should be connected is ground (GND), positive (+), and negative (–).

The recommended branch circuit breaker for the Cisco ASR 1002-F Router DC power supply is 30 A. Use an AWG #10 wire gauge on the 30 A circuit.

The following image shows the DC power supply for the Cisco ASR 1002-F Router.

Figure 136: DC Power Supply for the Cisco ASR 1002-F Router

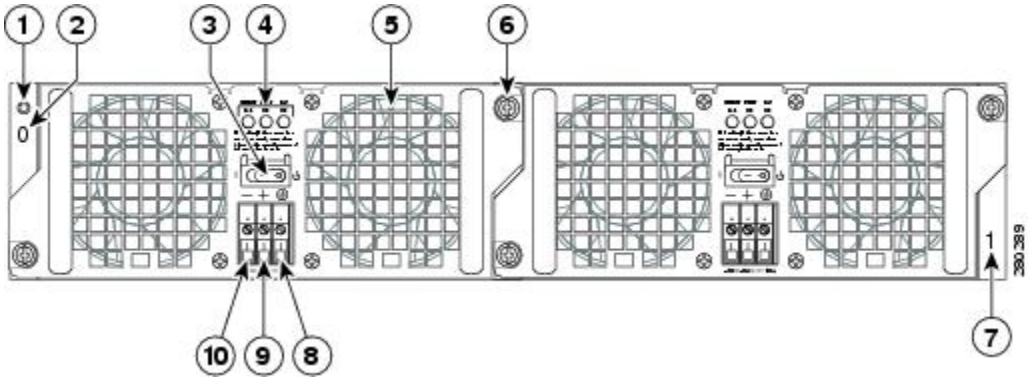

1	Chassis ESD socket	6	Captive installation screw
2	DC power supply slot 0 label	7	DC power supply slot 1 label

3	DC power supply switch Standby/On (|)	8	Ground lead
4	DC power supply LEDs	9	Positive lead
5	Fan	10	Negative lead

This section describes how to connect the DC power supply in the Cisco ASR 1002-F Router.

Note The color coding of the DC input power supply leads depends on the color coding of the DC power source at your site. Typically, green or green/yellow is used for ground. Make certain the lead color coding you choose for the DC input power supply matches the lead color coding used at the DC power source.

Warning When you install the unit, the ground connection must always be made first and disconnected last. Statement 1046

To connect the DC power supply, follow these steps:

SUMMARY STEPS

1. At the rear of the router, check that the power supply Standby switch is in the Standby position (see the following image).
2. Ensure that the negative and positive leads are disconnected from the site power source.
3. Using a wire stripper, strip approximately 0.55 inch (14 mm) from the negative, positive, and ground leads.
4. Insert the stripped end of the ground lead all the way into the ground lead receptacle on the DC input power supply, and tighten the receptacle screw using a 3.5 mm flat-blade screwdriver to a torque of 0.5 to 0.6Nm.
5. Insert the stripped end of the positive lead all the way into the positive lead receptacle and tighten the receptacle screw using the same 3.5 mm flat-blade screwdriver. Repeat this step for the negative lead.
6. After tightening the receptacle screw for the ground, positive, and negative DC-input leads, use a cable tie to secure the three leads to the power supply faceplate, as shown in Figure 137: Cisco ASR 1002-F Router DC Power Supply Terminal Block Cable Connections, on page 267. When securing the ground, positive, and negative DC-input leads to the power supply faceplate, leave a small service loop in the ground lead to ensure that the ground lead is the last lead to disconnect from the power supply if a great deal of strain is placed on all three leads.
7. Connect the ground, positive, and negative leads to the power source.
8. Turn the branch source breaker on at your site and place the DC Standby switch in the On (|) position.
9. Check that the power supply LEDs light when power is supplied to the router.

DETAILED STEPS

Step 1 At the rear of the router, check that the power supply Standby switch is in the Standby position (see the following image).

Figure 137: Cisco ASR 1002-F Router DC Power Supply Terminal Block Cable Connections

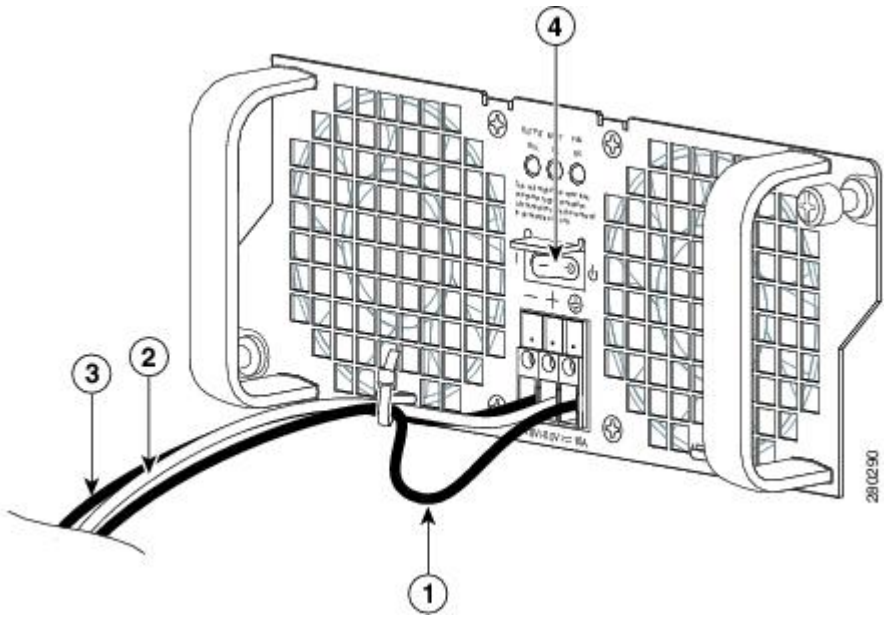

1	Ground lead with service loop and cable tie	3	Negative lead wire
2	Positive lead wire	4	DC power supply Standby switch

Step 2 Ensure that the negative and positive leads are disconnected from the site power source.

Step 3 Using a wire stripper, strip approximately 0.55 inch (14 mm) from the negative, positive, and ground leads.

Step 4 Insert the stripped end of the ground lead all the way into the ground lead receptacle on the DC input power supply, and tighten the receptacle screw using a 3.5 mm flat-blade screwdriver to a torque of 0.5 to 0.6Nm.

Step 5 Insert the stripped end of the positive lead all the way into the positive lead receptacle and tighten the receptacle screw using the same 3.5 mm flat-blade screwdriver. Repeat this step for the negative lead.

Note Make sure the entire stripped end of each lead is inserted all the way into its receptacle. If any exposed wire at the stripped end of a lead is visible after inserting the lead into its receptacle, remove the lead from the receptacle, use the wire stripper to cut the stripped end of the lead, and repeat Step 3 through Step 5.

Note Four power supplies must be installed in the chassis at all times, with a minimum of two power supplies (one per zone) connected to the mains in order to power on the system and ensure sufficient cooling. The system fans are inside the power supply units and must spin for cooling. Because all the system fans can be powered by one power supply, the second power supply unit does not have to be powered on, but must be connected.

Caution If you remove a power supply from a system that has four power supplies that are connected and powered on, the system can run only for a maximum of five minutes before shutting down. However, because the fans and power elements are independent within the power supply, the replacement power supply does not have to be energized within five minutes. The only requirement is that the power supply be installed in the chassis in order to energize the fans and maintain proper system cooling.

Step 6 After tightening the receptacle screw for the ground, positive, and negative DC-input leads, use a cable tie to secure the three leads to the power supply faceplate, as shown in Figure 137: Cisco ASR 1002-F Router DC Power Supply Terminal Block Cable Connections, on page 267. When securing the ground, positive, and negative DC-input leads to the power

supply faceplate, leave a small service loop in the ground lead to ensure that the ground lead is the last lead to disconnect from the power supply if a great deal of strain is placed on all three leads.

Step 7 Connect the ground, positive, and negative leads to the power source.

Step 8 Turn the branch source breaker on at your site and place the DC Standby switch in the On (|) position.

Step 9 Check that the power supply LEDs light when power is supplied to the router.

What to do next

This completes the procedure for connecting a DC power supply in the Cisco ASR 1002-F Router.

Connecting a Terminal to the Cisco Integrated RP Console Port and Auxiliary Port

Cisco integrated route processor has an asynchronous serial (EIA/TIA-232) RJ-45 console port labeled CON on its front panel. You can connect this port to most types of video terminals through use of the console cable kit that is included with your Cisco ASR 1002-F Router. The console cable kit contains:

- One RJ-45 to RJ-45 crossover cable
- One RJ-45 to DB-9 (female) adapter

A crossover cable reverses pin connections from one end to the other. In other words, it connects pin 1 (at one end) to pin 8 (at the other end), pin 2 to pin 7, pin 3 to pin 6, and so on. You can identify a crossover cable by comparing the two modular ends of the cable. Hold the cable ends in your hand, side-by-side, with the tabs at the back. Ensure that the wire connected to the outside (left) pin of the left plug (pin 1) is the same color as the wire connected to the outside (right) pin of the right plug (pin 8).

Use the following procedure to connect a video terminal to the console port on the integrated RP.



Note Each Cisco ASR 1000 Series route processor must have a console port connection (typically to a terminal server) if you are running a redundant configuration in the chassis.

Step 1 Connect one end of the RJ-45 cables to the serial console RJ-45 port (CON) on the Cisco integrated RP.

The following figure shows the Cisco ASR 1002-F Router integrated RP console and auxiliary port connection.

Figure 138: Cisco ASR 1002-F Router Integrated RP Console and Auxiliary Port Connection

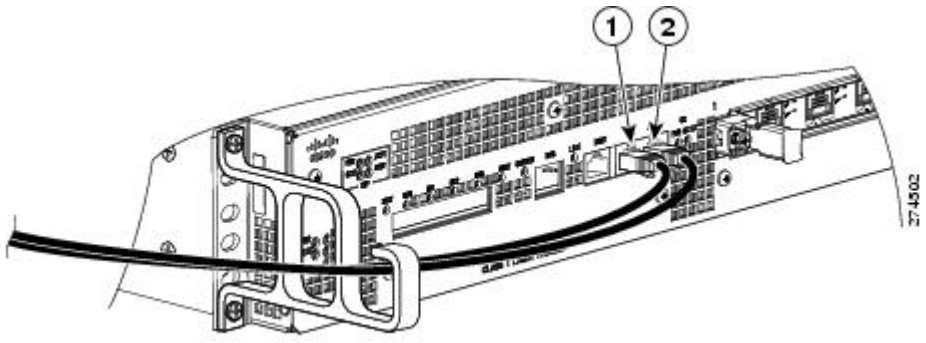

1	Console port (CON)	2	Auxiliary port (AUX)

Step 2 Run the cable up and through the cable-management bracket and connect the other end of the RJ-45 cable to the RJ-45 adapter (see the above figure).

Step 3 Connect the adapter to your video terminal to complete the cable connection.

Step 4 Power on your video terminal.

Step 5 Configure your video terminal to match the following default console port settings: 9600 baud, 8 data bits, no parity generation or checking, 1 stop bit, and no flow control

What to do next

Go to the "*Connecting Cables*" section to continue the installation.

Connecting Cables

Keep the following guidelines in mind when connecting external cables to the Cisco ASR 1002-F Router:

- To reduce the chance of interference, avoid crossing high-power lines with any interface cables.
- Verify all cabling limitations (particularly distance) before powering on the system

.

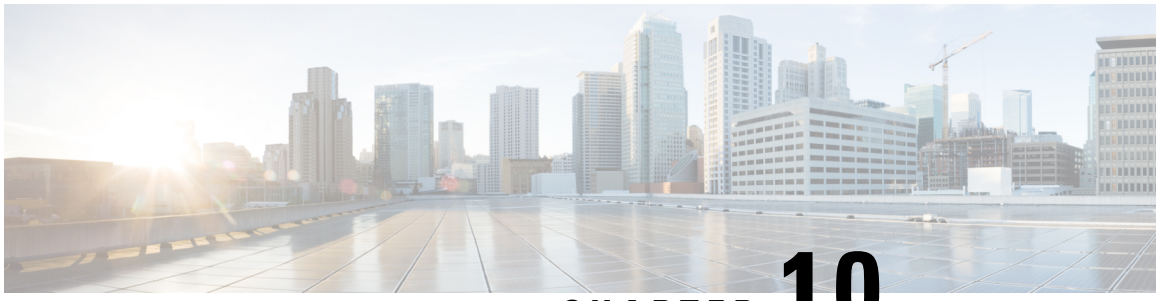

CHAPTER 10

Cisco ASR 1002-X Router Overview and Installation

This chapter describes the Cisco ASR 1002-X Router and details the procedures for installing the router on an equipment shelf, tabletop, or an equipment rack.

This chapter contains the following sections:

- Cisco ASR 1002-X Router Description, on page 271
- Installation Methods, on page 282
- General Rack Installation Guidelines, on page 282
- Guidelines for an Equipment Shelf or Tabletop Installation, on page 284
- Equipment Shelf or Tabletop Installation Procedure, on page 284
- Rack-Mounting the Cisco ASR 1002-X Router, on page 286
- Attaching the Chassis Rack Mount Brackets, on page 287
- Installing the Cisco ASR 1002-X Router in a Rack, on page 290
- Attaching the Cable Management Bracket, on page 294
- Attaching a Chassis Ground Connection, on page 296
- Connecting the SPA Cables, on page 299
- Connecting the Console and Auxiliary Port Cables, on page 299
- Cisco ASR 1002-X Router Power Supplies, on page 300
- Connecting a Terminal to the Console Port, on page 310
- Connecting External Cables to the Cisco ASR 1002-X Router, on page 311

Cisco ASR 1002-X Router Description

The Cisco ASR 1002-X Router is a part of the Cisco ASR 1000 Aggregation Services Routers. The Cisco ASR 1002-X Router is a compact, small form factor router (SSF) that fulfil customer demands such as low power consumption and decreased usage of rack space.

The Cisco ASR 1002-X Router supports three half-height SPAs and a built-in 6xGE SPA, as also all the general-purpose routing and security features of the Cisco ASR 1000 Series Aggregation Services Routers.

The Cisco ASR 1002-X Router supports:

- An integrated embedded services processor that provides a forwarding bandwidth of 5 Gbps, 10 Gbps, 20 Gbps, or 36 Gbps, depending on the Cisco software license that is installed on the router.

- Hardware-based encryption with 4 Gbps of cryptography bandwidth.
- An integrated route processor with upgradeable BootROM and 8 GB eUSB bulk storage.
- 4 GB, 8GB, or 16 GB memory. The memory unit is field replaceable. By default, the router is shipped with the 4 GB memory unit.



Note If you plan to use the software redundancy feature on the router, you must order either the 8 GB memory unit or the 16 GB memory unit.

- Two USB ports for USB flash sticks.
- 1 + 1 redundant AC or DC power supplies.
- Stratum 3 network clocking per GR-1244-CORE, with T1/E1 BITS interface, SPAs, or any of the six built-in Gigabit Ethernet ports can be used as timing sources.
- Console ports and auxiliary ports, Ethernet 10/100/1000 Mbps network management ports.
- Clocking, which includes Stratum 3/G.813 Clocking, BITS, In/Out, and GPS input/output interface as well as a ToD interface. The router supports network synchronization clock prioritization.
- Three half-height SPA slots, which can accommodate any combination of three half-height SPAs or one half-height SPA and one full-height SPA. Each SPA slot can support a throughput of up to 10 Gbps. With the exception of the 2-Port Gigabit Synchronous Ethernet SPA (SPA-2X1GE-SYNCE) and the Cisco WebEx Node SPA, all the SPAs supported by the other Cisco ASR 1000 Series Aggregation Services Routers are supported by the Cisco ASR 1002-X Router.



Note On the Cisco ASR 1002-X Router, the copper small form-factor pluggable (SFP) port's flow control is on, regardless of the duplex setting. In contrast, on the Cisco ASR 1002 Router, the copper SFP port's flow control is off when the duplex setting is Half.

- Built-in 6x1GE SPA providing six SPF-based Gigabit Ethernet connections, designated as SPA bay 0. For optical SFPs, the Gigabit Ethernet ports are SyncE capable. The Gigabit Ethernet ports are not SyncE capable for copper SFPs.

For information about the SFP transceiver modules that are compatible with the Cisco ASR 1002-X Built-in Gigabit Ethernet Ports (6x1GE), refer to the “Modular Optics Compatibility” section in the Cisco ASR 1000 Series Aggregation Services Routers SIP and SPA Hardware Installation Guide .

- An optional hard drive.

The forwarding bandwidth provided by the Cisco ASR 1002-X Router's ESP can be upgraded to 36 Gbps, depending on the Cisco software license that you install. The power supply modules of the router are field-replaceable units.

This section contains the following topics:

Front View of the Cisco ASR 1002-X Router

The following image shows the front view of the Cisco ASR 1002-X Router.

Figure 139: Cisco ASR 1002-X Router—Front View

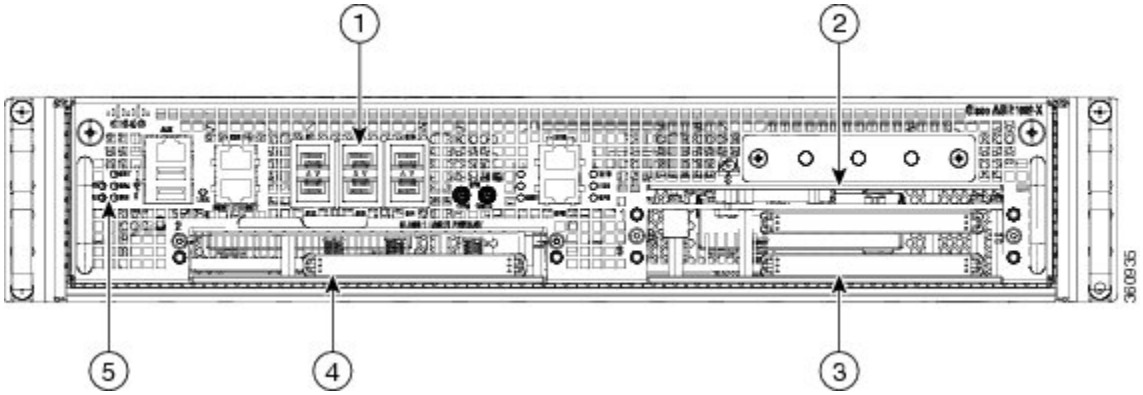

1	Built-in 6x1GE SPA in slot 0	4	SPA slot 2
2	SPA slot 1	5	ESP LEDs
3	SPA slot 3		

Note The SPAs that you insert in slots 1 to 3 are field upgradeable.

Rear View of the Cisco ASR 1002-X Router

The following image shows the Cisco ASR 1002-X Router AC power supply.

Figure 140: Cisco ASR 1002-X Router AC Power Supply

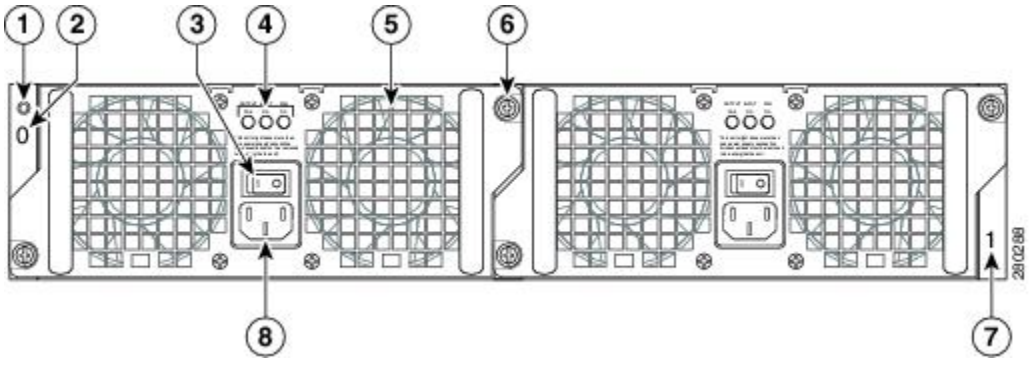

1	Chassis ESD socket	5	AC power supply fan

2	AC power supply slot number 0	6	AC power supply captive installation screw
3	AC power supply On (|)/Off (O) switch	7	AC power supply slot number 1
4	AC power supply LEDs	8	AC power inlet

The following imave shows the Cisco ASR 1002-X Router DC power supply.

Figure 141: Cisco ASR 1002-X Router DC Power Supply

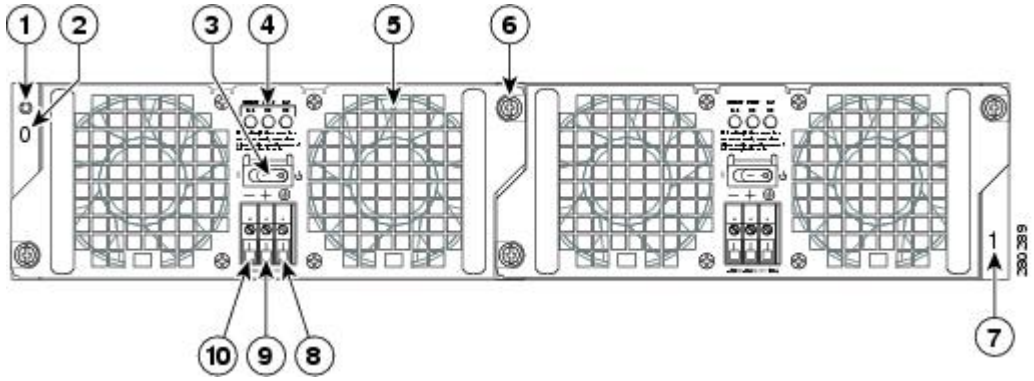

1	Chassis ESD socket	6	DC power supply captive installation screw
2	DC power supply slot 0 label	7	DC power supply slot 1 label
3	DC power supply switch Standby/On (|)	8	Ground lead
4	DC power supply LEDs	9	Positive lead
5	Power supply fan	10	Negative lead

Internal fans draw cooling air into the chassis and across internal components to maintain an acceptable operating temperature. The fans are located at the rear of the chassis. A two-hole grounding lug is located on the side of the chassis. Two power supplies, either two AC power supplies or two DC power supplies, can be accessed from the rear of the router.

Caution Use only the AC power supplies or the DC power supplies in the Cisco ASR 1002-X Router. Do not mix power supply types.

Cisco ASR 1002-X Router Slot Numbering

The Cisco ASR 1002-X Router contains an integrated SIP that supports three half-height SPAs or one half-height SPA and one full-height SPA. The SPA bays are Bay 1, Bay 2, and Bay 3. The router provides a built-in 6 Gigabit Ethernet interface, and this SPA is physically located on the integrated route processor board. The built-in 6xGE SPA ports are located in the SPA Bay 0 and addressed as GE 0/0/x.

The following image shows the Cisco ASR 1002-X Router slot numbering.

Figure 142: Cisco ASR 1002-X Router Slot Numbering

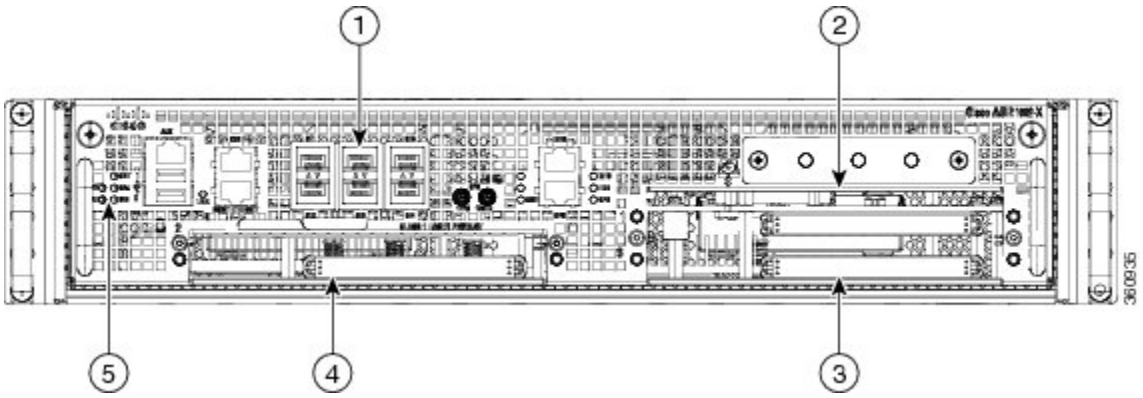

1	Built-in 6x1GE SPA in slot 0	4	SPA slot 2
2	SPA slot 1	5	ESP LEDs
3	SPA slot 3		

The Cisco ASR 1002-X Router has an integrated ESP which is not field upgradeable. Depending on the Cisco optional software license that is installed, the ESP forwarding bandwidth can be software field upgraded from the default bandwidth of 5 Gbps to 10 Gbps, 20 Gbps, or 36 Gbps. For more information about the software license, see the *Cisco ASR 1000 Series Aggregation Services Routers Release Notes* at: http://www.cisco.com/en/US/docs/routers/asr1000/release/notes/asr1k_rn_rel_notes.html

The following table describes the LEDs on the integrated ESP.

Table 71: Integrated ESP LEDs

No.	LED Label	LED	Color	Behavior in the Power-Up State
1	PWR	Power	Solid green	All the power supplies are within operational limits.
			Off	Off. The router is in standby mode.
2	ACTV	Active	Green	The ESP is green when active.
3	STAT	STATUS	Green	Code has successfully downloaded, and is operational.
			Yellow	Boot ROM has successfully loaded.
			Red	Not booted.
4	STBY	Standby	None	Will always be off.

Power Supplies in the Cisco ASR 1002-X Router

The Cisco ASR 1002-X Router power supply module supports the following Cisco power supplies:

- AC power supply operates between 85 V ac to 264 V ac
- –48 V DC power supply operates between –40.5 V dc and –72 V dc
- +24 V DC power supply operates between 21 V dc and 36 V dc

The power supplies are installed in the rear of the chassis and are hot pluggable. The Cisco ASR 1002-X Router supports up to 588 W input power from an infrastructure standpoint (cooling capacity, midplane, and power distribution), but the initial power supply development limit is up to 470 W output (AC and DC input).

AC Power Supply for the Cisco ASR 1002-X Router

The AC power supply input inlet is an International Electrotechnical Commission (IEC) connector with an AC switch. The current rating on the connector and switch is 10 A. The AC power supply is secured into the chassis with two captive screws mounted on the faceplate.

The following table describes the AC power supply LEDs on the Cisco ASR 1002-X Router.

Table 72: Cisco ASR 1002-X Router AC Power Supply LEDs

LED Label	LED	Color	Description
INPUT OK	Power supply activity	Green	The AC input voltage is greater than 85V.
		None	If the LED is not illuminated, then either the input voltage is less than 70V, or the power supply is turned off. If the AC input voltage is between 70V and 85V, the INPUT OK LED can be on, off, or flashing.
FAN OK	Power supply fan activity A bi-color LED indicates fan status.	Green	All fans are operational.
		Red	A fan failure is detected.
OUTPUT FAIL	Power supply activity	Red	If the INPUT OK LED is illuminated, this LED is red if the DC output voltages are below the minimum limit or above the maximum limit. If the INPUT OK LED is not illuminated, this LED might be off or red.

The following image shows the AC power supply for the Cisco ASR 1002-X Router.

Figure 143: AC Power Supply for the Cisco ASR 1002-X Router

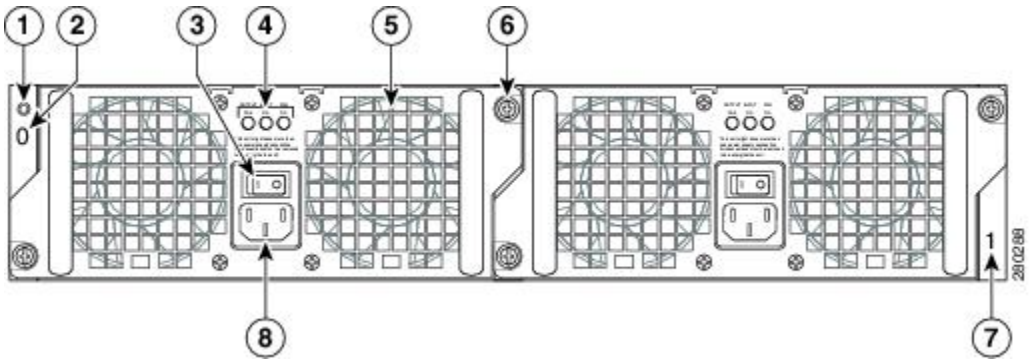

1	Chassis ESD socket	5	AC power supply fan
2	AC power supply slot number 0	6	AC power supply captive installation screw
3	AC power supply On (|) /Off (O) switch	7	AC power supply slot number 1
4	AC power supply LEDs	8	AC power supply inlet

--48 VDC Power Supply for the Cisco ASR 1002-X Router

The –48 VDC power supply input connector is a Euro-style terminal block. It is compliant with safety agencies' guidelines and electrical requirements of the supply. The DC power supply operates within specification from –40.5 VDC to –72 VDC continuously after the power supply DC input is turned on a threshold of –43.5 V is reached.

The –48 VDC power input connector accepts three wires: one positive polarity, one negative polarity, and one ground (GND) wire. There are provisions on the front panel to wire tie and strain relief the DC input wiring. The connection order is negative (–), positive (+), and GND. The DC power supply is secured into the system chassis with two captive screws mounted on the faceplate.

The following image shows the –48 VDC power supply for the Cisco ASR 1002-X Router.

Figure 144: –48 VDC Power Supply for the Cisco ASR 1002-X Router

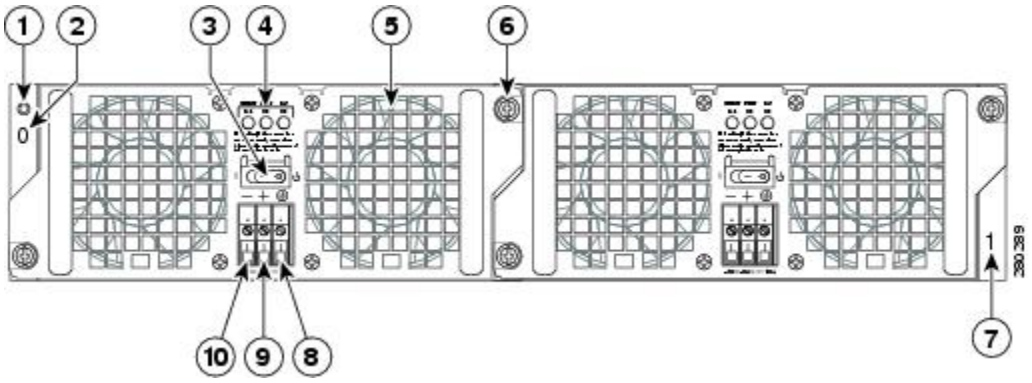

1	Chassis ESD socket	6	Power supply captive installation screw
2	Power supply slot 0 label	7	Power supply slot 1 label

3	Power supply switch Standby/On (|)	8	Ground lead
4	Power supply LEDs	9	Positive lead
5	Fan	10	Negative lead

The following table lists the Cisco ASR 1002-X Router –48 VDC power supply LEDs.

Table 73: Cisco ASR 1002-X Router –48 VDC Power Supply LEDs

LED Label	LED	Color	Description
INPUT OK	A bi-color LED indicates the presence of input voltage	Green	The LED turns green to signal that the DC power supply input voltage is greater than 43.5VDC at turn-on and remains green until the level of 39 VDC is reached.
		Amber	The LED turns amber if the power supply turns off due to low input voltage (falls below 39VDC) and indicates that a hazard (voltage on the terminal block) is still present. The LED remains amber and is active until around 20 V +/-5 V. If the input is below 15 V, the LED is not illuminated
FAN OK	A bi-color LED indicates power supply fan status	Green	The LED turns green when all fans are operational.
		Red	The LED turns red when a fan failure is detected.
OUTPUT FAIL	Power supply activity	Red	When the LED is off, it signals that the DC output voltage is within the normal operating range. Output voltage between the minimum limit and maximum limit will not create an Output Fail alarm, but output voltages below the minimum limit or above the maximum limit will create an Output Fail alarm. Led turns red to indicate that the DC output is out of the specified range. When you turn on the power supply, the LED turns red for two to three seconds to test the LED operation before going off.

The output voltage alarm is raised when the output voltage is below the low end of the minimum limit or above the high end of the maximum limit. When the output voltage is above the high end of the minimum or below the low end of the maximum limit, the red state is not activated.

The following table shows the –48 VDC power supply output voltage alarm ranges.

Table 74: –48 VDC Power Supply Output Voltage Alarm Threshold Ranges

Output	Minimum	Maximum
12 V	10.0-11.2 V	12.8-13.8 V
3.3 V	2.6-3.0 V	None

+24 VDC Power Supply for the Cisco ASR 1002-X Router

This section provides information about the +24 VDC power supply at the rear of the Cisco ASR 1002-X Router. The recommended branch circuit breaker for the Cisco ASR 1002-X Router +24 VDC power supply is a 40 A UL-listed circuit breaker.

The Cisco ASR 1002-X Router has two same-type power supplies in power supply slot 0 and power supply slot 1. The power supply slot identifiers are zero (0) on the left side of the chassis, rear side, and one (1) on the right side of the chassis, rear side. The power supply switch is a Standby switch and is not considered a disconnect.

The +24 VDC power supply uses a spring-loaded terminal block. The input terminal block requires a maximum of 8 AWG multistrand wiring to support the input current. The terminal block is compliant with safety agencies' guidelines and the electrical requirements of the supply. Use the tie wraps to dress the input cable wires; there are two tie wrap tabs on the +24 VDC power supply. The +24 VDC power supply unit is secured into the system chassis with two captive screws mounted on the faceplate.

The following image shows the +24 VDC power supply for the Cisco ASR 1002-X Router.

Figure 145: Cisco ASR 1002-X Router +24 VDC Power Supply

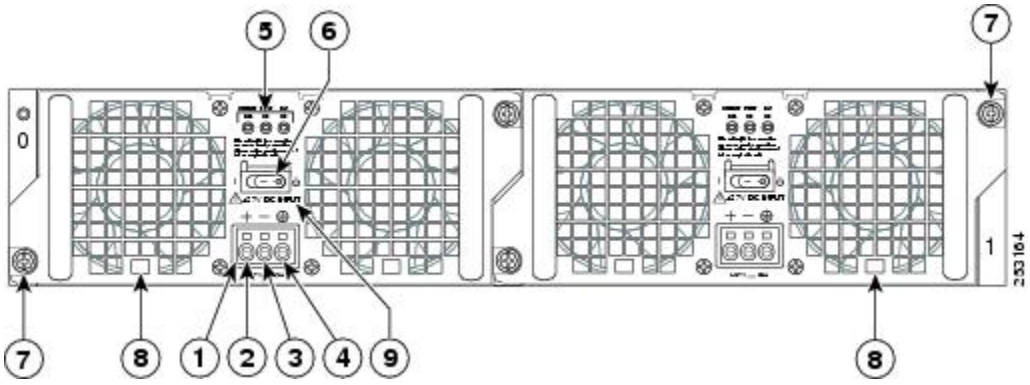

1	+24 VDC terminal block	6	Standby/On switch
2	Positive (+) lead	7	Captive fastener
3	Negative (-) lead	8	Power supply tabs
4	Ground (GND) lead	9	+27 VDC INPUT label
5	Power supply LEDs	—	—

The following table shows the definitions of the Cisco ASR 1002-X Router +24 VDC power supply LEDs.

Table 75: Cisco ASR 1002-X Router +24 VDC Power Supply LEDs

LED Label	LED	Color	Description
OUTPUT FAIL	Power supply activity	Red	When the LED is off, it signals that the +24 VDC output voltage is within the normal operating range. Output voltage between the minimum limit and maximum limit will not create an output fail alarm, but output voltages below the minimum limit or above the maximum limit will create an Output Fail alarm. When you turn the power supply on, LED turns red for two to three seconds to test the LED operation before going off.

LED Label	LED	Color	Description
INPUT OK	A bicolor LED indicates the presence of input voltage	Green	The LED turns green to signal that voltage is > or = to 20 VDC at turn-on and the voltage reduces to 19.0VDC (+/- 0.5 V tolerance).
		Amber	The LED turns to amber when the input voltage is active and is reduced to 16.0 VDC and indicates that a voltage on the terminal block is still present. The LED remains amber and is active until around 10 V. The LED should be OFF below 15.8 VDC.
FAN OK	A bicolor LED indicates the power supply fan status	Green	The LED turns to green when all fans are operational.
		Red	The LED turns to red when a fan failure is detected.

+24 VDC Power System Input for the Cisco ASR 1002-X Router

The +24 VDC power supply operates within specification between +21 VDC and +36 VDC continuously after the power supply DC input is turned on. The power supply measures the input voltage at the power supply terminals and turns off the supply when the input voltage reaches 19.0 V +/- 0.5 V when this low voltage threshold is reached, the power supply does not resume operation until the input voltage reaches 20.0 V +/- 0.5 V. When the turn-on threshold of 20 V is reached, then the +24 VDC power supply meets all specification requirements down to the low voltage threshold of 19 V (+/- tolerance).

+24 VDC Power System Output for the Cisco ASR 1002-X Router

The +24 VDC power supply output tolerance is defined in the following table, under all combinations of +24 VDC input line variation. The total system power consumption should not exceed 470 W or output rating of each power supply.

Note Two power supplies are used for the redundant operation. The system's total power consumption should not exceed the rating of one power supply to maintain redundancy.

Table 76: Cisco ASR 1002-X Router +24 VDC Power System Output Voltage and Current

Output Voltage	+12 VDC	+3.3 V
Minimum	11.80 VDC	3.20 V
Nominal	12.00 VDC	3.30 V
Maximum	12.20 VDC	3.40 V
Output Current		
Minimum	2.0 A	0.10 A

Output Voltage	+12 VDC	+3.3 V
Maximum	39 A	3.125 A

Note Any combination of output voltage and current cannot exceed the total power rating of 470 W.

The following are the important notes regarding the +24 VDC power supply in the Cisco ASR 1002-X Router:

- Output Voltage Alarm Threshold—The Output Voltage Alarm is raised when the output voltage is below the low end of the minimum limit or above the high end of the maximum limit (as shown in the following table). When the output voltage is above the high end of the minimum limit or below the low end of the maximum limit, the LED does not turn to red.

Table 77: +24 VDC Output Voltage Alarm Threshold Ranges

Output	Minimum	Maximum
12 V	10.0-11.2 V	12.8-13.8 V
3.3 V	2.6 – 3.0 V	None

- Temperature—If a fan fails, the power supply meets the functional requirements specified in above table. The calculated MTBF does not apply above 55°C with less than two fans. However, all the component stress remains within the manufacturer's specified rating.
- Thermal shutdown—The +24 VDC power supply shuts down to protect its components due to excessive internal temperature. The +24 VDC power supply then automatically restarts after the internal temperature returns to a safe operating level.

Power Cords Supported by the Cisco ASR 1002-X Router

The following table lists the power cords that are supported by the Cisco ASR 1002-X Router.

Table 78: Power Cords Supported by the Cisco ASR 1002-X Router

Power Cord Item Number	Description
CAB-AC-RA	Power Cord, 110 V, Right Angle
CAB-ACA-RA	Plug, Power Cord, Australia, 10 A, Right Angle
CAB-ACB10A-RA	Power Cord, Brazil, Right Angle, 10 A
CAB-ACB16A-RA	Power Cord, Brazil, Right Angle, 16 A
CAB-ACC-RA	Power Cord, China, Right Angle
CAB-ACE-RA	Power Cord, Europe, Right Angle

Power Cord Item Number	Description
CAB-ACI-RA	Power Cord, Italy, Right Angle
CAB-ACR-RA	Power Cord, Argentina, Right Angle
CAB-ACS-RA	Power Cord, Switzerland, Right Angle
CAB-ACU-RA	Power Cord, UK, Right Angle
CAB-IND-RA	Power Cord, India, Right Angle
CAB-JPN-RA	Power Cord, Japan, Right Angle

Installation Methods

The Cisco ASR 1002-X Router is designed for a standalone, 2-rail 19-inch rack mount (front rail only), 4-rail 19-inch rack mount (front and rear rail).

Although rack-mounting is the preferred method of installation for the Cisco ASR 1002-X Router, you can mount the chassis on an equipment shelf or tabletop.

Note The Cisco ASR 1002-X Router is usually shipped fully loaded. However, you can remove components such as the power supplies, from the chassis to make the chassis lighter for your rack installation.

Warning This warning symbol means danger. You are in a situation that could cause bodily injury. Before you work on any equipment, be aware of the hazards involved with electrical circuitry and be familiar with standard practices for preventing accidents. Use the statement number provided at the end of each warning to locate its translation in the translated safety warnings that accompanied this device. Statement 1071

Warning Before you install, operate, or service the system, read the *Regulatory Compliance and Safety Information for Cisco ASR 1000 Series Aggregation Services Routers* publication. This document provides important safety information you should know before working with the system. Statement 200

Note Proceed with the installation only after you unpack your chassis and read all the site requirements for your new equipment. Proceed with the installation.

General Rack Installation Guidelines

When planning your rack installation, consider the following guidelines:

- The Cisco ASR 1002-X Router requires a minimum of 3.5 inches (8.9 cm) rack units of vertical rack space. Measure the proposed rack location before mounting the chassis in the rack.
- Before using a particular rack, check for obstructions (such as a power strip) that could impair rack mount installation. If a power strip does impair a rack mount installation, remove the power strip before installing the chassis, and replace the strip after the chassis is installed

  .
- Allow sufficient clearance around the rack for maintenance. If the rack is mobile, you can push it back near a wall or cabinet for normal operation and pull it out for maintenance (installing or moving cards, connecting cables, or replacing or upgrading components). Otherwise, allow 19 inches (48.3 cm) of clearance space to remove field-replaceable units.
- Maintain a minimum clearance of 3 inches on the front side and back side of the chassis for the cooling air inlet and exhaust ports, respectively. Avoid placing the chassis in an overly congested rack or next to another equipment rack; otherwise, the heated exhaust air from other equipment may enter the inlet air vents and cause an overtemperature condition inside the router.



Caution To prevent the chassis from overheating, never install a Cisco ASR 1002-X Router in an enclosed room that is not properly ventilated or air conditioned.

- Always install the heavier equipment in the lower half of a rack to maintain a low center of gravity to prevent the rack from falling over.
- Install and use the cable management brackets included with the Cisco ASR 1002-X Router to keep the cables organized and out of the way of the cards and processors. Ensure that cables from other equipment already installed in the rack do not impair access to the cards or require you to disconnect cables unnecessarily to perform equipment maintenance or upgrades.
- Install rack stabilizers (if available) before you mount the chassis.
- Provide an adequate chassis ground (earth) connection for your router chassis.

In addition to the preceding guidelines, review the precautions for avoiding excessive temperature conditions described in the "Site Environmental Requirements" section on page 5-9 .

The following table provides the Cisco ASR 1002-X Router dimensions and weight information.

Table 79: Cisco ASR 1002-X Router Dimensions and Weight

Attribute	Dimensions
Depth	22.50 in. (57.15 cm)(includes card handles, cable management brackets, power supply handles).
Height	3.47 in. (8.813 cm)—2RU rack mount per EIA RS-310
Width	17.25 in. (43.815 cm)—19 inch (48.26 cm) rack mount
Weight	43.35 lbs (19.662 kg)—fully configured

Guidelines for an Equipment Shelf or Tabletop Installation

The chassis should already be in the area where you will install it. If you have not determined where to install your chassis, see the "Cisco ASR 1000 Series Routers Component Overview" section on page 2-1 for information about site considerations.

If you are not rack-mounting your Cisco ASR 1000 series chassis, place it on a sturdy equipment shelf or tabletop.

When installing the Cisco ASR 1002-X Router on an equipment shelf or tabletop, ensure that the surface is clean and that you have considered the following:

- The Cisco ASR 1002-X Router requires at least 3 inches (7.62 cm) of clearance at the inlet and exhaust vents (the front, top, and rear sides of the chassis).
- The Cisco ASR 1002-X Router should be installed off the floor. Dust that accumulates on the floor is drawn into the interior of the router by the cooling fans. Excessive dust inside the router can cause overtemperature conditions and component failures.
- There must be approximately 19 inches (48.3 cm) of clearance at the front and rear of the chassis to install and replace FRUs, or to access network cables and equipment.
- The Cisco ASR 1002-X Router needs adequate ventilation. Do not install it in an enclosed cabinet where ventilation is inadequate.
- Ensure that the cable management bracket is available if you plan to install it on the front of the chassis.
- An adequate chassis ground (earth) connection exists for your router chassis. (See the Attaching a Chassis Ground Connection, on page 296
- When handling the chassis, always follow proper lifting practices as outlined in the "Electrical Safety" section on page 5-21 .

Equipment Shelf or Tabletop Installation Procedure

To mount your Cisco ASR 1002-X Router on an equipment shelf or tabletop, follow these steps.

SUMMARY STEPS

1. Remove debris and dust, if any, from the tabletop or platform, as well as from the surrounding area.
2. Lift the chassis into position on the equipment shelf or tabletop (see following figure).
3. Attach the front rack mount brackets. Locate the threaded holes in the front sides of the chassis (first holes beyond the vent holes).
4. Align the front rack mount bracket to one side of the chassis.
5. Insert and tighten the black screws that shipped with the chassis on one side.
6. Repeat Step-2 through Step-3 on the other side of the chassis. Use all the screws to secure the rack mount brackets to the chassis.
7. Gather the two cable management brackets and screws shipped with your chassis. Attaching the Cable Management Bracket, on page 294 shows the cable management brackets attached on the front of the Cisco ASR 1002-X Router.

8. Screw the cable management bracket to each side of the rack mount brackets already attached to the chassis. Use two screws for each cable management bracket. Use the packet of four screws.
9. Verify if all the screws are securely tightened.
10. Go to the Attaching a Chassis Ground Connection, on page 296 to continue the installation.

DETAILED STEPS

Step 1 Remove debris and dust, if any, from the tabletop or platform, as well as from the surrounding area.

Step 2 Lift the chassis into position on the equipment shelf or tabletop (see following figure).

At least two people are required to lift the chassis onto a tabletop or platform. To prevent injury, keep your back straight and lift with your legs, not your back. Statement 164

Figure 146: Lifting the Chassis

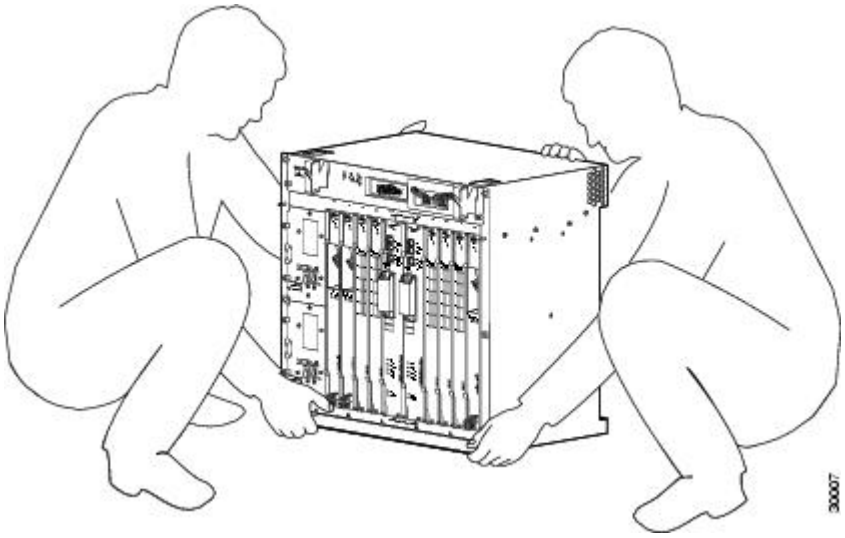

The chassis in the image does *not* represent the Cisco ASR 1002-X Router.

Step 3 Attach the front rack mount brackets. Locate the threaded holes in the front sides of the chassis (first holes beyond the vent holes).

Step 4 Align the front rack mount bracket to one side of the chassis.

Step 5 Insert and tighten the black screws that shipped with the chassis on one side.

Step 6 Repeat Step-2 through Step-3 on the other side of the chassis. Use all the screws to secure the rack mount brackets to the chassis.

Note The chassis rack mount brackets must be installed first so that you can attach the cable management brackets to the chassis rack mount brackets after the chassis is installed in the rack.

Step 7 Gather the two cable management brackets and screws shipped with your chassis. Attaching the Cable Management Bracket, on page 294 shows the cable management brackets attached on the front of the Cisco ASR 1002-X Router.

Note Ensure that the cable management U feature device has the open end pointing upwards when you attach it to the chassis

Figure 147: Attaching the Cable Management Brackets to the Cisco ASR 1002-X Router

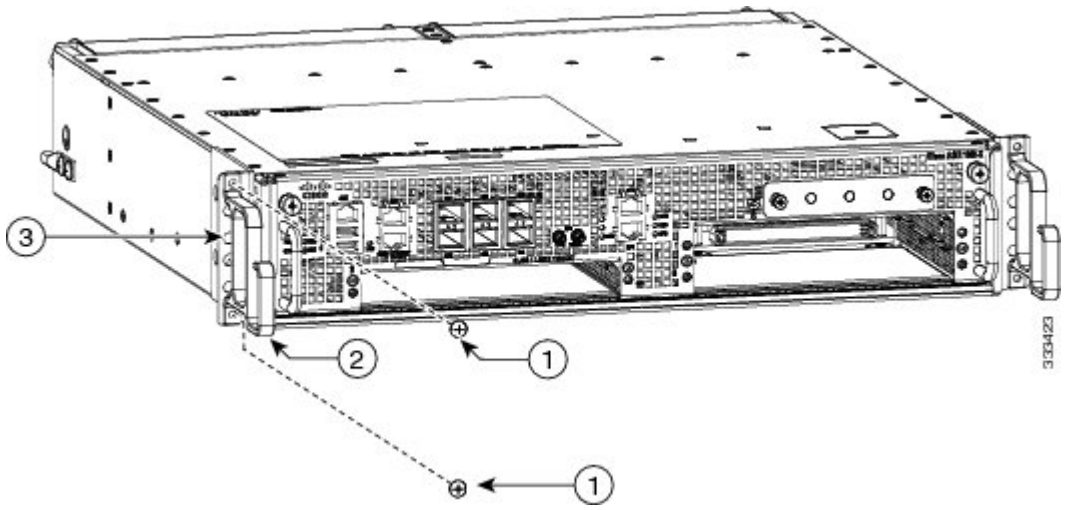

1	Cable management bracket top and bottom screw	3	Chassis front rack mount bracket
2	Cable management bracket	—	—

Step 8 Screw the cable management bracket to each side of the rack mount brackets already attached to the chassis. Use two screws for each cable management bracket. Use the packet of four screws.

Step 9 Verify if all the screws are securely tightened.

Step 10 Go to the Attaching a Chassis Ground Connection, on page 296 to continue the installation.

Rack-Mounting the Cisco ASR 1002-X Router

The Cisco ASR 1002-X Router can be installed in an existing rack with equipment or in an empty rack with no equipment. The chassis can be mounted on either of these rack types:

- Two-post rack, either 19-inch or 23-inch equipment rack. Inner clearance (the width between the inner sides of the two posts or rails) must be at least 19 inches (48.26 cm). The height of the chassis is 3.47 inches (8.8 cm). Air flow through the chassis is from front to back.
- Four-post, 19-inch equipment rack. Inner clearance (the width between the inner sides of the two posts or rails) must be at least 19 inches (48.26 cm). The height of the chassis is 3.47 inches (8.8 cm). Air flow through the chassis is from front to back.

Note When handling the chassis, always follow proper lifting practices. See the "Chassis-Lifting Guidelines" section on page 5-23 .

The Cisco ASR 1002-X Router can be installed with both front or rear rack mount brackets.

Verifying Rack Dimensions

Before you install the chassis, measure the space between the vertical mounting flanges (rails) on your equipment rack to verify that the rack conforms to the measurements shown in the following image.

SUMMARY STEPS

1. Mark and measure the distance between the holes on the left and right mounting rails.
2. Measure the space between the inner edges of the left front and right front mounting flanges on the equipment rack.

DETAILED STEPS

Step 1 Mark and measure the distance between the holes on the left and right mounting rails.

The distance should measure 18.31 inches ± 0.06 inches (46.5 cm ± 0.15 cm).

Note Measure for pairs of holes near the bottom, middle, and top of the equipment rack to ensure that the rack posts are parallel.

Step 2 Measure the space between the inner edges of the left front and right front mounting flanges on the equipment rack.

The space must be at least 17.7 inches (45 cm) to accommodate the chassis that is 17.25 inches (43.8 cm) wide and fits between the mounting posts on the rack.

Figure 148: Verifying the Equipment Rack Dimensions

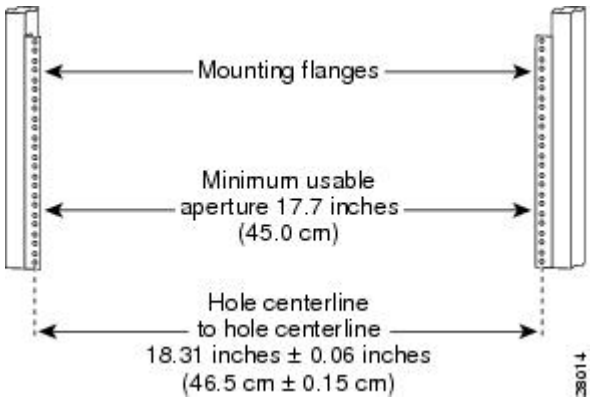

Attaching the Chassis Rack Mount Brackets

This section explains how to attach the front and rear rack mount brackets to the chassis. Before installing the chassis in the rack, you must install the rack mount brackets on each side of the chassis.

The parts and tools required for installing the rack mount brackets and cable management brackets are listed in the "Tools and Equipment" section on page 5-23 .

Note The cable management brackets are attached to the chassis after you install the chassis rack mount brackets on the chassis and mount the chassis in the rack.

Chassis Front Rack Mount Brackets

Determine where you want the chassis to be mounted in the rack. If you are mounting more than one chassis in the rack, start from the bottom up or the center of the rack. Figure 149: Attaching the Front Rack Mount Brackets to the Cisco ASR 1002-X Router, on page 288 shows the brackets attached to the chassis. Depending on the bracket holes you use, the chassis may protrude in the rack.

To install the front rack mount brackets on the Cisco ASR 1002-X Router, perform the following steps:

SUMMARY STEPS

1. Locate the threaded holes on the side of the chassis. Ensure that you hold the front rack mount bracket with the ear and holes facing outward and towards the front of the chassis.
2. Position the front rack mount bracket's top hole with the chassis, first top hole behind the side vent holes.
3. Insert and tighten the black screws shipped with the router on one side.
4. Repeat Step 1 through Step 3 on the other side of the chassis. Use the black screws to secure the rack mount brackets to the chassis.
5. Install the chassis in a rack. To install the Cisco ASR 1002-X Router in a rack, see the information provided in the Installing the Cisco ASR 1002-X Router in a Rack, on page 290.

DETAILED STEPS

Step 1 Locate the threaded holes on the side of the chassis. Ensure that you hold the front rack mount bracket with the ear and holes facing outward and towards the front of the chassis.

The following image shows where to attach the front rack mount brackets to the Cisco ASR 1002-X Router.

Figure 149: Attaching the Front Rack Mount Brackets to the Cisco ASR 1002-X Router

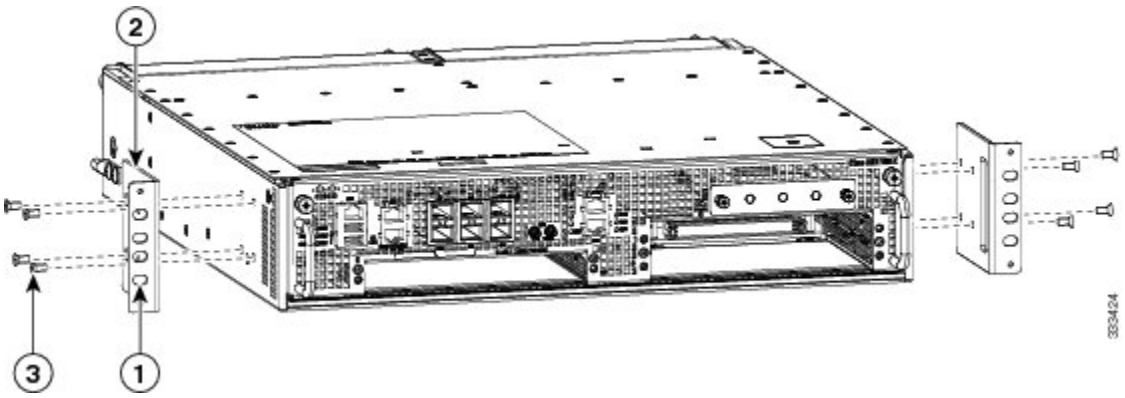

1	Front rack mount bracket ear and holes	3	Front rack mount bracket screws
2	Front rack mount bracket		—

Step 2 Position the front rack mount bracket's top hole with the chassis, first top hole behind the side vent holes.

Step 3 Insert and tighten the black screws shipped with the router on one side.

Step 4 Repeat Step 1 through Step 3 on the other side of the chassis. Use the black screws to secure the rack mount brackets to the chassis.

Step 5 Install the chassis in a rack. To install the Cisco ASR 1002-X Router in a rack, see the information provided in the Installing the Cisco ASR 1002-X Router in a Rack, on page 290.

What to do next

This completes the steps for attaching the front rack mount brackets to the Cisco ASR 1002-X Router.

Chassis Rear Rack Mount Brackets

If you are rack mounting the chassis using the rear rack mount brackets, the chassis gets recessed in the rack.

To install the rear rack mount brackets on the Cisco ASR 1002-X Router, perform the following steps:

SUMMARY STEPS

1. Locate the threaded holes on the rear side of the chassis. Ensure that you hold the rear rack mount bracket with the ear and holes facing outward and towards the rear of the chassis.
2. Position the rear rack mount bracket top hole with the chassis top hole from the back.
3. Insert and tighten the screws on one side.
4. Repeat Step 1 through Step 3 on the other side of the chassis. Use the remaining screws to secure the rear rack mount brackets to the chassis.

DETAILED STEPS

Step 1 Locate the threaded holes on the rear side of the chassis. Ensure that you hold the rear rack mount bracket with the ear and holes facing outward and towards the rear of the chassis.

The following image shows where to attach the rear rack mount brackets to the Cisco ASR 1002-X Router.

Figure 150: Attaching the Rear Rack Mount Brackets to the Cisco ASR 1002-X Router

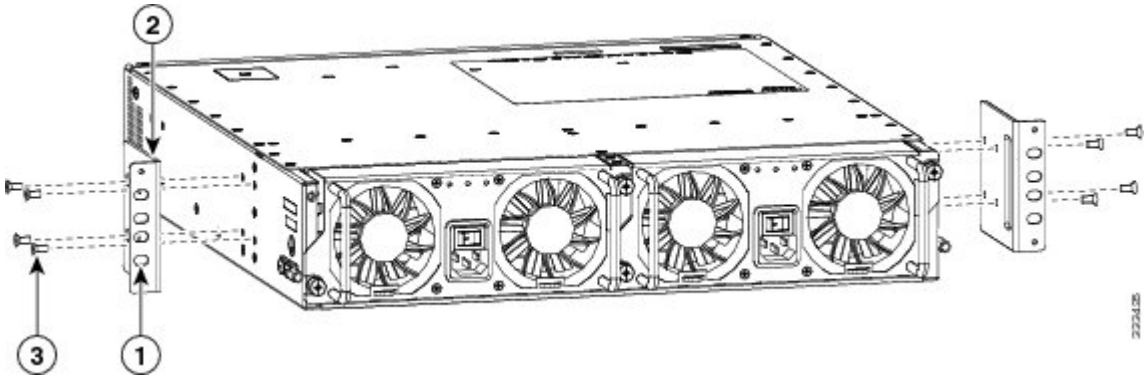

1	Rear rack mount bracket ear and holes	3	Rear rack mount bracket screws

2	Rear rack mount bracket	—	—

Step 2 Position the rear rack mount bracket top hole with the chassis top hole from the back.

Step 3 Insert and tighten the screws on one side.

Step 4 Repeat Step 1 through Step 3 on the other side of the chassis. Use the remaining screws to secure the rear rack mount brackets to the chassis.

What to do next

This completes the steps for attaching the rear rack mount brackets to the Cisco ASR 1002-X Router.

Caution To make the installation easier, before you mount the Cisco ASR 1002-X Router in a rack, use the information provided in this chapter to determine which rack mount bracket ear holes to use when positioning the chassis in the rack. Using the designated ear holes on the rack mount bracket simplifies installation of the cable management bracket.

Installing the Cisco ASR 1002-X Router in a Rack

After installing the rack mount brackets on the chassis, you mount the chassis by securing the rack mount brackets to the two posts or the mounting strips in the rack using the screws provided. Because the rack mount brackets support the weight of the entire chassis, use all the screws to fasten the two rack mount brackets to the rack posts.

Warning To prevent bodily injury when mounting or servicing this unit in a rack, you must take special precautions to ensure that the system remains stable. The following guidelines are provided to ensure your safety:-This unit should be mounted at the bottom of the rack if it is the only unit in the rack.-When mounting this unit in a partially filled rack, load the rack from the bottom to the top with the heaviest component at the bottom of the rack.-If the rack is provided with stabilizing devices, install the stabilizers before mounting or servicing the unit in the rack. Statement 1006

We recommend that you allow at least 1 or 2 inches (2.54 or 5.08 cm) of vertical clearance between the router and any equipment directly above and below it.

To install the chassis in the rack, perform the following steps:

SUMMARY STEPS

1. On the chassis, ensure that all the screw fasteners on the installed components are securely tightened.
2. Ensue that your path to the rack is unobstructed. If the rack is on wheels, ensure that the brakes are engaged or that the rack is otherwise stabilized. (See the next sections on the types of racks you can use to install the chassis.)
3. (Optional) Install a shelf in the rack to support the Cisco ASR 1002-X Router. This helps support the chassis when you secure it to the rack.
4. Lift the chassis into position between the rack posts with the help of another person.

5. Align the mounting bracket holes with the rack post holes and attach the chassis to the rack.
6. Position the chassis until the rack-mounting flanges are flush against the mounting rails on the rack.
7. Hold the chassis in position against the mounting rails in the equipment rack and perform these steps:
8. Tighten all the screws on each side to secure the chassis to the equipment rack.

DETAILED STEPS

Step 1 On the chassis, ensure that all the screw fasteners on the installed components are securely tightened.

Step 2 Ensue that your path to the rack is unobstructed. If the rack is on wheels, ensure that the brakes are engaged or that the rack is otherwise stabilized. (See the next sections on the types of racks you can use to install the chassis.)

Step 3 (Optional) Install a shelf in the rack to support the Cisco ASR 1002-X Router. This helps support the chassis when you secure it to the rack.

Step 4 Lift the chassis into position between the rack posts with the help of another person.

Step 5 Align the mounting bracket holes with the rack post holes and attach the chassis to the rack.

Note If you are using a shelf, raise the chassis to the level of the shelf. Let the bottom of the chassis rest on the brackets, but continue to support the chassis.

Step 6 Position the chassis until the rack-mounting flanges are flush against the mounting rails on the rack.

Tip To allow space to attach the cable management brackets to the chassis in the rack easily, ensure that you use the rack mount bracket ear holes mentioned in the subsequent steps.

Step 7 Hold the chassis in position against the mounting rails in the equipment rack and perform these steps:

a) Insert the bottom screw into the second hole from the bottom of the rack mount ear and use a hand-held screw driver to tighten the screw to the rack rail.

Tip To make installation easier, insert one screw at the bottom of the chassis and the next screw at the top of the chassis diagonally from the first screw.

b) Insert the top screw into the second hole from the top of the rack mount ear diagonally from the bottom screw, and tighten the screw to the rack rail.

c) Insert the four screws to secure the chassis to the rack equipment.

Tip As a result of using the specified rack mount bracket ear holes, the cable management bracket can be easily attached to the rack mount bracket when the chassis is in the rack.

Step 8 Tighten all the screws on each side to secure the chassis to the equipment rack.

Two-Post Rack Installation

The Cisco ASR 1002-X Router can be installed on a two-post 19-inch or 23-inch rack.



Note Inner clearance (the width between the inner sides of the two posts or rails) must be at least 19 inches (48.26 cm). The height of the chassis is 3.47 inches (8.8 cm). Air flow through the chassis is from front to back.

Caution If you are using a two-post rack, secure the rack to the floor surface to prevent tipping and avoid bodily injury and component damage.

Perform the following procedure to install a two-post rack:

SUMMARY STEPS

1. Position the chassis such that the front is closest to you and lift it carefully into the rack.
2. Slide the chassis into the rack, pushing it back until the brackets meet the mounting strips or posts on both sides of the rack.
3. Keeping the brackets flush against the posts or mounting strips, align the holes in the brackets with the holes on the rack or mounting strips.
4. For each bracket, insert and tighten two screws to the rack on both sides.

DETAILED STEPS

Step 1 Position the chassis such that the front is closest to you and lift it carefully into the rack.

Caution To prevent injury, avoid any sudden twists or moves.

The following image shows where to attach the rack mount brackets to the Cisco ASR 1002-X Router.

Figure 151: Attaching the Rack Mount Brackets to the Cisco ASR 1002-X Router

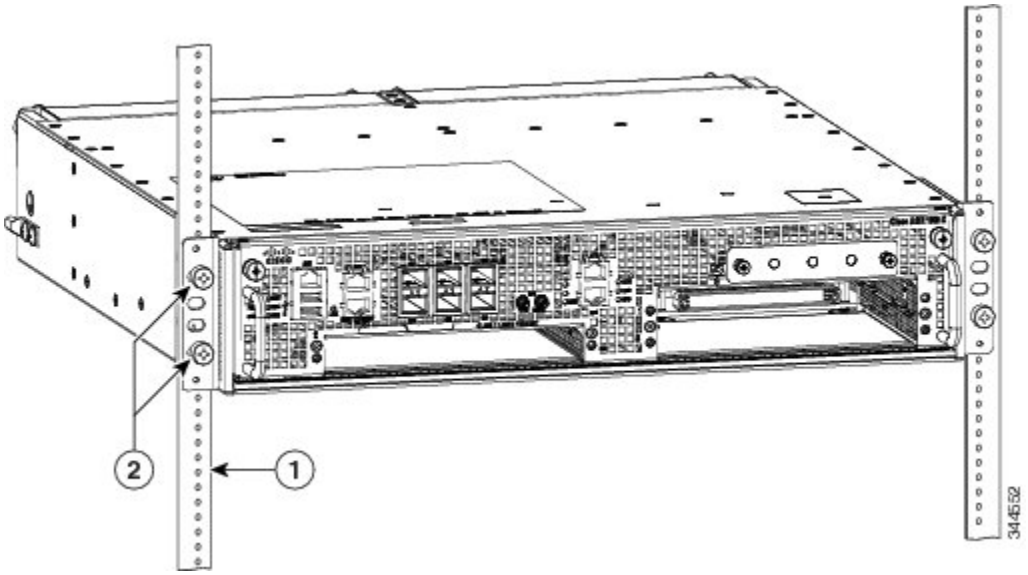

1	Rack equipment rail	2	Rack mount bracket ear and holes

Step 2 Slide the chassis into the rack, pushing it back until the brackets meet the mounting strips or posts on both sides of the rack.

Step 3 Keeping the brackets flush against the posts or mounting strips, align the holes in the brackets with the holes on the rack or mounting strips.

Step 4 For each bracket, insert and tighten two screws to the rack on both sides.

This completes the procedure for installing the chassis on a two-post rack. Proceed to the Figure 156: Attaching a Grounding Lug to the Chassis Ground Connector, on page 298 for information about how to continue with the installation.

Four-Post Rack Installation

The Cisco ASR 1002-X Router can be flush-mounted in a 19-inch equipment rack using the rack-mounting kit provided with your system. The Cisco ASR 1002-X Router can be mounted into the rack using two recommended methods:

- Installing the chassis in an existing rack with equipment.
- Installing an empty chassis in a rack with no equipment installed.

When handling the chassis, always follow proper lifting practices. See the "Chassis-Lifting Guidelines" section on page 5-23 .

Note Inner clearance (the width between the inner sides of the two posts or rails) must be at least 19 inches (48.26 cm). The height of the chassis is 3.47 inches (8.8 cm). Airflow through the chassis is from front to back.

Note Ensure that the rack is stabilized.

SUMMARY STEPS

1. (Optional) Install a shelf in the rack to support the Cisco ASR 1002-X Router. If you are using a shelf, raise the chassis to the level of the shelf. Let the bottom of the chassis rest on the brackets, but continue to support the chassis. Lift the chassis into the rack using the side handles and grasping underneath the power supply bays, with the help of another person.
2. Position the chassis until the rack-mounting flanges are flush against the mounting rails on the rack.
3. Hold the chassis in position against the mounting rails while the second person finger-tightens a screw to the rack rails on each side of the chassis.
4. Tighten all the screws on each side to secure the chassis to the equipment rack (see the following image).
5. Use a level to verify that the tops of the two brackets are level, or use a measuring tape to verify that both the brackets are the same distance from the top of the rack rails.

DETAILED STEPS

Step 1 (Optional) Install a shelf in the rack to support the Cisco ASR 1002-X Router. If you are using a shelf, raise the chassis to the level of the shelf. Let the bottom of the chassis rest on the brackets, but continue to support the chassis. Lift the chassis into the rack using the side handles and grasping underneath the power supply bays, with the help of another person.

Step 2 Position the chassis until the rack-mounting flanges are flush against the mounting rails on the rack.

Note Use the second hole up from the bottom of the rack mount bracket and the second hole down from the top of the rack mount bracket. This makes it easier to attach the cable management bracket to the chassis in the equipment rack.

Step 3 Hold the chassis in position against the mounting rails while the second person finger-tightens a screw to the rack rails on each side of the chassis.

Step 4 Tighten all the screws on each side to secure the chassis to the equipment rack (see the following image).

Figure 152: Cisco ASR 1002-X Router on a Four-Post Rack—Front and Rear Rack-Mounting

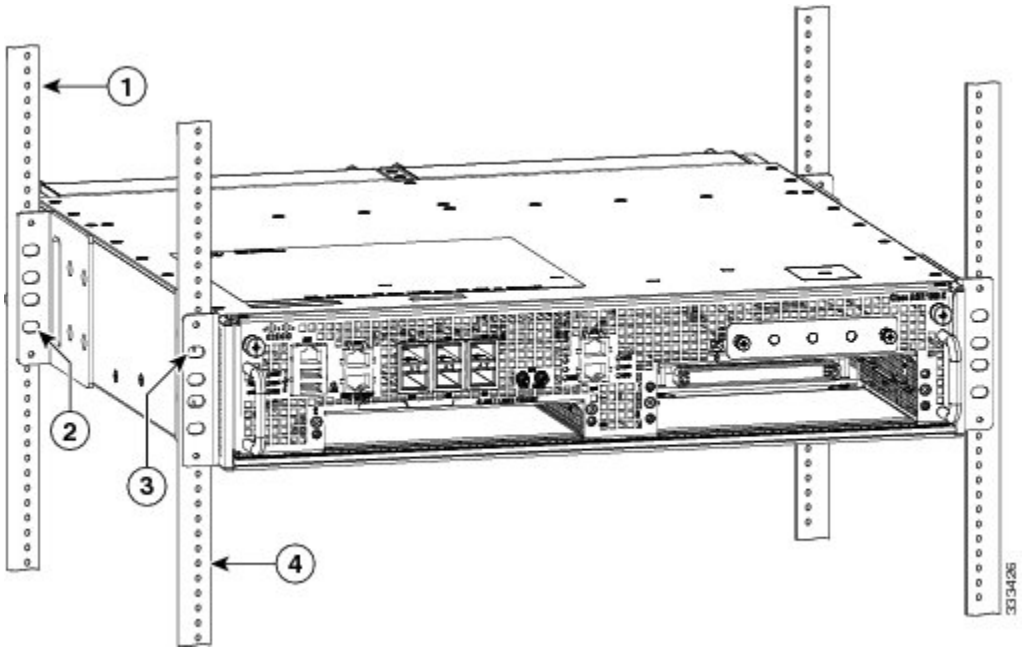

1	Rear rack equipment rail	3	Front rack mount bracket ear and holes
2	Rear rack mount bracket ear and holes	4	Front rack equipment rail

Step 5 Use a level to verify that the tops of the two brackets are level, or use a measuring tape to verify that both the brackets are the same distance from the top of the rack rails.

What to do next

This completes the procedure for installing the chassis in the rack. Proceed to the Attaching the Cable Management Bracket, on page 294 for information about how to continue with the installation.

Attaching the Cable Management Bracket

The cable management brackets are mounted to each rack mount bracket on the chassis to provide cable management to both sides of the chassis (parallel with card orientation). These brackets are screw-mounted to the rack mount brackets to allow easy installation and removal of cables.

The cable management brackets for the Cisco ASR 1002-X Router contain an independent cable management U type feature with four screws and provides cable dressing for each card module slot.

Note Ensure that the cable management bracket U type feature is facing upwards when you attach it to the chassis.

Follow these steps to attach the cable management brackets to both sides of the Cisco ASR 1002-X Router in the rack:

SUMMARY STEPS

1. Align the cable management bracket to the rack mount bracket on one side of the Cisco ASR 1002-X Router. The cable management bracket aligns to the top hole of the chassis rack mount bracket.
2. Using a Phillips screwdriver, insert the screw through cable management bracket and into the chassis rack mount and tighten the screw. Use the package of four screws shipped with the router.
3. Using the bottom rack mount ear hole, insert the screw through cable management bracket and into the chassis rack mount (see Figure 153: Chassis Rack Mount Bracket Ear Holes for the Cable Management Brackets, on page 295).

DETAILED STEPS

Step 1 Align the cable management bracket to the rack mount bracket on one side of the Cisco ASR 1002-X Router. The cable management bracket aligns to the top hole of the chassis rack mount bracket.

Step 2 Using a Phillips screwdriver, insert the screw through cable management bracket and into the chassis rack mount and tighten the screw. Use the package of four screws shipped with the router.

The following imave shows the locations at which to attach the front rack mount brackets to the Cisco ASR 1002-X Router in a rack.

Figure 153: Chassis Rack Mount Bracket Ear Holes for the Cable Management Brackets

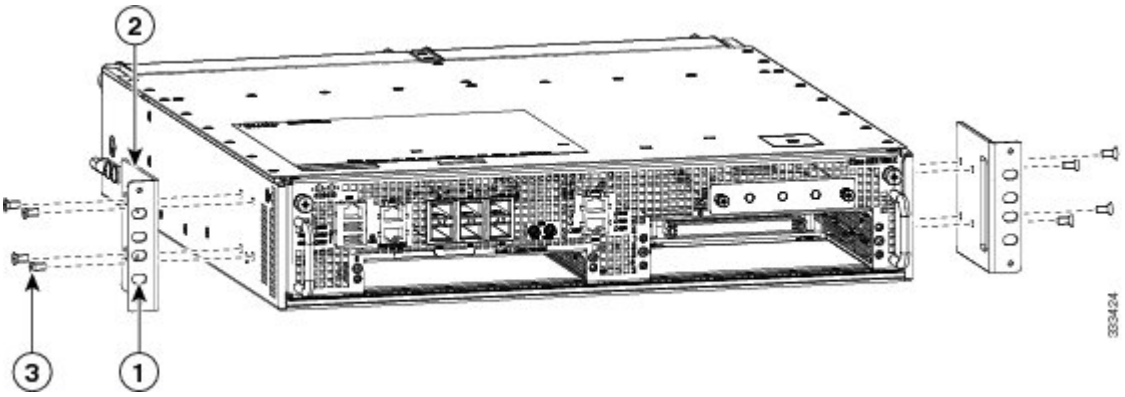

1	Secure the cable management top screw and bottom to this ear hole	3	Front rack mount bracket
2	Cable-management bracket		—

Step 3 Using the bottom rack mount ear hole, insert the screw through cable management bracket and into the chassis rack mount (see Figure 153: Chassis Rack Mount Bracket Ear Holes for the Cable Management Brackets, on page 295).

What to do next

This completes the procedure for installing the cable management brackets on the chassis.

Attaching a Chassis Ground Connection

Connecting the Cisco ASR 1002-X chassis to ground is required for all DC-powered installations and AC-powered installation where compliance with Telcordia grounding requirements is necessary.

Caution The dual-lug chassis ground stud must be installed and all the cards and filler plates must be fully inserted, screwed in, and earthed to prevent a potential hazard in a telecom line.

Have the recommended tools and supplies available before you begin this procedure.

Warning This equipment must be grounded. Never defeat the ground conductor or operate the equipment in the absence of a suitably installed ground conductor. Contact the appropriate electrical inspection authority or an electrician if you are uncertain that suitable grounding is available. Statement 1024

Before you connect power or turn on power to your chassis, you must provide an adequate chassis ground (earth) connection for the chassis. The chassis ground lug (two) and the respective screws (four) are provided in the accessory kit that shipped with your Cisco ASR 1002-X Router.

Caution The grounding wire is always the first to be installed or connected and the last to be removed or disconnected.

The following tools, equipment, and supplies are necessary to connect the system ground to the chassis:

- P

  hillips screwdriver
- Dual-lug chassis ground component (two) and respective screws (four) (shipped with the accessory kit)
- Grounding wire

The following image shows the location of the ground lug on the side of Cisco ASR 1002-X Router.

Figure 154: Cisco ASR 1002-X Router Chassis Ground Lug Location

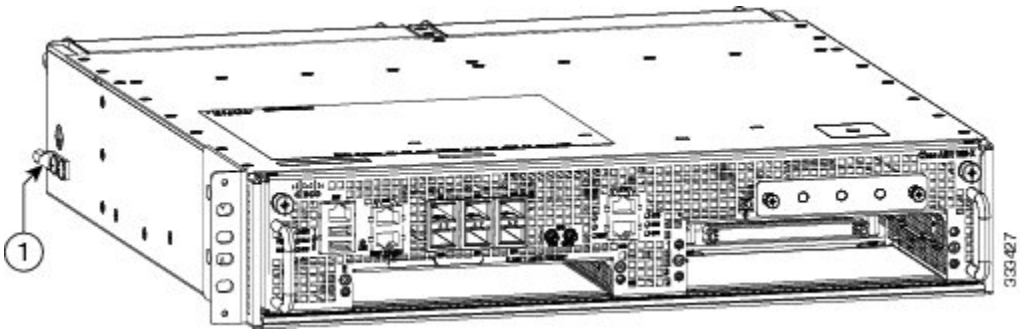

1	Cisco ASR 1002-X Router ground stud location.	—	—

To attach the grounding lug to the chassis ground connector on your chassis, follow these steps:

SUMMARY STEPS

1. Use the wire stripper to strip one end of the AWG #6 wire approximately 0.75 inches (1.905 cm).
2. Insert the AWG #6 wire into the wire receptacle in the grounding lug. Use the manufacturer's recommended crimping tool to carefully crimp the wire receptacle around the wire. This step is required to ensure proper mechanical connection.
3. Attach the grounding lug to the wire on the left to avoid having the grounding wire overlapping the power supply.
4. Locate the chassis ground connector on the side of your chassis.
5. The following image shows how to attach the grounding lug to the chassis ground connector.
6. Insert the two screws through the holes in the grounding lug.
7. Use the Number 2 Phillips screwdriver to carefully tighten the screws until the grounding lug is held firmly to the chassis. Do not overtighten the screws.
8. Connect the opposite end of the grounding wire to the appropriate grounding point at your site to ensure an adequate chassis ground.

DETAILED STEPS

Step 1 Use the wire stripper to strip one end of the AWG #6 wire approximately 0.75 inches (1.905 cm).

Step 2 Insert the AWG #6 wire into the wire receptacle in the grounding lug. Use the manufacturer's recommended crimping tool to carefully crimp the wire receptacle around the wire. This step is required to ensure proper mechanical connection.

The following image shows the parts of the grounding lug.

Figure 155: Parts of the Grounding Lug

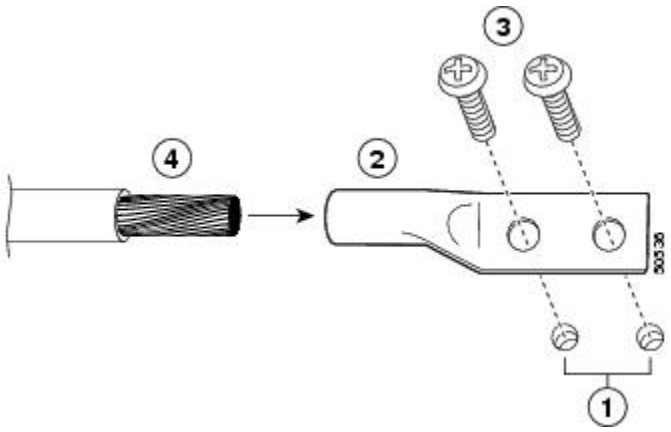

1	Chassis ground connector holes	3	Ground lug screws
2	Grounding lug	4	Ground wire

Step 3 Attach the grounding lug to the wire on the left to avoid having the grounding wire overlapping the power supply.

Step 4 Locate the chassis ground connector on the side of your chassis.

Step 5 The following image shows how to attach the grounding lug to the chassis ground connector.

Figure 156: Attaching a Grounding Lug to the Chassis Ground Connector

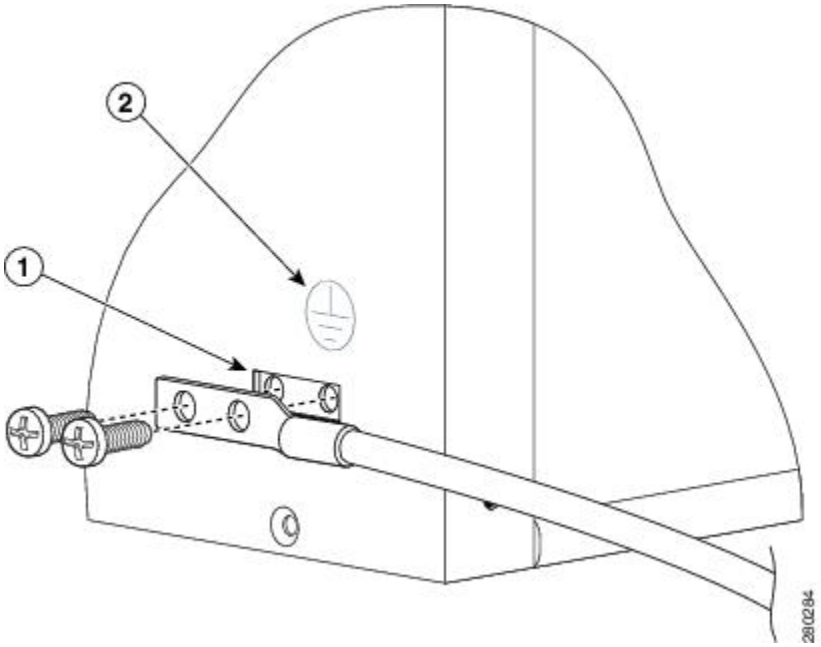

1	Chassis ground connector	2	Ground symbol

Step 6 Insert the two screws through the holes in the grounding lug.

Step 7 Use the Number 2 Phillips screwdriver to carefully tighten the screws until the grounding lug is held firmly to the chassis. Do not overtighten the screws.

Step 8 Connect the opposite end of the grounding wire to the appropriate grounding point at your site to ensure an adequate chassis ground.

What to do next

This completes the procedure for attaching a chassis ground connection. Go to the following cabling sections for information on attaching cables.

Connecting the SPA Cables

The instructions for connecting the SPA cables installed in the Cisco ASR 1002-X Router are contained in the respective configuration documents for each port adapter. For example, if you are connecting the optical fiber cables for the PA-POS-OC3 port adapter, see PA-POS-OC3 Port Adapter Installation and Configuration at :

http://www.cisco.com/en/US/partner/docs/interfaces_modules/port_adapters/install_upgrade/pos/pa-pos-oc3_install_config/paposoc3.html

Connecting the Console and Auxiliary Port Cables

This section describes how to attach a cable to the console ports or auxiliary ports on the Cisco ASR 1002-X Router. This router uses RJ-45 ports for both the auxiliary port and the console port. On the front panel of the router, the integrated route processor console port and auxiliary port are labeled CON and AUX, respectively.

Caution To meet Class A emission requirements, shielded cables must be used for the console and auxiliary port connectors.

Before using the console interface on the router via a terminal or PC, you must perform the following steps:

SUMMARY STEPS

1. Before connecting a terminal to the console port, configure the terminal to match the chassis console port as follows: 9600 baud, 8 data bits, no parity, 1 stop bits (9600 8N1).
2. Connect to the port using the RJ-45 to DB-9 cable.
3. After you establish normal router operation, disconnect the terminal, if required.

DETAILED STEPS

Step 1 Before connecting a terminal to the console port, configure the terminal to match the chassis console port as follows: 9600 baud, 8 data bits, no parity, 1 stop bits (9600 8N1).

Step 2 Connect to the port using the RJ-45 to DB-9 cable.

Note For information about how to change the default settings to meet the requirements of your terminal or host, see the Cisco IOS Terminal Services Configuration Guide .

Step 3 After you establish normal router operation, disconnect the terminal, if required.

Management Ethernet Port Cable Connection

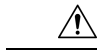

Caution To comply with Class A emission requirements, a shielded Ethernet cable must be used for the connection.

On the front panel of the router, the Management Ethernet port is labeled MGMT ETHERNET. To use the Management Ethernet interface on the router, perform the following steps:

SUMMARY STEPS

1. Insert an Ethernet RJ-45 cable into the MGMT ETHERNET port.
2. Insert the other end of the RJ-45 cable to your management device or network.

DETAILED STEPS

Step 1 Insert an Ethernet RJ-45 cable into the MGMT ETHERNET port.

Step 2 Insert the other end of the RJ-45 cable to your management device or network.

What to do next



Note A connection will not be established when setting up an out-of-band connection or modem connection in the auxiliary port and the console port.

Cisco ASR 1002-X Router Power Supplies

This section describes the Cisco ASR 1002-X Router power supplies and how to connect them:

Read the safety warnings before you begin.



Warning The covers are an integral part of the safety design of the product. Do not operate the unit without the covers installed. Statement 1077



Warning When you install the unit, the ground connection must always be made first and disconnected last. Statement 1046

Warning Before performing any of the following procedures, ensure that power is removed from the DC circuit. Statement 1003

Warning Only trained and qualified personnel should be allowed to install, replace, or service this equipment. Statement 1030

Warning Never install an AC power module and a DC power module in the same chassis. Statement 1050

Warning Installation of the equipment must comply with local and national electrical codes. Statement 1074

Warning When installing or replacing the unit, the ground connection must always be made first and disconnected last. Statement 1046

Warning This equipment must be grounded. Never defeat the ground conductor or operate the equipment in the absence of a suitably installed ground conductor. Contact the appropriate electrical inspection authority or an electrician if you are uncertain that suitable grounding is available. Statement 1024

Warning This unit has two power supply connections. All connections must be removed to de-energize the unit. Statement 1028

Warning This product relies on the building's installation for short-circuit (overcurrent) protection. Ensure that the protective device is rated not greater than: AC power supplies 20 A and DC power supplies 30 A. Statement 1005

Connecting AC Input Power to Cisco ASR 1002-X Router

This section provides the procedures for connecting AC-input, –48 VDC input power, and the +24 VDC input power to your Cisco ASR 1002-X Router.

For detailed instructions for removing and replacing the Cisco ASR 1002-X Router AC and DC power supplies, see Chapter 14, "Removing and Replacing FRUs from the Cisco ASR 1000 Series Routers."

To connect AC power to the Cisco ASR 1002-X Router, follow these steps:

SUMMARY STEPS

1. At the rear of the router, ensure that the power switch is in the Off (O) position.
2. Insert the AC power cable into the power supply AC inlet.
3. To ensure that the AC power cord does not interfere with other cables or wires, dress the AC power cable in one of the following ways.
4. Plug the AC power supply cable into the AC power source.

DETAILED STEPS

Step 1 At the rear of the router, ensure that the power switch is in the Off (O) position.

Note Turn the power switch to the On (|) position after both sides of the power cord are connected.

1	Chassis ESD socket	5	AC power supply fan
2	AC power supply slot number 0	6	AC power supply captive installation screw
3	AC power supply On (|) /Off (O) switch	7	AC power supply slot number 1
4	AC power supply LEDs	8	AC power inlet

Step 2 Insert the AC power cable into the power supply AC inlet.

Step 3 To ensure that the AC power cord does not interfere with other cables or wires, dress the AC power cable in one of the following ways.

- Leave a small service loop in the AC power cord from the inlet and then secure the power cord through the AC power supply handle.

1	AC power cord

- Take the power cord and run it below the handles of the right and left power supplies. Make sure the power cord is hanging loose so that it does not get disconnected from the AC power inlet.

Caution Do not run the AC power cord through the power supply handles .

Note Using a tie wrap for the AC power cable is optional. However, if you do attach the AC power cable to a power supply tab and then you remove the AC power cable for some reason, check for any damage to the cable after you cut the tie wrap. If the power cord is damaged, replace it immediately.

Step 4 Plug the AC power supply cable into the AC power source.

What to do next

This completes the procedure for connecting an AC power supply in the Cisco ASR 1002-X Router.

Connecting the –48 VDC Input Power to the Cisco ASR 1002-X Router

The –48 VDC power supply input connector is a Euro-style terminal block. A means to provide strain relief to the input wires is provided on the power supply. The connection order is negative (–), positive (+), and GND. However, this is the order from left to right in which the terminals appear on the power supply, not the order in which the leads should be connected during installation. The order in which the leads should be attached is GND, positive (+), and negative (-).

The recommended branch circuit breaker for the Cisco ASR 1002-X Router –48 VDC power supply is 30 A. Use an AWG #10 wire gauge on the 30 A circuit.

The following figure shows the –48 VDC power supply for the Cisco ASR 1002-X Router.

Figure 157: –48 VDC Power Supply for the Cisco ASR 1002-X Router

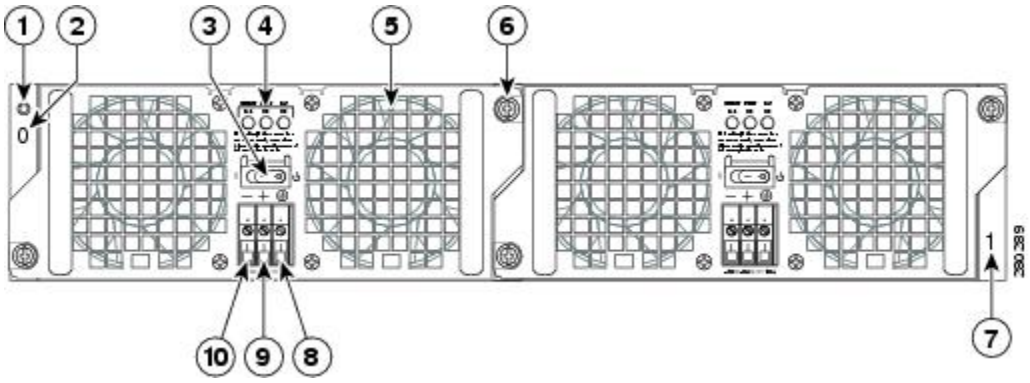

1	Chassis ESD socket	6	–48 VDC power supply captive installation screw
2	–48 VDC power supply slot 0 label	7	–48 VDC power supply slot 1 label
3	–48 VDC power supply switch Standby/On	8	Ground lead
4	–48 VDC power supply LEDs	9	Positive lead
5	Fan	10	Negative lead

The following table describes the LEDs on the Cisco ASR 1002-X Router –48 VDC power supply.

Table 80: Cisco ASR 1002-X Router –48 VDC Power Supply LEDs

LED Label	LED	Color	Description
INPUT OK	A bi-color LED indicates the presence of input voltage	Green	LED turns green to signal that the –48 VDC power supply input voltage is greater than 43.5VDC at start and remains green down to 39VDC.
		Amber	The LED turns amber if the power supply turns off due to low input voltage (falls below 39VDC) and indicates that there is still a hazard present (voltage on the terminal block). The LED remains amber and is active till around 20 V +/-5 V. The LED is not illuminated if the input is below 15 V.
FAN OK	A bi-color LED indicates power supply fan status	Green	The LED turns s green when all the fans are operational.
		Red	The LED turns red when a fan failure is detected.

LED Label	LED	Color	Description
OUTPUT FAIL	Power supply activity	Red	When the LED is off, it signals that the –48 VDC output voltage is within the normal operating range. Output voltage between the minimum and maximum limits will not create an output fail alarm, and output voltages below the minimum or above the maximum will create an output fail alarm. The Led turns red to indicate that the –48 VDC output is out of the specified range. When you turn the power supply on, the LED turns red for 2 to 3 seconds to test the LED operation before going off.

Note The color coding of the –48 VDC input power supply leads depends on the color coding of the –48 VDC power source at your site. Typically, green or green/yellow is used for ground. Ensure the lead color coding you choose for the –48 VDC input power supply matches the LED color coding used at the –48 VDC power source.

Danger When you install the unit, the ground connection must always be made first and disconnected last. Statement 1046

This section describes how to connect the –48 VDC power supply in the Cisco ASR 1002-X Router:

SUMMARY STEPS

1. At the rear of the router, check that the power supply Standby switch is in the Standby (see Figure 158: Cisco ASR 1002-X Router –48 VDC Power Supply Terminal Block Cable Connections, on page 305) position.
2. Ensure that the negative and positive leads are disconnected from the site power source.
3. Using a wire stripper, strip approximately 0.55 inch (1.39 cm) from the negative, positive, and ground lead.
4. Insert the stripped end of the ground lead all the way into the ground lead receptacle on the –48 VDC input power supply, and tighten the receptacle screw using a 3.5 mm flat-blade screwdriver to a torque of 0.5 to 0.6 Nm.
5. Insert the stripped end of the positive lead all the way into the positive lead receptacle and tighten the receptacle screw using the same 3.5mm flat-blade screwdriver.
6. Repeat this step for the negative lead.
7. After tightening the receptacle screw for the ground, positive, and negative –48 VDC-input leads, use a cable tie to secure the three leads to the power supply faceplate, as shown in Figure 158: Cisco ASR 1002-X Router –48 VDC Power Supply Terminal Block Cable Connections, on page 305. When securing the ground, positive, and negative –48 VDC-input leads to the power supply faceplate, leave a small service loop in the ground lead to ensure that the ground lead is the last lead to disconnect from the power supply if a great deal of strain is placed on all three leads, as shown in Figure 158: Cisco ASR 1002-X Router –48 VDC Power Supply Terminal Block Cable Connections, on page 305.
8. Connect the ground, positive, and negative leads to the power source.
9. Turn the branch source breaker on.

10. Place the –48 VDC Standby switch in the On (|) position. The power supply LEDs light when power is supplied to the router.

DETAILED STEPS

Step 1 At the rear of the router, check that the power supply Standby switch is in the Standby (see Figure 158: Cisco ASR 1002-X Router –48 VDC Power Supply Terminal Block Cable Connections, on page 305) position.

Figure 158: Cisco ASR 1002-X Router –48 VDC Power Supply Terminal Block Cable Connections

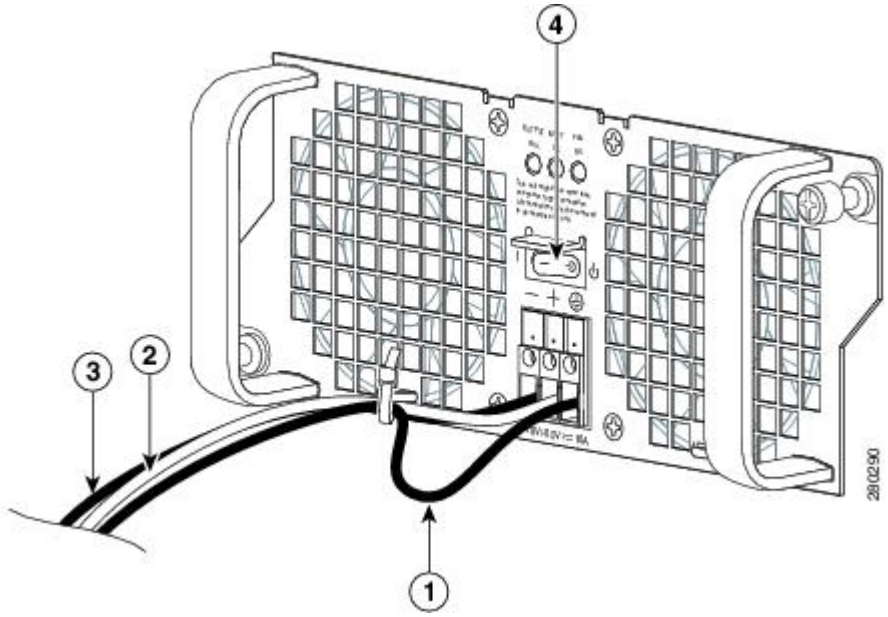

1	Ground lead with service loop and tie wrap	3	Negative lead
2	Positive lead	4	–48 VDC power supply Standby switch

Step 2 Ensure that the negative and positive leads are disconnected from the site power source.

Step 3 Using a wire stripper, strip approximately 0.55 inch (1.39 cm) from the negative, positive, and ground lead.

Step 4 Insert the stripped end of the ground lead all the way into the ground lead receptacle on the –48 VDC input power supply, and tighten the receptacle screw using a 3.5 mm flat-blade screwdriver to a torque of 0.5 to 0.6 Nm.

Step 5 Insert the stripped end of the positive lead all the way into the positive lead receptacle and tighten the receptacle screw using the same 3.5mm flat-blade screwdriver.

Step 6 Repeat this step for the negative lead.

Note Ensure the entire stripped end of each lead is inserted all the way into its receptacle. If any exposed wire at the stripped end of a lead is visible after inserting the lead into its receptacle, remove the lead from the receptacle, use the wire stripper to cut the stripped end of the lead, and repeat Step 3 through Step 6.

Step 7 After tightening the receptacle screw for the ground, positive, and negative –48 VDC-input leads, use a cable tie to secure the three leads to the power supply faceplate, as shown in Figure 158: Cisco ASR 1002-X Router –48 VDC Power Supply Terminal Block Cable Connections, on page 305. When securing the ground, positive, and negative –48 VDC-input leads to the power supply faceplate, leave a small service loop in the ground lead to ensure that the ground

lead is the last lead to disconnect from the power supply if a great deal of strain is placed on all three leads, as shown in Figure 158: Cisco ASR 1002-X Router –48 VDC Power Supply Terminal Block Cable Connections, on page 305.

Caution Ensure that the ground lead wire has a service loop before you tie wrap the lead wires to prevent the ground from being disconnected.

Step 8 Connect the ground, positive, and negative leads to the power source.

Step 9 Turn the branch source breaker on.

Step 10 Place the –48 VDC Standby switch in the On (|) position. The power supply LEDs light when power is supplied to the router.

What to do next

You have completed the procedure for connecting a –48 VDC power supply in the Cisco ASR 1002-X Router.

Connecting the +24 VDC Power Supply to the Router

The +24 VDC power supply uses a spring-loaded terminal block. The input terminal block requires 8 AWG multistrand wiring to support input current. Features are provided for strain relieving the input wires from the terminal block on the front panel. The recommended branch circuit breaker for the Cisco ASR 1002-X Router +24 VDC power supply is a 40 A UL-listed circuit breaker.

Before you begin, read these important notices about the +24 VDC power supply:

- The labeling displays +27 VDC INPUT. This labeling describes the nominal voltage provided at a cell site.
- Observe the polarity location. Unlike the polarity labels of the –48 VDC power supply (ground, positive, and negative), the polarity labels on the +24 VDC are ground, negative, and positive, as shown in Figure 159: +24 VDC Power Supply for the Cisco ASR 1002-X Router Components, on page 306 from right to left as they appear on the actual power supply unit.
- The ground (GND) lead is always installed first and removed last.
- The +24 VDC power supply uses a spring-loaded terminal block; therefore, have the recommended screwdriver size available.
- Review the diagrams to see how the wire is stripped and how the screwdriver is inserted at an angle into the terminal block.
- Have the following equipment available to install and remove the +24 VDC power supply:
  - Phoenix Contact 3.5 mm flat-blade screwdriver or equivalent
  - Wire-stripping tool for stripping 8-gauge wire

Figure 159: +24 VDC Power Supply for the Cisco ASR 1002-X Router Components, on page 306 shows the +24 VDC power supply for the Cisco ASR 1002-X Router.

Figure 159: +24 VDC Power Supply for the Cisco ASR 1002-X Router Components

1	+24 VDC terminal block	6	Standby/On switch
2	Positive (+) lead	7	Captive fastener
3	Negative (-) lead	8	Power supply tabs

4	Ground (GND) lead	9	+27 VDC INPUT label
5	Power supply LEDs	—	—

Note Color coding of the +24 VDC input power supply leads depends on the color coding of the +24 VDC power source at your site. Typically, green or green/yellow is used for ground. Ensure the lead color coding you choose for the +24 VDC input power supply matches the lead color coding used at the +24 VDC power source. The most commonly used wire color-coding is red for the positive (+) lead and black for the negative (–) lead.

Danger When you install the unit, the ground connection must always be made first and disconnected last. Statement 1046

To connect the +24 VDC power supply in the Cisco ASR 1002-X Router, follow these steps:

SUMMARY STEPS

1. At the rear of the router, ensure that the power Standby switch is in the Standby position.
2. Ensure that the positive and negative leads are disconnected from the site power source and the source circuit breaker is turned off.
3. Using a wire stripper, strip the recommended amount of wire insulation, which is 1.5 cm (0.6 inch) from the negative, positive, and ground leads.
4. Using a 3.5mm screwdriver, insert the screwdriver at an angle to release the spring while you install the stripped lead wire as shown in Figure 161: Inserting a Screwdriver Into the +24 VDC Power Supply Terminal Block, on page 308.
5. Carefully push the screwdriver at a forward angle until you relieve the spring contact.
6. With the screwdriver still inserted, gently push the lead wire (ground lead first) in until the copper wire, as shown in Figure 162: Cisco ASR 1002-X Router +24 VDC Power Supply Lead Wire Inserted into Terminal Block, on page 308, is no longer visible (see Figure 163: Cisco ASR 1002-X Router +24 VDC Power Supply Lead Wire Fully Inserted, on page 308).
7. After the lead wire is fully inserted, perform these steps:
8. Repeat Steps 5 through Step 10 for each lead wire.
9. After inserting the ground wire, leave an extra service loop in the ground lead, as shown in Figure 166: Cisco +24 VDC Power Supply Terminal Block Ground Lead Service Loop, on page 309 to ensure that the ground lead is the last lead to disconnect from the power supply if a great deal of strain is placed on all three leads.
10. After tightening the receptacle screw for the ground, and leaving the extra service loop in the ground lead, use a cable tie to secure the three leads to the power supply faceplate tie-wrap tab, as shown in Figure 166: Cisco +24 VDC Power Supply Terminal Block Ground Lead Service Loop, on page 309, item 5.
11. Turn on the branch source breaker.
12. Move the power supply Standby switch to the On (|) position. The power supply LEDs light when power is supplied to the router.

DETAILED STEPS

Step 1 At the rear of the router, ensure that the power Standby switch is in the Standby position.

Step 2 Ensure that the positive and negative leads are disconnected from the site power source and the source circuit breaker is turned off.

Step 3 Using a wire stripper, strip the recommended amount of wire insulation, which is 1.5 cm (0.6 inch) from the negative, positive, and ground leads.

Note The stripping length is common to all types of wire used.

Figure 160: Stripping Wire for the +24 VDC Terminal Block, on page 308 shows the wire strip and lead.

Figure 160: Stripping Wire for the +24 VDC Terminal Block

1	Lead wire stripping area	—	—

Danger Remove the covering from exactly the specified length of each wire. If you strip too much of the covering, exposed wire protruding from the terminal block will create an electrical hazard. If you strip too little of the covering, the wire might not make a good contact with the terminal, or it might not be held securely in place in the terminal.

Step 4 Using a 3.5mm screwdriver, insert the screwdriver at an angle to release the spring while you install the stripped lead wire as shown in Figure 161: Inserting a Screwdriver Into the +24 VDC Power Supply Terminal Block, on page 308.

Figure 161: Inserting a Screwdriver Into the +24 VDC Power Supply Terminal Block

Step 5 Carefully push the screwdriver at a forward angle until you relieve the spring contact.

Step 6 With the screwdriver still inserted, gently push the lead wire (ground lead first) in until the copper wire, as shown in Figure 162: Cisco ASR 1002-X Router +24 VDC Power Supply Lead Wire Inserted into Terminal Block, on page 308, is no longer visible (see Figure 163: Cisco ASR 1002-X Router +24 VDC Power Supply Lead Wire Fully Inserted, on page 308).

Caution Ensure that no copper portion of the lead wire is exposed. Only the wire insulation should visible.

Caution Do not install wire into a terminal block that has not had its insulation removed.

Figure 162: Cisco ASR 1002-X Router +24 VDC Power Supply Lead Wire Inserted into Terminal Block

1	Lead wire insulation	2	Copper wire

Figure 163: Cisco ASR 1002-X Router +24 VDC Power Supply Lead Wire Fully Inserted, on page 308 shows the lead wire fully inserted.

Figure 163: Cisco ASR 1002-X Router +24 VDC Power Supply Lead Wire Fully Inserted

1	Fully-inserted lead wire	—	—

Step 7 After the lead wire is fully inserted, perform these steps:

a) Hold the lead wire in place while you remove the screwdriver.

b) After the screwdriver is completely removed, gently tug the lead wire to ensure that it is securely installed.

Figure 164: Removing a Screwdriver from the +24 VDC Power Supply Terminal Block, on page 309 shows a lead wire that is fully inserted, and the screwdriver being removed while you gently tug the lead wire.

Figure 164: Removing a Screwdriver from the +24 VDC Power Supply Terminal Block

1	Gently tug the lead wire.	—	—

Step 8 Repeat Steps 5 through Step 10 for each lead wire.

Figure 165: Cisco +24 VDC Power Supply Terminal Block with Lead Wires Installed, on page 309 shows all the lead wires installed.

Figure 165: Cisco +24 VDC Power Supply Terminal Block with Lead Wires Installed

1	Positive lead wire	3	Ground lead wire
2	Negative lead wire	—	—

Note Ensure that the stripped end of each lead wire is twisted tightly together. This makes insertion easier. Also ensure that the entire lead wire is inserted all the way into its receptacle. If exposed wire is visible at the stripped end of a lead after inserting the lead into its receptacle, remove the lead from the receptacle, use the wire stripper to cut the stripped end of the lead, and then reinsert.

Step 9 After inserting the ground wire, leave an extra service loop in the ground lead, as shown in Figure 166: Cisco +24 VDC Power Supply Terminal Block Ground Lead Service Loop, on page 309 to ensure that the ground lead is the last lead to disconnect from the power supply if a great deal of strain is placed on all three leads.

Figure 166: Cisco +24 VDC Power Supply Terminal Block Ground Lead Service Loop

1	Ground lead wire with service loop	4	+24 VDC power supply Standby switch
2	Negative lead wire	5	Power supply tabs
3	Positive lead wire	—	—

Step 10 After tightening the receptacle screw for the ground, and leaving the extra service loop in the ground lead, use a cable tie to secure the three leads to the power supply faceplate tie-wrap tab, as shown in Figure 166: Cisco +24 VDC Power Supply Terminal Block Ground Lead Service Loop, on page 309, item 5.

Step 11 Turn on the branch source breaker.

Step 12 Move the power supply Standby switch to the On (|) position. The power supply LEDs light when power is supplied to the router.

What to do next

This completes the steps for installing the +24 VDC power supply in the Cisco ASR 1002-X Router.

Connecting a Terminal to the Console Port

The integrated route processor has an asynchronous serial (EIA/TIA-232) RJ-45 console port labeled CON on its front panel. You can connect this port to most types of video terminals using the console cable kit that is included with your Cisco ASR 1002-X Router. The console cable kit contains:

- One RJ-45-to-RJ-45 crossover cable
- One RJ-45-to-DB-9 (female) adapter

A crossover cable reverses pin connections from one end to the other. In other words, it connects pin 1 (at one end) to pin 8 (at the other end), pin 2 to pin 7, pin 3 to pin 6, and so on. You can identify a crossover cable by comparing the two modular ends of the cable. Hold the cable ends in your hand, side-by-side, with the tabs at the back. Ensure that the wire connected to the outside (left) pin of the left plug (pin 1) is the same color as the wire connected to the outside (right) pin of the right plug (pin 8).

Use the following procedure to connect a video terminal to the console port on a route processor.

Note Each Cisco ASR 1000 Series Route Processor 1 must have a console port connection (typically to a terminal server) if you are running a redundant configuration in the chassis.

Perform the following procedure to connect a terminal to a console port:

SUMMARY STEPS

1. Connect one end of the RJ-45 cable to the serial RJ-45 port (CON) on the front panel (see the following image).
2. Run the cable up and through the cable management bracket and connect the other end of the RJ-45 cable to the RJ-45 adapter (see Figure 167: Cisco ASR 1002-X Router Console Port Connection on the Route Processor, on page 311).
3. Connect the adapter to your video terminal to complete the cable connection.
4. Power on your video terminal.
5. Configure your video terminal to match the following default console port settings:
6. Continue with the installation by referring to the procedure described in the Connecting External Cables to the Cisco ASR 1002-X Router, on page 311.

DETAILED STEPS

Step 1 Connect one end of the RJ-45 cable to the serial RJ-45 port (CON) on the front panel (see the following image).

Figure 167: Cisco ASR 1002-X Router Console Port Connection on the Route Processor

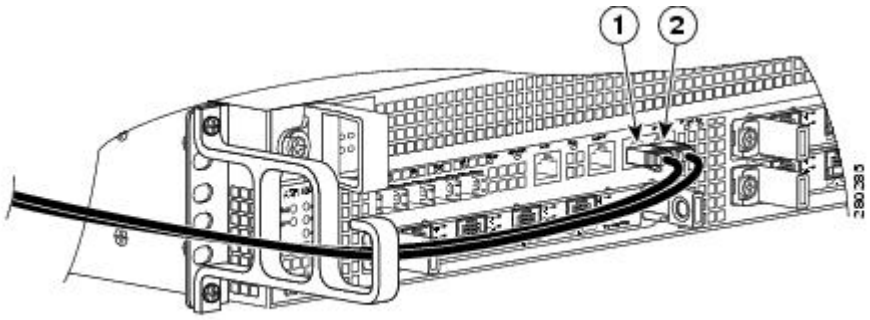

1	CON port connection	2	AUX port connection

Step 2 Run the cable up and through the cable management bracket and connect the other end of the RJ-45 cable to the RJ-45 adapter (see Figure 167: Cisco ASR 1002-X Router Console Port Connection on the Route Processor, on page 311).

Step 3 Connect the adapter to your video terminal to complete the cable connection.

Step 4 Power on your video terminal.

Step 5 Configure your video terminal to match the following default console port settings:

- 9600 baud
- 8 data bits
- No parity generation or checking
- 1 stop bit
- No flow control

Step 6 Continue with the installation by referring to the procedure described in the Connecting External Cables to the Cisco ASR 1002-X Router, on page 311.

Connecting External Cables to the Cisco ASR 1002-X Router

Keep the following guidelines in mind when connecting external cables to the Cisco ASR 1002-X Router:

- To reduce the chance of interference, avoid crossing high-power lines with any interface cables.
- Verify all the cabling limitations (particularly, distance) before powering on the system.

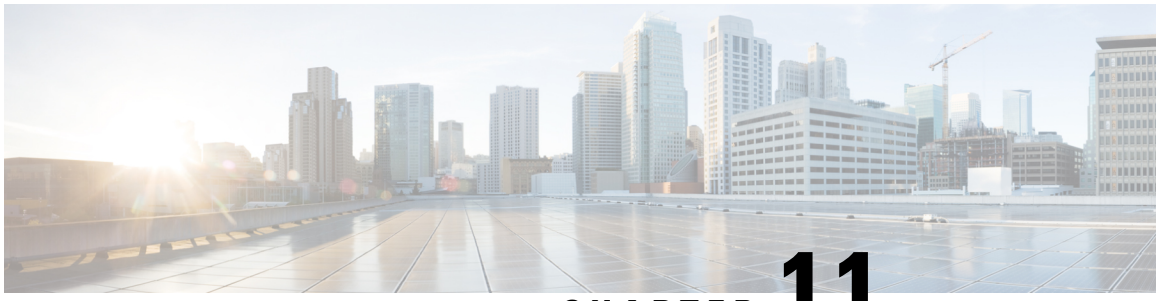

CHAPTER 11

Cisco ASR 1013 Router Overview and Installation

This chapter describes the Cisco ASR 1013 Router and provides the procedures for installing the Cisco ASR 1013 Router in equipment racks and hardware upgrade process.

This chapter contains the following sections:

- Cisco ASR 1013 Router Description, on page 313
- Installation Methods, on page 319
- General Rack Installation Guidelines, on page 320
- Guidelines for Equipment Rack Installation, on page 321
- Attaching the Rear Rack-Mount Brackets, on page 322
- Rack-Mounting the Cisco ASR 1013 Router, on page 324
- Attaching the Cable-Management Bracket, on page 333
- Attaching a Chassis Ground Connection, on page 335
- Connecting the Shared Port Adapter Cables, on page 337
- Connecting the Console and Auxiliary Port Cables, on page 337
- Connecting Power to the Cisco ASR 1013 Router, on page 339
- Connecting a Terminal to the Cisco ASR 1000 Series RP Console Port, on page 348
- Connecting the System Cables, on page 349
- Attaching Cable Retention Bracket on AC Power Supply, on page 350

Cisco ASR 1013 Router Description

Note ASR1000-MIP100 is supported only in slot 2 and 3 of Cisco ASR 1013

The Cisco ASR 1013 Router supports full-width card modules. It is designed with a single midplane with connectors on one interface midplane. The Cisco ASR 1013 Router supports:

- Up to 6 ASR1000-SIP40G shared port adapter modules
- Up to 24 shared port adapters (SPAs) and up to six SIPs
- Two embedded services processors (Cisco ASR1000-ESP40, Cisco ASR1000-ESP100, or Cisco ASR1000-ESP200)
- Cisco ASR1000-RP2 route processor

- Quad power supplies (redundant pairs) by default; option of either AC or DC power supplies and two power supply zones. There are two power supplies for power zone 0 and two power supplies for power zone 1 (do not mix AC and DC power supplies).

Note You must have one power supply running at all times from each power supply zone and two power supplies from each power supply zone to support redundancy. For detailed power supply information about the Cisco ASR 1013 Router, see the Connecting Power to the Cisco ASR 1013 Router, on page 339.

Front View

The following image shows the Cisco ASR 1013 Router with modules and filler plates installed.

Figure 168: Cisco ASR 1013 Router—Front View

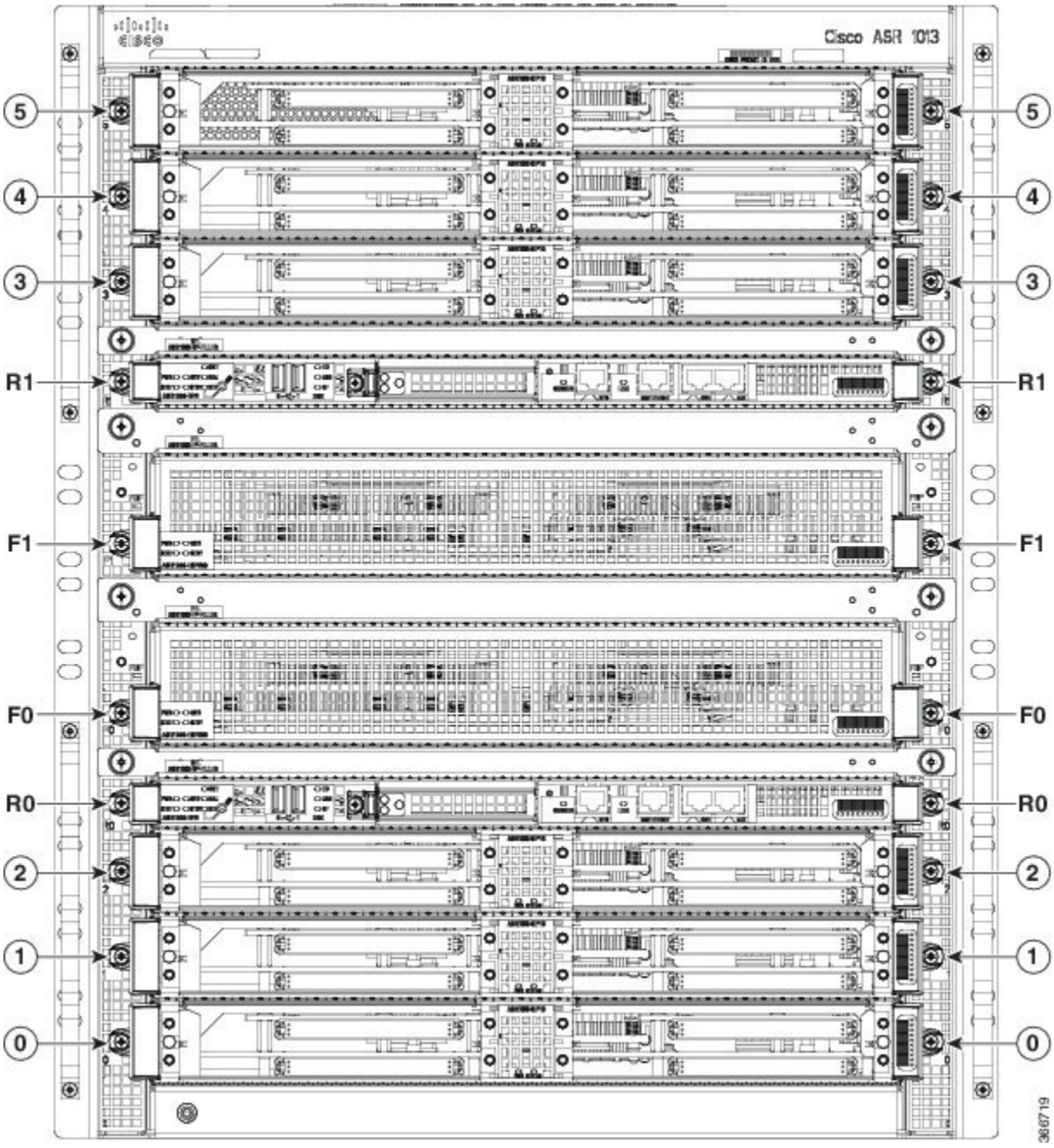

1	ASR 1000 Series SIP slot 0	6	ASR 1000 Series SIP slot 5
2	ASR 1000 Series SIP slot 1	R0	Slot R0 with ASR 1000- RP2
3	ASR 1000 Series SIP slot 2	F0	Slot F0 with Cisco ASR 1000-ESP40, Cisco ASR 1000-ESP100, or Cisco ASR 1000-ESP200

4	ASR 1000 Series SIP slot 3	F1	Slot F1 with Cisco ASR 1000-ESP40, Cisco ASR 1000-ESP100, or Cisco ASR 1000-ESP200
5	ASR 1000 Series SIP slot 4	R1	Slot R1 with ASR 1000-RP2
Note: Slots 10, 9, 8, 7, and 6 reside in power zone 0 and slots 5, 4, 3, 2, and 1 reside in power zone 1.			

Rear View

The following image shows the rear of the Cisco ASR 1013 Router with the AC power supplies installed.

Figure 169: Cisco ASR 1013 Router—Rear View

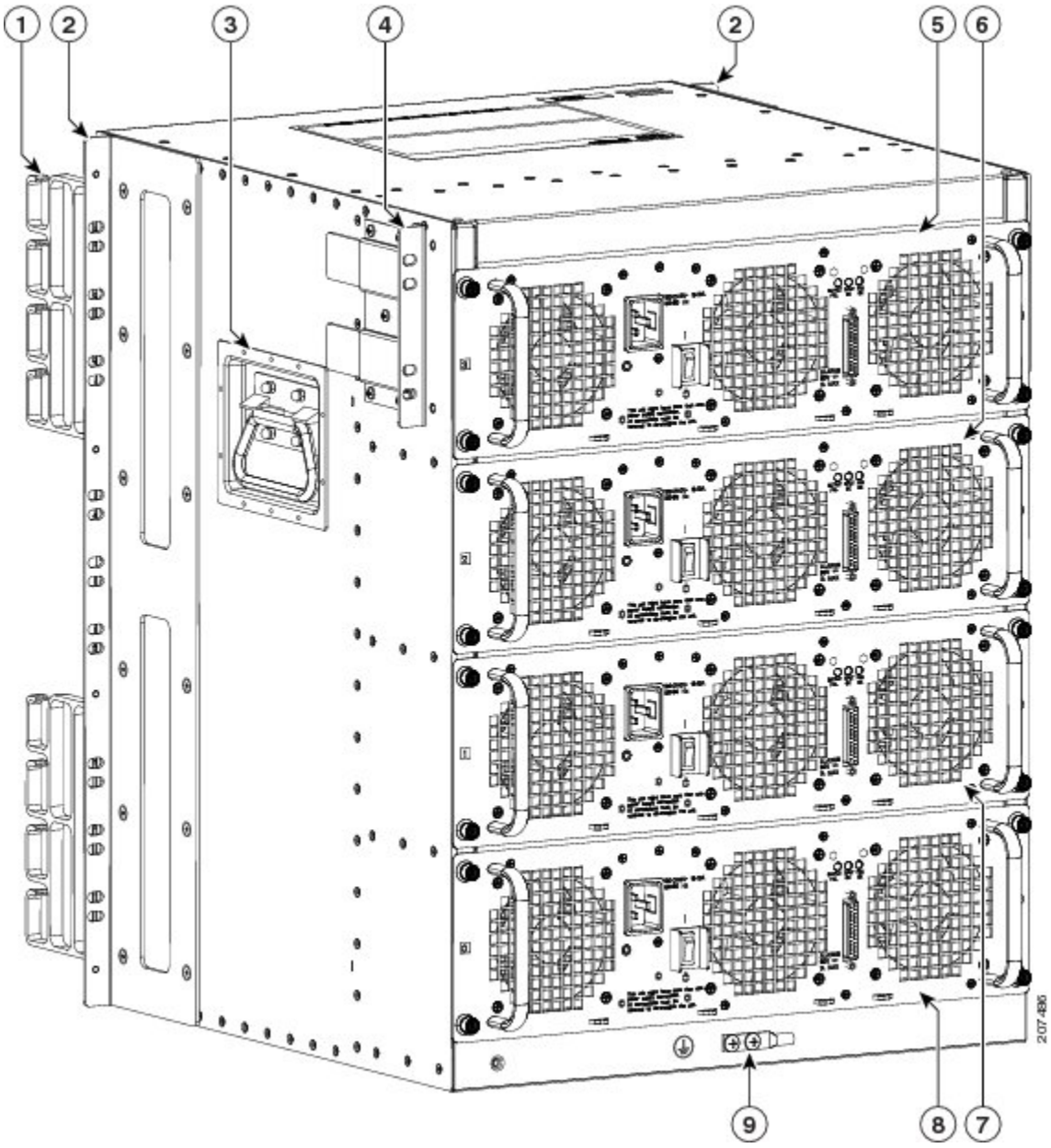

1	Cable-management brackets	6	AC power supply in slot 2 (power supply zone 1)
2	Forward rack-mount ears are shipped installed	7	AC power supply in slot 1 (power supply zone 0)
3	Chassis handle	8	AC power supply in slot 0 (power supply zone 0)
4	Rear rack-mount brackets	9	Chassis ground stud
5	AC power supply in slot 3 (power supply zone 1)	—	—

Cisco ASR 1013 Router Power Zones

Internal fans draw cooling air into the chassis and across internal components to maintain an acceptable operating temperature. (See the preceding figure.) The fans are built into the power supply allowing fan and power supply replacement. A two-hole grounding lug is located on the bottom rear of the chassis (see the preceding figure, callout 6). Four power supplies, either AC power supplies or DC power supplies, are accessed from the rear of the router. The power supply bays are numbered from bottom to top: 0, 1, 2, and 3 respectively.

The Cisco ASR 1013 Router has two power zones:

- Power zone 1(top half of chassis) includes slots:
  - PS1-A
  - PS1-B
  - Carrier card slots 3, 4, and 5
  - RP1
  - FP1
- Power zone 0 (bottom half of chassis) includes slots:
  - PS0-A
  - PS0-B
  - Carrier card slots 0, 1, and 2
  - RP0
  - FP0

Note Do not combine AC and DC power supplies in the same chassis.

Note Cisco ASR 1013 Router supports only Cisco ASR1000-RP2.

Warning This warning symbol means danger. You are in a situation that could cause bodily injury. Before you work on any equipment, be aware of the hazards involved with electrical circuitry and be familiar with standard practices for preventing accidents. Use the statement number provided at the end of each warning to locate its translation in the translated safety warnings that accompanied this device. Statement 1071

Warning Before you install, operate, or service the system, read the *Regulatory Compliance and Safety Information for Cisco ASR 1000 Series Aggregation Services Routers* publication. This document provides important safety information you should know before working with the system. Statement 200

Note You have already unpacked your chassis and read all the site requirements for your new equipment. Proceed with the installation.

Cisco ASR 1013 Router Slot Numbering

The Cisco ASR 1013 chassis has two Cisco ASR100-RP2 (R0, R1) slots, two embedded services processor slots (F0, F1) and six dedicated Cisco ASR1000-SIP slots (from bottom of chassis up, 0, 1, 2, 3, 4, 5 respectively).

The Cisco ASR 1013 Router is designed with each slot numbered as shown in the "Cisco ASR 1013 Router—Rear View" figure in the *Rear View* section.

Note Cisco ASR 1013 slots are keyed using rotated guide pins for the plug-in card to be fully inserted in slots where they are intended to operate. This keyed feature prevents cards from being inserted into the wrong slots.

The Cisco ASR 1013 Router contains six SPA Interface Processor (SIPs) slots and supports four subslots for the installation of SPAs. The following shows the Cisco ASR 1013 Router SPA subslot location.

Figure 170: Cisco ASR 1013 Router—ASR1000-SIP Subslots

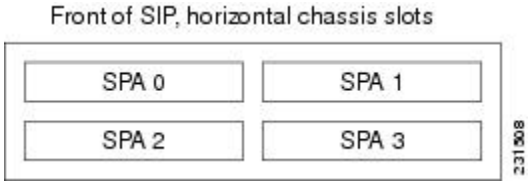

Installation Methods

One set of forward rack-mount brackets come pre-installed on the Cisco ASR 1013 Router as shown in the "Cisco ASR 1013 Router—Rear View" figure in the *Rear View* section, callout number 2. The accessory kit contains the rear rack-mount brackets as shown in the "Cisco ASR 1013 Router—Rear View" figure in the *Rear View* section, callout number 4, which are optional and another set of forward rack-mount brackets.

You can mount the chassis in a19-inch wide (standard), 4-post equipment rack or two-post, using the rack-mount brackets in the accessory kit. The Cisco ASR 1013 Router supports 6 SIPs and provides superslots (more height and power) for the Cisco ASR1000-RP2s and Cisco ASR1000-ESP cards.

Note The Cisco ASR 1013 Router usually ships fully loaded. However, you can remove components from the chassis to make the chassis lighter for your rack installation.

General Rack Installation Guidelines

When planning your rack installation, consider the following guidelines:

- T

  he Cisco ASR 1013 Router overall height is 22.75 inches (57.8 cm). You can install three Cisco ASR 1013 routers in a 42RU equipment rack; but must allow at least one to two inches (2.54 cm to 5.08 cm) of vertical clearance between the router and any equipment above or below it. Measure the proposed rack location before mounting the chassis in the rack.

- Before using a particular rack, check for obstructions (such as a power strip) that could impair rack-mount installation. If a power strip does impair a rack-mount installation, remove the power strip before installing the chassis, and then replace it after the chassis is installed.
- Allow sufficient clearance around the rack for maintenance. If the rack is mobile, you can push it back near a wall or cabinet for normal operation and pull it out for maintenance (installing or moving cards, connecting cables, or replacing or upgrading components). Otherwise, allow 19 inches (48.3 cm) of clearance to remove field-replaceable units.
- Maintain a minimum clearance of 3 inches (7.62 cm) on the front, top, and sides of the chassis for the cooling air inlet and exhaust ports, respectively. Avoid placing the chassis in an overly congested rack or directly next to another equipment rack; otherwise, the heated exhaust air from other equipment can enter the inlet air vents and cause an overtemperature condition inside the router.



Caution To prevent chassis overheating, never install a Cisco ASR 1013 Router in an enclosed room that is not properly ventilated or air conditioned.

- Always install heavier equipment in the lower half of a rack to maintain a low center of gravity to prevent the rack from falling over.
- Install and use the cable-management brackets included with the Cisco ASR 1013 Router to keep cables organized and out of the way of the cards and processors. Ensure that cables from other equipment already installed in the rack do not impair access to the cards or require you to disconnect cables unnecessarily to perform equipment maintenance or upgrades.
- Install rack stabilizers (if available) before you mount the chassis.
- Provide an adequate chassis ground (earth) connection for your chassis.

In addition to the preceding guidelines, review the precautions for avoiding excessive temperature conditions in the “Electrical Safety” section on page 5-21 .

The following table provides the Cisco ASR 1013 Router dimensions and weight information.

Table 81: Cisco ASR 1013 Router Dimensions and Weight

Cisco ASR 1013	Dimensions
Depth	22 in. (558.8cm) (including cable-management brackets and power supply handles).
Height	22.8 in. (579.1cm) - 13RU rack-mount per EIA RS-310 standard

Cisco ASR 1013	Dimensions
Width	17.2 in. (437.4 cm)
Weight	• 184.0 lbs (83.46 kg) (with redundant AC power supply, SPA and route processor and SIP blank covers, two Cisco ASR 1000 Series embedded services processors (Cisco ASR1000-ESP40), two Cisco ASR 1000 Series RP2s (ASR1000-RP2), six Cisco ASR 1000 Series 40 Gbps SIPs (ASR1000-SIP40), and no SPAs). **Note** Using Cisco ASR1000-ESP100 instead of Cisco ASR1000-ESP40 adds 2.1 lbs to the total weight of the router. • Total weight with estimated superslot weight with: • A C power supplies —202 pounds (91.6256 kg) • DC power supplies—208.60 pounds (94.6193 kg)

Guidelines for Equipment Rack Installation

The chassis should already be in the area where you will install it. If you have not determined where to install your chassis, see the "Cisco ASR 1000 Series Routers Component Overview" section on page 2-1 for information about site considerations.

When installing the Cisco ASR 1013 Router, consider the following items:

- The Cisco ASR 1013 Router requires at least 3 inches (7.62 cm) of clearance at the inlet and exhaust vents (the front and top/rear sides of the chassis).
- The Cisco ASR 1013 Router should be installed off the floor. Dust that accumulates on the floor is drawn into the interior of the router by the cooling fans. Excessive dust inside the router can cause overtemperature conditions and component failures.
- Maintain a minimum clearance of 3 inches (7.62 cm) for the front and rear of the chassis for proper chassis cooling. Avoid placing the chassis in an overly congested rack or directly next to another equipment rack; otherwise, the heated exhaust air from other equipment can enter the inlet air vents and cause an overtemperature condition inside the router.
- If rack space allows, it is recommended to leave one rack unit (1.75 inch or 4.45 cm) of vertical clearance between the chassis and any equipment directly above it or below.



Caution Depending on your installation and co-located equipment power dissipation, it is recommended to have some air gap between chassis, if space allows, to reduce residual heating from one chassis to another.

- Have the cable-management bracket (used in four places on the Cisco ASR 1013 chassis: upper half, lower half, and left and right sides) available if you plan to install it on the front of the chassis.
- An adequate chassis ground (earth) connection exists for your router chassis (see the Attaching a Chassis Ground Connection, on page 335).

- Always follow proper lifting practices as outlined in the "Chassis-Lifting Guidelines" section on page 5-23 , when handling the chassis.

Attaching the Rear Rack-Mount Brackets

This section explains how to attach the rear rack-mount brackets to the chassis. Before installing the chassis in the rack, you must install the rack-mount brackets on each side of the chassis. The forward rack-mount brackets are already installed on the Cisco ASR 1013 chassis when it arrives at your site.

The parts and tools required for installing the rack-mount brackets and cable-management brackets are listed in the "Tools and Equipment" section on page 5-23 .

Note The cable-management brackets are installed on the chassis after you install the chassis rack-mount brackets and mount the chassis in the rack.

If you are rack-mounting the chassis using the rear rack-mount brackets, then this type of installation provides for the chassis being recessed in the rack.

To install the rear rack-mount brackets on the Cisco ASR 1013 Router, perform the following steps:

SUMMARY STEPS

1. Locate the threaded holes on the rear side of the chassis. Make certain that you hold the rear t rack-mount bracket with the ear and holes facing outward and towards the rear of the chassis (see the following image, callout number 4).
2. Position the rear rack-mount bracket top hole with the chassis second top hole from the back.
3. Insert and tighten the screws on one side.
4. After the bracket is secured to the side of the chassis, slide the two remaining components into the side rack-mount bracket.
5. Repeat Step 1 through Step 3 on the other side of the chassis. Use all the screws to secure the rear rack-mount brackets to the chassis.

DETAILED STEPS

Step 1 Locate the threaded holes on the rear side of the chassis. Make certain that you hold the rear t rack-mount bracket with the ear and holes facing outward and towards the rear of the chassis (see the following image, callout number 4).

Figure 171: Location of the Rear Rack-Mount Brackets on the Cisco ASR 1013 Router

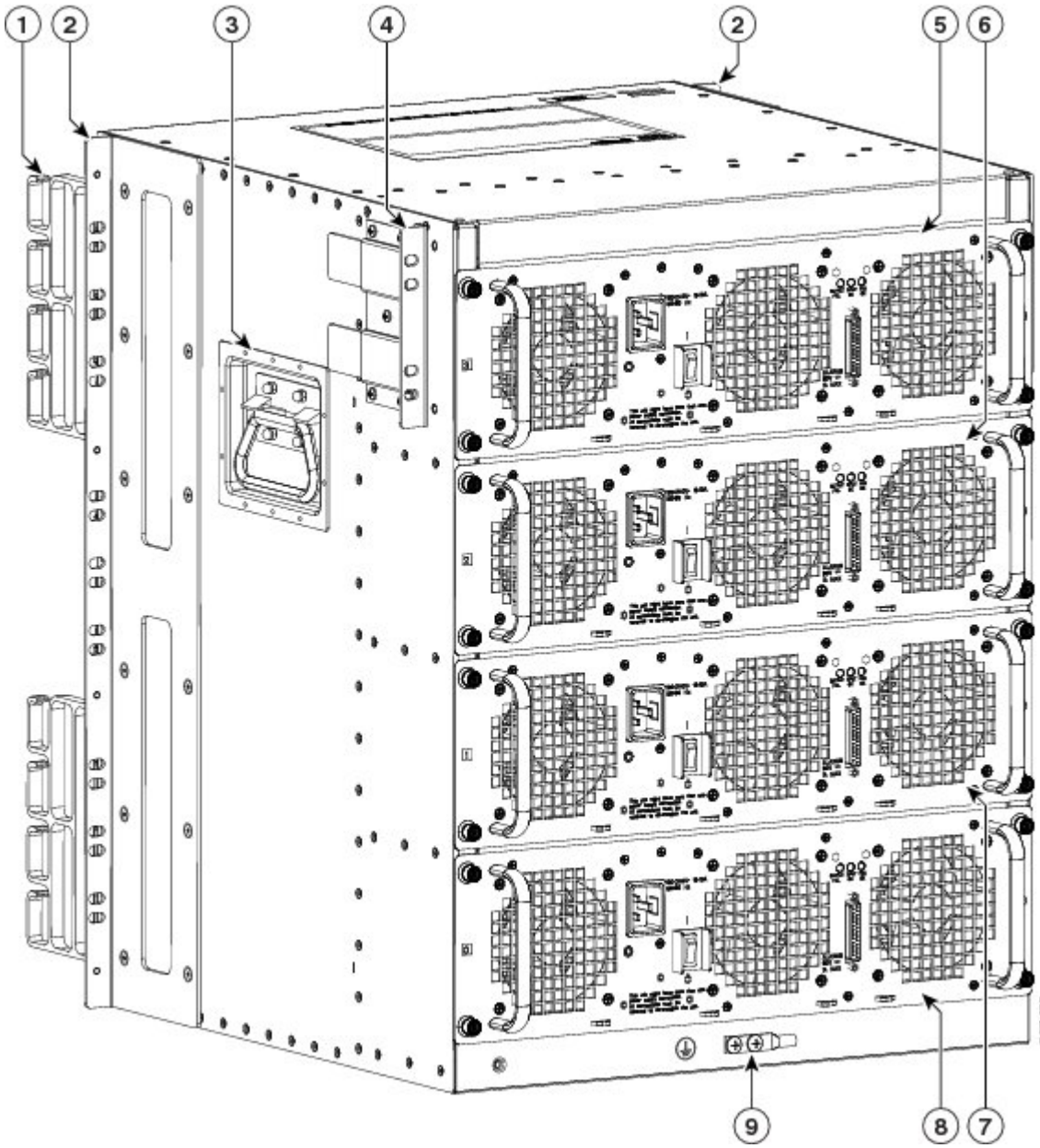

Step 2 Position the rear rack-mount bracket top hole with the chassis second top hole from the back.

Step 3 Insert and tighten the screws on one side.

Step 4 After the bracket is secured to the side of the chassis, slide the two remaining components into the side rack-mount bracket.

Step 5 Repeat Step 1 through Step 3 on the other side of the chassis. Use all the screws to secure the rear rack-mount brackets to the chassis.

What to do next

This completes the steps for attaching the rear rack-mount brackets to the Cisco ASR 1013 Router.

Rack-Mounting the Cisco ASR 1013 Router

The Cisco ASR 1013 Router comes installed with front forward rack-mount brackets. The rear rack-mount brackets are optional and are shipped in the accessory kit along with a set of front rack-mount brackets. The chassis rack-mounting flanges must be secured directly to the chassis before you lift it into the rack.

This section includes the following topics:

Verifying Rack Dimensions

Before you install the chassis, measure the space between the vertical mounting flanges (rails) on your equipment rack to verify that the rack conforms to the measurements shown in the following image.

Figure 172: Verifying Equipment Rack Dimensions

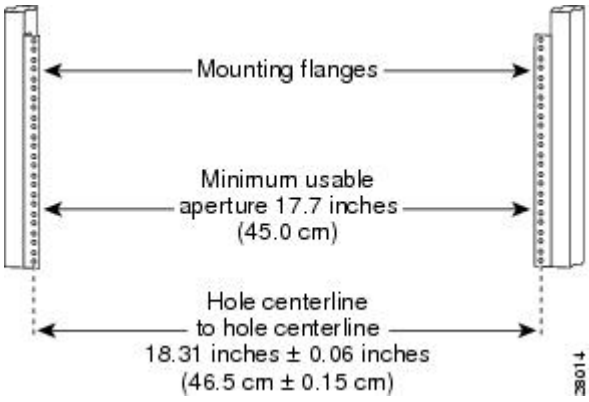

SUMMARY STEPS

1. Mark and measure the distance between two holes on the left and right mounting rails.
2. Measure the space between the inner edges of the left front and right front mounting flanges on the equipment rack.

DETAILED STEPS

Step 1 Mark and measure the distance between two holes on the left and right mounting rails.

The distance should measure 18.31 inches ± 0.06 inches (46.5 cm ± 0.15 cm).

Note Measure for pairs of holes near the bottom, middle and top of the equipment rack to ensure that the rack posts are parallel.

Step 2 Measure the space between the inner edges of the left front and right front mounting flanges on the equipment rack.

The space must be at least 17.7 inches (45 cm) to accommodate the chassis which is 17.25 inches (43.8 cm) wide and fits between the mounting posts on the rack.

Installing the Cisco ASR 1013 Router in a Rack

To mount the chassis in an equipment rack, you must secure the rack-mount brackets to two posts or mounting strips in the rack using the screws provided. Because the rack-mount brackets support the weight of the entire chassis, be sure to use all screws to fasten the two rack-mount brackets to the rack posts. You can install the Cisco ASR 1013 chassis in an equipment rack using the forward rack-mount brackets or rear rack-mount brackets.

You can perform one of the following procedures to install the chassis in a rack:

Installing the Chassis Using the Forward Rack-Mount Brackets

Caution Before you mount the ASR 1013 Router in a rack, make certain you read which rack-mount bracket ear holes to use when positioning the chassis in the rack. As a result of using the designated ear holes on the rack-mount bracket, the cable-management bracket installation will be made easier. For cable-management installation instructions, see theAttaching the Cable-Management Bracket, on page 333 .

Determine where in the rack you want the chassis to be mounted. If you are mounting more than one chassis in the rack, then start from the bottom up or the center of the rack. The following image shows the brackets attached to the chassis. Depending on the bracket holes you use, the chassis may protrude in the rack.

Note The forward rack-mount brackets on the Cisco ASR 1013 Router arrive installed on the chassis and a spare set is included in the accessory kit. However, if you want to install a forward rack-mount bracket on the chassis, then see the instructions in this section.

The following image shows the forward rack-mount brackets, callout number 2 and the rear rack-mount brackets, callout number 4, on the Cisco ASR 1013 Router.

Figure 173: Forward Rack-Mount Brackets on the Cisco ASR 1013 Router

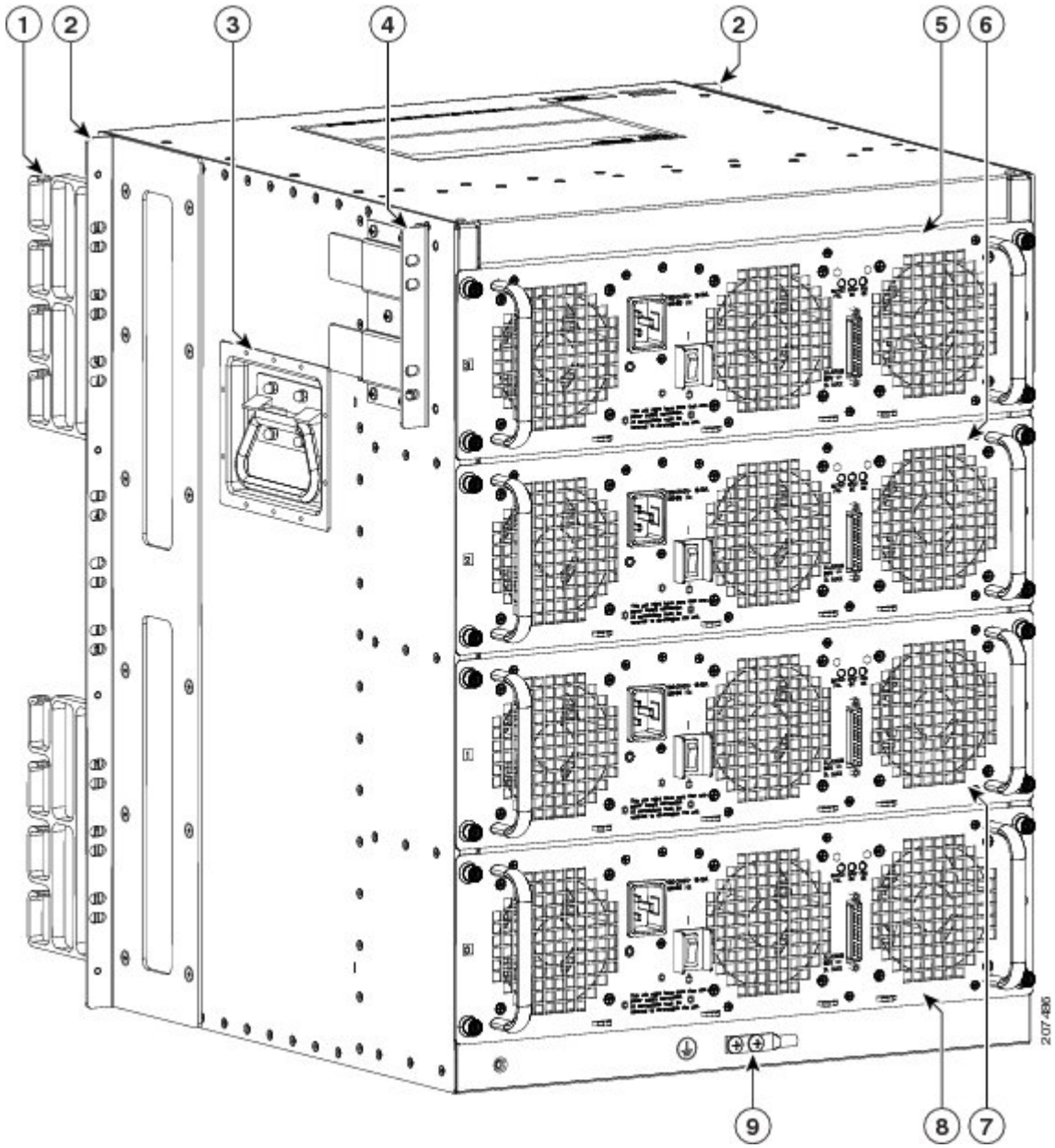

2	Forward rack-mount bracket ear and holes	4	Rear rack-mount bracket

Warning To prevent bodily injury when mounting or servicing this unit in a rack, you must take special precautions to ensure that the system remains stable. The following guidelines are provided to ensure your safety:-This unit should be mounted at the bottom of the rack if it is the only unit in the rack.-When mounting this unit in a partially filled rack, load the rack from the bottom to the top with the heaviest component at the bottom of the rack.-If the rack is provided with stabilizing devices, install the stabilizers before mounting or servicing the unit in the rack. Statement 1006

We recommend that you allow at least 1 or 2 inches (2.54 or 5.08 cm) of vertical clearance between the router and any equipment directly above and below it.

Using Forward Rack-Mount Brackets

To install the chassis in the rack using the forward rack-mount brackets, perform the following steps:

SUMMARY STEPS

1. On the chassis, ensure that all screw fasteners on the installed components are securely tightened.
2. Make sure that your path to the rack is unobstructed. If the rack is on wheels, ensure that the brakes are engaged or that the rack is otherwise stabilized. See the next sections on the types of racks you can use to install the chassis.
3. (Optional) Install a shelf in the rack to support the Cisco ASR 1013 Router. If you use a shelf, this will help support the chassis while you secure it to the rack.
4. With two people, lift the chassis into position between the rack posts.
5. Align the mounting bracket holes with the rack post holes and attach the chassis to the rack.
6. Position the chassis until the rack-mounting flanges are flush against the mounting rails on the rack.
7. Hold the chassis in position against the mounting rails and follow these steps:
8. Tighten all screws on each side to secure the chassis to the equipment rack.

DETAILED STEPS

Step 1 On the chassis, ensure that all screw fasteners on the installed components are securely tightened.

Step 2 Make sure that your path to the rack is unobstructed. If the rack is on wheels, ensure that the brakes are engaged or that the rack is otherwise stabilized. See the next sections on the types of racks you can use to install the chassis.

Step 3 (Optional) Install a shelf in the rack to support the Cisco ASR 1013 Router. If you use a shelf, this will help support the chassis while you secure it to the rack.

Step 4 With two people, lift the chassis into position between the rack posts.

Step 5 Align the mounting bracket holes with the rack post holes and attach the chassis to the rack.

Note If you are using a shelf then raise the chassis to the level of the shelf. Let the bottom of the chassis rest on the brackets, but continue to support the chassis.

Step 6 Position the chassis until the rack-mounting flanges are flush against the mounting rails on the rack.

Step 7 Hold the chassis in position against the mounting rails and follow these steps:

a) Insert the bottom screw into the third hole up from the bottom of the rack-mount ear and use a hand-held screwdriver to tighten the screw to the rack rail

Tip In the next step, insert the top screw diagonally from the bottom screw that you just attached.This helps with keeping the chassis in place.

b) Insert the top screw into the third hole down from the top of the rack-mount ear and tighten the screw to the rack rail.

c) Insert a screw in the middle of the rack-mount bracket on both sides of the chassis.

d) Repeat these steps for the other side of the chassis.

Note As a result of using the specified rack-mount bracket ear holes, the cable-management bracket can be easily attached to the rack-mount bracket after the chassis is installed in the rack.

Step 8 Tighten all screws on each side to secure the chassis to the equipment rack.

What to do next

Using Rear Rack-Mount Brackets

Installing the Chassis Using the Forward Rack-Mount Brackets

To install the chassis in the rack using the rear rack-mount brackets, perform the following steps:

SUMMARY STEPS

1. On the chassis, ensure that all screw fasteners on the installed components are securely tightened.
2. Make sure that your path to the rack is unobstructed. If the rack is on wheels, ensure that the brakes are engaged or that the rack is otherwise stabilized. See the next sections on the types of racks you can use to install the chassis.
3. (Optional) Install a shelf in the rack to support the Cisco ASR 1013 Router. If you use a shelf, this will help support the chassis while you secure it to the rack.
4. With two people, lift the chassis into position between the rack posts.
5. Align the mounting bracket holes with the rack post holes and attach the chassis to the rack.
6. Position the chassis until the rear rack-mounting flanges are flush against the mounting rails on the rack.
7. Hold the chassis in position against the mounting rails and insert all screws that were shipped in the accessory kit.
8. Tighten all screws on each side to secure the chassis to the equipment rack.

DETAILED STEPS

Step 1 On the chassis, ensure that all screw fasteners on the installed components are securely tightened.

Step 2 Make sure that your path to the rack is unobstructed. If the rack is on wheels, ensure that the brakes are engaged or that the rack is otherwise stabilized. See the next sections on the types of racks you can use to install the chassis.

Step 3 (Optional) Install a shelf in the rack to support the Cisco ASR 1013 Router. If you use a shelf, this will help support the chassis while you secure it to the rack.

Step 4 With two people, lift the chassis into position between the rack posts.

Step 5 Align the mounting bracket holes with the rack post holes and attach the chassis to the rack.

Note If you are using a shelf then raise the chassis to the level of the shelf. Let the bottom of the chassis rest on the brackets, but continue to support the chassis.

Step 6 Position the chassis until the rear rack-mounting flanges are flush against the mounting rails on the rack.

Step 7 Hold the chassis in position against the mounting rails and insert all screws that were shipped in the accessory kit.

Step 8 Tighten all screws on each side to secure the chassis to the equipment rack.

What to do next

You can install your Cisco AR1006 chassis on a two-post rack or a four-post rack. See the Two-Post Rack Installation, on page 329 and the four-post rack installation, go to the Four-Post Rack Installation, on page 330.

Two-Post Rack Installation

The Cisco ASR 1013 Router can be installed on a two-post 19-inch equipment rack. The following image shows the Cisco ASR 1013 Router installed on a two-post rack.

Figure 174: Installing the Cisco ASR 1013 Router on a Two-Post Rack

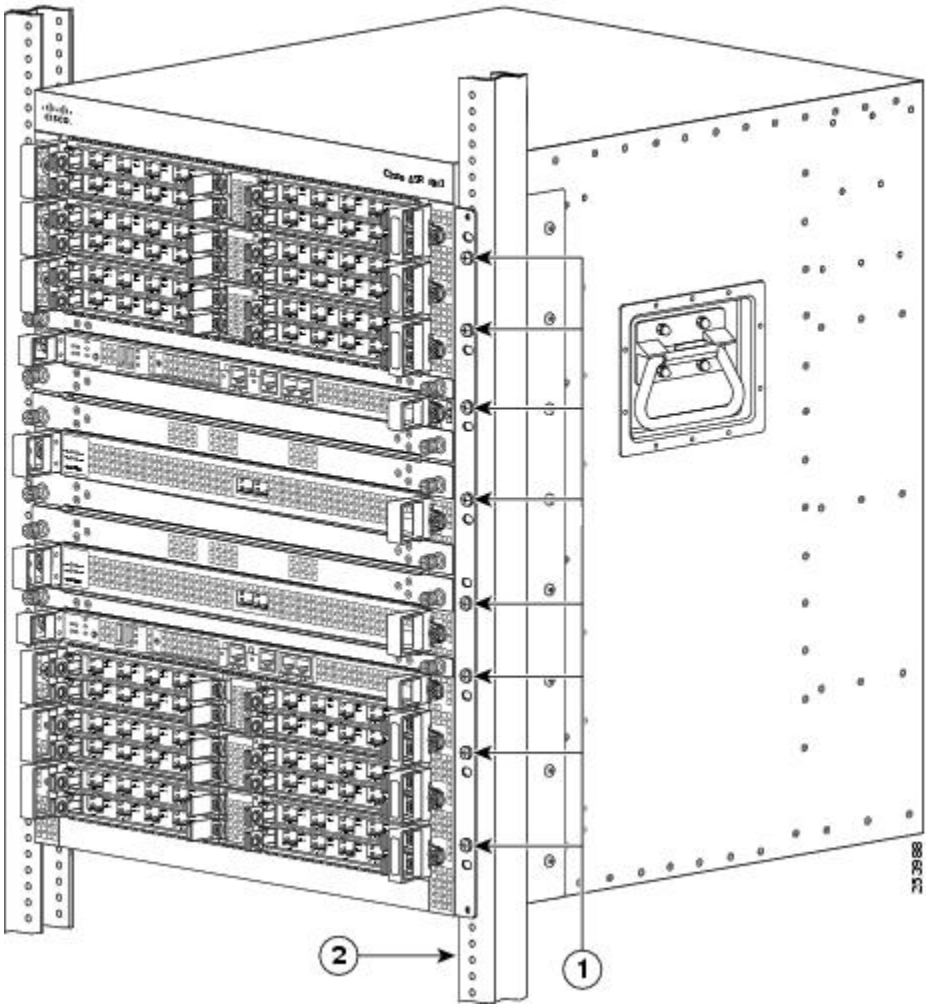

1	Cisco ASR 1013 Router front rack-mount bracket	2	Two-post equipment rack rail

Note Inner clearance (the width between the inner sides of the two posts or rails) must be at least 19 inches (48.26cm). The height of the chassis is 10.45 inches (26.543 cm). Airflow through the chassis is from front to back.

Caution If you are using a two-post rack secure the rack to the floor surface to prevent tipping and avoid bodily injury and component damage.

To install the Cisco ASR 1013 chassis on a two-post equipment rack, with the forward rack-mount brackets, follow these steps:

SUMMARY STEPS

1. Position the chassis so the front is closest to you and lift it carefully into the rack. To prevent injury, avoid any sudden twists or moves.
2. Slide the chassis into the rack, pushing it back until the brackets meet the mounting strips or posts on both sides of the rack.
3. Keeping the brackets flush against the posts or mounting strips, align the holes in the brackets with the holes on the rack or mounting strip.
4. For each bracket, insert and tighten two screws to the rack on both sides.

DETAILED STEPS

Step 1 Position the chassis so the front is closest to you and lift it carefully into the rack. To prevent injury, avoid any sudden twists or moves.

Step 2 Slide the chassis into the rack, pushing it back until the brackets meet the mounting strips or posts on both sides of the rack.

Step 3 Keeping the brackets flush against the posts or mounting strips, align the holes in the brackets with the holes on the rack or mounting strip.

Step 4 For each bracket, insert and tighten two screws to the rack on both sides.

Note Use the third hole up from the bottom of the rack-mount bracket and the third hole down from the top of the rack-mount bracket. See “Cable-Management Brackets Installed on the Cisco ASR 1013 Router” figure in the *Attaching the Cable-Management Bracket* section for the position and location of the ear holes on the rack-mount bracket.

What to do next

This completes the procedure for installing the chassis on a two-post rack. Proceed to the Attaching a Chassis Ground Connection, on page 335 to continue the installation.

Four-Post Rack Installation

The Cisco ASR 1013 Router can be flush-mounted in a 19-inch equipment rack using the rack-mounting kit provided with your system. The Cisco ASR 1013 Router can be mounted into the rack using two recommended methods:

- Installing the chassis in an existing rack with equipment.
- Installing an empty chassis in a rack with no equipment installed.

Note Because the Cisco ASR 1013 chassis is very heavy, it is recommended that the chassis be installed at the bottom of the rack if you are planning to install more than one Cisco ASR 1013 chassis in the same rack.

The following image shows the Cisco ASR 1013 Router installed on a four-post rack.

Figure 175: Installing the Cisco ASR 1013 Router on a Four-Post Rack

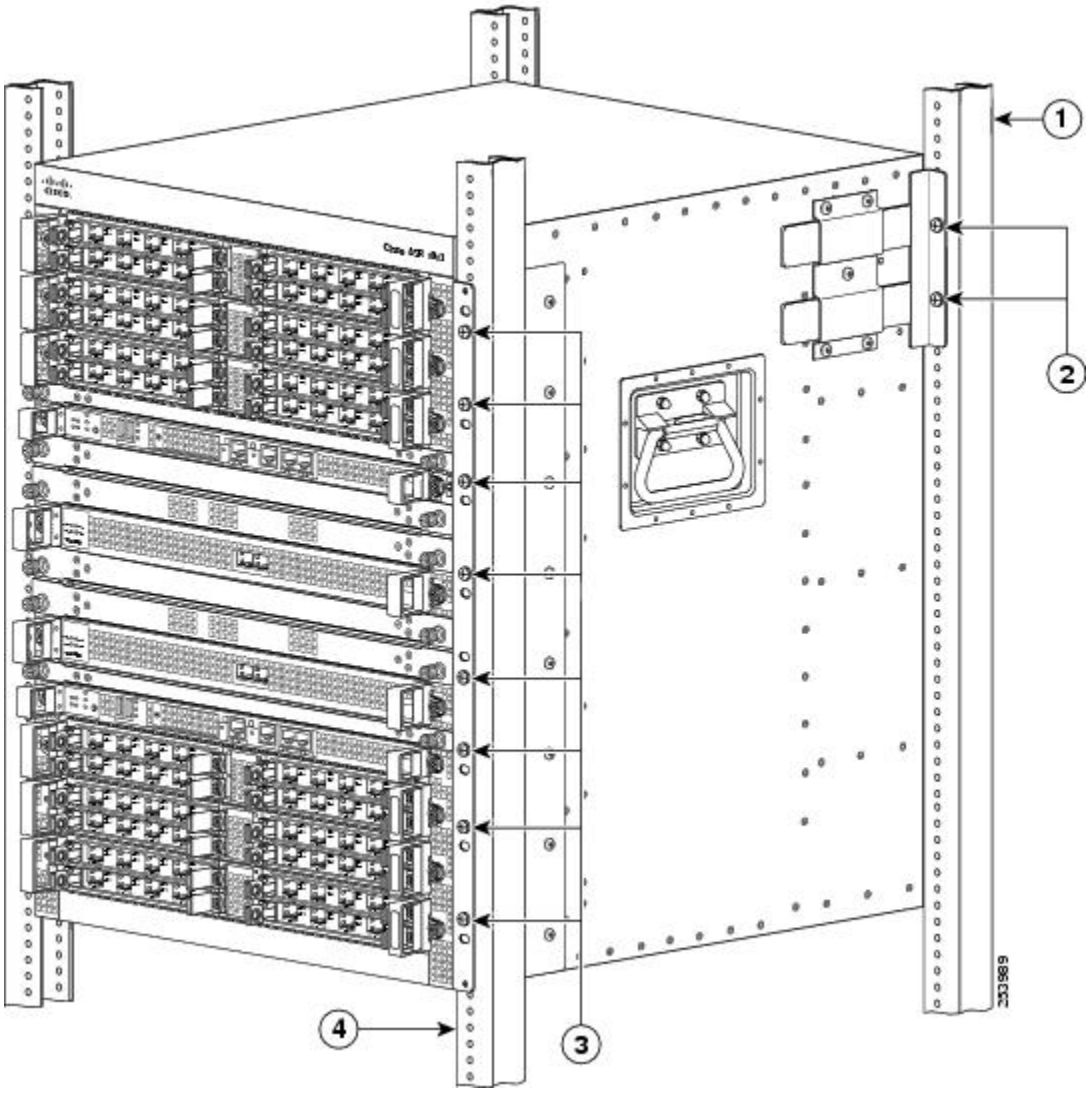

1	Four-post equipment rack rear rail	3	Cisco ASR 1013 front rack-mount brackets
2	Cisco ASR 1013 rear rack-mount brackets	4	Four-post equipment rack front rail

When handling the chassis, always follow proper lifting practices. See the “Chassis-Lifting Guidelines” section.

Note Inner clearance (the width between the inner sides of the two posts or rails) must be at least 19 inches (48.26 cm). The height of the chassis is 22.75 inches (57.8 cm). Airflow through the chassis is from front to back.

Note Make sure the rack is stabilized.

SUMMARY STEPS

1. (Optional) Install a shelf in the rack to support the Cisco ASR 1013 Router. If you are using a shelf then raise the chassis to the level of the shelf. Let the bottom of the chassis rest on the brackets, but continue to support the chassis.Using two people, lift the chassis into the rack using the side handles and grasping underneath the power supply bays.
2. Position the chassis until the rack-mounting flanges are flush against the mounting rails on the rack.
3. Hold the chassis in position against the mounting rails while the second person finger-tightens a screw to the rack rails on each side of the chassis.
4. Finger-tighten 4 more screws to the rack rails on each side of the chassis.
5. Tighten all screws on each side to secure the chassis to the equipment rack.
6. Use a level to verify that the tops of the two brackets are level, or use a measuring tape to verify that both brackets are the same distance from the top of the rack rails.

DETAILED STEPS

Step 1 (Optional) Install a shelf in the rack to support the Cisco ASR 1013 Router. If you are using a shelf then raise the chassis to the level of the shelf. Let the bottom of the chassis rest on the brackets, but continue to support the chassis.Using two people, lift the chassis into the rack using the side handles and grasping underneath the power supply bays.

Step 2 Position the chassis until the rack-mounting flanges are flush against the mounting rails on the rack.

Note Use the third hole up from the bottom of the rack-mount bracket and the third hole down from the top of the rack-mount bracket. See “Cable-Management Brackets Installed on the Cisco ASR 1013 Router” figure in the *Attaching the Cable-Management Bracket* section for position and location of the ear holes on the rack-mount bracket.

Step 3 Hold the chassis in position against the mounting rails while the second person finger-tightens a screw to the rack rails on each side of the chassis.

Step 4 Finger-tighten 4 more screws to the rack rails on each side of the chassis.

Step 5 Tighten all screws on each side to secure the chassis to the equipment rack.

Step 6 Use a level to verify that the tops of the two brackets are level, or use a measuring tape to verify that both brackets are the same distance from the top of the rack rails.

What to do next

This completes the procedure for installing the chassis in the rack. Proceed to the Attaching the Cable-Management Bracket, on page 333 to continue the installation.

Attaching the Cable-Management Bracket

The cable-management brackets mount to each rack-mount bracket on the chassis to provide cable-management to both sides of the chassis (parallel with card orientation). These brackets are screw mounted to the rack-mount brackets to allow easy installation and removal of cables.

The cable-management brackets for the Cisco ASR 1013 are used in four places on the chassis. Each section contain four independent cable-management "U" type feature hooks with two screws each as shown in Figure 176: Cable-Management Brackets Installed on the Cisco ASR 1013 Router, on page 334. For Cisco ASR 1000 SIPs, these brackets work in tandem with shared port adapter product feature cable-management device to allow installation and removal of adjacent cards without the need to remove cables.

Note Make certain that the cable-management bracket "U" type feature is facing upwards when you attach it to the chassis.

Follow these steps to attach two cable-management brackets to each side of the Cisco ASR 1013 Router in the rack:

SUMMARY STEPS

1. Align the cable-management bracket to the rack-mount bracket on the top of each side of the Cisco ASR 1013 Router. The cable-management bracket aligns to the top hole of the chassis rack-mount bracket.
2. Using a Phillips screwdriver, insert the screw through cable-management bracket and into the chassis rack-mount and tighten the screw.
3. Using the bottom rack-mount ear hole on each side of the chassis, insert the screw through cable-management bracket and into the chassis rack-mount)

DETAILED STEPS

Step 1 Align the cable-management bracket to the rack-mount bracket on the top of each side of the Cisco ASR 1013 Router. The cable-management bracket aligns to the top hole of the chassis rack-mount bracket.

Step 2 Using a Phillips screwdriver, insert the screw through cable-management bracket and into the chassis rack-mount and tighten the screw.

Note Use the package of screws that came with your chassis containing eight screws.

Step 3 Using the bottom rack-mount ear hole on each side of the chassis, insert the screw through cable-management bracket and into the chassis rack-mount)

The following image shows the cable-management brackets attached to the chassis in a rack.

Figure 176: Cable-Management Brackets Installed on the Cisco ASR 1013 Router

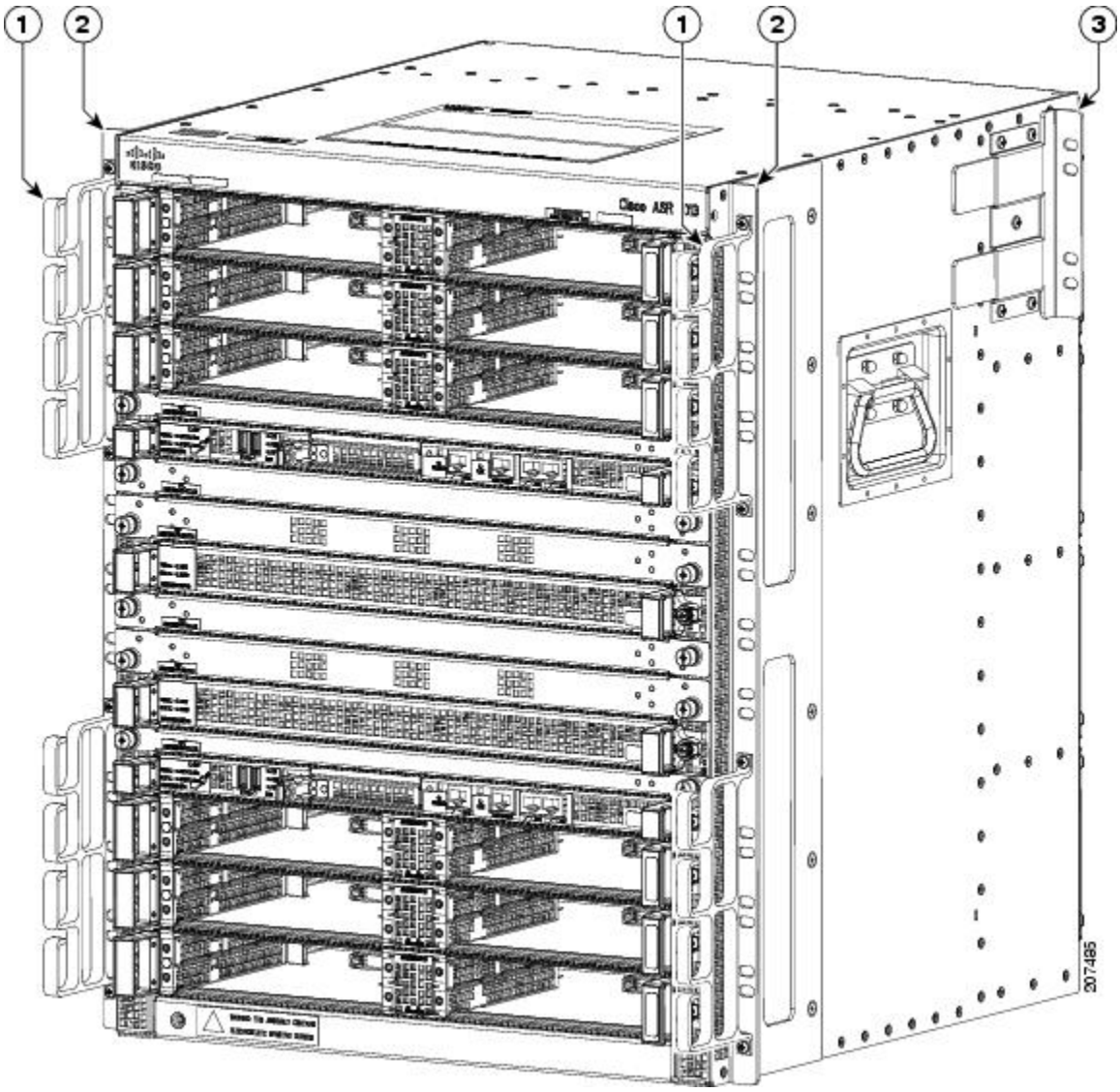

1	Cable-management bracket screw location	3	Chassis front rack-mount bracket
2	Cable-management bracket	—	—

What to do next

This completes the procedure for installing the cable-management brackets on the chassis.

Attaching a Chassis Ground Connection

Connecting the Cisco ASR 1013 Router chassis to ground is required for all DC powered installations and any AC powered installation where compliance with Telcordia grounding requirements is necessary.

Caution The dual-lug chassis stud must be installed, the SIP and SPA must be fully inserted and screwed in and earthed to prevent a potential hazard in a telecom line.

Have the recommended tools and supplies available before you begin this procedure.

Warning This equipment must be grounded. Never defeat the ground conductor or operate the equipment in the absence of a suitably installed ground conductor. Contact the appropriate electrical inspection authority or an electrician if you are uncertain that suitable grounding is available. Statement 1024

Before you connect power or turn on power to your chassis, you must provide an adequate chassis ground (earth) connection for the chassis. A chassis ground connector is provided on each Cisco ASR 1013 Router. There is a ground stud on the rear bottom of the chassis as shown in (See the image on the following section "Recommended Tools and Supplies.")

Recommended Tools and Supplies

The following tools, equipment, and supplies necessary to connect the system ground to the chassis:

- Phillips screwdriver
- Dual-lug chassis ground component
- Grounding wire

Attach the Chassis Ground

Use the following procedure to attach the grounding lug to the chassis ground connector on your chassis:

SUMMARY STEPS

1. Use the wire stripper to strip one end of the AWG #6 wire approximately 0.75 inches (19.05 mm).
2. Insert the AWG #6 wire into the wire receptacle on the grounding lug.
3. Use the crimping tool to carefully crimp the wire receptacle around the wire; this step is required to ensure a proper mechanical connection.
4. Attach the grounding lug with the wire so that the grounding wire does not overlap the power supply.
5. Locate the chassis ground connector on the bottom rear of the Cisco ASR 1013 chassis.
6. Insert the two screws through the holes in the grounding lug as shown in Figure 177: Attaching the Cisco ASR 1013 Router Ground Connection, on page 336.
7. Use the Number 2 Phillips screwdriver to carefully tighten the screws until the grounding lug is held firmly to the chassis. Do not overtighten the screws.
8. Connect the opposite end of the grounding wire to the appropriate grounding point at your site to ensure an adequate chassis ground.

DETAILED STEPS

Step 1 Use the wire stripper to strip one end of the AWG #6 wire approximately 0.75 inches (19.05 mm).

Step 2 Insert the AWG #6 wire into the wire receptacle on the grounding lug.

Step 3 Use the crimping tool to carefully crimp the wire receptacle around the wire; this step is required to ensure a proper mechanical connection.

Step 4 Attach the grounding lug with the wire so that the grounding wire does not overlap the power supply.

Step 5 Locate the chassis ground connector on the bottom rear of the Cisco ASR 1013 chassis.

The following image shows how to attach the ground lug on the Cisco ASR 1013 Router.

Figure 177: Attaching the Cisco ASR 1013 Router Ground Connection

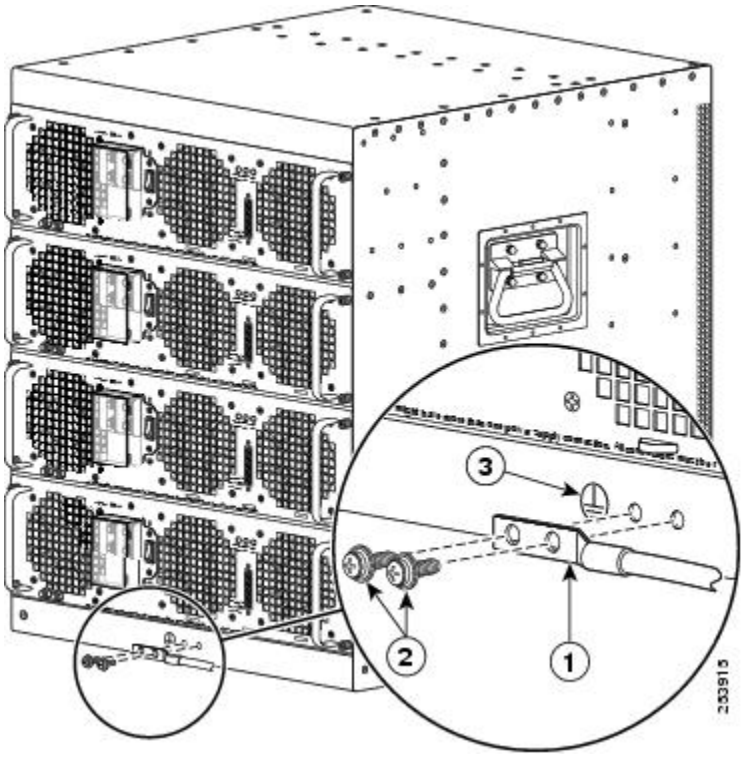

1	Chassis ground studs and lead wire	3	Ground symbol
2	Grounding screws	—	—

Step 6 Insert the two screws through the holes in the grounding lug as shown in Figure 177: Attaching the Cisco ASR 1013 Router Ground Connection, on page 336.

Step 7 Use the Number 2 Phillips screwdriver to carefully tighten the screws until the grounding lug is held firmly to the chassis. Do not overtighten the screws.

Step 8 Connect the opposite end of the grounding wire to the appropriate grounding point at your site to ensure an adequate chassis ground.

What to do next

This completes the procedure for attaching a chassis ground connection. Go to the following cabling sections for information on attaching cables.

Connecting the Shared Port Adapter Cables

The instructions for connecting the cables for the shared port adapter installed in the Cisco ASR 1013 Router are contained in the respective configuration documents for each port adapter. For example, if you are connecting the optical fiber cables for the PA-POS-OC3 port adapter, see PA-POS-OC3 Port Adapter Installation and Configuration at the following location:

http://www.cisco.com/en/US/partner/docs/interfaces_modules/port_adapters/install_upgrade/pos/pa-pos-oc3_install_config/paposoc3.html

Shared port adapter documents are also available on the Cisco Documentation DVD.

Connecting the Console and Auxiliary Port Cables

The Cisco ASR 1013 Router has a DCE-mode console port for connecting a console terminal and an auxiliary port for additional connections to your chassis. The auxiliary port can also be used for diagnostics.

In a fully redundant chassis, each Cisco ASR1000-RP2 is separately connected to each FP and I/O card slot over separate point-to-point connections of the system interconnect over the midplane. The selection of the active RP2s is made separately from the selection of the active embedded services processor.

The following image shows the Cisco ASR 1000 Series Route Processor faceplate.

Figure 178: Cisco ASR1000-RP2 Faceplate LEDs

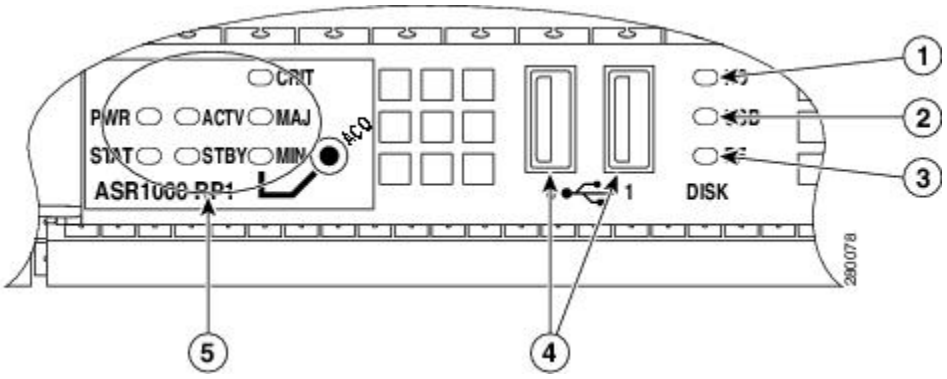

1	Internal hard drive LED	4	USB 0, USB 1 connector
2	External USB Flash LED	5	ASR1000-RP2 LEDs
3	Internal USB bootflash LED	—	—

Figure 179: Cisco ASR 1000 Series Route Processor Faceplate Connectors

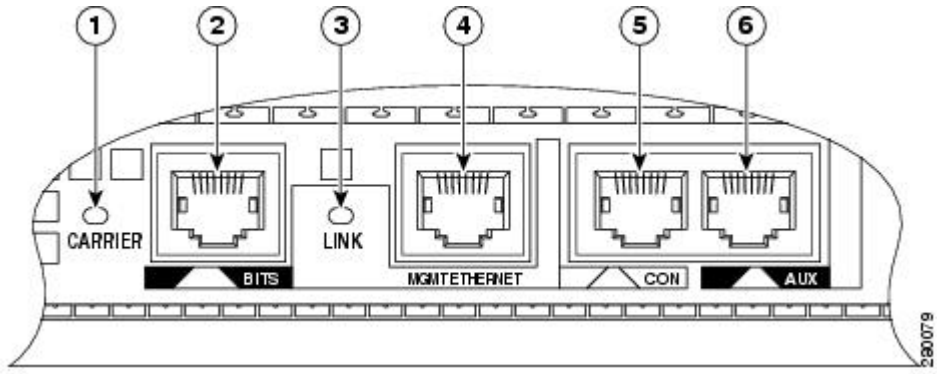

1	CARRIER LED	4	MGMT Ethernet connector
2	BITS connector	5	CON connector
3	LINK LED	6	AUX connector

The Cisco ASR 1013 Router uses RJ-45 ports for both the auxiliary port and the console port. Both the console and the auxiliary ports are asynchronous serial ports; any devices connected to these ports must be capable of asynchronous transmission.

For console and auxiliary port pinouts for the RJ-45 connector, see the "Cisco ASR 1000-RP1 Pinout Specifications" section on page B-1 . Both ports are configured as asynchronous serial ports.

SUMMARY STEPS

1. Before connecting a terminal to the console port, configure the terminal to match the chassis console port as follows: 9600 baud, 8 data bits, no parity, 1 stop bits (9600 8N1).
2. After you establish normal router operation, you can disconnect the terminal.

DETAILED STEPS

Step 1 Before connecting a terminal to the console port, configure the terminal to match the chassis console port as follows: 9600 baud, 8 data bits, no parity, 1 stop bits (9600 8N1).

Step 2 After you establish normal router operation, you can disconnect the terminal.

What to do next

Note A connection will not be established when setting up an out-of-band connection or modem connection in the auxiliary port and the console port.

Connecting the Ethernet Management Port

When using the Fast Ethernet Management port ("Cisco ASR 1000 Series Route Processor Faceplate Connectors" figure in the *Connecting the Console and Auxiliary Port Cables* section, callout 4) in the default mode (speed-auto and duplex-auto) the port operates in auto-MDI/MDI-X mode. The port automatically provides the correct signal connectivity through the Auto-MDI/MDI-X feature. The port automatically senses a crossover or straight-through cable and adapts to it.

However, when the Fast Ethernet Management port is configured to a fixed speed (10 or 100 Mbps) through command-line interface (CLI) commands, the port is forced to MDI mode.

When in a fixed-speed configuration and MDI mode:

- Use a crossover cable to connect to an MDI port
- Use a straight-through cable to connect to an MDI-X port

Connecting Power to the Cisco ASR 1013 Router

Warning The covers are an integral part of the safety design of the product. Do not operate the unit without the covers installed. Statement 1077

Warning When you install the unit, the ground connection must always be made first and disconnected last. Statement 1046

Warning Before performing any of the following procedures, ensure that power is removed from the DC circuit. Statement 1003

Warning Only trained and qualified personnel should be allowed to install, replace, or service this equipment. Statement 1030

Cisco ASR 1013 Router Power Supply Overview

This section provides information about the Cisco ASR 1013 power supply input requirements and power cable options.

The DC power supply for the Cisco ASR 1013, ASR 1006, ASR 1004, and ASR 1002 routers operate at individual specifications. The following table shows the common input ranges and circuit breaker requirements.

Table 82: Cisco ASR 1000 Series Router DC Power Supply System Input Requirements

Cisco ASR 1000 Series Router DC Power Supply	System Input Rating (Amps)	Circuit Breaker Amps	AWG # Wire		
		Minimum	Maximum	Minimum	Maximum
Cisco ASR 1006	40	Always 50	Always AWG #6 wire		
Cisco ASR 1004	24	30	40	10	8
Cisco ASR 1002	16	20	30	12	10
Cisco ASR 1013	40	Always 50	Always AWG #6 wire		
For example, the Cisco ASR 1002 Router DC power supply, with 16 Amp input rating must use an AWG #12 gauge wire for a 20 A circuit breaker and an AWG #10 gauge wire for a 30 A circuit breaker.					

Power Cords Supported by the Cisco ASR 1013 Router

The following power cords are supported by the Cisco ASR 1013 Router:

- CAB-AC20A-90L-IN—20 A AC right-angle power cord—International
- CAB-4000W-US1—Power Cord, 250 VAC 20 A, Right Angle C19, NEMA 6-20 Plug, US
- CAB-US520-C19-US—NEMA 5-15 to IEC-C19 14ft US

The Cisco ASR 1013 Router modular chassis supports redundant power entry modules (PEMs). At least one PEM in each 1+1 redundant power supply zone must be functioning to power the zone and both zones must be functional. In the event of a single fan failure, the remaining fans are sufficient to cool the entire chassis although fan speed may have to be increased.

The Cisco ASR 1013 Router system is configured in a dual zone 1+1 power supply configuration. For ASR 1013 router power consumption specifications, see the "Cisco ASR 1013 Router Specifications" section on page A-14 .

The following items list the maximum input and output of the system power consumption for the two power zones in the Cisco ASR 1013 Router:

- Maximum input (DC): 4,200W
- Maximum input (AC – High Line): 4,000 W
- Maximum output (DC and AC – High Line): 3,390 W

Note At least one power supply in each of the two power supply zones must be powered on before the software boots up. This prevents the route processor from detecting a power supply failure in a zone that is not being used to power the active route processor. If you plan to connect the four power supplies to two independent circuits for redundancy, you must ensure that a power supply from each power supply zone is connected to each circuit. PS0 and PS1 are in power supply zone 0, and PS2 and PS3 are in power supply zone 1. In this scenario, for example, PS0 and PS2 can be connected to one circuit and PS1 and PS3 can be connected to the other circuit. Alternatively, PS0 and PS3 can be connected to one circuit and PS1 and PS2 can be connected to the other circuit.

Note Detailed instructions for removing and replacing the Cisco ASR 1000 Series AC and DC power supplies are in the "Removing and Replacing the Cisco ASR 1013 Router Power Supplies" section on page 14-93 .

Connecting AC Input Power to Cisco ASR 1013 Router

Follow these steps to connect an AC-input power supply to the Cisco 1013 chassis:

SUMMARY STEPS

1. At the rear of the chassis, check that the power switch on the power supply is in the Standby position.
2. Plug the power cable into the inlet.
3. Plug the AC power supply cable into the AC power source.

DETAILED STEPS

Step 1 At the rear of the chassis, check that the power switch on the power supply is in the Standby position.

Step 2 Plug the power cable into the inlet.

Note For additional AC power cable strain relief, secure the cable to the power supply handle by inserting a nylon cable tie through the hole in the handle and around the cable.

The following image shows the Cisco ASR 1013 Router AC power supply.

Figure 180: Cisco ASR 1013 Router AC Power Supply

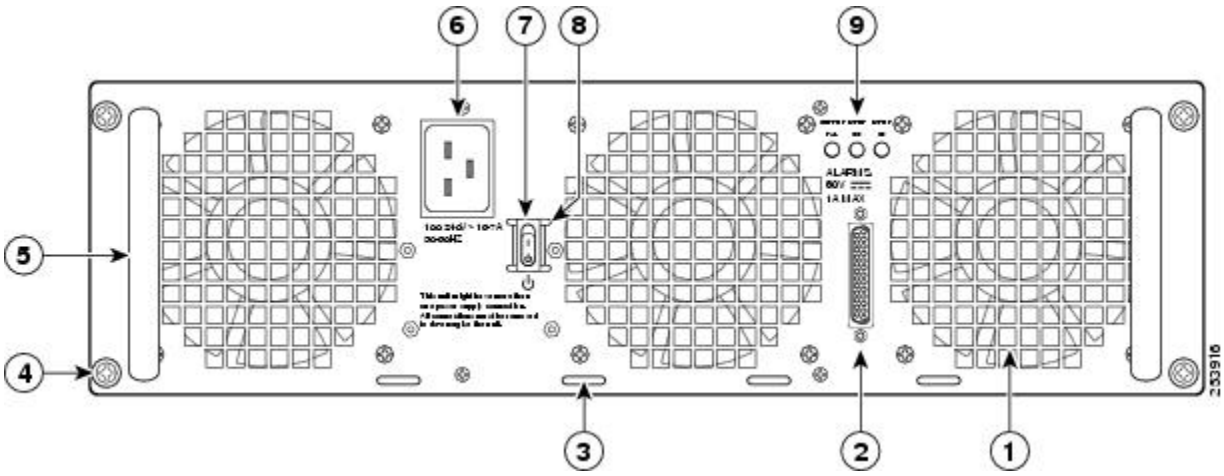

1	AC power supply fan	6	AC power inlet
2	DB-25 alarm connector	7	AC power supply Standby switch
3	Tie-wrap tab	8	Protective shielding on both sides of the Standby switch
4	AC power supply captive screw	9	AC power supply LEDs
5	AC power supply handle	—	—

Note Shielded cables must be used to connect to the DB-25 alarm connector on both the AC and DC power supplies in order to comply with FCC/EN55022/CISPR22 Class A emissions requirements. See the "How Cisco ASR1000-RP Alarm Monitoring Works" section on page 2-22 .

Step 3 Plug the AC power supply cable into the AC power source.

What to do next

This completes the procedure for connecting AC-input power.

Connecting DC Input Power to Cisco ASR 1013 Router

This section describes how to connect the DC power supply into the Cisco ASR 1013 Router. The following image shows the Cisco ASR 1013 Router DC power supply and labels.

Figure 181: Cisco ASR 1013 Router DC Power Supply

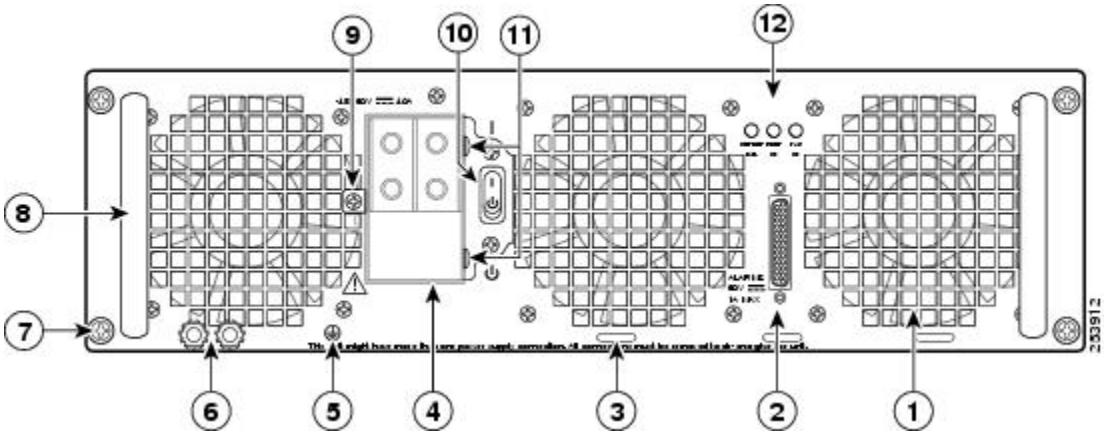

1	Fan	7	DC power supply captive screw
2	DB-25 alarm connector*	8	DC power supply handle
3	Tie-wrap tab	9	Terminal block and plastic cover single screw
4	DC power supply terminal block and plastic cover	10	On/Off (|/O) circuit breaker switch
5	Ground symbol	11	Terminal block and plastic cover slot tab
6	DC power supply ground studs	12	Power supply LEDs

Note Shielded cables must be used to connect to the DB-25 alarm connector on both the AC and DC power supplies, in order to comply with FCC/EN55022/CISPR22 Class A emissions requirements.

Before you begin to install the DC power supply into the Cisco ASR 1013 Router, read these important notices:

- The color coding of the DC input power supply leads depends on the color coding of the DC power source at your site. Typically, green or green/yellow is used for ground (GND), black is used for –48 V on negative (–) terminal and red is used for RTN on the positive (+) terminal. Make certain the lead color coding you choose for the DC input power supply matches lead color coding used at the DC power source.
- For DC input power cables, select the appropriate wire gauge based on the National Electrical Code (NEC) and local codes for 40-amp service at nominal DC input voltage (–48/–60 VDC). Three pairs of cable leads, source DC (–) and source DC return (+), are required for each power distribution unit (PDU). These cables are available from any commercial cable vendor. All input power cables for the chassis should have the same wire gauge and cable lengths should match within 10 percent of deviation.

Each DC input power cable is terminated at the PDU by a cable lug. The cable lugs must be dual-hole, and have a straight tongue. They must be able to fit over 1/4-inch terminal studs at 0.625-inch (15.88-mm) centers.

Note DC input power cables must be connected to the PDU terminal studs in the proper positive (+) and negative (–) polarity. In some cases, the DC cable leads are labeled, which is a relatively safe indication of the polarity. However, you must verify the polarity by measuring the voltage between the DC cable leads. When making the measurement, the positive (+) lead and the negative (–) lead must always match the (+) and (–) labels on the power distribution unit.

- A ground cable is required for each DC PDU. We recommend that you use at least 6-AWG multistrand copper wire. This wire is not available from Cisco Systems; it is available from any commercial cable vendor.

The ground wire cable lug should be dual-hole (as shown in Figure 182: DC Input Power Cable Lug, on page 344) and able to fit over M6 terminal studs at 0.625 inch (15.88mm) centers. Recommended lug terminal wire size Panduit part number:

- • LCD8-14A-L for 8AWG wire size
  • LCD6-14A-L for 6AWG wire size

Figure 182: DC Input Power Cable Lug

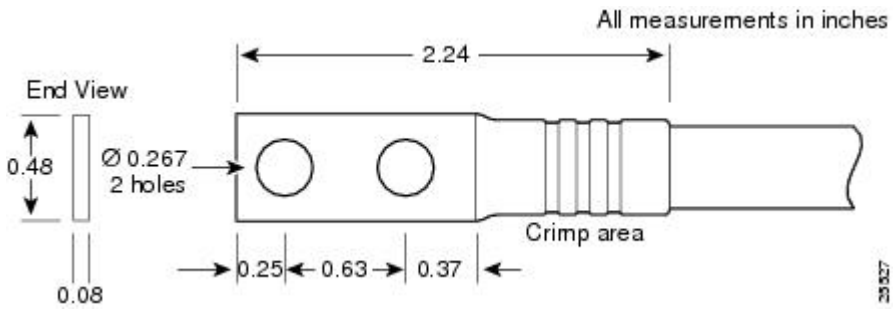

Note To avoid hazardous conditions, all components in the area where DC input power is accessible must be properly insulated. Therefore, before installing the DC cable lugs, be sure to insulate the lugs according to the manufacturer's instructions.

Warning When you install the unit, the ground connection must always be made first and disconnected last. Statement 1046

To connect the DC power supply, follow these steps:

SUMMARY STEPS

1. Make certain that the chassis grounding is connected before you begin installing the DC power supply
2. Locate the stud (see Figure 183: Cisco ASR 1013 Router DC Power Supply Grounding Stud and Cable, on page 346, callout 6) on the DC power supply for the **GND** connection which must be connected first and follow these steps:

3. Attach the other end of the cable to the site's ground connection.
4. Remove the plastic cover from the terminal block.
5. You must wrap the positive and negative lead cables with sleeving. Take each lead wire and cover the area from the lug to the wire with heavy shrink sleeving (see the following the image).
6. For easier cable-management, insert the negative lead cable first. Replace the ground lug with cable in the following order:
7. Tighten the Kepnut screw to recommended torque of 18 in-lbs minimum to 22 in-lbs maximum for the positive stud and wire.
8. Use tie wraps to secure the wires, so that the wires are not pulled from the terminal block by casual contact. Ti-wrap studs are located below the power supply terminal block (see the "Cisco ASR 1000 Series Route Processor Console Port Connectors" figure in the *Connecting a Terminal to the Cisco ASR 1000 Series RP Console Port* section).
9. Replace the terminal block plastic cover and tighten the screw. The plastic cover is slotted and keyed to fit correctly over the terminal block.
10. Remove the tape from the circuit-breaker switch handle and move the circuit-breaker handle to the on position.
11. Switch the circuit breaker switch to the On (|) position.

DETAILED STEPS

Step 1 Make certain that the chassis grounding is connected before you begin installing the DC power supply

Step 2 Locate the stud (see Figure 183: Cisco ASR 1013 Router DC Power Supply Grounding Stud and Cable, on page 346, callout 6) on the DC power supply for the **GND** connection which must be connected first and follow these steps:

a) Using the grounding lug, replace the washers and Kepnut screw in the following order.

- • Flat washer
  - • Grounding cable lug
  - • Kepnut screw

b) Tighten the Kepnut screws on the power supply studs.

Figure 183: Cisco ASR 1013 Router DC Power Supply Grounding Stud and Cable

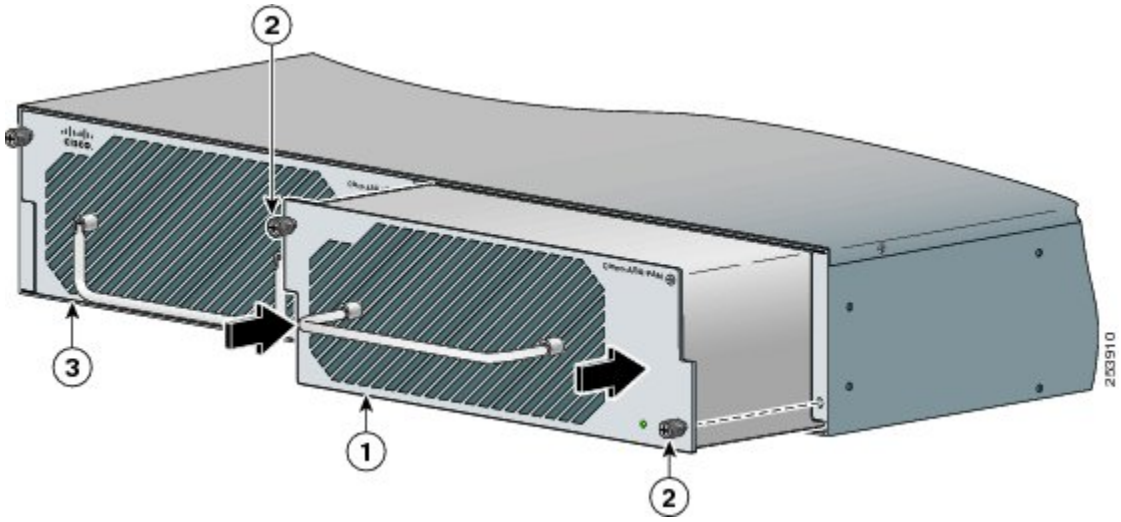

1	DC power supply grounding stud with wire	4	Flat washer
2	Grounding screws	5	Kepnut screw
3	DC Power supply ground symbol	—	—

Note Shielded cables must be used to connect to the DB-25 alarm connector on both the AC and DC power supplies in order to comply with FCC/EN55022/CISPR22 Class A emissions requirements. See the "How Cisco ASR1000-RP Alarm Monitoring Works" section.

Step 3 Attach the other end of the cable to the site's ground connection.

Step 4 Remove the plastic cover from the terminal block.

Caution Before you continue to install the terminal block ground wires, stop and perform Step 5. To prevent any contact with metal lead on the ground wire and the plastic cover.

Step 5 You must wrap the positive and negative lead cables with sleeving. Take each lead wire and cover the area from the lug to the wire with heavy shrink sleeving (see the following the image).

Figure 184: DC Power Supply Terminal Block Ground Cable Lugs

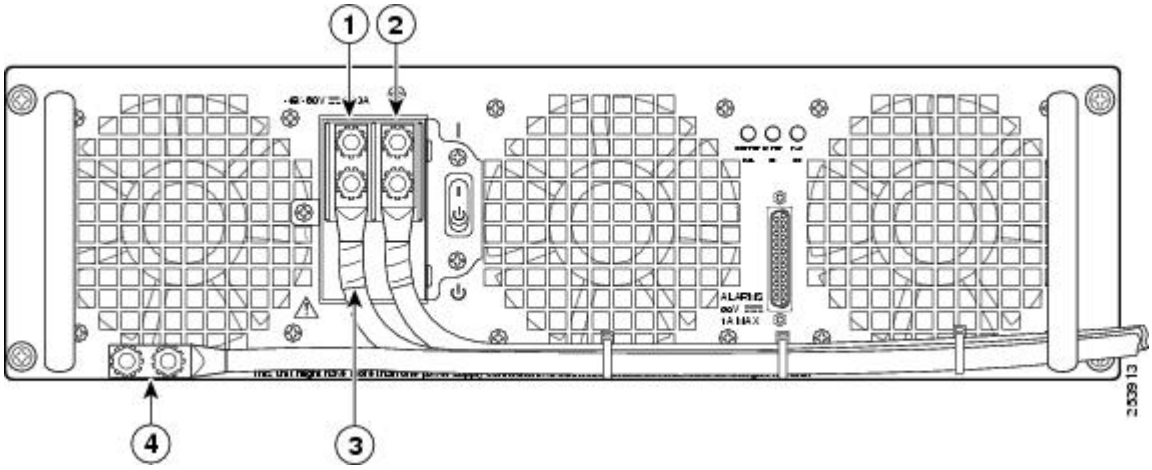

1	Negative lug and wire with sleeving wrapped around the wire and end of lug	3	Location of sleeving wrapped around the wire and end of the grounding stud
2	Positive lug and wire with sleeving wrapped around the wire and end of lug	4	Ground lug and wire

Step 6 For easier cable-management, insert the negative lead cable first. Replace the ground lug with cable in the following order:

a) Flat Washer
b) Ground lug with negative wire
c) Kepnut screw

Step 7 Tighten the Kepnut screw to recommended torque of 18 in-lbs minimum to 22 in-lbs maximum for the positive stud and wire.

Note Secure the wires coming in from the terminal block so that they cannot be disturbed by casual contact.

Step 8 Use tie wraps to secure the wires, so that the wires are not pulled from the terminal block by casual contact. Ti-wrap studs are located below the power supply terminal block (see the "Cisco ASR 1000 Series Route Processor Console Port Connectors" figure in the *Connecting a Terminal to the Cisco ASR 1000 Series RP Console Port* section).

Step 9 Replace the terminal block plastic cover and tighten the screw. The plastic cover is slotted and keyed to fit correctly over the terminal block.

Step 10 Remove the tape from the circuit-breaker switch handle and move the circuit-breaker handle to the on position.

Step 11 Switch the circuit breaker switch to the On (|) position.

What to do next

This completes the procedure for connecting the DC power supply in the Cisco ASR 1013 Router.

Connecting a Terminal to the Cisco ASR 1000 Series RP Console Port

The Cisco ASR 1013 route processor has an asynchronous serial (EIA/TIA-232) RJ-45 console port labeled CON on its front panel as shown in Figure 185: Cisco ASR 1000 Series Route Processor Console Port Connectors, on page 349, callout 5. You can connect this port to most types of video terminals through use of the console cable kit that is included with your Cisco ASR 1013 Router. The console cable kit contains:

- One RJ-45 to RJ-45 crossover cable
- One RJ-45 to DB-25 (female) adapter
- One RJ-45 to DB-9 (female) adapter

A crossover cable reverses pin connections from one end to the other. In other words, it connects pin 1 (at one end) to pin 8 (at the other end), pin 2 to pin 7, pin 3 to pin 6, and so on. You can identify a crossover cable by comparing the two modular ends of the cable. Hold the cable ends in your hand, side-by-side, with the tabs at the back. Ensure that the wire connected to the outside (left) pin of the left plug (pin 1) is the same color as the wire connected to the outside (right) pin of the right plug (pin 8).

Use the following procedure to connect a video terminal to the console port on a route processor.

Note Each Cisco ASR 1000 Series Route Processor must have a console port connection (typically to a terminal server) if you are running a redundant configuration in the chassis.

Users using the console port to access the router are automatically directed to the IOS command-line interface, by default.

If a user is trying to access the router through the console port and sends a break signal (a break signal can be sent by entering Ctrl-C or Ctrl-Shift-6, or by entering the send break command at the Telnet prompt) before connecting to the IOS command-line interface, the user is directed into diagnostic mode by default if the non-RPIOS sub-packages can be accessed.

These settings can be changed by configuring a transport map for the console port and applying that transport map to the console interface.

The following image shows the Cisco ASR 1000 Series route processor console port connectors.

Figure 185: Cisco ASR 1000 Series Route Processor Console Port Connectors

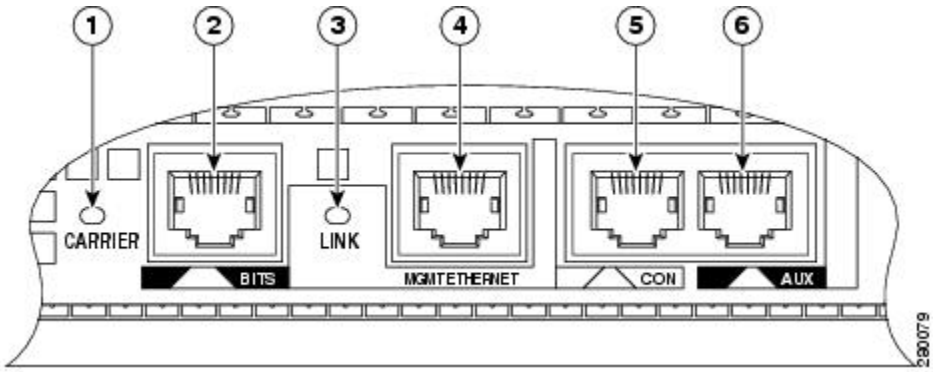

SUMMARY STEPS

1. Connect one end of the RJ-45 cables to the serial RJ-45 port (CON) on the Cisco ASR1000-RP2 route processor.
2. Run the cable up and through the cable-management bracket and connect the other end of the RJ-45 cable to the RJ-45 adapter,
3. Connect the adapter to your video terminal to complete the cable connection.
4. Power on your video terminal.
5. Configure your video terminal to match the following default console port settings: 9600 baud, 8 data bits, No parity generation or checking, 1 stop bit, and No flow control.
6. Go to the Connecting the System Cables, on page 349 to continue the installation.

DETAILED STEPS

Step 1 Connect one end of the RJ-45 cables to the serial RJ-45 port (CON) on the Cisco ASR1000-RP2 route processor.

Step 2 Run the cable up and through the cable-management bracket and connect the other end of the RJ-45 cable to the RJ-45 adapter,

Step 3 Connect the adapter to your video terminal to complete the cable connection.

Step 4 Power on your video terminal.

Step 5 Configure your video terminal to match the following default console port settings: 9600 baud, 8 data bits, No parity generation or checking, 1 stop bit, and No flow control.

Step 6 Go to the Connecting the System Cables, on page 349 to continue the installation.

Connecting the System Cables

Keep the following guidelines in mind when connecting external cables to the Cisco ASR 1013 Router:

- To reduce the chance of interference, avoid crossing high-power lines with any interface cables.
- Verify all cabling limitations (particularly distance) before powering on the system.

Attaching Cable Retention Bracket on AC Power Supply

This section explains how to attach the cable retention bracket on AC power supply of the chassis.

The following image shows the cable retention bracket attaching to the AC power supply.

Figure 186: Cable Retention Bracket Attaching to the AC Power Supply

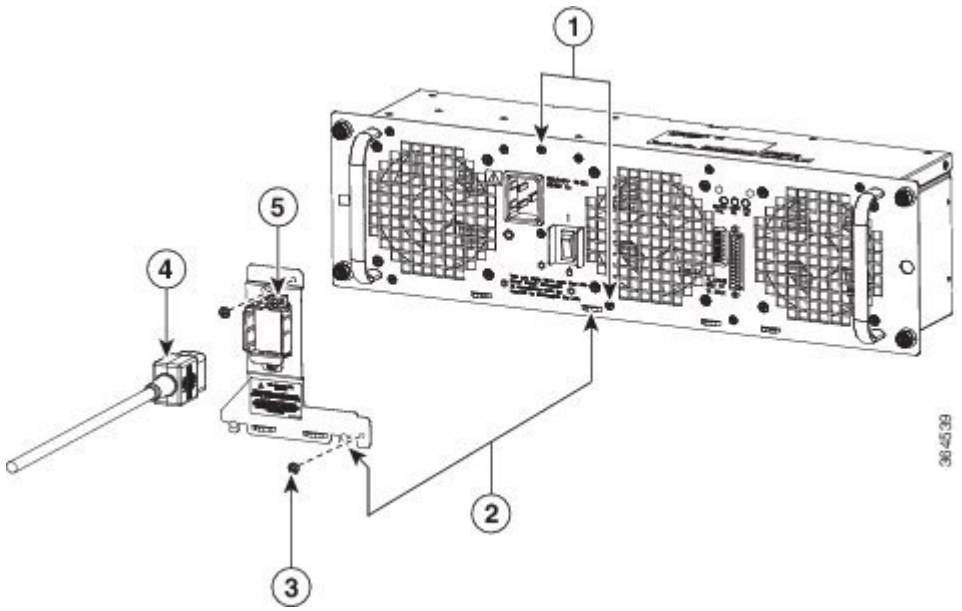

SUMMARY STEPS

1. Remove the two M3X5mm screws and discard.
2. Install AC cord retainer by inserting tabs into lance features on panel.
3. Secure AC cord retainer with two M3X8mm screws included in kit.
4. Connect AC power cord.
5. Secure AC cord by tightening retainer screw.

DETAILED STEPS

Step 1 Remove the two M3X5mm screws and discard.

Step 2 Install AC cord retainer by inserting tabs into lance features on panel.

Step 3 Secure AC cord retainer with two M3X8mm screws included in kit.

Step 4 Connect AC power cord.

Step 5 Secure AC cord by tightening retainer screw.

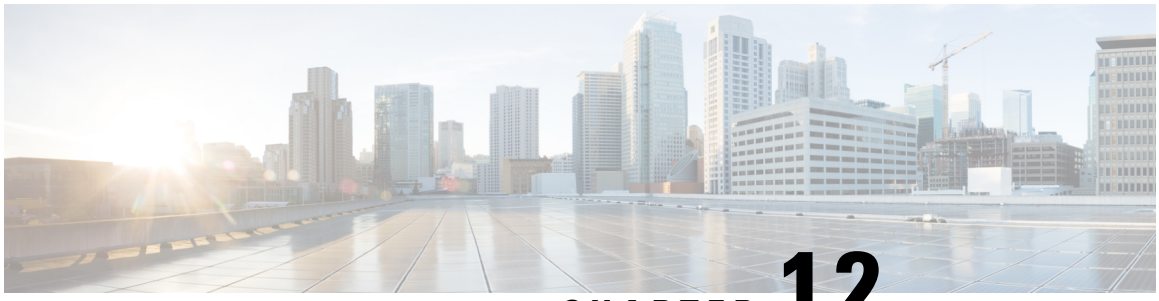

CHAPTER 12

Cisco ASR 1001 Router Overview and Installation

This chapter describes the Cisco ASR 1001 Router and provides procedures for installing the Cisco ASR 1001 Router on an equipment shelf or tabletop or in an equipment rack.

This chapter contains the following sections:

- Cisco ASR 1001 Router Description, on page 351
- Installation Methods, on page 366
- General Rack Installation Guidelines, on page 367
- Guidelines for an Equipment Shelf or Tabletop Installation, on page 368
- Mounting the Cisco ASR 1001 Router on an Equipment Shelf or Tabletop Installation, on page 368
- Rack-Mounting the Cisco ASR 1001 Router, on page 370
- Attaching the Chassis Rack-Mount Brackets, on page 371
- Installing the Cisco ASR 1001 Router in a Rack, on page 373
- Attaching the Cable-Management Bracket, on page 377
- Attaching a Chassis Ground Connection, on page 378
- Connecting the Shared Port Adapter Cables, on page 381
- Connecting the Console and Auxiliary Port Cables, on page 381
- Connecting a Terminal to the Cisco ASR1000-RP1 Console Port, on page 383
- Connecting Cables, on page 384
- Overview of AC and DC Power Supplies for the Cisco ASR 1001 Router, on page 384
- Cisco ASR 1001 Router Power Supply Installation, on page 385

Cisco ASR 1001 Router Description

The Cisco ASR 1001 Router is part of the Cisco aggregation services family of routers. The Cisco ASR 1001 Router offers a compact form factor router that satisfies customer demands such as low power consumption and decreased usage of rack space. The Cisco ASR 1001 Router has the route processor, embedded services processor, and SIP integrated within the chassis with one half-height SPA slot.

By default, the Cisco ASR 1001 Router is shipped with 4 GB of DRAM. To implement software redundancy, a minimum of 8 GB memory must be installed on the router.

The Cisco ASR 1001 Router supports:

- ESP bandwidth 2.5 Gbps (default) to 5 Gbps of forwarding performance (optional software option)
- ESP memory: 1-GB DRAM default; 1-GB DRAM maximum

- Route-processor memory comes with 4-GB DRAM (default); 8-GB DRAM maximum
- 4-Gigabit Ethernet small form-factor pluggable (SFP) ports

For information about the SFP transceiver modules that are compatible with Cisco ASR 1002 Built-in Gigabit Ethernet Ports (4x1GE), refer to the "Modular Optics Compatibility" section in Cisco ASR 1000 Series Aggregation Services Routers SIP and SPA Hardware Installation Guide .

- External USB flash memory 1-GB USB flash memory support

Cisco ASR 1001 Router Architecture

The Cisco ASR 1001 Router provides all the Cisco ASR 1000 Series Router features, services, and performance in a small form-factor chassis. The chassis contains a single integrated mainboard that implements all functions of the route processor (RP), a SPA embedded processor (SIP), a forwarding processor (ESP) and a built-in 4x1 GE SPA.

The SPA interface is connected to a built-in 4xGE SPA, a single half-height (HH) SPA bay, and one flexible integrated daughter card (IDC), providing additional SPA interfaces.

Cisco ASR 1001 Router hardware features include:

- Front-to-back air flow, with 7 built-in cooling fans, numbered from left to right, zero (0) to 6.
- Supports 1 + 1 redundant AC or DC power supplies.
- A cover interlock prevents cover removal with power supplies installed.
- Provides one half-height SPA bay (Bay 1 online insertion and removal (OIR) supported) and integrates a passive board, which consists of a standard SPA interface connector and an interface connector, to the mainboard.
- Support for one factory-configurable integrated daughter card in SPA Bay 2. The integrated daughter card, in SPA Bay 2 is part of the base configuration, and is not an option.
- Provides unique front panels for each integrated daughter card configuration.
- 8 GB internal flash
- Console and Auxiliary RJ-45 ports
- 4 GB DRAM (default)
- Forwarding Performance = 2.5G default, 5G with software license

The Cisco ASR 1001 Router can accommodate different integrated daughter cards. The chassis top cover includes the integrated daughter card front panel with a common base chassis.There will be different top covers for each integrated daughter cards and one for orders with no integrated daughter card.

The Cisco ASR 10001 Router can be shipped with different orderable configurations. The following IDC configurations are available:

Note See the *MIBs for the Cisco ASR 1001 Router* appendix for information about the MIBs that can be used to manage these IDCs.

• IDC-HD80G

IDC-HD80G can support a single 2.5-inch SATA HDD/SSD (see the following image).

Figure 187: Cisco ASR 1001 Router with IDC-HD80G

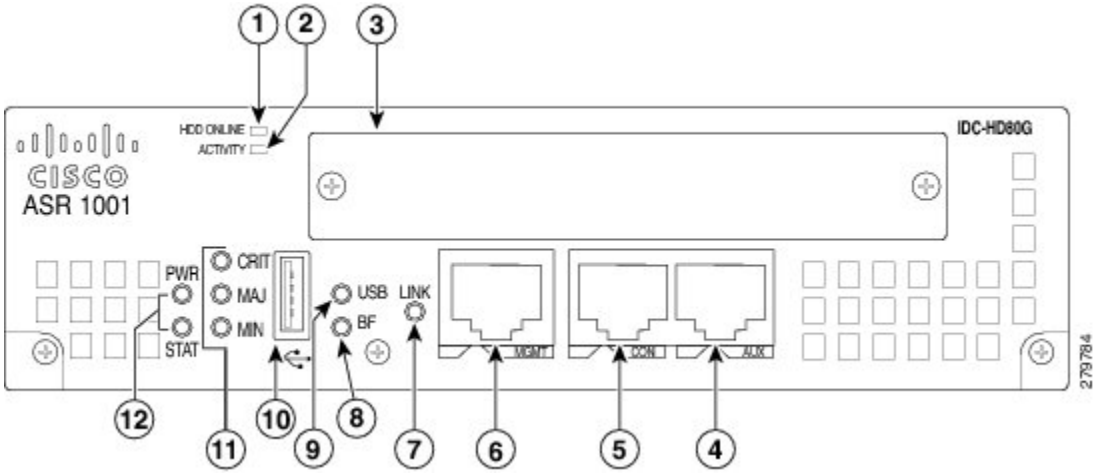

1	HDD Online—LED indicates that the disk is ready and can be accessed	7	LINK LED—Indicates MGMT Ethernet port activity
2	HDD Activity—LED indicates that the disk is currently being accessed	8	BF—Internal bootflash LED that indicates activity of the EUSB device
3	HDD Slot—Slot into which the HDD is inserted (the figure shows an HDD inserted into the slot)	9	USB LED
4	AUX—RS-232 auxiliary port	10	USB port—USB high-speed (480 Mbps) port used for secure key storage, VPN credentials storage, or bulk flash storage of image and configuration backup This USB port is an A port.
5	CON—RS-232 console port	11	STAT—Status LED
6	MGMT—RJ-45 10/100/1000 management Ethernet port	12	PWR—Power LED

• IDC-OC3POS

IDC-OC3POS can support two channels of OC3 (see the following image).

Figure 188: Cisco ASR 1001 Router with IDC-OC3POS

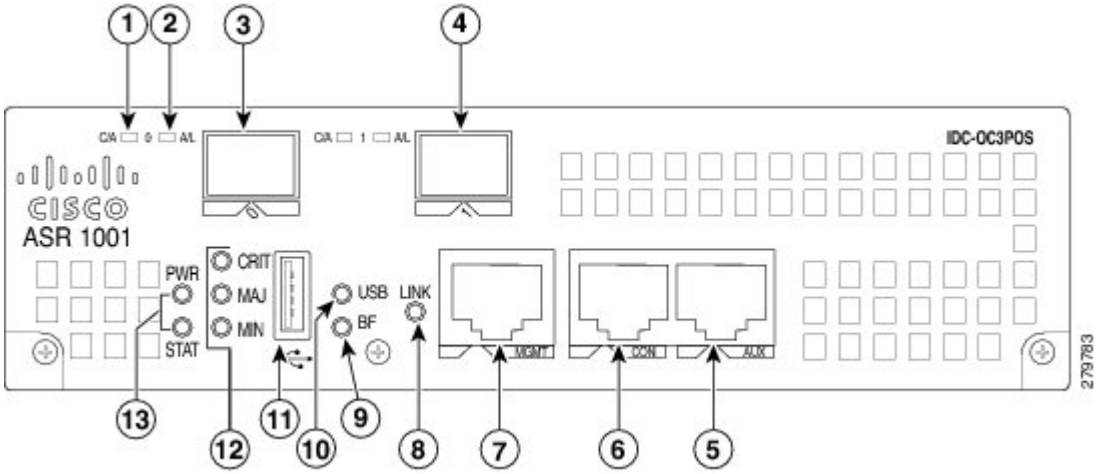

1	C/A—Carrier/Alarm LED	8	LINK LED—Indicates MGMT Ethernet port activity
2	A/L—Active/Loopback LED	9	BF—Internal bootflash LED that indicates activity of the EUSB device
3	POS OC3—Port 0 This POS port is a small form-factor pluggable (SFP) port.	10	USB LED
4	POS OC3—Port 1 This POS port is an SFP port.	11	USB port—USB high-speed (480 Mbps) port used for secure key storage, VPN credentials storage, or bulk flash storage of image and configuration backup This USB port is an A port.
5	AUX—RS-232 auxiliary port	12	STAT—Status LED
6	CON—RS-232 console port	13	PWR—Power LED
7	MGMT—RJ-45 10/100/1000 management Ethernet port	—	—

- IDC-4XGE

IDC-4XGE can support up to four small form-factor pluggable (SFP) transceivers, each of which supports a 1-Gigabit Ethernet connection (see the following image).

Figure 189: Cisco ASR 1001 Router with IDC-4XGE

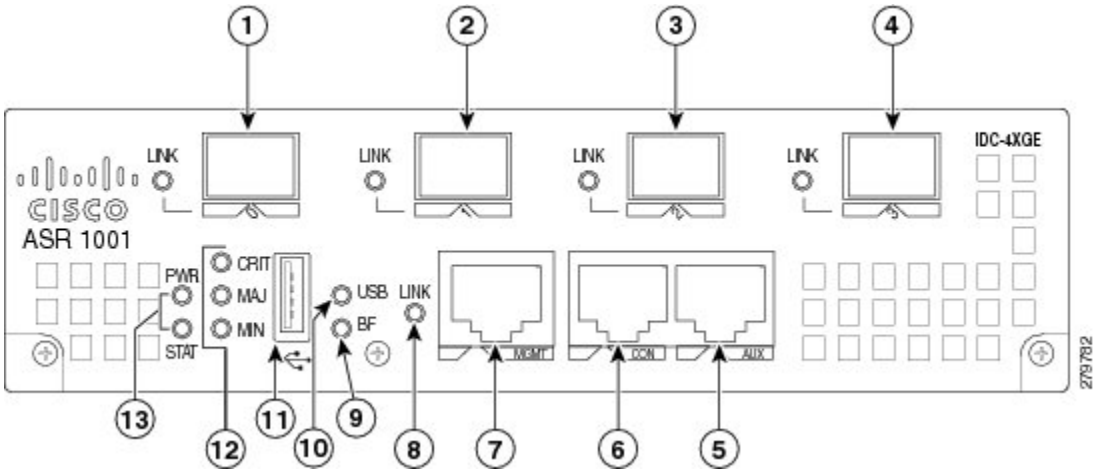

1	GigabitEthernet—Port 0 This POS port is an SFP port.	8	LINK LED—Indicates MGMT Ethernet port activity
2	GigabitEthernet—Port 1 This POS port is an SFP port.	9	BF—Internal bootflash LED that indicates activity of the EUSB device
3	GigabitEthernet—Port 2 This POS port is an SFP port.	10	USB LED
4	GigabitEthernet—Port 3 This POS port is an SFP port.	11	USB port—USB high-speed (480 Mbps) port used for secure key storage, VPN credentials storage, or bulk flash storage of image and configuration backup This USB port is an A port.
5	AUX—RS-232 auxiliary port	12	STAT—Status LED
6	CON—RS-232 console port	13	PWR—Power LED
7	MGMT—RJ-45 10/100/1000 management Ethernet port	—	—

- IDC-CHT1/E1

IDC-CHT1/E1 can support eight ports of fully channelized T1 or E1 interfaces (see Figure 190: Cisco ASR 1001 Router with IDC-CHT1/E1, on page 356).

Figure 190: Cisco ASR 1001 Router with IDC-CHT1/E1

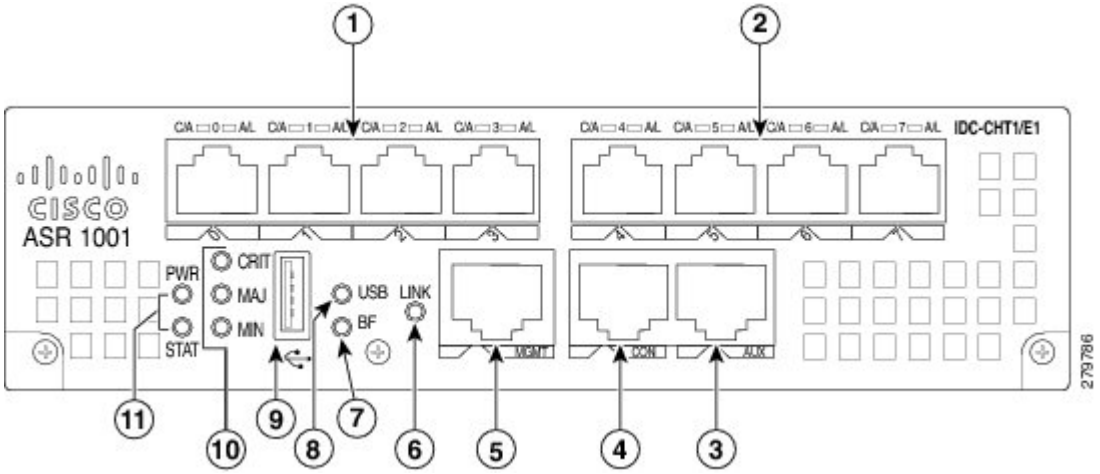

1	T1/E1 Ports—Ports 0 through 3 These T1/E1 ports are RJ-45 ports.	7	BF—Internal bootflash LED that indicates activity of the EUSB device
2	T1/E1 Ports—Ports 4 through 7 These T1/E1 ports are RJ-45 ports.	8	USB LED
3	AUX—RS-232 auxiliary port	9	USB port—USB high-speed (480 Mbps) port used for secure key storage, VPN credentials storage, or bulk flash storage of image and configuration backup This USB port is an A port.
4	CON—RS-232 console port	10	STAT—Status LED
5	MGMT—RJ-45 10/100/1000 management Ethernet port	11	PWR—Power LED
6	LINK LED—Indicates MGMT Ethernet port activity	—	—

- IDC-4XT3

IDC-4XT3 can support up to four unchannelized DS3 (44.736 Mbps) ports (see the following image).

Figure 191: Cisco ASR 1001 Router with IDC-4XT3

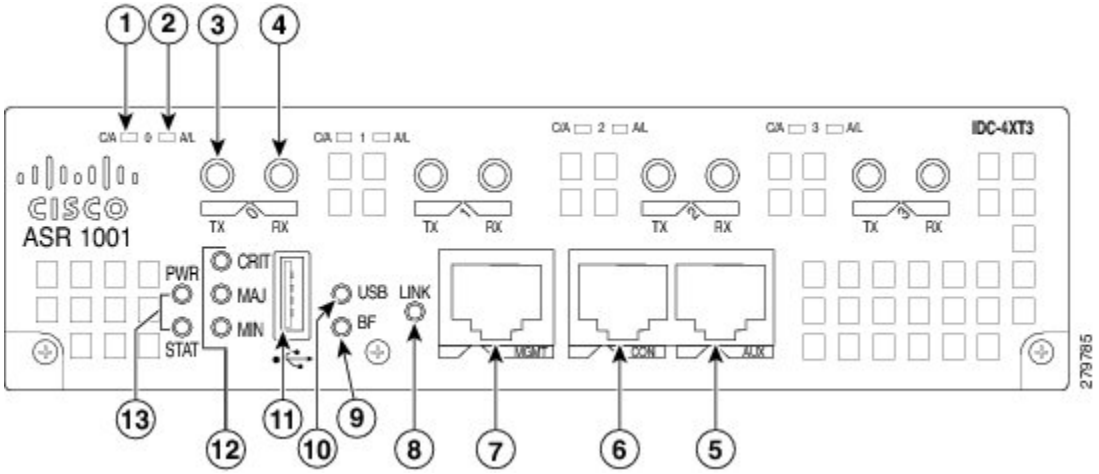

1	C/A—Carrier/Alarm LED	8	LINK LED—Indicates MGMT Ethernet port activity
2	A/L—Active/Loopback LED	9	BF—Internal bootflash LED that indicates activity of the EUSB device
3	T3 TX Port—Transmit port 0 This T3 port uses a 1.0/2.3 RF connector with 75-ohm impedance.	10	USB LED
4	T3 RX Port—Receive port 0 This T3 port uses a 1.0/2.3 RF connector with 75-ohm impedance.	11	USB port—USB high-speed (480 Mbps) port used for secure key storage, VPN credentials storage, or bulk flash storage of image and configuration backup This USB port is an A port.
5	AUX—RS-232 auxiliary port	12	STAT—Status LED
6	CON—RS-232 console port	13	PWR—Power LED
7	MGMT—RJ-45 10/100/1000 management Ethernet port	—	—

The following figures show the front panel of the Cisco ASR 1001 Router with the various IDCs. The following image shows the LEDs that are common to all configurations of the Cisco ASR 1001 Router.

Figure 192: Common LEDs for Cisco ASR 1001 Route Processor

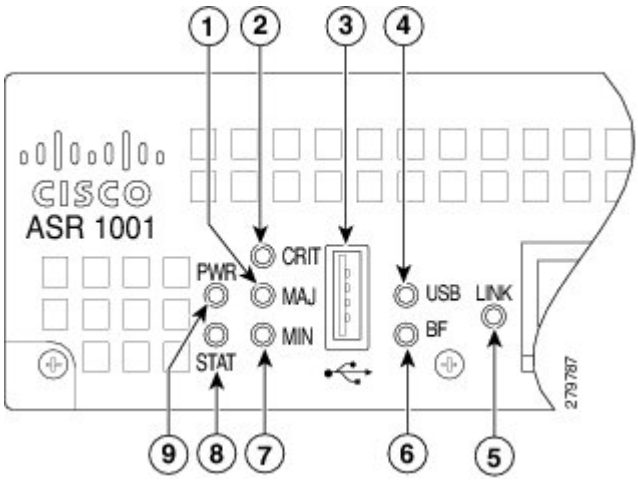

1	MAJ LED—major alarm indicator	6	BF—Internal bootflash LED indicates activity of the EUSB device
2	CRIT LED—critical alarm indicator	7	MIN LED —minor alarm indicator
3	USB port— one USB high-speed (480Mbps) port used for secure key storage, storing of VPN credentials, or bulk flash storage for image and configuration backup	8	STAT—status LED
4	USB LED	9	PWR—Power LED
5	LINK LED indicates MGMT Ethernet port activity	—	—

Note For detailed descriptions of the SPAs on which some of the IDCs are based, go to: http://www.cisco.com/en/US/products/ps6267/products_data_sheets_list.html

Note There are two field-replaceable units in the Cisco ASR 1001 chassis. They are the DIMMs and eUSB. In order to service the components in the chassis, you must remove the power supplies and the chassis cover. For instructions, see the "Removing and Replacing the Cisco ASR 1001 Router DIMM Memory Modules" and the "Remove and Replace the eUSB Device on the Cisco ASR 1001 Router" sections in the *Removing and Replacing FRUs from the Cisco ASR 1000 Series Routers* chapter.

Cisco ASR 1001 Router Faceplate Common Components

The Cisco ASR 1001 Router RP faceplate has common components for each type of ASR 1001 Router configuration. The preceding image and the following image show the Cisco ASR1000-RP faceplate with LEDs and connectors for all configurations of the Cisco ASR 1001 Router.

Figure 193: Common Connectors for Cisco ASR 1001 Route Processor

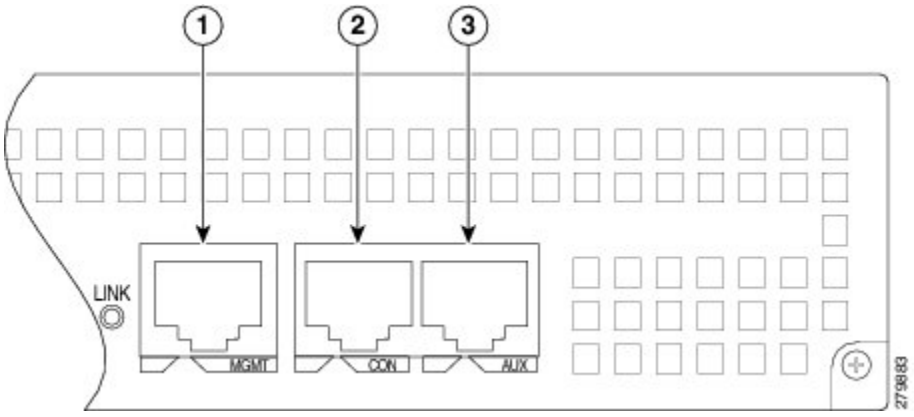

1	MGMT—One RJ-45 10/100/1000 management Ethernet port	3	AUX—One RS-232 auxiliary port
2	CON—One RS-232 console port	—	—

Cisco ASR 1001 Chassis Front View

The following image shows the front of the Cisco ASR 1001 Router.

Figure 194: Cisco ASR 1001 Router Front View

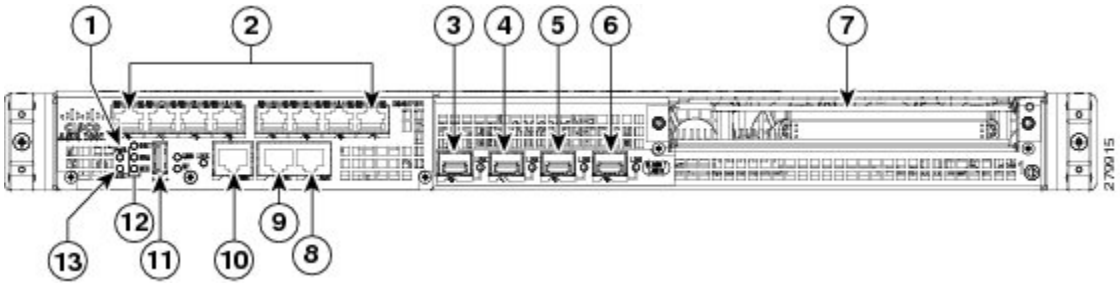

1	PWR—Power LED	8	AUX—one RS-232 auxiliary port
2	Integrated daughter card I/O space	9	CON—one RS-232 console port
3	GE 2/0 and 0/0—The built-in GE ports use industry standard front-panel removable SFP optics and SFP copper interfaces.	10	MGMT —one RJ-45 10/100/1000 management Ethernet port
4	GE 2/1 and 0/1	11	USB port
5	GE 2/2 and 0/2	12	CRIT LED—critical alarm indicator MAJ LED—major alarm indicator MIN LED —minor alarm indicator
6	GE 2/3 and 0/3	13	STAT—status LED

7	One half-height SPA Bay 1	—	Bottom slot of chassis is Bay 0

Cisco ASR 1001 Chassis Rear View

The following ima shows the rear of the Cisco ASR 1001 Router with seven fans and two AC or DC power supplies.

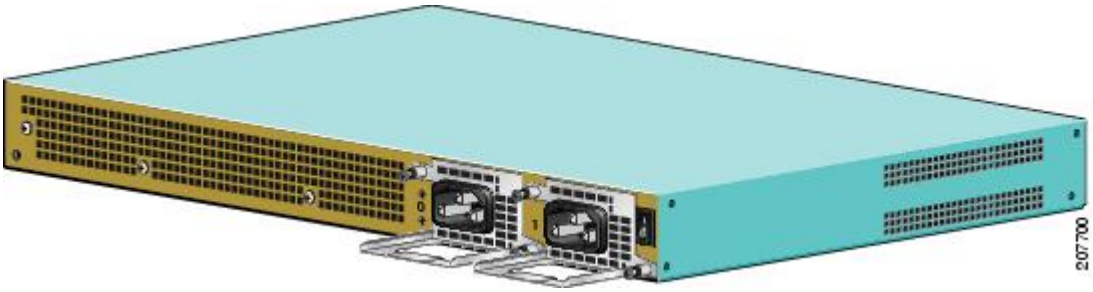

Seven internal fans draw cooling air into the chassis and across internal components to maintain an acceptable operating temperature. The fans are located at the rear of the chassis. A two-hole grounding lug is located on the side of the chassis. Each individual fan also has a fan fail status signal. The fan fail signal is asserted if the fan speed falls below 50% of the rated speed. The fans are numbered from zero (0) to 6, left to right.

Two power supplies, either two AC power supplies or two DC power supplies are accessed from the rear of the router.

Cisco ASR 1001 Router Slot Numbering

The SPA bay numbering scheme for Cisco ASR 1001 Router is different from the Cisco ASR 1000 SIP card. The SPA ordering is: Built-in GE ports (SPA 0), SPA Bay 1 (SPA 1), and I/O Board (SPA 2).

The integrated daughter card is not necessarily a SPA; it could be any I/O, such as a harddrive or USB. When the daughter card is not a SPA, then SPA Bay 2 will be left blank and not present in the system.

The built-in GE ports are logically SPA bay 0 and will be addressed as GE 0/0/x. The half-height SPA slot is logically SPA bay 1 and ports will be addressed as 0/1/x. Ports on the integrated daughter card are logically in SPA bay 2 and will be addressed as 0/2/x.

The following image shows slot numbering for the Cisco ASR 1001 Router.

Figure 195: Cisco ASR 1001 Router Slot Numbering

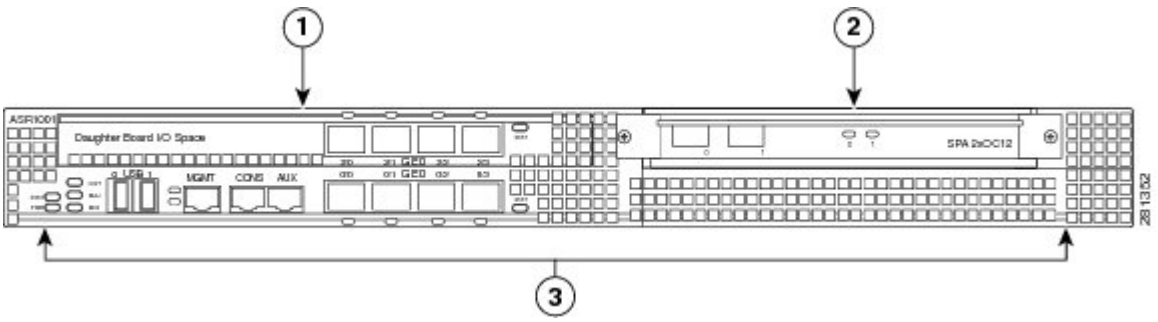

1	Slot 2 connected to the flexible integrated daughter card	3	Slot 0 connected to the built-in 4x1GE SPA on the mainboard
2	Slot 1 connected to the half-height SPA slot	—	—

Cisco ASR 1001 Router Components

The Cisco ASR 1001 Router system is derived from the architecture of the other Cisco ASR 1000 Series routers. The Cisco ASR 1001 Router contains a single mainboard that provides all the functions of a Cisco ASR1000-RP (route proce4ssor), a Cisco ASR1000-SIP (carrier card), and a Cisco ASR1000-ESP (forwarding processor). This mainboard assembly also contains a built-in 4x1 GE SPA providing four SFP ports. The Cisco ASR1000-RP section of the mainboard provides all the traditional management interfaces (Ethernet, Console, Aux) and a storage interface (USB only). The Cisco ASR1000-SIP section provides one half-height SPA bay and a supports a flexible integrated daughter card. The Cisco ASR1000-ESP section provides a CPP based forwarding engine including a security coprocessor.

The main components of the Cisco ASR 1001 Router, ASR1000-RP1, ASR1000-ESP5, and ASR1000-SIP10 are fixed in the chassis and are not upgradeable, except for the power supplies and SPAs.

Cisco Embedded ASR1000-RP1 for Cisco ASR 1001 Router Description

The Cisco ASR 1000 Series route processor (embedded for the Cisco ASR 1001 Router) is the central control processor and runs the network operating system.

The Cisco embedded ASR1000-RP1 supports management interfaces such as the Ethernet network management port and console and auxiliary serial ports. It has LED status indicators and one USB port that can be used with smart cards for either secure key distribution or image or configuration file updates.

The Cisco embedded ASR1000-RP1 deviates from the other ASR Series Route Processor 1 for the Cisco ASR 1006 router and the Cisco ASR 1004 Router in the following ways:

- Bulk file storage is on a large eUSB device (to 8 GB supported) with no SATA hard-drive supported.
- Redundant Cisco route processor is not supported.
- Network clock changes. No second BITS clock input supported.
- A built-in 4xGE SPA is included. This shared port adapter provides four SFP-based GE connections.

The Cisco route processor common LEDs and indicators are shown in the “Common LEDs for Cisco ASR 1001 Route Processor” figure in the *Cisco ASR 1001 Router Architecture* section. The following table describes the Cisco ASR 1000 Series Route Processor LEDs.

Table 83: Cisco ASR 1001 Series Route Processor LEDs

LED Label	LED	Color—State	Behavior Description
PWR	Power	Solid green	All power requirements are within specification
		Off	Off. The router is in standby mode.

LED Label	LED	Color—State	Behavior Description
STAT	System status	Solid green	Cisco IOSD and other required processes have loaded successfully and are operating.
		Yellow	ROMMON is running (including a permanent failure of RP software) or the Process Manager has declared a critical RP process (including IOSD) dead. A user can log in to recover.
		Red	Occurs during system failure or power-up.
CRIT	Critical	Solid Red	Functions as a critical alarm indicator. The LED is lso a solid red during the boot process.
MAJ	Major	Solid Red	Major alarm indicator.
MIN	Minor	Amber	Minor alarm indicator.
BOOT	Internal eUSB bootflash LED	Green	Activity indicator.
LINK	10/100/1000 Interface LED	Solid green	Link with no activity.
		Flashing Green	MGMT Ethernet port activity.
		Off	No link.

Cisco Embedded ASR1000-SIP10 and SPAs for the Cisco ASR 1001 Router Description

The Cisco embedded ASR1000-SIP10 is built into the Cisco ASR 1001 Router. The Cisco embedded ASR1000-SIP10 provides the physical and electrical termination for up to three SPAs, built-in 4xGE SPA, one half-height SPA bay, and one integrated daughter card (system configurable).

The Cisco embedded ASR1000-SIP10 interface, like the Cisco ASR 1006 Router and Cisco ASR 1004 Router, supports all Cisco embedded ASR1000-SIP10 functions and services. However, the Cisco embedded ASR1000-SIP10 differs in the following areas:

- Functions as the base board for Cisco embedded ASR1000-RP1
- Is not a field-replaceable unit (FRU) and does not support online insertion and removal (OIR).

Note Only the shared port adapter (SPA) on the Cisco embedded ASR1000-SIP10 in SPA Bay 1 of the Cisco ASR 1001 Router supports OIR.

The Cisco ASR 1001 Router embedded ASR1000-RP1 also provides the circuitry for the built-in 4xGE SPA. Table 84: Built-In SPA LEDs , on page 363 describes the built-in SPA LEDs.

Table 84: Built-In SPA LEDs

Function	Color	Description
GE SFP STATUS (one per port)	Amber	Indicates that the port is enabled by software, but there is a problem with the Ethernet link.
	Green	Indicates that the port is enabled by software and there is a valid Ethernet link.

Cisco ASR 1001 Router Integrated Daughter Card Description

The ASR 1001 Router supports different flexible integrated daughter cards with their own LEDs. Four of these integrated daughter cards are based on SPAs and use the same external I/O ports as those SPAs. One of the integrated daughter cards supports a single hard-disk-drive for other applications.

Table 85: Built-In SPA LEDs, on page 363 describes the built-in SPA LEDs.

Table 85: Built-In SPA LEDs

Function	Color	Description
Daughter Card Port Status (one per port)	Amber	Amber indicates the port is enabled by software, but there is a problem with a port connection.
	Green	Green indicates the port is enabled by software and operational.

Cisco ASR1000-ESP for the Cisco ASR 1001 Router Description

The Cisco ASR 1001 Router supports the Cisco ASR1000-ESP2.5 and Cisco ASR1000-ESP5 (with license) embedded services processors.

Table 86: Cisco ASR 1001 LEDs, on page 363 describes the Cisco ASR 1001 LEDs.

Table 86: Cisco ASR 1001 LEDs

No.	LED Label	LED	Color	Behavior Description
1	PWR	Power	Solid green	All power supplies are within operational limits.
			Off	Off. The router is in standby mode.
2	ACTV	Active	Green	The embedded services processor is green when active.
3	STAT	STATUS	Green	Code has downloaded successfully and is operational.
			Yellow	BOOT ROM has loaded successfully.
			Red	Not booted.
4	STBY	Standby	None	Will always be off.

You can upgrade the throughput of the ESP from 2.5 Gbps to 5 Gbps by applying a software-activated performance upgrade license and then reloading the router. If you want to determine the current throughput level of the ESP, run the **show platform hardware throughput level** command. The following example shows the output of this command before the performance upgrade license is applied:

```
Router# show platform hardware throughput level

The current throughput level is 2500000 kb/s
```

The following example shows the output of this command after the performance upgrade license is applied:

```
Router# show platform hardware throughput level
The current throughput level is 5000000 kb/s
```

For more information about the software-activated performance upgrade license, see the *Cisco ASR 1000 Series Aggregation Services Routers Release Notes* at the following location:

http://www.cisco.com/en/US/docs/routers/asr1000/release/notes/asr1k_rn_rel_notes.html

Power Supplies in the Cisco ASR 1001 Router

The Cisco ASR 1001 Router power supply module supports the following Cisco power supplies:

- AC power supply operates between 85 to 264 VAC
- –48 VDC power supply input range supported is -40.5 to -72 VDC.

The power supply generates +12 V and +5 V, which is distributed to the mainboard and fans. The +5 V is used to operate the power control devices. It also provides an operational +5 V, as needed.

The power supply units contain one or two fans that are only used for cooling the power supply. Each power supply is self contained and controls its own fan speed and fan redundancy.

The power supplies are hot pluggable from the rear of the chassis and can be removed or installed while the system is operating, without affecting any aspect of system performance. The Cisco ASR 1001 Router supports up to seven chassis-mounted cooling fans. Each fan provides an alarm output for error indication speed measurement. The fans are not field replaceable, but the system can meet the cooling requirements in the event of a single-fan failure.

AC Power Supply for Cisco ASR 1001 Router

The AC power supply input inlet is an IEC connector. The current rating on the connector is 10 A. The AC power supply is secured into the chassis with two captive screws mounted on the faceplate.

The following image shows the AC power supply for the Cisco ASR 1001 Router.

Figure 196: AC Power Supply for the Cisco ASR 1001 Router



--48 VDC Power Supply for Cisco ASR 1001 Router

The –48 VDC power supply input connector accepts a Euro-style terminal block. It is compliant with safety agencies' guidelines and electrical requirements of the supply. The DC power supply operates within specification from –40.5 to –72 VDC continuously once the power supply DC input reaches the threshold of –43.5 V.

The –48 VDC power input connector Euro-style terminal block will accept three wires: one positive polarity, one negative polarity, and one ground wire. The connection order is negative (–), positive (+), and GND. The DC power supply is secured into the system chassis with two captive screws mounted on the faceplate.

The following image shows the –48 VDC power supplies for the Cisco ASR 1001 Router.

Figure 197: –48 VDC Power Supply for the Cisco ASR 1001 Router

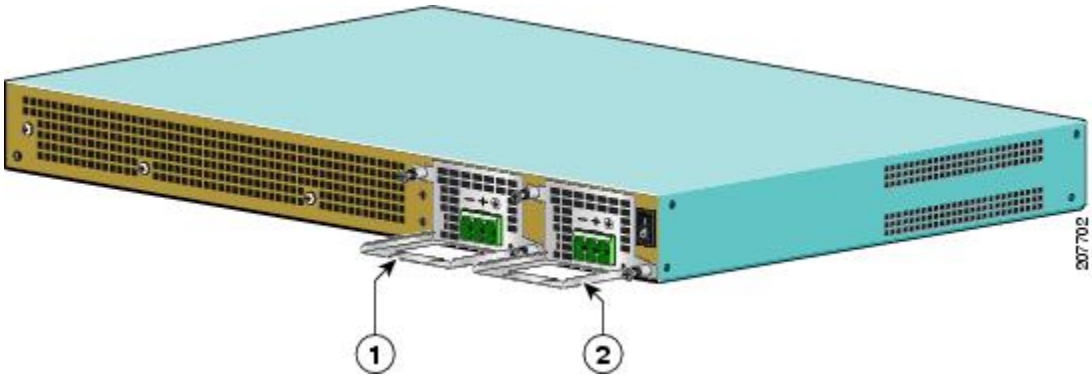

The output voltage alarm is declared when the output voltage is below the low end of the minimum or above the high end of the maximum limits. When the output voltage is above the high end of the minimum or below the low end of the maximum limits, the red state will not be activated.

The following table shows the –48 VDC power supply output voltage alarm ranges.

Table 87: –48 VDC Power Supply Output Voltage Alarm Threshold Ranges

Output	Minimum	Maximum
12V	10.0-11.2V	12.8-13.8V
3.3V	2.6 - 3.0 V	None

Power Cords Supported by the Cisco ASR 1001 Router

The following table lists the power cords that are supported by the Cisco ASR 1001 Router.

Table 88: Power Cords Supported by the Cisco ASR 1001 Router

Power Cord Item Number	Description
15454-M-ACCBL-R2	AC Power Cable ANSI 220VAC Right Exit
CAB-AC-RA	Power Cord, 110 V, Right Angle
CAB-ACA-RA	Plug, Power Cord, Australian, 10 A, Right Angle
CAB-ACC-RA	Power Cord China, Right Angle
CAB-ACE-RA	Power Cord Europe, Right Angle
CAB-ACI-RA	Power Cord, Italian, Right Angle
CAB-ACR-RA	Power Cord Argentina, Right Angle
CAB-ACS-RA	Power Cord, Switzerland, Right Angle
CAB-ACU-RA	Power Cord UK, Right Angle
CAB-IND-RA	Power Cord India, Right Angle
CAB-JPN-RA	Power Cord-Japan, Right Angle

Installation Methods

Cisco ASR 1001 Router is designed for standalone, two rail 19-inch rack-mount (front rail only), four rail 19-inch rack-mount (front and rear rail).

Although rack-mounting is the preferred method of installation for the Cisco ASR 1001 Router, you can mount the chassis on an equipment shelf or tabletop.



Warning This warning symbol means danger. You are in a situation that could cause bodily injury. Before you work on any equipment, be aware of the hazards involved with electrical circuitry and be familiar with standard practices for preventing accidents. Use the statement number provided at the end of each warning to locate its translation in the translated safety warnings that accompanied this device. Statement 1071



Warning Before you install, operate, or service the system, read the *Regulatory Compliance and Safety Information for Cisco ASR 1000 Series Aggregation Services Routers* publication. This document provides important safety information you should know before working with the system. Statement 200

Note You have already unpacked your chassis and read all the site requirements for your new equipment. Proceed with the installation.

General Rack Installation Guidelines

When planning your rack installation, consider the following guidelines:

- The Cisco ASR 1001 Router requires a minimum of 3.5 inches or 8.9 cm rack units of vertical rack space. Measure the proposed rack location before mounting the chassis in the rack.
- Before using a particular rack, check for obstructions (such as a power strip) that could impair rack-mount installation. If a power strip does impair a rack-mount installation, remove the power strip before installing the chassis, and then replace it after the chassis is installed.
- Allow sufficient clearance around the rack for maintenance. If the rack is mobile, you can push it back near a wall or cabinet for normal operation and pull it out for maintenance (installing or moving cards, connecting cables, or replacing or upgrading components). Otherwise, allow 19 inches (48.3 cm) of clearance to remove field-replaceable units.
- Maintain a minimum clearance of 3 inches on the front and back sides of the chassis for the cooling air inlet and exhaust ports, respectively. Avoid placing the chassis in an overly congested rack or directly next to another equipment rack; otherwise, the heated exhaust air from other equipment can enter the inlet air vents and cause an overtemperature condition inside the router.

Caution To prevent chassis overheating, never install a Cisco ASR 1001 Router in an enclosed room that is not properly ventilated or air conditioned.

- Always install heavier equipment in the lower half of a rack to maintain a low center of gravity to prevent the rack from falling over.
- Install and use the cable-management brackets included with the Cisco ASR 1001 Router to keep cables organized and out of the way of the cards and processors. Ensure that cables from other equipment already installed in the rack do not impair access to the cards or require you to disconnect cables unnecessarily to perform equipment maintenance or upgrades.
- Install rack stabilizers (if available) before you mount the chassis.
- Provide an adequate chassis ground (earth) connection for your router chassis.

In addition to the preceding guidelines, review the precautions for avoiding excessive temperature conditions in the “Site Environmental Requirements” section in the *Preparing Your Site for Installation* chapter.

The following table provides the Cisco ASR 1001 Router dimensions and weight information.

Table 89: Cisco ASR 1001 Router Dimensions and Weight

Cisco ASR 1001	Dimensions
Depth	22.50 in. (57.15 cm)

Cisco ASR 1001	Dimensions
Height	1.71 in. (43.43 mm) - 1RU rack-mount
Width	17.25 in. (43.815 cm) - 19 inch rack-mount
Weight	40 lb (18.143 k) - fully configured

Guidelines for an Equipment Shelf or Tabletop Installation

The chassis should already be in the area where you will install it. If you have not determined where to install your chassis, see the *Cisco ASR 1000 Series Routers Component Overview* chapter for information about site considerations.

If you are not rack-mounting your Cisco ASR 1000 series chassis, place it on a sturdy equipment shelf or tabletop.

When installing the Cisco ASR 1001 Router on an equipment shelf or tabletop, ensure that the surface is clean and that you have considered the following:

- The Cisco ASR 1001 Router requires at least 3 inches (7.62 cm) of clearance at the inlet and exhaust vents (the front and top/rear sides of the chassis).
- The Cisco ASR 1001 Router should be installed off the floor. Dust that accumulates on the floor is drawn into the interior of the router by the cooling fans. Excessive dust inside the router can cause overtemperature conditions and component failures.
- There must be approximately 19 inches (48.3 cm) of clearance at the front and rear of the chassis to install and replace FRUs, or to access network cables and equipment.
- The Cisco ASR 1001 Router needs adequate ventilation. Do not install it in an enclosed cabinet where ventilation is inadequate.
- Keep the cable-management bracket ready if you plan to install it on the front of the chassis.
- An adequate chassis ground (earth) connection exists for your router chassis (see the Attaching a Chassis Ground Connection).
- Always follow proper lifting practices as outlined in the “Electrical Safety” section in the *Preparing Your Site for Installation* chapter, when handling the chassis.

Mounting the Cisco ASR 1001 Router on an Equipment Shelf or Tabletop Installation

To mount your Cisco ASR 1001 Router on an equipment shelf or tabletop, follow these steps.

SUMMARY STEPS

1. Remove any debris and dust from the tabletop or platform, as well as the surrounding area.
2. Lift the chassis into position on the equipment shelf or tabletop.

3. Attach the front rack-mount brackets. Locate the threaded holes in the front sides of the chassis (first holes beyond the vent holes) and use the package of black screws that shipped with the chassis.
4. Align the front rack-mount bracket to one side of the chassis.
5. Insert and tighten the screws on one side.
6. Repeat Step 2 through Step 3 on the other side of the chassis. Use all screws to secure the rack-mount brackets to the chassis.
7. Gather the two cable-management brackets and screws shipped with your chassis. The following image shows cable-management brackets attached on the front of the Cisco ASR 1001 Router.
8. Screw the cable-management bracket to each side of the rack-mount brackets that are attached to the chassis. Use two screws for each cable-management bracket. Use a screw from the package of four screws.
9. Check that all screws are securely tightened.
10. Go to the Attaching a Chassis Ground Connection for instructions about continuing the installation.

DETAILED STEPS

Step 1 Remove any debris and dust from the tabletop or platform, as well as the surrounding area.

Step 2 Lift the chassis into position on the equipment shelf or tabletop.

Warning At least two people are required to lift the chassis onto a tabletop or platform. To prevent injury, keep your back straight and lift with your legs, not your back. Statement 164

Step 3 Attach the front rack-mount brackets. Locate the threaded holes in the front sides of the chassis (first holes beyond the vent holes) and use the package of black screws that shipped with the chassis.

Step 4 Align the front rack-mount bracket to one side of the chassis.

Step 5 Insert and tighten the screws on one side.

Step 6 Repeat Step 2 through Step 3 on the other side of the chassis. Use all screws to secure the rack-mount brackets to the chassis.

Note The chassis rack-mount brackets must be installed first so that you can attach the cable-management brackets to the chassis rack-mount brackets after the chassis is installed in the rack.

Step 7 Gather the two cable-management brackets and screws shipped with your chassis. The following image shows cable-management brackets attached on the front of the Cisco ASR 1001 Router.

Note Make certain that the cable-management ‘U’ feature device has the open end pointing upwards when you attach it to the chassis.

Figure 198: Attaching the Cable-Management Brackets to the Cisco ASR 1001 Router

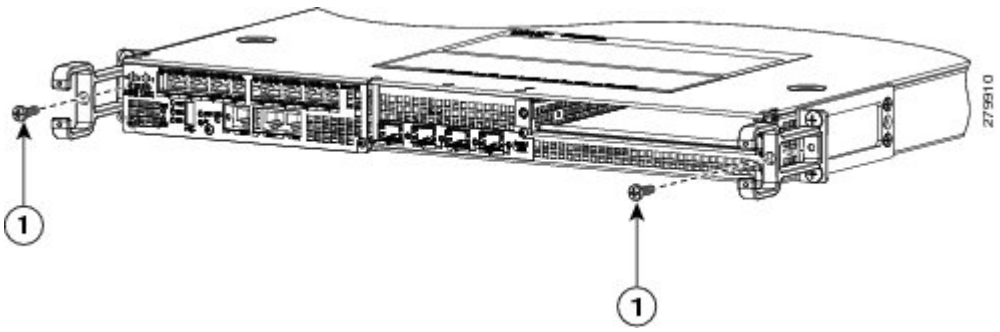

1	Cable-management bracket top and bottom screws	3	Chassis front rack-mount bracket
2	Cable-management bracket	—	—

Step 8 Screw the cable-management bracket to each side of the rack-mount brackets that are attached to the chassis. Use two screws for each cable-management bracket. Use a screw from the package of four screws.

Step 9 Check that all screws are securely tightened.

Step 10 Go to the Attaching a Chassis Ground Connection for instructions about continuing the installation.

Rack-Mounting the Cisco ASR 1001 Router

The Cisco ASR 1001 Router can be installed in an existing rack with equipment or in an empty rack with no equipment: The chassis can be mounted in either rack types:

- Two-post rack, either 19 inch or 23 inch. Inner clearance (the width between the inner sides of the two posts or rails) must be at least 19 inches (48.26 cm). The height of the chassis is 3.47 inches (8.8 cm). Airflow through the chassis is from front to back.

Note If you are using a two-post rack secure the rack to the floor surface to prevent tipping and avoid bodily.

- Four post, 19-inch equipment rack. Inner clearance (the width between the inner sides of the two posts or rails) must be at least 19 inches (48.26 cm). The height of the chassis is 1.71 inches (43.43 mm). Airflow through the chassis is from front to back.

Note When handling the chassis, always follow proper lifting practices. See the “Chassis-Lifting Guidelines” section in the *Preparing Your Site for Installation* chapter.

The Cisco ASR 1001 Router can be installed with both front or rear rack-mount brackets.

Verifying Rack Dimensions

Before you install the chassis, measure the space between the vertical mounting flanges (rails) on your equipment rack to verify that the rack conforms to the measurements shown in the following image.

Figure 199: Verifying Equipment Rack Dimensions

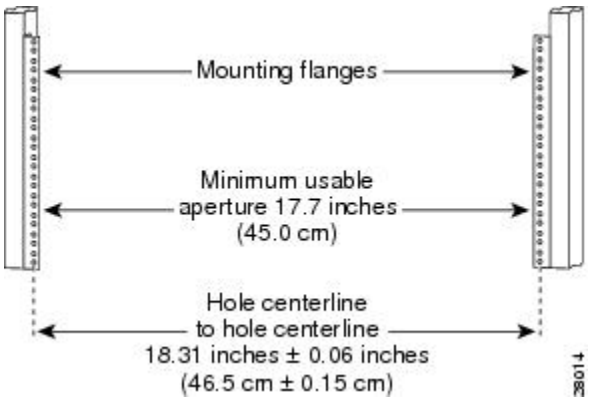

SUMMARY STEPS

1. Mark and measure the distance between two holes on the left and right mounting rails.
2. Measure the space between the inner edges of the left front and right front mounting flanges on the equipment rack.

DETAILED STEPS

Step 1 Mark and measure the distance between two holes on the left and right mounting rails.

The distance should measure 18.31 inches ± 0.06 inches (46.5 cm ± 0.15 cm).

Note Measure for pairs of holes near the bottom, middle and top of the equipment rack to ensure that the rack posts are parallel.

Step 2 Measure the space between the inner edges of the left front and right front mounting flanges on the equipment rack.

The space must be at least 17.7 inches (45 cm) to accommodate the chassis which is 17.25 inches (43.8 cm) wide and fits between the mounting posts on the rack.

Attaching the Chassis Rack-Mount Brackets

This section explains how to attach the front rack-mount brackets to the chassis. Before installing the chassis in the rack, you must install the rack-mount brackets on each side of the chassis.

The parts and tools required for installing the rack-mount brackets and cable-management brackets are listed in the “Tools and Equipment” section in the *Preparing Your Site for Installation* chapter..

Note The Cisco ASR 1001 Router also has a set of threaded features in the rear of the chassis to accommodate a set of rear mounting brackets, should the requirement arise.

Note The cable-management brackets are attached to the chassis after you install the chassis rack-mount brackets on the chassis and mount the chassis in the rack.

Chassis Front Rack-Mount Brackets

Determine where in the rack you want the chassis to be mounted. If you are mounting more than one chassis in the rack, then start from the bottom up or the center of the rack. Figure 200: Attaching the Front Rack-Mount Brackets to the Cisco ASR 1001 Router, on page 372shows the brackets attached to the chassis. Depending on the bracket holes you use, the chassis may protrude in the rack.

To install the front rack-mount brackets on the Cisco ASR 1001 Router, perform the following steps:

SUMMARY STEPS

1. Locate the threaded holes on the side of the chassis. Make certain that you hold the front rack-mount bracket with the ear and holes facing outward and towards the front of the chassis.
2. Position the front rack-mount bracket top hole with the chassis first top hole behind the side vent holes.
3. Insert and tighten the black screws on one side.
4. Repeat Step 1 through Step 3 on the other side of the chassis. Use black screws to secure the rack-mount brackets to the chassis.

DETAILED STEPS

Step 1 Locate the threaded holes on the side of the chassis. Make certain that you hold the front rack-mount bracket with the ear and holes facing outward and towards the front of the chassis.

The following image shows where to attach the front rack-mount brackets to the Cisco ASR 1001 Router.

Figure 200: Attaching the Front Rack-Mount Brackets to the Cisco ASR 1001 Router

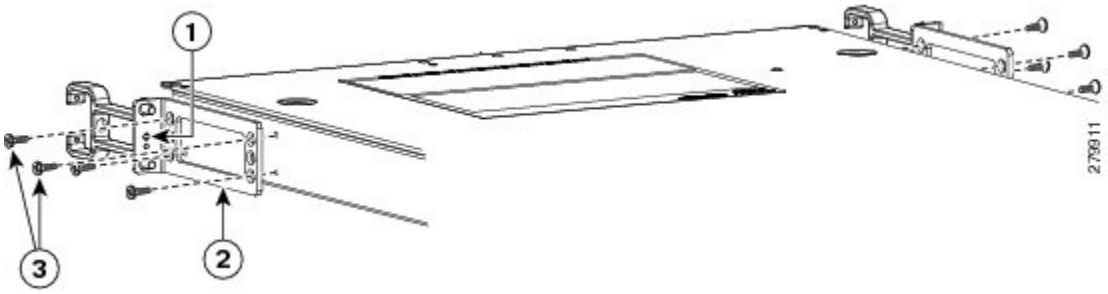

1	Front rack-mount bracket ear and holes	3	Front rack-mount bracket screws
2	Front rack-mount bracket	—	—

Step 2 Position the front rack-mount bracket top hole with the chassis first top hole behind the side vent holes.

Step 3 Insert and tighten the black screws on one side.

Step 4 Repeat Step 1 through Step 3 on the other side of the chassis. Use black screws to secure the rack-mount brackets to the chassis.

What to do next

This completes the steps for attaching the front rack-mount brackets to the Cisco ASR 1001 Router.

Installing the Cisco ASR 1001 Router in a Rack

After installing the rack-mount brackets on the chassis, you mount the chassis by securing the rack-mount brackets to two posts or mounting strips in the rack using the screws provided. Because the rack-mount brackets support the weight of the entire chassis, be sure to use all screws to fasten the two rack-mount brackets to the rack posts.



Note To prevent bodily injury when mounting or servicing this unit in a rack, you must take special precautions to ensure that the system remains stable. The following guidelines are provided to ensure your safety:

- This unit should be mounted at the bottom of the rack if it is the only unit in the rack.When mounting this unit in a partially filled rack, load the rack from the bottom to the top with the heaviest component at the bottom of the rack.
- If the rack is provided with stabilizing devices, install the stabilizers before mounting or servicing the unit in the rack. Statement 1006

We recommend that you allow at least 1 or 2 inches (2.54 or 5.08 cm) of vertical clearance between the router and any equipment directly above and below it.

To install the chassis in the rack, perform the following steps:

SUMMARY STEPS

1. On the chassis, ensure that all screw fasteners on the installed components are securely tightened.
2. Make sure that your path to the rack is unobstructed. If the rack is on wheels, ensure that the brakes are engaged or that the rack is otherwise stabilized. See the next sections on the types of racks you can use to install the chassis.
3. (Optional) Install a shelf in the rack to support the Cisco ASR 1001 Router. If you use a shelf, this will help support the chassis while you secure it to the rack.
4. With two people, lift the chassis into position between the rack posts.
5. Align the mounting bracket holes with the rack post holes and attach the chassis to the rack.
6. Position the chassis until the rack-mounting flanges are flush against the mounting rails on the rack.
7. Hold the chassis in position against the mounting rails in the equipment rack and follow these steps:
8. Tighten all screws on each side to secure the chassis to the equipment rack.

DETAILED STEPS

Step 1 On the chassis, ensure that all screw fasteners on the installed components are securely tightened.

Step 2 Make sure that your path to the rack is unobstructed. If the rack is on wheels, ensure that the brakes are engaged or that the rack is otherwise stabilized. See the next sections on the types of racks you can use to install the chassis.

Step 3 (Optional) Install a shelf in the rack to support the Cisco ASR 1001 Router. If you use a shelf, this will help support the chassis while you secure it to the rack.

Step 4 With two people, lift the chassis into position between the rack posts.

Step 5 Align the mounting bracket holes with the rack post holes and attach the chassis to the rack.

Note If you are using a shelf then raise the chassis to the level of the shelf. Let the bottom of the chassis rest on the brackets, but continue to support the chassis.

Step 6 Position the chassis until the rack-mounting flanges are flush against the mounting rails on the rack.

Tip To allow space to attach the cable-management brackets to the chassis in the rack easily, use the rack-mount bracket ear holes mentioned in Steps 7 and 8.

Step 7 Hold the chassis in position against the mounting rails in the equipment rack and follow these steps:

a) Insert the bottom screw into the second hole up from the bottom of the rack-mount ear and use a hand-held screwdriver to tighten the screw to the rack rail.

Tip To make installation easier, insert one screw at the bottom of the chassis and the next screw at the top of the chassis diagonally from the first screw.

b) Insert the top screw into the second hole from the top of the rack-mount ear diagonally from the bottom screw and tighten the screw to the rack rail.

c) Insert the four screws to secure the chassis to the rack equipment.

Tip By using the specified rack-mount bracket ear holes, the cable-management bracket can be easily attached to the rack-mount bracket when the chassis is in the rack.

Step 8 Tighten all screws on each side to secure the chassis to the equipment rack.

Two-Post Rack Installation

The Cisco ASR 1001 Router can be installed on a two-post rack, either 19 inch or 23 inch.

Note Inner clearance (the width between the inner sides of the two posts or rails) must be at least 19 inches (48.26 cm). The height of the chassis is 1.71 inches (43.43 mm). Airflow through the chassis is from front to back.

Caution If you are using a two-post rack secure the rack to the floor surface to prevent tipping and avoid bodily injury and component damage.

SUMMARY STEPS

1. Position the chassis so the front is closest to you and lift it carefully into the rack. To prevent injury, avoid any sudden twists or moves.

2. Slide the chassis into the rack, pushing it back until the brackets meet the mounting strips or posts on both sides of the rack.
3. Keeping the brackets flush against the posts or mounting strips, align the holes in the brackets with the holes on the rack or mounting strip.
4. For each bracket, insert and tighten two screws to the rack on both sides.

DETAILED STEPS

Step 1 Position the chassis so the front is closest to you and lift it carefully into the rack. To prevent injury, avoid any sudden twists or moves.

The following image shows the Cisco ASR 1001 Router on a two-post equipment rack.

Figure 201: Cisco ASR 1001 Router Installed on a Two-Post Equipment Rack

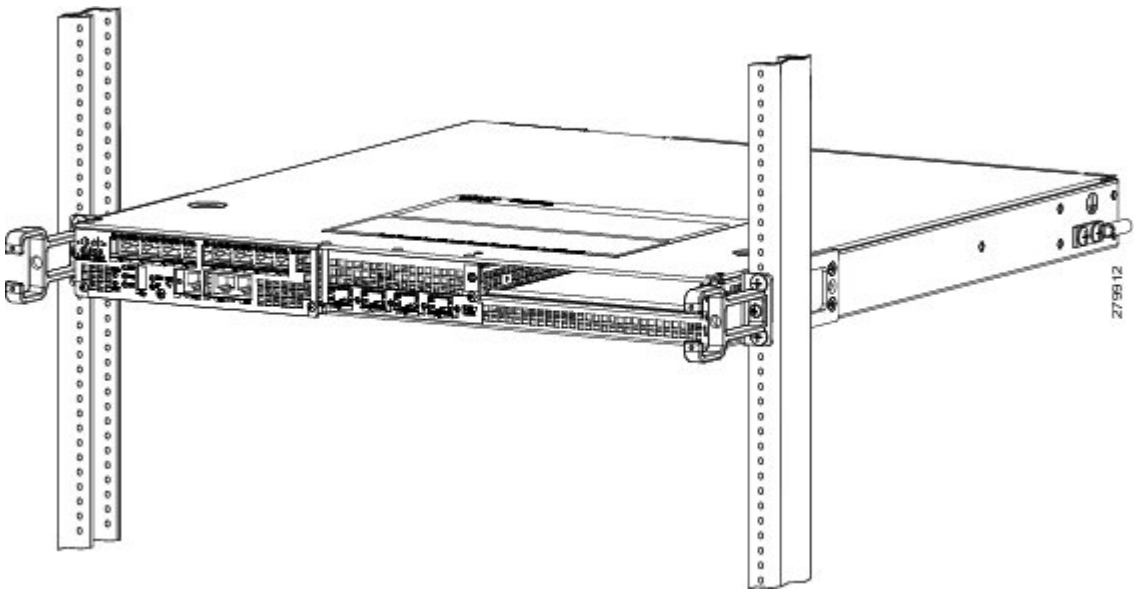

Step 2 Slide the chassis into the rack, pushing it back until the brackets meet the mounting strips or posts on both sides of the rack.

Step 3 Keeping the brackets flush against the posts or mounting strips, align the holes in the brackets with the holes on the rack or mounting strip.

Step 4 For each bracket, insert and tighten two screws to the rack on both sides.

This completes the procedure for installing the chassis on a two-post rack. Proceed to the Attaching a Chassis Ground Connection, on page 378 to continue the installation.

Four-Post Rack Installation

The Cisco ASR 1001 Router can be flush-mounted in a 19-inch equipment rack using the rack-mounting kit provided with your system. The Cisco ASR 1001 Router can be mounted into the rack using two recommended methods:

- Installing the chassis in an existing rack with equipment.
- Installing an empty chassis in a rack with no equipment installed.

When handling the chassis, always follow proper lifting practices. See the "Chassis-Lifting Guidelines" section in the *Preparing Your Site for Installation* chapter.

Note Inner clearance (the width between the inner sides of the two posts or rails) must be at least 19 inches (48.26 cm). The height of the chassis 1.71 inches (43.43 mm). Airflow through the chassis is from front to back.

Make sure the rack is stabilized.

SUMMARY STEPS

1. (Optional) Install a shelf in the rack to support the Cisco ASR 1001 Router. If you are using a shelf then raise the chassis to the level of the shelf. Let the bottom of the chassis rest on the brackets, but continue to support the chassis. Using two people, lift the chassis into the rack using the side handles and grasping underneath the power supply bays.
2. Position the chassis until the rack-mounting flanges are flush against the mounting rails on the rack.
3. Hold the chassis in position against the mounting rails while the second person finger-tightens a screw to the rack rails on each side of the chassis.
4. Finger-tighten screws to the rack rails on each side of the chassis.
5. Tighten all screws on each side to secure the chassis to the equipment rack.
6. Use a level to verify that the tops of the two brackets are level, or use a measuring tape to verify that both brackets are the same distance from the top of the rack rails.

DETAILED STEPS

Step 1 (Optional) Install a shelf in the rack to support the Cisco ASR 1001 Router. If you are using a shelf then raise the chassis to the level of the shelf. Let the bottom of the chassis rest on the brackets, but continue to support the chassis. Using two people, lift the chassis into the rack using the side handles and grasping underneath the power supply bays.

Step 2 Position the chassis until the rack-mounting flanges are flush against the mounting rails on the rack.

Note Use the second hole up from the bottom of the rack-mount bracket and the second hole down from the top of the rack-mount bracket. This will make it easier to attach the cable-management bracket to the chassis in the equipment rack.

Step 3 Hold the chassis in position against the mounting rails while the second person finger-tightens a screw to the rack rails on each side of the chassis.

Step 4 Finger-tighten screws to the rack rails on each side of the chassis.

Step 5 Tighten all screws on each side to secure the chassis to the equipment rack.

The following image shows front and rear rack-mounting of the Cisco ASR 1001 Router on a four-post rack.

Figure 202: Cisco ASR 1001 Router in a Four Post Rack—Front and Rear Rack-Mounting

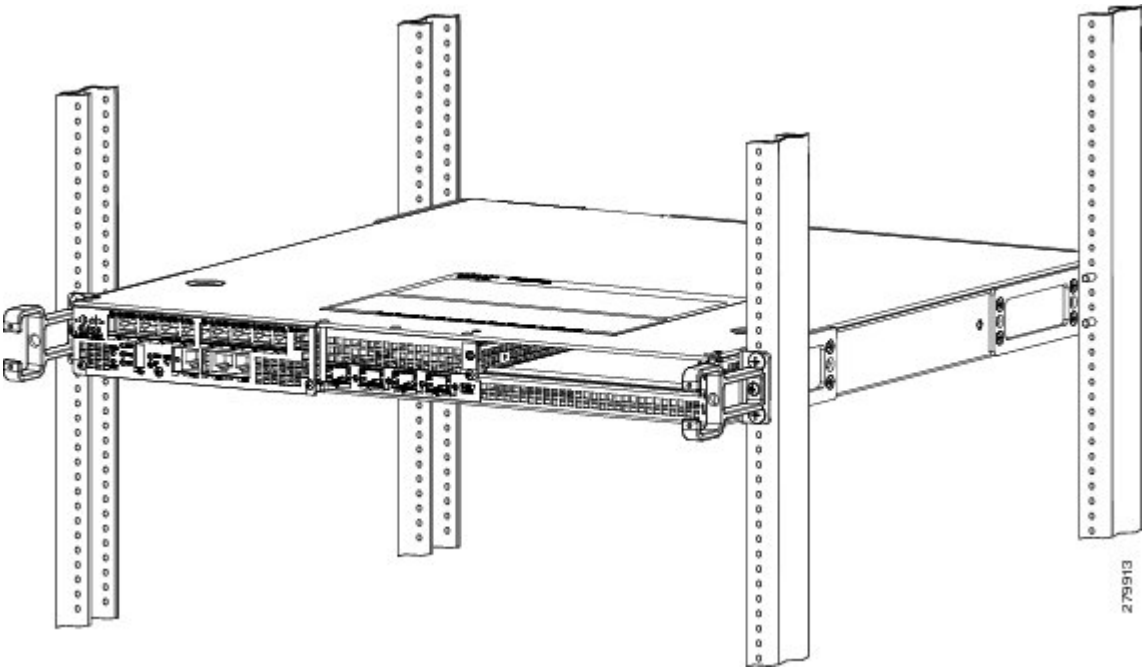

Step 6 Use a level to verify that the tops of the two brackets are level, or use a measuring tape to verify that both brackets are the same distance from the top of the rack rails.

What to do next

This completes the procedure for installing the chassis in the rack. Proceed to the Attaching the Cable-Management Bracket, on page 377 to continue the installation.

Attaching the Cable-Management Bracket

The cable-management brackets mount to each rack-mount bracket on the chassis to provide cable-management to both sides of the chassis (parallel with card orientation). These brackets are screw mounted to the rack-mount brackets to allow easy installation and removal of cables.

The cable-management brackets for the Cisco ASR 1001 Router contain one independent cable-management "U" type features with four screws and provides cable dressing of each card module slot.

Note Make certain that the cable-management bracket "U" type feature is facing upwards when you attach it to the chassis.

Follow these steps to attach the cable-management brackets to both sides of the Cisco ASR 1001 Router in the rack:

SUMMARY STEPS

1. Align the cable-management bracket to the rack-mount bracket on one side of the Cisco ASR 1001 Router. The cable-management bracket aligns to the top hole of the chassis rack-mount bracket.
2. Using a Phillips screwdriver, insert the screw through cable-management bracket and into the chassis rack-mount and tighten the screw.
3. Using the bottom rack-mount ear hole, insert the screw through cable-management bracket and into the chassis rack-mount (see Figure 203: Chassis Rack-Mount Bracket Ear Holes for the Cable-Management Bracket, on page 378).

DETAILED STEPS

Step 1 Align the cable-management bracket to the rack-mount bracket on one side of the Cisco ASR 1001 Router. The cable-management bracket aligns to the top hole of the chassis rack-mount bracket.

Step 2 Using a Phillips screwdriver, insert the screw through cable-management bracket and into the chassis rack-mount and tighten the screw.

Note Use the package of screws that came with your chassis containing four screws.

The following image shows where to attach the front rack-mount brackets to the Cisco ASR 1001 Router in a rack.

Figure 203: Chassis Rack-Mount Bracket Ear Holes for the Cable-Management Bracket

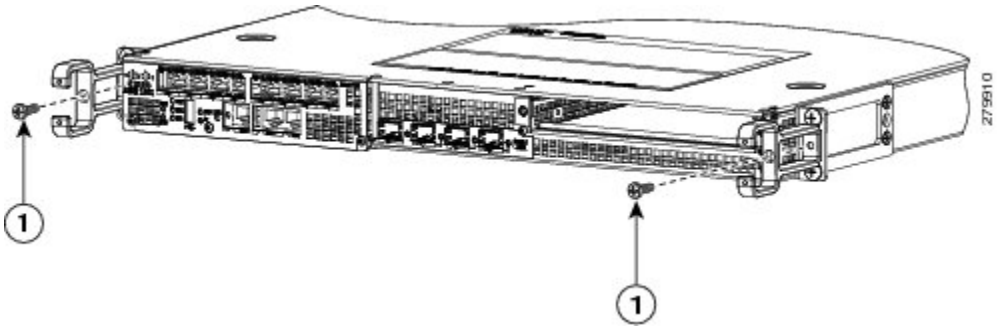

1	Secure the cable-management screw to the middle ear hole of the front rack-mount bracket on both sides of the Cisco ASR 1001 Router.

Step 3 Using the bottom rack-mount ear hole, insert the screw through cable-management bracket and into the chassis rack-mount (see Figure 203: Chassis Rack-Mount Bracket Ear Holes for the Cable-Management Bracket, on page 378).

What to do next

This completes the procedure for installing the cable-management brackets on the chassis.

Attaching a Chassis Ground Connection

Connecting the Cisco ASR 1000 Series Router to ground is required for all DC powered installations and any AC powered installation where compliance with Telcordia grounding requirements is necessary.

Caution The dual-lug chassis stud must be installed, the SIP and SPA must be fully inserted and screwed in and earthed to prevent a potential hazard in a telecom line.

Have the recommended tools and supplies available before you begin this procedure.

Recommended Tools and Supplies

The following tools, equipment, and supplies necessary to connect the system ground to the chassis:

- Phillips screwdriver
- 3.5 mm flat blade screwdriver (Phoenix # 1205053 or equivalent 3.5 mm flat blade)
- Dual-lug chassis ground component
- Grounding wire

The following image shows how to attach the ground lugs on the Cisco ASR 1000 Series chassis. The location of the ground lug on Cisco ASR 1000 Series Routers may not be the same on all routers; but the ground lug attachment instructions are similar.

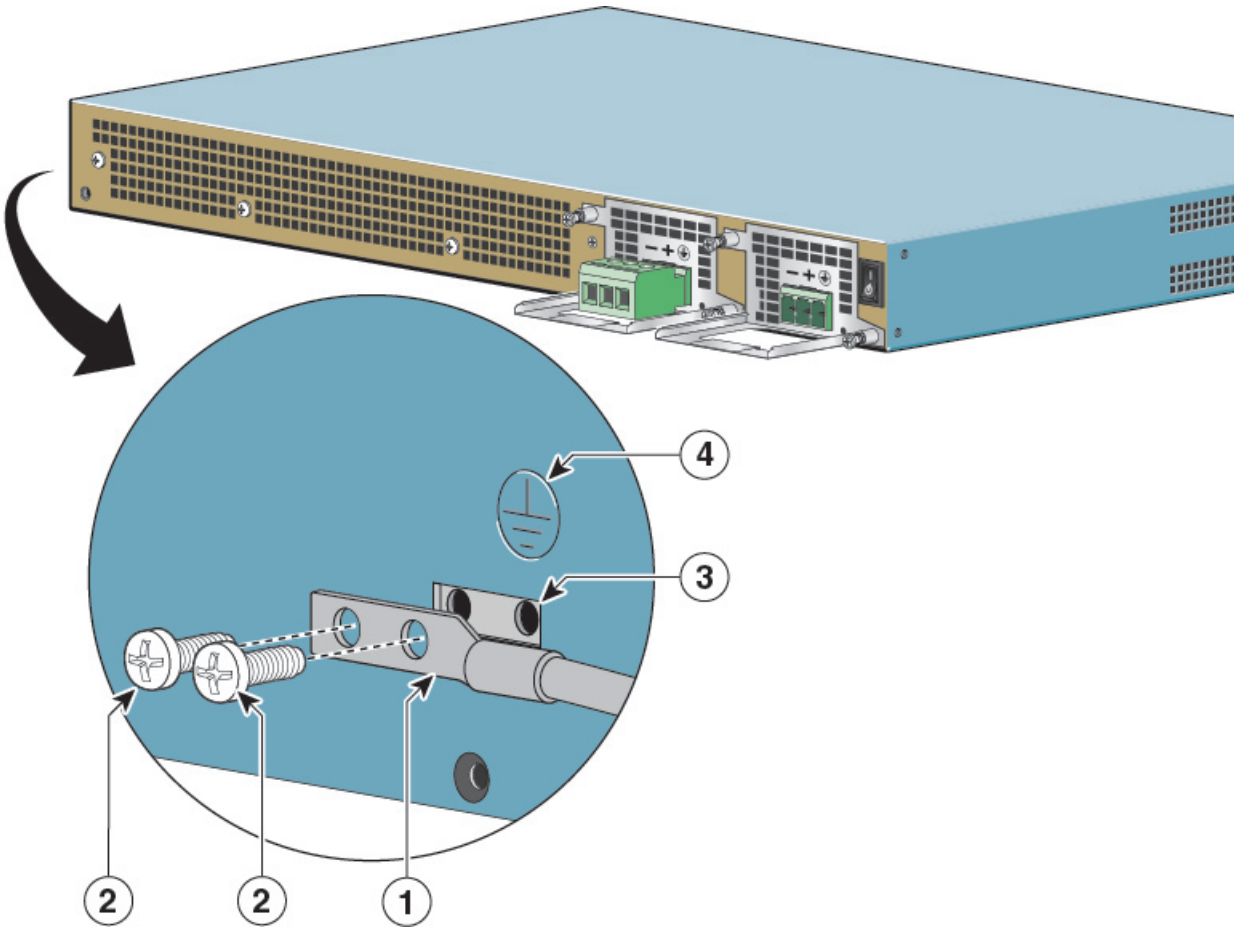

1	Chassis ground studs and lead wire	3	Ground connector on the chassis
2	Grounding screws	4	Ground symbol

Warning This equipment must be grounded. Never defeat the ground conductor or operate the equipment in the absence of a suitably installed ground conductor. Contact the appropriate electrical inspection authority or an electrician if you are uncertain that suitable grounding is available. Statement 1024

Before you connect power or turn on power to your chassis, you must provide an adequate chassis ground (earth) connection for the chassis. A chassis ground connector is provided on each Cisco ASR 1001 Router. There is a stud on the side of the chassis and on the DC power supply (primary grounding stud).

Caution The grounding wire is always the first to be installed or connected and the last to be removed or disconnected.

Use the following procedure to attach the grounding lug to the chassis ground connector on your chassis:

SUMMARY STEPS

1. Use the wire stripper to strip one end of the AWG #6 wire approximately 0.75 inches (19.05 mm).
2. Insert the AWG #6 wire into the wire receptacle on the grounding lug.
3. Use the crimping tool to carefully crimp the wire receptacle around the wire; this step is required to ensure a proper mechanical connection as shown in the next figure.
4. Attach the grounding lug with the wire so that the grounding wire does not overlap the power supply.
5. Locate the chassis ground connector on the side of your chassis.
6. Insert the two screws through the holes in the grounding lug.
7. Use the Number 2 Phillips screwdriver to carefully tighten the screws until the grounding lug is held firmly to the chassis. Do not overtighten the screws.
8. Connect the opposite end of the grounding wire to the appropriate grounding point at your site to ensure an adequate chassis ground.

DETAILED STEPS

Step 1 Use the wire stripper to strip one end of the AWG #6 wire approximately 0.75 inches (19.05 mm).

Step 2 Insert the AWG #6 wire into the wire receptacle on the grounding lug.

Step 3 Use the crimping tool to carefully crimp the wire receptacle around the wire; this step is required to ensure a proper mechanical connection as shown in the next figure.

Step 4 Attach the grounding lug with the wire so that the grounding wire does not overlap the power supply.

The following image shows how to attach a grounding lug to the chassis ground connector.

Figure 204: Attaching a Grounding Lug to the Chassis Ground Connector

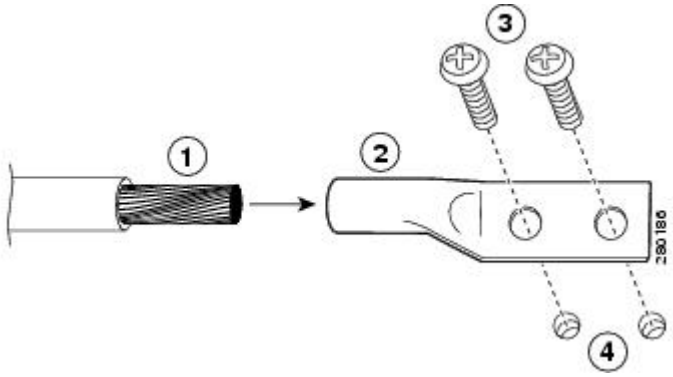

1	Chassis ground lead wire	3	Ground screws
2	Grounding stud	4	Chassis ground connector holes

Step 5 Locate the chassis ground connector on the side of your chassis.

Step 6 Insert the two screws through the holes in the grounding lug.

Step 7 Use the Number 2 Phillips screwdriver to carefully tighten the screws until the grounding lug is held firmly to the chassis. Do not overtighten the screws.

Step 8 Connect the opposite end of the grounding wire to the appropriate grounding point at your site to ensure an adequate chassis ground.

What to do next

This completes the procedure for attaching a chassis ground connection.

Connecting the Shared Port Adapter Cables

The instructions for connecting the cables for the shared port adapter installed in the Cisco ASR 1001 Router are contained in the respective configuration documents for each port adapter. For example, if you are connecting the optical fiber cables for the PA-POS-OC3 port adapter, see PA-POS-OC3 Port Adapter Installation and Configuration at the following location:

http://www.cisco.com/en/US/partner/docs/interfaces_modules/port_adapters/install_upgrade/pos/pa-pos-oc3_install_config/paposoc3.html

Connecting the Console and Auxiliary Port Cables

This section describes how to attach a cable to the Cisco embedded ASR1000-RP1 console or auxiliary ports on the Cisco ASR 1001 Router. The Cisco ASR 1001 Router uses RJ-45 ports for both the auxiliary port and console port to attach a console terminal.

Note Out of Band (OOB) or modem connection in the AUX ILIARY and/ CONSOLE ports, regardless of the configuration, the connection is not established and calls cannot be setup. This is not supported on all the Cisco ASR 1000 Series Aggregation Services Routers and all its Cisco IOS XE versions.

Caution To meet Class A emission requirements, shielded cables must be used for the console and auxiliary port connectors.

Before you can use the console interface on the router using a terminal or PC, you must perform the following steps:

SUMMARY STEPS

1. Before connecting a terminal to the console port, configure the terminal to match the chassis console port as follows: 9600 baud, 8 data bits, no parity, 1 stop bits (9600 8N1).
2. Connect to the port using the RJ-45 to DB-9 cable.
3. After you establish normal router operation, you can disconnect the terminal.

DETAILED STEPS

Step 1 Before connecting a terminal to the console port, configure the terminal to match the chassis console port as follows: 9600 baud, 8 data bits, no parity, 1 stop bits (9600 8N1).

Step 2 Connect to the port using the RJ-45 to DB-9 cable.

Note For information about how to change the default settings to meet the requirements of your terminal or host, see Cisco IOS Terminal Services Configuration Guide .

Step 3 After you establish normal router operation, you can disconnect the terminal.

What to do next

Note A connection will not be established when setting up an out-of-band connection or modem connection in the auxiliary port and the console port.

Management Ethernet Port Cable Connection

Caution To comply with Class A emissions requirements, a shielded Ethernet cable must be used for the connection.

To use the Management Ethernet interface on the router, perform the following steps:

SUMMARY STEPS

1. Insert an Ethernet RJ-45 cable into the MGMT ETHERNET port (see "Common Connectors for Cisco ASR 1001 Route Processor" figure in the *Cisco ASR 1001 Router Faceplate Common Components* section).
2. Insert the other end of the RJ-45 cable to your management device or network.

DETAILED STEPS

Step 1 Insert an Ethernet RJ-45 cable into the MGMT ETHERNET port (see "Common Connectors for Cisco ASR 1001 Route Processor" figure in the *Cisco ASR 1001 Router Faceplate Common Components* section).

Step 2 Insert the other end of the RJ-45 cable to your management device or network.

Connecting a Terminal to the Cisco ASR1000-RP1 Console Port

The Cisco ASR 1001 embedded route processor has an asynchronous serial (EIA/TIA-232) RJ-45 console port labeled CON on its front panel. You can connect this port to most types of video terminals through use of the console cable kit that is included with your Cisco ASR 1001 Router. The console cable kit contains:

- One RJ-45 to RJ-45 crossover cable
- One RJ-45 to DB-25 (female) adapter
- One RJ-45 to DB-9 (female) adapter

A crossover cable reverses pin connections from one end to the other. In other words, it connects pin 1 (at one end) to pin 8 (at the other end), pin 2 to pin 7, pin 3 to pin 6, and so on. You can identify a crossover cable by comparing the two modular ends of the cable. Hold the cable ends in your hand, side-by-side, with the tabs at the back. Ensure that the wire connected to the outside (left) pin of the left plug (pin 1) is the same color as the wire connected to the outside (right) pin of the right plug (pin 8).

Use the following procedure to connect a video terminal to the console port on a route processor.



Note Each Cisco ASR 1000 Series Route Processor must have a console port connection (typically to a terminal server) if you are running a redundant configuration in the chassis.

SUMMARY STEPS

1. Connect one end of the RJ-45 cables to the serial RJ-45 port (CON) on the Cisco embedded ASR1000-RP1 (see "Common Connectors for Cisco ASR 1001 Route Processor" in the *Cisco ASR 1001 Router Faceplate Common Components* section).
2. Run the cable up and through the cable-management bracket and connect the other end of the RJ-45 cable to the RJ-45 adapter (see "Cisco ASR 1001 Router AC Power Supply and DC Power Supply" figure in the *Cisco ASR 1001 Router Power Supply Installation* section).
3. Connect the adapter to your video terminal to complete the cable connection.
4. Power on your video terminal.
5. Configure your video terminal to match the following default console port settings:

6. Go to the Connecting Cables, on page 384 to continue the installation.

DETAILED STEPS

Step 1 Connect one end of the RJ-45 cables to the serial RJ-45 port (CON) on the Cisco embedded ASR1000-RP1 (see "Common Connectors for Cisco ASR 1001 Route Processor" in the *Cisco ASR 1001 Router Faceplate Common Components* section).

Step 2 Run the cable up and through the cable-management bracket and connect the other end of the RJ-45 cable to the RJ-45 adapter (see "Cisco ASR 1001 Router AC Power Supply and DC Power Supply" figure in the *Cisco ASR 1001 Router Power Supply Installation* section).

Step 3 Connect the adapter to your video terminal to complete the cable connection.

Step 4 Power on your video terminal.

Step 5 Configure your video terminal to match the following default console port settings:

- 9600 baud
- 8 data bits
- No parity generation or checking
- 1 stop bit
- No flow control

Step 6 Go to the Connecting Cables, on page 384 to continue the installation.

Connecting Cables

Keep the following guidelines in mind when connecting external cables to the Cisco ASR 1001 Router:

- To reduce the chance of interference, avoid crossing high-power lines with any interface cables.
- Verify all cabling limitations (particularly distance) before powering on the system.

Overview of AC and DC Power Supplies for the Cisco ASR 1001 Router

The Cisco ASR 1001 Router power supplies each provide 400 W of output power and are used in a 1 + 1 redundant configuration. There is no input switch on the faceplate of the power supplies. The power supply will be switched from Standby to ON by way of a system chassis STANDBY/ON switch. The power supply slot numbers are on the rear of the chassis to the left side of each power supply. When facing the rear of the chassis, power supply slot 0 (PS0) is to the left and power supply slot 1(PS1) is to the right (next to the power supply Standby switch).

The Cisco ASR 1001 Router supports the following power supplies:

- Cisco ASR 1001 Router AC power supply—Provides 400 watt output power with two DC voltage outputs: +12 V and +5 V. The AC power supply operates between 85 and 264 VAC. The AC power

supply current shares on the 12 V output and is used in a dual hot pluggable configuration. The AC power supply consumes a maximum of 471 W of input power.

- Cisco ASR 1001 Router DC power supply—Provides 400 watt output power with two DC voltage outputs: +12 V and +5.0 V. The power supply operates between –40.5 and –72 VDC. The DC power supply current shares on the 12 V output and is used in a dual hot pluggable configuration. The DC power supply consumes a maximum of 500 W of input power.

Cisco ASR 1001 Router Power Supply Installation

The Cisco ASR 1001 Router AC and DC power supplies are shipped installed in the chassis. You must connect the power supplies when they arrive.

Note The Cisco ASR 1001 Router can support two AC or two DC power supplies. Do not mix AC and DC power supply units in the same chassis.

The following image shows both the AC and DC power supplies for the Cisco ASR 1001 Router.

Figure 205: Cisco ASR 1001 Router AC Power Supply and DC Power Supply

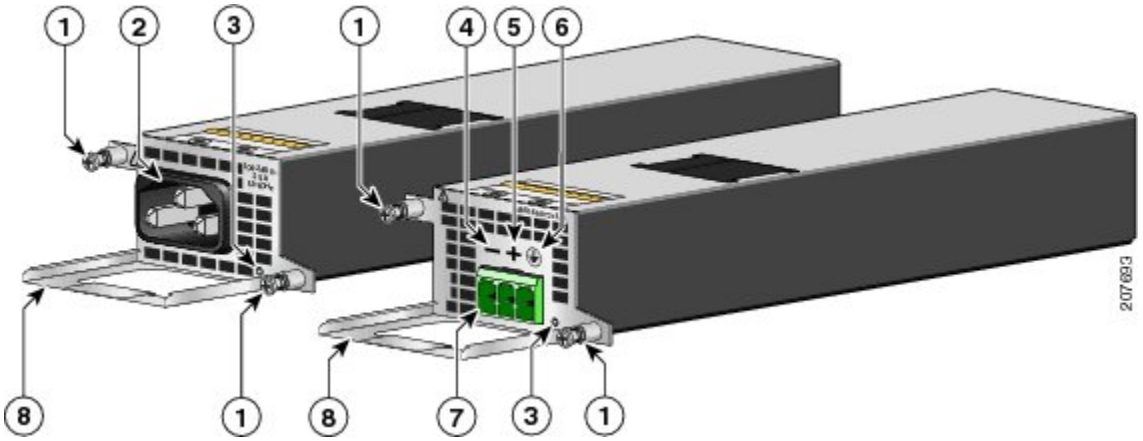

1	AC and DC power supply fasteners	5	DC power supply positive (+) connection
2	AC power supply inlet	6	DC power supply ground symbol
3	Power supply LED	7	DC power supply terminal block connection
4	DC power supply negative (-) connection	8	AC and DC power supply handles

The following table describes the power supply LED. The function of the LED is the same for both the AC and DC power supplies.

Table 90: Cisco ASR 1001 Router AC and DC Power Supply LED

LED Color and State	Description
Solid green	Power output is on and within the normal operating range.
Blinking green, at the rate of one blink per second	Input power that is within the normal operating range is being supplied, but the Standby switch is in the Standby position (and not in the On position).
Solid amber	A power supply critical event has occurred, and the power supply has shut down. The critical event can be temperature, voltage, current, or fan operating outside the normal operating range.
Blinking amber, at the rate of one blink per second	A power supply warning event has occurred, but the power supply can continue to operate. The warning event can be temperature, voltage, current, or fan operating outside the normal operating range.
Off	Power supply is shut down.

This section contains the following topics:

Warning The covers are an integral part of the safety design of the product. Do not operate the unit without the covers installed. Statement 1077

Warning When you install the unit, the ground connection must always be made first and disconnected last. Statement 1046

Warning Before performing any of the following procedures, ensure that power is removed from the DC circuit. Statement 1003

Warning Only trained and **qualified personnel should be allowed** to install, replace, or service this equipment. Statement 1030

Installing AC Input Power to Cisco ASR 1001 Router

The Cisco ASR 1001 Router has two AC power supplies in the rear of the chassis. The input receptacle is an IEC60320 C14 type of filtered AC inlet. The current rating on the connector is 10 A.

Warning Do not install the power supplies with the chassis cover off.

The following image shows the Cisco ASR 1001 Router AC power supplies.

Figure 206: Cisco ASR 1001 Router AC Power Supplies



Follow these steps to connect an AC input power supply to the Cisco ASR 1001 Router.

SUMMARY STEPS

1. There are two power supplies installed. At the rear of the chassis, check that the power switch on the chassis is in the standby position.
2. Turn off the circuit breaker to the power supply.
3. For easier installation, plug the power cable into the inlet on power supply slot 1 first.
4. Then insert the power supply cable into the power supply in slot 0 on the right.
5. Make certain that the AC power cords are positioned as shown in the following image.
6. Plug the AC power supply cables into the AC power source.
7. Turn on the AC breaker.
8. Turn the Standby switch to On (|) on the chassis.
9. The power supply LED illuminates green.

DETAILED STEPS

Step 1 There are two power supplies installed. At the rear of the chassis, check that the power switch on the chassis is in the standby position.

The following image shows the Cisco ASR 1001 Router AC power supply standby switch.

Figure 207: Cisco ASR 1001 Router AC Power Supply Standby Switch

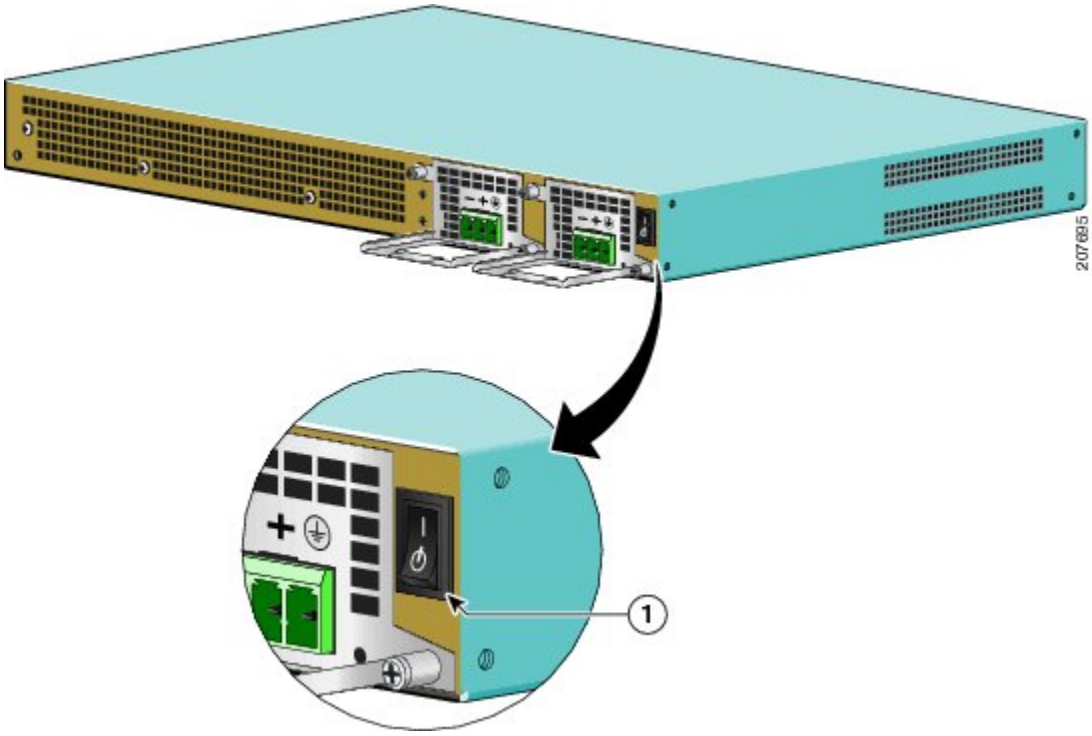

1	Cisco ASR 1001 Router Standby switch, which does not disconnect power from the power source.

Step 2 Turn off the circuit breaker to the power supply.

Step 3 For easier installation, plug the power cable into the inlet on power supply slot 1 first.

Step 4 Then insert the power supply cable into the power supply in slot 0 on the right.

Step 5 Make certain that the AC power cords are positioned as shown in the following image.

Figure 208: Correct Position of the Cisco ASR 1001 Router AC Power Supply Cables

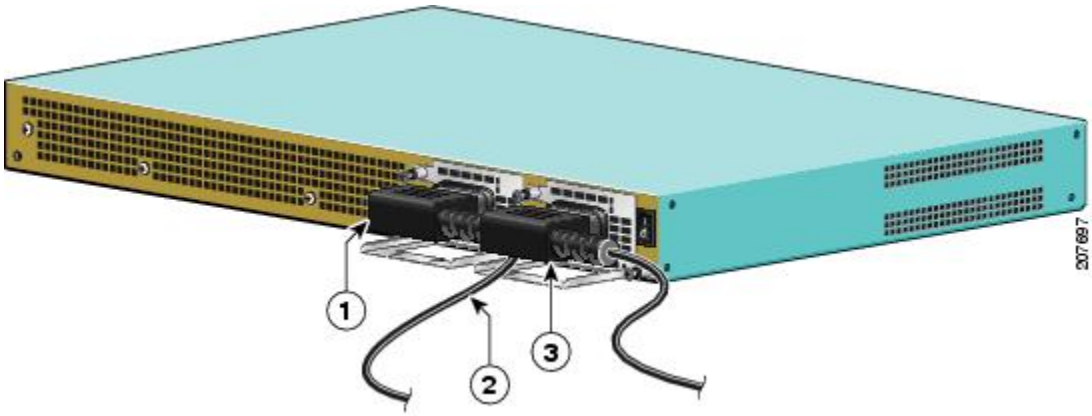

1	AC power supply in PS0	3	AC power supply in PS1
2	Position of power supply cable from PS0	—	—

Step 6 Plug the AC power supply cables into the AC power source.

Step 7 Turn on the AC breaker.

Step 8 Turn the Standby switch to On (|) on the chassis.

Step 9 The power supply LED illuminates green.

What to do next

This completes the procedure for connecting AC input power.

Removing AC Power Supply from the Cisco ASR 1001 Router

This section describes how to remove an AC power supply from the Cisco ASR 1001 Router. The Cisco ASR 1001 Router has two power supply slots, power supply slot 1 (PS1) next to the Standby switch and power supply slot 0 (PS0) to the left, as shown in the following image.

Follow these steps to remove an AC power supply from the Cisco ASR 1001 router:

SUMMARY STEPS

1. Unplug the power cable from the power source.
2. To remove the power cord from PS1, position the power supply cable in order to access the power supply fasteners. Hold back the power supply cable in PS0, as shown in the following image, ensuring that you do not unplug the power cable.
3. Continue to hold back the power supply cable in PS0, to gain access to the fastener. Unscrew both fasteners on the power supply in slot 1.
4. After the power supply fasteners are loosened, grasp the handle with one hand, support the weight of the power supply with the other hand, and pull the power supply out of the slot. The following image shows how to remove the Cisco ASR 1001 Router AC power supply cables.
5. Repeat these steps to remove the AC power supply from Slot PS0.

DETAILED STEPS

Step 1 Unplug the power cable from the power source.

Step 2 To remove the power cord from PS1, position the power supply cable in order to access the power supply fasteners. Hold back the power supply cable in PS0, as shown in the following image, ensuring that you do not unplug the power cable.

Figure 209: Positioning the AC Power Supply Cable in Slot PS0

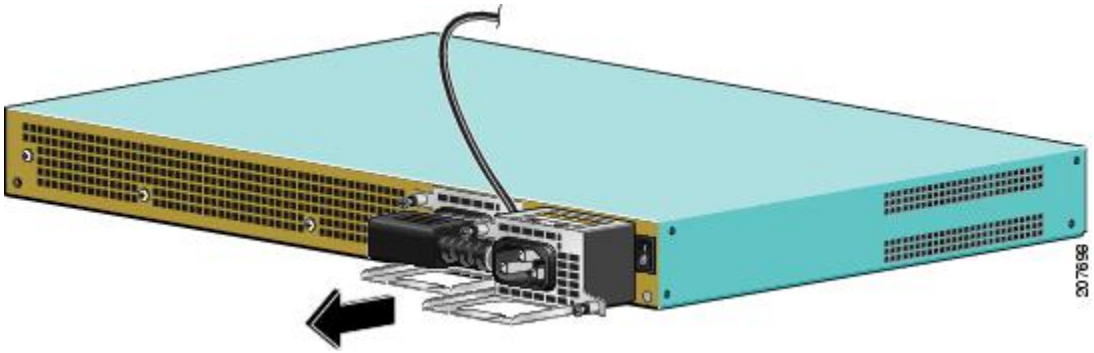

Step 3 Continue to hold back the power supply cable in PS0, to gain access to the fastener. Unscrew both fasteners on the power supply in slot 1.

Tip The Cisco ASR 1001 power supplies are long and narrow. It is recommended that when you pull the power supply out of the chassis, you support the power supply from the bottom with the other hand.

Step 4 After the power supply fasteners are loosened, grasp the handle with one hand, support the weight of the power supply with the other hand, and pull the power supply out of the slot. The following image shows how to remove the Cisco ASR 1001 Router AC power supply cables.

Figure 210: Removing the Cisco ASR 1001 Router AC Power Supply Cables

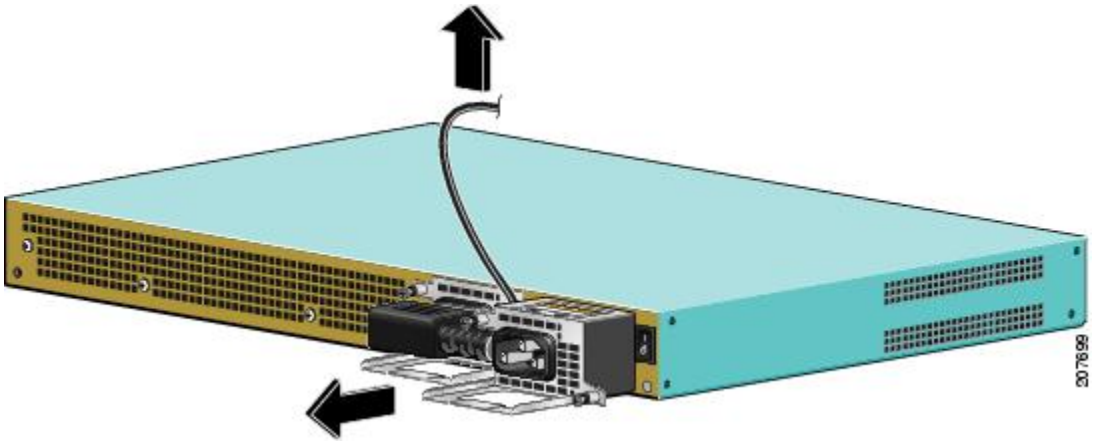

Step 5 Repeat these steps to remove the AC power supply from Slot PS0.

What to do next

This completes the procedure of removing the AC power supply from the Cisco ASR 1001 Router.

Installing DC Input Power on the Cisco ASR 1001 Router

The Cisco ASR 1001 Router DC input connector is compatible with a pluggable Euro-style plug. The input connector and plug must be UL recognized under UL 486 for field wiring. The connection polarity shall be

from left to right: negative (–), positive (+), and ground. See "Cisco ASR 1001 Router AC Power Supply and DC Power Supply" figure in the *Cisco ASR 1001 Router Power Supply Installation* section.

The power supply has a handle, to assist in insertion and extraction. The module must be supported with one hand because of its length. The following image shows the rear view of the Cisco ASR 1001 Router DC power supply.

Figure 211: Cisco ASR 1001 Router DC Power Supply Rear View

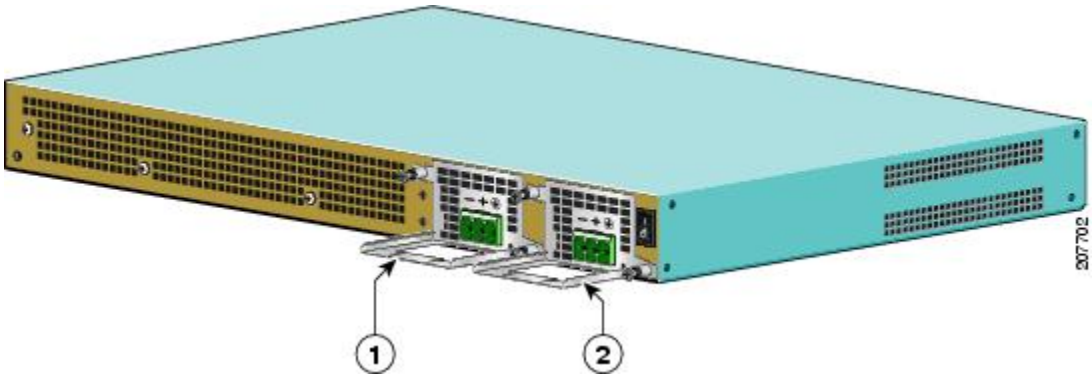

1	DC power supply in slot 0	2	DC power supply in slot 1

This section describes how to install the DC power supply ground leads and input power leads to the Cisco ASR 1001 Router DC input power supply. Before you begin, read these important notices:

- The color coding of the DC input power supply leads depends on the color coding of the DC power source at your site. Typically, green or green/yellow is used for ground (GND), black is used for –48 V on the negative (–) terminal, and red is used for RTN on the positive (+) terminal. Ensure that the lead color coding you choose for the DC input power supply matches the lead color coding used at the DC power source.
- Ensure that the chassis ground is connected on the chassis before you begin installing the DC power supply. Follow the steps provided in the Attaching a Chassis Ground Connection, on page 378.

Warning When you install a power supply unit, the ground connection should always be made first and disconnected last. Statement 1046

To connect the DC power supply on the Cisco ASDR 1001 Router, follow these steps:

SUMMARY STEPS

1. Ensure that the chassis ground is connected on the chassis before you begin installing the DC power supply, as described in the Attaching a Chassis Ground Connection, on page 378.
2. At the rear of the chassis, next to the power supply bay PS1, ensure that the power supply switch is in Standby position.
3. Turn off the circuit breaker to the power supply.

DETAILED STEPS

Step 1 Ensure that the chassis ground is connected on the chassis before you begin installing the DC power supply, as described in the Attaching a Chassis Ground Connection, on page 378.

Step 2 At the rear of the chassis, next to the power supply bay PS1, ensure that the power supply switch is in Standby position.

Step 3 Turn off the circuit breaker to the power supply.

Wiring the DC Input Power Source

The Cisco ASR 1001 Router DC power supply has a connector plug that is installed into the power supply terminal block header. The following figure shows a view of a DC power supply with a DC connector plug inserted (no wires installed) into the power supply block header in power supply PS0 (on the left), and the other power supply with no connector plug inserted into power supply PS1 (on the right).

Figure 212: Cisco ASR 1001 Router DC Power Supply Terminal Block With a Connector Plug in Slot 0 and Without a Connector Plug in Slot 1

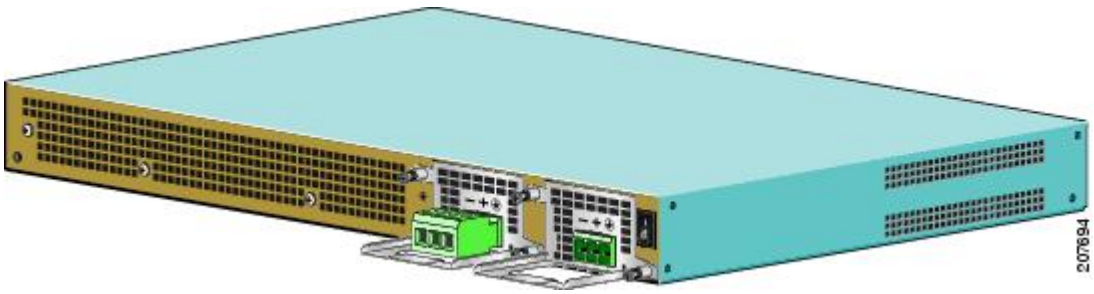

Note Two types of DC connector plugs are supported for use with the DC power supply for the Cisco ASR 1001 Router. In one type of connector plug, the screw holes are raised above the connector plug body. In the second type, the screw holes are not raised above the connector plug body. The figure in step 6 shows the connector plug in which the screw holes are not raised. The only difference in the method for using these two types of connector plugs is related to the wire-strip length, which is mentioned later in this section.

Danger When installing or replacing the unit, the ground connection must always be made first and disconnected last. Statement 1046

Danger This product relies on the building's installation for short-circuit (overcurrent) protection. Ensure that the protective device is rated not greater than: 120 VAC, 20A U.S. (240 VAC, 10A international). Statement 1005

Danger Before performing any of the following procedures, ensure that power is removed from the DC circuit. Statement 1003

Danger Only trained and qualified personnel should be allowed to install, replace, or service this equipment. Statement 1030

Use the information provided in this section to wire the DC input power source:

SUMMARY STEPS

1. At the front of the router, ensure that the power switch is in the Standby position.
2. Move the circuit-breaker switch handle to the Off position, and apply tape to hold it in the Off position.
3. Gather the DC power supply terminal block plug.
4. Insert the lead wires before inserting the plug into the terminal block header on the DC power supply.
5. Use a 10 gauge wire-stripping tool to strip each of the three wires coming from the DC input power source. If you are using the connector plug with the raised screw holes, strip the wires to 0.39 inch (10 mm) + 0.02 inch (0.5 mm). If you are using the connector plug with the screw holes that are not raised, strip the wires to 0.27 inch (7 mm) + 0.02 inch (0.5 mm). Do not strip more than the recommended length of wire because doing so could leave the wire exposed from the terminal block plug. The following figure shows a stripped DC input power source wire.
6. Identify the positive, negative, and ground feed positions for the terminal block connection. The recommended wiring sequence is:
7. Insert the exposed wire of one of the ground wire into the terminal block plug. Ensure that you cannot see any wire lead. Only wires with insulation should extend from the terminal block.
8. Use a ratcheting torque screwdriver to torque the terminal block plug captive screw (above the installed wire lead) to from 0.5 Nm (4.425 lbf in. to 0.6 Nm (5.310 lbf in.), as shown in the following figure.
9. Repeat Step 6 through Step 8 for the remaining two DC input power source wires, the positive lead wire and the negative lead wire.
10. Use a tie wrap to secure the wires to the rack, so that the wires are not pulled from the terminal block plug by casual contact. Make sure the tie wrap allows for some slack in the ground wire. The following figure shows the DC terminal block plug inserted and the tie wrap secured.
11. Ensure that the terminal block plug is fully seated in the terminal block header on the DC power supply panel. You will hear a snap or click when installed properly.
12. Remove the tape (if any) from the circuit breaker switch handle, and move the circuit breaker switch handle to the On position.
13. At the rear of the router, place the power supply Standby switch in the On position to turn on the router.

DETAILED STEPS

Step 1 At the front of the router, ensure that the power switch is in the Standby position.

Step 2 Move the circuit-breaker switch handle to the Off position, and apply tape to hold it in the Off position.

Step 3 Gather the DC power supply terminal block plug.

Step 4 Insert the lead wires before inserting the plug into the terminal block header on the DC power supply.

Step 5 Use a 10 gauge wire-stripping tool to strip each of the three wires coming from the DC input power source. If you are using the connector plug with the raised screw holes, strip the wires to 0.39 inch (10 mm) + 0.02 inch (0.5 mm). If you are using the connector plug with the screw holes that are not raised, strip the wires to 0.27 inch (7 mm) + 0.02 inch (0.5 mm). Do not strip more than the recommended length of wire because doing so could leave the wire exposed from the terminal block plug. The following figure shows a stripped DC input power source wire.

Figure 213: Stripping the DC Input Power Source Wire

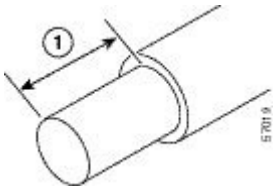

1	0.39 inch (10 mm) is the recommended wire-strip length for the connector plug that has raised screw holes. 0.27 inch (7 mm) is the recommended wire-strip length for the connector plug that does not have raised screw holes.

Danger An exposed wire lead from a DC input power source can conduct harmful levels of electricity. Be sure that no exposed portion of the DC input power source wire extends from the terminal block plug. Statement 122

Step 6 Identify the positive, negative, and ground feed positions for the terminal block connection. The recommended wiring sequence is:

- Ground lead wire (right)
- Positive (+) lead wire (middle)
- Negative (–) lead wire (left)

The following figure shows the DC power supply with lead wires.

Figure 214: DC Power Supply with Lead Wires

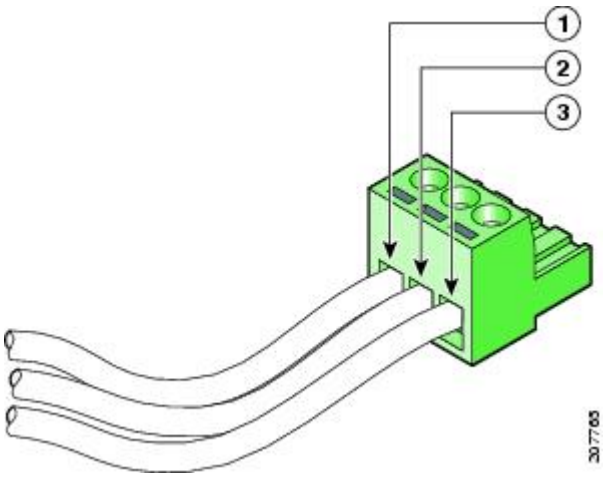

1	Negative (–) lead wire	3	Ground lead wire
2	Positive (+) lead wire	—	—

Step 7 Insert the exposed wire of one of the ground wire into the terminal block plug. Ensure that you cannot see any wire lead. Only wires with insulation should extend from the terminal block.

Caution Do not overtorque the terminal block plug captive screws. The recommended maximum torque is from 0.5 Nm (4.425 lbf in.) to 0.6 Nm (5.310 lbf in.).

Step 8 Use a ratcheting torque screwdriver to torque the terminal block plug captive screw (above the installed wire lead) to from 0.5 Nm (4.425 lbf in. to 0.6 Nm (5.310 lbf in.), as shown in the following figure.

Figure 215: Torquing the DC Power Supply Terminal Block Plug Screws

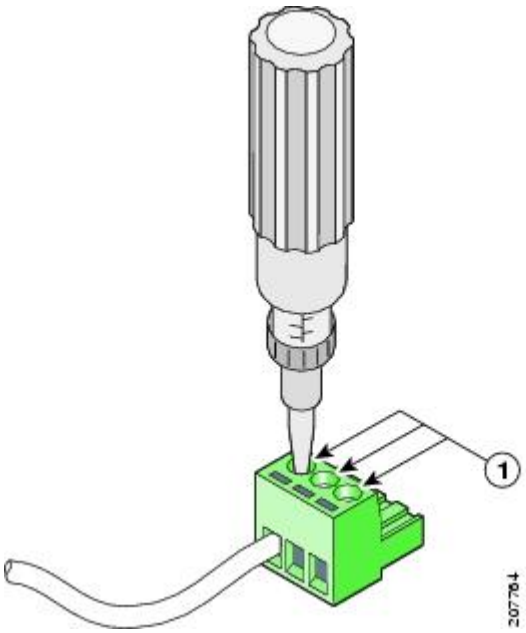

1	Torque is from 0.5 Nm (4.425 lbf in.) to 0.6 Nm (5.310 lbf in.)

Step 9 Repeat Step 6 through Step 8 for the remaining two DC input power source wires, the positive lead wire and the negative lead wire.

The following figure shows how to insert the DC power supply terminal block plug in the block header.

Figure 216: Inserting the DC Power Supply Terminal Block Plug in the Block Header

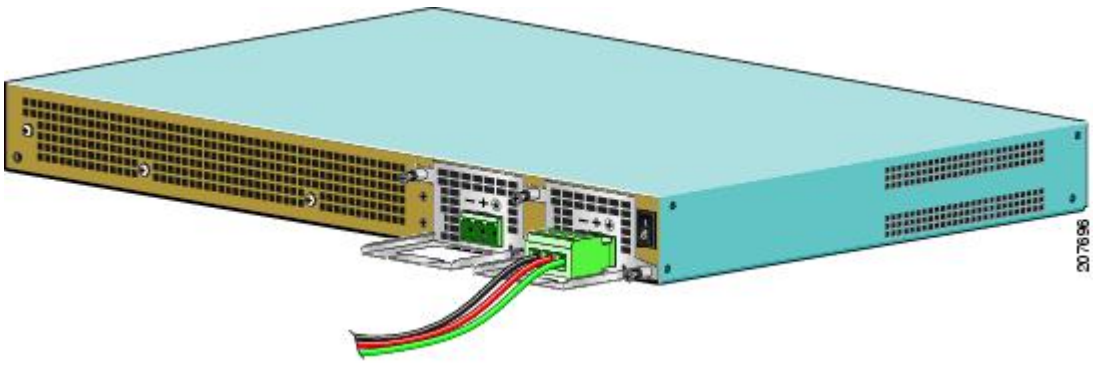

1	DC power supply negative (-) lead wire	3	DC power supply ground lead wire

2	DC power supply positive (+) lead wire	—	—

Caution Secure the wires coming in from the terminal block plug so that they cannot be disturbed by casual contact.

Step 10 Use a tie wrap to secure the wires to the rack, so that the wires are not pulled from the terminal block plug by casual contact. Make sure the tie wrap allows for some slack in the ground wire. The following figure shows the DC terminal block plug inserted and the tie wrap secured.

Figure 217: Complete DC Terminal Block Plug Insertion and Secure Tie Wrap

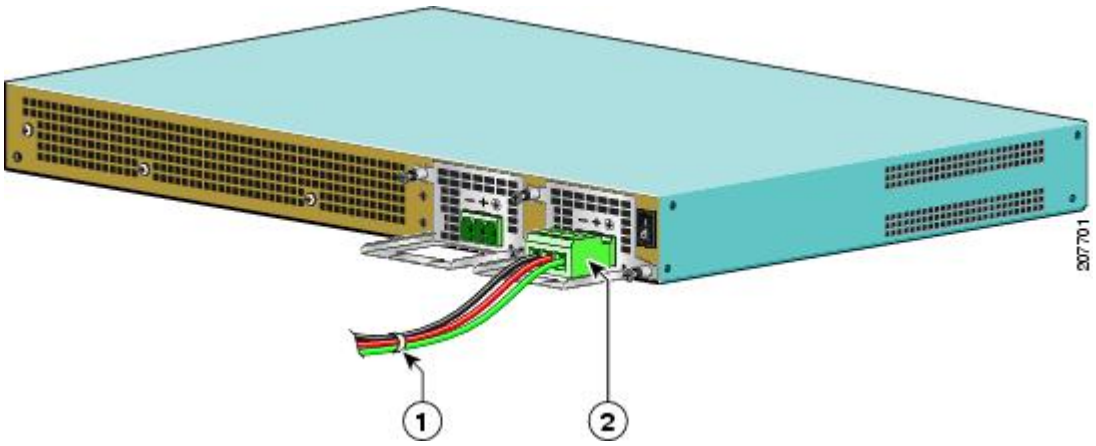

1	Lead wires secured with a tie wrap	2	DC power supply terminal block plug being inserted into terminal block header.

Step 11 Ensure that the terminal block plug is fully seated in the terminal block header on the DC power supply panel. You will hear a snap or click when installed properly.

Step 12 Remove the tape (if any) from the circuit breaker switch handle, and move the circuit breaker switch handle to the On position.

Step 13 At the rear of the router, place the power supply Standby switch in the On position to turn on the router.

The power supply LEDs light up when power is supplied to the router.

What to do next

This completes the procedure for connecting the DC power supply in the Cisco ASR 1001 Router.

Removing DC Input Power from the Cisco ASR 1001 Router

This section describes how to remove a DC power supply from the Cisco ASR 1001 Router. Follow these steps:

SUMMARY STEPS

1. Turn off the circuit breaker.
2. Pull the terminal block plug connector out of the terminal block head in the power supply.
3. Unscrew the two power supply fasteners on the unit.

4. Grasping the power supply handle with one hand, pull the power supply out of the chassis while supporting it with the other hand.

DETAILED STEPS

Step 1 Turn off the circuit breaker.

Step 2 Pull the terminal block plug connector out of the terminal block head in the power supply.

Step 3 Unscrew the two power supply fasteners on the unit.

Step 4 Grasping the power supply handle with one hand, pull the power supply out of the chassis while supporting it with the other hand.

What to do next

This completes the procedure for removing the DC power supply from the Cisco ASR 1001 Router.

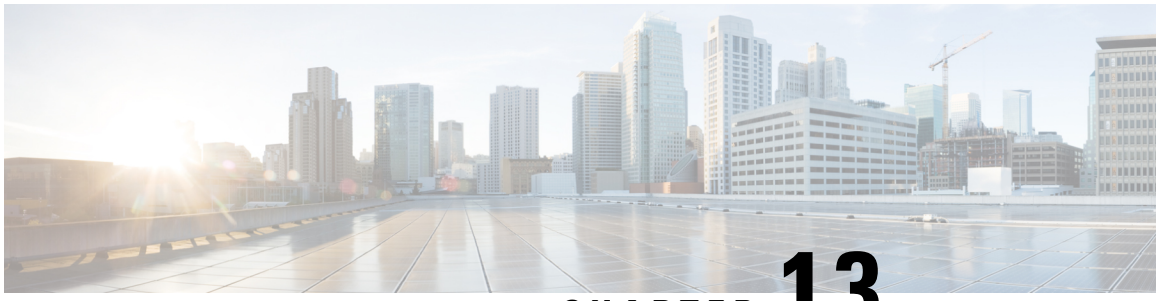

CHAPTER 13

Cisco ASR 1000 Series Routers Power Up and Initial Configuration

This chapter guides you through a basic router configuration, which is sufficient for you to access your network. Complex configuration procedures are beyond the scope of this publication and can be found in the modular configuration and modular command reference publications in the Cisco IOS software configuration documentation set that corresponds to the software release installed on your Cisco hardware.

To configure the Cisco ASR 1000 Series Router from a console, you need to connect a terminal to the router console port.

This chapter contains the following sections:

- Checking Conditions Prior to System Startup, on page 399
- Verifying Power Supply Operation, on page 400
- Powering Up the Cisco ASR 1000 Series Routers, on page 401
- Configuring the Cisco ASR 1000 Series Routers at Startup, on page 405
- Powering Off the Cisco ASR 1000 Series Router Safely, on page 408

Checking Conditions Prior to System Startup

Ensure that the following conditions are addressed before starting up the router:

- The shared port adapter is inserted in its slot.
- The network interface cable is connected.
- The optional Fast Ethernet Management port cable is installed.
- The chassis is securely mounted and grounded.
- The power and interface cables are connected

  .
- Your PC with terminal emulation program (hyperTerminal or equivalent) is connected to the console port and powered up.
- Your PC terminal emulation program is configured for 9600 baud, 8 data bits, 1 stop bit, no parity, and flow control is set to none.
- You have selected passwords for access control.

- Captive installation screws are tight on all removable components.
- The console terminal is turned on.
- You have determined the IP addresses for the Ethernet and serial interfaces.
- Empty card slots or card bays are filled with card blanks. This ensures proper air flow through the chassis and electromagnetic compatibility (EMC).

You are now ready to start your router.

Verifying Power Supply Operation

Follow this procedure to verify power supply is operating correctly.

SUMMARY STEPS

1. Check that the power supply LEDs are:
2. To ensure that the power supply state is OK, type the **show platform** command. This output sample is from the Cisco ASR 1013 router. The other Cisco ASR 1000 routers display similar type of output.

DETAILED STEPS

Step 1 Check that the power supply LEDs are:

- INPUT OK is green
- FAN OK is green
- OUTPUT FAILED is not illuminated

Step 2 To ensure that the power supply state is OK, type the **show platform** command. This output sample is from the Cisco ASR 1013 router. The other Cisco ASR 1000 routers display similar type of output.

The following output displays:

Example:

```
Router# show platform
Chassis type: ASR1013
Slot      Type                State                 Insert time (ago)
--------- ------------------- --------------------- -----------------
0         ASR1000-SIP40       ok                    22:56:46
 0/0      SPA-5X1GE-V2        ok                    22:55:42
 0/1      SPA-5X1GE-V2        ok                    22:55:36
 0/2      SPA-5X1GE-V2        ok                    22:55:32
 0/3      SPA-5X1GE-V2        ok                    22:55:28
1         ASR1000-SIP40       ok                    22:56:46
 1/0      SPA-5X1GE-V2        ok                    22:55:43
 1/1      SPA-5X1GE-V2        ok                    22:55:40
 1/2      SPA-5X1GE-V2        ok                    22:55:35
 1/3      SPA-5X1GE-V2        ok                    22:55:30
2         ASR1000-SIP10       ok                    22:56:46
 2/0      SPA-5X1GE-V2        ok                    22:55:41
 2/1      SPA-5X1GE-V2        ok                    22:55:33
```

```
 2/2      SPA-5X1GE-V2        ok                  22:55:27
 2/3      SPA-5X1GE-V2        ok                  22:55:22
3         ASR1000-SIP40       ok                  22:56:46
 3/0      SPA-3XOC3-ATM-V2    ok                  22:55:43
 3/1      SPA-4X1FE-TX-V2     ok                  22:55:41
 3/2      SPA-1XCHSTM1/OC3    ok                  22:55:35
 3/3      SPA-8XCHT1/E1       ok                  22:55:32
4         ASR1000-SIP40       ok                  22:56:46
 4/0      SPA-1X10GE-L-V2     ok                  22:55:43
 4/1      SPA-2XCT3/DS0       ok                  22:55:41
 4/2      SPA-2X1GE-V2        ok                  22:55:34
 4/3      SPA-1XOC12-POS      ok                  22:55:32
5         ASR1000-SIP10       ok                  22:56:46
 5/0      SPA-4XT-SERIAL      ok                  22:55:39
 5/1      SPA-4XOC3-POS       ok                  22:55:34
 5/2      SPA-5X1GE-V2        ok                  22:55:26
 5/3      SPA-2XT3/E3         ok                  22:55:22
R0        ASR1000-RP2         ok, active          22:56:46
R1        ASR1000-RP2         ok, standby         22:56:46
F0        ASR1000-ESP40       ok, active          22:56:46
F1        ASR1000-ESP40       ok, standby         22:56:46
P0        ASR1013-PWR-AC      ps, fail            22:55:56
P1        ASR1013-PWR-AC      ok                  22:55:56
P2        ASR1013-PWR-AC      ok                  22:55:56
P3        ASR1013-PWR-AC      ps, fail            22:55:56
Slot      CPLD Version        Firmware Version
--------- ------------------- ------------------------------------
0         00200800            15.0(1r)S
1         00200800            15.0(1r)S
2         09111601            15.0(1r)S
3         00200800            15.0(1r)S
4         00200800            15.0(1r)S
5         09111601            15.0(1r)S
R0        10021901            15.0(1r)S
R1        10021901            15.0(1r)S
F0        1001270D            15.0(1r)S
F1        1001270D            15.0(1r)S
MCP_CAP_13RU#
```

If the LEDs indicate a power problem or the power supply state is **ps, fail,** then contact a customer service representatives for assistance or additional instructions.

Powering Up the Cisco ASR 1000 Series Routers

Make certain that all card slots and compartments are closed off. Install blank faceplates on any empty slots. Always have power supply slots filled. If you leave a power supply slot uncovered, then you risk exposure to hazardous voltages on the power pins on the midplane.

After installing your Cisco ASR 1000 Series Routers and connecting cables, start the router.

Warning Blank faceplates and cover panels serve three important functions: they prevent exposure to hazardous voltages and currents inside the chassis; they contain electromagnetic interference (EMI) that might disrupt other equipment; and they direct the flow of cooling air through the chassis. Do not operate the system unless all cards, faceplates, front covers, and rear covers are in place. Statement 1029

Note There is no cover on the Cisco ASR 1002 Router and the Cisco ASR 1002-X Router DC power supply terminal block; therefore, Statement 1029 does not apply to the Cisco ASR 1002 router.

You are now ready to power on the system for the first time. Follow these steps.

SUMMARY STEPS

1. Before you power on, make sure that:
2. Move the power switch to the ON position. Listen for the fans; you should immediately hear them operating.
3. Depending on your installation, some LEDs on the rear of the chassis and on installed modules also come on.
4. Observe the initialization process. When the system boot is complete (the process takes a few seconds), the Cisco ASR 1000 RP1 begins to initialize.
5. During the boot process, observe the system LEDs. The LEDs on the shared port adapter go on and off in irregular sequence. They may go on, go out, and go on again for a short time. On the router, the green STATUS LED comes on and stays on.

DETAILED STEPS

Step 1 Before you power on, make sure that:

a) The AC cord is plugged into the AC power inlet.
b) All cables are connected.
c) Your computer is powered up and connected.

Note To view the boot sequence, you must have a console connection to the Cisco ASR 1000 Series Routers before it powers up.

Step 2 Move the power switch to the ON position. Listen for the fans; you should immediately hear them operating.

Step 3 Depending on your installation, some LEDs on the rear of the chassis and on installed modules also come on.

Caution Do not press any keys on the keyboard until the messages stop and the SYS PWR LED is solid green. Any keys pressed during this time are interpreted as the first command typed when the messages stop, which might cause the router to power off and start over. It takes a few minutes for the messages to stop.

Note This is only an example of what can display. The system boots differently depending upon the configuration that ships with your system.

Step 4 Observe the initialization process. When the system boot is complete (the process takes a few seconds), the Cisco ASR 1000 RP1 begins to initialize.

Example:

Loading the Default System Boot Image

```
rommon 1 >
rommon 1 > boot
Located rp_super.ppc.nader.5g.evfc.bin
Image size 211681484 inode num 12, bks cnt 51681 blk size 8*512
################################################################################
##########################################
```

```
Boot image size = 211681484 (0xc9e00cc) bytes

Using midplane macaddr
Package header rev 0 structure detected
Calculating SHA-1 hash...done
validate_package: SHA-1 hash:
        calculated 479a7d62:6c128ba8:3616b8da:93cb3224:5c1aeb34
        expected   479a7d62:6c128ba8:3616b8da:93cb3224:5c1aeb34
Image validated

PPC/IOS XE loader version: 0.0.3
loaded at:     00800000 0D1E2004
zimage at:     00807673 009B8C69
initrd at:     009B9000 01006219
isord at:      01007000 0D1DF800
avail ram:     00400000 00800000

Kernel load:
Uncompressing image... dst: 00000000 lim: 00400000 start: 00807673 size: 001B15F6...done.
Now booting the IOS XE kernel
              Restricted Rights Legend

Use, duplication, or disclosure by the Government is
subject to restrictions as set forth in subparagraph
(c) of the Commercial Computer Software - Restricted
Rights clause at FAR sec. 52.227-19 and subparagraph
(c) (1) (ii) of the Rights in Technical Data and Computer
Software clause at DFARS sec. 252.227-7013.

           cisco Systems, Inc.
           170 West Tasman Drive
           San Jose, California 95134-1706

Router# show version
Cisco IOS Software, IOS-XE Software (PPC_LINUX_IOSD-ADVENTERPRISEK9-M), Version 12.2(33)XNA, RELEASE
 SOFTWARE
Technical Support: http://www.cisco.com/techsupport
Copyright (c) 1986-2008 by Cisco Systems, Inc.
Compiled Thu 01-May-08 00:29 by mcpre
Cisco IOS-XE software, Copyright (c) 1986-2008 by Cisco Systems, Inc.
All rights reserved. Certain components of Cisco IOS-XE software are
licensed under the GNU General Public License ("GPL") Version 2.0. The
software code licensed under GPL Version 2.0 is free software that comes
with ABSOLUTELY NO WARRANTY. You can redistribute and/or modify such
GPL code under the terms of GPL Version 2.0. For more details, see the
documentation or "License Notice" file accompanying the IOS-XE software,
or the applicable URL provided on the flyer accompanying the IOS-XE
software.
A summary of U.S. laws governing Cisco cryptographic products may be found at:
http://www.cisco.com/wwl/export/crypto/tool/stqrg.html

If you require further assistance please contact us by sending email to
export@cisco.com.

cisco ASR1002 (RP1) processor with 541737K/6147K bytes of memory.
4 Gigabit Ethernet interfaces
32768K bytes of non-volatile configuration memory.
1869396K bytes of physical memory.
7798783K bytes of eUSB flash at bootflash:.

         --- System Configuration Dialog ---

Would you like to enter the initial configuration dialog? [yes/no]: no
```

```
Press RETURN to get started!

*Feb 19 17:34:27.361: % Error opening nvram:/ifIndex-table No such file or directory
*Feb 19 17:34:28.235: %ASR1000_MGMTVRF-6-CREATE_SUCCESS_INFO: Management vrf Mgmt-intf created with
 ID 4085, ipv4 table-id 0xFF5, ipv6 table-id 0x1E000001
*Feb 19 17:34:29.720: %PARSER-4-BADCFG: Unexpected end of configuration file.

*Feb 19 17:34:29.809: %NETCLK-5-NETCLK_MODE_CHANGE: Network clock source not available. The network
 clock has changed to freerun

*Feb 19 17:34:10.138: %CPPHA-7-SYSREADY: F0: cpp_ha:  CPP client process FMAN-FP (5 of 5) ready.
*Feb 19 17:34:29.824: %LINK-3-UPDOWN: Interface GigabitEthernet0, changed state to up
*Feb 19 17:34:10.269: %IOSXE-6-PLATFORM: F0: cpp_cp:  cpp_mlp_svr_client_bind: cpp_mlp_svr_ifm_init()
 successful
*Feb 19 17:34:10.362: %CPPHA-7-START: F0: cpp_ha:  CPP 0 preparing image /usr/cpp/bin/cpp-mcplo-ucode
*Feb 19 17:34:10.473: %CPPHA-7-START: F0: cpp_ha:  CPP 0 startup init image /usr/cpp/bin/cpp-mcplo-ucode
*Feb 19 17:34:14.688: %CPPHA-7-START: F0: cpp_ha:  CPP 0 running init image /usr/cpp/bin/cpp-mcplo-ucode
*Feb 19 17:34:14.919: %CPPHA-7-READY: F0: cpp_ha:  CPP 0 loading and initialization complete
*Feb 19 17:34:14.919: %CPPHA-6-SYSINIT: F0: cpp_ha:  CPP HA system configuration start.
*Feb 19 17:34:15.179: %IOSXE-6-PLATFORM: F0: cpp_cp: Process CPP_PFILTER_EA_EVENT__API_CALL__REGISTER
*Feb 19 17:34:15.286: %CPPHA-6-SYSINIT: F0: cpp_ha:  CPP HA system enabled.
*Feb 19 17:34:15.287: %CPPHA-6-SYSINIT: F0: cpp_ha:  CPP HA system initializaton complete.
*Feb 19 17:34:30.823: %LINEPROTO-5-UPDOWN: Line protocol on Interface GigabitEthernet0, changed state
 to down
*Feb 19 17:35:12.865: %LINK-5-CHANGED: Interface GigabitEthernet0/0/0, changed state to administratively
 down
*Feb 19 17:35:12.865: %LINK-5-CHANGED: Interface GigabitEthernet0/0/1, changed state to administratively
 down
*Feb 19 17:35:12.865: %LINK-5-CHANGED: Interface GigabitEthernet0/0/2, changed state to administratively
 down
*Feb 19 17:35:12.865: %LINK-5-CHANGED: Interface GigabitEthernet0/0/3, changed state to administratively
 down
*Feb 19 17:35:13.865: %LINEPROTO-5-UPDOWN: Line protocol on Interface GigabitEthernet0/0/0, changed
 state to down
*Feb 19 17:35:13.865: %LINEPROTO-5-UPDOWN: Line protocol on Interface GigabitEthernet0/0/1, changed
 state to down
*Feb 19 17:35:13.866: %LINEPROTO-5-UPDOWN: Line protocol on Interface GigabitEthernet0/0/2, changed
 state to down
*Feb 19 17:35:13.866: %LINEPROTO-5-UPDOWN: Line protocol on Interface GigabitEthernet0/0/3, changed
 state to down
*Feb 19 17:35:19.167: %ASR1000_OIR-6-REMSPA: SPA removed from subslot 0/0, interfaces disabled
*Feb 19 17:35:19.171: %ASR1000_OIR-6-INSCARD: Card (fp) inserted in slot F0
*Feb 19 17:35:19.171: %ASR1000_OIR-6-ONLINECARD: Card (fp) online in slot F0
*Feb 19 17:35:19.187: %ASR1000_OIR-6-INSCARD: Card (cc) inserted in slot 0
*Feb 19 17:35:19.187: %ASR1000_OIR-6-ONLINECARD: Card (cc) online in slot 0
*Feb 19 17:35:19.189: %ASR1000_OIR-6-INSSPA: SPA inserted in subslot 0/0
*Feb 19 17:35:19.452: %SYS-5-RESTART: System restarted --
Cisco IOS Software, IOS-XE Software (PPC_LINUX_IOSD-ADVENTERPRISEK9-M), Version 12.2(33)XNA, RELEASE
 SOFTWARE
Technical Support: http://www.cisco.com/techsupport
Copyright (c) 1986-2008 by Cisco Systems, Inc.
Compiled Thu 20-Dec-07 18:10 by mcpre
*Feb 19 17:35:19.455: %SYS-6-BOOTTIME: Time taken to reboot after reload = 78809 seconds
*Feb 19 17:35:19.551: %CRYPTO-6-ISAKMP_ON_OFF: ISAKMP is OFF
*Feb 19 17:35:19.551: %CRYPTO-6-ISAKMP_ON_OFF: ISAKMP is OFF
*Feb 19 17:35:21.669: %DYNCMD-7-CMDSET_LOADED: The Dynamic Command set has been loaded from the Shell
 Manager
*Feb 19 17:35:22.221: %CRYPTO-6-ISAKMP_ON_OFF: ISAKMP is OFF
Router>
```

Step 5 During the boot process, observe the system LEDs. The LEDs on the shared port adapter go on and off in irregular sequence. They may go on, go out, and go on again for a short time. On the router, the green STATUS LED comes on and stays on.

Verifying the Front Panel LEDs

The front-panel indicator LEDs provide power, activity, and status information useful during bootup. For more detailed information about the LEDs, see Chapter2, "Cisco ASR 1000 Series Routers Component Overview".

Verifying the Hardware Configuration

To display and verify the hardware features, enter the following commands:

- **show version**—Displays the system hardware version; the installed software version; the names and sources of configuration files; the boot images; and the amount of installed DRAM, NVRAM, and flash memory.
- **show diag chassis**—Displays the IDPROM information for the assemblies in the chassis.
- **show diag slot/subslot**—Displays the IDPROM information for the subassemblies in the chassis.

Checking Hardware and Software Compatibility

To check the minimum software requirements of the Cisco IOS software with the hardware installed on your Cisco ASR 1000 Series Routers, Cisco maintains the Software Advisor tool on Cisco.com. This tool does not verify whether Cisco ASR 1000 Series SIPs or SPAs within a system are compatible; but the tool provides the minimum Cisco IOS requirements for individual hardware modules and components.

Note To access this tool, you must have a Cisco.com login account.

To access the Software Advisor, click **Login** at Cisco.com, type **Software Advisor** in the search box, and click **G**o. Click the link for the Software Advisor Tool.

Choose a product family or enter a specific product number to search for the minimum supported software needed for your hardware.

Configuring the Cisco ASR 1000 Series Routers at Startup

This section explains how to create a basic running configuration for your Cisco ASR 1000 Series Routers.

Note You need to acquire the correct network addresses from your system administrator or consult your network plan to determine correct addresses before you can complete the router configuration.

Before continuing the configuration process, check the current state of the router by entering the **show version** command. The **show version** command displays the release of Cisco IOS software that is available on the router.

For information on modifying the configuration after you create it, see the Cisco IOS configuration and command reference guides.

To configure a Cisco ASR 1000 Series Routers from the console, you must connect a terminal or terminal server to the console port. To configure the Cisco ASR 1000 Series Routers over your management Ethernet, you must have the router's IP address available.

Using the Console Interface

To access the command line interface using the console, follow these steps:

SUMMARY STEPS

1. Your system is booting and if you answer No, at the prompt:
2. Then Press Return to enter user EXEC mode. The following prompt appears:
3. From user EXEC mode, enter the enable command as shown in the following example:
4. At the password prompt, enter your system password. If an enable password has not been set on your system, this step may be skipped. The following example shows entry of the password called *enablepass* :
5. When your enable password is accepted, the privileged EXEC mode prompt appears: Router#
6. You now have access to the CLI in privileged EXEC mode and you can enter the necessary commands to complete your desired tasks. To exit the console session, enter the quit command as shown in the following example:

DETAILED STEPS

Step 1 Your system is booting and if you answer No, at the prompt:

Example:

```
        --- System Configuration Dialog ---
Would you like to enter the initial configuration dialog? [yes/no]: no
```

Step 2 Then Press Return to enter user EXEC mode. The following prompt appears:

Router>

Step 3 From user EXEC mode, enter the enable command as shown in the following example:

Router> enable

Step 4 At the password prompt, enter your system password. If an enable password has not been set on your system, this step may be skipped. The following example shows entry of the password called *enablepass* :

Password: enablepass

Step 5 When your enable password is accepted, the privileged EXEC mode prompt appears: Router#

Step 6 You now have access to the CLI in privileged EXEC mode and you can enter the necessary commands to complete your desired tasks. To exit the console session, enter the quit command as shown in the following example:

```
Router# quit
```

Configuring Global Parameters

When you first start the setup program, you must configure the global parameters. These parameters are used for controlling system-wide settings. Perform the following steps to enter the global parameters:

SUMMARY STEPS

1. Connect a console terminal to the console port, and then boot the router.
2. The first sections of the configuration script appear only at an initial system startup. On subsequent uses of the setup facility, the script begins with a System Configuration Dialog as shown below: When asked if you would like to enter the initial configuration dialog, enter yes.

DETAILED STEPS

Step 1 Connect a console terminal to the console port, and then boot the router.

Note This is only an example of the output display; prompts may vary.

When you see this information, you have successfully booted your router:

Example:

```
Restricted Rights Legend

Use, duplication, or disclosure by the Government is
subject to restrictions as set forth in subparagraph
(c) of the Commercial Computer Software - Restricted
Rights clause at FAR sec. 52.227-19 and subparagraph
(c) (1) (ii) of the Rights in Technical Data and Computer
Software clause at DFARS sec. 252.227-7013.

           cisco Systems, Inc.
           170 West Tasman Drive
  San Jose, California 95134-1706
.
.
.
         --- System Configuration Dialog ---

Would you like to enter the initial configuration dialog? [yes/no]: yes

Press RETURN to get started!
```

Step 2 The first sections of the configuration script appear only at an initial system startup. On subsequent uses of the setup facility, the script begins with a System Configuration Dialog as shown below: When asked if you would like to enter the initial configuration dialog, enter yes.

Example:

```
Would you like to enter the initial configuration dialog? [yes/no] yes
At any point you may enter a question mark '?' for help.
Use ctrl-c to abort configuration dialog at any prompt.
```

```
Default settings are in square brackets '[]'.
Basic management setup configures only enough connectivity for management of the system, extended
setup will ask you to configure each interface on the system.
```

Note Basic management setup configures enough connectivity for managing the system; extended setup will ask you to configure each interface on the system. For detailed information about setting global parameters, refer to the *Cisco ASR 1000_Series Aggregation Services Routers Software Configuration Guide.*

Checking the Running Configuration Settings

To check the value of the settings you have entered, enter the show running-config command at the Router# prompt:

```
Router# show running-config
```

To review changes you make to the configuration, use the EXEC mode **show startup-config** command to see the changes and copy run-start stored in NVRAM.

Saving the Running Configuration to NVRAM

To store the configuration or changes to your startup configuration in NVRAM, run the **copy running-config startup-config** command:

Router# **copy running-config startup-config**

Using this command saves the configuration settings that you created in the router using configuration mode and the setup facility. If you fail to do this, your configuration will be lost the next time you reload the router.

If you are using the Cisco ASR 1013 Router, see the caution notice in the Powering Off the Cisco ASR 1000 Series Router Safely, on page 408.

Powering Off the Cisco ASR 1000 Series Router Safely

This section explains how to shut down the Cisco ASR 1000 Series Router. It is recommended that before turning off all power to the chassis, you issue the **reload** command. This insures that the operating system cleans up all the file systems. After the reload operation is complete, then the Cisco ASR 1000 Series Router can be powered off safely.

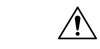

Caution If you are going to power cycle a Cisco ASR 1013 Router, we recommend that you first perform a graceful reload on the router. Power cycling the router without first performing a graceful reload might cause a loss of data stored in the NVRAM. In other words, the configuration file might be lost. Note that this is not observed when a power failure occurs because each active power supply in the two power supply zones is power cycled at the same time during a power failure. If there is a chance that the router might be power cycled without a graceful reload, we recommend that you use the **boot config** *file-system:configuration-file* **nvbypass** command to specify a file system other than the NVRAM for storing the configuration file. The following are examples:Router(config)# **boot config harddisk:config_file.cfg nvbypass**Router(config)# **boot config bootflash:configuration_data.cfg nvbypass**

To remove power from the Cisco ASR 1000 Series Router safely, follow this procedure and see the examples:

SUMMARY STEPS

1. Slip on the ESD-preventive wrist strap that was included in the accessory kit.
2. Enter the **reload** command.
3. Confirm the reload command.
4. After confirming the reload command, wait until the system bootstrap message displays before powering off the system.
5. Remove any power cables from the Cisco ASR 1000 Series Router.

DETAILED STEPS

Step 1 Slip on the ESD-preventive wrist strap that was included in the accessory kit.

Step 2 Enter the **reload** command.

Step 3 Confirm the reload command.

Example:

```
Router# reload
Proceed with reload? [confirm]
Aug 17 00:06:47.051 R0/0: %PMAN-5-EXITACTION: Process manager is exiting: prs exit with reload chassis
 code
```

Step 4 After confirming the reload command, wait until the system bootstrap message displays before powering off the system.

Example:

```
System Bootstrap, Version 12.2(33r)XN2, RELEASE SOFTWARE (fc1)
Technical Support: tap://www.cisco.com/techsupport
Copyright (c) 2008 by cisco Systems, Inc.
Current image running: Boot ROM0
Last reset cause: LocalSoft
ASR1000-RP1 platform with 4194303 Kbytes of main memory
mcp-6ru-1-rp0-rommon 1>
```

Step 5 Remove any power cables from the Cisco ASR 1000 Series Router.

a) For power supplies with a circuit breaker switch, position the switch to the Off (O) position.

b) For power supplies with a Standby switch, place the Standby switch in the Standby position.

Note After powering off the router, wait a minimum of 30 seconds before powering it on again.

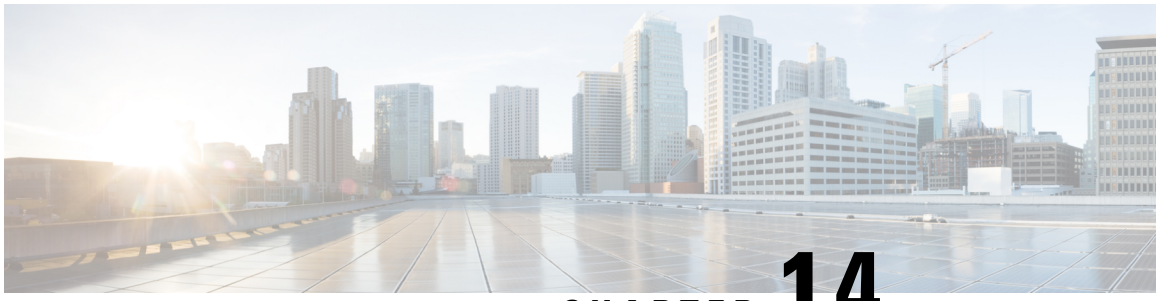

CHAPTER 14

Removing and Replacing FRUs from the Cisco ASR 1000 Series Routers

This chapter describes procedures for removing and replacing field-replaceable units (FRUs) from Cisco ASR 1000 Series Routers:

- Removing and Replacing Cisco ASR 1000 Series Route Processors, on page 411
- Removing and Replacing Cisco ASR 1000 Series Route Processor Internal Hard Drive, on page 414
- Removing and Replacing the Hard Drive on the Cisco ASR 1002-X Router, on page 423
- Removing and Replacing the Hard Drive on the Cisco ASR 1001 Router, on page 426
- Removing and Replacing the Cisco ASR 1000 Series DIMM Memory Modules, on page 429
- Removing and Replacing Cisco ASR 1000 Router eUSB Devices, on page 450
- Removing and Replacing Cisco ASR 1000 Series Router 1 GB USB Flash Token Memory Stick, on page 457
- Minimum Requirements of eUSB Devices Supported on Cisco ASR 1000 Series Routers, on page 459
- Removing and Replacing Cisco ASR 1000 Series Embedded Service Processors, on page 460
- Removing and Replacing Cisco ASR 1000 Series Router SPAs and SPA Interface Processors, on page 463
- Removing and Replacing the Cisco ASR 1006 Router Power Supplies, on page 467
- Removing and Replacing the Cisco ASR 1004 Router Power Supplies, on page 481
- Removing and Replacing the Cisco ASR 1002 Router Power Supplies, on page 490
- Removing and Replacing the Cisco ASR 1013 Router Power Supplies, on page 508
- Removing and Replacing the Cisco ASR 1001 Router Power Supplies, on page 517
- Repacking the Router, on page 529

Removing and Replacing Cisco ASR 1000 Series Route Processors

Keep in mind the following points before you remove and replace a Cisco ASR 1000 Series route processor:

- The Cisco ASR 1002 Router and the Cisco ASR 1002-F Router support only the integrated Cisco ASR1002-RP1.
- If you have two Cisco ASR 1000 Series route processors in the Cisco ASR 1006 or Cisco ASR 1013 router and you want to remove one, do not power down the router. Remove the route processor and insert

a new one because high availability provides for the other route processor to take on the processing tasks for the router.

- The Cisco ASR 1001 Router and the Cisco ASR 1002-X Router support an integrated route processor, embedded services processor, and SIP.

The following sections describe the procedures for removing and replacing the Cisco ASR 1000 Series RP1 and Cisco ASR1000-RP2 in your Cisco ASR 1000 chassis. This section contains these topics:



Warning Only trained and qualified personnel should be allowed to install, replace, or service this equipment. Statement 1030



Warning During this procedure, wear grounding wrist straps to avoid ESD damage to any card. Do not directly touch the backplane with your hand or any metal tool, or you could shock yourself. Statement 94

Removing the Cisco ASR 1000 Series Route Processor from the Cisco ASR 1006, Cisco ASR 1004, and Cisco ASR 1013 Routers

To remove the Cisco ASR 1000 Series route processor (RP1 or RP2) from the Cisco ASR 1006 Router, Cisco ASR 1004 Router and Cisco ASR 1013 Router, follow this procedure:

SUMMARY STEPS

1. Slip on an ESD-preventive wrist strap and attach it to a chassis surface.
2. If connected, remove any I/O cables from the Cisco ASR 1000 Series route processor.
3. Using a number 2 Phillips or a 3/16-inch flat-blade screwdriver, loosen the two captive screws on the faceplate of the Cisco ASR 1000 Series route processor.
4. Using the handles on both sides of the module, with two hands gently slide the module out of the chassis slot.
5. Place the Cisco ASR 1000 Series route processor module on an antistatic surface with its printed circuit board components facing upward or in a static shielding bag.

DETAILED STEPS

Step 1 Slip on an ESD-preventive wrist strap and attach it to a chassis surface.

Step 2 If connected, remove any I/O cables from the Cisco ASR 1000 Series route processor.

Step 3 Using a number 2 Phillips or a 3/16-inch flat-blade screwdriver, loosen the two captive screws on the faceplate of the Cisco ASR 1000 Series route processor.

Step 4 Using the handles on both sides of the module, with two hands gently slide the module out of the chassis slot.

Warning Handle the Cisco ASR 1000 Series route processor by the carrier edges only; never touch the printed circuit board components or connector pins.

Step 5 Place the Cisco ASR 1000 Series route processor module on an antistatic surface with its printed circuit board components facing upward or in a static shielding bag.

Note If you are returning the Cisco ASR 1000 route processor to the factory, immediately place it in a static shielding bag.

What to do next

This completes the procedure for removing an installed Cisco ASR 1000 Series route processor from the Cisco ASR 1006, Cisco ASR 1004, and Cisco ASR 1013 Router.

Replacing the Cisco ASR 1000 Series Route Processor in the Cisco ASR 1006, Cisco ASR 1004, and Cisco ASR 1013 Routers

To replace the Cisco ASR 1000 Series route processor (RP1 or RP2) in the Cisco ASR 1006, Cisco ASR 1004, and Cisco ASR 1013 Routers, follow this procedure:

SUMMARY STEPS

1. Attach an ESD-preventive wrist strap between you and an unfinished chassis surface.
2. Remove the new Cisco ASR 1000 series route processor from its static shielding bag.
3. Using both hands, grasp the Cisco ASR 1000 Series route processor by its metal carrier edges and orient the it so that its printed circuit board components are upward.
4. Align the left and right edges of the Cisco ASR 1000 Series route processor printed circuit board between the route processor slot guides.
5. Gently slide the Cisco ASR 1000 Series route processor all the way into its chassis slot until you feel the connectors seat with the router midplane.
6. Seat the route processor in the router midplane by tightening its captive installation screws with a number 2 Phillips or a 3/16-inch flat-blade screwdriver.

DETAILED STEPS

Step 1 Attach an ESD-preventive wrist strap between you and an unfinished chassis surface.

Step 2 Remove the new Cisco ASR 1000 series route processor from its static shielding bag.

Step 3 Using both hands, grasp the Cisco ASR 1000 Series route processor by its metal carrier edges and orient the it so that its printed circuit board components are upward.

Caution Handle the Cisco ASR 1000 Series route processor by the carrier edges and handle only; never touch the printed circuit board components or connector pins.

Step 4 Align the left and right edges of the Cisco ASR 1000 Series route processor printed circuit board between the route processor slot guides.

Step 5 Gently slide the Cisco ASR 1000 Series route processor all the way into its chassis slot until you feel the connectors seat with the router midplane.

Step 6 Seat the route processor in the router midplane by tightening its captive installation screws with a number 2 Phillips or a 3/16-inch flat-blade screwdriver.

What to do next

This completes the procedure for replacing the Cisco ASR 1000 Series route processor in a Cisco ASR 1006 and Cisco ASR 1004 Router.

Removing and Replacing Cisco ASR 1000 Series Route Processor Internal Hard Drive

Cisco ASR 1000 Series Routers support the Cisco ASR1000-RP1 and the Cisco ASR1000-RP2 route processors. This section contains the following topics:

Cisco ASR1000-RP1 Spare Hard Drive Accessory Kit

The Cisco ASR 1000 Series RP1 spare hard drive ships with an accessory kit.Verify that the following items have been shipped in the accessory kit before you remove and replace a damaged Cisco ASR 1000 Series RP1 module internal hard drive:

- Hard drive assembly
- Two cables
- Tie wrap
- One EMI wrist strap

Follow these procedures to remove and then replace the Cisco ASR1000- RP1 internal hard drive in the Cisco ASR 1006 and Cisco ASR 1004 Router.

Warning During this procedure, wear grounding wrist straps to avoid ESD damage to the card. Do not directly touch the backplane with your hand or any metal tool, or you could shock yourself. Statement 94

Before you begin, read the following important notices:

- The Cisco ASR1000-RP1 requires an OIR (shutdown).
- The reason you would be removing an internal hard drive is that it is failing or failed; so any data recovery may be lost.
- If the drive is functioning, you can back it up to a drive plugged into a USB port using the **archive tar** command.
- To restore the backup copy from an external USB flash memory stick plugged into a USB port to the internal hard drive, type in:

```
archive tar /xtract usb0:asr1000.tar harddisk
```

- Verify that the internal hard drive installation was successful

Removing and Replacing the Cisco ASR1000-RP1 Module Internal Hard Drive

The Cisco ASR 1000 Series route processor (RP1) contains an internal hard drive disk that provides nonvolatile storage in the form of an internal flash disk. The Cisco ASR 1000 Series RP1 module can be configured with either a 40 GB or a 32 GB disk. Both components are field-replaceable on the Cisco ASR 1006 Router and

the Cisco ASR 1004 Router (there is no hard disk in the Cisco ASR 1002 Router). On the front panel of the Cisco ASR 1000 Series RP, the DISK HD LED indicates activity on the hard drive.

This section explains how to remove a hard drive assembly from the Cisco ASR1000-RP1 module and replace it with a new internal hard drive.

Removing the Cisco ASR1000-RP1 Internal Hard Drive

To remove the Cisco ASR1000-RP1 from the Cisco ASR 1000 Series Router, follow this procedure:

SUMMARY STEPS

1. Slip on the ESD-preventive wrist strap that was included in the accessory kit. Loosen the screw fasteners on the Cisco ASR 1000 Series RP1 module.
2. Using the handles on both sides of the module, with two hands gently slide the Cisco ASR1000-RP1 out of the chassis.
3. Place the module on a flat surface free of dust and dirt.
4. Remove the internal hard drive cover:
5. Remove the internal drive cover:
6. Inspect the existing cables and replace them only if they are damaged. If you do not need to replace them, leave the connection to the Cisco ASR 1000 Series Route Processor 1 in place and only remove the connection to the internal hard drive.
7. Carefully disconnect the cables at the rear of the hard drive. These cables are tie-wrapped in to prevent them from disconnecting from the Cisco ASR 1000 Series RP1 itself. If the cables are not damaged, leave the cables connected to the Cisco ASR 1000 Series RP1 with the tie wrap in place. Remove the old hard drive.
8. If the cables are damaged:

DETAILED STEPS

Step 1 Slip on the ESD-preventive wrist strap that was included in the accessory kit. Loosen the screw fasteners on the Cisco ASR 1000 Series RP1 module.

Step 2 Using the handles on both sides of the module, with two hands gently slide the Cisco ASR1000-RP1 out of the chassis.

Step 3 Place the module on a flat surface free of dust and dirt.

Step 4 Remove the internal hard drive cover:

a. Unscrew the fasteners.
b. Slide the cover off.
c. Lift the cover up from the board.

The following figure shows the Cisco ASR1000RP1 module internal hard drive unit.

Figure 218: Cisco ASR1000RP1 Module Internal Hard Drive Unit

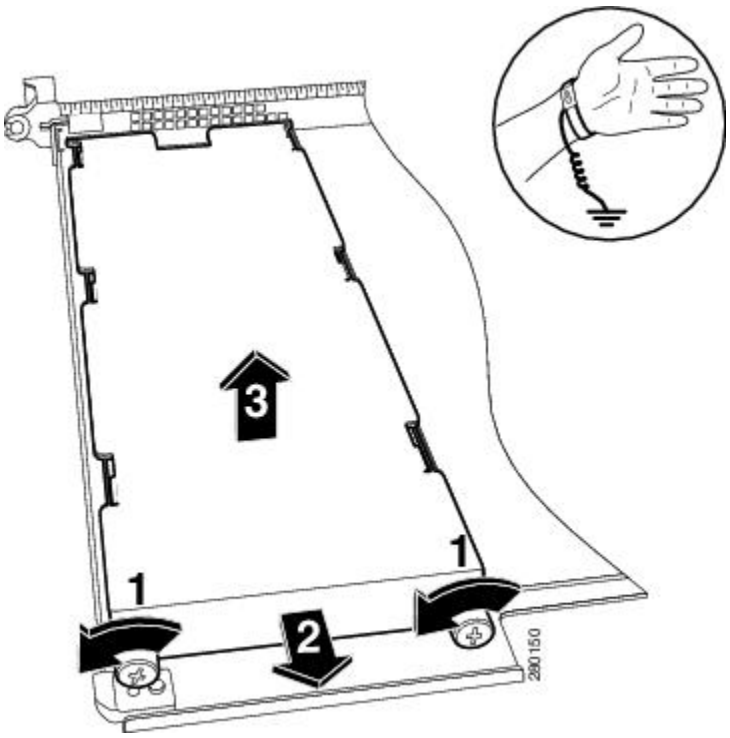

The following figure shows the Cisco ASR1000-RP1 module with the hard drive cover removed.

Figure 219: Cisco ASR1000-RP1 Module Hard Drive Cover and Screw Fastener

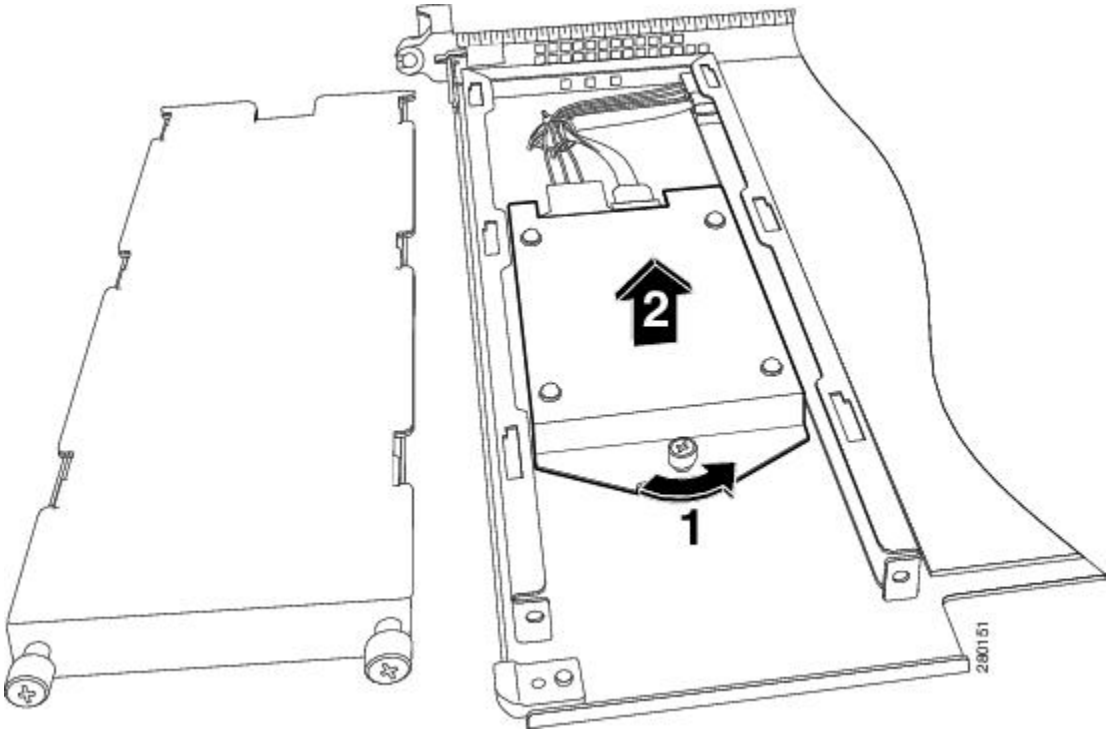

Step 5 Remove the internal drive cover:

a) Using a # 2 Phillips screwdriver or a flat head screwdriver, loosen the screw fasteners on the cover.
b) Slide the cover off as shown in xref Figure 14-2.
c) Lift the cover up from the board.

Step 6 Inspect the existing cables and replace them only if they are damaged. If you do not need to replace them, leave the connection to the Cisco ASR 1000 Series Route Processor 1 in place and only remove the connection to the internal hard drive.

Step 7 Carefully disconnect the cables at the rear of the hard drive. These cables are tie-wrapped in to prevent them from disconnecting from the Cisco ASR 1000 Series RP1 itself. If the cables are not damaged, leave the cables connected to the Cisco ASR 1000 Series RP1 with the tie wrap in place. Remove the old hard drive.

The following figure shows the cables still connected because they do not have to be replaced.

Figure 220: Cisco ASR1000-RP1 Module With Internal Hard Drive Removed

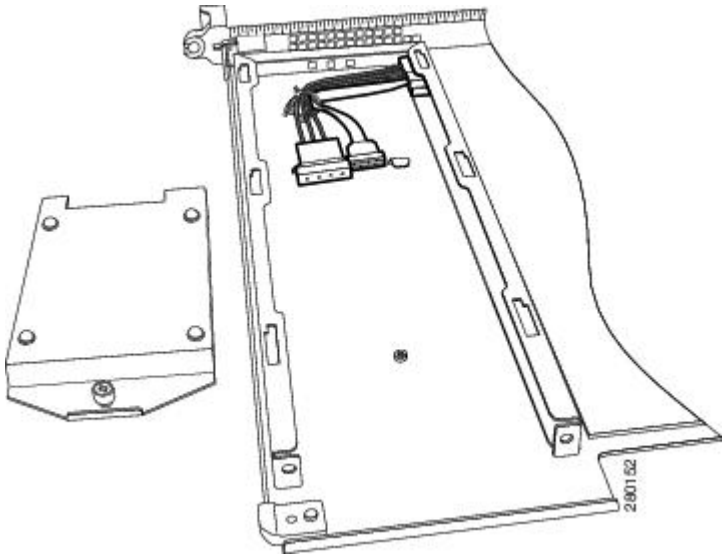

Step 8 If the cables are damaged:

a) Remove the tie wrap around the cables.
b) Disconnect the cables from both the Cisco ASR 1000 Series Route Processor 1 connector and the internal hard drive connector as shown in the following figure.

Figure 221: Cisco ASR1000-RP1 Module Internal Hard Drive and Module Base

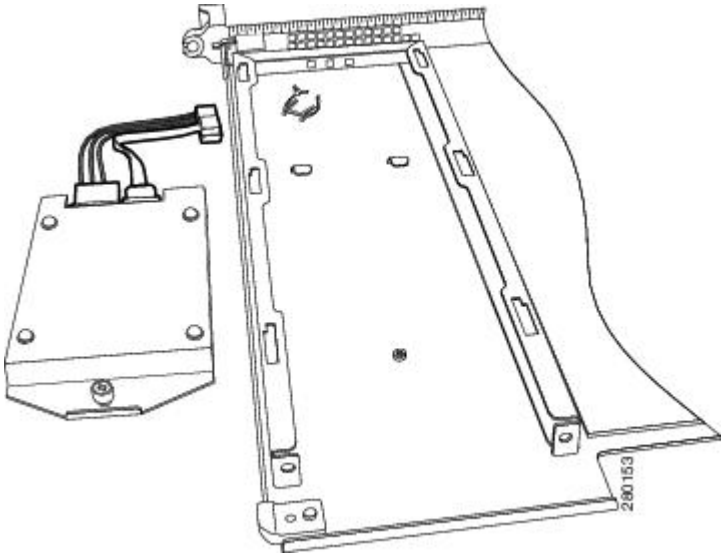

This completes the procedure for disconnecting the Cisco ASR 1000 Series RP internal hard drive.

Replacing the Cisco ASR1000-RP1 Internal Hard Drive

To replace the Cisco ASR1000-RP1 internal hard drive and insert the Cisco ASR 1000 Series Route Processor 1 into the Cisco ASR 1000 Series Router, follow these steps:

SUMMARY STEPS

1. On the Cisco ASR1000-RP1, carefully align the new hard drive unit with its screw fastener to the base screw on the bottom of the module.
2. Reconnect the two cables to the rear of the hard drive. These are keyed for easy connection.
3. Align hard drive module to carrier base tabs, align the module fastener to base screw mate by hand, and then tighten with screw driver.
4. Replace the cover by aligning the tabs in the slot and tightening the screw fasteners.
5. With two hands, grab the handles on the Cisco ASR1000-RP1 module and slide it back into its slot in the Cisco ASR 1000 Series Router and tighten the captive screw.

DETAILED STEPS

Step 1 On the Cisco ASR1000-RP1, carefully align the new hard drive unit with its screw fastener to the base screw on the bottom of the module.

Step 2 Reconnect the two cables to the rear of the hard drive. These are keyed for easy connection.

The following figure shows the Cisco ASR1000-RP1 module internal hard drive and module base.

Figure 222: Cisco ASR1000-RP1 Module Internal Hard Drive and Module Base

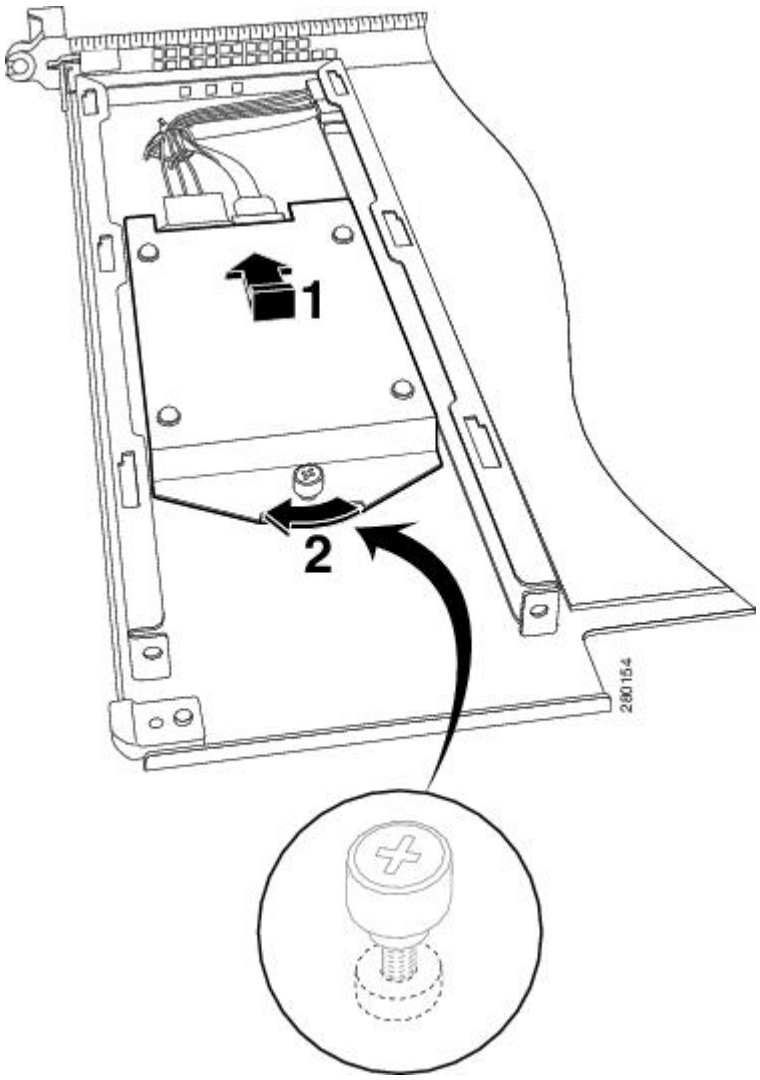

1	Hard drive module fastener	2	Carrier mating fastener

Step 3 Align hard drive module to carrier base tabs, align the module fastener to base screw mate by hand, and then tighten with screw driver.

Step 4 Replace the cover by aligning the tabs in the slot and tightening the screw fasteners.

Step 5 With two hands, grab the handles on the Cisco ASR1000-RP1 module and slide it back into its slot in the Cisco ASR 1000 Series Router and tighten the captive screw.

Removing and Replacing the Cisco ASR1000-RP2 Module Internal Hard Drive

This section explains how to remove a hard drive assembly from the Cisco ASR 1000 Series RP2 module and replace it with a new internal hard drive.

Warning During this procedure, wear grounding wrist straps to avoid ESD damage to the card. Do not directly touch the backplane with your hand or any metal tool, or you could shock yourself. Statement 94

Before you begin, read the following important notices:

- The form-factor internal hard drive is accessible from the front panel of the Cisco ASR1000-RP2 and supports the online insertion and removal feature (OIR) using the following CLI commands for the standby and active RP2:
  - **request platform hardware filesystem harddisk: offline** (Unmounts the hard disk on the active RP2.)
  - **request platform hardware filesystem harddisk: online** (Mounts the hard disk on the active RP2.) If the disk is not provisioned properly, this command will provision the disk.
  - **request platform hardware filesystem stby-harddisk: offline** (Unmounts the hard disk on the standby RP2.)
  - **request platform hardware filesystem stby-harddisk: online** (Mounts the hard disk on the standby RP2. If the disk is not provisioned properly, this command will provision the disk.)
- The reason you would be removing an internal hard drive is that it is failing or failed; so any data recovery may be lost.
- If the drive is functioning, you can back it up to a drive plugged into a USB port using the **archive tar** command.

Removing the Cisco ASR1000-RP2 Internal Hard Drive

To remove the Cisco ASR1000-RP2 internal hard drive from the Cisco ASR 1006 Router and Cisco ASR 1004 Router, follow this procedure:

SUMMARY STEPS

1. Run the **request platform hardware filesystem harddisk: offline** command.
2. Slip on an ESD-preventive wrist strap.
3. From the front panel of the Cisco ASR1000-RP2, unscrew the fastener screw (see the following figure).
4. Pull the internal hard drive out as shown in the following figure.
5. Place the component in an antistatic bag if you are returning it.
6. Wait until the following console message is displayed:

DETAILED STEPS

Step 1 Run the **request platform hardware filesystem harddisk: offline** command.

Step 2 Slip on an ESD-preventive wrist strap.

Step 3 From the front panel of the Cisco ASR1000-RP2, unscrew the fastener screw (see the following figure).

Figure 223: Cisco ASR1000-RP2 Front Panel

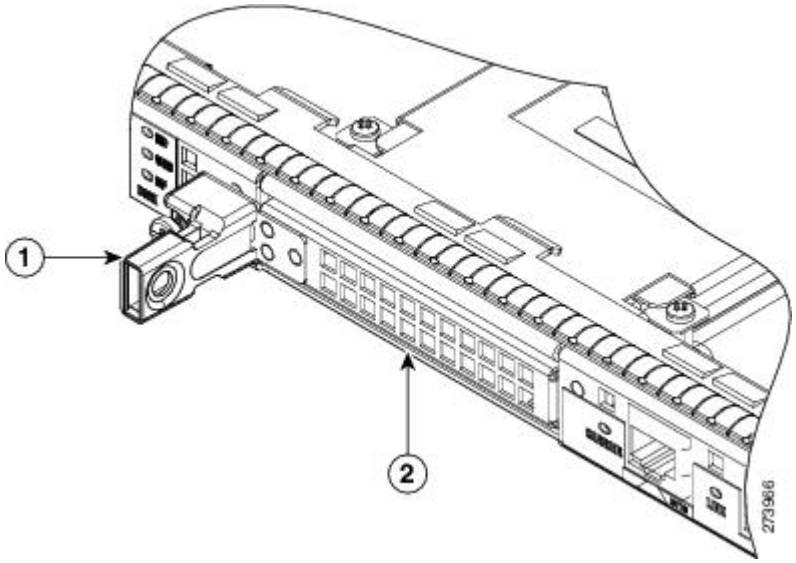

1	Internal hard drive fastener screw	2	Internal hard drive

Step 4 Pull the internal hard drive out as shown in the following figure.

Figure 224: Cisco ASR1000-RP2 Internal Hard Drive

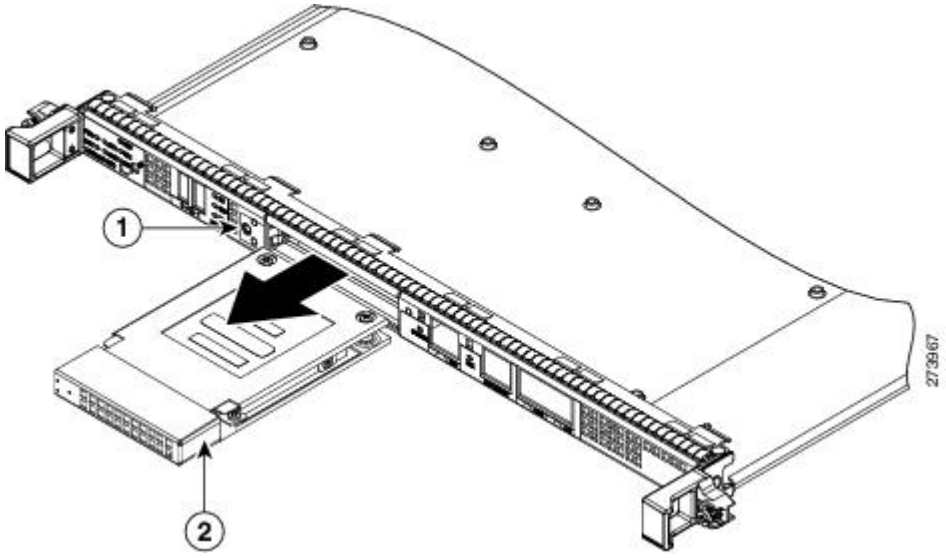

1	Internal hard drive fastener screw location	2	Internal hard drive

Step 5 Place the component in an antistatic bag if you are returning it.

Step 6 Wait until the following console message is displayed:

Example:

```
%IOSXE-0-PLATFORM: R0/0: udev: harddisk: has been removed
```

What to do next

You have successfully removed the Cisco ASR1000-RP2 hard drive.

Replacing the Cisco ASR1000-RP2 Internal Hard Drive

To replace the Cisco ASR1000-RP2 internal hard drive and insert the Cisco ASR1000-RP 2 into the Cisco ASR 1000 Series Router, follow these steps:

SUMMARY STEPS

1. Carefully slide the internal hard drive unit into the Cisco ASR1000-RP2 faceplate slot. The component is keyed for easy insertion.
2. Tighten the fastener screw on the front panel.
3. Wait until the following console message is displayed:
4. Verify the disk is working by running: **dir harddisk**

DETAILED STEPS

Step 1 Carefully slide the internal hard drive unit into the Cisco ASR1000-RP2 faceplate slot. The component is keyed for easy insertion.

Step 2 Tighten the fastener screw on the front panel.

Step 3 Wait until the following console message is displayed:

Example:

```
%IOSXE-0-PLATFORM: R0/0: udev: harddisk: file system ready” appears.
```

If, after several minutes, the above message is not displayed, run:

request platform hardware filesystem harddisk: online

Note The only reason the system would not be able to automatically mount the new hard disk following a physical insertion is if the disk is not partitioned correctly.

Step 4 Verify the disk is working by running: **dir harddisk**

What to do next

You have completed the steps required to replace the Cisco ASR1000-RP2 internal hard drive.

Removing and Replacing the Hard Drive on the Cisco ASR 1002-X Router

The Cisco ASR 1002-X Router supports an optional removable hard drive. This section explains how to remove and replace this hard drive.

Warning During this procedure, wear grounding wrist straps to avoid ESD damage to the card. Do not directly touch the backplane with your hand or any metal tool, or you could shock yourself. Statement 94

Before you begin, read the following important notices:

- The hard drive is accessible from the front panel of the router and supports the online insertion and removal feature (OIR) using the following CLI commands:
  - **request platform hardware filesystem harddisk: offline** (unmounts the hard disk)
  - **request platform hardware filesystem harddisk: online** (mounts the hard disk.)
- The reason you may be removing an internal hard drive is that it is failing or failed; so any data recovery may be lost.
- If the drive is functioning, you can back it up to a drive plugged into a USB port using the **archive tar** command.

Removing the Hard Drive from the Cisco ASR 1002-X Router

To remove the hard drive from the Cisco ASR 1002-X Router, follow this procedure:

SUMMARY STEPS

1. Run the **request platform hardware filesystem harddisk: offline** command.
2. Slip on an ESD-preventive wrist strap.
3. From the front panel of the router, unscrew the fastener screws by using a # 2 Phillips screwdriver or a flat head screwdriver (see xref Figure 14-6).
4. Pull the hard drive out as shown in xref Figure 14-7.
5. Place the hard drive in an antistatic bag if you are returning it.
6. Wait until the following console message is displayed:

DETAILED STEPS

Step 1 Run the **request platform hardware filesystem harddisk: offline** command.

Step 2 Slip on an ESD-preventive wrist strap.

Step 3 From the front panel of the router, unscrew the fastener screws by using a # 2 Phillips screwdriver or a flat head screwdriver (see xref Figure 14-6).

Figure 225: Cisco ASR1002-X Router Front Panel

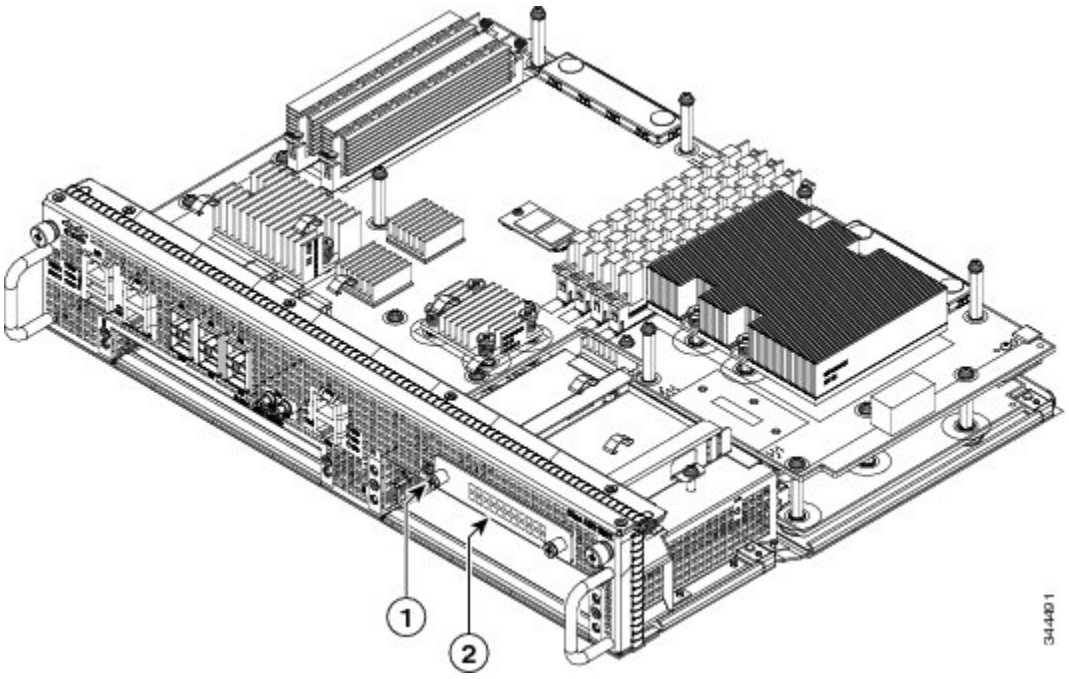

1	Internal hard drive fastener screw	2	Internal hard drive

Step 4 Pull the hard drive out as shown in xref Figure 14-7.

Figure 226: Cisco ASR1002-X Router Hard Drive

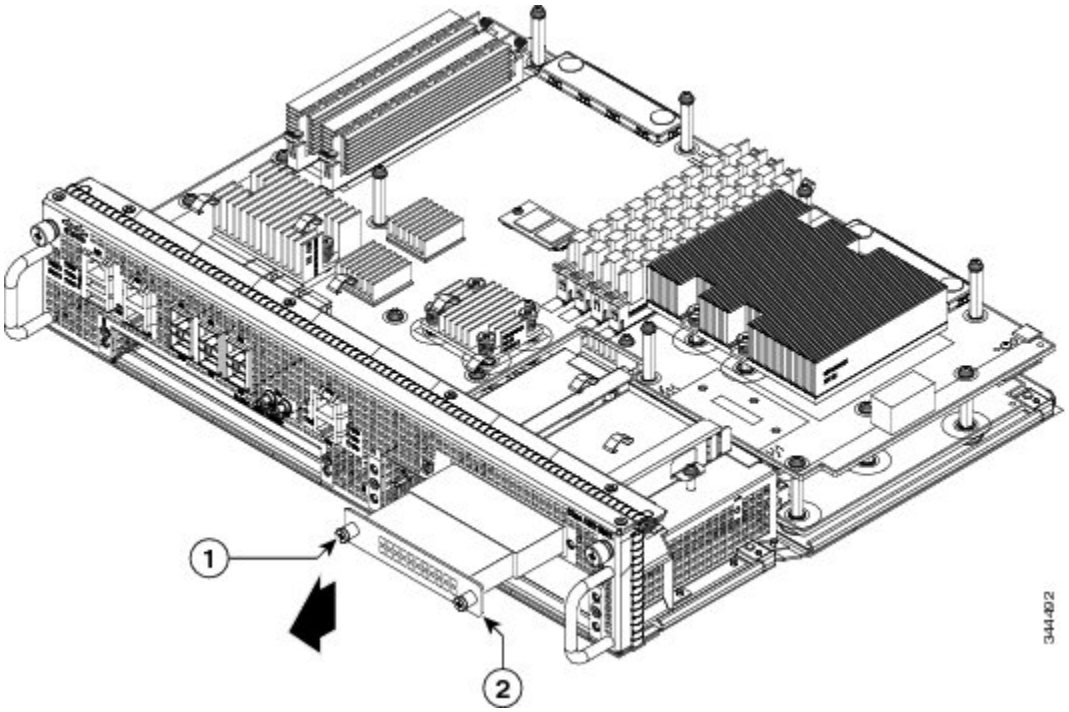

1	Hard drive fastener screw location	2	Hard drive

Step 5 Place the hard drive in an antistatic bag if you are returning it.

Step 6 Wait until the following console message is displayed:

Example:

```
%IOSXE-0-PLATFORM: R0/0: udev: harddisk: has been removed
```

What to do next

You have successfully removed the hard drive from the Cisco ASR 1002-X Router.

Replacing the Hard Drive on the Cisco ASR 1002-X Router

To insert or replace the hard drive on the Cisco ASR 1002-X Router, follow this procedure:

SUMMARY STEPS

1. Carefully slide the hard drive unit into the slot on the front panel. The component is keyed for easy insertion.
2. Tighten the fastener screw on the front panel by using a # 2 Phillips screwdriver or a flat head screwdriver.
3. Wait until the following console message is displayed:
4. Verify that the hard drive is working by running the following command:

DETAILED STEPS

Step 1 Carefully slide the hard drive unit into the slot on the front panel. The component is keyed for easy insertion.

Step 2 Tighten the fastener screw on the front panel by using a # 2 Phillips screwdriver or a flat head screwdriver.

Step 3 Wait until the following console message is displayed:

Example:

```
%IOSXE-0-PLATFORM: R0/0: udev: harddisk: file system ready” appears.
```

If this message is not displayed after a few minutes, run the following command:

request platform hardware filesystem harddisk: online

Note If the new hard drive system does not get mounted automatically, the disk may not be partitioned correctly.

Step 4 Verify that the hard drive is working by running the following command:

dir harddisk

What to do next

You have successfully replaced the hard drive on the Cisco ASR 1002-X Router.

Removing and Replacing the Hard Drive on the Cisco ASR 1001 Router

The Cisco ASR 1001 Router supports an optional removable hard drive. This section explains how to remove and replace this hard drive.

Warning During this procedure, wear grounding wrist straps to avoid ESD damage to the card. Do not directly touch the backplane with your hand or any metal tool, or you could shock yourself. Statement 94

Before you begin, read the following important notices:

- The hard drive is accessible from the front panel of the router and supports the online insertion and removal feature (OIR) using the following CLI commands:
  - **request platform hardware filesystem harddisk: offline** (unmounts the hard disk)
  - **request platform hardware filesystem harddisk: online** (mounts the hard disk.)
- The reason you may be removing an internal hard drive is that it is failing or failed; so any data recovery may be lost.
- If the drive is functioning, you can back it up to a drive plugged into a USB port using the **archive tar** command.

Removing the Hard Drive from the Cisco ASR 1001 Router

To remove the hard drive from the Cisco ASR 1001 Router, follow this procedure:

SUMMARY STEPS

1. Run the **request platform hardware filesystem harddisk: offline** command.
2. Slip on an ESD-preventive wrist strap.
3. From the front panel of the router, unscrew the fastener screws by using a # 2 Phillips screwdriver or a flat head screwdriver (see xref Figure 14-6).
4. Pull the hard drive out as shown in xref Figure 14-7.
5. Place the hard drive in an antistatic bag if you are returning it.
6. Wait until the following console message is displayed:

DETAILED STEPS

Step 1 Run the **request platform hardware filesystem harddisk: offline** command.

Step 2 Slip on an ESD-preventive wrist strap.

Step 3 From the front panel of the router, unscrew the fastener screws by using a # 2 Phillips screwdriver or a flat head screwdriver (see xref Figure 14-6).

Figure 227: Cisco ASR1001 Router Front Panel

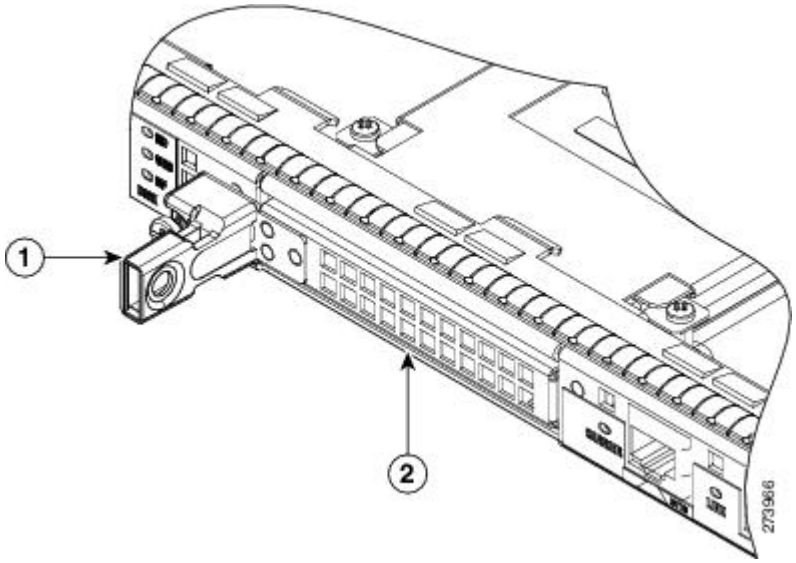

1	Internal hard drive fastener screw	2	Internal hard drive

Step 4 Pull the hard drive out as shown in xref Figure 14-7.

Figure 228: Cisco ASR1001 Router Hard Drive

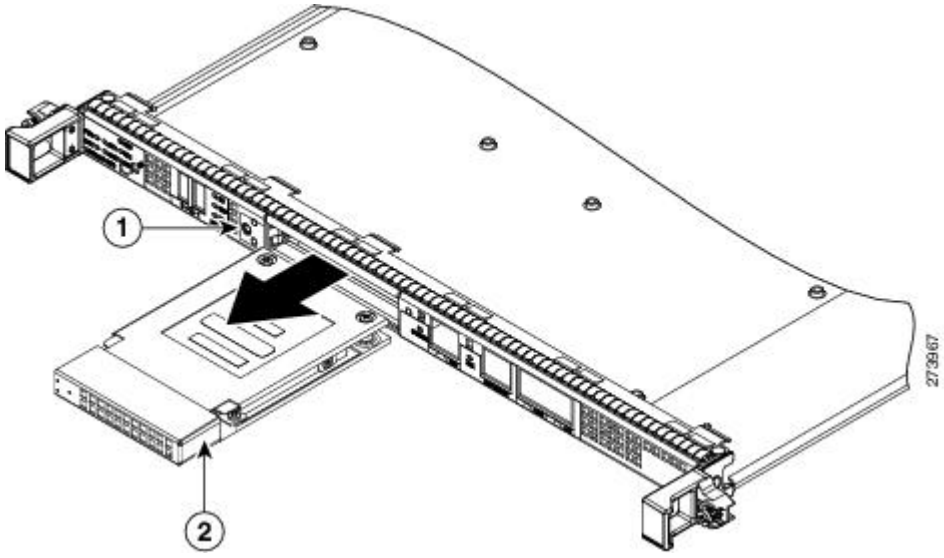

1	Hard drive fastener screw location	2	Hard drive

Step 5 Place the hard drive in an antistatic bag if you are returning it.

Step 6 Wait until the following console message is displayed:

Example:

```
%IOSXE-0-PLATFORM: R0/0: udev: harddisk: has been removed
```

What to do next

You have successfully removed the hard drive from the Cisco ASR 1001 Router.

Replacing the Hard Drive on the Cisco ASR 1001 Router

To insert or replace the hard drive on the Cisco ASR 1001 Router, follow this procedure:

SUMMARY STEPS

1. Carefully slide the hard drive unit into the slot on the front panel. The component is keyed for easy insertion.
2. Tighten the fastener screw on the front panel by using a # 2 Phillips screwdriver or a flat head screwdriver.
3. Wait until the following console message is displayed:
4. Verify that the hard drive is working by running the following command:

DETAILED STEPS

Step 1 Carefully slide the hard drive unit into the slot on the front panel. The component is keyed for easy insertion.

Step 2 Tighten the fastener screw on the front panel by using a # 2 Phillips screwdriver or a flat head screwdriver.

Step 3 Wait until the following console message is displayed:

Example:

```
%IOSXE-0-PLATFORM: R0/0: udev: harddisk: file system ready” appears.
```

If this message is not displayed after a few minutes, run the following command:

request platform hardware filesystem harddisk: online

Note If the new hard drive system does not get mounted automatically, the disk may not be partitioned correctly.

Step 4 Verify that the hard drive is working by running the following command:

dir harddisk

What to do next

You have successfully replaced the hard drive on the Cisco ASR 1001 Router.

Removing and Replacing the Cisco ASR 1000 Series DIMM Memory Modules

Cisco ASR 1000 Series Routers support the Cisco ASR1000-RP1 and the Cisco ASR1000-RP2 route processor DIMM memory modules for system DRAM. This section describes how to replace the DIMMs on the Cisco ASR1000-RP1, the Cisco ASR1000-RP2 route processors, the Cisco ASR 1001, and the Cisco ASR 1002-X routers.

The following table shows the Cisco ASR1000-RP1 and Cisco ASR1000-RP2 memory design.

Table 91: Cisco ASR 1000 Series Route Processor Memory Support

Cisco ASR1000-RP1	Cisco ASR1000-RP2
Supports up to 4 GB memory	Supports up to 16 GB memory
• 1 GB (2 GB) miniDIMMs	• 4 GB dual rank VLP DIMMs
• DDR-533	• Up to 4 DIMMs with up to two DIMMs per channel
—	• Allowable memory options of 4 GB, 8 GB, or 16 GB
—	• DDR-667

You might need to upgrade the DIMM for the following reasons:

- You have upgraded to a new Cisco IOS feature set or release that requires more memory.
- You are using very large routing tables or many protocols.

This section contains the following topics:

Removing and Replacing the DIMM Memory Modules on the Cisco ASR 1006 Router and the Cisco ASR 1013 Router

The Cisco ASR 1006 Router and the Cisco ASR 1013 Router have redundant RPs. The following is an overview of the steps to remove and replace the DIMM memory modules on these routers:

SUMMARY STEPS

1. Remove the standby RP by performing the procedure described in the xref “Removing the Cisco ASR 1000 Series Route Processor from the Cisco ASR 1006, Cisco ASR 1004, and Cisco ASR 1013 Routers” section.
2. Remove the DIMM memory module from the standby RP by performing one of the following procedures:
   - Removing and Replacing the Cisco ASR1000-RP1 DIMM Memory Modules

     Removing the Cisco ASR1000-RP2 DIMMs

3. Insert the new DIMM memory module on the standby RP by performing one of the following procedures:
   - Removing and Replacing the Cisco ASR1000-RP1 DIMM Memory Modules

     Removing the Cisco ASR1000-RP2 DIMMs
4. Insert the standby RP by performing the procedure described in the xref "Removing the Cisco ASR 1000 Series Route Processor from the Cisco ASR 1006, Cisco ASR 1004, and Cisco ASR 1013 Routers" section.
5. Verify the memory upgrade on the standby RP by running the following commands:
6. Use the **redundancy force-switchover** command to switch the upgraded standby RP to the active state. The RP that was in the active state moves to the standby state.
7. Repeat Step 1 through Step 5 on the standby RP.

DETAILED STEPS

Step 1 Remove the standby RP by performing the procedure described in the xref "Removing the Cisco ASR 1000 Series Route Processor from the Cisco ASR 1006, Cisco ASR 1004, and Cisco ASR 1013 Routers" section.

Step 2 Remove the DIMM memory module from the standby RP by performing one of the following procedures:
- Removing and Replacing the Cisco ASR1000-RP1 DIMM Memory Modules

  Removing the Cisco ASR1000-RP2 DIMMs

Step 3 Insert the new DIMM memory module on the standby RP by performing one of the following procedures:
- Removing and Replacing the Cisco ASR1000-RP1 DIMM Memory Modules

  Removing the Cisco ASR1000-RP2 DIMMs

Step 4 Insert the standby RP by performing the procedure described in the xref "Removing the Cisco ASR 1000 Series Route Processor from the Cisco ASR 1006, Cisco ASR 1004, and Cisco ASR 1013 Routers" section.

Step 5 Verify the memory upgrade on the standby RP by running the following commands:

Example:

```
Router# configure terminal
Router(config-red)# redundancy
Router(config-r-mc)# main-cpu
Router(config-r-mc)# standby console enable
Router(config-r-mc)# end
Router-stby# show version
Cisco IOS Software, IOS-XE Software (PPC_LINUX_IOSD-ADVENTERPRISEK9-M), Experimental Version
15.2(20111220:221816) [v152_2_s_xe36_throttle-tozhang-xe36_ios 114]
.
.
.
cisco ASR1006 (RP1) processor with 1689519K/6147K bytes of memory.
Processor board ID FOX1224G4VX
20 Gigabit Ethernet interfaces
32768K bytes of non-volatile configuration memory.
4194304K bytes of physical memory.
955063K bytes of eUSB flash at bootflash:.
39004543K bytes of SATA hard disk at harddisk:.
.
.
.
```

Step 6 Use the **redundancy force-switchover** command to switch the upgraded standby RP to the active state. The RP that was in the active state moves to the standby state.

Step 7 Repeat Step 1 through Step 5 on the standby RP.

Removing and Replacing the Cisco ASR1000-RP1 DIMM Memory Modules

The Cisco ASR1000-RP1 module memory interface supports two DDR-II SDRAM MiniDIMMs with ECC protection.



Note Unlike the Cisco ASR 1006, ASR 1004, and ASR 1013 routers, the DIMM memory interface is not field-replaceable on the Cisco ASR 1002 router.

This section provides instructions for removing and replacing the Cisco ASR1000-RP1 Mini DIMM memory modules.



Note The Cisco ASR 1000 Series RP memory spares are sold as pairs. For example, the 2 GB memory spare (M-ASR1K-RP1-2GB=) is sold as a pair of 1 GB modules and the 4 GB memory spare (M-ASR1K-RP1-4GB=) is sold as a pair of 2 GB modules. Memory repairs or upgrades must utilize the complete memory pairs as shipped from Cisco. For example, if 1 of the 2 memory modules were to fail on the Cisco ASR 1000route processor, then both memory modules must be removed and replaced with a spare memory pair (as shipped from Cisco) and the failing memory should be returned as a pair to Cisco.To prevent the system from operating incorrectly, do not mix modules from different vendors. The modules might not be compatible with each other.



Warning During these procedures, wear grounding wrist straps to avoid ESD damage to the card. Do not directly touch the backplane with your hand or any metal tool, or you could shock yourself. Statement 94

The following table shows the slots that are supported for inserting memory DIMMs in Cisco ASR1000-RP1

Table 92: Cisco ASR1000-RP1 Supported Slots for Inserting Memory DIMMs

Memory PID Option	Slot 0	Slot 1
M-ASR1K-RP1-4GB=	2 GB module	2 GB module
M-ASR1K-RP1-2GB=	1 GB module	1GB module

Perform the following steps before you begin:

- Use an ESD-preventive wrist strap
- Back up data before replacing a eUSB device.
- The card is keyed and slotted for easier connection.
- Never wiggle the DIMM.
- Handle the connector according to the instructions (see xref Figure 14-15).

To replace or upgrade the Cisco ASR1000-RP1 DIMM memory spare, follow these steps:

SUMMARY STEPS

1. Attach an ESD-preventive wrist strap between you and an unpainted router surface.
2. Locate the DIMM on the system board.
3. Press both spring latches outward to release the DIMM.
4. Pull the latches away from the DIMM on both edges. This lifts the DIMM slightly. Gently lift the DIMM free from the DIMM connector, taking care not to touch the pins that insert into the socket.
5. Place the DIMM in an antistatic bag to protect the DIMM from ESD damage.
6. To install the DIMM memory card, locate the notches and align the DIMM with the socket before inserting it.
7. Make certain that both latches on the DIMM connector are open.
8. Gently insert the new DIMM, taking care not to damage the pins on the edge of the DIMM.Using two hands, place the index fingers on the edge of the DIMM and place the thumbs on the socket, being careful not to touch the socket pins. Press on the back of the DIMM towards the socket by squeezing the index fingers and the thumbs together, being careful to only apply force onto the DIMM parallel with the plane of the DIMM.
9. To allow the DIMM to slide into the socket smoothly with minimum force, one can alternate applying force back and forth between the left hand and the right hand, allowing one side to engage prior to the other. Carefully and firmly press the DIMM into the connector until the spring latches lock the DIMM in place. See Figure 14-12.
10. Slide the DIMM one side at a time. Use light insertion force and insert smoothly; but make certain the DIMM is inserted *straight* .

DETAILED STEPS

Step 1 Attach an ESD-preventive wrist strap between you and an unpainted router surface.

Step 2 Locate the DIMM on the system board.

Note The DIMMs shown in xref Figure 14-12 and Figure 14-13 are representative and might not look exactly like the DIMMs used on the RP; but the procedure is the same.

Step 3 Press both spring latches outward to release the DIMM.

The following figure shows the Cisco ASR 1000 Series RP DIMM module spring latches.

Figure 229: Cisco ASR 1000 Series RP DIMM Module Spring Latches

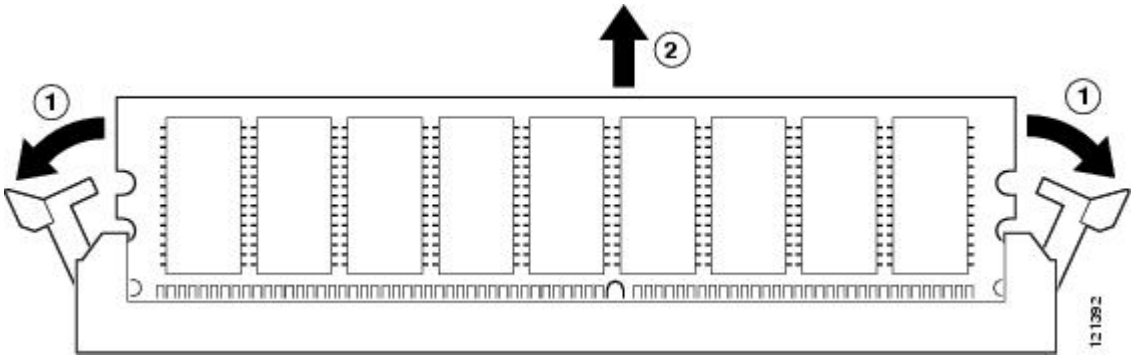

insert callout table

1 - Pull spring clips outward.

2 - Pull DIMM out.

Step 4 Pull the latches away from the DIMM on both edges. This lifts the DIMM slightly. Gently lift the DIMM free from the DIMM connector, taking care not to touch the pins that insert into the socket.

Step 5 Place the DIMM in an antistatic bag to protect the DIMM from ESD damage.

Caution Forcing the DIMM into the socket can damage the DIMM. Use the notches on the DIMM to align the DIMM in the DIMM socket before inserting it (see the following figure).

Figure 230: Cisco ASR 1000 Series RP DIMM Module Notch Location

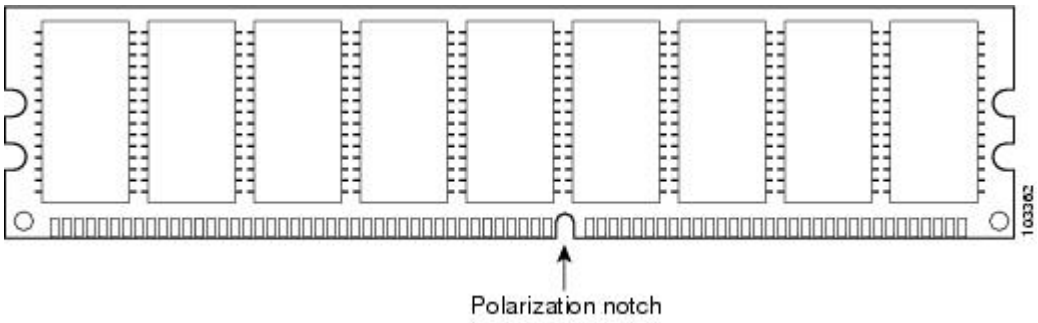

Step 6 To install the DIMM memory card, locate the notches and align the DIMM with the socket before inserting it.

The following figure shows the Cisco ASR 1000 Series RP DIMM module alignment.

Figure 231: Cisco ASR 1000 Series RP DIMM Module Alignment

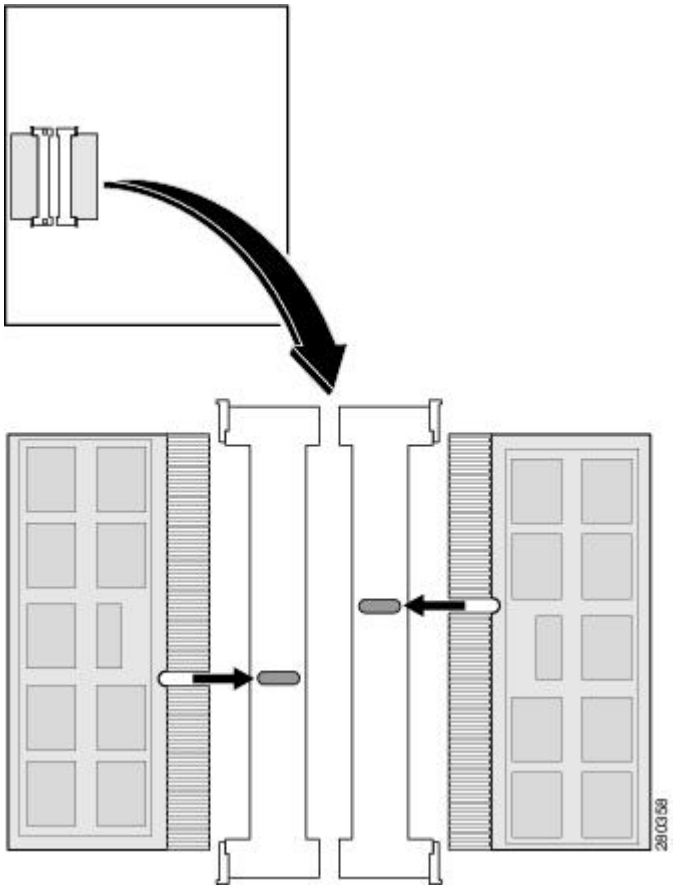

Note Hold the DIMM with two hands at its edge and insert the card.

Step 7 Make certain that both latches on the DIMM connector are open.

Step 8 Gently insert the new DIMM, taking care not to damage the pins on the edge of the DIMM.Using two hands, place the index fingers on the edge of the DIMM and place the thumbs on the socket, being careful not to touch the socket pins. Press on the back of the DIMM towards the socket by squeezing the index fingers and the thumbs together, being careful to only apply force onto the DIMM parallel with the plane of the DIMM.

Step 9 To allow the DIMM to slide into the socket smoothly with minimum force, one can alternate applying force back and forth between the left hand and the right hand, allowing one side to engage prior to the other. Carefully and firmly press the DIMM into the connector until the spring latches lock the DIMM in place. See Figure 14-12.

Caution Strong insertion force introduces excessive mechanical stress on the DIMM. To prevent any stress on the soldering joints, there should be **no** up, down, or wiggling motion to be done on the DIMM during the insertion. Forcing the DIMM into the socket can damage the DIMM. Check that the notches on the DIMM are properly aligned with the ones on the connector before fully inserting the DIMM.

The following figure shows how the Cisco ASR 1000 Series RP DIMM module must not be handled.

Figure 232: Handling Cisco ASR 1000 Series RP DIMM Module

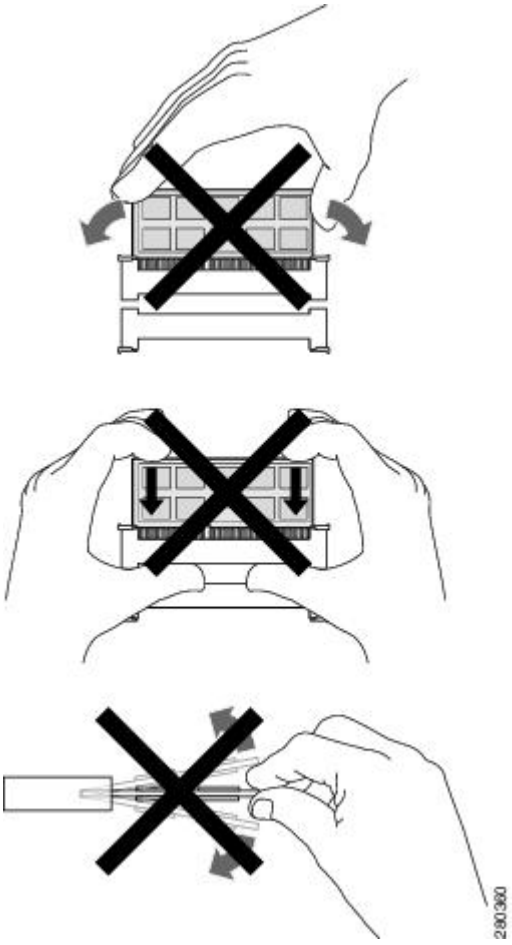

Step 10 Slide the DIMM one side at a time. Use light insertion force and insert smoothly; but make certain the DIMM is inserted *straight* .

Note Make sure you perform steps 3 thru 11 for both DIMMs on the RP 1 before you replace the Cisco ASR1000-RP1 in the system. Replace the Cisco ASR1000-RP1. All DIMMS must be replaced; not just one.

What to do next

This completes the procedure for replacing a DIMM memory module on the Cisco ASR1000-RP1.

Removing and Replacing the Cisco ASR1000-RP2 DIMM Memory Modules

Perform the following steps before you begin:

- Use an ESD-preventive wrist strap.
- Back up data that you want to save before replacing a eUSB device.
- Note that the component is keyed and slotted for easier connection.

- To ensure the DIMMs are functioning properly, all four DIMMs must be replaced at the same time and must be of the same manufacturer and part number (since vendors may have multiple versions of the DIMM).

The following table shows the slots that are supported for inserting memory DIMMs in Cisco ASR1000-RP2

Table 93: Cisco ASR1000-RP2 Supported Slots for Inserting Memory DIMMs

Memory PID Option	Slot 0	Slot 1	Slot 2	Slot 3
M-ASR1K-RP2-8GB=	2 GB module	2 GB module	2 GB module	2 GB module
M-ASR1K-RP2-16GB=	4 GB Module	4 GB Module	4 GB Module	4 GB Module

This section describes how to remove and then replace the Cisco ASR1000-RP2 module DIMMs (see the following figure).

Figure 233: Cisco ASR1000-RP2 Module Internal Component Location

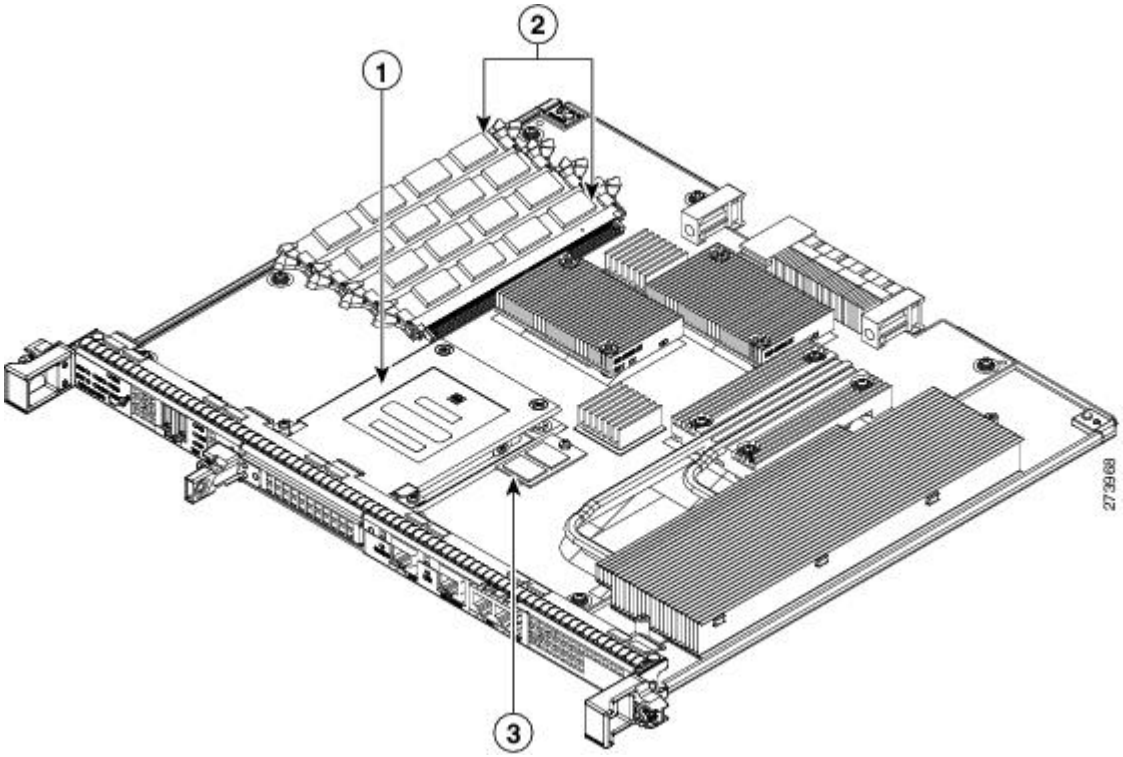

1	Internal hard drive location	3	Cisco ASR1000-RP2 internal eUSB device
2	Cisco ASR1000-RP2 DIMM location	—	—

Removing the Cisco ASR1000-RP2 DIMMs

Follow these steps to remove the Cisco ASR1000-RP2 DIMMs:

SUMMARY STEPS

1. With a wrist strap on, loosen the two captive screws on the faceplate of the Cisco ASR 1000 Series RP.
2. Using the handles on both sides of the module, with two hands gently slide the module out of the chassis slot.
3. Place the route processor on an antistatic mat or pad and ensure that you are wearing an antistatic device, such as a wrist strap.
4. Position the route processor so that the faceplate is toward you and the edge connector is away from you.
5. Locate the DIMMs on the ASR1000-RP2. See xref Figure 14-16, callout 2.
6. For the DIMM you want to remove, pull down the lever on the DIMM socket to release the DIMM from the socket. See the following figure.
7. When one end of the DIMM is released from the socket, grasp each end of the DIMM with your thumb and forefinger and pull the DIMM completely out of the socket. Handle the edges of the DIMM only; avoid touching the memory module or pins and the metal traces (the metal fingers along the connector edge of the DIMM) along the socket edge.
8. Place the DIMM in an antistatic bag to protect it from ESD damage.
9. Repeat Step 5 through Step 8 for the remaining DIMMs if required for your upgrade.

DETAILED STEPS

Step 1 With a wrist strap on, loosen the two captive screws on the faceplate of the Cisco ASR 1000 Series RP.

Step 2 Using the handles on both sides of the module, with two hands gently slide the module out of the chassis slot.

Step 3 Place the route processor on an antistatic mat or pad and ensure that you are wearing an antistatic device, such as a wrist strap.

Step 4 Position the route processor so that the faceplate is toward you and the edge connector is away from you.

Step 5 Locate the DIMMs on the ASR1000-RP2. See xref Figure 14-16, callout 2.

Step 6 For the DIMM you want to remove, pull down the lever on the DIMM socket to release the DIMM from the socket. See the following figure.

Figure 234: DIMM Socket Release Lever to Remove the DIMM

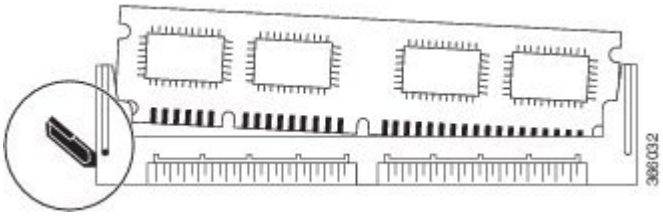

Step 7 When one end of the DIMM is released from the socket, grasp each end of the DIMM with your thumb and forefinger and pull the DIMM completely out of the socket. Handle the edges of the DIMM only; avoid touching the memory module or pins and the metal traces (the metal fingers along the connector edge of the DIMM) along the socket edge.

Step 8 Place the DIMM in an antistatic bag to protect it from ESD damage.

Step 9 Repeat Step 5 through Step 8 for the remaining DIMMs if required for your upgrade.

What to do next

This completes the steps for removing the Cisco ASR1000-RP2 DIMMs from the module.

Replacing the Cisco ASR1000-RP2 DIMMs

This section lists the steps to replace the Cisco ASR1000-RP2 DIMMs.

SUMMARY STEPS

1. Place the route processor on an antistatic mat or pad and ensure that you are wearing an antistatic device, such as a wrist strap.
2. Position the route processor so that the faceplate is toward you and the edge connector is away from you.
3. Remove the new DIMM from the antistatic bag.
4. Hold the DIMM component-side up, with the connector edge (the metal fingers) closest to you. Hold the ends of the DIMM between your thumb and forefinger. See the following figure.
5. Tilt the DIMM to approximately the same angle as the socket and insert the connector edge into the socket. Note the two notches (keys) on the connector edge of the DIMM. These keys are intended to ensure correct orientation of the DIMM in the socket.
6. Note the orientation of the socket key on the DIMM and the DIMM socket and gently push the DIMM into the socket until the lever is flush against the side of the DIMM socket, and the DIMM edge connector is fully inserted. If necessary, rock the DIMM gently back and forth to seat it properly. The following figure shows how to install the DIMM in the socket.
7. When the DIMM is installed, check that the release lever is flush against the side of the DIMM socket. If it is not, the DIMM might not be seated properly. If the DIMM appears misaligned, carefully remove it according to the removal procedure and then reseat it in the socket. Push the DIMM firmly back into the socket until the release lever is flush against the side of the DIMM socket.
8. Repeat Step 3 through Step 7 for the remaining DIMMs.
9. Replace the Cisco ASR1000-RP2.

DETAILED STEPS

Step 1 Place the route processor on an antistatic mat or pad and ensure that you are wearing an antistatic device, such as a wrist strap.

Step 2 Position the route processor so that the faceplate is toward you and the edge connector is away from you.

Caution DIMMs are sensitive components that can be shorted by mishandling; they are susceptible to ESD damage. Handle DIMMs by the edges only and avoid touching the pins.

Step 3 Remove the new DIMM from the antistatic bag.

Step 4 Hold the DIMM component-side up, with the connector edge (the metal fingers) closest to you. Hold the ends of the DIMM between your thumb and forefinger. See the following figure.

Figure 235: Handling the Cisco ASR1000-RP2 DIMM

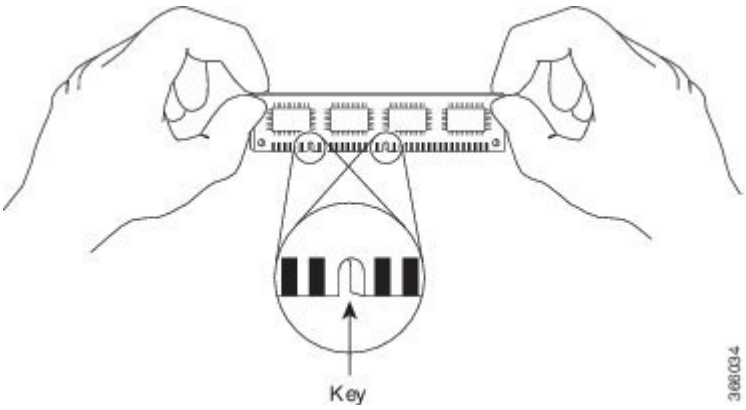

Step 5 Tilt the DIMM to approximately the same angle as the socket and insert the connector edge into the socket. Note the two notches (keys) on the connector edge of the DIMM. These keys are intended to ensure correct orientation of the DIMM in the socket.

Caution When inserting DIMMs, use firm but not excessive pressure. If you damage a socket, you will have to return the route processor to the factory for repair.

Step 6 Note the orientation of the socket key on the DIMM and the DIMM socket and gently push the DIMM into the socket until the lever is flush against the side of the DIMM socket, and the DIMM edge connector is fully inserted. If necessary, rock the DIMM gently back and forth to seat it properly. The following figure shows how to install the DIMM in the socket.

Figure 236: Installing the DIMM in the Socket

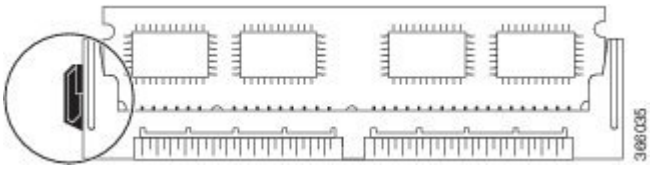

Step 7 When the DIMM is installed, check that the release lever is flush against the side of the DIMM socket. If it is not, the DIMM might not be seated properly. If the DIMM appears misaligned, carefully remove it according to the removal procedure and then reseat it in the socket. Push the DIMM firmly back into the socket until the release lever is flush against the side of the DIMM socket.

Step 8 Repeat Step 3 through Step 7 for the remaining DIMMs.

Step 9 Replace the Cisco ASR1000-RP2.

What to do next

This completes the procedure for replacing Cisco ASR1000-RP2 DIMMs.

After you have correctly installed the Cisco ASR1000-RP2 DIMMs and reinstalled the route processor, the system should reboot properly.

If the system fails to boot properly or if the console terminal displays a checksum or memory error after you have installed new DIMMs, check the following:

- Ensure that all DIMMs are installed correctly. If necessary, shut down the system and remove the route processor. Check the DIMMs by looking straight down on them to inspect them at eye level. The DIMMs should all be aligned at the same angle and the same height when properly installed. If a DIMM appears to stick out or rest in the socket at a different angle from the others, remove the DIMM and reinsert it. Then replace the route processor and reboot the system for another installation check.
- Make certain that all DIMMs are of the same manufacturer and part number.

Note If after several attempts the system fails to restart properly, contact a service representative for assistance. Before you call, make note of any error messages, unusual LED states, or any other indications that might help solve the problem.

Removing and Replacing the Cisco ASR 1001 Router DIMM Memory Modules

Perform the following steps before you begin:

- Use an ESD-preventive wrist strap.
- Back up data that you want to save.
- Remove the power supplies before you remove the chassis top cover.

Caution The top cover cannot be removed until the power supplies are removed from the chassis. The chassis has a safety mechanism built in to prevent the removal of the top cover until the power supplies are removed.

- The DIMM component is keyed and slotted for easier connection.
- The Cisco ASR 1001 Router has four DIMM slots.

Warning Do not install power supplies with the Cisco ASR 1001 chassis cover off.

The following table shows the slots that are supported for inserting memory DIMMs in the Cisco ASR1001 Router.

Table 94: Cisco ASR1001 Router Supported Slots for Inserting Memory DIMMs

Memory PID Option	Slot 0 (U101D)	Slot 1 (U103D)	Slot 2 (U100D)	Slot 3 (U102D)
M-ASR1K-1001-4GB	2 GB module	2 GB module	—	—
M-ASR1K-1001-8GB	2 GB Module	2 GB Module	2 GB Module	2 GB Module
M-ASR1K-1001-16GB	4 GB Module	4 GB Module	4 GB Module	4 GB Module

Note Ensure that the vendor and manufacturing part number (MPN) for all DIMMs are the same.

Note When upgrading memory from 4 GB to 8 GM, remove all existing memory DIMMS in the Cisco ASR 1001 Router, and then populate the DIMM Slots with the new 8 GB memory upgrade kit.

This section describes how to remove the chassis cover and then remove and replace the Cisco ASR 1001 Router DIMM. The following figure shows the location of the DIMM and eUSB in the Cisco ASR 1001 Router.

Figure 237: Cisco ASR 1001 Router Internal Component Location

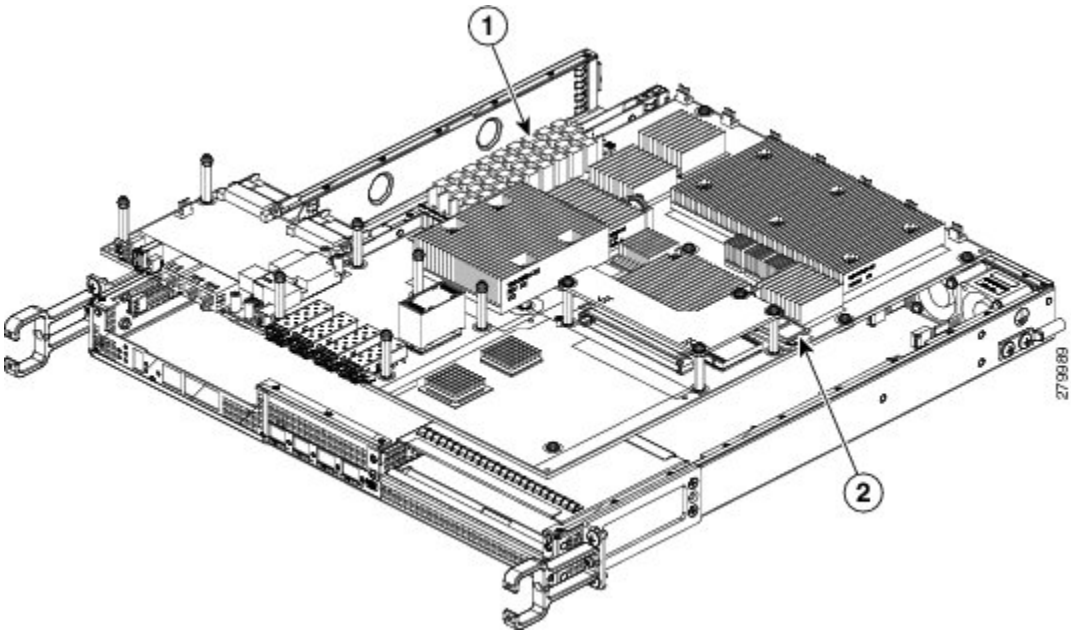

1	Cisco ASR 1001 Router DIMM location (four slots)	2	Cisco ASR 1001 Router eUSB location

Removing the Cisco ASR 1001 Router DIMMs

Follow these steps to remove the Cisco ASR 1001 Router DIMM:

SUMMARY STEPS

1. With a wrist strap on, remove the power supplies from the chassis.
2. After the power supplies are removed, remove the chassis top cover by performing the following steps:
3. Position the chassis so that you are facing the front of the chassis to remove the DIMM.
4. Locate the DIMM on the ASR 1001 Router. See Figure 14-20, callout 1.
5. Pull down the lever on the DIMM socket to release the corresponding DIMM from the socket. See the following figure.
6. When one end of the DIMM is released from the socket, grasp each end of the DIMM with your thumb and forefinger and pull the DIMM completely out of the socket. Handle only the edges of the DIMM; avoid touching the memory module, pins, and the metal traces (the metal fingers along the connector edge of the DIMM) along the socket edge.
7. Place the DIMM in an antistatic bag to protect it from ESD damage.

8. Repeat Step 8 through Step 10 for the remaining DIMMs if required for your upgrade.

DETAILED STEPS

Step 1 With a wrist strap on, remove the power supplies from the chassis.

Note The chassis cover cannot be removed until the power supplies are removed from the chassis.

For instructions about how to remove the AC and DC power supplies from the Cisco ASR 1001 Router, see:

xref Removing AC Power Supply from the Cisco ASR 1001 Router

xref Removing DC Input Power from the Cisco ASR 1001 Router

Step 2 After the power supplies are removed, remove the chassis top cover by performing the following steps:

a) Loosen all top surface screws on the chassis cover, as shown in the following figure, callout 3.

b) Loosen the three screws on the faceplate at the front of the chassis, as shown in the following figure, callout 6.

Figure 238: Removing the Cisco ASR 1001 Router Cover

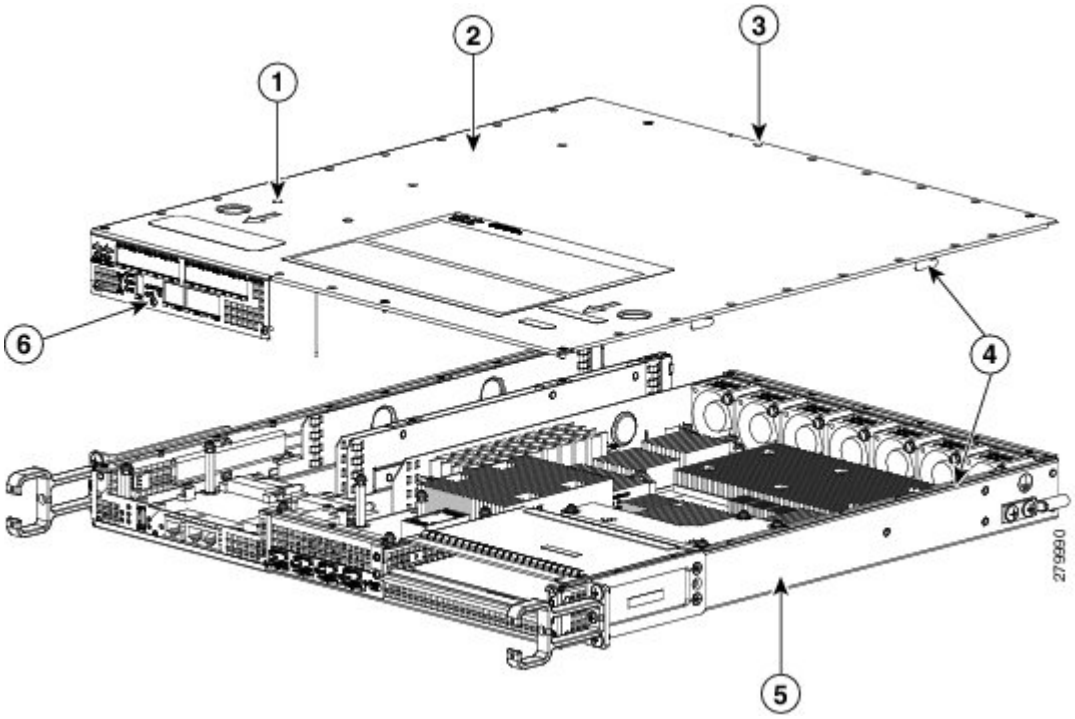

1	Interlock pin safety feature	4	Interlock hook feature on the chassis cover and base
2	Chassis cover	5	Chassis base
3	Top surface perimeter screws	6	Three screws at the front of the chassis faceplate

c) Using both hands, gently slide the cover forward and off of the chassis.

Note The cover will not come off the chassis if the power supplies are present in the chassis.

d) Place the cover aside while wearing an antistatic device, such as a wrist strap.

Step 3 Position the chassis so that you are facing the front of the chassis to remove the DIMM.

Step 4 Locate the DIMM on the ASR 1001 Router. See Figure 14-20, callout 1.

Step 5 Pull down the lever on the DIMM socket to release the corresponding DIMM from the socket. See the following figure.

Figure 239: DIMM Socket Release Lever to Remove the DIMM from the Cisco ASR 1001 Router

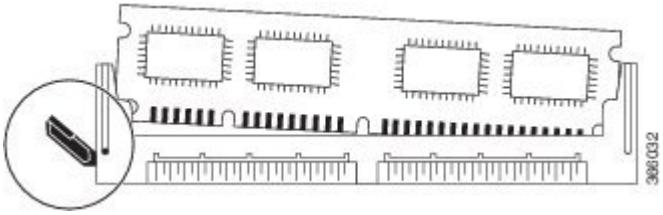

Step 6 When one end of the DIMM is released from the socket, grasp each end of the DIMM with your thumb and forefinger and pull the DIMM completely out of the socket. Handle only the edges of the DIMM; avoid touching the memory module, pins, and the metal traces (the metal fingers along the connector edge of the DIMM) along the socket edge.

Step 7 Place the DIMM in an antistatic bag to protect it from ESD damage.

Step 8 Repeat Step 8 through Step 10 for the remaining DIMMs if required for your upgrade.

What to do next

This completes the steps for removing the Cisco ASR 1001 Router DIMMs from the chassis.

Replacing the Cisco ASR 1001 Router DIMM

This section lists the steps to replace a DIMM into the Cisco ASR 1001 Router.

SUMMARY STEPS

1. Place the DIMM on an antistatic mat or pad while wearing an antistatic device, such as a wrist strap.
2. Remove the new DIMM from the antistatic bag.
3. Hold the DIMM component side up, with the connector edge (the metal fingers) closest to you. Hold the ends of the DIMM between your thumb and forefinger. See the following figure.
4. Tilt the DIMM to approximately the same angle as the socket and insert the connector edge into the socket. Note the two notches (keys) on the connector edge of the DIMM. These keys are intended to ensure correct orientation of the DIMM in the socket.
5. Note the orientation of the socket key on the DIMM and the DIMM socket, and gently push the DIMM into the socket until the lever is flush against the side of the DIMM socket, and the DIMM edge connector is fully inserted. If necessary, rock the DIMM gently back and forth to seat it properly. The following figure shows how to install the DIMM in the socket for the Cisco ASR 1001 Router.
6. After the DIMM is installed, check whether the release lever is flush against the side of the DIMM socket. If it is not, the DIMM might not be seated properly. If the DIMM appears misaligned, carefully remove it according to the removal procedure and then reseat it in the socket. Push the DIMM firmly back into the socket until the release lever is flush against the side of the DIMM socket.
7. Repeat Step 4 through Step 6 for the remaining DIMMs.
8. Replace the Cisco ASR 1001 Router top cover:

9. Install the power supplies into the chassis. See: xref Installing AC Input Power to Cisco ASR 1001 Router, xref Installing DC Input Power on the Cisco ASR 1001 Router

DETAILED STEPS

Step 1 Place the DIMM on an antistatic mat or pad while wearing an antistatic device, such as a wrist strap.

Caution DIMMs are sensitive components that can be shorted by mishandling; they are susceptible to ESD damage. Handle the DIMM by the edges only, and avoid touching the pins.

Step 2 Remove the new DIMM from the antistatic bag.

Step 3 Hold the DIMM component side up, with the connector edge (the metal fingers) closest to you. Hold the ends of the DIMM between your thumb and forefinger. See the following figure.

Figure 240: Handling the Cisco ASR 1001 Router DIMM

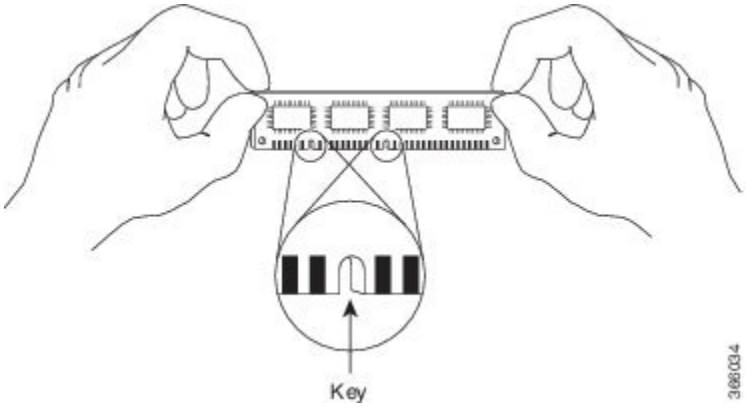

Step 4 Tilt the DIMM to approximately the same angle as the socket and insert the connector edge into the socket. Note the two notches (keys) on the connector edge of the DIMM. These keys are intended to ensure correct orientation of the DIMM in the socket.

Caution When inserting DIMMs, use firm but not excessive pressure. If you damage a socket, you will have to return the route processor to the factory for repair.

Step 5 Note the orientation of the socket key on the DIMM and the DIMM socket, and gently push the DIMM into the socket until the lever is flush against the side of the DIMM socket, and the DIMM edge connector is fully inserted. If necessary, rock the DIMM gently back and forth to seat it properly. The following figure shows how to install the DIMM in the socket for the Cisco ASR 1001 Router.

Figure 241: Installing the DIMM in the Socket for the Cisco ASR 1001 Router

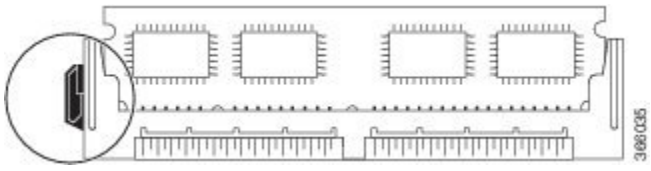

Step 6 After the DIMM is installed, check whether the release lever is flush against the side of the DIMM socket. If it is not, the DIMM might not be seated properly. If the DIMM appears misaligned, carefully remove it according to the removal

procedure and then reseat it in the socket. Push the DIMM firmly back into the socket until the release lever is flush against the side of the DIMM socket.

Step 7 Repeat Step 4 through Step 6 for the remaining DIMMs.

Step 8 Replace the Cisco ASR 1001 Router top cover:

a) Slide the cover onto the chassis ensuring that the interlock hook feature fits on the chassis cover and base, as shown in xref Figure 14-21, callout 4.

b) Tighten the top surface screws and then the three screws on the front faceplate.

Step 9 Install the power supplies into the chassis. See: xref Installing AC Input Power to Cisco ASR 1001 Router, xref Installing DC Input Power on the Cisco ASR 1001 Router

What to do next

This completes the procedure for replacing the Cisco ASR 1001 Router DIMMs.

After you have correctly installed the Cisco ASR 1001 Router DIMMs, the system should reboot properly.

If the system fails to reboot properly or if the console terminal displays a checksum or memory error after you have installed new DIMMs, check the following:

- Ensure that all the DIMMs are installed correctly. If necessary, shut down the system and remove the chassis cover. Check the DIMMs by looking straight down on them to inspect them at eye level. The DIMMs should all be aligned at the same angle and the same height when properly installed. If a DIMM appears to stick out or rest in the socket at a different angle from the others, remove the DIMM and reinsert it. Replace the top chassis cover, and reboot the system for another installation check.
- Ensure that all the DIMMs are from the same manufacturer and part number.



Note After several attempts, if the system fails to restart properly, contact a service representative for assistance. Before you call, make note of any error messages, unusual LED states, or other indications that might help solve the problem.

Removing and Replacing the Cisco ASR 1002-X Router DIMM Memory Modules

Perform the following steps before you begin:

- Use an ESD-preventive wrist strap.
- Back up data that you want to save before replacing a eUSB device.
- Note that the component is keyed and slotted for easier connection.
- To ensure that the DIMMs function correctly, all the DIMMs must be replaced at the same time. In addition, you must ensure that all the DIMMs are from the same manufacturer and have the same part number, because manufacturers may have multiple versions of a DIMM.

The following table shows the slots that are supported for inserting memory DIMMs in the Cisco ASR1002-X Router.

Table 95: Cisco ASR1002-X Router Supported Slots for Inserting Memory DIMMs

Memory PID Option	Slot 0 (U2D0)	Slot 1 (U2D1)	Slot 2 (U1D0)	Slot 3 (U1D1)
M-ASR1002X-4GB	2 GB module	—	2 GB module	—
M-ASR1002X-8GB	2 GB Module	2 GB Module	2 GB Module	2 GB Module
M-ASR1002X-16GB	4 GB Module	4 GB Module	4 GB Module	4 GB Module

Note To ensure vendor and MPN compatibility during memory upgrades, remove the installed DIMMs and replace them with the DIMMs provided in the upgrade kit.

This section describes how to remove and then replace the Cisco ASR 1002-X Router DIMMs (see xref Figure 14-16).

Figure 242: Cisco ASR1002-X Router Module Internal Component Location

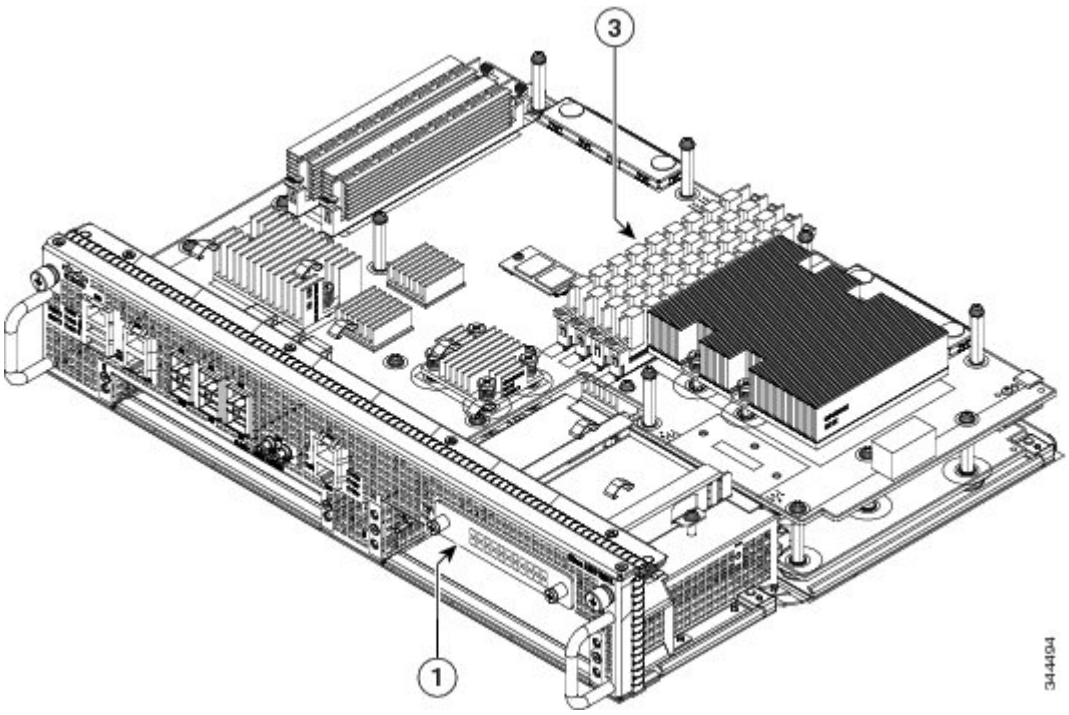

1	Internal hard drive location	3	Cisco ASR1002-X Router DIMM location

Removing the Cisco ASR1002-X Router DIMMs

Follow these steps to remove the Cisco ASR1002-X Router DIMMs:

SUMMARY STEPS

1. With a wrist strap on, loosen the two captive screws on the faceplate of the Cisco ASR 1002-X Router module.
2. Using the handles on both sides of the module, with two hands gently slide the module out of the chassis slot.
3. Place the module on an antistatic mat or pad and ensure that you are wearing an antistatic device, such as a wrist strap.
4. Position the module so that the faceplate is toward you and the edge connector is away from you.
5. Locate the DIMMs on the module. See xref Figure 14-16, callout 2.
6. For the DIMM you want to remove, pull down the lever on the DIMM socket to release the DIMM from the socket. See the following figure.
7. When one end of the DIMM is released from the socket, grasp each end of the DIMM with your thumb and forefinger and pull the DIMM completely out of the socket. Handle the edges of the DIMM only; avoid touching the memory module or pins and the metal traces (the metal fingers along the connector edge of the DIMM) along the socket edge.
8. Place the DIMM in an antistatic bag to protect it from ESD damage.
9. Repeat Step 5 through Step 8 for the remaining DIMMs if required for your upgrade.

DETAILED STEPS

Step 1 With a wrist strap on, loosen the two captive screws on the faceplate of the Cisco ASR 1002-X Router module.

Step 2 Using the handles on both sides of the module, with two hands gently slide the module out of the chassis slot.

Step 3 Place the module on an antistatic mat or pad and ensure that you are wearing an antistatic device, such as a wrist strap.

Step 4 Position the module so that the faceplate is toward you and the edge connector is away from you.

Step 5 Locate the DIMMs on the module. See xref Figure 14-16, callout 2.

Step 6 For the DIMM you want to remove, pull down the lever on the DIMM socket to release the DIMM from the socket. See the following figure.

Figure 243: DIMM Socket Release Lever to Remove the DIMM

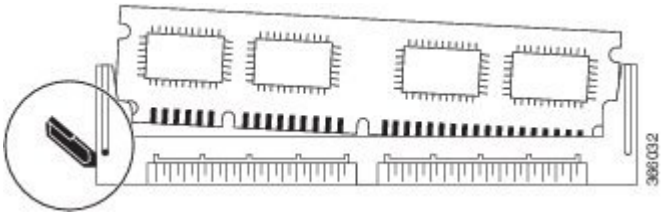

Step 7 When one end of the DIMM is released from the socket, grasp each end of the DIMM with your thumb and forefinger and pull the DIMM completely out of the socket. Handle the edges of the DIMM only; avoid touching the memory module or pins and the metal traces (the metal fingers along the connector edge of the DIMM) along the socket edge.

Step 8 Place the DIMM in an antistatic bag to protect it from ESD damage.

Step 9 Repeat Step 5 through Step 8 for the remaining DIMMs if required for your upgrade.

What to do next

This completes the steps for removing the Cisco ASR1002-X DIMMs from the module.

Replacing the Cisco ASR1002-X Router DIMMs

This section lists the steps to replace the Cisco ASR1002-X Router DIMMs.

SUMMARY STEPS

1. Place the module on an antistatic mat or pad and ensure that you are wearing an antistatic device, such as a wrist strap.
2. Position the module so that the faceplate is toward you and the edge connector is away from you.
3. Remove the new DIMM from the antistatic bag.
4. Hold the DIMM component-side up, with the connector edge (the metal fingers) closest to you. Hold the ends of the DIMM between your thumb and forefinger. See the following figure.
5. Align the DIMM with the socket, and insert the connector edge into the socket. Note the two notches (keys) on the connector edge of the DIMM. These keys are intended to ensure correct orientation of the DIMM in the socket.
6. Note the orientation of the socket key on the DIMM and the DIMM socket, and gently push the DIMM into the socket until the lever is flush against the side of the DIMM socket, and the DIMM edge connector is fully inserted. If necessary, rock the DIMM gently back and forth to seat it properly. The following figure shows how to install the DIMM in the socket.
7. When the DIMM is installed, check that the release lever is flush against the side of the DIMM socket. If it is not, the DIMM might not be seated properly. If the DIMM appears misaligned, carefully remove it according to the removal procedure and then reseat it in the socket. Push the DIMM firmly back into the socket until the release lever is flush against the side of the DIMM socket.
8. Repeat Step 3 through Step 7 for the remaining DIMMs.
9. Replace the module.

DETAILED STEPS

Step 1 Place the module on an antistatic mat or pad and ensure that you are wearing an antistatic device, such as a wrist strap.

Step 2 Position the module so that the faceplate is toward you and the edge connector is away from you.

Caution DIMMs are sensitive components that can be shorted by mishandling; they are susceptible to ESD damage. Handle DIMMs by the edges only and avoid touching the pins.

Step 3 Remove the new DIMM from the antistatic bag.

Step 4 Hold the DIMM component-side up, with the connector edge (the metal fingers) closest to you. Hold the ends of the DIMM between your thumb and forefinger. See the following figure.

Figure 244: Handling the Cisco ASR1000-RP2 DIMM

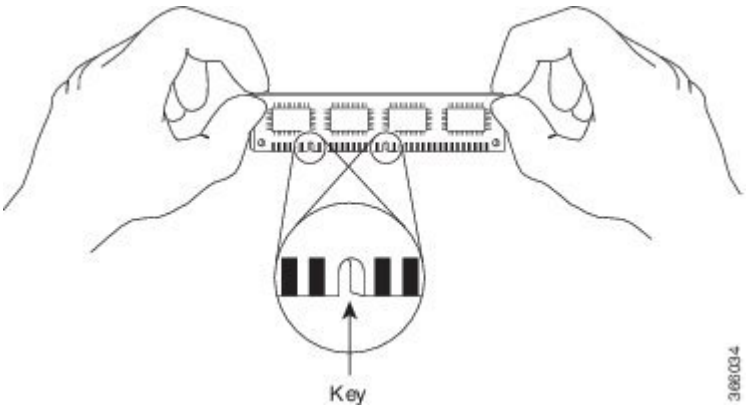

Step 5 Align the DIMM with the socket, and insert the connector edge into the socket. Note the two notches (keys) on the connector edge of the DIMM. These keys are intended to ensure correct orientation of the DIMM in the socket.

Caution When inserting DIMMs, use firm but not excessive pressure. If you damage a socket, you will have to return the module for repair.

Step 6 Note the orientation of the socket key on the DIMM and the DIMM socket, and gently push the DIMM into the socket until the lever is flush against the side of the DIMM socket, and the DIMM edge connector is fully inserted. If necessary, rock the DIMM gently back and forth to seat it properly. The following figure shows how to install the DIMM in the socket.

Figure 245: Installing the DIMM in the Socket

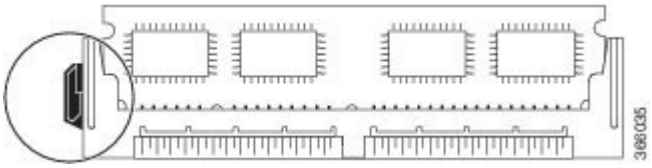

Step 7 When the DIMM is installed, check that the release lever is flush against the side of the DIMM socket. If it is not, the DIMM might not be seated properly. If the DIMM appears misaligned, carefully remove it according to the removal procedure and then reseat it in the socket. Push the DIMM firmly back into the socket until the release lever is flush against the side of the DIMM socket.

Step 8 Repeat Step 3 through Step 7 for the remaining DIMMs.

Step 9 Replace the module.

What to do next

This completes the procedure for replacing Cisco ASR1002-X Router DIMMs.

After you have correctly installed the DIMMs and reinstalled the route processor, the system should reboot correctly.

If the system fails to boot properly or if the console terminal displays a checksum or memory error after you have installed new DIMMs, ensure that all DIMMs are installed correctly. If necessary, shut down the system and remove the route processor. Check the DIMMs by looking straight down on them to inspect them at eye

level. The DIMMs should all be aligned at the same angle and the same height when properly installed. If a DIMM appears to stick out or rest in the socket at a different angle from the others, remove the DIMM and reinsert it. Then replace the route processor and reboot the system for another installation check.

Note If after several attempts the system fails to restart properly, contact a service representative for assistance. Before you call, make note of any error messages, unusual LED states, or any other indications that might help solve the problem.

Removing and Replacing Cisco ASR 1000 Router eUSB Devices

The Cisco ASR1000-RP1 and ASR1000-RP2 come with an embedded USB (eUSB) flash device that functions as the route processor Non-Volatile Random Access Memory (NVRAM) and boot disk of the route processor. The Cisco ASR1000-RP1 supports a 1 GB eUSB flash field-replaceable unit (FRU), and the Cisco ASR1000-RP2 supports a 2 GB eUSB on the Cisco ASR 1006 Router and the Cisco ASR 1004 Router.

The Cisco ASR 1001 Router has only one eUSB on the chassis. It is located at the eUSB connector P26, as shown in xref figure. To replace this component, you must remove a screw on the mounting hole.

Note The 8 GB eUSB on the integrated route processor is not an FRU on the Cisco ASR 1002 Router. The Cisco ASR1000-RP2 is not supported on the Cisco ASR 1002 Router and the Cisco ASR 1001 Router.

This section contains the following topics:

Remove and Replace the eUSB Device on the Cisco ASR 1006 and Cisco ASR 1004 Routers

To remove the Cisco ASR1000-RP eUSB from the Cisco ASR 1004 and Cisco ASR 1006 router, follow these steps:

SUMMARY STEPS

1. Before you physically replace the eUSB device, make a backup of startup-config and boot image to a storage device. For example, to backup to an external USB flash drive, enter:
2. To remove the Cisco ASR1000-RP and then the eUSB device from the chassis, follow these steps:

DETAILED STEPS

Step 1 Before you physically replace the eUSB device, make a backup of startup-config and boot image to a storage device. For example, to backup to an external USB flash drive, enter:

Example:

```
router# copy nvram:startup-config usb0
router# copy bootflash:asr1000rp1-adventerprisek9.02.01.00.122-33.XNA.bin usb0:
```

Step 2 To remove the Cisco ASR1000-RP and then the eUSB device from the chassis, follow these steps:

a) Attach an ESD-preventive wrist strap between you and an unpainted router surface.
b) If connected, remove any I/O cables from the Cisco ASR1000-RP.
c) Using a number two Phillips or a 3/16-inch flat-blade screwdriver, loosen the two captive screws on the faceplate of the Cisco ASR1000- RP.
d) Using the handles on both sides of the module, with two hands, gently slide the module out of the chassis slot.

Caution Handle the Cisco ASR1000-RP by the carrier edges only; never touch the printed circuit board components or connector pins.

e) Place the Cisco ASR1000-RP module on an antistatic surface with its printed circuit board components facing upward.
f) Locate the eUSB device on the ASR1000 Series RP board. The following figure shows the location of the eUSB component on the Cisco ASR1000-RP1 and xref figure shows the location of the eUSB component on the Cisco ASR1000-RP2 route processor.

Figure 246: Cisco ASR1000-RP1 eUSB Location

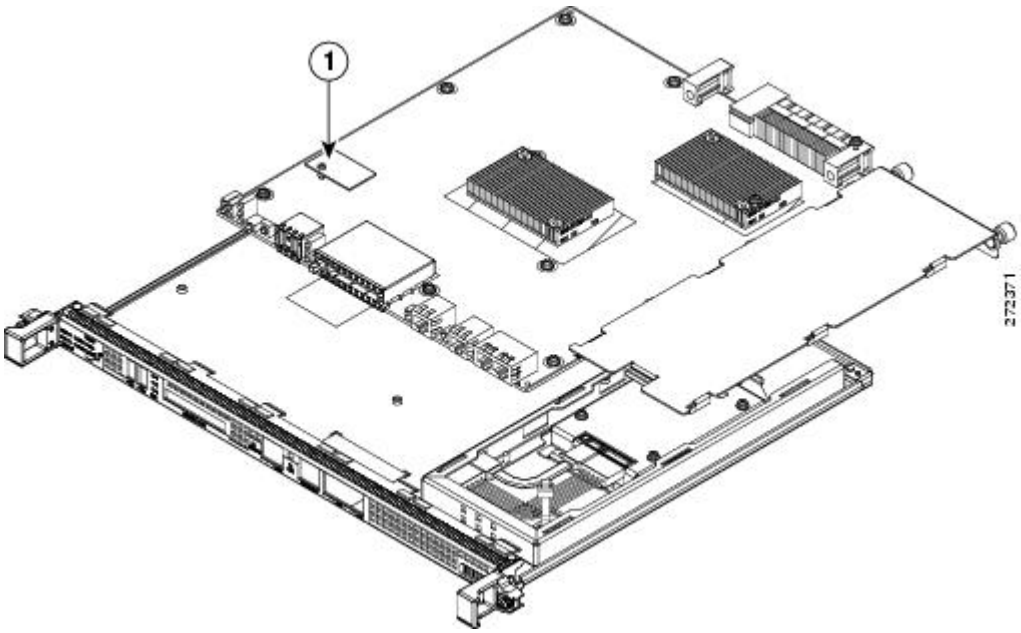

1	Cisco ASR 1000 Series RP1 eUSB device location	—	—

g) Remove the small Phillips screw holding the eUSB board in-place (see the following figure).

Figure 247: Cisco ASR1000-RP eUSB Device

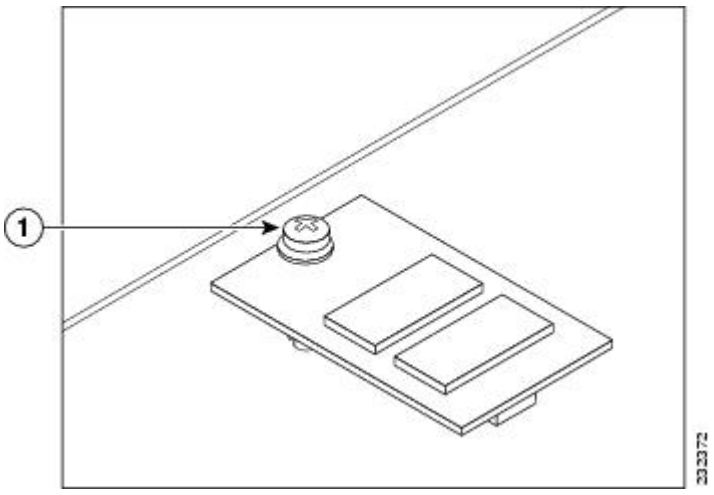

1	Cisco ASR 1000 Series RP eUSB device Phillips screw

h) Gently pull the eUSB device up from its connector and remove it.
i) Place the eUSB device in an antistatic bag for return.

What to do next

You have removed the Cisco ASR1000-RP and eUSB component.

Remove and Replace the eUSB Device on the Cisco ASR 1006 and Cisco ASR 1004 Routers

To replace the eUSB component, follow these steps:

SUMMARY STEPS

1. Align the replacement eUSB device over the connector and standoff. The device fits over the threaded post that sticks up off the board and accepts a screw to hold the eUSB firmly to the Cisco ASR 1000 Series RP board.
2. Gently insert the new eUSB device by pressing it into the connector keeping aligned with the standoff and secure the eUSB device with the small Phillips screw as displayed in the following figure.
3. Replace the Cisco ADR1000-RP into chassis and remove any external USB sticks.
4. Restore the backup copy of the startup-config and boot image to the eUSB device.
5. Verify that the Cisco ASR1000-RP1 is operating properly. Check that the internal hard drive LED (labeled as DISK HD) is flashing green. To check if the LED flashes green, from the ROMMON or IOS prompt, perform a:
6. To restore data after the internal hard drive replacement, type:

DETAILED STEPS

Step 1 Align the replacement eUSB device over the connector and standoff. The device fits over the threaded post that sticks up off the board and accepts a screw to hold the eUSB firmly to the Cisco ASR 1000 Series RP board.

Step 2 Gently insert the new eUSB device by pressing it into the connector keeping aligned with the standoff and secure the eUSB device with the small Phillips screw as displayed in the following figure.

Figure 248: Cisco ASR1000 Series RP eUSB Device Removal and Replacement

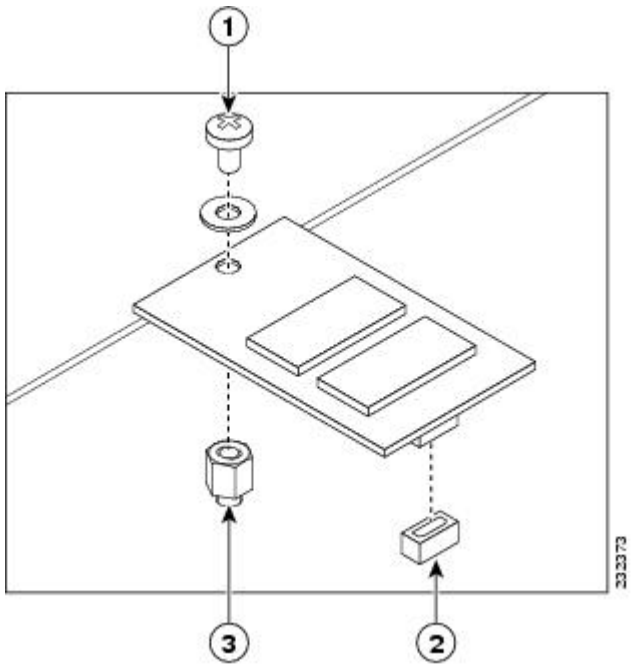

1	Phillips screw	3	Standoff
2	eUSB connector	—	—

Step 3 Replace the Cisco ADR1000-RP into chassis and remove any external USB sticks.

Note Once the new eUSB is installed and BinOS has successfully booted, this verifies that the new eUSB is functioning properly.

Step 4 Restore the backup copy of the startup-config and boot image to the eUSB device.

Example:

```
Router# copy nvram:startup-config stby-nvram:startup-config
Router# copy bootflash:asr1000rp1-adventerprisek9.02.01.00.122-33.XNA.bin stby-bootflash:
```

Step 5 Verify that the Cisco ASR1000-RP1 is operating properly. Check that the internal hard drive LED (labeled as DISK HD) is flashing green. To check if the LED flashes green, from the ROMMON or IOS prompt, perform a:

Example:

```
dir harddisk
```

Step 6 To restore data after the internal hard drive replacement, type:

Example:

```
archive tar/xtrac tftp:usb0:asr1000.tar harddisk:
```

What to do next

You have completed the replacement procedure for the eUSB device on a Cisco ASR1000-RP module.

Remove and Replace the eUSB Device on the Cisco ASR 1001 Router

To remove the Cisco ASR 1001 Router eUSB device, follow these steps:

SUMMARY STEPS

1. Before you physically replace the eUSB device, create a backup of the startup-config and the boot image. For example, to backup to an external USB flash drive, enter:
2. Remove the power supplies from the chassis before you remove the chassis cover. For instructions about how to remove the AC and DC power supplies from the Cisco ASR 1001 Router, see: xref sections.
3. After the power supplies are removed, remove the chassis top cover and follow theses steps:
4. Position the chassis so that you are facing the front.
5. Locate the eUSB device on the ASR 1001 chassis. See xref figure, callout number 2.
6. Remove the small Phillips screw holding the eUSB board in place. See the following figure.
7. Gently pull the eUSB device up from its connector, and remove it.
8. Place the eUSB device in an antistatic bag for return.

DETAILED STEPS

Step 1 Before you physically replace the eUSB device, create a backup of the startup-config and the boot image. For example, to backup to an external USB flash drive, enter:

Example:

```
router# copy nvram:startup-config usb0
router# copy bootflash:asr1000rp1-adventerprisek9.02.01.00.122-33.XNA.bin usb0:
```

Step 2 Remove the power supplies from the chassis before you remove the chassis cover. For instructions about how to remove the AC and DC power supplies from the Cisco ASR 1001 Router, see: xref sections.

Step 3 After the power supplies are removed, remove the chassis top cover and follow theses steps:

a) Loosen all top surface screws on the chassis cover, as shown in xref figure, callout number 3.
b) Loosen the three screws on the faceplate at the front of the chassis, as shown in xref figure, callout 6.
c) Using both hands, gently slide the cover forward and off of the chassis.

Note The cover will not come off the chassis if the power supplies are installed.

d) Place the cover aside and ensure that you are wearing an antistatic device, such as a wrist strap.

Step 4 Position the chassis so that you are facing the front.

Step 5 Locate the eUSB device on the ASR 1001 chassis. See xref figure, callout number 2.

Step 6 Remove the small Phillips screw holding the eUSB board in place. See the following figure.

Figure 249: Cisco ASR 1001 Router eUSB Device

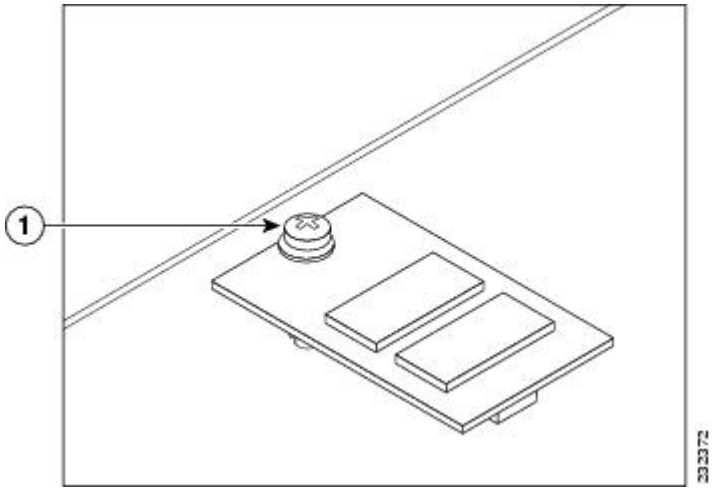

1	Cisco ASR 1001 router eUSB device Phillips screw

Step 7 Gently pull the eUSB device up from its connector, and remove it.

Step 8 Place the eUSB device in an antistatic bag for return.

What to do next

You have removed the eUSB device from the Cisco ASR 1001 Router.

Remove and Replace the eUSB Device on the Cisco ASR 1001 Router

To replace the eUSB component into the Cisco ASR 1001 Router, follow these steps:

SUMMARY STEPS

1. With the chassis cover removed, align the replacement eUSB device over the connector and standoff. The device fits over the threaded post that sticks up off the board and accepts a screw to hold the eUSB firmly to the Cisco ASR 1001 chassis base.
2. Gently insert the new eUSB device by pressing it into the connector while keeping the eUSB device aligned with the standoff. Secure the eUSB device with the small Phillips screw, as displayed in the following figure.
3. Replace the chassis cover and power supplies. To replace the Cisco ASR 1001 Router top cover:
4. Install the power supplies into the chassis. See: xref sections.
5. Restore the backup copy of the startup-config and the boot image to the eUSB device:
6. Verify that the Cisco ASR 1001 Router is operating properly. Check whether the internal hard drive LED (labeled as DISK HD) is flashing green. To check if the LED is flashing green, from the ROMMON or IOS prompt, run the following command:
7. To restore data after the internal hard drive replacement, run the following command:

DETAILED STEPS

Step 1 With the chassis cover removed, align the replacement eUSB device over the connector and standoff. The device fits over the threaded post that sticks up off the board and accepts a screw to hold the eUSB firmly to the Cisco ASR 1001 chassis base.

Step 2 Gently insert the new eUSB device by pressing it into the connector while keeping the eUSB device aligned with the standoff. Secure the eUSB device with the small Phillips screw, as displayed in the following figure.

Figure 250: Cisco ASR 1001 Router eUSB Device Removal and Replacement

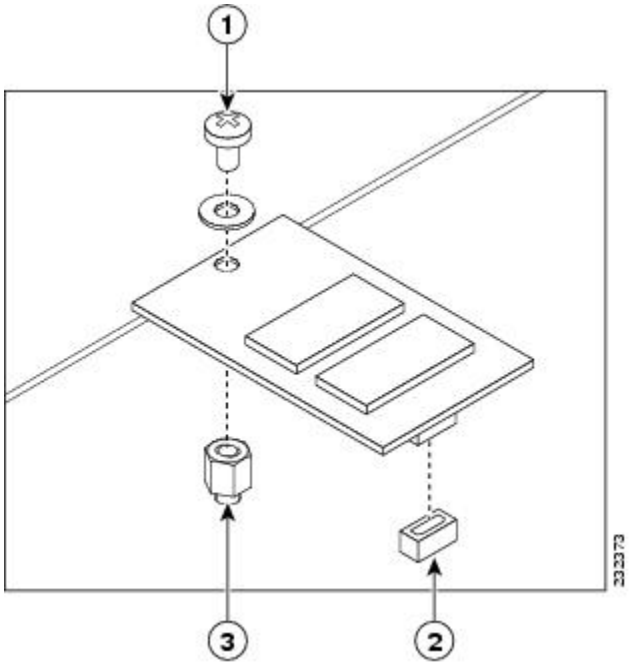

1	Phillips screw	3	Standoff
2	eUSB connector	—	—

Step 3 Replace the chassis cover and power supplies. To replace the Cisco ASR 1001 Router top cover:

a) Slide the cover onto the chassis while ensuring that the interlock hook feature is fitted on the chassis cover and base, as shown in xref fig, callout 4.

b) Tighten the top surface screws and then the three screws on the front faceplate.

Step 4 Install the power supplies into the chassis. See: xref sections.

Note After the new eUSB is installed and BinOS has been successfully booted, it is verified that the new eUSB is functioning properly.

Step 5 Restore the backup copy of the startup-config and the boot image to the eUSB device:

Example:

```
Router# copy nvram:startup-config stby-nvram:startup-config
Router# copy bootflash:asr1000rp1-adventerprisek9.02.01.00.122-33.XNA.bin stby-bootflash:
```

Step 6 Verify that the Cisco ASR 1001 Router is operating properly. Check whether the internal hard drive LED (labeled as DISK HD) is flashing green. To check if the LED is flashing green, from the ROMMON or IOS prompt, run the following command:

Example:

```
dir harddisk
```

Step 7 To restore data after the internal hard drive replacement, run the following command:

Example:

```
archive tar/xtrac tftp:usb0:asr1000.tar harddisk:
```

What to do next

You have completed the replacement procedure for the eUSB device in the Cisco ASR 1001 Router.

Removing and Replacing Cisco ASR 1000 Series Router 1 GB USB Flash Token Memory Stick

The Cisco ASR1000-RPs contain ports for a 1 GB flash token memory stick to store configurations or Cisco IOS XE consolidated packages.

The following figure shows the USB port 0 or 1 connector on the Cisco ASR 1000 Series route processor for the 1 GB flash token memory stick.

Figure 251: Cisco ASR 1000 Series Route Processor 1 Token Memory Stick Port

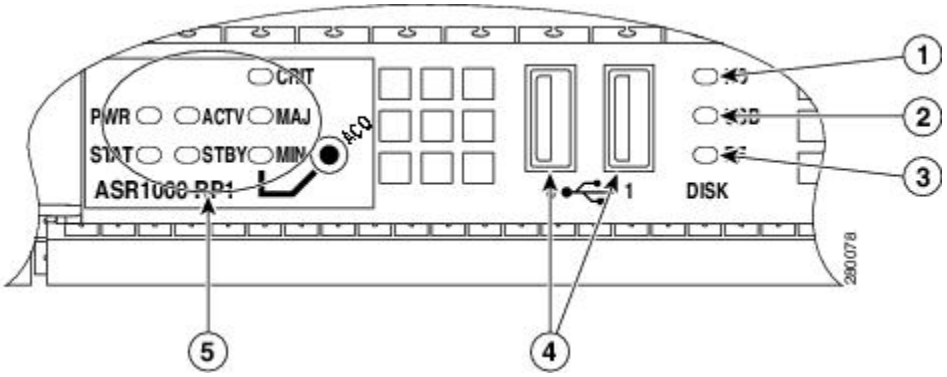

1	**Internal hard drive LED**	**4**	**USB0 and USB1 connectors**
2	External USB Flash LED	5	Cisco ASR 1000 Series RP LEDs
3	Internal USB bootflash LED	—	—

Caution Do not remove a USB Flash memory module when issuing some file access command or a read/write operation to the Flash memory module when it is processing. The router might reload or the USB Flash memory module can be damaged. You can check to see if the USB activity LED on the Cisco ASR1000-RP front panel is flashing, prior to the removal of the USB device

To remove and then replace a USB 1 GB flash token memory stick from a Cisco ASR1000-RP, follow these steps:

SUMMARY STEPS

1. Pull the memory stick from the USB port.
2. To replace a Cisco USB Flash memory stick, simply insert the module into the USB port 0 or 1 port as shown in the following figure. The Flash memory module can be inserted only in one way, and can be inserted or removed regardless of whether the router is powered up or not.

DETAILED STEPS

Step 1 Pull the memory stick from the USB port.

Note The Cisco ASR 1002 Router has only one USB port.

Step 2 To replace a Cisco USB Flash memory stick, simply insert the module into the USB port 0 or 1 port as shown in the following figure. The Flash memory module can be inserted only in one way, and can be inserted or removed regardless of whether the router is powered up or not.

Note The following figure is only a sample of how the memory stick is inserted into the port and does not display the Cisco ASR 1000 Series RP faceplate.

Figure 252: Cisco ASR 1000 Series Route Processor 1 Flash Token Memory Stick

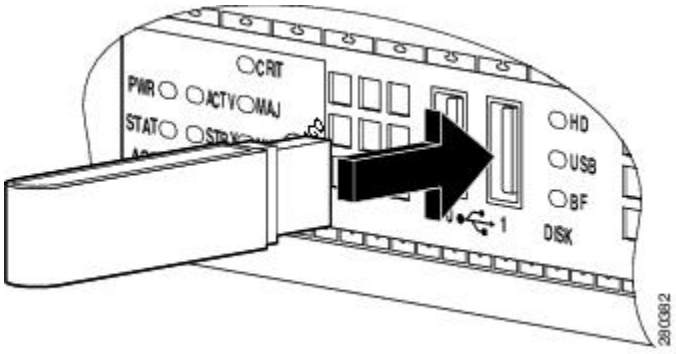

Note You can insert or remove the memory stick whether the router is powered on or not.

What to do next

This completes the USB Flash memory installation procedure.

Minimum Requirements of eUSB Devices Supported on Cisco ASR 1000 Series Routers

This section provides details regarding addition of an output message, indicating whether the eUSB device currently used on the Route Processor (RP) is correct or the eUSB device is of less capacity and is incompatible with the RP. This additional message has been introduced for the ASR 1000 Chassis Types (2,4,6,13RU) in Cisco IOS XE Release 2.3.0S. Additionally, this change specifically for Cisco ASR 1001 Router Chassis has been introduced in the Cisco IOS XE Release 2.4.0S.

Previous Behavior

Some of the Cisco ASR 1000 Series Routers were shipped with low-capacity eUSB devices on the Route-processor boards. It is not an easy way to detect the presence of an invalid eUSB device with low capacity on the RP. As the RP boards has already been shipped, it is important to provide information about the presence of an incorrect eUSB device or a eUSB device with less capacity. Earlier, an additional informational message was not displayed even if the eUSB device was of less capacity for the RP used on the system.

Corrective Action Required

If the eUSB device is of less capacity and is not compatible as indicated in the Cisco IOS message then you need to contact Cisco System Inc. and get the eUSB replaced. Prolonged use of routers with less capacity eUSB devices would result in unpredictable behavior.

New Behavior

From Cisco IOS XE Release 2.3.0 onwards, an additional message is displayed on the auxiliary port and on the Cisco IOS console port, providing information whether the eUSB device currently used is correct. For Cisco ASR 1001 Router, this change for eUSB compatibility has been implemented from Cisco IOS XE Release 2.4.0S onwards. The recommended eUSB devices with the minimum memory capacity for the RP types compatible are:

Table 96: Matrix for eUSB Memory Capacity Support and Route Processor on ASR 1000 Routers

Router Type	eUSB Capacity (Gigabytes)
1RU-RP	8
2RU-RP	8
4RU-RP1	1
6RU-RP1	1
13RI-RP1	1 (subject to change)
4RU-RP2	2
6RU-RP2	2

Router Type	eUSB Capacity (Gigabytes)
13RU-RP2	2

When the system is started, Cisco IOS Software detects the capacity of the eUSB device currently used on the system. If the eUSB device matches the minimum value of the eUSB capacity as specified above then no messages are displayed at the Cisco IOS console.

However, an informational message is displayed at the auxiliary port. For example, on a 6RU system, at the auxiliary port, the following message appears if the eUSB is valid:

....

```
Checking eUSB capacity information for 6RU:ASR1000-RP1 ... 1003520 KBytes [ OK ]
..
```

However, when an invalid eUSB device is found, the following messages are displayed at the Cisco IOS Console:

```
...
    %IOSXEBOOT-4-EUSB_PROVISIONING: (rp/0): Unsupported low capacity eUSB detected in 2RU
board
...
```

The following message is displayed at the auxiliary port:

```
...
    Checking eUSB capacity information for 2RU:ASR1000-RP-2RU ...
  The capacity of the installed eUSB device is insufficient.
  It is 1003520 KBytes. The recommended capacity is 8 GByte(s).
 %IOSXEBOOT-4-EUSB_PROVISIONING: (rp/0): Unsupported low capacity eUSB detected in 2RU board
...
```



Note Even though this message is displayed, the system is permitted to proceed through it's bring up and should start functioning properly initially. The router should perform normally until the free resource available in the eUSB device drops to an unacceptably low level. That low threshold is non-deterministic and hence the invalid eUSB device should be replaced at the earliest opportunity. System behavior is unpredictable when the eUSB resources are running low.

Removing and Replacing Cisco ASR 1000 Series Embedded Service Processors

The following sections describe the procedures for replacing the Cisco ASR 1000 Series embedded service processors in your system. The module also contains card handles to assist in insertion and removal of the module and retention of the module into the chassis. The Cisco ASR 1000 Series embedded services processors have no front panel I/O connectors.

Note See xref Table 1-2 for information about the embedded services processors that are supported on the various Cisco ASR 1000 Aggregation Services Routers. On some routers, the embedded services processor is an integral part of the router. On these routers, you cannot remove the embedded services processor. For example, Cisco ASR1002-ESP-F is integrated on the chassis of Cisco ASR 1002-F Router.

This section contains the following topics:

Note Before you begin the procedure, verify that your system meets the minimum requirements as described in xref Chapter 2, "Cisco ASR 1000 Series Routers Component Overview."

Important Notes about Cisco ASR1000-ESP Upgrades

You can upgrade from an earlier release of an embedded services processor to a later release. For example, a router can be upgraded from Cisco ASR1000-ESP10 to Cisco ASR1000-ESP20 or from Cisco ASR1000-ESP20 to Cisco ASR1000-ESP40.

The following sample procedure describes an upgrade from Cisco ASR1000-ESP20 to Cisco ASR1000-ESP40 on Cisco ASR 1006 Router:

Step 1 Ensure that Cisco ASR 1006 Router has Cisco ASR1000-ESP20 in the F0 slot in the Active state.

Step 2 Insert Cisco ASR1000-ESP40 in the F1 slot. The Cisco ASR1000-ESP40 comes up as the standby.

Step 3 Reload Cisco ASR1000-ESP20. The ASR1000-ESP40 becomes active, the Cisco ASR1000-ESP20 is disabled, and an error message is displayed.

Note If there are two different versions of the Cisco ASR1000-ESP in a router when you reload, the F0 slot always comes up as Active and the F1 slot comes up as Standby or Disabled, depending on whether the F1 slot has a later version of the Cisco ASR1000-ESP or an earlier one. A downgrade from a later version ESP to an earlier version is not supported and that is the reason the Cisco ASR1000-ESP20 is disabled in this step. To downgrade back to a Cisco ASR1000-ESP20, you must remove the Cisco ASR1000-ESP40 and reload the router. Similarly, to downgrade back to a Cisco ASR1000-ESP10 from a Cisco ASR1000-ESP20, you must remove the Cisco ASR1000-ESP20 and reload the router.

Removing a Cisco ASR1000-ESP

To remove the Cisco ASR1000 ESP from the Cisco ASR 1000 Series Routers, follow this procedure:

SUMMARY STEPS

1. Slip on the ESD-preventive wrist strap that was included in the accessory kit. Loosen the captive screws on the Cisco ASR 1000 Series Embedded Services Processor.
2. Using the handles on both sides of the module, with two hands gently slide the Cisco ASR 1000 Series Embedded Services Processor out of the chassis slot.

3. Place the Cisco ASR1000 ESP module on an antistatic surface with its printed circuit board components facing upward or in a static shielding bag.

DETAILED STEPS

Step 1 Slip on the ESD-preventive wrist strap that was included in the accessory kit. Loosen the captive screws on the Cisco ASR 1000 Series Embedded Services Processor.

Step 2 Using the handles on both sides of the module, with two hands gently slide the Cisco ASR 1000 Series Embedded Services Processor out of the chassis slot.

Note Handle the ESP by the carrier edges only; never touch the printed circuit board components or connector pins.

Step 3 Place the Cisco ASR1000 ESP module on an antistatic surface with its printed circuit board components facing upward or in a static shielding bag.

What to do next

You have completed the removal procedure for the Cisco ASR 1000 Series Embedded Services Processor.

Replacing the Cisco ASR1000 ESP

To replace the Cisco ASR 1000 Series Embedded Services Processor in the Cisco ASR 1000 Series Router, follow this procedure:

SUMMARY STEPS

1. Attach an ESD-preventive wrist strap between you and an unfinished chassis surface.
2. Remove the new ESP from its static shielding bag.
3. Using both hands, grasp the ESP by its metal carrier edges and orient the it so that its printed circuit board components are upward.
4. Align the left and right edges of the ESP printed circuit board between the Cisco ASR1000-ESP slot guides.
5. Gently slide the ESP all the way into its chassis slot until you feel the connectors seat with the router midplane.
6. Seat the ESP in the router midplane by tightening its captive installation screws with a number 2 Phillips or a 3/16-inch flat-blade screwdriver.

DETAILED STEPS

Step 1 Attach an ESD-preventive wrist strap between you and an unfinished chassis surface.

Step 2 Remove the new ESP from its static shielding bag.

Step 3 Using both hands, grasp the ESP by its metal carrier edges and orient the it so that its printed circuit board components are upward.

Caution Handle the ESP by the carrier edges and handle only; never touch the printed circuit board components or connector pins.

Step 4 Align the left and right edges of the ESP printed circuit board between the Cisco ASR1000-ESP slot guides.

Step 5 Gently slide the ESP all the way into its chassis slot until you feel the connectors seat with the router midplane.

Step 6 Seat the ESP in the router midplane by tightening its captive installation screws with a number 2 Phillips or a 3/16-inch flat-blade screwdriver.

What to do next

This completes the procedure for replacing the ESP in the Cisco ASR 1000 Series Router.

Removing and Replacing Cisco ASR 1000 Series Router SPAs and SPA Interface Processors

This section contains the following topics:

Note For detailed information about SIP and SPA software commands such as activating and deactivating SIPs, prepare for online insertion and removal of SPAs, and activate and deactivate configuration examples, see Cisco ASR 1000 Series Aggregation Services Routers SIP and SPA Hardware Installation Guide .

Note The embedded shared port adapter interface processor (SIP) on the Cisco ASR 1002 Router and Cisco ASR 1002-F Router do not support online insertion and removal. However, the SPAs on the Cisco embedded services processors do support online insertion and removal.

Caution When removing or replacing SPAs, make certain that all the screw fasteners on each card and each SIP are screwed in tightly to prevent accidental removal of another card. Each SIP has two screw fasteners per slot and each SPA has two screw fasteners.

We suggest you have the following tools and parts readily available for installation of the SIPs and SPAs:

- Number 2 Phillips or a 3/16-inch flat-blade screwdriver
- Shared port adapter interface processor (SIP)
- Shared port adapters (SPAs)
- Cables
- Your own ESD-prevention equipment or the disposable grounding wrist strap included with all upgrade kits, field-replaceable units (FRUs), and spares
- Antistatic mat or surface, or static shielding bag

If you need additional equipment, contact a service representative for ordering information.

Electrostatic Discharge Prevention

Electrostatic discharge (ESD) damages equipment and impairs electrical circuitry. ESD occurs when printed circuit boards are improperly handled and results in complete or intermittent failures.

Each SPA circuit board is mounted to a metal carrier and is sensitive to electrostatic discharge (ESD) damage. The SIP and SPAs consist of a printed circuit board that is fixed in a metal carrier. Electromagnetic interference (EMI) shielding, connectors, and a handle are integral components of the carrier.

When a subslot is not in use, a SPA blank filler plate must fill the empty subslot to allow the router to conform to electromagnetic interference (EMI) emissions requirements and to allow proper airflow across the installed modules. If you plan to install a SPA in a subslot that is not in use, you must first remove the SPA blank filler plate.

⚠

Caution Always handle the SIP by the carrier edges and its handle; never touch the SIP components or connector pins.

Figure 253: Handling the Cisco ASR 1000 Series SPA Interface Processor

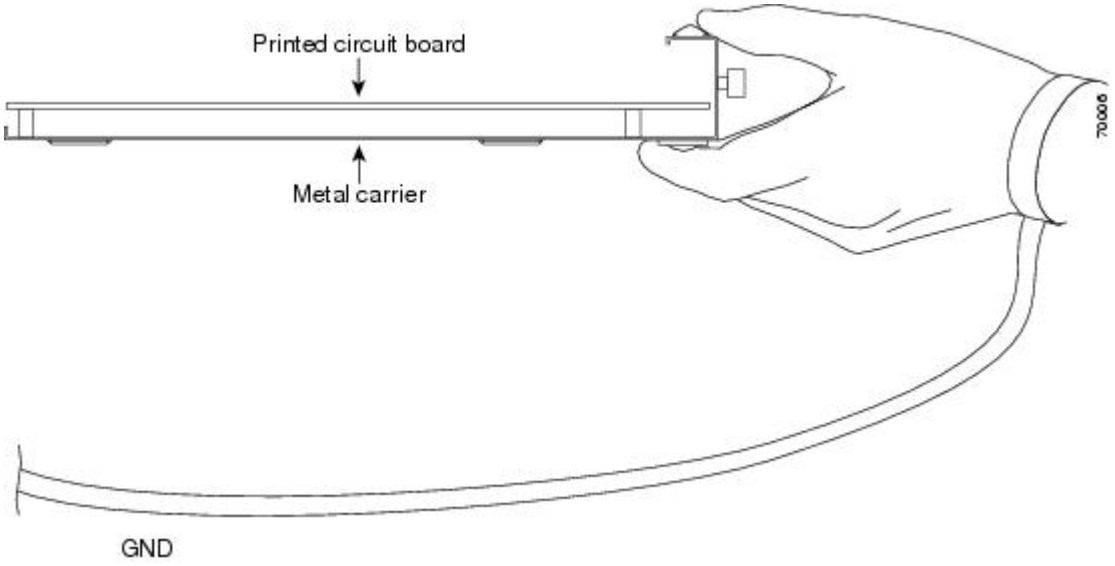

Add a callout table.

1 - Printed circuit board

2 - Metal carrier

Although the metal carrier helps to protect the SIP and SPA from ESD, wear a preventive antistatic strap whenever handling the SIP and SPA. Ensure that the strap makes good skin contact and connect the strap's clip to an unpainted chassis surface to safely channel unwanted ESD voltages to ground.

If no wrist strap is available, ground yourself by touching the metal part of the chassis.

Following are guidelines for preventing ESD damage:

- Always use an ESD wrist strap or ankle strap when installing or replacing the Cisco ASR 1000 Series SPA Interface (SIP) and shared port adapter. Ensure that the ESD strap makes contact with your skin.

- Handle the Cisco ASR 1000 Series SPA Interface (SIP) or shared port adapter by its metal carrier edges and handles; avoid touching the printed circuit board or any connector pins.
- When removing an Cisco ASR 1000 Series SPA Interface (SIP) or shared port adapter, place it on an antistatic surface with the printed circuit board components facing upward, or in a static shielding bag. If you are returning a shared port adapter or Cisco ASR 1000 Series SPA Interface (SIP) to the factory, immediately place it in a static shielding bag.

Removing the Cisco ASR 1000 SPA Interface Processor

To remove a SPA Interface Processor (SIP) in the Cisco ASR 1006 Router and Cisco ASR 1004 Router, follow these steps.

SUMMARY STEPS

1. Slip on the ESD-preventive wrist strap that was included in the accessory kit. Loosen the captive screws on the Cisco ASR 1000 Series SPA Interface Processor.
2. Using the handles on both sides of the module, with two hands gently slide the Cisco ASR 1000 Series SPA Interface Processor out of the chassis slot.
3. Place the Cisco ASR1000-SIP10 on an antistatic surface with its printed circuit board components facing upward or in a static shielding bag.

DETAILED STEPS

Step 1 Slip on the ESD-preventive wrist strap that was included in the accessory kit. Loosen the captive screws on the Cisco ASR 1000 Series SPA Interface Processor.

Step 2 Using the handles on both sides of the module, with two hands gently slide the Cisco ASR 1000 Series SPA Interface Processor out of the chassis slot.

Note Handle the Cisco ASR1000-SIP10 by the card edges only; never touch the printed circuit board components or connector pins.

Step 3 Place the Cisco ASR1000-SIP10 on an antistatic surface with its printed circuit board components facing upward or in a static shielding bag.

For detailed information about installing and removing SIPs and SPAs, see Cisco ASR 1000 Series Aggregation Services Routers SIP and SPA Hardware Installation Guide .

What to do next

You have completed the removal procedure for the Cisco ASR1000-SIP10.

Replacing the Cisco ASR 1000 SPA Interface Processor

To replace a SPA Interface Processor (SIP), follow these steps.

SUMMARY STEPS

1. Before inserting a SIP, make sure that the chassis is grounded.

2. To insert the SIP, carefully align the edges of the SIP between the upper and lower edges of the router slot.
3. Carefully slide the SIP into the router slot until the SIP makes contact with the backplane.
4. Tighten the locking thumbscrews on both sides of the SIP.
5. Connect all cables to each SPA.

DETAILED STEPS

Step 1 Before inserting a SIP, make sure that the chassis is grounded.

Step 2 To insert the SIP, carefully align the edges of the SIP between the upper and lower edges of the router slot.

Step 3 Carefully slide the SIP into the router slot until the SIP makes contact with the backplane.

Step 4 Tighten the locking thumbscrews on both sides of the SIP.

Step 5 Connect all cables to each SPA.

Removing a Shared Port Adapter from a SIP

To remove a shared port adapter (SPA), follow these steps.

SUMMARY STEPS

1. Attach an ESD wrist strap between you and an unpainted chassis surface.
2. Shut down the interface so that there is no traffic running through the shared port adapter when it is removed.
3. Disconnect all cables from the shared port adapter.
4. Unscrew the captive installation screws on either side of the SPA.
5. Grasp the handles and pull the SPA from the SIP.

DETAILED STEPS

Step 1 Attach an ESD wrist strap between you and an unpainted chassis surface.

Step 2 Shut down the interface so that there is no traffic running through the shared port adapter when it is removed.

Caution Removing a shared port adapter while traffic is flowing through the ports can cause system disruption.

Refer to the following example to shut down the interface FastEthernet0/1/0 on the 8-Port Fast Ethernet Shared Port Adapter (SPA-8X1FE-TX-V2).

a) At the router# prompt, type:**configure terminal** and press Enter. The global configuration mode prompt Router (config)# appears.
b) At the router (config)# prompt, type:**interface FastEthernet0/1/0** and press Enter. The interface configuration mode prompt Router(config-if)# appears.
c) At the router (config-if)# prompt, type:**shutdown** and press Enter. This disables the interface FastEthernet0/1/0.
d) At the router(config-if)# prompt, type:**end** and press Enter. The privileged EXEC mode prompt Router# appears.

Step 3 Disconnect all cables from the shared port adapter.

Step 4 Unscrew the captive installation screws on either side of the SPA.

Step 5 Grasp the handles and pull the SPA from the SIP.

What to do next

You have completed the removal procedure for the Cisco ASR 1000 Series SPA.

Replacing a Shared Port Adapter in a SIP

To replace a shared port adapter in a SIP module, follow these steps:

SUMMARY STEPS

1. To insert the SPA in the SIP, locate the guide rails inside the SIP that hold the SPA in place. They are at the top left and top right of the SPA slot and are recessed about an inch.
2. Carefully slide the SPA all the way in the SIP until the SPA is firmly seated in the SPA interface connector. When fully seated, the SPA might be slightly behind the SIP faceplate.
3. After the SPA is properly seated, fasten the SPA in place with the captive installation screws on either side of the SPA.

DETAILED STEPS

Step 1 To insert the SPA in the SIP, locate the guide rails inside the SIP that hold the SPA in place. They are at the top left and top right of the SPA slot and are recessed about an inch.

Step 2 Carefully slide the SPA all the way in the SIP until the SPA is firmly seated in the SPA interface connector. When fully seated, the SPA might be slightly behind the SIP faceplate.

Step 3 After the SPA is properly seated, fasten the SPA in place with the captive installation screws on either side of the SPA.

Removing and Replacing the Cisco ASR 1006 Router Power Supplies

The Cisco ASR 1006 Router contains power supplies that are field replaceable units. This section contains the following topics:

Removing and Replacing a AC Power Supply in Cisco ASR 1006 Router

This section provides information about removing and replacing an AC power supply in the Cisco ASR 1006 Router.

Removing the AC Power Supply from Cisco ASR 1006 Router

Because of the power supply redundancy, there is no need to power off the Cisco ASR 1006 Router before removing one of the AC power supplies.

The Cisco ASR 1006 Router has two of the same type power supplies in power supply slot 0 and power supply slot 1.

To remove the Cisco ASR 1006 Router AC power supply that is not operating normally (and then replace the AC power supply within five minutes), follow this procedure:

SUMMARY STEPS

1. Slip on the ESD-preventive wrist strap that was included in the accessory kit.
2. Before you turn off a power supply, make certain the chassis is grounded.
3. Turn the power supply Standby switch to the Standby position.
4. Unplug the power cable from the AC inlet on the back of the power supply and the power source.
5. Unscrew the power supply captive screws.
6. Grasping the power supply handles, pull the power supply from the chassis.
7. Replace the AC power supply within five minutes.

DETAILED STEPS

Step 1 Slip on the ESD-preventive wrist strap that was included in the accessory kit.

Step 2 Before you turn off a power supply, make certain the chassis is grounded.

Step 3 Turn the power supply Standby switch to the Standby position.

The following figure shows the power inlet and standby switch for the ASR1006-PWR-DC power supply. On the ASR1013/06-PWR-DC power supply, the AC power inlet and standby switch are at relatively the same positions.

Figure 254: AC Power Inlet and Standby Switch

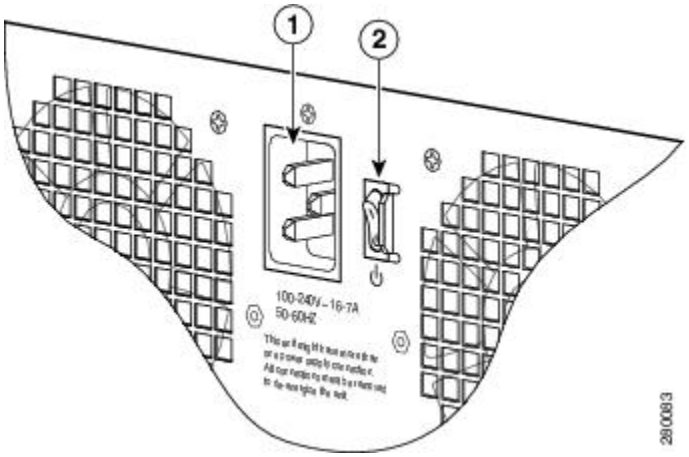

1	Power inlet	2	Power supply AC standby switch

Step 4 Unplug the power cable from the AC inlet on the back of the power supply and the power source.

Step 5 Unscrew the power supply captive screws.

Note Two power supplies must be installed in the chassis at all times, with a minimum of one power supply connected to the mains in order to power on the system and ensure sufficient cooling. The system fans are inside the power supply units and must spin for cooling. Because all the system fans can be powered by one power supply, the second power supply unit does not have to be powered on, but must be connected.

Caution If you remove a power supply from a system that has four power supplies that are connected and powered on, the system can run only for a maximum of five minutes before shutting down. However, because the fans and power elements are independent within the power supply, the replacement power supply does not have to be energized within five minutes. The only requirement is that the power supply be installed in the chassis in order to energize the fans and maintain proper system cooling.

Step 6 Grasping the power supply handles, pull the power supply from the chassis.

Step 7 Replace the AC power supply within five minutes.

What to do next

This completes the procedure for removing the AC power supply from the Cisco ASR 1006 chassis.

Replacing the AC Power Supply in Cisco ASR 1006 Router

This section provides information about installing an AC power supply in the Cisco ASR 1006 Router.

Warning Never install an AC power module and a DC power module in the same chassis. Statement 1050

The following figure shows the ASR1006-PWR-AC power supply of the Cisco ASR 1006 Router.

Figure 255: Cisco ASR 1006 Router AC Power Supply (ASR1006-PWR-AC)

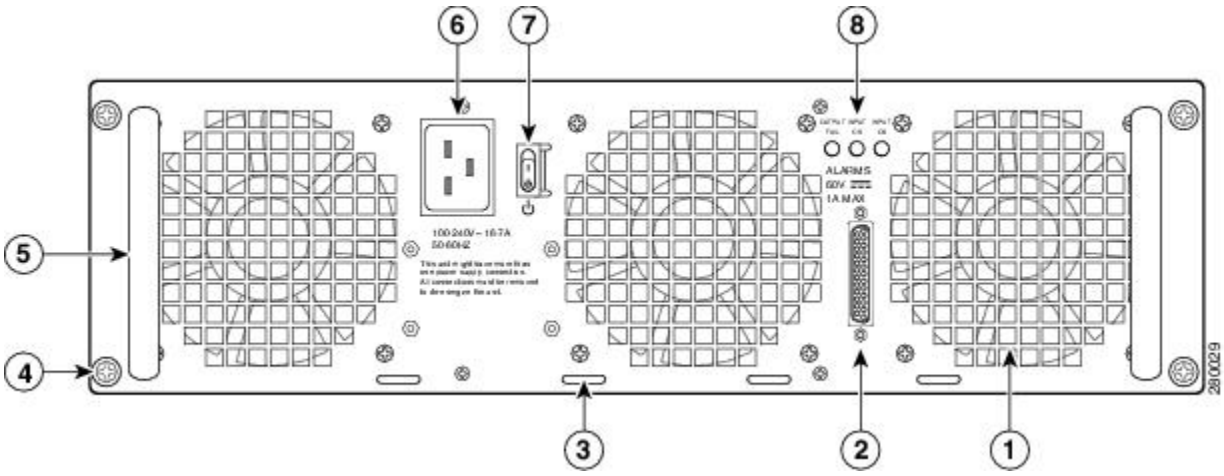

1	AC power supply fan	5	AC power supply handle
2	DB-25 alarm connector*	6	AC power inlet
3	Cable tie-wrap tabs	7	AC power supply Standby switch. A Standby switch is not considered a disconnect.
4	AC power supply captive screws	8	AC power supply LEDs

*For information about the DB-25 alarm connector, how it works, and Cisco ASR 1000 series route processor LEDs, see xref "How Cisco ASR1000-RP Alarm Monitoring Works" section on page 2-20. Note: Shielded cables must be used to connect to the DB-25 alarm connector on both the AC and DC power supplies, in order to comply with FCC/EN55022/CISPR22 Class A emissions requirements.	

The following figure shows the ASR1013/06-PWR-AC power supply of the Cisco ASR 1006 Router.

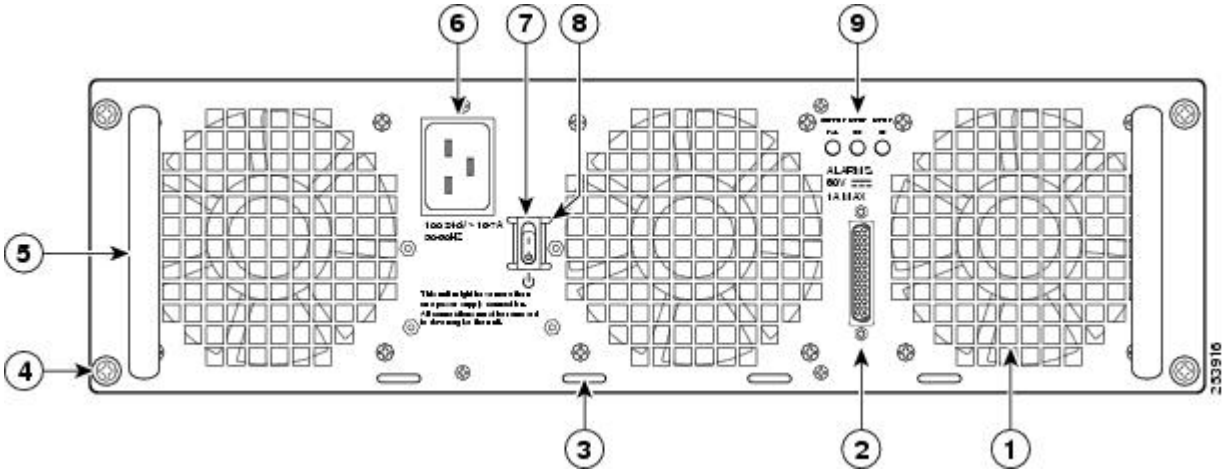

1	AC power supply fan	6	AC power inlet
2	DB-25 alarm connector	7	AC power supply Standby switch
3	Tie-wrap tab	8	Protective shielding on both sides of the Standby switch
4	AC power supply captive screw	9	AC power supply LEDs
5	AC power supply handle	—	—

SUMMARY STEPS

1. Insert an AC power supply in power supply slot 0 or power supply slot 1 until it is fully seated.
2. Tighten the captive screws.
3. Insert the AC power cable.
4. Plug the power supply cable into the power source.
5. Turn the power supply Standby switch to the On (|) position.

DETAILED STEPS

Step 1 Insert an AC power supply in power supply slot 0 or power supply slot 1 until it is fully seated.

Step 2 Tighten the captive screws.

Step 3 Insert the AC power cable.

Step 4 Plug the power supply cable into the power source.

Step 5 Turn the power supply Standby switch to the On (|) position.

What to do next

This completes the procedure for installing the AC power supply in the Cisco ASR 1006 Router.

Removing and Replacing a DC Power Supply in Cisco ASR 1006 Router

This section provides information about removing and installing a DC power supply in the Cisco ASR 1006 Router.

Warning When you install the unit, the ground connection must always be made first and disconnected last. Statement 1046

Warning Before performing any of the following procedures, ensure that power is removed from the DC circuit. Statement 1003

Warning Only trained and qualified personnel should be allowed to install, replace, or service this equipment. Statement 1030

Warning Installation of the equipment must comply with local and national electrical codes. Statement 1074

The following figure shows the ASR1006-PWR-DC power supply and components.

Figure 256: Cisco ASR 1006 Router DC Power Supply (ASR1006-PWR-DC)

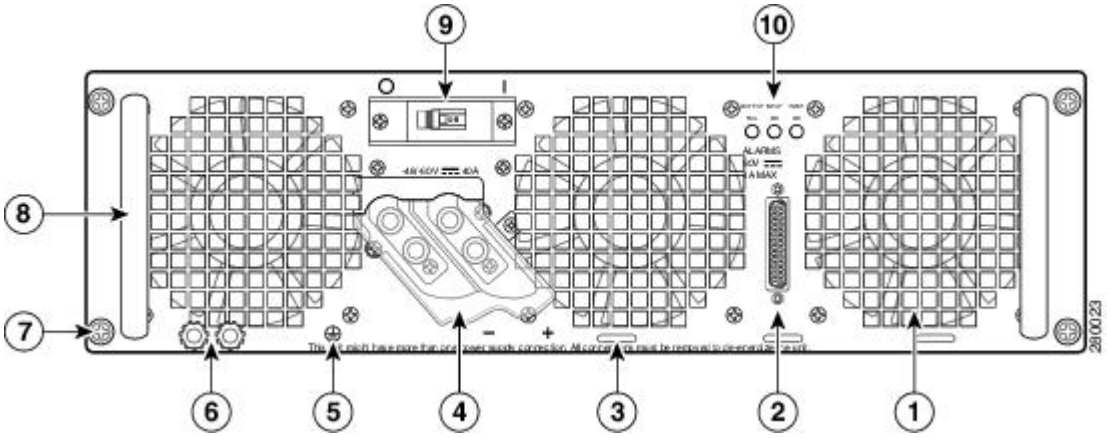

1	Fan	6	DC power supply ground studs
2	DB-25 alarm connector*	7	DC power supply captive screw
3	Tie-wrap tab	8	DC power supply handle
4	DC power supply terminal block and plastic cover	9	On/Off (|/O) circuit breaker switch
5	Ground symbol	10	Power supply LEDs
*For information about the DB-25 alarm connector, how it works, and Cisco ASR 1000 route processor LEDs, see the xref "How Cisco ASR1000-RP Alarm Monitoring Works" section on page 2-20. Note: Shielded cables must be used to connect to the DB-25 alarm connector on both the AC and DC power supplies, in order to comply with FCC/EN55022/CISPR22 Class A emissions requirements.			

The following figure shows the ASR1013/06-PWR-DC power supply and components.

Figure 257: Cisco ASR 1006 Router DC Power Supply (ASR1013/06-PWR-DC)

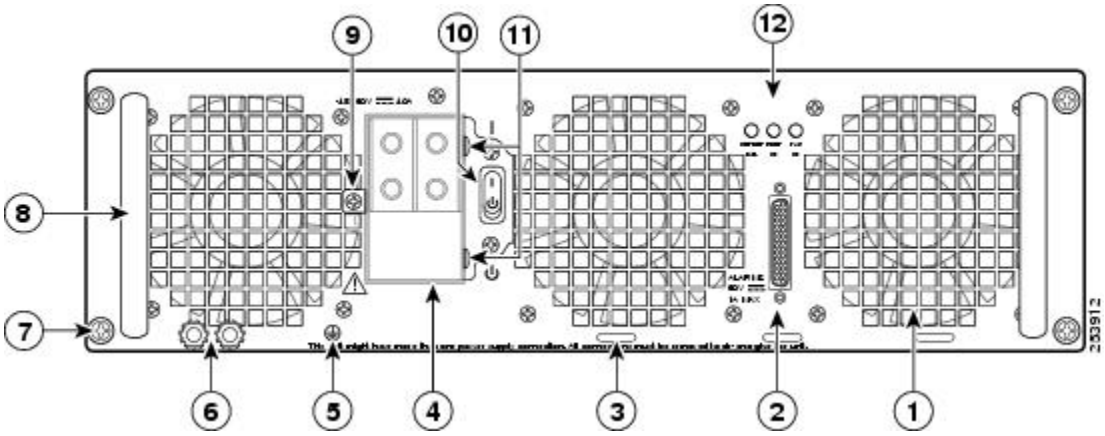

1	Fan	7	DC power supply captive screw
2	DB-25 alarm connector*	8	DC power supply handle
3	Tie-wrap tab	9	Terminal block and plastic cover single screw
4	DC power supply terminal block and plastic cover	10	On/Off (|/O) circuit breaker switch
5	Ground symbol	11	Terminal block and plastic cover slot tab
6	DC power supply ground studs	12	Power supply LEDs
*For information about the DB-25 alarm connector, how it works, and Cisco ASR 1000 route processor LEDs, see the xref "How Cisco ASR1000-RP Alarm Monitoring Works" section on page 2-20. Note: Shielded cables must be used to connect to the DB-25 alarm connector on both the AC and DC power supplies, in order to comply with FCC/EN55022/CISPR22 Class A emissions requirements.			

Removing the DC Power Supply from Cisco ASR 1006 Router

Before you can remove a DC power supply from the Cisco ASR 1006 Router, you must remove power from the power supply. Follow these steps to remove power and the DC power supply from the chassis.

⚠

Caution Make certain that the chassis ground is connected before you begin removing and installing the power supply. For the chassis ground stud location.

SUMMARY STEPS

1. Before servicing the power supply, switch the circuit breaker Off in your equipment area. As an additional precaution, tape the circuit breaker switch in the Off position.
2. Slip on the ESD-preventive wrist strap that was included in the accessory kit.
3. Switch the power supply circuit breaker switch to Off (O).
4. Locate the terminal block on the rear of the chassis on the power supply.
5. Remove the slotted plastic cover from the terminal block (see xref figure).
6. Locate the power supply ground stud (see xref fig). Remove the ground (GND) cable from the DC power supply.
7. Loosen and remove the Kepnut screw, washer, and ground lug in that order.
8. Loosen the four captive screws on the DC power supply.
9. Grasping the power supply handles, pull the power supply from the chassis.
10. Replace the DC power supply within five minutes.

DETAILED STEPS

Step 1 Before servicing the power supply, switch the circuit breaker Off in your equipment area. As an additional precaution, tape the circuit breaker switch in the Off position.

Step 2 Slip on the ESD-preventive wrist strap that was included in the accessory kit.

Step 3 Switch the power supply circuit breaker switch to Off (O).

Step 4 Locate the terminal block on the rear of the chassis on the power supply.

The following figure shows the DC power supply terminal block for the ASR1006-PWR-DC power supply of the Cisco ASR 1006 Router.

Figure 258: Cisco ASR 1006 Router DC Power Supply (ASR1006-PWR-DC) Terminal Block and Plastic Cover

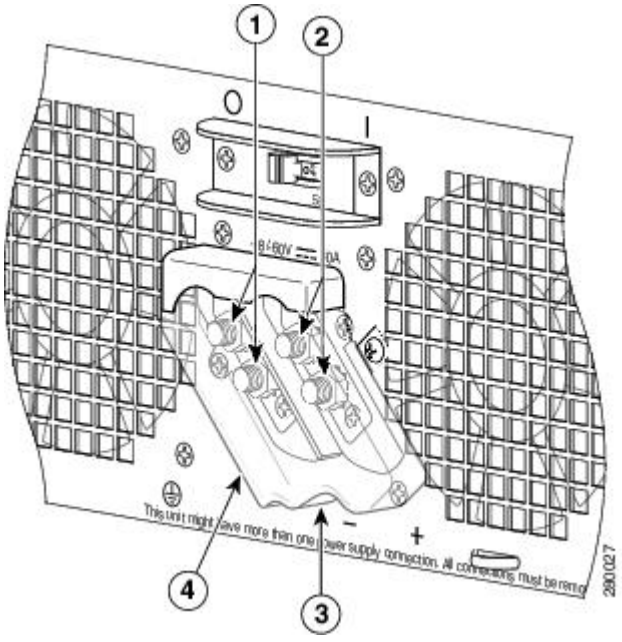

1	Negative terminal	3	Plastic cover slotted area

2	Positive terminal	4	Terminal block plastic cover

The following figure shows the DC power supply terminal block for the ASR1013/06-PWR-DC power supply of the Cisco ASR 1006 Router.

Figure 259: Cisco ASR 1006 Router DC Power Supply (ASR1013/06-PWR-DC) Terminal Block and Plastic Cover

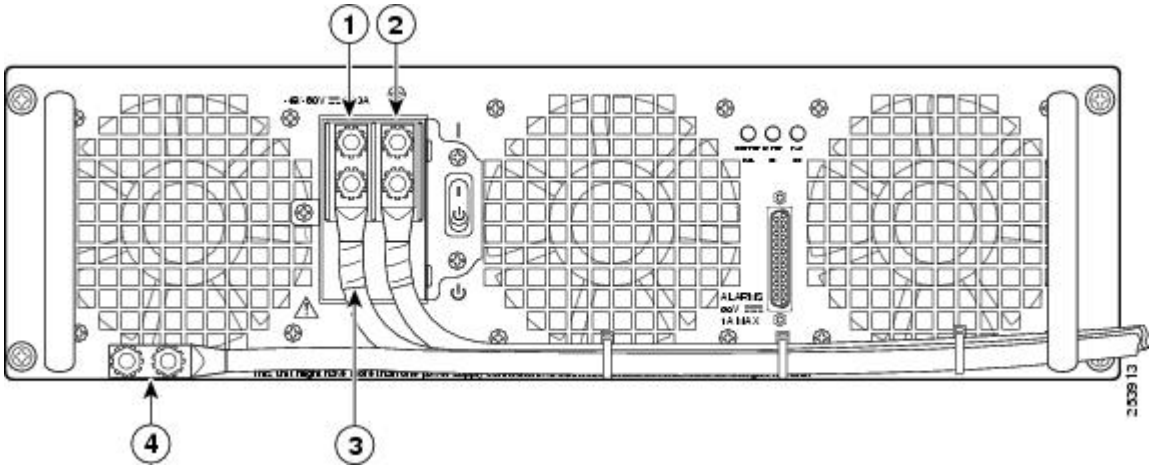

1	Negative lead	3	Protective sleeving around the stud and cable
2	Positive lead	4	Ground stud and cable

Step 5 Remove the slotted plastic cover from the terminal block (see xref figure).

a) Loosen and remove the single screw on the plastic cover. The plastic cover has slots that help to slide it out diagonally from the terminal block.

b) Using a nut driver (7/16 size), unsrew the positive kepnut, positive cable, and the flat washer, in that order. The terminal block houses two double-hole barrel lugs.

c) Follow Step 4b and remove the negative cable.

The following figure shows the DC power supply terminal block with cables connected for the ASR1006-PWR-DC power supply of the Cisco ASR 1006 Router.

Figure 260: Cisco ASR 1006 Router DC Power Supply Terminal Block Cable Connections

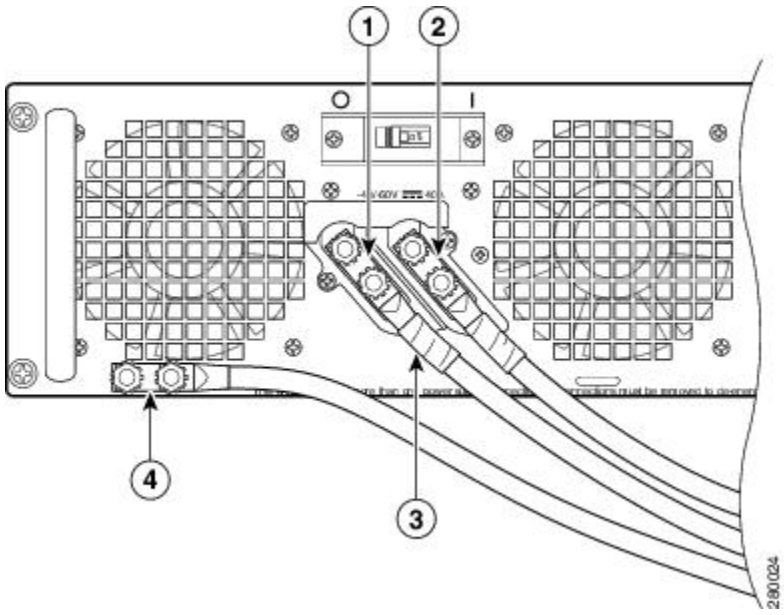

1	Negative lead	3	Protective sleeving around the stud and cable
2	Positive lead	4	Ground stud and cable

The following figure shows the DC power supply terminal block with cables connected for the ASR1013/06-PWR-DC power supply of the Cisco ASR 1006 Router.

Figure 261: Cisco ASR 1006 Router DC Power Supply (ASR1013/06-PWR-DC) Terminal Block Cable Connections

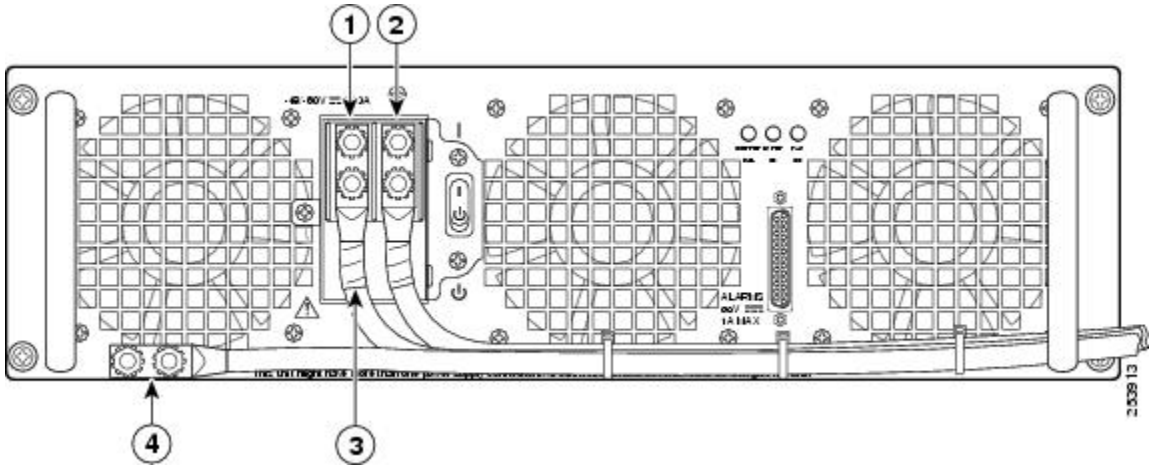

1	Negative lead	3	Protective sleeving around the stud and cable
2	Positive lead	4	Ground stud and cable

Step 6 Locate the power supply ground stud (see xref fig). Remove the ground (GND) cable from the DC power supply.

Step 7 Loosen and remove the Kepnut screw, washer, and ground lug in that order.

Warning When installing the unit, the ground connection must always be made first and disconnected last.

Step 8 Loosen the four captive screws on the DC power supply.

Note Four power supplies must be installed in the chassis at all times, with a minimum of two power supplies (one per zone) connected to the mains in order to power on the system and ensure sufficient cooling. The system fans are inside the power supply units and must spin for cooling. Because all the system fans can be powered by one power supply, the second power supply unit does not have to be powered on, but must be connected.

Caution If you remove a power supply from a system that has four power supplies that are connected and powered on, the system can run only for a maximum of five minutes before shutting down. However, because the fans and power elements are independent within the power supply, the replacement power supply does not have to be energized within five minutes. The only requirement is that the power supply be installed in the chassis in order to energize the fans and maintain proper system cooling.

Step 9 Grasping the power supply handles, pull the power supply from the chassis.

Step 10 Replace the DC power supply within five minutes.

What to do next

This completes the procedure of removing a DC power supply from the Cisco ASR 1006 Router.

Replacing the DC Power Supply in Cisco ASR 1006 Router



Note The color coding of the DC input power supply leads depends on the color coding of the DC power source at your site. Typically, green or green/yellow is used for ground (GND), black is used for –48 V on negative (–) terminal and red is used for RTN on the positive (+) terminal. Make certain the lead color coding you choose for the DC input power supply matches lead color coding used at the DC power source.



Warning When you install the unit, the ground connection must always be made first and disconnected last. Statement 1046

To install the DC power supply, follow these steps:

SUMMARY STEPS

1. Grasp the DC power supply by the two handles and carefully slide it into the chassis. Make sure you align the rear connector to the backplane until it is fully seated.
2. Tighten the captive screws on the power supply.
3. Make certain that the chassis ground is connected before you begin installing the DC power supply.
4. Locate the ground stud on the DC power supply for the **GND** connection which must be installed first and follow these steps:
5. Attach the other end of the ground cable to the site ground associated to the DC power supply system that you are working on.
6. Remove the plastic cover from the terminal block if it is still on.

7. You must wrap the positive and negative power cables with sleeving. Take each wire and cover the area from the lug to the wire with heavy shrink sleeving.
8. For easier cable-management, insert the positive cable first. Replace the ground lug with cable in the following order:
9. Tighten the Kepnut screw (use the screwdriver to tighten the ground screw in the terminal block to a torque of 20+/–2 in-lbs / 2 per.) and repeat the same steps for the negative wires.
10. Use tie wraps to secure the wires, so that the wires are not pulled from the terminal block by casual contact. Ti-wrap studs are located below the power supply terminal block.
11. Replace the terminal block plastic cover, which is slotted and keyed to fit correctly over the terminal block; then tighten the black screw (use the screwdriver to tighten the screw to a torque of 5 in-lbs / 1 per). See the following figure.
12. Remove the tape from the circuit-breaker On/Off switch.
13. Switch the circuit breaker On/Off switch to the On (|) position.

DETAILED STEPS

Step 1 Grasp the DC power supply by the two handles and carefully slide it into the chassis. Make sure you align the rear connector to the backplane until it is fully seated.

Step 2 Tighten the captive screws on the power supply.

Step 3 Make certain that the chassis ground is connected before you begin installing the DC power supply.

Step 4 Locate the ground stud on the DC power supply for the **GND** connection which must be installed first and follow these steps:

a) Using the grounding lug, replace the washers and Kepnut screw in the following order.

- • Flat washer
  • Grounding cable lug
  • Kepnut screw

b) Tighten the Kepnut screws (use the screwdriver to tighten the ground screw to a torque of 20+/–2 in-lbs / 2 per.) on the power supply ground studs.

Step 5 Attach the other end of the ground cable to the site ground associated to the DC power supply system that you are working on.

Step 6 Remove the plastic cover from the terminal block if it is still on.

Caution Before you continue to install the terminal block ground wires, stop and perform Step 7. This is to prevent any contact between the metal power lugs and plastic cover.

Step 7 You must wrap the positive and negative power cables with sleeving. Take each wire and cover the area from the lug to the wire with heavy shrink sleeving.

The following figure shows the terminal block ground lugs for the ASR1006-PWR-DC power supply of the Cisco ASR 1006 Router.

Figure 262: Cisco ASR 1006 Router DC Power Supply (ASR1006-PWR-DC) Terminal Block Ground Lugs

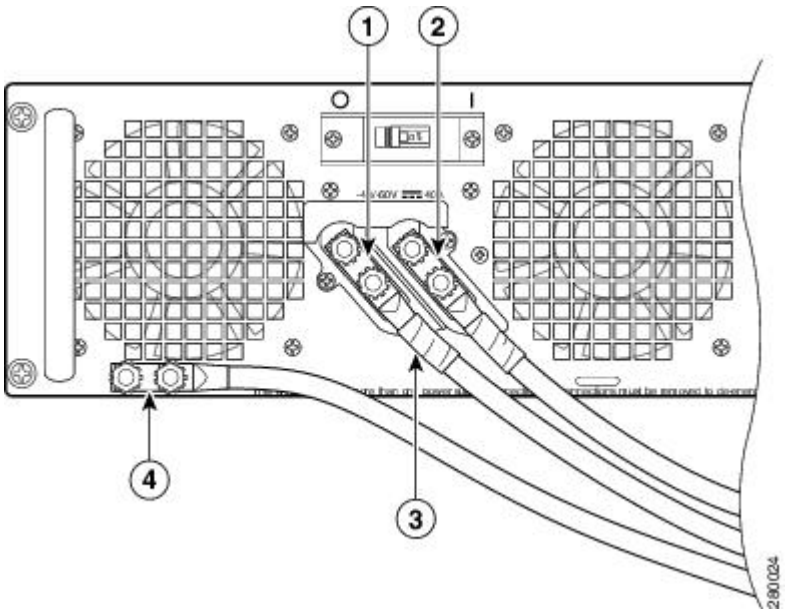

1	Negative lug and wire with sleeving wrapped around the wire and end of lug	3	Protective sleeving area
2	Positive lug and wire with sleeving wrapped around the wire and end of lug	4	Ground stud and cable

The following figure shows the terminal block ground lugs for the ASR1013/06-PWR-DC power supply of the Cisco ASR 1006 Router.

Figure 263: Cisco ASR 1006 Router DC Power Supply (ASR1013/06-PWR-DC) Ground Lug Installation

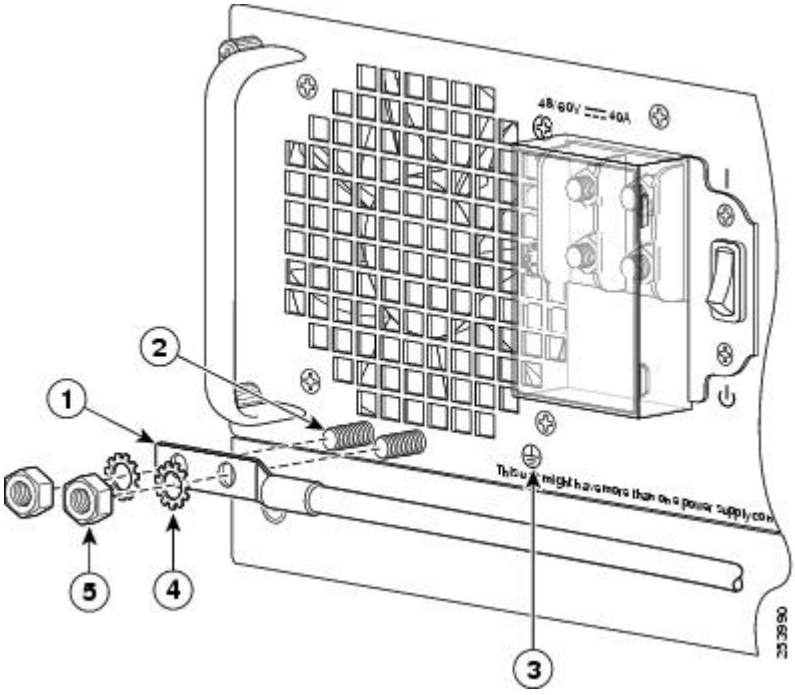

1	DC power supply grounding stud with wire	4	Flat washer
2	Grounding screws	5	Kepnut screw
3	DC power supply ground symbol	—	—

Step 8 For easier cable-management, insert the positive cable first. Replace the ground lug with cable in the following order:

a) Flat Washer
b) Ground lug with positive wire
c) Kepnut screw

Step 9 Tighten the Kepnut screw (use the screwdriver to tighten the ground screw in the terminal block to a torque of 20+/–2 in-lbs / 2 per.) and repeat the same steps for the negative wires.

Note Secure the wires coming in from the terminal block so that they cannot be disturbed by casual contact.

Step 10 Use tie wraps to secure the wires, so that the wires are not pulled from the terminal block by casual contact. Ti-wrap studs are located below the power supply terminal block.

Note The ground wire must contain a loop when securing it to the tie-wrap tab to prevent it from being pulled out.

Step 11 Replace the terminal block plastic cover, which is slotted and keyed to fit correctly over the terminal block; then tighten the black screw (use the screwdriver to tighten the screw to a torque of 5 in-lbs / 1 per). See the following figure.

Figure 264: Cisco ASR 1006 Router DC Power Supply Terminal Block Plastic Cover and Switch

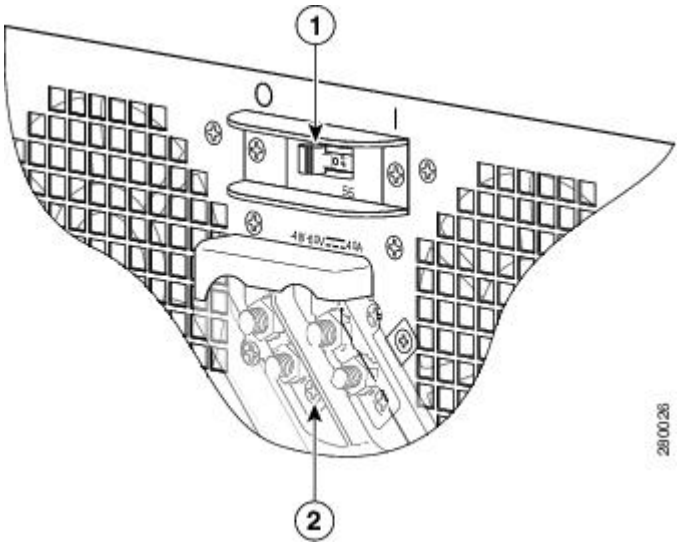

1	DC power supply On/Off switch	2	Terminal block plastic cover black screw

Step 12 Remove the tape from the circuit-breaker On/Off switch.

Step 13 Switch the circuit breaker On/Off switch to the On (|) position.

What to do next

Note The requirement for maximum torque applied to the power or ground Kepnuts must be 8 in-lb when the power or ground lug is not present.

This completes the procedure for installing the DC power supply into the Cisco ASR 1006 Router.

Removing and Replacing the Cisco ASR 1004 Router Power Supplies

The Cisco ASR 1004 Router contains power supplies that are field replaceable units. This section contains the following topics:

Removing and Replacing an AC Power Supply in Cisco ASR 1004 Router

This section provides information about removing and replacing an AC power supply in the Cisco ASR 1004 Router.

Removing the AC Power Supply from Cisco ASR 1004 Router

Because of the power supply redundancy, there is no need to power off the Cisco ASR 1004 Router before removing one of the AC power supplies.

The Cisco ASR 1004 Router has two of the same type power supplies in power supply Slot 0 and power supply Slot 1. See the following figure.

Figure 265: Cisco ASR 1004 Router AC Power Supply Slot 0 and Slot 1

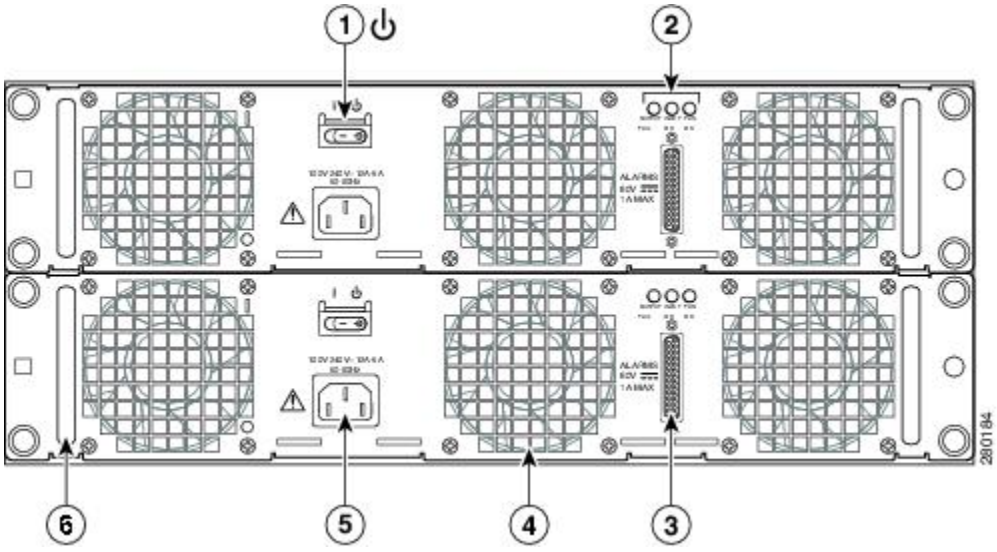

1	AC power supply Standby switch	4	AC power supply fan

2	AC power supply LEDs	5	AC power inlet
3	DB-25 alarm connector*	6	AC power supply handle
*For information about the DB-25 alarm connector, how it works, and Cisco ASR 1000 route processor LEDs, see the xref "How Cisco ASR1000-RP Alarm Monitoring Works" section on page 2-20. Note: Shielded cables must be used to connect to the DB-25 alarm connector on both the AC and DC power supplies, in order to comply with FCC/EN55022/CISPR22 Class A emissions requirements.			

Following these steps to remove an AC power supply from the Cisco ASR 1004 Router.

SUMMARY STEPS

1. Slip on the ESD-preventive wrist strap that was included in the accessory kit.
2. Before you turn off a power supply, make certain the chassis is grounded.
3. Turn the power supply Standby switch to the Standby position.
4. Unplug the power cable from the AC inlet on the back of the power supply and the power source.
5. Unscrew the four power supply captive screws and grasp the handles on both sides of the power supply.
6. Grasping the power supply handles, pull the power supply from the chassis.
7. Replace the AC power supply within five minutes.

DETAILED STEPS

Step 1 Slip on the ESD-preventive wrist strap that was included in the accessory kit.

Step 2 Before you turn off a power supply, make certain the chassis is grounded.

Step 3 Turn the power supply Standby switch to the Standby position.

Step 4 Unplug the power cable from the AC inlet on the back of the power supply and the power source.

Step 5 Unscrew the four power supply captive screws and grasp the handles on both sides of the power supply.

Note Four power supplies must be installed in the chassis at all times, with a minimum of two power supplies (one per zone) connected to the mains in order to power on the system and ensure sufficient cooling. The system fans are inside the power supply units and must spin for cooling. Because all the system fans can be powered by one power supply, the second power supply unit does not have to be powered on, but must be connected.

Caution If you remove a power supply from a system that has four power supplies that are connected and powered on, the system can run only for a maximum of five minutes before shutting down. However, because the fans and power elements are independent within the power supply, the replacement power supply does not have to be energized within five minutes. The only requirement is that the power supply be installed in the chassis in order to energize the fans and maintain proper system cooling.

Step 6 Grasping the power supply handles, pull the power supply from the chassis.

Step 7 Replace the AC power supply within five minutes.

What to do next

This completes the procedure for removing the AC power supply from the Cisco ASR 1004 chassis.

Replacing the AC Power Supply in Cisco ASR 1004 Router

This section provides information about installing an AC power supply in the Cisco ASR 1004 Router.



Warning Never install an AC power module and a DC power module in the same chassis. Statement 1050

SUMMARY STEPS

1. Insert an AC power supply in power supply slot 0 or power supply slot 1 until it is fully seated.
2. Tighten the captive screws.
3. Insert the AC power cable.
4. Plug the power supply cable into the power source.
5. Turn the power supply Standby switch to On (|) position.

DETAILED STEPS

Step 1 Insert an AC power supply in power supply slot 0 or power supply slot 1 until it is fully seated.
Step 2 Tighten the captive screws.
Step 3 Insert the AC power cable.
Step 4 Plug the power supply cable into the power source.
Step 5 Turn the power supply Standby switch to On (|) position.

What to do next

This completes the procedure for installing the AC power supply in the Cisco ASR 1004 Router.

Removing and Replacing a DC Power Supply in Cisco ASR 1004 Router

This section provides information about removing and installing a DC power supply in the Cisco ASR 1004 Router.



Warning When you install the unit, the ground connection must always be made first and disconnected last. Statement 1046

Warning Before performing any of the following procedures, ensure that power is removed from the DC circuit. Statement 1003

Warning Only trained and qualified personnel should be allowed to install, replace, or service this equipment. Statement 1030

Warning Installation of the equipment must comply with local and national electrical codes. Statement 1074

The following figure shows the DC power supply and components for the Cisco ASR 1004 Router.

Figure 266: Cisco ASR 1004 Router DC Power Supply

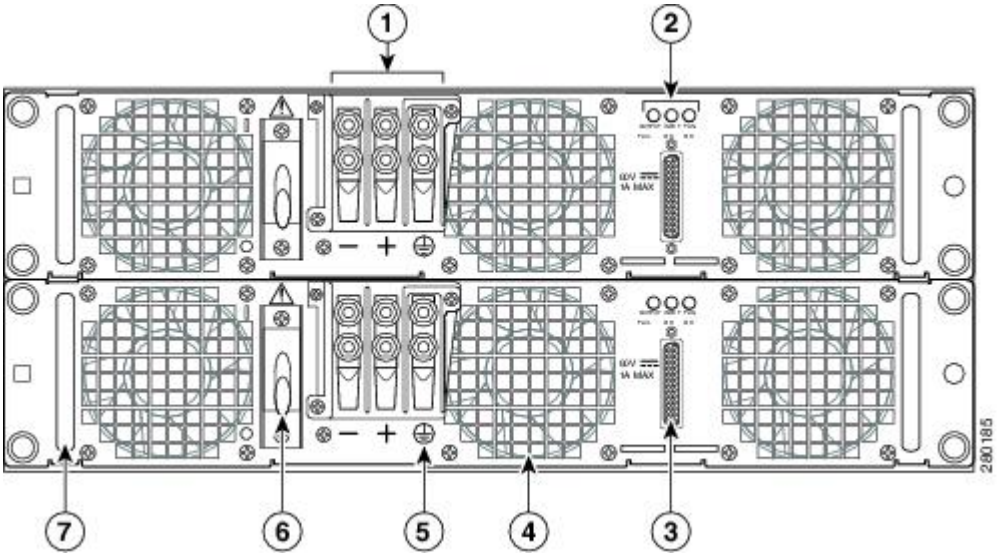

1	DC power supply terminal block and plastic cover	5	DC power supply ground symbol
2	DC power supply LEDs	6	DC power supply On (|)/ Off (O)
3	DB-25 alarm connector*	7	DC power supply handle
4	DC power supply fan	—	—

*For information about the DB-25 alarm connector, how it works, and Cisco ASR 1000 route processor LEDs, see the xref “How Cisco ASR1000-RP Alarm Monitoring Works” section on page 2-20. Note: Shielded cables must be used to connect to the DB-25 alarm connector on both the AC and DC power supplies, in order to comply with FCC/EN55022/CISPR22 Class A emissions requirements.	

Removing the DC Power Supply from the Cisco ASR 1004 Router

Before you can remove a DC power supply from the Cisco ASR 1004 Router, you must remove power from the power supply. Follow these steps to remove power and the DC power supply from the chassis.

SUMMARY STEPS

1. Make certain that the chassis ground is connected before you begin removing the DC power supply.
2. Switch the power supply circuit breaker switch to Off (O).
3. Locate the terminal block on the rear of the chassis on the power supply. The following figure shows the DC power supply terminal block.
4. Remove the slotted plastic cover from the terminal block.
5. Locate the power supply ground stud (see xref fig). Remove the ground (GND) cable from the DC power supply.
6. Loosen and remove the Kepnut screw, washer, and ground lug in that order.
7. Loosen the captive screws on the DC power supply.
8. Grasping the power supply handles, pull the power supply from the chassis.
9. Replace the DC power supply within five minutes.

DETAILED STEPS

Step 1 Make certain that the chassis ground is connected before you begin removing the DC power supply.

Step 2 Switch the power supply circuit breaker switch to Off (O).

Step 3 Locate the terminal block on the rear of the chassis on the power supply. The following figure shows the DC power supply terminal block.

Step 4 Remove the slotted plastic cover from the terminal block.

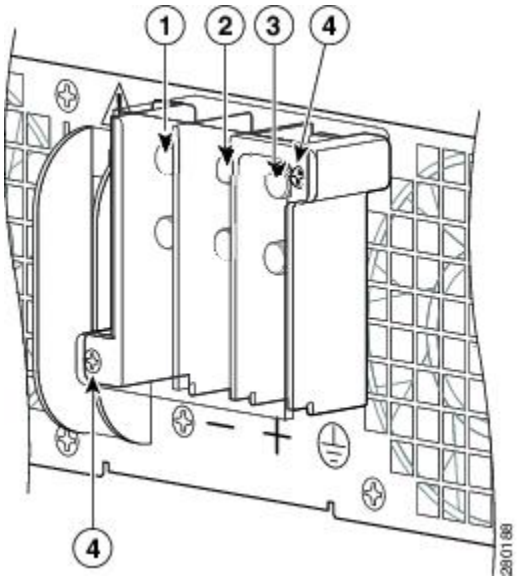

1	Negative terminal	3	Ground stud
2	Positive terminal	4	Terminal block plastic cover screws

a) Loosen and remove the two #10 screws from the plastic cover. The plastic cover has slots that help to slide it out towards the right.
b) Using a nut driver (7/16 size), unscrew the positive kepnut, positive cable, and the flat washer, in that order. The terminal block houses two double-hole barrel lugs.
c) Follow Step 4b and remove the negative cable.

The following figure shows the DC power supply terminal block with lead wires connected.

Figure 267: Cisco ASR 1004 Router DC Power Supply Terminal Block Lead Wire Connection

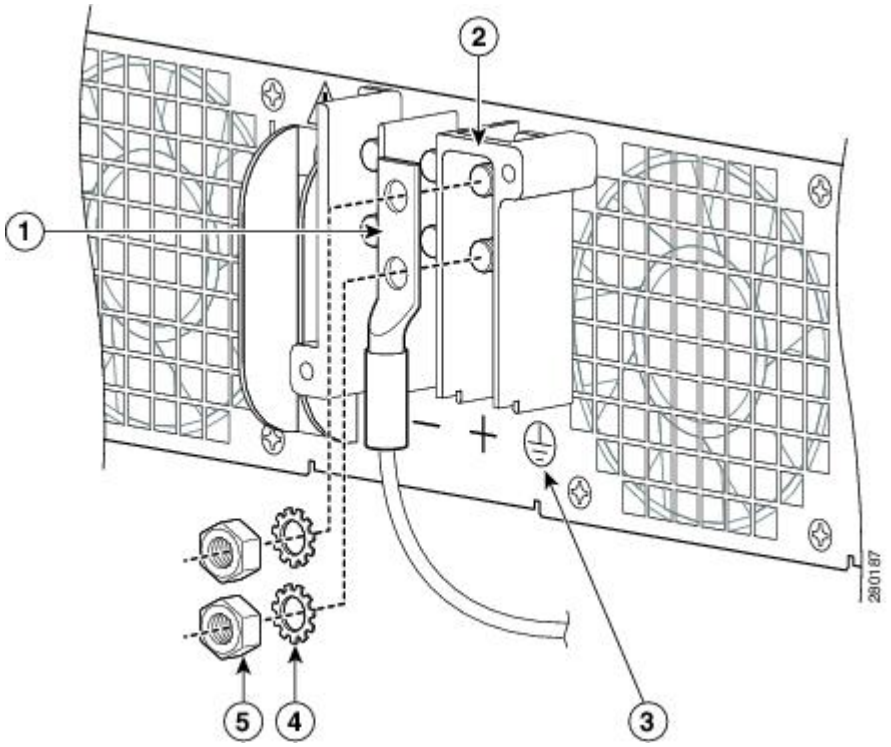

1	Ground stud and wire	4	Flat washer
2	Ground lug nut	5	Kepnut screw
3	Ground symbol	—	—

Step 5 Locate the power supply ground stud (see xref fig). Remove the ground (GND) cable from the DC power supply.

Step 6 Loosen and remove the Kepnut screw, washer, and ground lug in that order.

Warning When installing the unit, the ground connection must always be made first and disconnected last.

Step 7 Loosen the captive screws on the DC power supply.

Note Four power supplies must be installed in the chassis at all times, with a minimum of two power supplies (one per zone) connected to the mains in order to power on the system and ensure sufficient cooling. The system fans are inside the power supply units and must spin for cooling. Because all the system fans can be powered by one power supply, the second power supply unit does not have to be powered on, but must be connected.

Caution If you remove a power supply from a system that has four power supplies that are connected and powered on, the system can run only for a maximum of five minutes before shutting down. However, because the fans and power elements are independent within the power supply, the replacement power supply does not have to be energized within five minutes. The only requirement is that the power supply be installed in the chassis in order to energize the fans and maintain proper system cooling.

Step 8 Grasping the power supply handles, pull the power supply from the chassis.

Step 9 Replace the DC power supply within five minutes.

What to do next

This completes the procedure of removing a DC power supply from the Cisco ASR 1004 Router.

Replacing the DC Power Supply in Cisco ASR 1004 Router

Note The color coding of the DC input power supply leads depends on the color coding of the DC power source at your site. Typically, green or green/yellow is used for ground (GND), black is used for negative (–) terminal and red is used for the positive (+) terminal. Make certain the lead color coding you choose for the DC input power supply matches lead color coding used at the DC power source.

Warning When you install the unit, the ground connection must always be made first and disconnected last. Statement 1046

To install the DC power supply, follow these steps:

SUMMARY STEPS

1. Make certain that the chassis ground is connected before you begin installing the DC power supply.
2. Grasp the DC power supply by the two handles and carefully slide it into the chassis. Make sure you align the rear connector to the backplane until it is fully seated.
3. Tighten the captive screws on the power supply.
4. Locate the power supply terminal block and remove the plastic cover from the terminal block:
5. You must wrap the positive and negative cables with sleeving. Take each ground wire and cover the area from the lug to the wire with heavy shrink sleeving (see xref fig).
6. Attach the GND wire first and follow this order:
7. Tighten the KEP-style hex nut screws (use the screwdriver to tighten the ground screw in the terminal block to a torque of 18-22 in-lbs) on the power supply studs
8. Insert the positive ground cable. Replace the ground lug with cable in the following order:
9. Tighten the KEP-style hex nut screws (use the screwdriver to tighten the positive ground screw in the terminal block to a torque of 18-22 in-lbs) on the power supply ground studs and repeat the same steps for the negative ground stud and wire (see xref fig).
10. Use tie wraps to secure the wires, so that the wires are not pulled from the terminal block by casual contact. Tie-wrap studs are located below the power supply terminal block.
11. Replace the terminal block plastic cover and tighten the screws. The plastic cover slides in easily over the terminal block.
12. If you taped the circuit breaker, then remove the tape from the circuit-breaker switch handle and move the circuit-breaker handle to the on position.
13. Switch the power supply circuit breaker switch to the On (|) position.

DETAILED STEPS

Step 1 Make certain that the chassis ground is connected before you begin installing the DC power supply.

Step 2 Grasp the DC power supply by the two handles and carefully slide it into the chassis. Make sure you align the rear connector to the backplane until it is fully seated.

Step 3 Tighten the captive screws on the power supply.

Step 4 Locate the power supply terminal block and remove the plastic cover from the terminal block:

a) Unscrew and remove the two #10 screws.
b) Slide the cover off the terminal block towards the right.

Caution Before you continue to install the terminal block ground wires, stop and perform Step 5 to prevent any contact with metal lead on the ground wire and the plastic cover.

Step 5 You must wrap the positive and negative cables with sleeving. Take each ground wire and cover the area from the lug to the wire with heavy shrink sleeving (see xref fig).

Step 6 Attach the GND wire first and follow this order:

a) Flat Washer
b) Ground lug with grounding wire
c) KEPnut screw

Step 7 Tighten the KEP-style hex nut screws (use the screwdriver to tighten the ground screw in the terminal block to a torque of 18-22 in-lbs) on the power supply studs

Step 8 Insert the positive ground cable. Replace the ground lug with cable in the following order:

a) Flat Washer
b) Ground lug with positive wire
c) Kepnut screw

Step 9 Tighten the KEP-style hex nut screws (use the screwdriver to tighten the positive ground screw in the terminal block to a torque of 18-22 in-lbs) on the power supply ground studs and repeat the same steps for the negative ground stud and wire (see xref fig).

Note Secure the wires coming in from the terminal block so that they cannot be disturbed by casual contact.

Step 10 Use tie wraps to secure the wires, so that the wires are not pulled from the terminal block by casual contact. Tie-wrap studs are located below the power supply terminal block.

Note The ground wire must contain a loop when securing it to the tie-wrap tab to prevent it from being pulled out.

Step 11 Replace the terminal block plastic cover and tighten the screws. The plastic cover slides in easily over the terminal block.

Step 12 If you taped the circuit breaker, then remove the tape from the circuit-breaker switch handle and move the circuit-breaker handle to the on position.

Step 13 Switch the power supply circuit breaker switch to the On (|) position.

What to do next

This completes the procedure for connecting the DC power supply in the Cisco ASR 1004 Router.

Removing and Replacing the Cisco ASR 1002 Router Power Supplies

The Cisco ASR 1002 Router contains the following power supplies:

- AC power supply
- –48 VDC power supply
- +24 VDC power supply

This section contains the procedures to remove and replace these power supplies in the Cisco ASR 1002 Router, Cisco ASR 1002-F Router, and Cisco ASR 1002-X Router.

Note Unless otherwise noted, the Cisco ASR 1002-F Router AC and –48 VDC power supply and removal and installation remain the same as the Cisco ASR 1002 Router.

This section contains the following topics:

Removing and Replacing an AC Power Supply in Cisco ASR 1002 Router

This section provides information about removing and replacing an AC power supply in the Cisco ASR 1002 Router.

Note You must have both power supplies installed in the Cisco router.

The Cisco ASR 1002 Router has two of the same type power supplies in power supply slot 0 and power supply slot 1. The following figure shows the Cisco ASR 1002 Router AC power supply.

Figure 268: Cisco ASR 1002 Router AC Power Supply

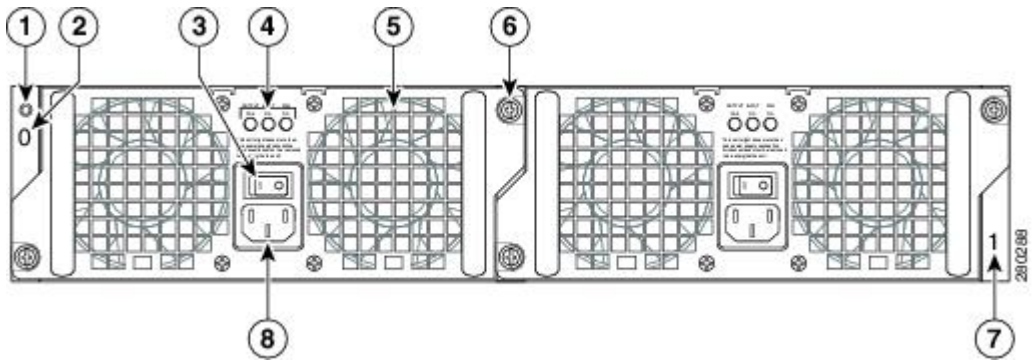

1	AC power supply ESD socket	5	Fan
2	AC power supply slot 0 label	6	Captive installation screw

3	AC power supply On (|) /Off (O) switch	7	AC power supply slot 1 label
4	AC power supply LEDs	8	AC power inlet

Removing the AC Power Supply from Cisco ASR 1002 Router

To remove the AC power supply from the Cisco ASR 1002 Router, follow these steps:

SUMMARY STEPS

1. Slip on the ESD-preventive wrist strap that was included in the accessory kit.
2. Turn the switch to the Off (O) position, remove wiring, and unplug the AC cord.
3. Unscrew all of the power supply captive screws.
4. Grasping the power supply handles, pull the power supply from the chassis.
5. Replace the AC power supply within five minutes.

DETAILED STEPS

Step 1 Slip on the ESD-preventive wrist strap that was included in the accessory kit.

Step 2 Turn the switch to the Off (O) position, remove wiring, and unplug the AC cord.

Step 3 Unscrew all of the power supply captive screws.

Note Two power supplies must be installed in the chassis at all times, with a minimum of one power supply connected to the mains in order to power on the system and ensure sufficient cooling. The system fans are inside the power supply units and must spin for cooling. Because all the system fans can be powered by one power supply, the second power supply unit does not have to be powered on, but must be connected.

Caution If you remove a power supply from a system that are connected and powered on, the system can run only for a maximum of five minutes before shutting down. However, because the fans and power elements are independent within the power supply, the replacement power supply does not have to be energized within five minutes. The only requirement is that the power supply be installed in the chassis in order to energize the fans and maintain proper system cooling.

Step 4 Grasping the power supply handles, pull the power supply from the chassis.

Step 5 Replace the AC power supply within five minutes.

What to do next

This completes the procedure for removing the AC power supply from the Cisco ASR 1002 chassis.

Replacing the AC Power Supply in Cisco ASR 1002 Router

This section provides information about installing an AC power supply in the Cisco ASR 1002 Router.



Warning Never install an AC power module and a DC power module in the same chassis. Statement 1050

SUMMARY STEPS

1. Insert an AC power supply in power supply slot 0 or power supply slot 1 until it is fully seated.
2. Tighten the captive screws.

DETAILED STEPS

Step 1 Insert an AC power supply in power supply slot 0 or power supply slot 1 until it is fully seated.

Step 2 Tighten the captive screws.

Replacing the AC Power Supply in Cisco ASR 1002 Router

To connect AC power to the Cisco ASR 1002 Router, follow these steps:

SUMMARY STEPS

1. At the rear of the router, check that the power switch is in the Off (O) position.
2. Insert the AC power cable into the AC power inlet and then turn On (|).
3. To ensure that the AC power cord does not interfere with other cables or wires, dress the AC power cable in one of the following ways.
4. Plug the AC power supply cable into the AC power source.

DETAILED STEPS

Step 1 At the rear of the router, check that the power switch is in the Off (O) position.

Note Turn the power switch to the On (|) position after both power sides of the power cord are connected.

Step 2 Insert the AC power cable into the AC power inlet and then turn On (|).

Step 3 To ensure that the AC power cord does not interfere with other cables or wires, dress the AC power cable in one of the following ways.

a) Leave a small service loop in the AC power cord from the inlet and then secure the power cord through the AC power supply handle as shown in the following figure. Alternatively, go to step 3b.

Figure 269: Cisco ASR 1002 Router AC Power Supply and Cord in Slot 1

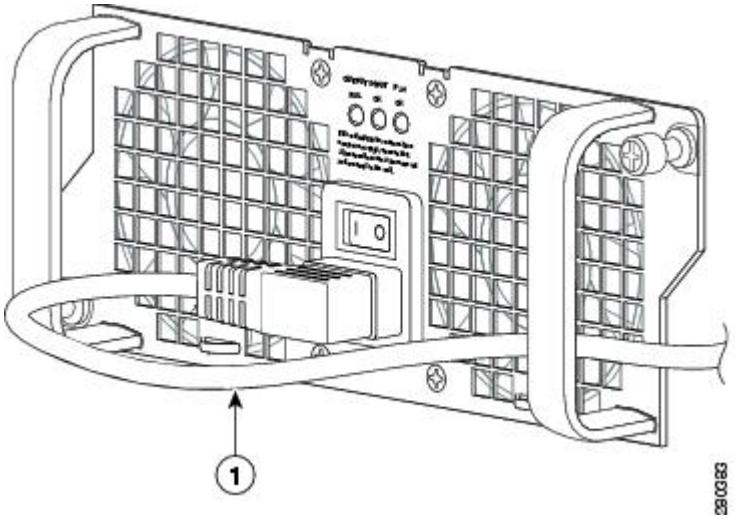

1	AC power cord

b) Take the power cord and run it below the handles of the power supply in slot 1and the power supply in slot 0 (left). Make sure the power cord is hanging loosely so that it cannot be disconnected from the AC power inlet (see the following figure).

Figure 270: Cisco ASR 1002 Router AC Power Cord Through AC Power Supply 0 and 1

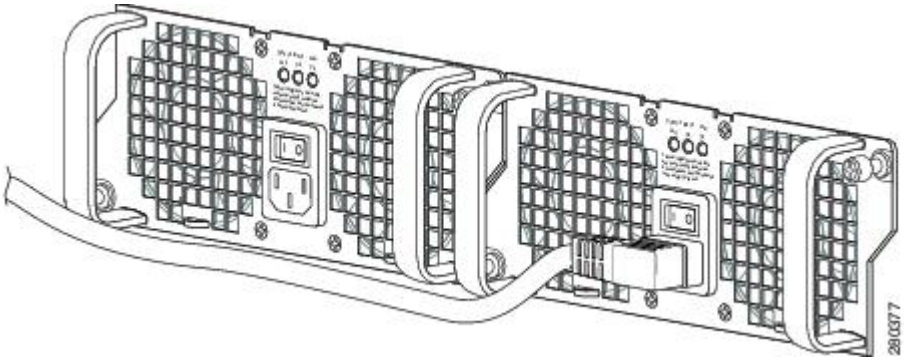

Caution Do not run the AC power cord through the either power supply handles as shown in the following figure.

Figure 271: Cisco ASR 1002 Router Improper AC Power Cord Cabling

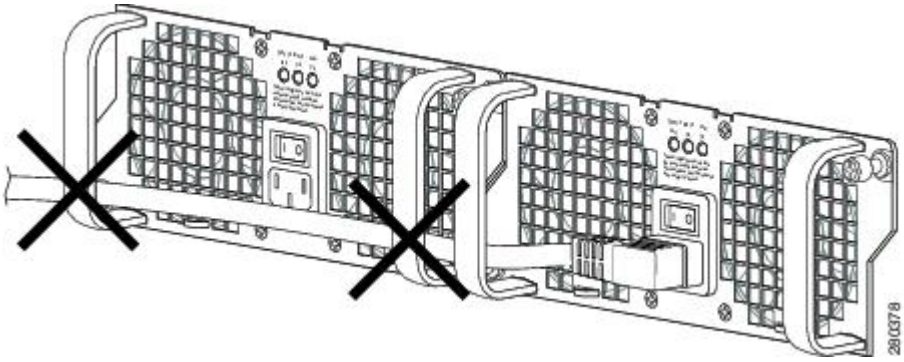

Note Using a tie wrap for the AC power cable is optional and not necessary. However, if you do attach the AC power cable to a power supply tab and then you remove the AC power cable for some reason, check for any damage to the cable after you cut the tie wrap off. If the power cord is damaged, replace it immediately.

Step 4 Plug the AC power supply cable into the AC power source.

Note Two power supplies must be installed in the chassis at all times, with a minimum of one power supply connected to the mains in order to power on the system and ensure sufficient cooling. The system fans are inside the power supply units and must spin for cooling. Because all the system fans can be powered by one power supply, the second power supply unit does not have to be powered on, but must be connected.

Caution If you remove a power supply from a system that are connected and powered on, the system can run only for a maximum of five minutes before shutting down. However, because the fans and power elements are independent within the power supply, the replacement power supply does not have to be energized within five minutes. The only requirement is that the power supply be installed in the chassis in order to energize the fans and maintain proper system cooling.

What to do next

This completes the procedure for installing the AC power supply in the Cisco ASR 1002 Router.

Removing and Replacing a –48 VDC Power Supply in Cisco ASR 1002 Router

This section provides information about removing and installing a –48 VDC power supply in the Cisco ASR 1002 Router.

Warning When you install the unit, the ground connection must always be made first and disconnected last. Statement 1046

Warning Before performing any of the following procedures, ensure that power is removed from the DC circuit. Statement 1003

Warning Only trained and qualified personnel should be allowed to install, replace, or service this equipment. Statement 1030

Warning Installation of the equipment must comply with local and national electrical codes. Statement 1074

The following figure shows the –48 VDC power supply and components for the Cisco ASR 1002 Router.

Figure 272: Cisco ASR 1002 Router –48 VDC Power Supply

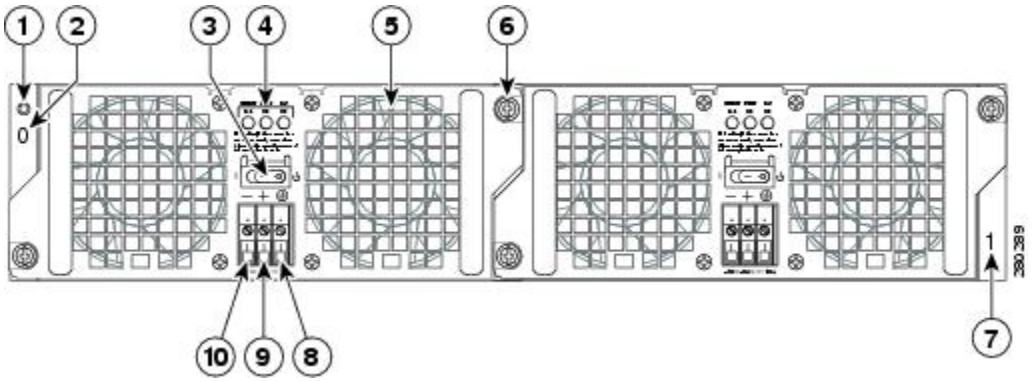

1	Power supply ESD socket	6	Power supply captive installation screw
2	Power supply slot 0 label	7	Power supply slot 1 label
3	Power supply switch Standby/On (|)	8	Ground (GND)
4	Power supply LEDs	9	Positive lead
5	Fan	10	Negative lead

Removing the –48 VDC Power Supply from Cisco ASR 1002 Router

Before you can remove a –48 VDC power supply from the Cisco ASR 1002 Router, you must remove input power going to the power supply.

Caution Make certain that the chassis ground is connected before you begin removing and installing the power supply.

To remove the –48 VDC power supply from the Cisco ASR 1002 Router, follow this procedure:

SUMMARY STEPS

1. Slip on the ESD-preventive wrist strap that was included in the accessory kit.
2. Place the power supply Standby switch in the Standby (see the following figure) position.
3. Turn off the branch circuit breaker before touching terminal screws. Then start loosening the terminal block screws to remove wires.

4. Remove the leads from the terminal block in the following order.
5. Unscrew all of the power supply captive screws.
6. Grasping the power supply handles, pull the power supply from the chassis.
7. Replace the –48 VDC power supply within five minutes.

DETAILED STEPS

Step 1 Slip on the ESD-preventive wrist strap that was included in the accessory kit.

Step 2 Place the power supply Standby switch in the Standby (see the following figure) position.

Figure 273: Cisco ASR 1002 Router –48 VDC Power Supply Terminal Block

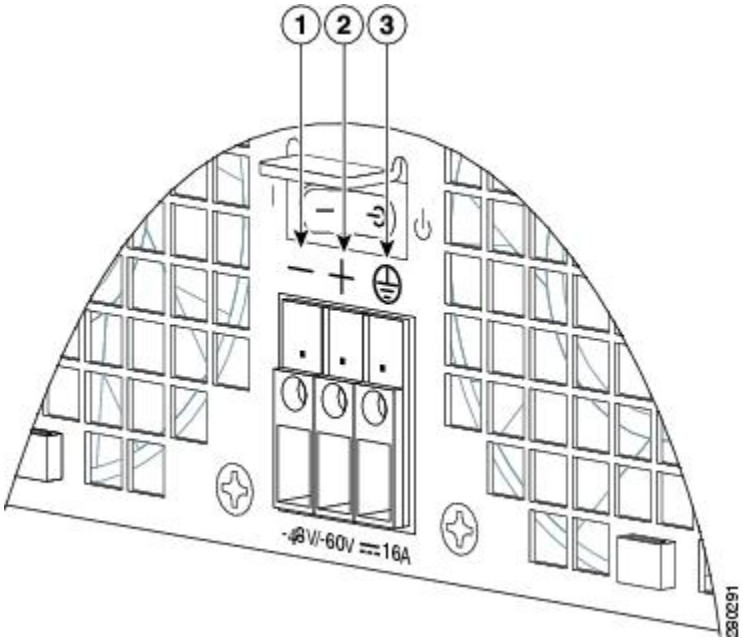

1	Negative terminal	3	Ground terminal
2	Positive terminal	—	—

Step 3 Turn off the branch circuit breaker before touching terminal screws. Then start loosening the terminal block screws to remove wires.

Step 4 Remove the leads from the terminal block in the following order.

a) Negative lead
b) Positive lead
c) Ground lead

Step 5 Unscrew all of the power supply captive screws.

Note Two power supplies must be installed in the chassis at all times, with a minimum of one power supply connected to the mains in order to power on the system and ensure sufficient cooling. The system fans are inside the power supply units and must spin for cooling. Because all the system fans can be powered by one power supply, the second power supply unit does not have to be powered on, but must be connected.

Caution If you remove a power supply from a system that are connected and powered on, the system can run only for a maximum of five minutes before shutting down. However, because the fans and power elements are independent within the power supply, the replacement power supply does not have to be energized within five minutes. The only requirement is that the power supply be installed in the chassis in order to energize the fans and maintain proper system cooling.

Step 6 Grasping the power supply handles, pull the power supply from the chassis.

Step 7 Replace the –48 VDC power supply within five minutes.

What to do next

This completes the procedure of removing a –48 VDC power supply from the Cisco ASR 1002 Router.

Replacing the –48 VDC Power Supply in Cisco ASR 1002 Router

The –48 VDC power supply input connector is a Euro-style terminal block. Features are provide for strain relieving the input wires from the terminal block on the front panel. The ground wire must contain a loop when secured to prevent any strain on the wires. The connection order is negative (–), positive (+), and GND. The recommended branch circuit breaker for the Cisco ASR 1002 Router –48 VDC power supply is 30 A. Use an AWG #10 gauge wire on the 30 A circuit.

This section describes how to connect the –48 VDC power supply in the Cisco ASR 1002 Router.

Note The color coding of the –48 VDC input power supply leads depends on the color coding of the –48 VDC power source at your site. Typically, green or green/yellow is used for ground. Make certain the lead color coding you choose for the –48 VDC input power supply matches lead color coding used at the –48 VDC power source.

Warning When you install the unit, the ground connection must always be made first and disconnected last. Statement 1046

SUMMARY STEPS

1. At the rear of the router, check that the power Standby switch is in the Standby position.
2. Ensure that the positive and negative leads are disconnected from the site power source and the source circuit breaker is turned off.
3. Using a wire stripper, strip approximately 0.55 inch (14 mm) from the negative, positive, and ground leads.
4. Insert the stripped end of the ground lead all the way into the ground lead receptacle on the –48 VDC input power supply, and tighten the receptacle screw using a 3.5 mm flat-blade screwdriver (see the following figure).
5. Insert the stripped end of the positive lead all the way into the positive lead receptacle and tighten the receptacle screw using the same 3.5mm flat-blade screwdriver. Repeat this step for the negative lead.
6. After tightening the receptacle screw for the ground, and leaving the extra service loop in the ground lead, use a cable tie to secure the three leads to the power supply faceplate tie-wrap tab.

7. Turn on the branch source breaker.
8. Place the power supply standby switch to the On (|) position. The power supply LEDs light when power is supplied to the router.

DETAILED STEPS

Step 1 At the rear of the router, check that the power Standby switch is in the Standby position.

Step 2 Ensure that the positive and negative leads are disconnected from the site power source and the source circuit breaker is turned off.

Step 3 Using a wire stripper, strip approximately 0.55 inch (14 mm) from the negative, positive, and ground leads.

Step 4 Insert the stripped end of the ground lead all the way into the ground lead receptacle on the –48 VDC input power supply, and tighten the receptacle screw using a 3.5 mm flat-blade screwdriver (see the following figure).

Figure 274: Cisco ASR 1002 Router –48 VDC Power Supply Terminal Block Lead Wire Connection

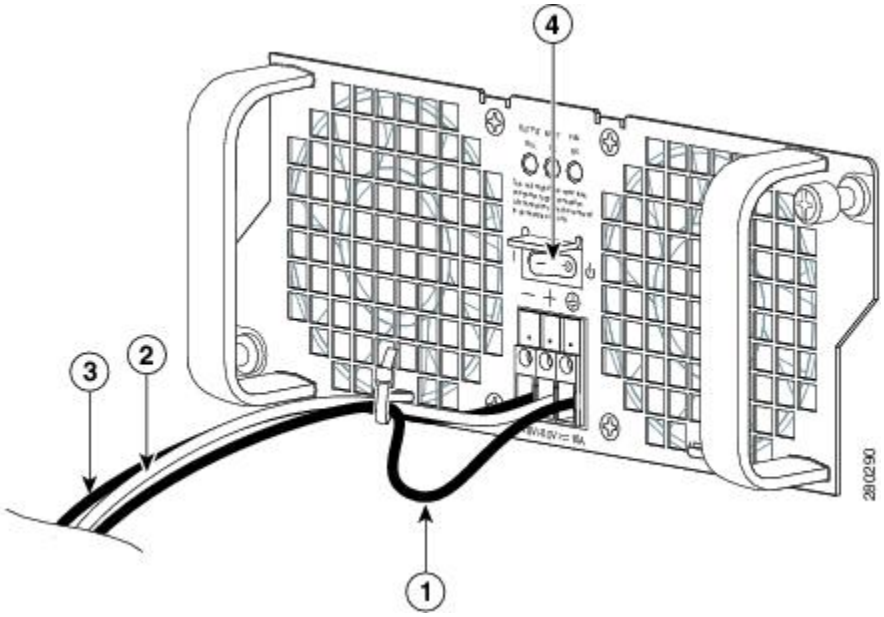

1	Ground lead wire with service loop	3	Power negative lead wire
2	Power positive lead wire	4	Power supply Standby switch

Step 5 Insert the stripped end of the positive lead all the way into the positive lead receptacle and tighten the receptacle screw using the same 3.5mm flat-blade screwdriver. Repeat this step for the negative lead.

Note Make sure the entire stripped end of each lead is inserted all the way into its receptacle. If any exposed wire at the stripped end of a lead is visible after inserting the lead into its receptacle, remove the lead from the receptacle, use the wire stripper to cut the stripped end of the lead, and repeat Step 3 through Step 5.

Step 6 After tightening the receptacle screw for the ground, and leaving the extra service loop in the ground lead, use a cable tie to secure the three leads to the power supply faceplate tie-wrap tab.

Caution When securing the ground, positive, and negative –48 VDC-input leads to the power supply faceplate, leave extra service loop in the ground lead to ensure that the ground lead is the last lead to disconnect from the power supply if a great deal of strain is placed on all three leads as shown in xref fig.

Step 7 Turn on the branch source breaker.

Step 8 Place the power supply standby switch to the On (|) position. The power supply LEDs light when power is supplied to the router.

Removing and Replacing a +24 VDC Power Supply in Cisco ASR 1002 Router

This section provides information about removing and replacing a +24 VDC power supply in the Cisco ASR 1002 Router.

Before you begin, read the following notices:

- The labeling displays +27 VDC INPUT. This labeling describes the nominal voltage provided at a cell site.
- Observe the polarity location—Unlike the polarity labels of the –48 VDC power supply (ground, positive, negative), the polarity labels on the +24 VDC are ground, negative, positive as shown in xref fig from right to left as they appear on the actual power supply unit.
- The ground (GND) lead is always installed first and removed last.
- The +24 VDC power supply uses a spring loaded terminal block; therefore have the recommended screwdriver size available.
- Review the diagrams to see how the wire is stripped and how the screwdriver is inserted at an angle into the terminal block.
- Have the following equipment available to install and remove the +24 VDC power supply:
  - Phoenix Contact 3.5mm flat-blade screwdriver or equivalent
  - Wire-stripping tool for stripping 8-gauge wire



Warning When you install the unit, the ground connection must always be made first and disconnected last. Statement 1046



Warning Before performing any of the following procedures, ensure that power is removed from the DC circuit. Statement 1003



Warning Only trained and qualified personnel should be allowed to install, replace, or service this equipment. Statement 1030

Warning Installation of the equipment must comply with local and national electrical codes. Statement 1074

The following figure shows the +24 VDC power supply and components for the Cisco ASR 1002 Router.

Figure 275: Cisco ASR 1002 Router +24 VDC Power Supply

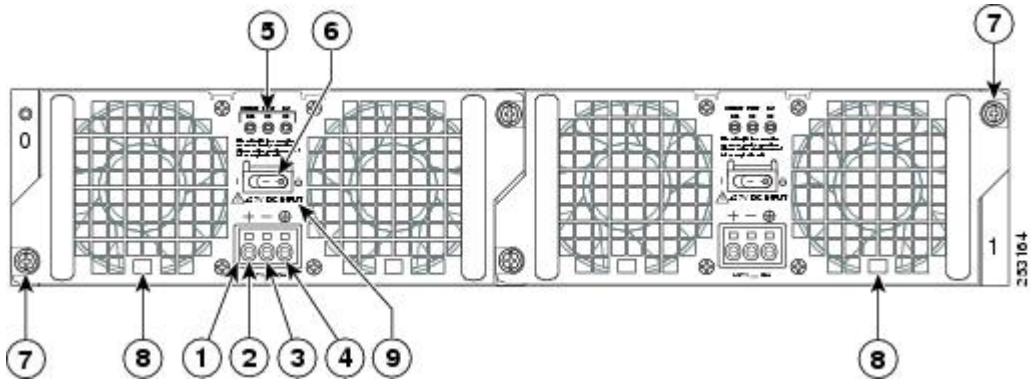

1	+24 VDC terminal block	6	Standby/On switch
2	Positive (+) lead	7	Captive fastener
3	Negative (-) lead	8	Power supply tabs
4	Ground (GND) lead	9	+27 VDC INPUT label
5	Power supply LEDs	—	—

Removing the +24 VDC Power Supply from Cisco ASR 1002 Router

Before you can remove a +24 VDC power supply from the Cisco ASR 1002 Router, you must remove input power going to the power supply.

Caution Make certain that the chassis ground lead wire is connected before you begin removing and installing the power supply.

To remove the +24 VDC power supply from the Cisco ASR 1002 Router, follow these steps:

SUMMARY STEPS

1. Slip on the ESD-preventive wrist strap that was included in the accessory kit.
2. Place the power supply Standby switch in the Standby (see xref fig, item 6) position.
3. Using the recommended screwdriver, insert the screwdriver at an angle, pushing forward to release the internal spring contact on the lead wire and then gently pull out the wire.
4. Remove screwdriver and continue removing the remaining lead wires from the terminal block, repeating Step 4 through Step 5 for each lead wire.
5. Unscrew the two power supply captive screws.
6. Grasping the power supply handles, pull the power supply from the chassis.

7. Replace the +24 VDC power supply within five minutes.

DETAILED STEPS

Step 1 Slip on the ESD-preventive wrist strap that was included in the accessory kit.

Step 2 Place the power supply Standby switch in the Standby (see xref fig, item 6) position.

Step 3 Using the recommended screwdriver, insert the screwdriver at an angle, pushing forward to release the internal spring contact on the lead wire and then gently pull out the wire.

The screwdriver remains pushed into the spring release opening until the wire is completely removed.

Step 4 Remove screwdriver and continue removing the remaining lead wires from the terminal block, repeating Step 4 through Step 5 for each lead wire.

Tip If the 8-gauge input wiring is very rigid or a solid wire, then a screwdriver might not be necessary. As a result of using few-strand heavy gauge wiring, you can insert the wire into the terminal block to release the spring tension. After inserting the lead wire, gently pull on the wire to make certain that the wire is secured. Make certain that no wire is exposed and that only wire insulation is seen.

Step 5 Unscrew the two power supply captive screws.

Note Two power supplies must be installed in the chassis at all times, with a minimum of one power supply connected to the mains in order to power on the system and ensure sufficient cooling. The system fans are inside the power supply units and must spin for cooling. Because all the system fans can be powered by one power supply, the second power supply unit does not have to be powered on, but must be connected.

Caution If you remove a power supply from a system that are connected and powered on, the system can run only for a maximum of five minutes before shutting down. However, because the fans and power elements are independent within the power supply, the replacement power supply does not have to be energized within five minutes. The only requirement is that the power supply be installed in the chassis in order to energize the fans and maintain proper system cooling.

Step 6 Grasping the power supply handles, pull the power supply from the chassis.

Step 7 Replace the +24 VDC power supply within five minutes.

What to do next

This completes the procedure of removing a +24 VDC power supply from the Cisco ASR 1002 Router.

Replacing the +24 VDC Power Supply in Cisco ASR 1002 Router

The +24 VDC power supply uses a spring-loaded terminal block. The input terminal block requires 8 AWG multi-strand wiring to support input current. Features are provide for strain relieving the input wires from the terminal block on the front panel. The recommended branch circuit breaker for the Cisco ASR 1002 Router +24 VDC power supply is 40 A UL listed circuit breaker.

Before you begin, read these important notices about the +24 VDC power supply:

- The labeling displays +27 VDC INPUT. This labeling describes the nominal voltage provided at a cell site.

- Observe the polarity—Unlike the polarity labels of the –48 VDC power supply (ground, positive, negative), the polarity labels on the +24 VDC are ground, negative, positive as shown in xref fig from right to left as they appear on the actual power supply unit.
- The ground (GND) lead is always installed first and removed last.
- The +24 VDC power supply uses a spring loaded terminal block; therefore have the recommended screwdriver size available.
- Review the diagrams to see how the wire is stripped and how the screwdriver is inserted at an angle into the terminal block.
- Have the following equipment available to install and remove the +24 VDC power supply:
  - 3.5mm flat-blade screwdriver
  - 8-gauge wire

The following figure shows the +24 VDC power supply for the Cisco ASR 1002 Router.

Figure 276: +24 VDC Power Supply for the Cisco ASR 1002 Router

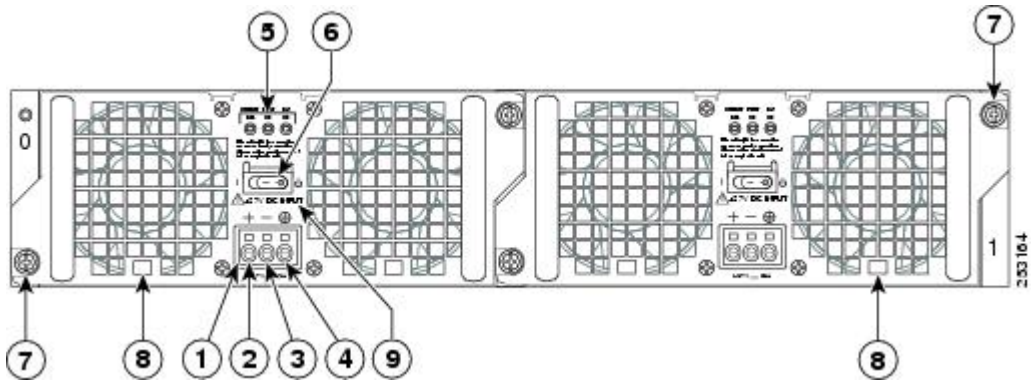

1	+24 VDC terminal block	6	Standby/On switch
2	Positive (+) lead	7	Captive fastener
3	Negative (-) lead	8	Power supply tabs
4	Ground (GND) lead	9	+27 VDC INPUT label
5	Power supply LEDs	—	—

This section describes how to connect the +24 VDC power supply in the Cisco ASR 1002 Router.

Note The color coding of the +24 VDC input power supply leads depends on the color coding of the +24 VDC power source at your site. Typically, green or green/yellow is used for ground. Make certain the lead color coding you choose for the +24 VDC input power supply matches lead color coding used at the +24 VDC power source. Most commonly used wire color-coding is red for positive (+) lead and black for negative (–) lead.

Warning When you install the unit, the ground connection must always be made first and disconnected last. Statement 1046

To connect +24 VDC power supply in the Cisco ASR 1002 Router, follow these steps:

SUMMARY STEPS

1. At the rear of the router, check that the power Standby switch is in the Standby position.
2. Ensure that the positive and negative leads are disconnected from the site power source and the source circuit breaker is turned off.
3. Using a wire stripper, strip the recommended amount of wire insulation which is 15mm (0.6 inch) from the negative, positive, and ground leads.
4. The following figure shows the wire strip and insulation location.
5. Using a 3.5mm screwdriver, insert the screwdriver at an angle to release the spring while you install the stripped lead wire (see the following figure).
6. Carefully push the screwdriver at an angle forward until you relieve the spring contact.
7. With the screwdriver still inserted, gently push the lead wire (ground lead first) in until there is no copper wire showing as shown in the following figure.
8. Make certain no copper wire is visible as shown in the following figure which shows the lead wire fully inserted.
9. After the lead wire is fully inserted, hold the lead wire in place by pressing inward while you remove the screwdriver to release the spring to tension down on the installed lead wire, then perform these steps:
10. Repeat Steps 5 through Step 10 for each lead wire. The following figure shows the leads wires installed in the terminal block.
11. After inserting the ground wire leave an extra service loop in the ground lead to ensure that the ground lead is the last lead to disconnect from the power supply if a great deal of strain is placed on all three leads as shown in the following figure, callout 1.
12. After tightening the receptacle screw for the ground, and leaving the extra service loop in the ground lead, use a cable tie to secure the three leads to the power supply faceplate tie-wrap tab as shown in xref fig, callout 5.
13. Turn on the branch source breaker.
14. Place the power supply standby switch to the On (|) position. The power supply LEDs light when power is supplied to the router.

DETAILED STEPS

Step 1 At the rear of the router, check that the power Standby switch is in the Standby position.

Step 2 Ensure that the positive and negative leads are disconnected from the site power source and the source circuit breaker is turned off.

Step 3 Using a wire stripper, strip the recommended amount of wire insulation which is 15mm (0.6 inch) from the negative, positive, and ground leads.

Note The stripping length is common to all types of wire used.

Step 4 The following figure shows the wire strip and insulation location.

Figure 277: Wire Strip and Lead for the +24 VDC Terminal Block

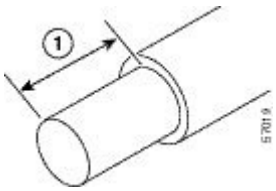

1	Lead wire stripped area	—	—

Step 5 Using a 3.5mm screwdriver, insert the screwdriver at an angle to release the spring while you install the stripped lead wire (see the following figure).

Figure 278: Inserting a Screwdriver into the +24 VDC Power Supply Terminal Block

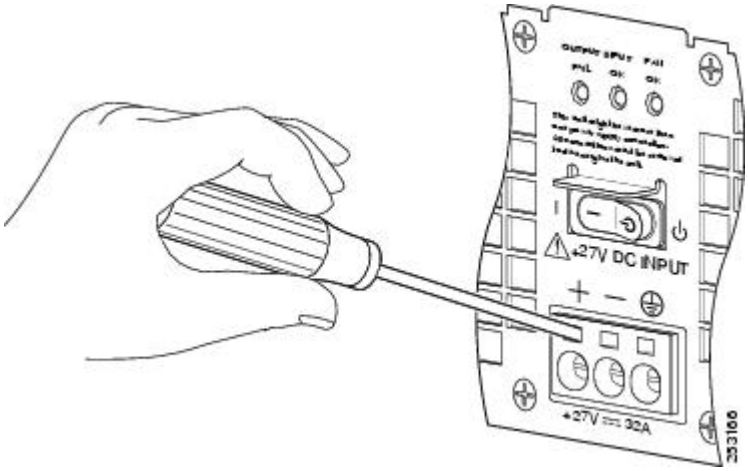

Step 6 Carefully push the screwdriver at an angle forward until you relieve the spring contact.

Step 7 With the screwdriver still inserted, gently push the lead wire (ground lead first) in until there is no copper wire showing as shown in the following figure.

Caution Check that there is no copper portion of the lead wire exposed. Only wire insulation must be visible.

Caution Do not install wire into the terminal block that has not had its insulation removed.

The following figure shows the +24 VDC power supply lead wire inserted into the terminal block.

Figure 279: Cisco ASR 1002 Router +24 VDC Power Supply Lead Wire Inserted into the Terminal Block

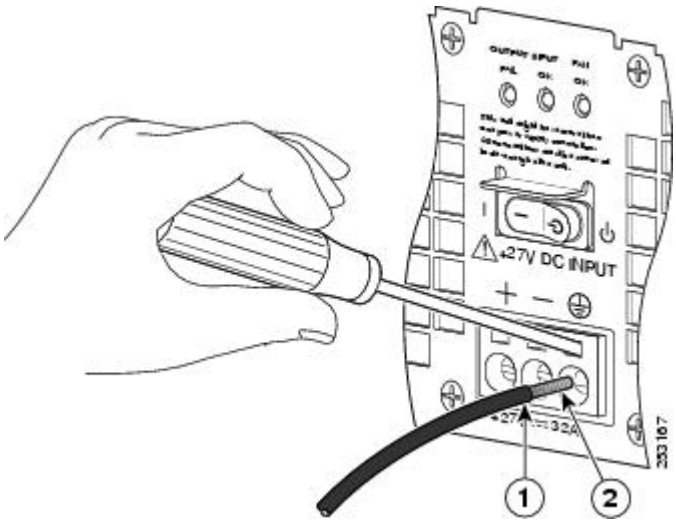

1	Lead wire insulation	2	Copper wire

Step 8 Make certain no copper wire is visible as shown in the following figure which shows the lead wire fully inserted.

Figure 280: Cisco ASR 1002 Router +24 VDC Power Supply Lead Wire Fully Inserted

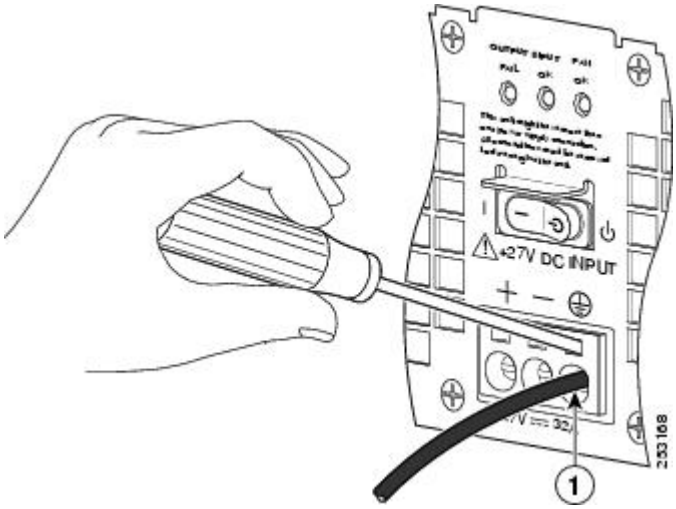

1	Fully-inserted lead wire	—	—

Step 9 After the lead wire is fully inserted, hold the lead wire in place by pressing inward while you remove the screwdriver to release the spring to tension down on the installed lead wire, then perform these steps:

a) Hold the lead wire in place while you are removing the screwdriver.

b) Once the screwdriver is completely removed, gently pull on the lead wire to make certain that the lead wire is securely installed.

The following figure shows a lead wire fully inserted and the screwdriver removed while you gently pull on the lead to make certain it is secured in the terminal block.

Figure 281: Removing a Screwdriver from the +24 VDC Power Supply Terminal Block

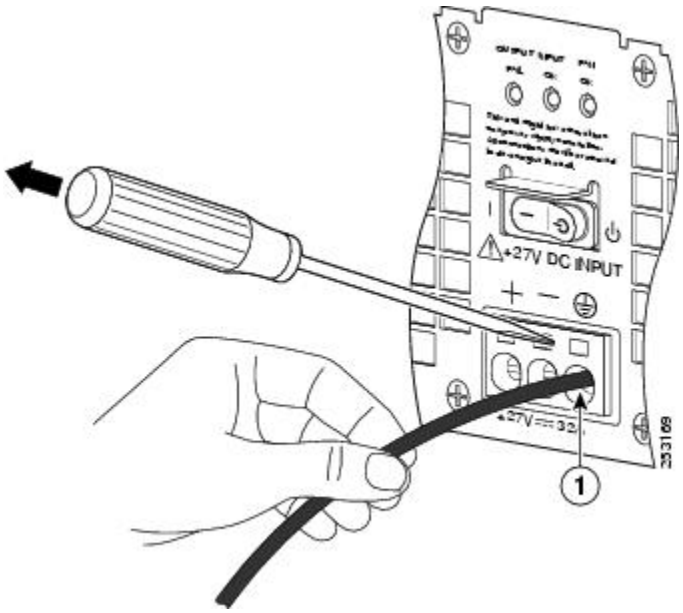

1	Gently pull on lead wire.	—	—

Step 10 Repeat Steps 5 through Step 10 for each lead wire. The following figure shows the leads wires installed in the terminal block.

Figure 282: Cisco +24 VDC Power Supply Terminal Block with Lead Wires Installed

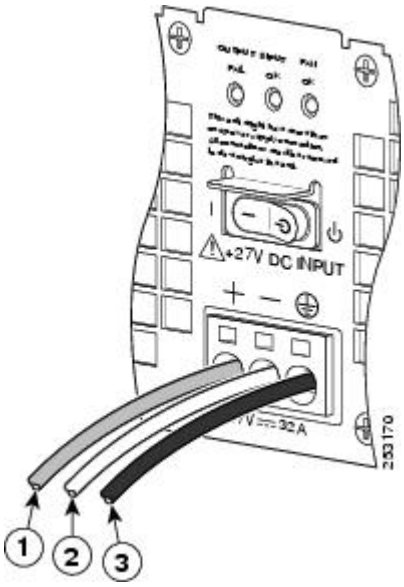

1	Positive lead wire	3	Ground lead wire
2	Negative lead wire	—	—

Note Make sure the stripped end of each lead wire is twisted tightly together. This makes insertion easier. Then make certain the entire lead wire is inserted all the way into its receptacle. If any exposed wire at the stripped end of a lead is visible after inserting the lead into its receptacle, remove the lead from the receptacle, use the wire stripper to cut the stripped end of the lead, and then reinsert.

Caution When securing the ground, positive, and negative +24 VDC-input leads to the power supply faceplate, leave extra service loop in the ground (GND) lead to ensure that the ground lead is the last lead wire to disconnect from the power supply if a great deal of strain is placed on all three leads.

Step 11 After inserting the ground wire leave an extra service loop in the ground lead to ensure that the ground lead is the last lead to disconnect from the power supply if a great deal of strain is placed on all three leads as shown in the following figure, callout 1.

Figure 283: Cisco ASR 1002 Router +24 VDC Power Supply Terminal Block Service Loop

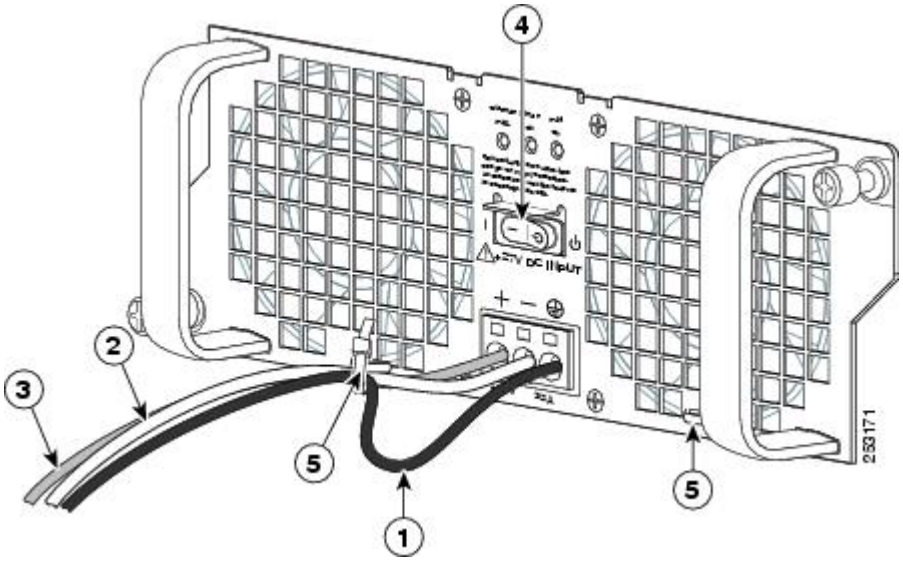

1	Ground lead wire with service loop	4	+24 VDC power supply Standby switch
2	Negative lead wire	5	Power supply tabs
3	Positive lead wire	—	—

Step 12 After tightening the receptacle screw for the ground, and leaving the extra service loop in the ground lead, use a cable tie to secure the three leads to the power supply faceplate tie-wrap tab as shown in xref fig, callout 5.

Step 13 Turn on the branch source breaker.

Step 14 Place the power supply standby switch to the On (|) position. The power supply LEDs light when power is supplied to the router.

What to do next

This completes the steps for installing the +24 VDC power supply in the Cisco ASR 1002 Router.

Removing and Replacing the Cisco ASR 1013 Router Power Supplies

The Cisco ASR 1013 Router contains power supplies that are field replaceable units. This section contains the following topics:

Removing and Replacing an AC Power Supply in Cisco ASR 1013 Router

This section provides information about removing and replacing an AC power supply in the Cisco ASR 1013 Router.

Removing the AC Power Supply from Cisco ASR 1013 Router

Because of the power supply redundancy, there is no need to power off the Cisco ASR 1013 Router before removing one of the AC power supplies.

The Cisco ASR 1013 Router has two of the same type power supplies in power supply slot 0 and power supply slot 1.

To remove the Cisco ASR 1013 Router AC power supply that is not operating normally (and then replace the AC power supply within five minutes), follow this procedure:

SUMMARY STEPS

1. Slip on the ESD-preventive wrist strap that was included in the accessory kit.
2. Before you turn off a power supply, make certain the chassis is grounded.
3. Turn the power supply standby switch to the Standby position. See the following figure.
4. Unplug the power cable from the AC inlet on the back of the power supply and the power source.
5. Unscrew the power supply captive screws.
6. Grasping the power supply handles, pull the power supply from the chassis.
7. Replace the AC power supply within five minutes.

DETAILED STEPS

Step 1 Slip on the ESD-preventive wrist strap that was included in the accessory kit.

Step 2 Before you turn off a power supply, make certain the chassis is grounded.

Step 3 Turn the power supply standby switch to the Standby position. See the following figure.

Figure 284: Cisco ASR 1013 Router AC Power Inlet and Standby Switch

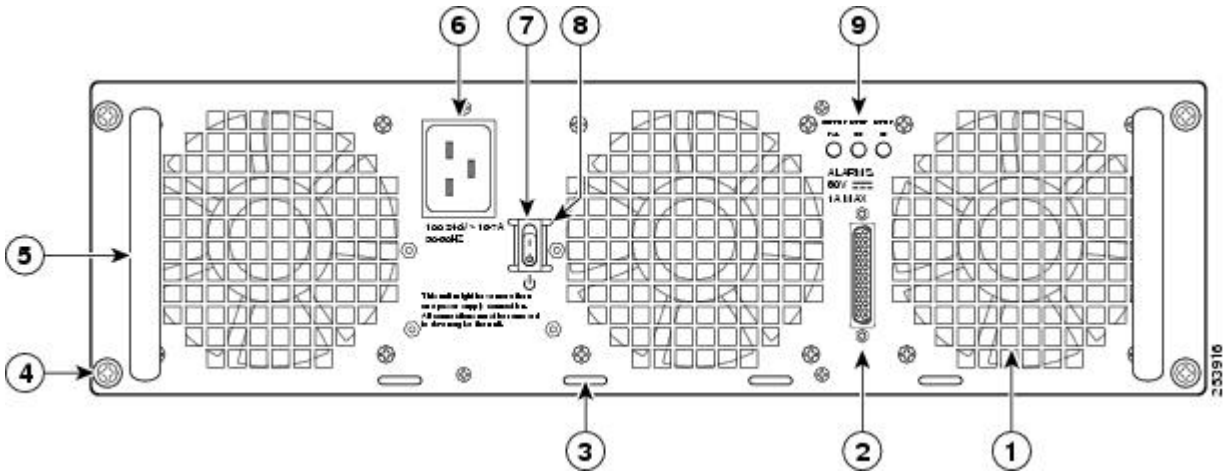

1	AC power supply fan	6	AC power inlet
2	DB-25 alarm connector*	7	AC power supply standby switch. A standby switch is not considered a disconnect.
3	Cable tie wrap tabs	8	Protective sides around the standby switch
4	AC power supply captive screws	9	AC power supply LEDs
5	AC power supply handle	—	—
*For information about the DB-25 alarm connector, how it works, and Cisco ASR 1000 series route processor LEDs, see the xref section. Note: Shielded cables must be used to connect to the DB-25 alarm connector on both the AC and DC power supplies, in order to comply with FCC/EN55022/CISPR22 Class A emissions requirements.			

Step 4 Unplug the power cable from the AC inlet on the back of the power supply and the power source.

Step 5 Unscrew the power supply captive screws.

Note The Cisco ASR 1013 router has two power zones, each containing two power supplies for a redundant system. Power supplies must be installed in the chassis at all times to ensure sufficient cooling. The system fans are inside the power supply units and must spin for cooling. Because all the system fans can be powered by one power supply, the second power supply unit does not have to be powered on, but it must be installed.

Caution If you remove a power supply, the system can run for a maximum of five minutes before the system shuts down. The fans and power elements are independent within the power supply. Therefore, it is not required that the replacement power supply be energized within five minutes. The only requirement is that the power supply be installed in the chassis, which energizes the fans and maintains proper system cooling.

Step 6 Grasping the power supply handles, pull the power supply from the chassis.

Step 7 Replace the AC power supply within five minutes.

What to do next

This completes the procedure for removing the AC power supply from the Cisco ASR 1013 chassis.

Replacing the AC Power Supply in Cisco ASR 1013 Router

This section provides information about installing an AC power supply in the Cisco ASR 1013 Router.



Danger Never install an AC power module and a DC power module in the same chassis. Statement 1050

SUMMARY STEPS

1. Insert an AC power supply in power supply slot 0 or power supply slot 1 until it is fully seated.
2. Tighten the captive screws.
3. Insert the AC power cable.
4. Plug the power supply cable into the power source.
5. Turn the power supply Standby switch to the On (|) position.

DETAILED STEPS

Step 1 Insert an AC power supply in power supply slot 0 or power supply slot 1 until it is fully seated.

Step 2 Tighten the captive screws.

Step 3 Insert the AC power cable.

Step 4 Plug the power supply cable into the power source.

Step 5 Turn the power supply Standby switch to the On (|) position.

What to do next

This completes the procedure for installing the AC power supply in the Cisco ASR 1013 Router.

Removing and Replacing a DC Power Supply in Cisco ASR 1013 Router

This section provides information about removing and installing a DC power supply in the Cisco ASR 1013 Router.



Warning When you install the unit, the ground connection must always be made first and disconnected last. Statement 1046

Warning Before performing any of the following procedures, ensure that power is removed from the DC circuit. Statement 1003

Warning Only trained and qualified personnel should be allowed to install, replace, or service this equipment. Statement 1030

Warning Installation of the equipment must comply with local and national electrical codes. Statement 1074

The following figure shows the DC power supply and components for the Cisco ASR 1013 Router.

Figure 285: Cisco ASR 1013 Router DC Power Supply

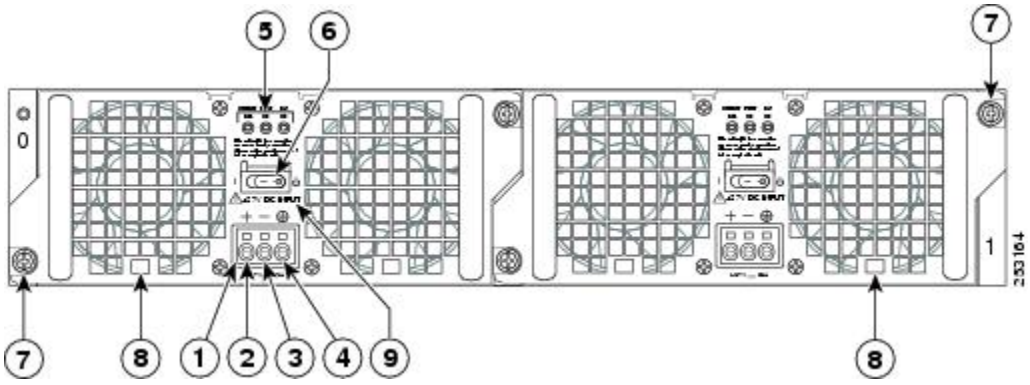

1	Fan	7	DC power supply captive screw
2	DB-25 alarm connector*	8	DC power supply handle
3	Tie-wrap tab	9	Terminal block and plastic cover single screw
4	DC power supply terminal block and plastic cover	10	On/Off (|/O) circuit breaker switch
5	Ground symbol	11	Terminal block and plastic cover slot tab
6	DC power supply ground studs	12	Power supply LEDs

*For information about the DB-25 alarm connector, how it works, and Cisco ASR 1000 route processor LEDs, see the xref section. Note: Shielded cables must be used to connect to the DB-25 alarm connector on both the AC and DC power supplies, in order to comply with FCC/EN55022/CISPR22 Class A emissions requirements.	

Removing the DC Power Supply from Cisco ASR 1013 Router

Before you can remove a DC power supply from the Cisco ASR 1013 Router, you must remove power from the power supply. Follow these steps to remove power and the DC power supply from the chassis.

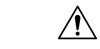

Caution Make certain that the chassis ground is connected before you begin removing and installing the power supply.

SUMMARY STEPS

1. Before servicing the power supply, switch the circuit breaker Off in your equipment area. As an additional precaution, tape the circuit breaker switch in the Off position.
2. Slip on the ESD-preventive wrist strap that was included in the accessory kit.
3. Switch the power supply circuit breaker switch to Off (O).
4. Locate the terminal block on the rear of the chassis on the power supply.
5. Remove the slotted plastic cover from the terminal block (see xref fig).
6. Loosen the four captive screws on the DC power supply.
7. Grasping the power supply handles, pull the power supply from the chassis.
8. Replace the DC power supply within five minutes.

DETAILED STEPS

Step 1 Before servicing the power supply, switch the circuit breaker Off in your equipment area. As an additional precaution, tape the circuit breaker switch in the Off position.

Step 2 Slip on the ESD-preventive wrist strap that was included in the accessory kit.

Step 3 Switch the power supply circuit breaker switch to Off (O).

Step 4 Locate the terminal block on the rear of the chassis on the power supply.

The following figure shows the DC power supply terminal block and plastic cover.

Figure 286: Cisco ASR 1013 Router DC Power Supply Terminal Block and Plastic Cover

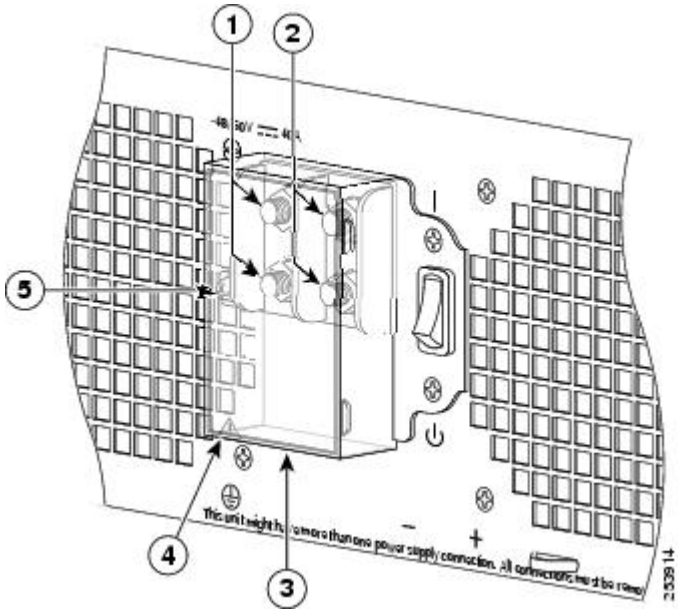

1	Negative terminal	4	Plastic cover slotted area
2	Positive terminal	5	Terminal block plastic cover single screw
3	Terminal block plastic cover	—	—

Step 5 Remove the slotted plastic cover from the terminal block (see xref fig).

a) Loosen and remove the single screw on the plastic cover. The plastic cover has slots that help to slide it out diagonally from the terminal block.

b) Using a nut driver (7/16 size), unsrew the positive kepnut, positive cable, and the flat washer, in that order. The terminal block houses two double-hole barrel lugs.

c) Follow Step 4b and remove the negative cable. The following figure shows the DC power supply terminal block.

Figure 287: Cisco ASR 1013 Router DC Power Supply Terminal Block Cable Connections

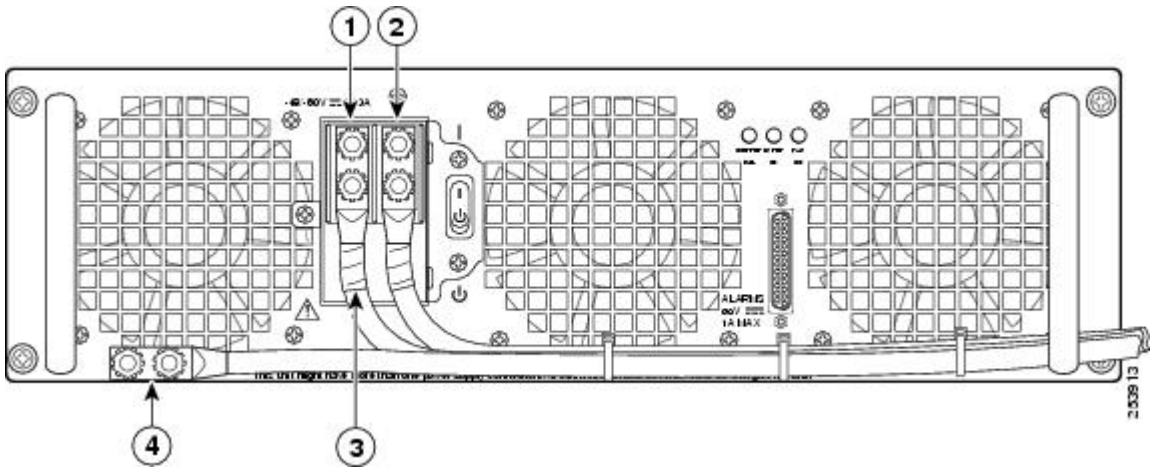

1	Negative lead	3	Protective sleeving around the stud and cable
2	Positive lead	4	Ground stud and cable

Warning When removing the unit, the ground connection must always be made first and disconnected last.

Step 6 Loosen the four captive screws on the DC power supply.

Note Four power supplies must be installed in the chassis at all times, with a minimum of two power supplies (one per zone) connected to the mains in order to power on the system and ensure sufficient cooling. The system fans are inside the power supply units and must spin for cooling. Because all the system fans can be powered by one power supply, the second power supply unit does not have to be powered on, but must be connected.

Caution If you remove a power supply from a system that has four power supplies that are connected and powered on, the system can run only for a maximum of five minutes before shutting down. However, because the fans and power elements are independent within the power supply, the replacement power supply does not have to be energized within five minutes. The only requirement is that the power supply be installed in the chassis in order to energize the fans and maintain proper system cooling.

Step 7 Grasping the power supply handles, pull the power supply from the chassis.

Step 8 Replace the DC power supply within five minutes.

What to do next

This completes the procedure of removing a DC power supply from the Cisco ASR 1013 Router.

Replacing the DC Power Supply in Cisco ASR 1013 Router



Note The color coding of the DC input power supply leads depends on the color coding of the DC power source at your site. Typically, green or green/yellow is used for ground (GND), black is used for –48 V on negative (–) terminal and red is used for RTN on the positive (+) terminal. Make certain the lead color coding you choose for the DC input power supply matches lead color coding used at the DC power source.



Warning When you install the unit, the ground connection must always be made first and disconnected last. Statement 1046

To install the DC power supply, follow these steps:

SUMMARY STEPS

1. Grasp the DC power supply by the two handles and carefully slide it into the chassis. Make sure you align the rear connector to the backplane until it is fully seated.
2. Tighten the captive screws on the power supply.
3. Make certain that the chassis ground is connected before you begin installing the DC power supply.

4. Locate the ground stud on the DC power supply for the **GND** connection which must be installed first and follow these steps:
5. Attach the other end of the ground cable to the site ground associated to the DC power supply system that you are working on.
6. Remove the plastic cover from the terminal block if it is still on.
7. You must wrap the positive and negative power cables with sleeving. Take each wire and cover the area from the lug to the wire with heavy shrink sleeving as pointed out in callout 3 (see xref fig).
8. For easier cable-management, insert the positive cable first. Replace the ground lug with cable in the following order as shown in:
9. Tighten the Kepnut screw (use the screwdriver to tighten the ground screw in the terminal block to a torque of 20+/–2 in-lbs / 2 per.) and repeat the same steps for the negative wires.
10. Use tie wraps to secure the wires, so that the wires are not pulled from the terminal block by casual contact. Ti-wrap studs are located below the power supply terminal block.
11. Replace the terminal block plastic cover, which is slotted and keyed to fit correctly over the terminal block; then tighten the black screw (use the screwdriver to tighten the screw to a torque of 5 in-lbs / 1 per.).
12. Remove the tape from the circuit-breaker On/Off switch (if there was any).
13. Switch the circuit breaker On/Off switch to the On (|) position.

DETAILED STEPS

Step 1 Grasp the DC power supply by the two handles and carefully slide it into the chassis. Make sure you align the rear connector to the backplane until it is fully seated.

Step 2 Tighten the captive screws on the power supply.

Step 3 Make certain that the chassis ground is connected before you begin installing the DC power supply.

Step 4 Locate the ground stud on the DC power supply for the **GND** connection which must be installed first and follow these steps:

a) Using the grounding lug, replace the washers and Kepnut screw in the following order.

- • Flat washer
  • Grounding cable lug
  • Kepnut screw

b) Tighten the Kepnut screws (use the screwdriver to tighten the ground screw to a torque of 20+/–2 in-lbs / 2 per.) on the power supply ground studs.

Step 5 Attach the other end of the ground cable to the site ground associated to the DC power supply system that you are working on.

Step 6 Remove the plastic cover from the terminal block if it is still on.

Caution Before you continue to install the terminal block ground wires, stop and perform Step 7. This is to prevent any contact between the metal power lugs and plastic cover.

Step 7 You must wrap the positive and negative power cables with sleeving. Take each wire and cover the area from the lug to the wire with heavy shrink sleeving as pointed out in callout 3 (see xref fig).

Step 8 For easier cable-management, insert the positive cable first. Replace the ground lug with cable in the following order as shown in:

a) Flat Washer

b) Ground lug with positive wire
c) Kepnut screw

The following figure shows the DC power supply terminal block with the order of installing the screws and washers on the ground lug.

Figure 288: Cisco ASR 1013 Router DC Power Supply Ground Lug Installation

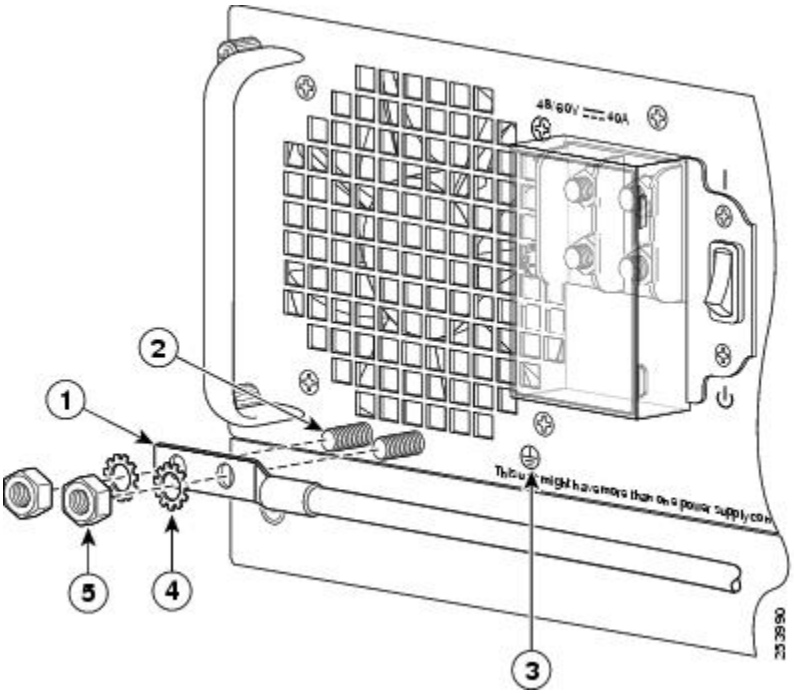

1	DC power supply grounding stud with wire	4	Flat washer
2	Grounding screws	5	Kepnut screw
3	DC power supply ground symbol	—	—

Step 9 Tighten the Kepnut screw (use the screwdriver to tighten the ground screw in the terminal block to a torque of 20+/–2 in-lbs / 2 per.) and repeat the same steps for the negative wires.

Note Secure the wires coming in from the terminal block so that they cannot be disturbed by casual contact.

Step 10 Use tie wraps to secure the wires, so that the wires are not pulled from the terminal block by casual contact. Ti-wrap studs are located below the power supply terminal block.

The following figure shows the DC power supply terminal block with cables connected.

Figure 289: Cisco ASR 1013 Router DC Power Supply Terminal Block Cable Connections

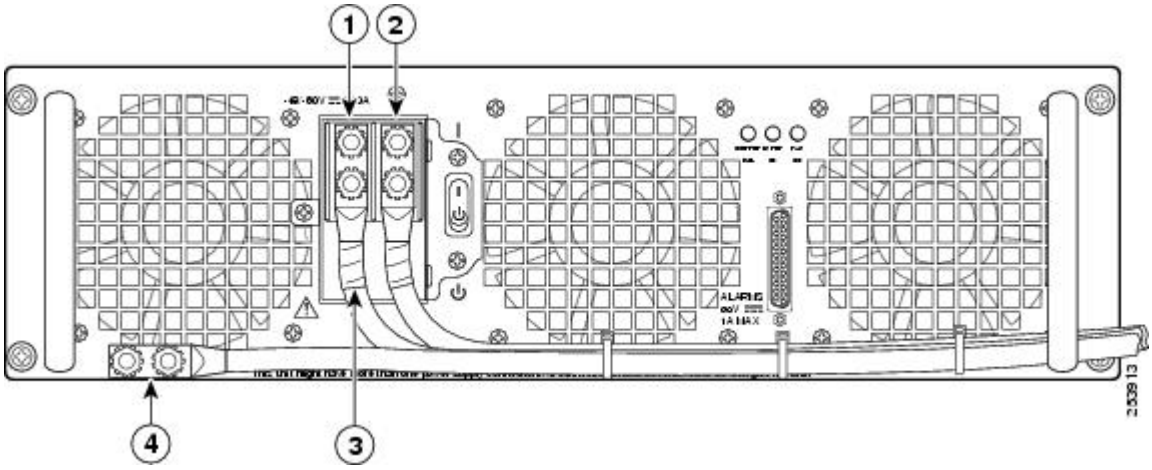

1	Negative lead	3	Protective sleeving around the stud and cable
2	Positive lead	4	Ground stud and cable

Step 11 Replace the terminal block plastic cover, which is slotted and keyed to fit correctly over the terminal block; then tighten the black screw (use the screwdriver to tighten the screw to a torque of 5 in-lbs / 1 per.).

Step 12 Remove the tape from the circuit-breaker On/Off switch (if there was any).

Step 13 Switch the circuit breaker On/Off switch to the On (|) position.

What to do next

Note The requirement for maximum torque applied to the power or ground Kepnuts must be 8 in-lb when the power or ground lug is not present.

This completes the procedure for installing the DC power supply into the Cisco ASR 1013 Router.

Removing and Replacing the Cisco ASR 1001 Router Power Supplies

The Cisco ASR 1001 Router AC and DC power supplies are shipped installed in the chassis. You must connect the power supplies when they arrive.

Note The Cisco ASR 1001 Router can support either two AC or two DC power supplies. Do not mix the AC and DC power supply units in the same chassis.

The following figure shows both the AC and DC power supplies for the Cisco ASR 1001 Router.

Figure 290: Cisco ASR 1001 Router AC Power Supply and DC Power Supply

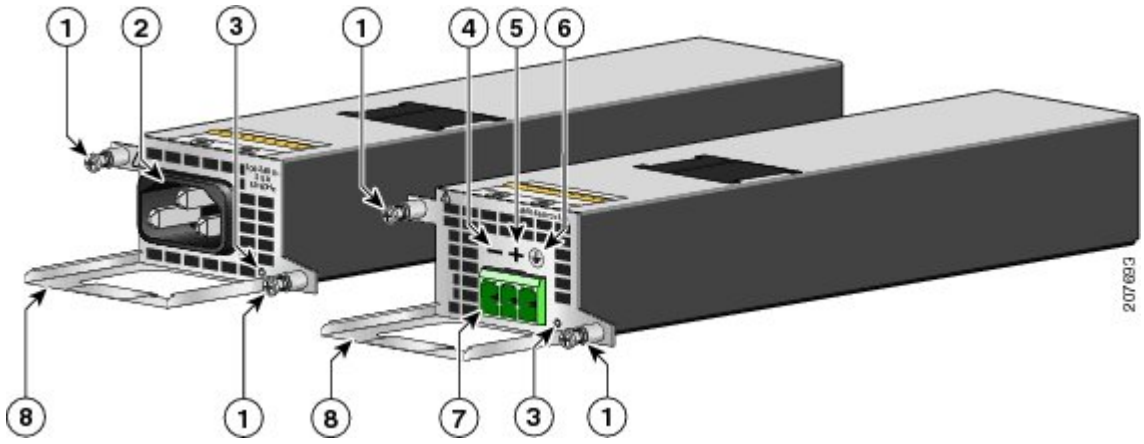

1	AC and DC power supply fasteners	5	DC power supply ground symbol
2	AC power supply inlet	6	DC power supply terminal block connection
3	DC power supply negative (-) connection	7	AC and DC power supply handles
4	DC power supply positive (+) connection	—	—

This section contains the following topics:

Warning The covers are an integral part of the safety design of the product. Do not operate the unit without the covers installed. Statement 1077

Warning When you install the unit, the ground connection must always be made first and disconnected last. Statement 1046

Warning Before performing any of the following procedures, ensure that power is removed from the DC circuit. Statement 1003

Warning Only trained and qualified personnel should be allowed to install, replace, or service this equipment. Statement 1030

Installing the AC Power Supply into Cisco ASR 1001 Router

The Cisco ASR 1001 Router has two AC power supplies at the rear of the chassis. The input receptacle is an IEC60320 C14 type of filtered AC Inlet. The current rating on the connector is 10 A. The following figure shows the ASR 1001 Router AC power supply.

Figure 291: Cisco ASR 1001 Router AC Power Supply



To connect an AC-input power supply to the Cisco ASR 1001 Router, follow these steps:

SUMMARY STEPS

1. There are two power supplies installed. At the rear of the chassis, check whether the power switch on the chassis is in the Standby position.
2. Turn off the circuit breaker to the power supply.
3. For easier installation, plug the power cable into the inlet on power supply slot 1 first.
4. Insert the power supply cable into the power supply in slot 0 on the left.
5. Ensure that the AC power cords are positioned, as shown in the following figure.
6. Plug the AC power supply cables into the AC power source.
7. Turn on the AC breaker.
8. Turn the Standby switch to On (|) on the chassis.
9. The power supply LEDs illuminate green.

DETAILED STEPS

Step 1 There are two power supplies installed. At the rear of the chassis, check whether the power switch on the chassis is in the Standby position.

Warning Do not install the Cisco ASR 1001 Router power supplies without the top cover on the Cisco ASR 1001 chassis.

The following figure shows the Cisco ASR 1001 Router AC power supply standby switch.

Figure 292: Cisco ASR 1001 Router AC Power Supply Standby Switch

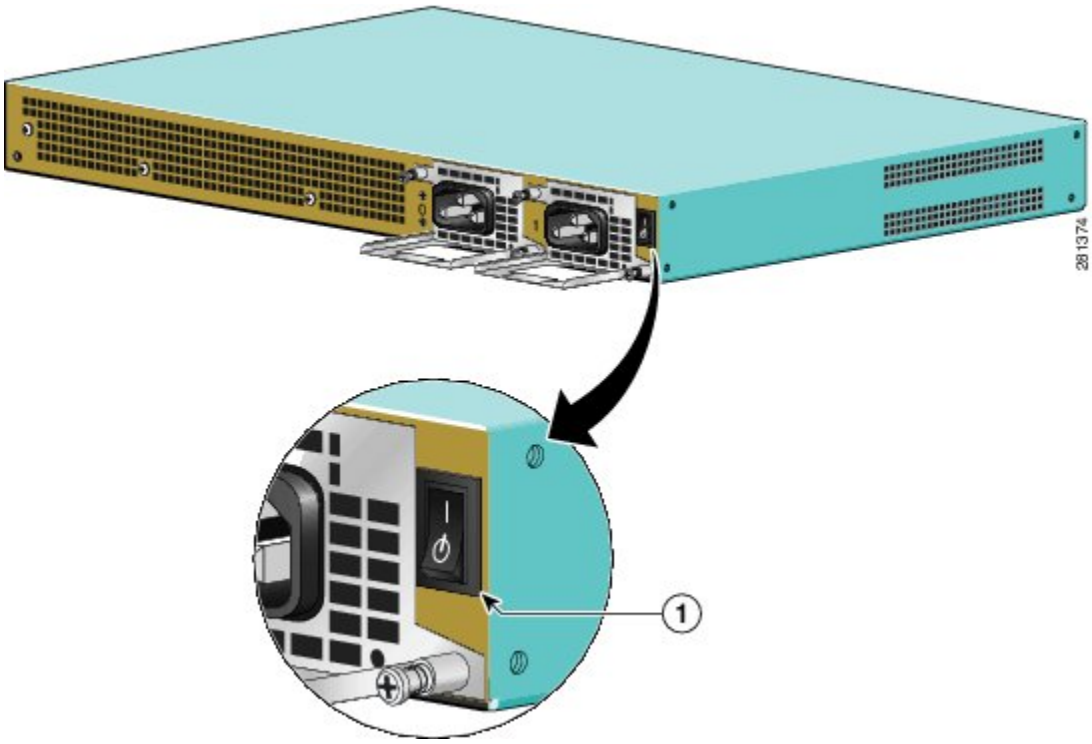

1	Cisco ASR 1001 Router AC power supply Standby switch. This switch does not disconnect power from the power source.

Step 2 Turn off the circuit breaker to the power supply.

Step 3 For easier installation, plug the power cable into the inlet on power supply slot 1 first.

Step 4 Insert the power supply cable into the power supply in slot 0 on the left.

Step 5 Ensure that the AC power cords are positioned, as shown in the following figure.

Figure 293: Correct Position of the Cisco ASR 1001 Router AC Power Supply Cables

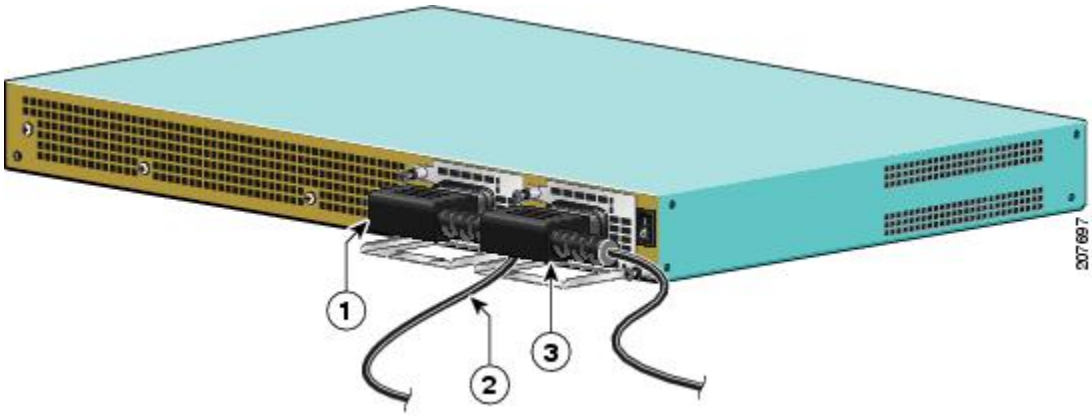

1	AC power supply in PS0	3	AC power supply in PS1

2	Position of power supply cable from PS0	—	—

Step 6 Plug the AC power supply cables into the AC power source.

Step 7 Turn on the AC breaker.

Step 8 Turn the Standby switch to On (|) on the chassis.

Step 9 The power supply LEDs illuminate green.

What to do next

This completes the procedure for connecting AC-input power.

Removing AC Power Supply from the Cisco ASR 1001 Router

This section describes how to remove an AC power supply from the Cisco ASR 1001 Router. The Cisco ASR 1001 Router has two power supply slots, slot 1 next to the Standby switch and power supply slot zero (PS0) to the left. Follow these steps:

SUMMARY STEPS

1. On the rear of the router, turn the power switch to the Standby position.
2. Unplug the power cable from the power source.
3. You must remover the top cover from the chassis before you remove any power supply.
4. To remove the power cord from PS1, you must position the power supply cable in order to access the power supply fasteners. Hold back the power supply cable in PS0, as shown in the following figure making sure not to unplug the power cable.
5. Continue to hold back the power supply cable in PS0, to gain access to the fastener. Unscrew the both fasteners on the power supply in slot 1.
6. Once the power supply fasteners are loosened, grasp the handle with one hand and support the weight of power supply with the other hand and pull the power supply out of the slot (see the following figure).
7. Repeat the same steps to remove the AC power supply from Slot PS0.

DETAILED STEPS

Step 1 On the rear of the router, turn the power switch to the Standby position.

Step 2 Unplug the power cable from the power source.

Step 3 You must remover the top cover from the chassis before you remove any power supply.

Step 4 To remove the power cord from PS1, you must position the power supply cable in order to access the power supply fasteners. Hold back the power supply cable in PS0, as shown in the following figure making sure not to unplug the power cable.

Figure 294: Positioning the AC Power Supply Cable in Slot PS0

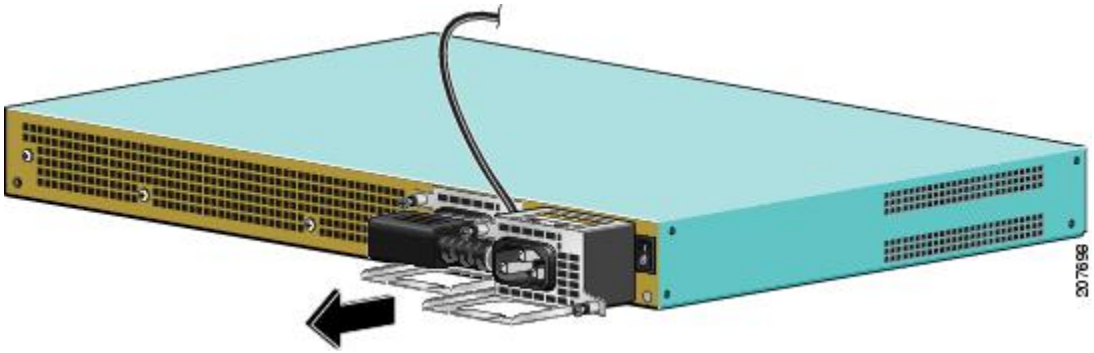

Step 5 Continue to hold back the power supply cable in PS0, to gain access to the fastener. Unscrew the both fasteners on the power supply in slot 1.

Tip The Cisco ASR 1001 power supplies are long and narrow. It is recommended that while you pull the power supply out of the chassis, support the power supply from the bottom with the other hand.

Step 6 Once the power supply fasteners are loosened, grasp the handle with one hand and support the weight of power supply with the other hand and pull the power supply out of the slot (see the following figure).

Figure 295: Removing the Cisco ASR 1001 Router AC Power Supply Cables

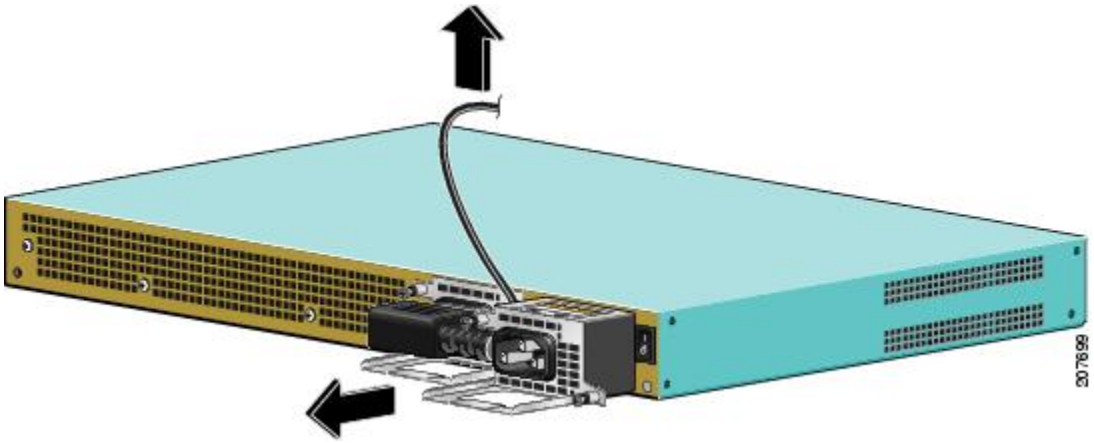

Step 7 Repeat the same steps to remove the AC power supply from Slot PS0.

What to do next

This completes the procedure for removing an AC power supply from the Cisco ASR 1001 Router.

Installing DC Power Supply into Cisco ASR 1001 Router

The Cisco ASR 1001 Router DC input connector is compatible with a pluggable Euro-style plug. The input connector and plug must be UL recognized under UL 486 for field wiring. The connection polarity shall be from left to right: negative (–), positive (+), and ground.

The power supply has a handle, to assist in insertion and extraction. The module must be supported with one hand because of its length. The following figure shows the Cisco ASR 1001 Router DC power supply.

Figure 296: Cisco ASR 1001 Router DC Power Supply Rear View

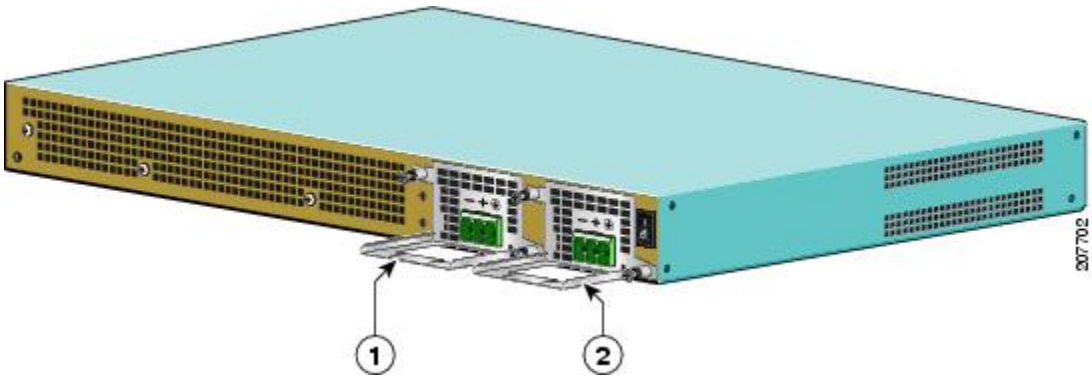

1	DC power supply in slot PS0	2	DC power supply in slot PS1

Note Two types of DC connector plugs are supported for use with the DC power supply for the Cisco ASR 1001 Router. In one type of connector plug, the screw holes are raised above the connector plug body. In the second type, the screw holes are not raised above the connector plug body. xref fig shows the connector plug in which the screw holes are not raised. The only difference in the method for using these two types of connector plugs is related to the wire-strip length, which is mentioned later in this section.

This section describes how to install the DC power supply ground leads and input power leads to the Cisco ASR 1001 Router DC input power supply. Before you begin, read these important notices:

- The color coding of the DC input power supply leads depends on the color coding of the DC power source at your site. Typically, green or green/yellow is used for ground (GND), black is used for –48 V on negative (–) terminal and red is used for RTN on the positive (+) terminal. Make certain the lead color coding you choose for the DC input power supply matches lead color coding used at the DC power source.
- Make certain that the chassis ground is connected on the chassis before you begin installing the DC power supply. Follow the steps in the xref “Attaching a Chassis Ground Connection” section.

Warning When you install a power supply unit, the ground connection should always be made first and disconnected last. Statement 1046

To connect the DC power supply on the Cisco ASR 1001 Router, follow these steps:

SUMMARY STEPS

1. Make certain that the chassis ground is connected on the chassis before you begin installing the DC power supply as shown in the xref “Attaching a Chassis Ground Connection” section.
2. On the rear of the chassis next to the power supply bay PS1 as shown in the figure on page 5, make certain the power supply switch is in Standby position.
3. Turn off the circuit breaker to the power supply.

DETAILED STEPS

Step 1 Make certain that the chassis ground is connected on the chassis before you begin installing the DC power supply as shown in the xref "Attaching a Chassis Ground Connection" section.

Step 2 On the rear of the chassis next to the power supply bay PS1 as shown in the figure on page 5, make certain the power supply switch is in Standby position.

Step 3 Turn off the circuit breaker to the power supply.

Removing DC Input Power from the Cisco ASR 1001 Router

This section describes how to remove a DC power supply from the Cisco ASR 1001 Router. Follow these steps:

SUMMARY STEPS

1. Turn off the circuit breaker.
2. On the rear of the chassis, place the Standby switch in the Standby position (|).
3. Pull the terminal block plug connector out of the terminal block head in the power supply.
4. Unscrew the two power supply fasteners on the unit.
5. Grasping the power supply handle with one hand, pull the power supply out from the chassis, while at the same time, supporting it with the other hand.

DETAILED STEPS

Step 1 Turn off the circuit breaker.

Step 2 On the rear of the chassis, place the Standby switch in the Standby position (|).

Step 3 Pull the terminal block plug connector out of the terminal block head in the power supply.

Step 4 Unscrew the two power supply fasteners on the unit.

Step 5 Grasping the power supply handle with one hand, pull the power supply out from the chassis, while at the same time, supporting it with the other hand.

What to do next

This completes the procedure for removing the DC power supply from the ASR 1001 Router.

Wiring the DC Input Power Source

The Cisco ASR 1001 Router DC power supply has a connector plug that is installed into the power supply terminal block header. The following figure shows a view of a DC power supply with a DC connector plug inserted (no wires installed) into the power supply block header in power supply PS0 (on the left) and the other power supply with no connector plug inserted into power supply PS1 (on the right).

Figure 297: Cisco ASR 1001 Router DC Power Supply Terminal Block With a Connector Plug in Slot PS01 and Without a Plug in PS0

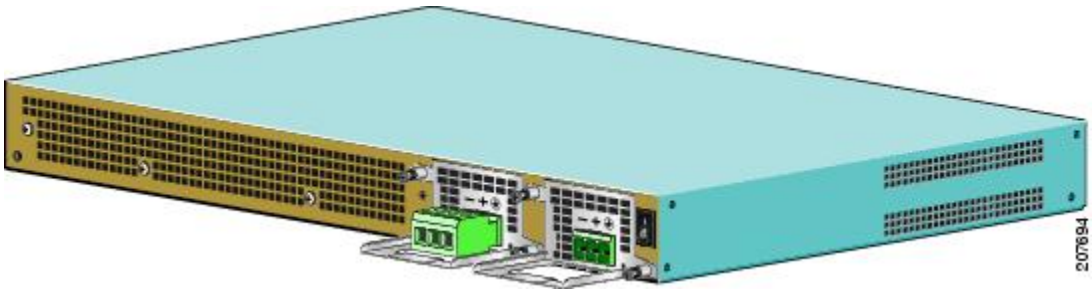

Note The color coding of the DC input power supply leads depends on the color coding of the DC power source at your site. Make certain the lead color coding you choose for the DC input power supply matches lead color coding used at the DC power source.

Warning When installing or replacing the unit, the ground connection must always be made first and disconnected last. Statement 1046

Warning This product relies on the building's installation for short-circuit (overcurrent) protection. Ensure that the protective device is rated not greater than: 120 VAC, 20A U.S. (240 VAC, 10A international). Statement 1005

Warning Before performing any of the following procedures, ensure that power is removed from the DC circuit. Statement 1003

Warning Only trained and qualified personnel should be allowed to install, replace, or service this equipment. Statement 1030

Use the information in this section to wire the DC input power source.

SUMMARY STEPS

1. At the front of the router, make sure the power switch is in the standby (|) position.
2. Move the circuit-breaker switch handle to the off position, and apply tape to hold it in the off position.
3. Gather the DC power supply terminal block plug.
4. Insert the lead wires before inserting the plug into the terminal block header on the DC power supply.
5. Use a 10 gauge wire-stripping tool to strip each of the three wires coming from the DC input power source. If you are using the connector plug with the raised screw holes, strip the wires to 0.39 inch (10 mm) + 0.02 inch (0.5 mm). If you are using the connector plug with the screw holes that are not raised, strip the wires to 0.27 inch (7 mm) + 0.02 inch (0.5 mm). Do not strip more than the recommended

length of wire because doing so could leave the wire exposed from the terminal block plug. The following figure shows a stripped DC input power source wire.

6. Identify the positive, negative, and ground feed positions for the terminal block connection. The recommended wiring sequence is:
7. Insert the exposed wire of one of the ground wire into the terminal block plug. Make sure that you cannot see any wire lead. Only wire with insulation should extend from the terminal block.
8. Use a ratcheting torque screwdriver to torque the terminal block plug captive screw (above the installed wire lead) to from 0.5 Nm (4.425 lbf in. to 0.6 Nm (5.310 lbf in.) as shown in the following figure.
9. Repeat Step 6 through Step 8 for the remaining two DC input power source wires, the positive lead wire and the negative lead wire (see the following figure).
10. Use a tie wrap to secure the wires to the rack, so that the wires are not pulled from the terminal block plug by casual contact. Make sure the tie wrap allows for some slack in the ground wire as shown in the following figure.
11. Make certain the terminal block plug is fully seated in the terminal block header on the DC power supply panel. You will hear a snap or click when installed properly.
12. Remove the tape (if any) from the circuit-breaker switch handle and move the circuit-breaker switch handle to the on position.
13. On the rear of the router, place the power supply Standby switch in the on position (O) to turn on the router.

DETAILED STEPS

Step 1 At the front of the router, make sure the power switch is in the standby (|) position.

Step 2 Move the circuit-breaker switch handle to the off position, and apply tape to hold it in the off position.

Step 3 Gather the DC power supply terminal block plug.

Step 4 Insert the lead wires before inserting the plug into the terminal block header on the DC power supply.

Step 5 Use a 10 gauge wire-stripping tool to strip each of the three wires coming from the DC input power source. If you are using the connector plug with the raised screw holes, strip the wires to 0.39 inch (10 mm) + 0.02 inch (0.5 mm). If you are using the connector plug with the screw holes that are not raised, strip the wires to 0.27 inch (7 mm) + 0.02 inch (0.5 mm). Do not strip more than the recommended length of wire because doing so could leave the wire exposed from the terminal block plug. The following figure shows a stripped DC input power source wire.

Figure 298: Stripping the DC Input Power Source Wire

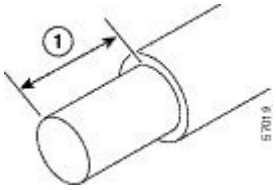

1	0.39 inch (10 mm) is the recommended wire-strip length for the connector plug that has raised screw holes. 0.27 inch (7 mm) is the recommended wire-strip length for the connector plug that does not have raised screw holes.

Warning An exposed wire lead from a DC input power source can conduct harmful levels of electricity. Be sure that no exposed portion of the DC input power source wire extends from the terminal block plug. Statement 122

Step 6 Identify the positive, negative, and ground feed positions for the terminal block connection. The recommended wiring sequence is:

a) Ground lead wire (right)
b) Positive (+) lead wire (middle)
c) Negative (–) lead wire (left)

The following figure shows the DC power supply with lead wires.

Figure 299: DC Power Supply with Lead Wires

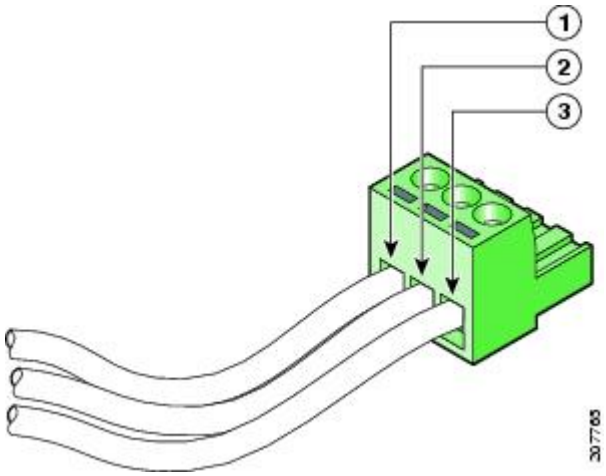

1	Negative (–) lead wire	3	Ground lead wire
2	Positive (+) lead wire	—	—

Step 7 Insert the exposed wire of one of the ground wire into the terminal block plug. Make sure that you cannot see any wire lead. Only wire with insulation should extend from the terminal block.

Caution Do not overtorque the terminal block plug captive screws. The recommended maximum torque is from 0.5 Nm (4.425 lbf in.) to 0.6 Nm (5.310 lbf in.).

Step 8 Use a ratcheting torque screwdriver to torque the terminal block plug captive screw (above the installed wire lead) to from 0.5 Nm (4.425 lbf in. to 0.6 Nm (5.310 lbf in.) as shown in the following figure.

Figure 300: Torquing the DC Power Supply Terminal Block Plug Screws

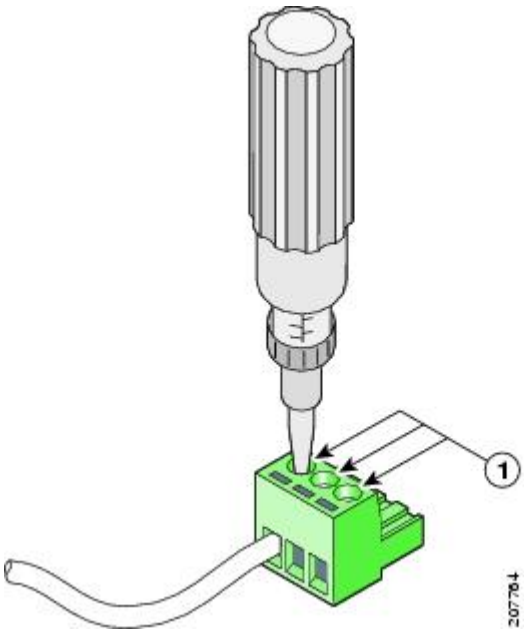

1	Torque is from 0.5 Nm (4.425 lbf in. to 0.6 Nm (5.310 lbf in.)

Step 9 Repeat Step 6 through Step 8 for the remaining two DC input power source wires, the positive lead wire and the negative lead wire (see the following figure).

Figure 301: Inserting the DC Power Supply Terminal Block Plug in the Block Header

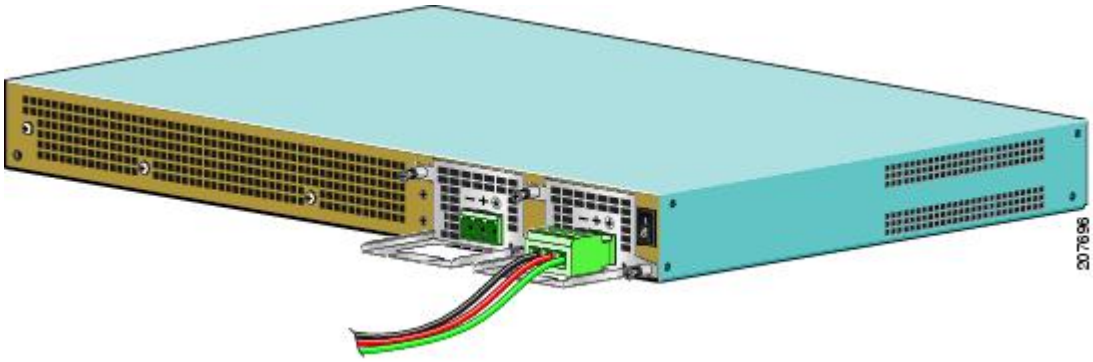

1	DC power supply negative (-) lead wire	3	DC power supply ground lead wire
2	DC power supply positive (+) lead wire	—	—

Caution Secure the wires coming in from the terminal block plug so that they cannot be disturbed by casual contact.

Step 10 Use a tie wrap to secure the wires to the rack, so that the wires are not pulled from the terminal block plug by casual contact. Make sure the tie wrap allows for some slack in the ground wire as shown in the following figure.

Figure 302: Complete DC Terminal Block Plug Insertion and Secure Tie Wrap

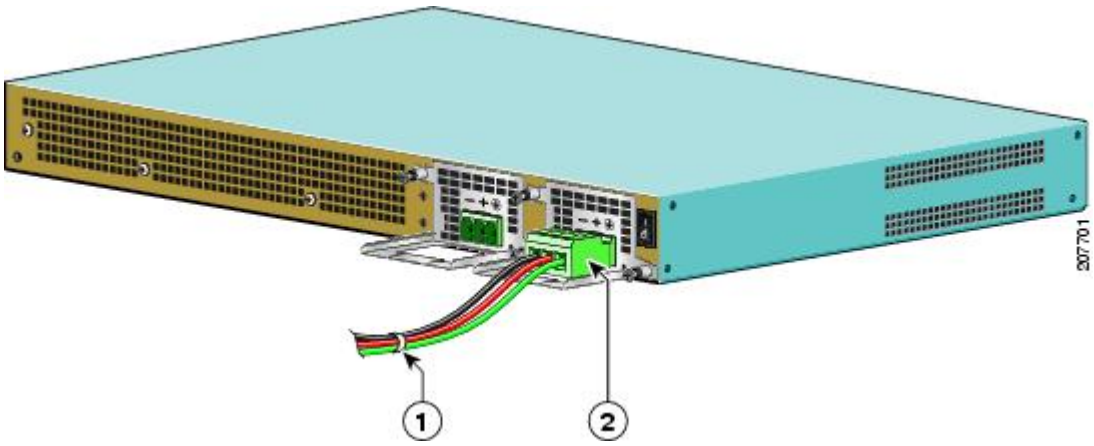

1	Lead wires secured with a tie wrap	2	DC power supply terminal block plug being inserted into terminal block header.

Step 11 Make certain the terminal block plug is fully seated in the terminal block header on the DC power supply panel. You will hear a snap or click when installed properly.

Step 12 Remove the tape (if any) from the circuit-breaker switch handle and move the circuit-breaker switch handle to the on position.

Step 13 On the rear of the router, place the power supply Standby switch in the on position (O) to turn on the router.

The power supply LEDs light when power is supplied to the router.

What to do next

This completes the procedure for connecting the DC power supply in the Cisco ASR 1001 Router.

Repacking the Router

If your system is damaged, you must repack it for return shipment.

Before you return the router or move the router to a different location, follow these instructions to repack the system, using the original packaging material:

SUMMARY STEPS

1. Place the bottom packing material section inside the bottom of the shipping container.
2. Use at least two people to place the Cisco ASR 1000 Series Router inside the container. Be sure that the chassis is positioned correctly before you lower it inside the container.
3. Place the top packing material over the top of the Cisco ASR 1000 Series Router.
4. Place both accessory boxes inside the cutouts in the top section of the packing material.
5. Fold the outside carton down over the top of the accessory boxes and seal with packing tape.

6. Wrap two packaging straps tightly around the top and bottom of the package to hold the outside carton and the bottom pallet.

DETAILED STEPS

Step 1 Place the bottom packing material section inside the bottom of the shipping container.

Step 2 Use at least two people to place the Cisco ASR 1000 Series Router inside the container. Be sure that the chassis is positioned correctly before you lower it inside the container.

Step 3 Place the top packing material over the top of the Cisco ASR 1000 Series Router.

Step 4 Place both accessory boxes inside the cutouts in the top section of the packing material.

Step 5 Fold the outside carton down over the top of the accessory boxes and seal with packing tape.

Step 6 Wrap two packaging straps tightly around the top and bottom of the package to hold the outside carton and the bottom pallet.

Caution Do not use tape to hold the outside carton to the bottom pallet. Packaging straps must be used.

What to do next

This completes the procedure for repacking the shipping container.

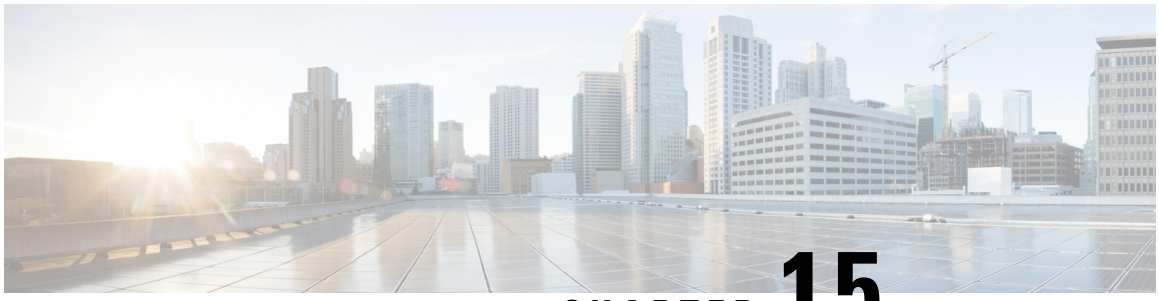

CHAPTER 15

Cisco ASR 1000 Series Router Specifications

This appendix provides router specifications and cable assemblies and pinouts for the cables shipped with the Cisco ASR 1000 Series Aggregation Services Routers.

This appendix contains the following sections:

- Cisco ASR 1001-HX and Cisco ASR 1002-HX Router Specifications, on page 531
- Cisco ASR 1006X and Cisco ASR 1009X Router Specifications, on page 531
- Cisco ASR 1006 Router Specifications, on page 531
- Cisco ASR 1004 Router Specifications, on page 536
- Cisco ASR 1002 Router, Cisco ASR 1002-F Router, and Cisco ASR 1002-X Router Specifications, on page 539
- Cisco ASR 1013 Router Specifications, on page 544
- Cisco ASR 1001 Router Specifications, on page 547

Cisco ASR 1001-HX and Cisco ASR 1002-HX Router Specifications

For information about specifications for Cisco ASR 1001-HX and Cisco ASR 1002-HX Router, see Cisco ASR 1001-HX Router and Cisco ASR 1002-HX Router Hardware Installation Guide.

Cisco ASR 1006X and Cisco ASR 1009X Router Specifications

For information about specifications for Cisco ASR 1006X and Cisco ASR 1009X Router, see Cisco ASR 1009-X Router and Cisco ASR 1006-X Hardware Installation Guide.

Cisco ASR 1006 Router Specifications

This section lists the specifications for the Cisco ASR 1006 Router.

The following table lists the Cisco ASR 1006 Router physical specifications.

Table 97: Cisco ASR 1006 Router Specifications

Description	Specification
Midplane	Connects the Cisco ASR 1000 Series RP1, Cisco ASR 1000 Series ESP, Cisco ASR 1000 Series SPA Interface (SIP), SPAs, and power supplies together in the system
Dimensions (H x W x D)	Height = 10.5 in. (25.4 cm) Width = 17.25 in.(43.815 cm) Depth = 22.50 in. (57.15 cm)
Weight	• Fully loaded chassis: 109.1 pounds (49.5 kg) • Only chassis: 25 pounds (11.33kg) **Note** Using the Cisco ASR1000-ESP100 instead of the Cisco ASR1000-ESP40 adds 2.1 lbs to the total weight of the router.
Nominal operating temperature	• 41° to 104° F • 5° to 40° C
Nominal operating humidity	10% to 85%
Storage temperature	• –38° to 150° F • –40° to 70° C
Power consumption	• Maximum DC: 1700W • Maximum AC: 1600W • Maximum (Out): 1275W

Cisco ASR 1006 Router Memory and Storage Options

The following table lists the hardware memory and storage options supported on the Cisco ASR 1006 Router.

Table 98: Memory and Storage Options for Cisco ASR 1006 Router

Memory Type	Default	Maximum System Support
RP1	2 GB DRAM	4 GBDRAM
eUSB	1 GB (Partitioned: 2x32MB for NVRAM and the remaining for mass storage	Hard disk drive 40 GB for code storage or solid-state drive 32 GB support

Cisco ASR 1006 Router Ethernet RJ-45 Port Pinouts

The Cisco ASR 1006 Router has an RJ-45 port for the 10/100/1000 Ethernet connection. The RJ-45 port supports IEEE 802.3ab (Gigabit Ethernet) and IEEE 802.3u (Fast Ethernet) interfaces compliant with 10BASET, 100BASETX, and 1000BASET specifications.

The RJ-45 port supports standard straight-through and crossover Category 5 UTP cables with RJ-45 connectors. Cisco does not supply Category 5 UTP cables; these cables are available commercially.

The following figure shows an RJ-45 port and connector.

Figure 303: RJ-45 Port and Connector for Cisco ASR 1006 Router

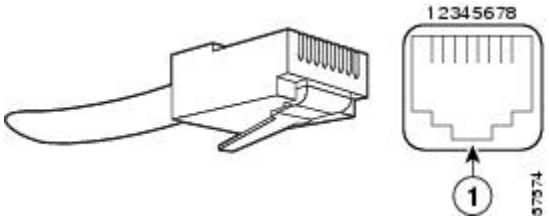

1	RJ-45 connector	—	—

Cisco ASR 1006 Router MGMT Ethernet Port Pinouts

The following table lists the RJ-45 port pinout for the front panel Management Ethernet port.

Table 99: RJ-45 Management Ethernet Port Pinouts

Pin	Signal	Direction	Description
1	TX Data+	Out	Transmit Data
2	TX Data–	Out	Transmit Data
3	RX Data+	In	Receive Data
4, 5	NC	—	—
6	RX Data–	In	Receive Data
7,8	NC	—	—

Cisco ASR 1006 Router BITS Port Signals and Pinouts

The following table lists the pinouts of the Building Integrated Timing Supply (BITS) RJ45 port on the Cisco ASR 1006 Router.

Table 100: BITS RJ-45 Receptacle Pinouts for Cisco ASR1000-RP1

Pin	Signal	Direction	Description
1	RX Ring	Input	Receive Ring
2	RX	Input	Receive (T1/E1)
3, 4	N/C	—	—
5	TX Ring	Unused	—

Pin	Signal	Direction	Description
6	TX	Unused	—
7,8	N/C	—	—

The following table lists the pinouts of the Building Integrated Timing Supply (BITS) and the DOCSIS Timing Interface (DTI) RJ45 port on the Cisco ASR1000-RP2 front panel.

Table 101: BITS RJ-45 Receptacle Pinouts for Cisco ASR1000-RP2

Pin	Signal	Direction	Description
1	RX Ring	Input/Bi (DTI)	Receive Ring/Bidirectional DTI
2	RX TIP	Input/Bi (DTI)	Receive TIP (T1/E1) Bidirectional DTI
3, 4	N/C	—	—
5	TX Ring	Output	Transmit Ring/Bidirectional DTI
6	TX	Output	Transmit TIP (T1/E1) Bidirectional DTI
7,8	N/C	—	—

Cisco ASR 1006 Router Console Port Signals and Pinouts

The following table lists the pinouts of the dual RJ-45 ports for the front panel console port.

Table 102: Console Port Pinouts for Cisco ASR 1006 Router

Pin	Signal	Direction	Description
1	RTS	Out	Request to Send (tied to pin 8, CTS)
2	DTR	Out	Data Terminal Ready (always On)
3	TXD	Out	Transmit Data
4	GND	—	Ring Indicator
5	GND	—	—
6	RXD	In	Receive Data
7	DSR	In	Data Terminal Ready
8	CTS	In	Clear to Send (tied to pin 1, RTS)

Cisco ASR 1006 Router Auxiliary Port Signals and Pinouts

The following table lists the pinouts of the dual RJ-45 ports for the auxiliary port signals.

Table 103: Auxiliary Port Pinouts for Cisco ASR 1006 Router

Pin	Signal	Direction	Description
1	RTS	Out	Request to Send
2	DTR	Out	Data Terminal Ready (always On)
3	TXD	Out	Transmit Data
4	RI	—	Ring Indicator
5	GND	—	—
6	RXD	In	Receive Data
7	DSR/DCD	In	Data Set Ready/Data Carrier Detect
8	CTS	In	Clear to Send

Cisco ASR 1006 Router DB-25 Pinout Assignments for Alarm Relays

The alarm ports for the Cisco ASR 1006 Router (Cisco ASR 1004 Router and Cisco ASR 1013 Router) power supplies reside on the DB-25 connector on the face of the power supply. The alarm ports are relay contact closures that the IOS environmental software controls. The environmental monitoring functions of the system can include voltage and temperature monitoring for the router installed components and failure sensing for power supply fan tray.

Any alarms that light the front panel LEDs on the Cisco ASR1000-RP1 causes a contact closure between the corresponding pins within the DB-25 alarm port of both power supplies. In the DB-25 connector, each alarm consists of a three-pin set containing a common pin, a normally open pin, and a normally closed pin. The connections that describe alarm activity are Alarm off (Common is connected to normally closed and normally open is disconnected) and Alarm on (Common is connected to normally open and normally closed is disconnected).

The following table lists the common, normally open, and normally closed relay contacts accessible to an external alarm monitoring facility by means of the DB-25 connector.

Table 104: Cisco ASR 1006 Router DB-25 Alarm Connector Pinout Assignments

Signal	Description	Common (CM)	Normally Open (NO)	Normally Closed (NC)	SPARE
CRTAA	Critical Audible Alarm	2	1	14	—
MAJAA	Major Audible Alarm	16	3	15	—
MINAA	Minor Audible Alarm	5	4	17	—
CRTVA	Critical Visual Alarm	19	6	18	—
MAJVA	Major Visual Alarm	8	7	20	—
MINVA	Minor Visual Alarm	22	9	21	—

Signal	Description	Common (CM)	Normally Open (NO)	Normally Closed (NC)	SPARE
SPARE	SPARE—unused pin reserved for future use	—	—	—	10, 11, 12, 13, 23, 24, 25

Cisco ASR 1004 Router Specifications

This section lists the specifications for the Cisco ASR 1004 Router.

The following table lists the Cisco ASR 1004 Router physical specifications.

Table 105: Cisco ASR 1004 Router Specifications

Description	Specification
Midplane	Connects the Cisco ASR 1000 Series RP1, ASR 1000 Series ESP, Cisco ASR 1000 Series SPA Interface (SIP), SPAs, and power supplies together in the system
Dimensions (H x W x D)	Height = 7 in. (17.8 cm) (4RU rack-mount per EIA RS-310) Width = 17.25 in. (43.815 cm) (19 inch rack-mount or optional 23 Telco rack- mount) Depth = 22.50 in. (57.15 cm) (including card handles, cable-management brackets and power supply handles)
Weight	• Fully loaded chassis: 50 pounds (22.6796 kg) • Only chassis: 18 pounds (8.16 kg)
Nominal operating temperature	• 41° to 104° F • 5° to 40° C
Nominal operating humidity	10% to 85%
Storage temperature	• –38° to 150° F • –40° to 70° C
Power consumption	• Maximum DC: 1020W • Maximum AC: 960W • Maximum (Out): 765W

Cisco ASR 1004 Router Memory and Storage Options

The following table lists the hardware memory and storage options supported on the Cisco ASR 1004 Router.

Table 106: Memory and Storage Options for Cisco ASR 1004 Router

Memory Type	Default	Maximum System Support
RP1	2 GB DRAM	4 GBDRAM

Memory Type	Default	Maximum System Support
eUSB	1 GB (Partitioned: 2x32MB for NVRAM and the remaining for mass storage	For mass storage: hard disk drive 40 GB or solid-state drive 32Gb support

Cisco ASR 1004 Router Ethernet RJ-45 Port Pinouts

The Cisco ASR 1004 Router has RJ-45 port for the 10/100/1000 Ethernet connection. The RJ-45 port supports IEEE 802.3ab (Gigabit Ethernet) and IEEE 802.3u (Fast Ethernet) interfaces compliant with 10BASET, 100BASETX, and 1000BASET specifications.

The RJ-45 port supports standard straight-through and crossover Category 5 UTP cables with RJ-45 connectors. Cisco does not supply Category 5 UTP cables; these cables are available commercially. See xref Figure A-1 to see an RJ-45 port and connector.

Cisco ASR 1004 Router MGMT Ethernet Port Signals and Pinouts

The following table lists the RJ-45 port pinouts for the front panel Management Ethernet port.

Table 107: RJ-45 Management Ethernet Port Pinouts for the Cisco ASR 1004 Router

Pin	Signal	Direction	Description
1	TX Data+	Output	Transmit Data
2	TX Data–	Output	Transmit Data
3	RX Data+	Input	Receive Data
4, 5	NC	—	—
6	RX Data–	Input	Receive Data
7,8	NC	—	—

Cisco ASR 1004 Router Console Port Signals and Pinouts

The following table lists the pinouts of the dual RJ-45 ports for the front panel console port.

Table 108: Console Port Pinouts for Cisco ASR 1004 Router

Pin	Signal	Direction	Description
1	RTS	Output	Request to Send (tied directly to CTS)
2	DTR	Output	Data Terminal Ready (always On)
3	TXD	Output	Transmit Data
4	GND	—	Ring Indicator

Pin	Signal	Direction	Description
5	GND	—	—
6	RXD	Input	Receive Data
7	DSR	Input	Unused
8	CTS	Input	Clear to Send (tied to RTS)

Cisco ASR 1004 Router Auxiliary Port Signals and Pinouts

The following table lists the pinouts of the dual RJ-45 ports for the auxiliary port signals.

Table 109: Auxiliary Port Pinouts for Cisco ASR 1004 Router

Pin	Signal	Direction	Description
1	RTS	Output	Request to Send
2	DTR	Output	Data Terminal Ready (always On)
3	TXD	Output	Transmit Data
4	RI	—	Ring Indicator
5	GND	—	
6	RXD	Input	Receive Data
7	DSR/DCD	Input	Data Set Ready/Data Carrier Detect
8	CTS	Input	Clear to Send

Cisco ASR 1004 Router BITS Port Signals and Pinouts

The following table lists the pinouts of the front panel Building Integrated Timing Supply (BITS) RJ45 port.

Table 110: BITS RJ-45 Receptacle Pinouts for Cisco ASR 1004 Router

Pin	Signal	Direction	Description
1	RX Ring	Input	Receive Ring
2	RX TIP	Input	Receive TIP (T1/E1)
3, 4	N/C	—	—
5	TX Ring	Unused	—
6	TX TIP	Unused	—

Pin	Signal	Direction	Description
7,8	N/C	—	—

Cisco ASR 1004 Router DB-25 Pinout Assignments for Alarm Relays

The following table lists the common, normally open, and normally closed relay contacts accessible to an external alarm monitoring facility by means of the DB-25 connector.

For more information about the DB-25 alarm connector, see Cisco ASR 1006 Router DB-25 Pinout Assignments for Alarm Relays, on page 535.

Table 111: Cisco ASR 1004 Router DB-25 Alarm Connector Pinout Assignments

Signal	Description	Common (CM)	Normally Open (NO)	Normally Closed (NC)	SPARE
CRTAA	Critical Audible Alarm	2	1	14	—
MAJAA	Major Audible Alarm	16	3	15	—
MINAA	Minor Audible Alarm	5	4	17	—
CRTVA	Critical Visual Alarm	19	6	18	—
MAJVA	Major Visual Alarm	8	7	20	—
MINVA	Minor Visual Alarm	22	9	21	—
SPARE	SPARE—unused pin reserved for future use	—	—	—	10, 11, 12, 13, 23, 24, 25

Cisco ASR 1002 Router, Cisco ASR 1002-F Router, and Cisco ASR 1002-X Router Specifications

This section lists the specifications for the Cisco ASR 1002 Router, Cisco ASR 1002-F Router, and Cisco ASR 1002-X Router.

Note Unless stated otherwise, the specifications for the Cisco ASR 1002-F Router are the same as those for the Cisco ASR 1002 Router except where limited by constrained throughput of 2.5G on the Cisco ASR 1002-F Router.Similarly, most of the specifications for the Cisco ASR 1002-X Router are the same as the specifications for the Cisco ASR 1002 Router. The differences in specifications have been called out at the relevant places in this section. Some of the Cisco ASR 1002-X Router specifications that are covered in this section are for ports that are specific to that router.

The following table lists the Cisco ASR 1002 Router physical specifications.

Table 112: Cisco ASR 1002 Router Specifications

Description	Specification
Midplane	Connects the Cisco integrated ASR1000-RP1, the ASR 1000 ESP5 or ESP10, SPAs, and power supplies together in the system
Dimensions (H x W x D)	Height: 3.5 in. (8.9 cm) Width: 17.25 in. (19-inch rack-mount or optional 23 Telco adaptor brackets) Depth: 22.50 in. (including card handles, cable-management brackets, and power supply handles) for mounting in a 600mm-enclosed cabinet
Weight	• 40 lbs (18.143 kg) for a fully loaded Cisco ASR 1002 Router or Cisco ASR 1002-F Router • 43.35 lbs (19.662 kg) for a fully loaded Cisco ASR 1002-X Router
Nominal operating temperature	• 41° to 104° F • 5° to 40° C
Nominal operating humidity	10% to 85%
Storage temperature	• –38° to 150° F • –40° to 70° C
Power consumption	• Maximum DC: 590W • Maximum AC: 560W • Maximum (Out): 470W

Cisco ASR 1002 Router Mgmt Ethernet RJ-45 Port Pinouts

Note Unless stated otherwise, the specifications for the Cisco ASR 1002-X Router are the same as the Cisco ASR 1002 Router specifications listed in this section.

The Cisco ASR 1002 Router has RJ-45 port for the 10/100/1000 Ethernet connections. The RJ-45 port supports IEEE 802.3ab (Gigabit Ethernet) and IEEE 802.3u (Fast Ethernet) interfaces compliant with 10BASET, 100BASETX, and 1000BASET specifications.

The RJ-45 port supports standard straight-through and crossover Category 5 UTP cables with RJ-45 connectors. Cisco does not supply Category 5 UTP cables; these cables are available commercially.

The following table lists the RJ-45 port pinout for the front panel Management Ethernet port.

Table 113: Management Ethernet 10/100/1000 RJ-45 Port Pinouts for Cisco ASR 1002 Router

Pin	Signal	Direction	Description
1	TX Data+	Output	Transmit Data
2	TX Data–	Output	Transmit Data

Pin	Signal	Direction	Description
3	RX Data+	Input	Receive Data
4, 5	NC	—	—
6	RX Data–	Input	Receive Data
7,8	NC	—	—

Cisco ASR 1002 Router Console Port Signals and Pinouts

Note Unless stated otherwise, the specifications for the Cisco ASR 1002-X Router are the same as the Cisco ASR 1002 Router specifications listed in this section.

The following table lists the pinout of the dual RJ-45 ports for the front panel console port.

Table 114: Console Port Pinouts for Cisco ASR 1002 Router

Pin	Signal	Direction	Description
1	RTS	Output	Request to Send (tied to CTS)
2	DTR	Output	Data Terminal Ready (always On)
3	TXD	Output	Transmit Data
4	GND	—	Ring Indicator
5	GND	—	—
6	RXD	Input	Receive Data
7	DSR	Input	unused
8	CTS	Input	Clear to Send (tied to RTS)

Cisco ASR 1002 Router Auxiliary Port Signals and Pinouts

Note Unless stated otherwise, the specifications for the Cisco ASR 1002-X Router are the same as the Cisco ASR 1002 Router specifications listed in this section.

The following table lists the pinout of the dual RJ-45 ports for the auxiliary port signals.

Table 115: Auxiliary Port Pinouts for Cisco ASR 1002 Router

Pin	Signal	Direction	Description
1	RTS	Output	Request to Send
2	DTR	Output	Data Terminal Ready (always On)
3	TXD	Output	Transmit Data
4	RI	—	Ring Indicator
5	GND	—	—
6	RXD	Input	Receive Data
7	DSR/DCD	Input	Data Set Ready/Data Carrier Detect
8	CTS	Input	Clear to Send

Cisco ASR 1002 Router BITS Port Signals and Pinouts

The following table lists the pinout of the front panel Building Integrated Timing Supply (BITS) RJ45 port.

Table 116: BITS RJ-45 Interface Pinouts for Cisco ASR 1002 Router

Pin	Signal	Direction	Description
1	RX Ring	Input	Receive Ring
2	RX TIP	Input	Receive TIP (T1/E1)
3, 4	N/C	—	Not used
5	TX Ring	—	Not used
6	TX TIP	—	Not used
7,8	N/C	—	—

Cisco ASR 1002-X Router BITS Port Signals and Pinouts

The following table lists the pinout of the front panel Building Integrated Timing Supply (BITS) RJ45 port on the Cisco ASR 1002-X Router.

Table 117: BITS RJ-45 Interface Pinouts for Cisco ASR 1002-X Router

Pin	Signal	Direction	Description
1	RX Ring	Input	Receive Ring
2	RX TIP	Input	Receive TIP (T1/E1)

Pin	Signal	Direction	Description
3, 4	N/C	—	Not used
5	TX Ring	Output	Transmit Ring
6	TX TIP	Output	Transmit TIP (T1/E1)
7,8	N/C	—	—

Cisco ASR 1002-X Router BNC GPS Ports

The following table describes the BNC GPS ports on the Cisco ASR 1002-X.

Table 118: GPS Port Pinout

Signal Attribute	10 Mhz (input and output)	1PPS (input and output)
Waveform	Input—Sine wave Output—Square wave	Input—Pulse shape Output—Pulse shape
Amplitude	Input— > 1.7 volt p-p(+8 to +10 dBm) Output— > 2.4 volts TTL compatible	Input— > 2.4 volts TTL compatible Output— > 2.4 volts TTL compatible
Impedance	50 ohms	50 ohms
Pulse Width	50% duty cycle	26 microseconds
Rise Time	Input—AC coupled Output—5 nanoseconds	40 nanoseconds

Cisco ASR 1002-X Router Time of Day Port Pinout

The following table summarizes the pinout of the ToD/1PPS port pinout on the Cisco ASR 1002-X.

Table 119: RJ45 1PPS/ToD Port Pinout

Pin	Signal Name	Direction	Description
1	1PPS_P	Output or Input	1PPS RS422 signal
2	1PPS_N	Output or Input	1PPS RS422 signal
3	RESERVED	Output	Do not use this pin.
4	GND		
5	GND		Time of Day character
6	RESERVED	Input	Do not use this pin.

Pin	Signal Name	Direction	Description
7	TOD_P	Output or Input	Time of Day character
8	TOD_N	Output or Input	Time of Day character

Cisco ASR 1013 Router Specifications

This section lists the specifications for the Cisco ASR 1013 Router. The following table lists the Cisco ASR 1013 Router physical specifications.

Table 120: Cisco ASR 1013 Router Specifications

Description	Specification
Midplane	Connects Cisco ASR1000-RP2, Cisco ASR 1000-ESP40 or Cisco ASR 1000-ESP100, Cisco ASR1000-SIP10 and Cisco ASR1000-SIP40, and power supplies together in the system
Dimensions (H x W x D)	Height: 22.8 in. (579.1 cm) Width: 17.2 in. (437.4 cm) Depth: 22 in (558.8 cm) with cable-management bracket and power supply handles included

Weight	• 184.0 lb (83.46 kg) (with redundant AC power supply, SPA and route processor and SIP blank covers, two embedded services processors, two route processors, six SIPs, and no SPAs)
	• 190.60 pounds (loaded with DC power supplies) (86.45 kg)
	• Total with estimated superslot weights with:
	  • AC power supplies—202 pounds (91.62 kg)
	  • DC power supplies —208.60 (94.61 kg)
	Note Using the Cisco ASR1000-ESP100 instead of the Cisco ASR1000-ESP40 adds 2.1 lbs to the total weight of the router.

Nominal operating temperature	5° to 40° C
Nominal operating humidity	10% to 85%
Storage temperature	• –38° to 150° F • –40° to 70° C
Power consumption (2x Zones)	• Maximum input (DC): 4,200W • Maximum input (AC – High Line): 4,000 W • Maximum output (DC and AC – High Line): 3,390 W
Per Power Supply Power Consumption	• Maximum input (DC): 2100W • Maximum input (AC – High Line): 2,000WMaximum input (AC – Low Line): 1,760W • Maximum output (DC and AC – High Line): 1,695W • Maximum output (AC – Low Line): 1,415W

Cisco ASR 1013 Router Memory and Storage Options

The following table lists the hardware memory and storage options supported on the Cisco ASR 1013 Router.

Table 121: Memory and Storage Options for Cisco ASR 1013 Router

Memory Type	Default	Maximum System Support
R21– DRAM	8 GB	8 GB
FECP – DRAM	1 GB for ASR1000-ESP-5 2 GB for ASR1000-ESP10	2 GB
eUSB – Internal Flash + NVRAM	8 GB on the integrated RP on the Cisco ASR 1002 Router (partitioned: 1 GB for bootflash; 7 GB for mass storage)	8 GB – Not Field Upgradeable

Cisco ASR 1013 Router Ethernet RJ-45 Port Pinouts

The Cisco ASR 1013 Router has RJ-45 port for the 10/100/1000 Ethernet connections. The RJ-45 port supports IEEE 802.3ab (Gigabit Ethernet) and IEEE 802.3u (Fast Ethernet) interfaces compliant with 10BASET, 100BASETX, and 1000BASET specifications.

The RJ-45 port supports standard straight-through and crossover Category 5 UTP cables with RJ-45 connectors. Cisco does not supply Category 5 UTP cables; these cables are available commercially.

Cisco ASR 1013 Router MGMT Ethernet Port Signals and Pinouts

The following table lists the RJ-45 port pinout for the front panel Management Ethernet port.

Table 122: Management Ethernet 10/100/1000 RJ-45 Port Pinouts for Cisco ASR 1013 Router

Pin	Signal	Direction	Description
1	TX Data+	Output	Transmit Data
2	TX Data–	Output	Transmit Data
3	RX Data+	Input	Receive Data
4, 5	NC	—	—
6	RX Data–	Input	Receive Data
7,8	NC	—	—

Cisco ASR 1013 Router Console Port Signals and Pinouts

The following table lists the pinouts of the dual RJ-45 ports for the front panel console port.

Table 123: Console Port Pinouts for Cisco ASR 1013 Router

Pin	Signal	Direction	Description
1	RTS	Output	Request to Send (tied to CTS)
2	DTR	Output	Data Terminal Ready (always On)
3	TXD	Output	Transmit Data
4	GND	—	Ring Indicator
5	GND	—	—
6	RXD	Input	Receive Data
7	DSR	Input	unused
8	CTS	Input	Clear to Send (tied to RTS)

Cisco ASR 1013 Router Auxiliary Port Signals and Pinouts

The following table lists the pinouts of the dual RJ-45 ports for the auxiliary port signals.

Table 124: Auxiliary Port Pinouts for Cisco ASR 1013 Router

Pin	Signal	Direction	Description
1	RTS	Output	Request to Send
2	DTR	Output	Data Terminal Ready (always On)
3	TXD	Output	Transmit Data
4	RI	—	Ring Indicator
5	GND	—	—
6	RXD	Input	Receive Data
7	DSR/DCD	Input	Data Set Ready/Data Carrier Detect
8	CTS	Input	Clear to Send

Cisco ASR 1013 Router BITS Port Signals and Pinouts

The following table lists the pinouts of the front panel Building Integrated Timing Supply (BITS) RJ45 port.

Table 125: BITS RJ-45 Interface Pinouts for Cisco ASR 1013 Router

Pin	Signal	Direction	Description
1	RX Ring	Input	Receive Ring

Pin	Signal	Direction	Description
2	RX TIP	Input	Receive TIP (T1/E1)
3, 4	N/C	—	—
5	TX Ring	Unused	—
6	TX TIP	Unused	—
7,8	N/C	—	—

Cisco ASR 1013 Router DB-25 Pinout Assignments for Alarm Relays

The following table lists the common, normally open, and normally closed relay contacts accessible to an external alarm monitoring facility by means of the DB-25 connector.

For more information about the DB-25 alarm connector, see xref c_Cisco_ASR_1006_Router_DB-25_Pinout_Assignments_for_Alarm_Relays_1018881.xml.

Table 126: Cisco ASR 1013 Router DB-25 Alarm Connector Pinout Assignments

Signal	Description	Common (CM)	Normally Open (NO)	Normally Closed (NC)	SPARE
CRTAA	Critical Audible Alarm	2	1	14	—
MAJAA	Major Audible Alarm	16	3	15	—
MINAA	Minor Audible Alarm	5	4	17	—
CRTVA	Critical Visual Alarm	19	6	18	—
MAJVA	Major Visual Alarm	8	7	20	—
MINVA	Minor Visual Alarm	22	9	21	—
SPARE	SPARE—unused pin reserved for future use	—	—	—	10, 11, 12, 13, 23, 24, 25

Cisco ASR 1001 Router Specifications

This section lists the specifications for the Cisco ASR 1001 Router. The following table lists the Cisco ASR 1001 Router physical specifications.

Note The Cisco ASR 1001 Router has the route processor, embedded services processor, and SIP integrated in the chassis.

Table 127: Cisco ASR 1001 Router Specifications

Description	Specification
Dimensions (H x W x D)	Height: 1.71 in. (43.43 mm) Width: 17.3 in. (439.42 mm) Depth: 22.50 in. (571.5 mm) including card handles, cable-management brackets, and power supply handles)
Weight	• 23.30 lb (10.6 kg) (with dual AC power and integrated daughter card) • 22.70 lb (10.3 kg) (with dual DC power and integrated daughter card) • 25 lb fully loaded
Operating temperature	Nominal 5° to 40° C
Nominal operating humidity	10% to 90% non-condensing
Storage temperature	• –38° to 150° F • –40° to 70° C
Power consumption	• Maximum (DC): 500 W • Maximum (AC): 471 W • Maximum (Out): 400 W

Cisco ASR 1001 Router Memory and Storage Options

The following table lists the hardware memory and storage options supported on the Cisco ASR 1001 Router.

Table 128: Memory and Storage Options for Cisco ASR 1001 Router

Memory Type	Default	Maximum System Support
ESP	1 GB DRAM default	1 GB DRAM maximum
Route Processor	• Cisco ASR 1001 Route Processor comes with 4 GB DRAM (default) • Cisco ASR 1001 offers 8 GB Embedded USB memory (EUSB) support (partitioned: two 32-MB for nonvolatile RAM [NVRAM] and the rest for mass storage)	16 GB DRAM maximum
External USB flash memory	1 GB USB flash memory support	—

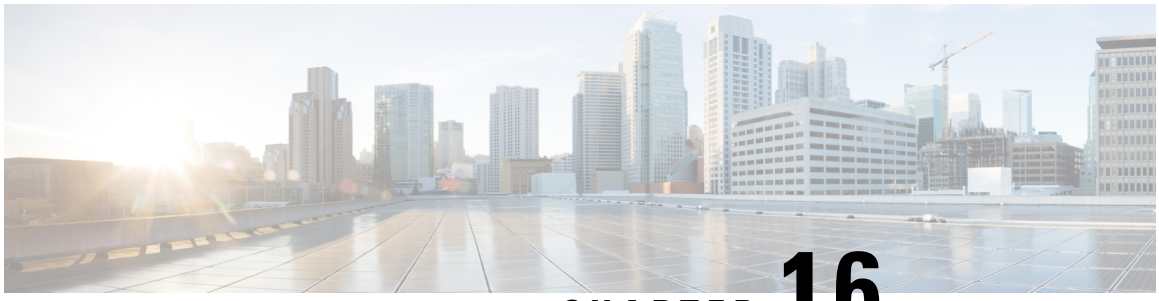

CHAPTER 16

Cisco ASR 1000 Series Router Route Processor and Embedded Services Processor Signals and Pinouts

This appendix contains the following sections:

- Cisco ASR 1000-RP1 Pinout Specifications, on page 549
- Cisco ASR1000-RP2 Pinout Specifications, on page 551
- Cisco ASR1000-ESP40 Console Port Pinout Specifications, on page 553
- Cisco ASR1000-ESP100 Console Port Pinout Specifications, on page 553
- Cisco ASR1000-ESP200 Console Port Pinout Specifications, on page 554

Cisco ASR 1000-RP1 Pinout Specifications

The following tables list the pinouts for the ports on the Cisco ASR1000-RP1.

MGMT Ethernet Port Signals and Pinouts

The following table lists the Management Ethernet 10/100 RJ-45 port pinouts.

Table 129: RJ-45 Management Ethernet Port Pinouts

Pin	Signal	Direction	Description
1	TX Data+	Output	Transmit Data
2	TX Data–	Output	Transmit Data
3	RX Data+	Iputn	Receive Data
4, 5	NC	—	—
6	RX Data–	Input	Receive Data
7,8	NC	—	—

BITS Interface Port Signals and Pinouts

The following table lists the pinouts of the Building Integrated Timing Supply (BITS) RJ45 port.

Table 130: BITS RJ-45 Receptacle Pinouts for Cisco ASR1000-RP1

Pin	Signal	Direction	Description
1	RX Ring	Input	Receive Ring
2	RX TIP	Input	Receive (T1/E1)
3, 4	N/C	—	—
5	TX Ring	Unused	—
6	TX TIP	Unused	—
7,8	N/C	—	—

Console Port Signals and Pinouts

The following table lists the pinouts of the dual RJ-45 ports for the front panel console port.

Table 131: Console Port Pinouts for Cisco ASR1000-RP1

Pin	Signal	Direction	Description
1	RTS	Output	Request to Send (tied to pin 8, CTS)
2	DTR	Output	Data Terminal Ready (always On)
3	TXD	Output	Transmit Data
4	GND	—	Ring Indicator
5	GND	—	—
6	RXD	Input	Receive Data
7	DSR	Input	unused
8	CTS	Input	Clear to Send (tied to pin 1, RTS)

Auxiliary Port Signals and Pinouts

The following table lists the pinouts of the dual RJ-45 ports for the auxiliary port.

Table 132: Auxiliary Port Pinouts for Cisco ASR1000-RP1

Pin	Signal	Direction	Description
1	RTS	Output	Request to Send
2	DTR	Output	Data Terminal Ready (always On)
3	TXD	Output	Transmit Data
4	RI	—	Ring Indicator
5	GND	—	—
6	RXD	Input	Receive Data
7	DSR/DCD	Input	Data Set Ready/Data Carrier Detect
8	CTS	Input	Clear to Send

Cisco ASR1000-RP2 Pinout Specifications

The following tables list the pinouts for the ports on the Cisco ASR1000-RP2.

MGMT Ethernet Port Pinouts

The following table lists the RJ-45 port pinouts for the front panel Management Ethernet 10/100/1000 RJ-45 port.

Table 133: RJ-45 Management Ethernet Port Pinouts

Pin	Signal	Direction	Description
1	Bi Data A+	Bi	Bidirectional Data
2	Bi Data A–	Bi	Bidirectional Data
3	Bi Data B+	Bi	Bidirectional Data
4	Bi Data C+	Bi	Bidirectional Data
5	Bi Data C–	Bi	Bidirectional Data
6	Bi Data B–	Bi	Bidirectional Data
7	Bi Data D+	Bi	Bidirectional Data
8	Bi Data D–	Bi	Bidirectional Data

BITS/DTI Interface Port Signals and Pinouts

The following table lists the pinouts of the front panel BITS/DTI RJ45 port.

Table 134: BITS/DTI RJ-45 Receptacle Pinouts for Cisco ASR1000-RP2

Pin	Signal	Direction	Description
1	RX Ring	Input/Bi (DTI)	Receive Ring/Bidirectional (DTI)
2	RX TIP	Input/Bi (DTI)	Receive TIP (T1/E1)/Bidirectional (DTI)
3, 4	N/C	—	—
5	TX Ring	Output	Transmit Ring / unused for DTI
6	TX TIP	Output	Transmit TIP/ unused for DTI
7,8	N/C	—	—

Console Port Signals and Pinouts

The following table lists the pinouts of the dual RJ-45 ports for the front panel console port.

Table 135: Console Port Pinouts

Pin	Signal	Direction	Description
1	RTS	Output	Request to Send (tied to pin 8, CTS)
2	DTR	Output	Data Terminal Ready (always On)
3	TXD	Output	Transmit Data
4	RI	Input	Ring Indicator
5	GND	—	—
6	RXD	Input	Receive Data
7	DSR/DCD	Input	Data Setl Ready/Data Carrier detect
8	CTS	Input	Clear to Send

Auxiliary Port Signals and Pinouts

The following table lists the pinouts of the dual RJ-45 ports for the auxiliary port signals.

Table 136: Auxiliary Port Pinouts

Pin	Signal	Direction	Description
1	RTS	Out	Request to Send
2	DTR	Out	Data Terminal Ready (Always On)
3	TXD	Out	Transmit Data
4	RI	—	Ring Indicator
5	GND	—	—
6	RXD	In	Receive Data
7	DSR/DCD	In	Data Set Ready/Data Carrier Detect
8	CTS	In	Clear to Send

Cisco ASR1000-ESP40 Console Port Pinout Specifications

Cisco ASR1000-ESP40 provides a debug console on a 10-pin header. The following table lists the console port pinouts for Cisco ASR1000-ESP40.

Table 137: Console Port Pinout for Cisco ASR1000-ESP40

Pin	Signal	Direction	Description
1	—	—	Not Connected
2	DSR	In	Unused
3	RXD	In	Receive Data
4	RTS	In	Request to send, tied to CTS
5	TXD	Out	Transmit data
6	CTS	Out	Clear to Send, tied to RTS
7	DTR	Out	Data Terminal Ready (Always On)
8	—	—	Not Connected
9	GND	Ground	Ground

Cisco ASR1000-ESP100 Console Port Pinout Specifications

Cisco ASR1000-ESP100 provides a debug console on an 8-pin header. The following table lists the console port pinouts for Cisco ASR1000-ESP100.

Table 138: Console Port Pinout for Cisco ASR1000-ESP100

Pin	Signal	Direction	Description
1	RTS	IN	Request to send, tied to CTS
2	DTR	OUT	Unused
3	TXD	OUT	Transmit data
4	GND	Ground	Ground
5	GND	Ground	Ground
6	RXD	IN	Receive data
7	DSR	IN	Unused
8	CTS	OUT	Clear to send, tied to RTS

Cisco ASR1000-ESP200 Console Port Pinout Specifications

Cisco ASR1000-ESP200 provides a debug console on an 8-pin header. The following table lists the console port pinouts for Cisco ASR1000-ESP200.

Table 139: Console Port Pinout for Cisco ASR1000-ESP200

Pin	Signal	Direction	Description
1	RTS	IN	Request to send, tied to CTS
2	DTR	OUT	Unused
3	TXD	OUT	Transmit data
4	GND	Ground	Ground
5	GND	Ground	Ground
6	RXD	IN	Receive data
7	DSR	IN	Unused
8	CTS	OUT	Clear to send, tied to RTS

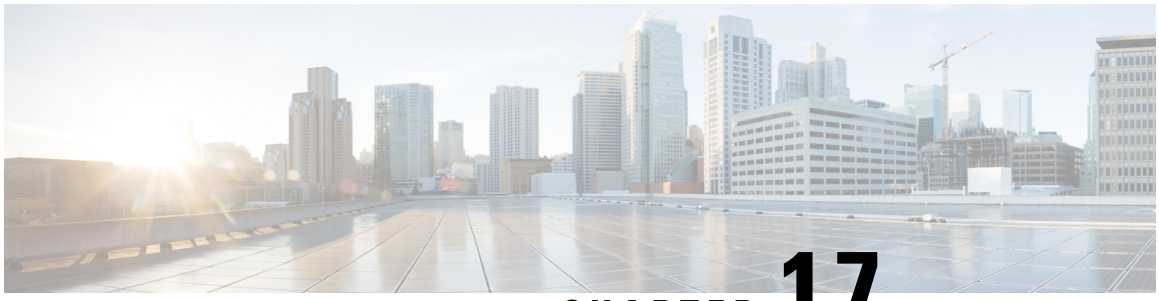

CHAPTER 17

Troubleshooting Initial Startup Problems

Your Cisco ASR 1000 Series Router went through extensive testing before leaving the factory. However, if you encounter problems starting the router, use the information in this chapter to help isolate the cause of the problems. This chapter contains the following sections:

The procedures in this chapter assume that you are troubleshooting the initial system startup and that your router is in the original factory configuration.

If you have removed or replaced components or changed any default settings, the recommendations in this chapter might not apply. Make sure to review the safety warnings listed in the Regulatory Compliance and Safety Information for the Cisco ASR 1000 Series Aggregation Services Routers publication that accompanied your Cisco ASR 1000 Series Router before using the troubleshooting procedures in this chapter.

Note For operations and maintenance information, such as checking the LEDs, checking status using show commands, what to do when installation is not successful, that is specific to the Cisco ASR 1000 Series Aggregation Services Routers, see Cisco ASR 1000 Series Aggregation Services Routers Operations and Maintenance Guide .

- Troubleshooting Overview , on page 555
- Online Troubleshooting Resources, on page 556
- General Troubleshooting Tips, on page 556
- Troubleshooting the Upgrade, on page 560
- Replacing or Recovering a Lost Password, on page 564

Troubleshooting Overview

This section describes the methods used in troubleshooting the router. The troubleshooting methods are organized according to the major subsystems in the router.

If you are unable to solve a problem on your own, you can contact a Cisco customer service representative for assistance. When you call, have the following information ready:

- Date you received the router and the chassis serial number (label located on the chassis, see xref “Serial Number Label Location” section.
- Installed SPAs.
  - Use the **show platform** command to determine which SPAs are installed if possible.

- Cisco software release number.
  - Use the **show version** command to determine this information if possible.
- Brief description of the symptoms and steps you have taken to isolate and solve the issue.
- Maintenance agreement or warranty information.

Online Troubleshooting Resources

In addition to following the subsystems approach to troubleshooting, a variety of online troubleshooting resources are available.

- Cisco ASR 1000 Series Aggregation Services Routers Troubleshooting Guide contains information to help you troubleshoot problems with the Cisco ASR 1000 Series Router.
- Cisco.com registered users can access various troubleshooting tools such as Software Advisor, Cisco IOS Error Message Decoder Tool, and Output Interpreter Tool after logging in at http://www.cisco.com/en/US/support/tsd_most_requested_tools.html.

General Troubleshooting Tips

The following table lists general troubleshooting tips.

Note You must always have two power supplies installed on the Cisco ASR 1000 Series Routers to ensure sufficient cooling for the box. The system fans are inside the power supply and must spin for cooling. Since all the system fans can be powered by one power supply, it is not required for the second power supply to be powered on, but it must be installed.

Table 140: General Startup Troubleshooting Tips

Symptom	Corrective Action
System fails to power on	Check that: • All power cords are properly connected to the Cisco ASR 1000 Series Router and at the power connection end. • The power switch is in the | ON position.
System fails to boot up properly	If your system has power, check the STATUS LED on the ASR 1000 Series route processor and make certain all connections are secure. See Table 2-8 for more information about the LEDs.
Power problems	If the two power supplies are both showing GREEN on their Output LEDs, then a failure of one power supply will not result in a system failure. Only one operating power supply is required for the Cisco ASR 1000 Series Router system to operate. Having only one supply powered is a supported configuration. If both supplies have an OUTPUT FAIL LED red, then the system will fail.

Troubleshooting Using a Subsystem Approach

To solve a system problem, try to isolate the problem to a specific subsystem. Compare current router behavior with expected router behavior. Because a startup issue is usually attributable to one component, it is most efficient to examine each subsystem, rather than trying to troubleshoot each router component.

For troubleshooting purposes in this chapter, the router consists of the following subsystems:

- Power subsystem—Includes the following components:

AC input or DC input power supplies, also called power entry modules (PEMs).

- Processor subsystem—The Cisco ASR 1000 series RP, ESPs, and SIPs have onboard processors. The RP downloads software to each board in the system over the Ethernet Out of Band Channel (EOBC). There is a status LED on each board (RP, ESP, SIP) that indicates the progress of loading software. Note that on routers such as the Cisco ASR 1001 Router and the Cisco ASR 1002-X Router that have an integrated route processor, embedded services processor, and SIP, there is a single status LED to show the loading status of the system. The LED is red if ROMMON does not boot. If the board has booted ROMMON successfully, the LED is yellow. If operation software (IOS) has downloaded successfully, the LED is green.
- Cooling subsystem—Consists of three fans in each of the Cisco ASR 1006 Router and Cisco ASR 1004 Router power supplies and two fans in each of the Cisco ASR 1002 Router, Cisco ASR 1002-F Router, and Cisco ASR 1002-X Router power supplies. On the Cisco ASR 1001 Router, each PEM has its own fan and the system itself has a separate fan tray. The fans draw in air from each of the chassis and PEMs in a front to back direction.

Normal Router Startup Sequence

You can generally determine when and where the power supply failed during the startup sequence by checking the status LEDs on the power supply modules.

In a normal router startup sequence, the following sequence of events and conditions occur:

1. The fan in each PEM receives power and begins drawing air through the power supply. The power supply PWR OK indicator is on and reflects power supply status.
2. As the power on and boot process progresses for the Cisco ASR 1000 Series RPs, ASR 1000 ESPs, and each installed SIP, the status of each card is indicated by LEDs. On routers that have an integrated route processor, embedded services processor, and SIP, the status LED shows the status of the process.

Troubleshooting the Power Subsystem

Use the information in the following table to isolate problems with the power system.

Table 141: Troubleshooting the Power System

Symptom	Possible Cause	Possible Solution
System begins power on	System has failed to boot.	There is a power fault in the chassis. The status LED stays amber during the entire boot process and then turns green when the software has completely booted.

Symptom	Possible Cause	Possible Solution
System does not power on.	AC power cable not fully seated at system or at the wall outlet (power source).	Turn the router power switch to the standby position (|) and reseat the AC power cable at the system or at the wall outlet (power source).
	DC power cable not turned on at the panel board of the circuit breaker.	Turn the router power switch to the standby position (|) and locate the circuit breaker on the panel board that services the DC circuit; switch the circuit breaker to the on position.
	AC internal power cables are not fully seated from the power supply	Turn the router power switch to the standby position (|) and remove and reinsert the power supply cable.
System does not power on.	DC internal power cables are not fully seated on the terminal block.	Check that all ground cables are properly seated in the terminal block on the DC power supply.
	Power source is faulty.	Turn the power source switch off, connect the power cable to another power source, if available, and turn the router power switch back on.
	Faulty power cable.	Turn the router power switch to the standby position (|), (for DC power, also turn the circuit breaker to the Off position and tape it to that position), remove the cable and replace it.
	Faulty power supply.	If the system still fails to come up when the power supply is connected to a different power source with a new power cable, the power supply is probably faulty. Contact a service representative.
System powers off, no STATUS LED, and no operating fans.	Power supply failure.	**If the system is operating with only one power supply, it powers off after five minutes.

Symptom	Possible Cause	Possible Solution
**Except for the Cisco ASR 1001 Router, four power supplies must be installed in the chassis at all times, with a minimum of two power supplies (one per zone) connected to the mains in order to power on the system and ensure sufficient cooling. The system fans are inside the power supply units and must spin for cooling. Because all the system fans can be powered by one power supply, the second power supply unit does not have to be powered on, but must be connected. If you remove a power supply from a system that has four power supplies that are connected and powered on, the system can run only for a maximum of five minutes before shutting down. However, because the fans and power elements are independent within the power supply, the replacement power supply does not have to be energized within five minutes. The only requirement is that the power supply be installed in the chassis in order to energize the fans and maintain proper system cooling.		

Troubleshooting the Cooling Subsystem

Use the information in the following table to isolate problems with the cooling subsystem.

Table 142: Troubleshooting the Cooling Subsystem

Symptom	Possible Cause	Possible Solution

System shuts down, some fans may or may not continue to rotate, and this error message is displayed:
 	
`Queued messages:`
`%ENVM-1-SHUTDOWN:`
`Environmental Monitor initiated shutdown`
 	
This error message indicates that the system has detected an overtemperature condition or out-of-tolerance power condition inside the chassis.
	• One or more fans are not operating.
	• The fans are operating too slowly.
	• The power supply is not operating.
	
	To determine if the fans are operating, listen for them. In noisy environments, place your hand on the rear of the chassis to feel if air is being forced out the vents.
		Contact a service representative.

Symptom	Possible Cause	Possible Solution
Multiple fan failure	Fan speed dropped below the fan fail speed.	• Identify and log the failed fan PEM location. • Replace the PEM.
	Heated exhaust air from other equipment is entering the routers inlet vents.	Move other equipment or the router to ensure proper airflow.

System shuts down, and the following error message is displayed:
 	
`Queued messages:`
`%ENVM-1-SHUTDOWN:`
`Environmental Monitor initiated shutdown`
 	
This error message indicates that the system has detected an over-temperature condition or out-of-tolerance power condition inside the chassis.
 	
Note The system fans may continue to operate although the system shuts down.
	The error message could indicate a faulty component or temperature sensor. Before the system shuts down, use the **show env all** command to display the internal chassis environment.	Contact a service representative.

	If an environmental shutdown results from an out-of-tolerance power condition, the system shuts down.	If the system still fails to come up when the power supply is connected to a different power source with a new power cable, the power supply is probably faulty. Contact a service representative.

Troubleshooting the Shared Port Adapter

Use the information in the following table to isolate problems with the shared port adapter.

Table 143: Troubleshooting the Shared Port Adapter

Symptom	Possible Cause	Possible Solution
Shared Port adapter ENABLED LED is off.	The shared port adapter might have pulled away from the system board.	Reseat the adapter in its slot (you do not have to turn off the system power when removing or replacing port and service adapters). After the system reinitializes the interfaces, the ENABLED LED on the shared port adapter should go on. Ensure that the adapter is correctly replaced, with the screws fully tightened. If the ENABLED LED remains off, the system detected a processor hardware failure. (This LED should be on in normal operation.) Contact a service representative for instructions.

Troubleshooting the Upgrade

The following table lists tips to resolve troubleshooting errors that you may encounter during an upgrade.

Table 144: Upgrade-Related Troubleshooting Tips

Symptom	Cause	Corrective Action

An error message similar to the following example is displayed after you start the upgrade:
 	
`validate_package: SHA-1 hash: calculated 9526c1bf:10341089:84eddb0d:db12a344:b696af14`
 	
`expected 93315a74:57061354:d514ff0c:8b25f8f8:842afb4b`
`SHA-1 hash doesn't match`
 	
`application image failed to run`
	There is a mismatch in the size of the image file that you are using and the expected size of the image file. Note that this error may occur, regardless of the file system to which you copy the image file.	Ensure that the size of the image file that you are using is the same as the expected file size. If required, download the image file again and retry the upgrade.

Symptom	Cause	Corrective Action

An error message similar to the following example is displayed when you try to boot the system, and then the router switches to the rommon prompt:
 	
`Directory an_image.bin not found`
`Unable to locate an_image.bin directory`
`Unable to load an_image.bin`
`boot: error executing "boot harddisk:an_image.bin"`
`autoboot: boot failed, restarting`
	The image file name specified in the boot command is invalid.	

Symptom	Cause	Corrective Action

		Perform the following steps:
		1. Verify that the image file is present in the harddisk:, bootflash:, or external USB device (usb0: or usb1:) by using the **dir** *file-system* command at the rommon prompt.
		2. When you run the **dir** *file-system* command, if a message similar to "Please reset before continuing" is displayed, reconfigure the configuration-register to 0x0 and then run the **reset** command to allow the router to enter the rommon prompt without reattempting to boot using an invalid image.
		
		`rommon> dir harddisk:`
		`Please reset before continuing <<<<<`
		`rommon> confreg 0x0`
		`rommon> reset`
		
		1. Boot the router from the rommon prompt by using a command similar to the following example:
		
		`rommon>`
		`BOOT=harddisk:asr1000rp1-ipbasek9.03.05.01.S.152-1.S1.bin`
		
		1. To save the current environment variable setting, run the **sync** command as follows:
		
		`rommon> sync`
		
		1. Ensure that autoboot has been enabled by using the **confreg 0x2102** command at the rommon prompt, and then run the **reset** command at the same prompt.
		
		If there is no valid image in either the local file system or the external file system, you can run the **boot tftp:** command to install the image that is on the TFTP server. To do this, ensure that the management Ethernet interface is physically connected to the default gateway, configure the ROMmon variables with the appropriate values, and then run the **boot tftp:** command as shown in the following example:
		
		`rommon >`
		`IP_SUBNET_MASK=255.255.255.0`
		`TFTP_SERVER=192.0.2.2`
		`TFTP_FILE=asr1000rp1-ipbasek9.03.05.01.S.152-1.S1.bin`

Symptom	Cause	Corrective Action
		DEFAULT_GATEWAY=192.0.2.1 **IP_ADDRESS=192.0.2.26** rommon > **boot tftp:**
Autoboot has been enabled by using the **config-register 0x2102** command. The following error message is displayed when the router restarts automatically: no valid BOOT image found Final autoboot attempt from default boot device... Located l2tp_rmcd_alg Image size 10271 inode num 12, bks cnt 3 blk size 8*512 # Boot image size = 10271 (0x281f) bytes . . . Boot image size = 11262 (0x2bfe) bytes Unknown image structure Located test Image size 11506 inode num 63, bks cnt 3 blk size 8*512	The **boot system** command has not been configured by running a command similar to the following example: **boot system bootflash:asr1000rp1-ipbasek9.03.05.01.S.152-1.S1.bin**	Perform the following steps: **1.** Press the Break key, or run the **break** command from the console terminal. If Break is enabled, the router enters the rommon mode. Proceed to the last step. If Break is disabled, power cycle the router (turn the router off or unplug the power cord, and then restore power after waiting for 30 seconds). **2.** Within 30 seconds of restoring power to the router, press the Break key or run the **break** command. This action causes the router to enter the rommon mode and display the rommon prompt. **3.** Install a previously working version of the image from bootflash: or harddisk:. Alternatively, copy onto a USB stick the image to which you want to upgrade the router and then install that image on the router.

Replacing or Recovering a Lost Password

This section describes how to recover a lost enable or console login password, and how to replace a lost enable secret password on your Cisco ASR 1000 Series Router.

Note It is possible to recover the enable or console login password. The enable secret password is encrypted, however, and must be replaced with a new enable secret password.

Overview of the Password Recovery Procedure

Following is an overview of the steps in the password recovery procedure:

SUMMARY STEPS

1. If you can log in to the router, enter the **show version** command to determine the existing configuration register value.

2. Press the **Break** key to get to the bootstrap program prompt (ROM monitor). You might need to reload the system image by power cycling the router.
3. Change the configuration register so the following functions are enabled:
4. Power cycle the router by turning power off and then back on.
5. Log in to the router and enter the privileged EXEC mode.
6. Enter the show startup-config command to display the passwords.
7. Recover or replace the displayed passwords.
8. Change the configuration register back to its original setting.

DETAILED STEPS

Step 1 If you can log in to the router, enter the **show version** command to determine the existing configuration register value.

Step 2 Press the **Break** key to get to the bootstrap program prompt (ROM monitor). You might need to reload the system image by power cycling the router.

Note To recover a lost password if the Break function is disabled on the router, you must have physical access to the router.

Caution If you are going to power cycle a Cisco ASR 1013 Router, we recommend that you first perform a graceful reload on the router. Power cycling the router without first performing a graceful reload might cause a loss of data stored in the NVRAM. In other words, the configuration file might be lost. Note that this is not observed when a power failure occurs because each active power supply in the two power supply zones is power cycled at the same time during a power failure. If there is a chance that the router might be power cycled without a graceful reload, we recommend that you use the **boot config** *file-system:configuration-file* **nvbypass** command to specify a file system other than the NVRAM for storing the configuration file. The following are examples:Router(config)# **boot config harddisk:config_file.cfg nvbypass**Router(config)# **boot config bootflash:configuration_data.cfg nvbypass**

Step 3 Change the configuration register so the following functions are enabled:

a) Break
b) Ignore startup configuration
c) Boot from flash memory

Note The key to recovering a lost password is to set the configuration register bit 6 (0x0040) so that the startup configuration (usually in NVRAM) is ignored. This allows you to log in without using a password and to display the startup configuration passwords.

Step 4 Power cycle the router by turning power off and then back on.

Note When powering off the router, wait for 30 seconds before powering it on again.

Step 5 Log in to the router and enter the privileged EXEC mode.

Step 6 Enter the show startup-config command to display the passwords.

Step 7 Recover or replace the displayed passwords.

Step 8 Change the configuration register back to its original setting.

Details of the Password Recovery Procedure

Perform the following steps to recover or replace a lost enable, enable secret, or console login password:

SUMMARY STEPS

1. Attach an ASCII terminal to the console port on your router.
2. Configure the terminal to operate at 9600 baud, 8 data bits, no parity, and 1 stop bit (9600 8N1).
3. If you can log in to the router as a nonprivileged user, enter the show version command to display the existing configuration register value. Note the value for use later and proceed to Step 6. If you cannot log in to the router at all, go to the next step.
4. Press the Break key or send a Break from the console terminal. If Break is enabled, the router enters the ROM monitor, indicated by the ROM monitor prompt (rommon1>). Proceed to Step 6. If Break is disabled, power cycle the router (turn the router off or unplug the power cord, and then restore power after waiting 30 seconds). Then proceed to Step 5.
5. Within 60 seconds of restoring the power to the router, press the Break key or send a Break. This action causes the router to enter the ROM monitor and display the ROM monitor prompt (rommon1>).
6. Set the configuration register using the configuration register utility; enter the **confreg** command at the ROM monitor prompt as follows:
7. Answer yes to the enable *ignore system config info?* question, and note the current configuration register settings.
8. Initialize the router by entering the reset command as follows:
9. Enter no in response to the System Configuration Dialog prompts until the following message is displayed:
10. Press Return. The user EXEC prompt is displayed as follows:
11. Enter the enable command to enter privileged EXEC mode. Then enter the show startup-config command to display the passwords in the configuration file as follows:
12. Scan the configuration file display looking for the passwords (the enable passwords are usually near the beginning of the file, and the console login or user EXEC password is near the end). The passwords displayed look something like this:
13. Enter the configure memory command to load the startup configuration file into running memory. This action allows you to modify or replace passwords in the configuration.
14. Enter the privileged EXEC configure terminal command to enter configuration mode:
15. Change all three passwords using the following commands:
16. You must configure all interfaces to be not administratively shut down as follows:
17. Use the config-register command to set the configuration register to the original value noted in Step 3 or Step 8, or to the factory default value 0x2102 as follows:
18. Press Ctrl-Z (hold down the Control key while you press Z) or enter end to exit configuration mode and return to the EXEC command interpreter.
19. Enter the copy running-config startup-config command to save the new configuration to NVRAM.
20. Enter the reload command to reboot the router.
21. Log in to the router with the new or recovered passwords.

DETAILED STEPS

Step 1 Attach an ASCII terminal to the console port on your router.

Step 2 Configure the terminal to operate at 9600 baud, 8 data bits, no parity, and 1 stop bit (9600 8N1).

Step 3 If you can log in to the router as a nonprivileged user, enter the show version command to display the existing configuration register value. Note the value for use later and proceed to Step 6. If you cannot log in to the router at all, go to the next step.

Step 4 Press the Break key or send a Break from the console terminal. If Break is enabled, the router enters the ROM monitor, indicated by the ROM monitor prompt (rommon1>). Proceed to Step 6. If Break is disabled, power cycle the router (turn the router off or unplug the power cord, and then restore power after waiting 30 seconds). Then proceed to Step 5.

Step 5 Within 60 seconds of restoring the power to the router, press the Break key or send a Break. This action causes the router to enter the ROM monitor and display the ROM monitor prompt (rommon1>).

Step 6 Set the configuration register using the configuration register utility; enter the **confreg** command at the ROM monitor prompt as follows:

Example:

```
rommon1> confreg 0x2142
```

Step 7 Answer yes to the enable *ignore system config info?* question, and note the current configuration register settings.

Step 8 Initialize the router by entering the reset command as follows:

Example:

```
rommon2> reset
```

The router initializes, the configuration register is set to 0x142, and the router boots the system image from flash memory and enters the System Configuration Dialog prompt as follows:

Example:

```
--- System Configuration Dialog --
```

Step 9 Enter no in response to the System Configuration Dialog prompts until the following message is displayed:

Press RETURN to get started!

Step 10 Press Return. The user EXEC prompt is displayed as follows:

Router>

Step 11 Enter the enable command to enter privileged EXEC mode. Then enter the show startup-config command to display the passwords in the configuration file as follows:

Router# show startup-config

Step 12 Scan the configuration file display looking for the passwords (the enable passwords are usually near the beginning of the file, and the console login or user EXEC password is near the end). The passwords displayed look something like this:

enable secret 5 1ORPP$s9syZt4uKn3SnpuLDrhuei

enable password 23skiddoo

.

.

line con 0

password onramp

The enable secret password is encrypted and cannot be recovered; it must be replaced. The enable and console login passwords may be encrypted or clear text. Proceed to the next step to replace an enable secret, console login, or enable password. If there is no enable secret password, note the enable and console login passwords, if they are not encrypted, and proceed to Step 17.

Caution Do not execute the next step unless you have determined you must change or replace the enable, enable secret, or console login passwords. Failure to follow the steps as shown might cause you to erase your router configuration.

Step 13 Enter the configure memory command to load the startup configuration file into running memory. This action allows you to modify or replace passwords in the configuration.

Router# configure memory

Step 14 Enter the privileged EXEC configure terminal command to enter configuration mode:

Hostname# configure terminal

Step 15 Change all three passwords using the following commands:

Hostname(config)# enable secret newpassword1

Hostname(config)# enable password newpassword2

Hostname(config)# line con 0

Hostname(config-line)# password newpassword3

Change only the passwords necessary for your configuration. You can remove individual passwords by using the no form of the above commands. For example, entering the no enable secret command removes the enable secret password.

Step 16 You must configure all interfaces to be not administratively shut down as follows:

Hostname(config)# interface gigabitethernet 0/0

Hostname(config-int)# no shutdown

Enter the equivalent commands for all interfaces that were originally configured. If you omit this step, all interfaces are administratively shut down and unavailable when the router is restarted.

Step 17 Use the config-register command to set the configuration register to the original value noted in Step 3 or Step 8, or to the factory default value 0x2102 as follows:

Hostname(config)# config-register 0x2102

Step 18 Press Ctrl-Z (hold down the Control key while you press Z) or enter end to exit configuration mode and return to the EXEC command interpreter.

Caution Do not execute the next step unless you have changed or replaced a password. If you skipped Step 13 through Step 16, skip to Step 20. Failure to observe this caution causes you to erase your router configuration file.

Step 19 Enter the copy running-config startup-config command to save the new configuration to NVRAM.

Step 20 Enter the reload command to reboot the router.

Step 21 Log in to the router with the new or recovered passwords.

What to do next

This completes the steps for recovering or replacing a lost enable, enable secret, or console login password.

Recovering the Password When a Standby RP is Included in the System

If a standby RP is included in the system, perform the following procedure to recover the password:

Note You need not perform the password recovery procedure on the standby RP. After you bypass the NVRAM (startup-config) on the active RP, subsequent reloads of the standby RP synchronize the running-config of the standby RP with the running-config of the active RP.

1. Connect to the console port of the standby RP. It is recommended that you create a console port connection to the standby RP and not use the console port of the active RP.
2. Reset both RPs to the ROMmon prompt.

Do not reboot the standby RP at this point. Leave it at the ROMmon prompt.

1. Perform the password recovery procedure on the active RP.
2. After the running-config of the active RP has been modified with the password removed from the running-config, save the new running-config to NVRAM (that is, copy the contents of the running-config to the startup-config).
3. Start the standby RP.

The standby RP synchronizes its configuration with that of the active RP. The new configuration does not include a password.

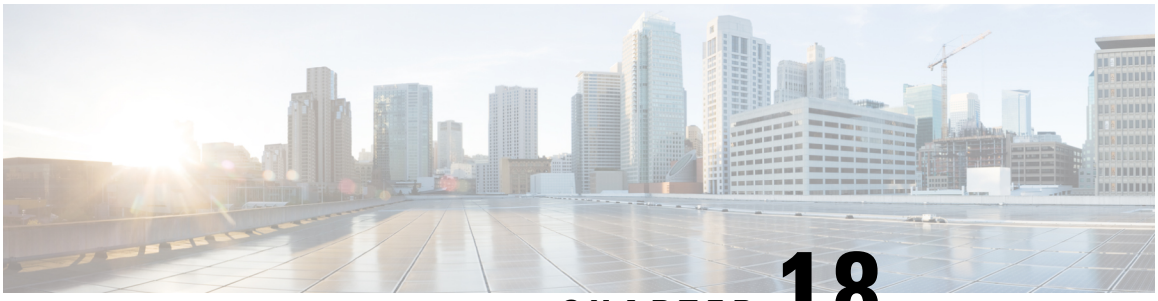

CHAPTER 18

MIBs Overview

This document lists the MIBs in Cisco ASR 1001 Router.

- MIBs for the Cisco ASR 1001 Router, on page 571

MIBs for the Cisco ASR 1001 Router

The Cisco ASR 1001 Router can be managed using the following MIBs:

- MIBs for the Cisco ASR 1001 Router with IDC-HD80G
  - CISCO-ENTITY-ALARM-MIB
  - CISCO-ENTITY-FRU-CONTROL-MIB
  - CISCO-ENTITY-SENSOR-MIB
  - CISCO-ENTITY-VENDORTYPE-OID-MIB
  - ENTITY-MIB
  - ENTITY-SENSOR-MIB
  - ENTITY-STATE-MIB
- MIBs for the Cisco ASR 1001 Router with IDC-OC3POS
  - CISCO-ENTITY-ALARM-MIB
  - CISCO-ENTITY-FRU-CONTROL-MIB
  - CISCO-ENTITY-SENSOR-MIB
  - CISCO-ENTITY-VENDORTYPE-OID-MIB
  - CISCO-IF-EXTENSION-MIB
  - CISCO-SONET-MIB
  - ENTITY-MIB
  - ENTITY-SENSOR-MIB
  - ENTITY-STATE-MIB
  - IF-MIB
  - SONET-MIB
- MIBs for the Cisco ASR 1001 Router with IDC-4XGE
  - CISCO-ENTITY-ALARM-MIB
  - CISCO-ENTITY-FRU-CONTROL-MIB
  - CISCO-ENTITY-SENSOR-MIB

- CISCO-ENTITY-VENDORTYPE-OID-MIB
- CISCO-IF-EXTENSION-MIB
- ENTITY-MIB
- ENTITY-SENSOR-MIB
- ENTITY-STATE-MIB
- ETHERLIKE-MIB (RFC 3635)
- IF-MIB

- MIBs for the Cisco ASR 1001 Router with IDC-CHT1/E1
  - CISCO-ENTITY-ALARM-MIB
  - CISCO-ENTITY-FRU-CONTROL-MIB
  - CISCO-ENTITY-SENSOR-MIB
  - CISCO-ENTITY-VENDORTYPE-OID-MIB
  - CISCO-IF-EXTENSION-MIB
  - DS1-MIB (RFC 2495)
  - ENTITY-MIB
  - ENTITY-SENSOR-MIB
  - ENTITY-STATE-MIB
  - IF-MIB
- MIBs for the Cisco ASR 1001 Router with IDC-4XT3
  - CISCO-ENTITY-ALARM-MIB
  - CISCO-ENTITY-FRU-CONTROL-MIB
  - CISCO-ENTITY-SENSOR-MIB
  - CISCO-ENTITY-VENDORTYPE-OID-MIB
  - CISCO-IF-EXTENSION-MIB
  - ENTITY-MIB
  - ENTITY-SENSOR-MIB
  - ENTITY-STATE-MIB
  - IF-MIB
- MIBs for the Cisco ASR 1001 without IDCs
  - CISCO-ENTITY-ALARM-MIB
  - CISCO-ENTITY-FRU-CONTROL-MIB
  - CISCO-ENTITY-SENSOR-MIB
  - CISCO-ENTITY-VENDORTYPE-OID-MIB
  - ENTITY-MIB
  - ENTITY-SENSOR-MIB