ERICSSON ENTERPRISE WIRELESS DOCUMENTATION PORTAL

E3000 Series Enterprise Branch Router Quick Start Guide

11/06/2025

This PDF Book is current as of the download date. Please check docs.cradlepoint.com to ensure you have the most recent version of this content.

© Copyright 2024 Ericsson Enterprise Solutions, Inc. All rights reserved.

1. Introduction
    1.1. Bluetooth Feature
    1.2. GNSS Feature
    1.3. Intended Audience
2. E3000 Series Enterprise Branch Router Models
3. Before You Begin
    3.1. Location Considerations
    3.2. Expansion Slot
    3.3. SIM Card for Wireless Connectivity
    3.4. Installing an External Modem
    3.5. Required Tools for Setup
4. Setup
    4.1. STEP 1: Check box for content.
        4.1.1. Accessories
    4.2. STEP 2: Remove the modem door.
    4.3. STEP 3: Insert a SIM card into the embedded modem slot(s).
    4.4. STEP 4 (Optional): Set up and install the MC400 modular modem.
    4.5. STEP 5: Reinstall the modem door.
    4.6. STEP 6: Attach the cellular antennas.
    4.7. STEP 7: Attach the Antenna Alignment tool.
    4.8. STEP 8: Attach the Wi-Fi antennas.
    4.9. STEP 9: Mount the router.
        4.9.1. Desk
        4.9.2. Wall
        4.9.3. Rack
    4.10. STEP 10 (Optional): Connect the Ethernet cable.
    4.11. STEP 11: Power up the router.
    4.12. STEP 12: Activate the router in NetCloud Manager.
5. Understanding LEDs
6. Troubleshooting
7. Cradlepoint Product Disclaimer and Limitation of Liability Disclaimer
8. Installer Responsibility
9. Limitation of Liability
10. Safety and Regulatory Warnings

1 | Introduction

This document provides a brief overview of the E3000 Series Enterprise Branch Router, discusses what is inside the box, and provides basic setup and install instructions.

Note

The Verify app includes many of the same instructions with an alternate order. This document supports the Verify app instructions. Use the Navigation section below to locate the topics most applicable to troubleshooting your setup issues. For additional setup support, contact a professional installer or refer to our Contact Us page.

1.1 | Bluetooth Feature

The E3000 Enterprise Branch Router includes a Bluetooth transceiver, which is ideal for use with in-store beaconing. Additionally, the Bluetooth feature can be used for IoT device connectivity such as freezer monitors or other food service monitors.

1.2 | GNSS Feature

The E3000 Enterprise Branch Router includes a GNSS (Global Navigation Satellite System) feature that receives positioning and timing data from space to determine location. This feature can be used for applications such as AVL (Automatic Vehicle Location), geofencing, or even installation site identification.

1.3 | Intended Audience

This article is intended for professional networking hardware installers. It provides basic knowledge and should be used only as a reference guide for installing the router. Due to the unique nature of each installation, potential for RF exposure, and enhanced separation requirements, customers must

have a professional install their 5G hardware. This article is a reference guide and is intended only to provide best practices.

Refer to the Cradlepoint Product Disclaimer and Limitation of Liability section for further information.

2 | E3000 Series Enterprise Branch Router Models

This document applies to all of the following products:

CRADLEPOINT E3000-C18B MODEL	S5A950A
CRADLEPOINT E3000-5GB MODEL	S5A111A
WITH OPTIONAL PLUG-IN MODULES:	
CRADLEPOINT MC400LP4 MODEL	MC400LP4
CRADLEPOINT MC400LP5 MODEL	MC400LP5
CRADLEPOINT MC400LP6 MODEL	MC400LP6
CRADLEPOINT MC400-600M-C MODEL	MC400-600M-C
CRADLEPOINT MC400-1200M-B MODEL	MC400-1200M

3 | Before You Begin

Read the following before setting up the router.

3.1 | Location Considerations

The following includes best practice considerations for identifying a mounting location:

- Ensure the device is positioned to receive optimal signal. Avoid positioning near concrete walls, metal or reflective surfaces, or any other objects that may interfere with RF reception.
- Ensure plenty of ventilation. Avoid installing the device in enclosed spaces.
- Do not install the device in direct exposure to the elements. Extreme heat or cold can and will impact the router's performance.
- For the E3000-5GB router, keep the device out of reach. It is required that the endpoint be installed behind a locked/gated enclosure to restrict unauthorized access.
- Mount in locations compliant with the Safety, Regulatory, and Warranty guide, included in the product shipping box.

3.2 | Expansion Slot

The E3000 series router includes an expansion (SFP/SFP+) slot for additional Cradlepoint technology. This expansion slot is proprietary and is compatible only with Cradlepoint expansion modules. Insertion of any other type of module could result in damage to the non-Cradlepoint module.

3.3 | SIM Card for Wireless Connectivity

A wireless broadband data plan must be added to the router for wireless broadband connectivity. Wireless broadband data plans are available from network operators. The SIM card must be activated and provisioned by the network operator. Contact your network operator for details about selecting a data plan and about the process for provisioning the SIM.

3.4 | Installing an External Modem

The E3000 series router includes a slot for an additional MC400 LTE modem. This enhanced capability allows for redundancy, advanced configuration, failover, and upgradability. The router supports both the MC400-600M or the MC400-1200M.

Refer to the following for more information:

- MC400 Webpage
- MC400 Spec Sheet
- MC400 Quick Start Guide

3.5 | Required Tools for Setup

- #0 Philips-head screwdriver (for LTE modem door cover)
- #2 Philips-head screwdriver (for the mounting screws)
- Mounting equipment (varies upon desired mounting location)
- Drill with 2.5 mm (or equivalent) drill bit

4 | Setup

Read through the following to set up the router or use the Verify installation app.

4.1 | STEP 1: Check box for content.

The following should be included in the box:

- [1] E3000 Enterprise Branch router
- [4] LTE 600MHz-6GHz cellular modem antennas
- [4] Dual-band, high-gain Wi-Fi antennas
- [1] Power supply
- [1] Power supply cable
- [1] MC400 modem door screw (Philips-type)
- [1] MC400 modem door security screw (Torx-type)
- [4] Rubber feet for desk mounting
- [1] Screw Pack for wall mounting
- [1] Antenna Alignment tool
- [2] Rack mount brackets
- [12] Rack mount bracket screws
- [4] Rack mount screws
- [1] Getting Started reference sheet
- [1] Antenna alignment instructions/wall mount template
- [1] Safety, Regulatory, and Warranty Guide

4.1.1 | Accessories

To enable cellular connectivity, you will also need at least one activated 2FF-sized SIM card with an active cellular data plan. Additionally, the router models may be enhanced with a Cradlepoint modular modem and additional external antennas.

4.2 | STEP 2: Remove the modem door.

Remove the modem door covering the SIM slots and lift away from the router.

NOTE: The modem door is magnetically attached to the router.

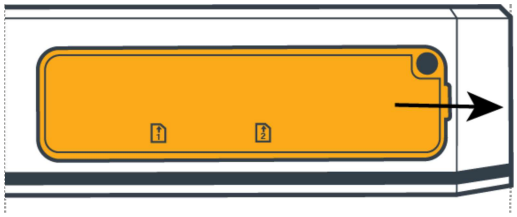

4.3 | STEP 3: Insert a SIM card into the embedded modem slot(s).

1. Insert an activated 2FF-sized SIM card into the SIM1 slot (contacts up, notch in). The SIM card clicks into place.
2. Optionally, insert an active SIM into the SIM2 slot with the same orientation.

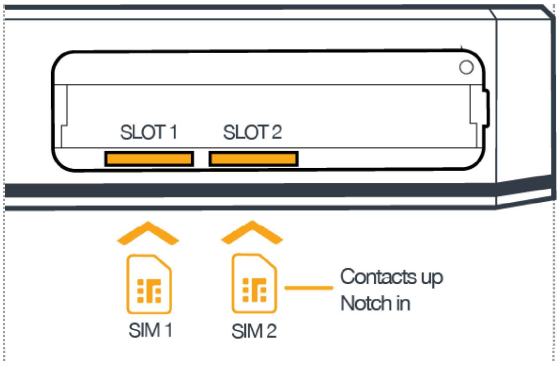

4.4 | STEP 4 (Optional): Set up and install the MC400 modular modem.

The router has a slot for a second, removable modem (MC400). If using a modular modem with the router, the additional modem must be installed before the router can be set up. To install the modem, do the following:

1. Insert an activated 2FF SIM card into the SIM1 slot, metal contacts down and notch in towards the modem. The SIM clicks into place. Depress again to remove the SIM, if necessary.

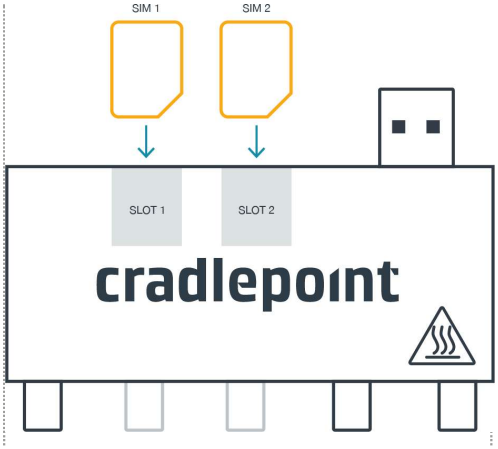

2. Slide the modem into the modem slot, USB plug first with the Cradlepoint logo facing up.

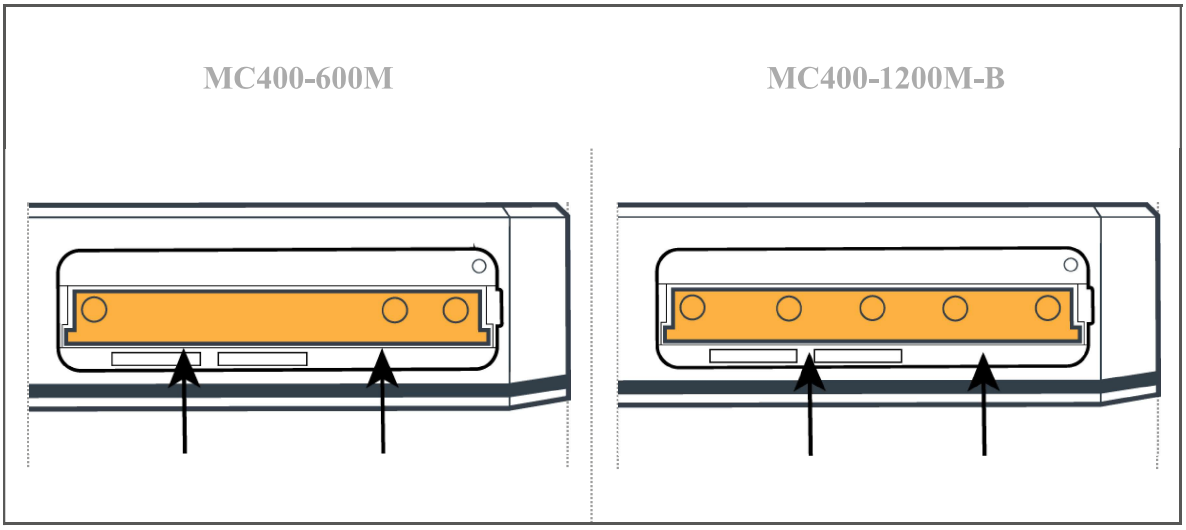

4.5 | STEP 5: Reinstall the modem door.

1. If you installed the optional MC400 modular modem, remove the black decal from the front of the modem door to expose the antenna port openings.
2. Snap the modem door into place.
3. Secure the modem door with the modem door screw (included).

4.6 | STEP 6: Attach the cellular antennas.

Attach the cellular (paddle) antennas to the ports marked with MAIN or DIV for the E3000-C18B router or MAIN, MIMO1, MIMO2, or DIV for the E3000-5GB router, as shown in the following images.

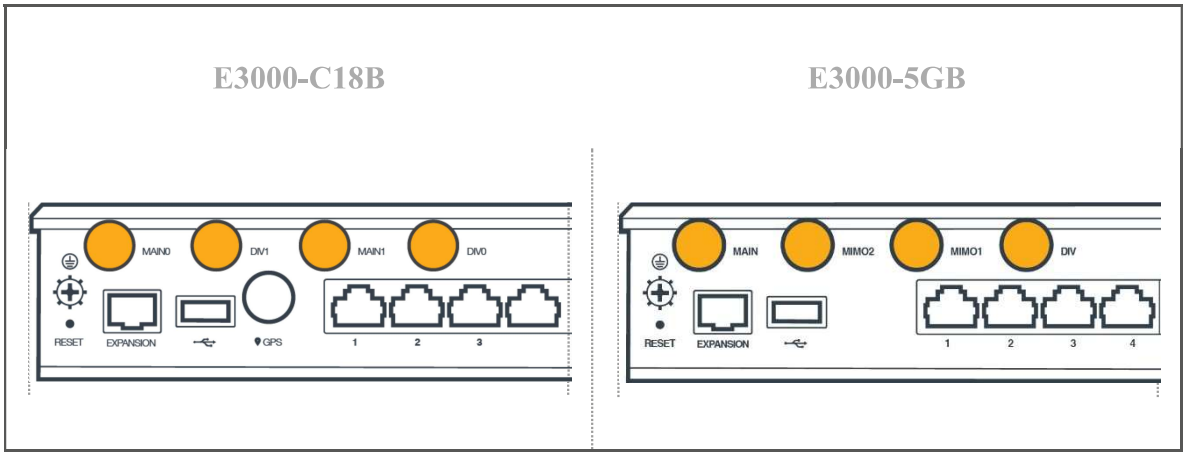

1. Hold the antenna straight and twist the base to thread onto the connector.
2. Tighten with fingers only (maximum torque not to exceed 4 in-lbs/ .45 Nm). Do not over-tighten.
3. Attach the cellular antennas to the MC400 modular modem, if installed.

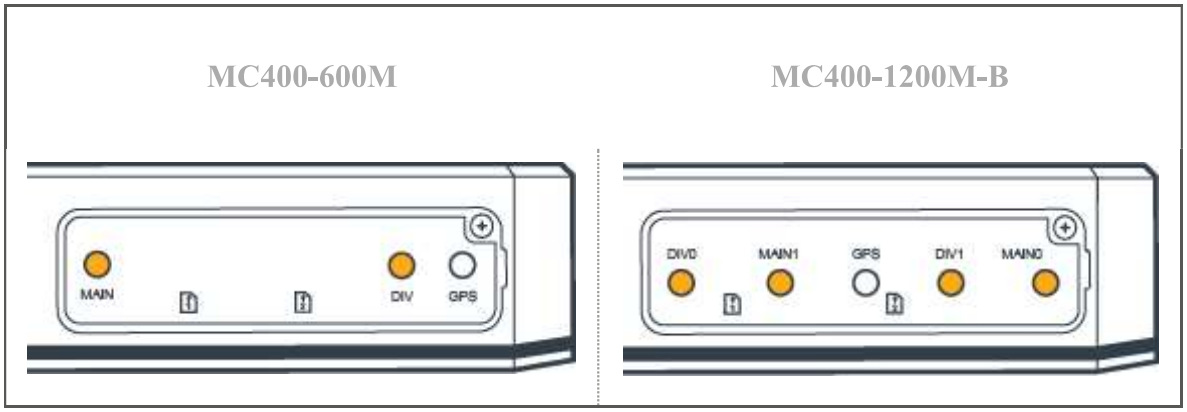

4.7 | STEP 7: Attach the Antenna Alignment tool.

Ensure all cellular (paddle) antennas are appropriately attached and are pointing straight out from the router and then complete the following:

1. Starting from the corner, bend the first antenna upward to 90 degrees.
2. The second antenna stays pointed straight out.

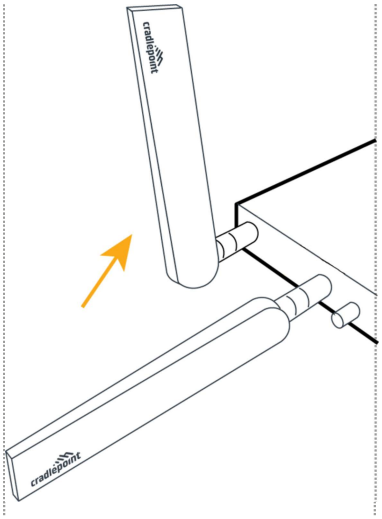

3. Bend the third antenna to 90 degrees and keep the fourth antenna straight.
4. Hold the Antenna Alignment Tool in the same orientation as the router.
5. Slide the Antenna Alignment Tool down the antennas that are bent to 90 degrees until it snaps on the straight antennas.

   The Antenna Alignment tool does not move or slide around once it is snapped into place, allowing for any desired router position during mounting.

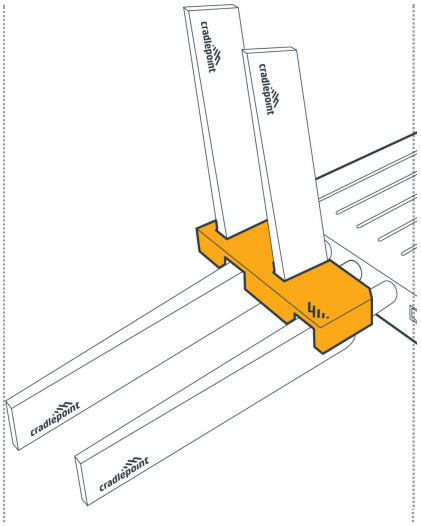

Note

If the MC400 modular modem is installed, use a similar antenna alignment. The MC400 does not come with an alignment tool.

4.8 | STEP 8: Attach the Wi-Fi antennas.

Connect the Wi-Fi antennas included with the router to the ports marked with 2.4/5GHz.

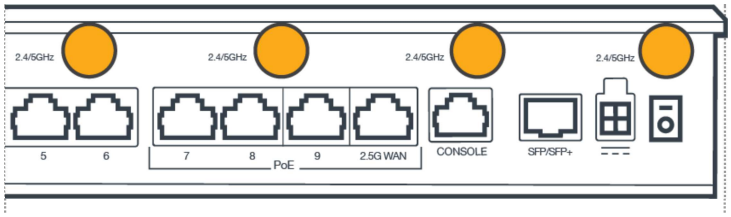

Note

Only the Wi-Fi antennas included with the router are authorized for use per the FCC Grant of Equipment Authorization. Using any other Wi-Fi antennas is not authorized and may be illegal to use.

1. Hold the antenna straight and twist the base to thread onto the connector.
2. Tighten with fingers only (maximum torque not to exceed 4 in-lbs/ .45 Nm). Do not over-tighten.
3. Angle the Wi-Fi antennas for optimal signal reception.

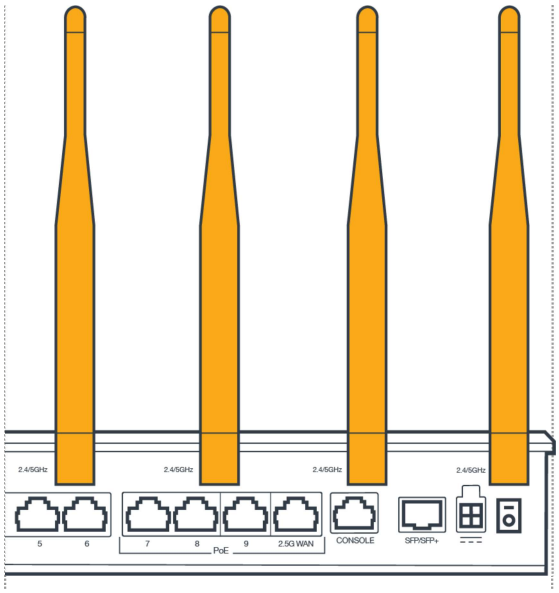

4.9 | STEP 9: Mount the router.

The following are best practices for mounting the router:

4.9.1 | Desk

1. Install the rubber feet (included) on the bottom of the router.
2. Place the router on a flat surface away from objects that cause RF interference, including concrete, reflective and metal surface, microwaves, and so on.

4.9.2 | Wall

1. Using the included mounting insert, mark the desired mounting location on the wall using a pen or marker.
2. Ensure the mounting location is away from objects that cause RF interference, including concrete, reflective and metal surface, microwaves, and so on.
3. Pre-drill holes for the mounting screws.
4. Use wall anchors to ensure the endpoint is securely mounted.

4.9.3 | Rack

The router includes rack mounting hardware. To install the router into a rack, do the following:

1. Screw the rack mounts onto the sides of the router.
2. Slide the router into the rack and secure using the rack mount screws (included).

4.10 | STEP 10 (Optional): Connect the Ethernet cable.

1. Connect the Ethernet cable to the blue port marked WAN on the back of the router.
2. Connect the other end to the WAN source.

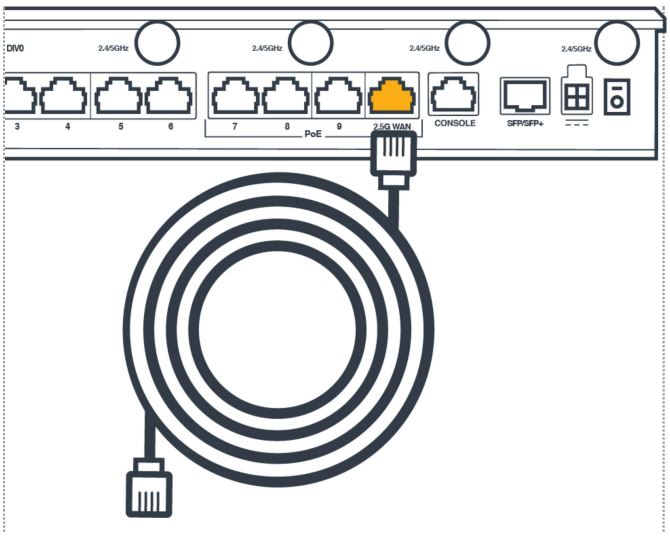

4.11 | STEP 11: Power up the router.

1. Connect the power supply to the router and then plug the other end into an electrical outlet.
2. Switch the device to the ON position (O = Off, – = On).

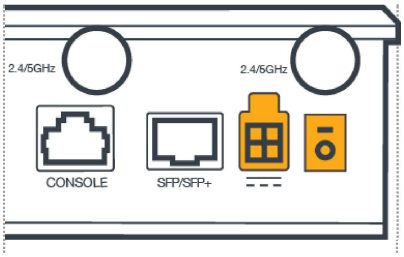

3. Allow one minute for the router to run through its bootup sequence.

Refer to the Understanding LEDs section of this guide for more information about LED indicator status.

4.12 | STEP 12: Activate the router in NetCloud Manager.

Activate the router through NetCloud Manager (NCM). Device activation requires that you log into your NetCloud Manager account. Refer to Getting Started with NetCloud Manager for more information.

5 | Understanding LEDs

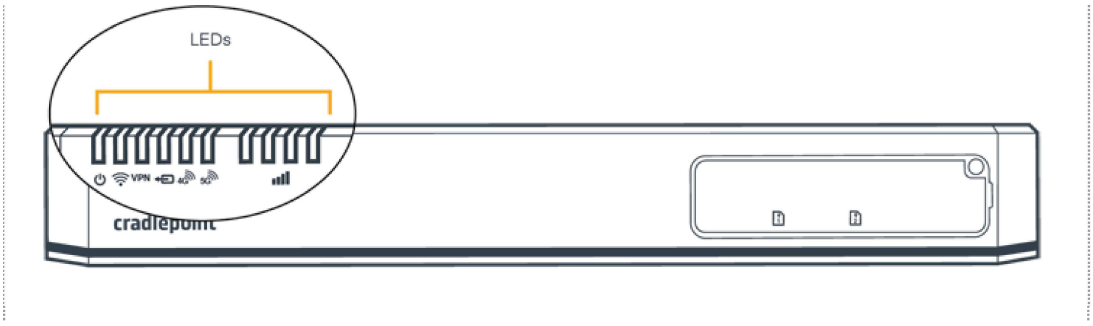

The router uses LED lights on the front panel to communicate various status conditions. Use the tables below to verify the status of the router after the 1-minute boot up cycle.

⏻	Indicates the router's power status. NOTE: The router must be powered using an approved 54 VDC power source.

		No Light = Not receiving power. Check the power switch and the power source connection.
		Green = Powered on.
		Yellow = Attention. Log into NetCloud Manager and troubleshoot connection issues. NOTE: Upon initial installation, the light will be yellow until the device is registered in NetCloud Manager (NCM).

	LED bars indicate the active modem's signal strength. • When the embedded modem is active, the bars are blue ( ). • When the removable modem is active, the bars are green ( ). • When the remote (captive) modem is active, the bars will be cyan (blue-green color).	
		Four Solid Bars = Strongest signal.
		One Blinking Bar = Weakest signal (a blinking bar indicates half of a bar).
		Four Blinking Bars = SIM door is not installed, modem is off.

VPN	Indicates the status of the VPN connection.	
		Blue = Connected to an active VPN.

	Green = Router is connected to a remote modem via WAN (captive modem).

	Indicates the status of removable, modular LTE modem(s).
	No Light = No removable modem detected.
	Green = Modem has established an active connection.
	Blinking Green = Modem is connecting.
	Blinking Yellow = Data connection error. No modem connection possible.
	Blinking Red = Modem is in the process of resetting.

4G 5G	Indicates the connection status for the active modem.
	No Light = Modem not connected.
	Solid Green = Modem has established an active WAN connection.
	Blinking Green = Modem is connecting.

		Solid Yellow = Modem is not active.
		Blinking Yellow = Data connection error. No modem connection possible.
		Blinking Red = Modem is in the process of resetting. NOTE: Blinking Red with Signal Strength LEDs = SIM door is not installed, modem is off.

	Indicates the connection status for the active modem.	
		Blue = Wi-Fi is on and operating normally.
		No Light = Wi-Fi is not operating.

OTHER	ADDITIONAL LED INDICATIONS The white lights along the base of the router and the Cradlepoint logo on the top face of the device light up when the device is connected to a registered NetCloud Manager account.	

6 | Troubleshooting

If the device takes longer than five minutes to connect to the Internet, log into the local UI of the device to make configuration changes or to start the troubleshooting process. You must be physically co-located with the device to do this. Refer to No Internet or Connection Issues for more information.

Once the device connects to the Internet, it should then connect to your NetCloud Manager account and start its configuration download.

Help and Support

Cradlepoint Connect Customer Community

Cradlepoint Support Services

Contact Us

Terms of Service

Terms of Service &License Agreement

Privacy Policy

GDPR Privacy Policy

Return to top

7 | Cradlepoint Product Disclaimer and Limitation of Liability Disclaimer

Cradlepoint, Inc. (“Cradlepoint”) does not warrant that the hardware will work properly in all environments or applications, and makes no warranty or representation, either implied or expressed, with respect to the quality, performance, merchantability, or fitness for a particular purpose of the E3000 Enterprise Branch router even when installed in accordance with this installation guide.

This installation guide is provided “AS IS,” without any warranty of any kind. Without limiting the foregoing, to the maximum extent permitted by applicable law Cradlepoint expressly disclaims all representations, warranties and conditions, whether express, implied, statutory, or otherwise, with respect to this installation guide, including without limitation any warranty of title, non-infringement, merchantability or fitness for a particular purpose. While Cradlepoint has made every effort to ensure this installation guide is accurate, Cradlepoint disclaims liability for any inaccuracies or omissions that may have occurred and shall not be liable for any adverse results caused, in whole or in part, by the installer’s reliance upon the instructions in this installation guide. Information in this installation guide is subject to change without notice and does not represent a commitment on the part of Cradlepoint. Cradlepoint assumes no responsibility for any inaccuracies that may be contained in this installation guide. Cradlepoint makes no commitment to update or keep current the information in this installation guide and reserves the right to make improvements

to this installation guide and/or to the products described in this installation guide, at any time without notice.

If you find information in this installation guide that is incorrect, misleading, or incomplete, Cradlepoint would appreciate your comments and suggestions.

8 | Installer Responsibility

Cradlepoint hereby disclaims any liability for failure of the installer to install the hardware properly and for any other acts and omissions of the installer. By using this installation guide, you agree to indemnify and hold Cradlepoint harmless from and against any and all, liabilities, losses, damages, costs and expenses (including without limitation attorneys' fees and costs) incurred by Cradlepoint arising out of or in connection with any installation work that is done other than in accordance with the instructions in this installation guide.

9 | Limitation of Liability

TO THE MAXIMUM EXTENT PERMITTED BY APPLICABLE LAW, IN NO EVENT WILL CRADLEPOINT BE LIABLE TO YOU OR TO ANYONE CLAIMING THROUGH OR UNDER YOU FOR ANY LOST PROFITS, EQUIPMENT DOWNTIME, OR LOSS OF DATA OR BUSINESS OPPORTUNITY, OR FOR ANY INDIRECT, SPECIAL, EXEMPLARY, INCIDENTAL, CONSEQUENTIAL OR PUNITIVE DAMAGES, HOWEVER CAUSED AND UNDER ANY THEORY OF LIABILITY, ARISING IN ANY WAY IN CONNECTION WITH YOUR INSTALLATION ACTIVITIES, EVEN IF CRADLEPOINT HAS BEEN ADVISED OF THE POSSIBILITY OF SUCH DAMAGE. SOME JURISDICTIONS (SUCH AS THE STATE OF NEW JERSEY) DO NOT ALLOW THE EXCLUSION OR LIMITATION OF INCIDENTAL OR CONSEQUENTIAL DAMAGES, SO THE ABOVE EXCLUSION OR LIMITATION MAY NOT APPLY TO YOU. IN NO EVENT SHALL THE AGGREGATE LIABILITY OF CRADLEPOINT AND/OR ITS AFFILIATES ARISING UNDER OR IN CONNECTION WITH THE PRODUCT, HOWEVER ARISING, REGARDLESS OF THE NUMBER OF EVENTS, OCCURRENCES, OR CLAIMS GIVING RISE TO LIABILITY, EXCEED THE PRICE PAID BY THE ORIGINAL PURCHASER OF THE PRODUCT. THE FOREGOING LIMITATIONS WILL APPLY EVEN IF THE ABOVE STATED REMEDY FAILS OF ITS ESSENTIAL PURPOSE.

10 | Safety and Regulatory Warnings

- Caution

  Risk of Explosion if battery is replaced by an incorrect type. The battery is not user serviceable. Please contact Cradlepoint Support if the Real Time Clock battery needs to be replaced.

- This product is intended to be supplied by a UL Listed Power Supply rated 54 Vdc, minimum 3.33A.

- This equipment is only to be connected to PoE network devices within the same building as the router. Do not directly connect to PoE devices outside the building.

- This device must be grounded to a suitable earth ground at the installation location. If the power outlet does not provide earth ground, an earth ground must be connected to the grounding terminal on the back of the device.