Magnetic Speaker Holder for PAD-PARAW & Mobile Floor Stands (Black/White)

INSTRUCTION MANUAL

ADD-SPKB / ADD-SPKW

Component Checklist

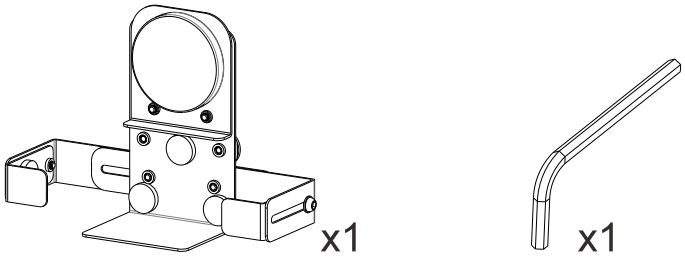

Mount on the pole

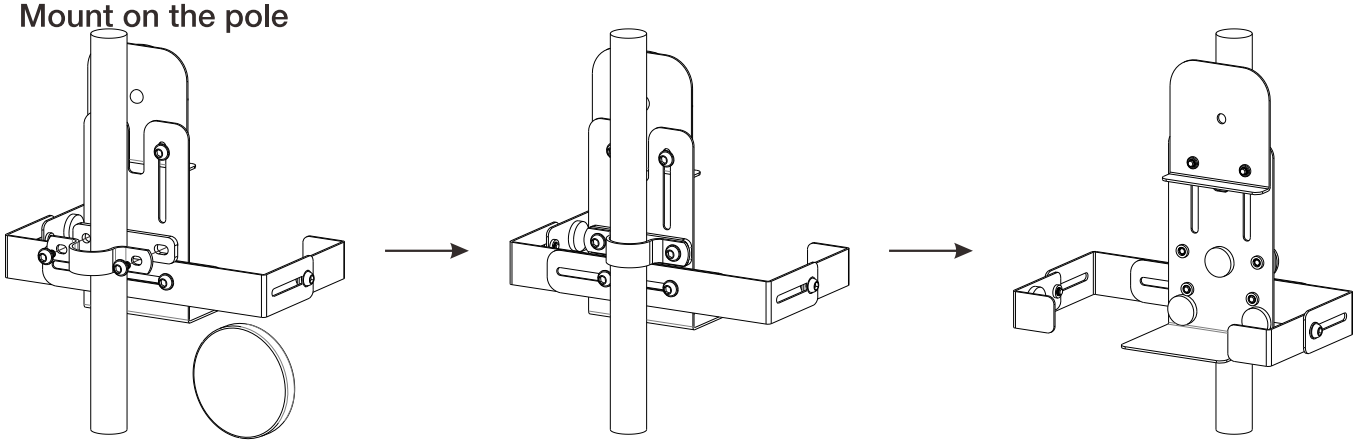

Remove the magnet

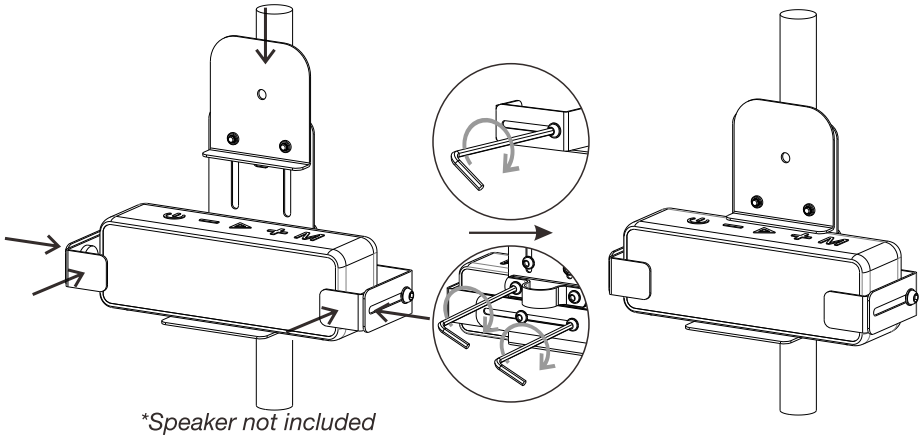

*Speaker not included

Mount on the Enclosure

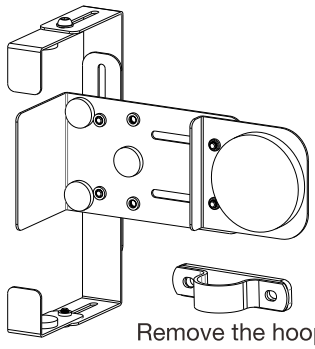

Remove the hoop

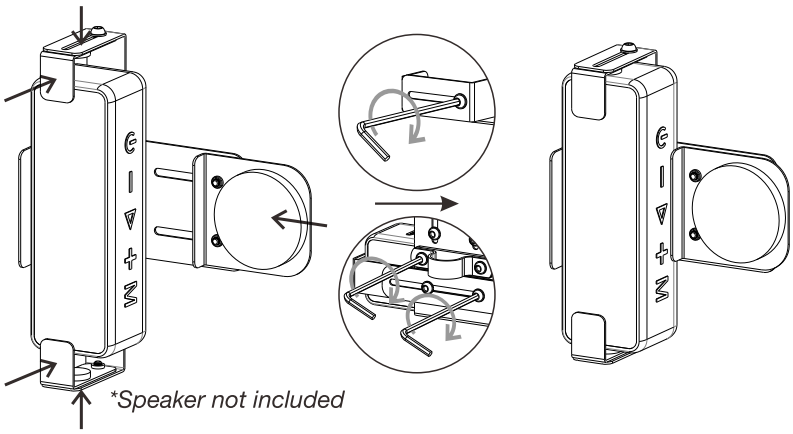

*Speaker not included

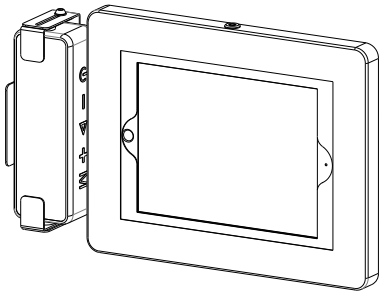

*Enclosure not included

36 Taaffe Place Brooklyn, NY 11205 support@ctadigital.com 778-991-0169 www.ctadigital.com