

Cisco NCS 540 Router Hardware Installation Guide

First Published: 2018-03-28

Last Modified: 2021-02-26

Americas Headquarters
Cisco Systems, Inc.
170 West Tasman Drive
San Jose, CA 95134-1706
USA
http://www.cisco.com
Tel: 408 526-4000
800 553-NETS (6387)
Fax: 408 527-0883

THE SPECIFICATIONS AND INFORMATION REGARDING THE PRODUCTS IN THIS MANUAL ARE SUBJECT TO CHANGE WITHOUT NOTICE. ALL STATEMENTS, INFORMATION, AND RECOMMENDATIONS IN THIS MANUAL ARE BELIEVED TO BE ACCURATE BUT ARE PRESENTED WITHOUT WARRANTY OF ANY KIND, EXPRESS OR IMPLIED. USERS MUST TAKE FULL RESPONSIBILITY FOR THEIR APPLICATION OF ANY PRODUCTS.

THE SOFTWARE LICENSE AND LIMITED WARRANTY FOR THE ACCOMPANYING PRODUCT ARE SET FORTH IN THE INFORMATION PACKET THAT SHIPPED WITH THE PRODUCT AND ARE INCORPORATED HEREIN BY THIS REFERENCE. IF YOU ARE UNABLE TO LOCATE THE SOFTWARE LICENSE OR LIMITED WARRANTY, CONTACT YOUR CISCO REPRESENTATIVE FOR A COPY.

The Cisco implementation of TCP header compression is an adaptation of a program developed by the University of California, Berkeley (UCB) as part of UCB's public domain version of the UNIX operating system. All rights reserved. Copyright © 1981, Regents of the University of California.

NOTWITHSTANDING ANY OTHER WARRANTY HEREIN, ALL DOCUMENT FILES AND SOFTWARE OF THESE SUPPLIERS ARE PROVIDED “AS IS" WITH ALL FAULTS. CISCO AND THE ABOVE-NAMED SUPPLIERS DISCLAIM ALL WARRANTIES, EXPRESSED OR IMPLIED, INCLUDING, WITHOUT LIMITATION, THOSE OF MERCHANTABILITY, FITNESS FOR A PARTICULAR PURPOSE AND NONINFRINGEMENT OR ARISING FROM A COURSE OF DEALING, USAGE, OR TRADE PRACTICE.

IN NO EVENT SHALL CISCO OR ITS SUPPLIERS BE LIABLE FOR ANY INDIRECT, SPECIAL, CONSEQUENTIAL, OR INCIDENTAL DAMAGES, INCLUDING, WITHOUT LIMITATION, LOST PROFITS OR LOSS OR DAMAGE TO DATA ARISING OUT OF THE USE OR INABILITY TO USE THIS MANUAL, EVEN IF CISCO OR ITS SUPPLIERS HAVE BEEN ADVISED OF THE POSSIBILITY OF SUCH DAMAGES.

Any Internet Protocol (IP) addresses and phone numbers used in this document are not intended to be actual addresses and phone numbers. Any examples, command display output, network topology diagrams, and other figures included in the document are shown for illustrative purposes only. Any use of actual IP addresses or phone numbers in illustrative content is unintentional and coincidental.

All printed copies and duplicate soft copies of this document are considered uncontrolled. See the current online version for the latest version.

Cisco has more than 200 offices worldwide. Addresses and phone numbers are listed on the Cisco website at www.cisco.com/go/offices.

Cisco and the Cisco logo are trademarks or registered trademarks of Cisco and/or its affiliates in the U.S. and other countries. To view a list of Cisco trademarks, go to this URL: https://www.cisco.com/c/en/us/about/legal/trademarks.html. Third-party trademarks mentioned are the property of their respective owners. The use of the word partner does not imply a partnership relationship between Cisco and any other company. (1721R)

© 2018–2021 Cisco Systems, Inc. All rights reserved.



CONTENTS

CHAPTER 1 **Safety Warnings** 1

Standard Warning Statements 1

Safety Guidelines for Personal Safety and Equipment Protection 2

Safety Precautions for Module Installation and Removal 2

Safety with Electricity 3

Power Supply Considerations 5

Power Connection Guidelines 5

Guidelines for DC-Powered Systems 6

Guidelines for AC-Powered Systems 6

Prevent Power Loss 6

Preventing ESD Damage 6

CHAPTER 2 **Cisco NCS 540 Router Overview** 9

Network Interfaces 10

Specification 12

Interface Naming 12

Network Timing Interfaces 14

GNSS 15

GNSS Module RF Input Requirements 15

External Alarm Inputs 16

Console 16

USB Console 16

Online Insertion and Removal 16

Supported Transceiver Modules 17

CHAPTER 3 **Prepare for Installation** 19

General Precautions 19
Site Planning Checklist 20
Environmental Requirements 20
Airflow Guidelines 20
Site Power Guidelines 23
Electrical Circuit Requirements 24
Site Cabling Guidelines 24
Asynchronous Terminal Connections 24
Interference Considerations 24
Tools and Equipment 25
Prepare Your Location 25
Prepare Yourself 26
Prepare Rack for Router Installation 27
Cabinet Selection Guidelines 28
Unpack the Cisco NCS 540 Router 29

CHAPTER 4 **Install the Device** 33
Rack Compatibility 33
Rack Types 34
Set up Device on Rack or Wall 36
Rack-Mount 36
Wall Mount 43
Install Wall Brackets 43
Wall Mount the Device 44
Ground the Device 45
Install the AC Power Cables 46
Activate an AC Power Supply Module 47
Install the DC Power Cables 48
Activate a DC Power Supply Module 50
Port Connection Guidelines 51
Connect to the Console Port 51
Connect to the Management Ethernet Port 53
Connecting Timing Cables 54
Connecting a Cable to the BITS Interface 54

Connecting Cables to a GPS Interface 55
Connecting a Cable to the Input 10-MHz or 1-PPS Interface 55
Connecting a Cable to the Output 10-MHz or 1-PPS Interface 55
Connecting a Cable to the ToD Interface 55
Connecting a Cable to the GNSS Antenna Interface 56
Install and Remove Transceiver Modules 57
Install and Remove SFP Modules 57
Bale Clasp SFP or SFP+ Module 58
Install a Bale Clasp SFP or SFP+ Module 58
Remove a Bale Clasp SFP or SFP+ Module 59
Install and Remove QSFP+/QSFP28 Transceiver Modules 61
Overview 61
Required Tools and Equipment 62
Install the 100-Gigabit Transceiver Module 62
Attach the Optical Network Cable 64
Remove the 100-Gigabit QSFP28 Transceiver Module 65
Connect Interface Ports 66
Connect a Fiber-Optic Port to the Network 66
Disconnect Optical Ports from the Network 66
Maintain Transceivers and Optical Cables 67

CHAPTER 5 **Configure the Device** 69
Create the Initial Router Configuration 69
Verify Device Installation 71

CHAPTER 6 **Replace Fan Module and Power Supply** 73
Replace Fan Module 73
Replace Power Supply 74
Remove the DC Power Supply Module 75
Install the DC Power Supply Module 76
Remove the AC Power Supply Module 76
Install the AC Power Supply Module 77

APPENDIX A **Appendix** 79

LEDs 79
Router LEDs 79
Fan Assembly LEDs 81
Power Supply LEDs 82
Fan Assembly and Power Supply LED Combination 84
System Specifications 84
Weight and Power Consumption 84
Environmental Specifications 85
Transceiver and Cable Specifications 85
RJ-45 Connectors 85
GPS Port Pinouts 85
Time-of-Day Port Pinouts 86
BITS Interface 86
Management and PTP Ethernet Port Pinouts 87
USB Flash or MEM Port Pinouts 87
Alarm Port Pinouts 88
Console Port Pinouts 89
AC Power Cord Specifications 91

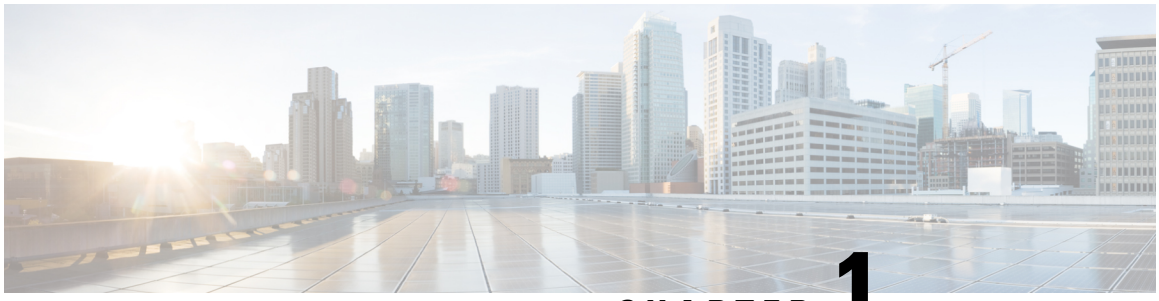

CHAPTER 1

Safety Warnings

This handout lists the safety warnings necessary for handling this chassis. Before you install or service the chassis, review these safety warnings to avoid injuring yourself or damaging the equipment.

For a complete list of translated safety warnings, see the Regulatory Compliance and Safety Information — Cisco NCS 500 Series Routers document.

The safety warnings are grouped under the following sections:

- Standard Warning Statements, on page 1
- Safety Guidelines for Personal Safety and Equipment Protection, on page 2
- Safety Precautions for Module Installation and Removal, on page 2
- Safety with Electricity, on page 3
- Power Supply Considerations, on page 5
- Preventing ESD Damage, on page 6

Standard Warning Statements

Warning IMPORTANT SAFETY INSTRUCTIONS

This warning symbol means danger. You are in a situation that could cause bodily injury. Before you work on any equipment, be aware of the hazards involved with electrical circuitry and be familiar with standard practices for preventing accidents. Use the statement number provided at the end of each warning to locate its translation in the translated safety warnings that accompanied this device. Statement 1071

SAVE THESE INSTRUCTIONS

Warning This unit is intended for installation in restricted access areas. A restricted access area can be accessed only by using a special tool, lock and key, or other means of security. Statement 1017

Warning Ultimate disposal of this product must be handled according to all national laws and regulations. Statement 1040

Warning To prevent the system from overheating, do not operate it in an area that exceeds the maximum recommended ambient temperature of: –40 to 158°F (–40 to 70°C). Statement 1047

Note The operating temperature of Cisco N540-12Z20G-SYS and N540-28Z4C-SYS variants is from 23 to 131°F (-5 to 55°C).

Warning Mount the device on a rack that is permanently affixed to the building. Statement 1049

Warning This device is a Class A Device and is registered for EMC requirements for industrial use. You must be aware. If sold or purchased by mistake, do replace with a residential-use type. Statement 294

Warning Only trained and qualified personnel should be allowed to install, replace, or service this equipment. Statement 1030

Safety Guidelines for Personal Safety and Equipment Protection

The following guidelines ensure your safety and protect the equipment. This list does not include all the potentially hazardous situations. Therefore, you must be alert.

- Before moving the system, always disconnect all power cords and interface cables.
- Never assume that power is disconnected from a circuit; always check.
- Before and after installation, keep the chassis area clean and dust free.
- Keep tools and assembly components away from walk areas where you or others can trip over them.
- Do not work alone if potentially hazardous conditions exist.
- Do not perform any action that creates a potential hazard to people or makes the equipment unsafe.
- Do not wear loose clothing that may get caught in the chassis.
- When working under conditions that may be hazardous to your eyes, wear safety glasses.

Safety Precautions for Module Installation and Removal

Be sure to observe the following safety precautions when you work on the chassis.



Warning Class 1 laser product. Statement 1008



Warning Do not stare into the beam or view it directly with optical instruments. Statement 1011



Warning Invisible laser radiations present. Statement 1016

Safety with Electricity



Warning Before working on a chassis or with power supplies, unplug the power cord on AC units. Disconnect the power at the circuit breaker on DC units. Statement 12



Warning Before working on equipment that is connected to power lines, remove jewelry (including rings, necklaces, and watches). Metal objects heat up when connected to power and ground and can cause serious burns or weld the metal object to the terminals. Statement 43



Warning Avoid using or servicing any equipment that has outdoor connections during an electrical storm. There may be a risk of electric shock from lightning. Statement 1088



Warning Read the installation instructions before connecting the system to the power source. Statement 1004



Warning When you connect or disconnect the power and relay connector with power applied, an electrical arc can occur. This action can cause an explosion in hazardous area installations. Be sure that power is removed from the switch and alarm circuit. Be sure that power cannot be accidentally turned on or verify that the area is nonhazardous before proceeding. Failure to securely tighten the power and relay connector captive screws can result in an electrical arc if the connector is accidentally removed. Statement 1058



Warning The plug-socket combination must be accessible always, because it serves as the main disconnecting device. Statement 1019

Warning This equipment must be grounded. Never defeat the ground conductor or operate the equipment in the absence of a suitably installed ground conductor. Contact the appropriate electrical inspection authority or an electrician if you are uncertain that suitable grounding is available. Statement 1024

Warning This unit may have more than one power supply connection. All connections must be removed to de-energize the unit. Statement 1028

Warning This product requires short-circuit (overturned) protection, to be provided as part of the building installation. Install only in accordance with national and local wiring regulations. Statement 1045

Warning When installing or replacing the unit, ensure the ground connection first and disconnected last. Statement 1046

Warning When you connect or disconnect the power and/or alarm connector with power applied, an electrical arc can occur. This could cause an explosion in hazardous area installations. Be sure that all power is removed from the switch and any other circuits. Be sure that power cannot be accidentally turned on or verify that the area is nonhazardous before proceeding. Statement 1058

Warning This equipment is intended to be grounded to comply with emission and immunity requirements. Ensure that the switch functional ground lug is connected to earth ground during normal use. Statement 1064

Warning Installation of the equipment must comply with local and national electrical codes. Statement 1074

When working on equipment that is powered by electricity, follow these guidelines:

- Locate the room's emergency power-off switch. If an electrical accident occurs, you know where to quickly turn off the power.
- Before starting work on the system, turn off the DC main circuit breaker and disconnect the power terminal block cable.
- Disconnect all power when:
  - Working on or near power supplies
  - Installing or removing a device chassis or network processor module
  - Performing most hardware upgrades

- Never install equipment that appears damaged.
- Carefully examine your work area for possible hazards, such as moist floors, ungrounded power extension cables, and missing safety grounds.
- Never assume that power is disconnected from a circuit; always check.
- Never perform any action that creates a potential hazard to people or makes the equipment unsafe.
- If an electrical accident occurs and you are uninjured:
  - Use caution to avoid injuring yourself.
  - Turn off power to the device.
  - Seek medical attention, if necessary.

Use the following guidelines when working with any equipment that is disconnected from a power source, but connected to telephone wiring or network cabling:

- When installing or modifying telephone lines, use caution.
- Never install telephone jacks in wet locations unless the jack is designed to handle such locations.
- Never install telephone wiring during a lightning storm.

Power Supply Considerations

Check the power at your site to ensure that you are receiving clean power (free of spikes and noise). If necessary, install a power conditioner.

Power Connection Guidelines

This section provides guidelines for connecting the device power supplies to the site power source.



Warning Never defeat the ground conductor or operate the equipment in the absence of a suitably installed ground conductor. Contact the appropriate electrical inspection authority or an electrician if you are uncertain that suitable grounding is available. Statement 1024



Warning The plug-socket combination must be accessible always because it serves as the main disconnecting device. Statement 1019



Warning This product requires short-circuit (overcurrent) protection, to be provided as part of the building installation. Install only in accordance with national and local wiring regulations. Statement 1045

Guidelines for DC-Powered Systems

Basic guidelines for DC-powered systems include the following:

- Each chassis power supply has its own dedicated input power source. The source must comply with the safety extra-low voltage (SELV) requirements in the UL 60950, CSA 60950, EN 60950, and IEC 60950 standards.
- Protect the circuit by a dedicated two-pole circuit breaker. Ensure that the circuit breaker is sized according to the power supply input rating and local or national code requirements.
- The circuit breaker is considered as the disconnect device and is easily accessible.
- The system ground is the power supply and chassis ground.
- Use the grounding lug to attach a wrist strap for ESD protection during servicing.
- Do not connect the DC return wire to the system frame or to the system-grounding equipment.
- Ensure that the DC return is grounded at the source side.

Guidelines for AC-Powered Systems

Basic guidelines for AC-powered systems include the following:

- Each chassis power supply has its own dedicated branch circuit.
- Ensure that the circuit breaker is sized according to the power supply input rating and local or national code requirements.
- The AC power receptacles that are used to plug in the chassis must be the grounding type. The grounding conductors that connect to the receptacles must connect to protective earth ground at the service equipment.

Prevent Power Loss

Use the following guidelines to prevent power loss to the device:

- To prevent input power loss, ensure that the maximum load on each circuit supplying the power is within the current ratings of the wiring and breakers.
- In some systems, you can use an UPS to protect against power failures at your site. Avoid UPS types that use ferroresonant technology. These UPS types can become unstable with systems such as the device, which can have substantial current-draw fluctuations due to bursty data traffic patterns.

Determining power requirements is useful for planning the power distribution system to support the device.

Preventing ESD Damage



Warning Ground this equipment. Use a green and yellow 6-AWG ground wire to connect the host to earth ground during normal use. Statement 383

Electrostatic Discharge (ESD) can damage equipment and impair electrical circuitry. ESD may occur when electronic printed circuit cards are improperly handled and can cause complete or intermittent failures. When removing and replacing modules, always follow these ESD prevention procedures:

- Ensure that the device chassis is electrically connected to earth ground.

- Wear an ESD-preventive wrist strap, ensuring that it makes good skin contact. To channel unwanted ESD voltages safely to ground, connect the clip to an unpainted surface of the chassis frame. To guard against ESD damage and shocks, the wrist strap and cord must operate effectively.
- If no wrist strap is available, ground yourself by touching a metal part of the chassis.
- When installing a component, use any available ejector levers or captive installation screws to properly seat the bus connectors in the backplane or midplane. These devices prevent accidental removal, provide proper grounding for the system, and help to ensure that bus connectors are properly seated.
- When removing a component, use available ejector levers or captive installation screws, if any, to release the bus connectors from the backplane or midplane.
- Handle components by only their handles or edges; do not touch the printed circuit boards or connectors.
- Place a removed component board side up on an antistatic surface or in a static-shielding container. If you plan to return the component to the factory, immediately place it in a static-shielding container.
- Avoid contact between the printed circuit boards and clothing. The wrist strap only protects components from ESD voltages on the body; ESD voltages on clothing can still cause damage.
- Never attempt to remove the printed circuit board from the metal carrier.

For the safety of your equipment, periodically check the resistance value of the antistatic wrist strap. Maintain the value between 1 and 10 Mohm.

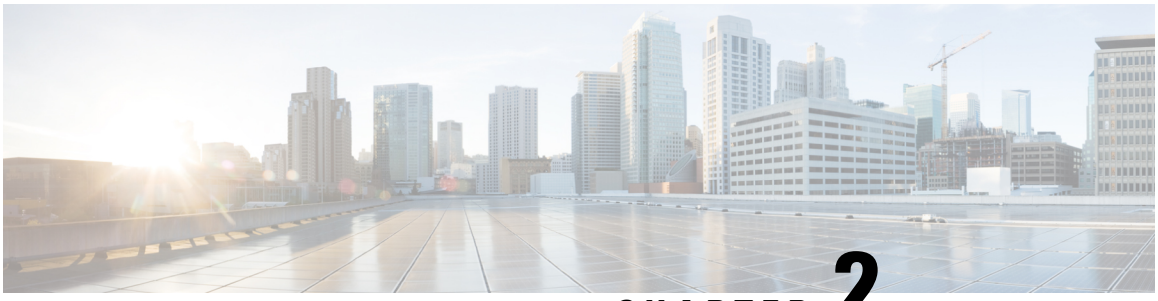

CHAPTER 2

Cisco NCS 540 Router Overview

The Cisco NCS 540 1RU router complements Cisco's offerings for IP RAN solutions for the GSM, UMTS, LTE, and CDMA.

The Cisco NCS 540 includes the following variants.

Table 1: Cisco NCS 540 Variants

Variant	Conformal Coating
N540-24Z8Q2C-SYS	No
N540X-ACC-SYS	Yes[1]
N540-ACC-SYS	No
N540-28Z4C-SYS-A N540-28Z4C-SYS-D	No
N540-12Z20G-SYS-A N540-12Z20G-SYS-D	No
N540X-12Z16G-SYS-A N540X-12Z16G-SYS-D	Yes
N540X-16Z4G8Q2C-A N540X-16Z4G8Q2C-D	Yes

[1] The printed circuit boards are conformal coated to provide enhanced protection against moisture, dust and corrosive gas. For additional information and deployment conditions, we recommend you to contact our Cisco support team.

Note The Cisco N540-24Z8Q2C-SYS, N540X-ACC-SYS, N540-ACC-SYS, N540-28Z4C-SYS-A/D, N540-12Z20G-SYS-A/D, N540X-12Z16G-SYS-A/D and N540X-16Z4G8Q2C-A/D are collectively referred to as the Cisco NCS 540 Router in this document. Any differences between the routers are specifically called out.

For more information on its features and benefits, see the Cisco Network Convergence System 540 Router Data Sheet.

- Network Interfaces, on page 10
- Specification, on page 12
- Interface Naming, on page 12
- Network Timing Interfaces, on page 14
- GNSS, on page 15
- External Alarm Inputs, on page 16
- Console, on page 16
- Online Insertion and Removal, on page 16
- Supported Transceiver Modules, on page 17

Network Interfaces

The Cisco NCS 540 1RU Router has the following hardware features:

- 24 x 10G SFP+ Ports
  - Support DWDM & ZR Optics
- 8 x 25G SFP+ Ports
- 2 x 100G QSFP28 Ports

Figure 1: Cisco N540-ACC-SYS

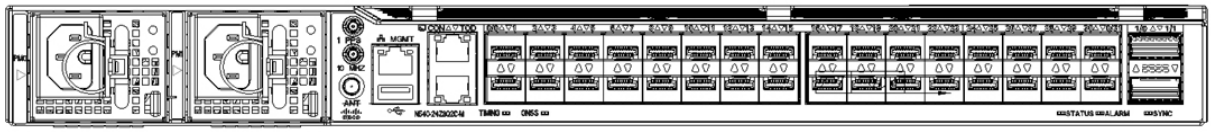

Note All ports are color coded in the chassis for ease of access; for example, the 10G SFP+ Ports are in pink, the 25G SFP+ Ports are in yellow, and the 100G QSFP28 Ports are in green.

The Cisco N540-28Z4C-SYS-A/D 1RU Router has the following hardware features:

- 28 x 1G/10G SFP+ Ports
- 4 x 100G QSFP28 Ports with Non MACsec

Figure 2: Cisco N540-28Z4C-SYS-A

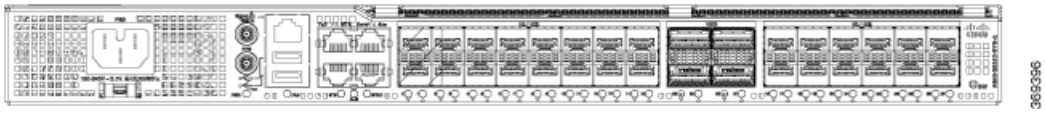

Figure 3: Cisco N540-28Z4C-SYS-D

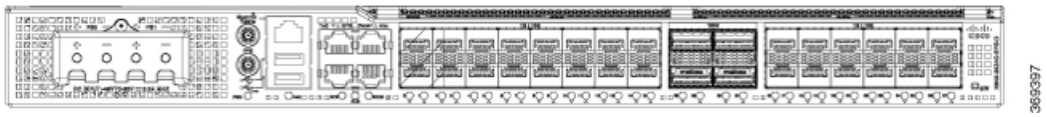

The Cisco N540-12Z20G-SYS-A/D 1RU Router has the following hardware features:

- 20 x 1G SFP+ Ports
- 12 x 1G/10G SFP+ Ports

Figure 4: Cisco N540-12Z20G-SYS-A



Figure 5: Cisco N540-12Z20G-SYS-D

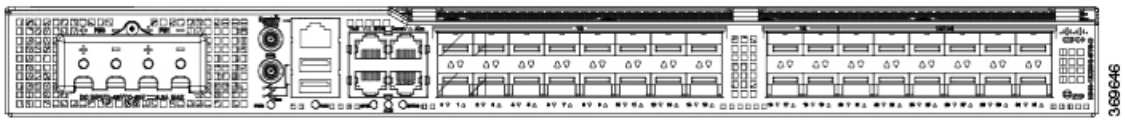

The Cisco N540X-12Z16G-SYS-A/D 1RU Router has the following hardware features:

- 12 x 1G SFP+ Ports
- 12 x 10G/1G SFP+ Ports
- 4 x 1G Copper Ports

Figure 6: Cisco N540X-12Z16G-SYS-A

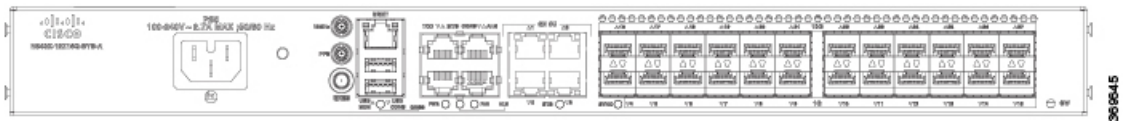

Figure 7: Cisco N540X-12Z16G-SYS-D

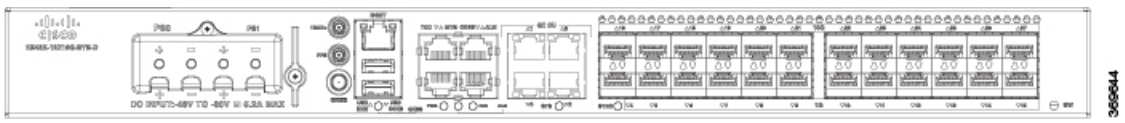

The Cisco N540X-16Z4G8Q2C-A/D 1RU Router has the following hardware features:

- 4 x 1G Copper Ports
- 16 x 1G/10G SFP+ Ports
- 8 x 10G/25G SFP+ Ports

- 2 x 100G QSFP Ports

Figure 8: Cisco N540X-16Z4G8Q2C-A

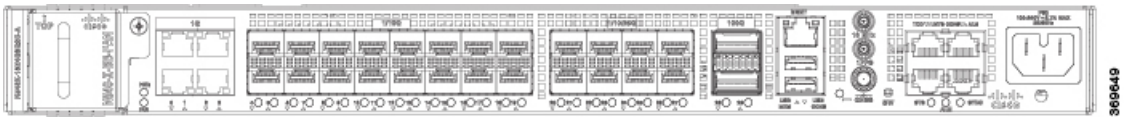

Figure 9: Cisco N540X-16Z4G8Q2C-D



Specification

For information on physical specification, temperature, Route Processor, and other details for all variants, see *Cisco NCS 540 chassis specification* in the Cisco Network Convergence System 540 Router Data Sheet.

Interface Naming

The following table shows the interface naming of the Cisco N540-24Z8Q2C-SYS, N540X-ACC-SYS, and N540-ACC-SYS variants:

Table 2: Port Numbering

1G/10G Dual rate ports (SFP+)			1G/10G/25G Dual rate ports (SFP28)			40G/100G ports (QSFP28)
0/0	to	22	24	to	30	1/0
1		23	25		0/31	1/1

The *interface-path-id* is *rack*/*slot*/*module*/*port*. The slash between values is required as part of the notation.

- **GigE** — 0/0/0/0 - 0/0/0/31
- **TenGigE** — 0/0/0/0 - 0/0/0/31
- **TwentyFiveGigE** — 0/0/0/24 - 0/0/0/31
- **FortyGigE** — 0/0/1/0 - 0/0/1/1
- **HundredGigE** — 0/0/1/0 - 0/0/1/1

Note Dual-Rate functionality is supported only with the Supported SFP.

Table 3: Maximum Number of Inerfaces

Category	Maximum Interface	Port Number
100ME copper	24	0/0 - 23
1GE	32	0/0 - 31
10GE	32 / 40*[2]	0/0 - 31, 1/0 - 1*
25GE	8 / 16*	0/24 - 31, 1/0 - 1*
40GE	2	1/0 - 1
100GE	2	1/0 - 1

[2] *4x10GE or 4x25GE option

The following table shows the interface naming of the Cisco N540-28Z4C-SYS-A/D, N540-12Z20G-SYS-A/D, N540X-12Z16G-SYS-A/D and N540X-16Z4G8Q2C-A/D variants:

Table 4: Port Numbering of Cisco N540-28Z4C-SYS-A/D

1G/10G Dual rate ports (SFP+)	100G ports (QSFP28)
0/0 to 0/27	0/28 to 0/31

- **GigE** — 0/0/0/0 - 0/0/0/27
- **TenGigE** — 0/0/0/0 - 0/0/0/27
- **HundredGigE** — 0/0/0/28 - 0/0/0/31

Table 5: Port Numbering of Cisco N540X-12Z16G-SYS-A/D

1G Copper ports	1G ports (SFP)	10G ports (SFP+)
0/0 to 0/3	0/4 to 0/15	0/16 to 0/27

- **GigE** — 0/0/0/4 - 0/0/0/15
- **TenGigE** — 0/0/0/16 - 0/0/0/27

Table 6: Port Numbering of Cisco N540-12Z20G-SYS-A/D

1G ports (SFP)	1G/10G Dual rate ports (SFP+)
0/0 to 0/31	0/20 to 0/31

- **GigE** — 0/0/0/0 - 0/0/0/31
- **TenGigE** — 0/0/0/20 - 0/0/0/31

Table 7: Port Numbering of Cisco N540X-16Z4G8Q2C-A/D

1G Copper ports	1G/10G Dual rate ports (SFP+)	1G/10G/25G Dual rate ports (SFP28)	100G ports (QSFP28)
0/0 to 0/3	0/4 to 0/19	0/20 to 0/27	0/28 and 0/29

- **GigE** — 0/0/0/4 - 0/0/0/27
- **TenGigE** — 0/0/0/20 - 0/0/0/27
- **TwentyFiveGigE** — 0/0/0/20 - 0/0/0/27
- **HundredGigE** — 0/0/0/28 - 0/0/0/29

Network Timing Interfaces

- BITS input or output—The BITS interfaces support clock recovery from either a T1 at 1.544MHz or an E1 at 2.048MHz, configurable by software. BITS interface is provided through a standard RJ-48 connector on the front panel.
- 1PPS input or output and ToD input or output—This shielded RJ-45 interface is used for input or output of time-of-day (ToD) and 1PPS pulses. ToD format includes both NTP and IEEE 1588-2008 time formats.

The same RS422 pins for 1PPS and TOD are shared between input and output directions. The direction for each can be independently configurable through software.

Use an SMB connector on the front panel for the following:

- GPS 10Mhz input and output—10MHz input for GPS synchronization.
- GPS 1 PPS input and output—1 PPS input for GPS synchronization.

GNSS

The GNSS port is present at the front panel.

GNSS module has an in-built ESD protection on all pins, including the RF-input pin. However, additional surge protection is required if an outdoor antenna is to be connected. The Lightning Protector must support a low clamping voltage (less than 600V).

A lightning protection must be mounted at the place where the antenna cable enters the building. The primary lightning protection must be capable of conducting all potentially dangerous electrical energy to Protective Earth (PE).

Surge arrestor must support DC-pass and suitable for the GPS frequency range (1.575GHz) with low attenuation.

GNSS Module RF Input Requirements

- For optimal performance, the GNSS module requires an active GPS/GNSS antenna with built-in Low-Noise Amplifier (LNA). The antenna LNA amplifies the received satellite signals for two purposes:
  - Compensation of losses on the cable
  - Lifting the signal amplitude to the suitable range for the receiver frontend

  The Amplification required is 22dB gain + cable/connector loss + Splitter signal loss.

  The recommended range of LNA gain (minus all cable and connector losses) at the connector of the receiver module is 22dB to 30dB with a minimum of 20dB and a maximum of 35dB.

- GNSS module provides 5V to the active antenna through the same RF input.
- Surge requirement:
  - GNSS modules have built-in ESD protections on all pins, including the RF-input pin. However, additional surge protection may be required if rooftop antennas are to be connected, to meet the regulations and standards for lightning protection of countries where the end-product is installed.
  - A lightning protection must be mounted at the place where the antenna cable enters the building. The primary lightning protection must be capable of conducting all potentially dangerous electrical energy to PE.
  - Surge arrestors should support DC-pass and suitable for the GPS frequency range (1.575GHz) with low attenuation.

- Antenna Sky visibility:
  - GPS signals can only be received on a direct line of sight between antenna and satellite. The antenna must have a clear view of the sky. For proper timing, minimum of four satellites should be locked.



Note The antenna terminal should be earthed at the building entrance in accordance with the ANSI/NFPA 70, the National Electrical Code (NEC), in particular Section 820.93, Grounding of Outer Conductive Shield of a Coaxial Cable.

- Use a passive splitter if more than one GNSS modules are fed from a single antenna.

Note The splitter should have all the RF ports capable of DC-pass, if the antenna needs to feed power from GNSS module.

External Alarm Inputs

The router supports four dry contact alarm inputs through an RJ-45 jack at the rear panel.

- Normally Open—indicates that no current flows through the alarm circuit and the alarm is generated when the current is flowing.

Each alarm input can be provisioned as critical, major, or minor.

Console

The RS232 console port provides transmission (Tx), reception (Rx), and ground (Gnd).

USB Console

A single USB 2.0 Type-A receptacle on the front panel of the router provides console access to ROMMON, Cisco IOS-XR and diagnostics. While it uses the Type-A connector, it operates as a USB peripheral only for connection to an external host computer. This interface requires the use of a Type-A to Type-A connector instead of a standard USB cable.

Note Use of the USB console is mutually exclusive of the RS232 console port. This interface requires the use of a Type-A to Type-A USB cable.

Online Insertion and Removal

The router supports the following Online Insertion and Removal (OIR) operations:

- When an SFP is removed, there is no effect on traffic flowing on other ports.
- When an SFP is installed, the system initializes that port for operation based on the current configuration. If the inserted SFP is incompatible with the current configuration of that port, the port does not become operational until the configuration is updated.
- When both power supplies are installed and active, the load may be shared between them or a single PSU supports the whole load. When a power supply is not working or the input cable is removed, the remaining power supply takes the entire load without disruption.

Supported Transceiver Modules

For more information on the supported transceiver modules, see Transceiver Module Group (TMG) Compatibility Matrix. In the **Begin your Search** search box, enter the keyword NCS540 and click Enter.

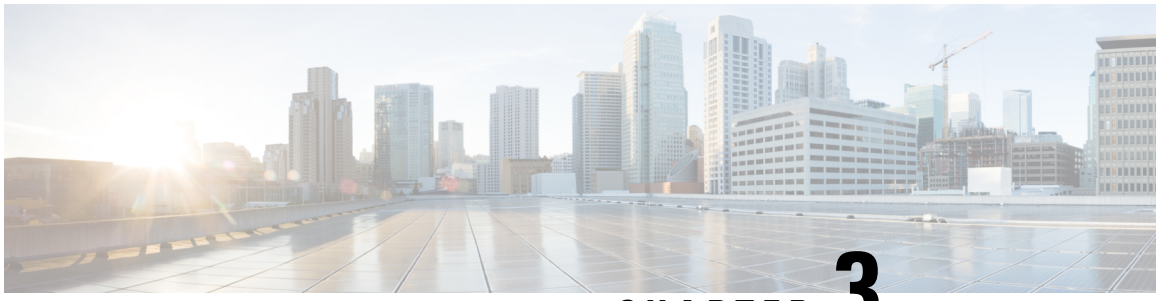

CHAPTER 3

Prepare for Installation

Before you install the Cisco NCS 540, you must prepare your site for the installation.

Preparing your site involves these tasks:

- General Precautions, on page 19
- Site Planning Checklist, on page 20
- Environmental Requirements, on page 20
- Airflow Guidelines, on page 20
- Site Power Guidelines, on page 23
- Site Cabling Guidelines, on page 24
- Tools and Equipment, on page 25
- Prepare Your Location , on page 25
- Prepare Yourself , on page 26
- Prepare Rack for Router Installation, on page 27
- Cabinet Selection Guidelines, on page 28
- Unpack the Cisco NCS 540 Router, on page 29

General Precautions

Observe the following general precautions when using and working with your chassis:

- Keep your system components away from radiators and heat sources, and do not block cooling vents.
- Do not spill food or liquids on your system components, and never operate the product in a wet environment.
- Do not push any objects into the openings of your system components. Doing so can cause fire or electric shock by shorting out interior components.
- Position system cables and power supply cable carefully. Route system cables and the power supply cable and plug so that they are not stepped on or tripped over. Ensure that nothing is rests on your system component cables or power cable.
- Do not modify power cables or plugs. Consult a licensed electrician or your power company for site modifications. Always follow your local and national wiring rules.
- If you turn off your system to avoid damage to the system components, wait at least 30 seconds before turning it on again.

Site Planning Checklist

Use the following checklist to carry out all site planning tasks:

- The site meets environmental requirements.
- The site's air conditioning system can compensate for the heat dissipation of the chassis.
- The floor space that the chassis occupies can support the weight of the system.
- Electrical service to the site complies with the safety with electricity requirements.
- The electrical circuit servicing the chassis complies with the power supply requirements.
- Console port wiring and cabling limitations have been considered in accordance to TIA/EIA-232F.
- The chassis Ethernet cabling distances are within prescribed limits.
- The equipment rack where the chassis is to be installed complies with prescribed requirements.
- The following factors have been carefully considered when selecting rack: location, safety, ease of maintenance, and proper airflow.

Environmental Requirements



Note The outside plant installation is not supported on Cisco N540-28Z4C-SYS-A/D, and N540-12Z20G-SYS-A/D routers.

For outside plant installation (cell site cabinet, hut, and so on), you must protect the router against airborne contaminants, dust, moisture, insects, pests, corrosive gases, polluted air, or other reactive elements. Sealed equipment chamber with air-conditioning or a heat exchanger is recommended for OSP deployments. The equipment chamber must comply with the temperature and clearance requirements. To achieve this level of protection, we recommend that the unit be installed in a fully sealed enclosure or cabinet. Examples of such cabinets include IP65 cabinets with heat exchanger complying with Telcordia GR487. Temperature must be maintained within –40ºC to 70ºC.

For more information on Environmental properties and Regulatory standards, see the Cisco Network Convergence System 540 Router Data Sheet.

Airflow Guidelines

Cool air is circulated through the router by fans that are located along the back side of the router. The internal fans maintain acceptable operating temperatures for the internal components by drawing in cool air through the vents, and circulating the air through the router.

To ensure adequate airflow, it is recommended that you maintain a minimum clearance distance always, as mentioned in the following figure.

- Front clearance—5 inches (12.7 centimeters)

- Rear clearance—2 inches (5.08 centimeters)

Figure 10: Top View of Clearance

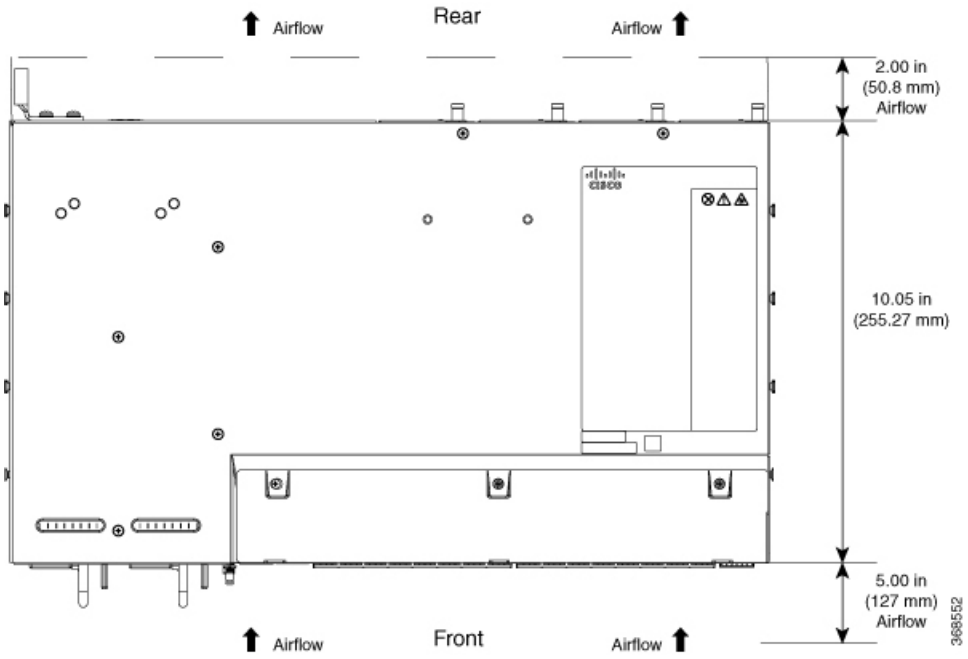

Figure 11: Side View of Clearance

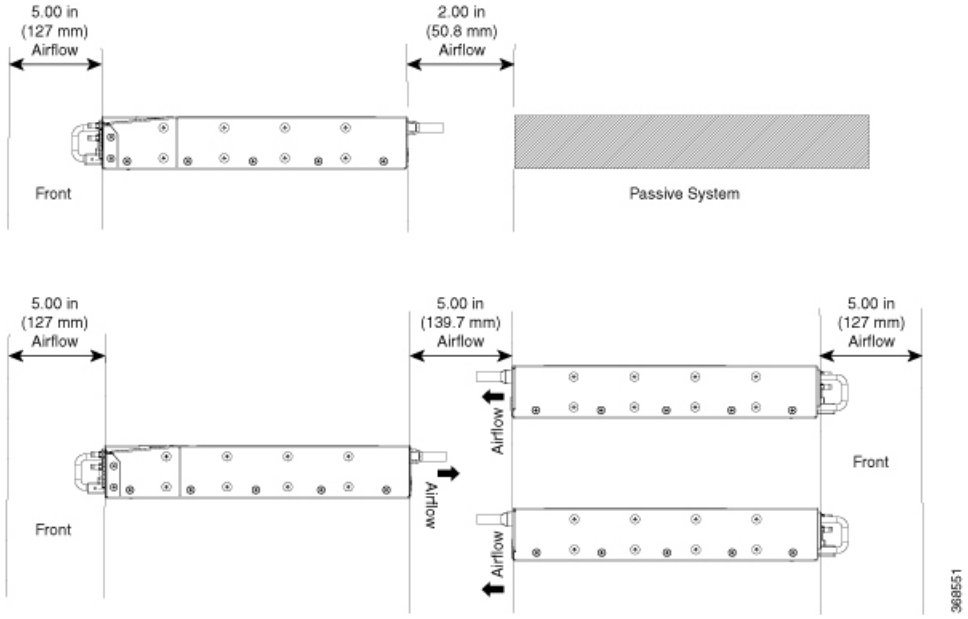

Figure 12: Airflow Side View

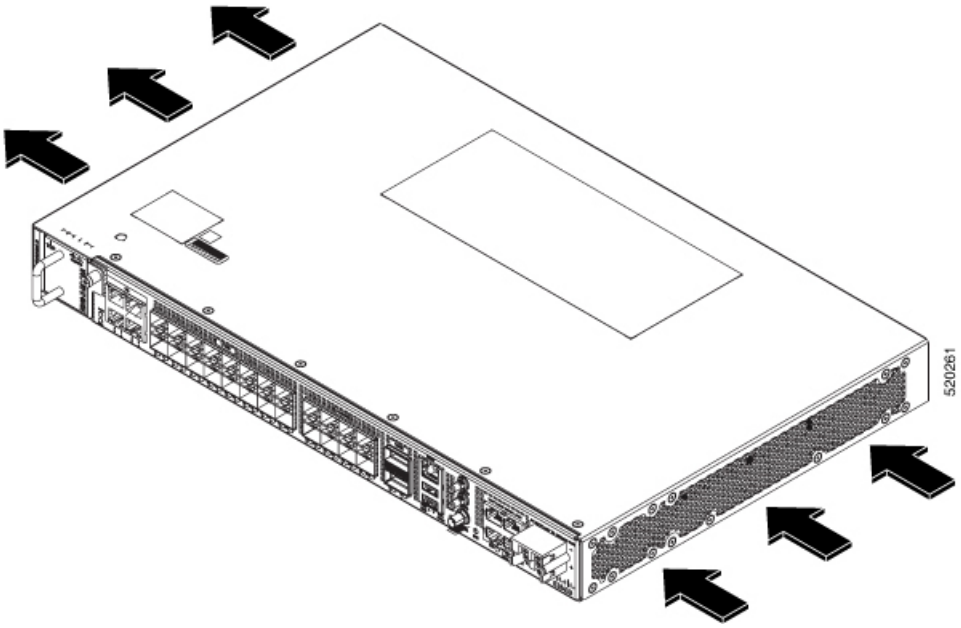

Table 8: Airflow Guidelines

Router	Flow Direction	Air Clearance
N540X-16Z4G8Q2C-A N540X-16Z4G8Q2C-D N540X-12Z16G-SYS-A N540X-12Z16G-SYS-D	Right to Left	At least 3 inches (7.62 centimeters) required on both inlet and exit directions.

Note the following points:

- When installing the router in a back-to-back position with another device, ensure that there is a minimum of 3.9 inches (10 centimeters) airflow clearance between the two devices.
- If airflow through the equipment rack and the routers that occupy it is blocked or restricted, or if the ambient air being drawn into the rack is too warm, an overtemperature condition may occur within the rack and the routers that occupy it.
- The site must be as dust-free as possible. Dust tends to clog the router fans, reducing the flow of cooling air through the equipment rack and the routers that occupy it, thus increasing the risk of an overtemperature condition.
- Enclosed racks must have adequate ventilation. Ensure that the rack is not congested because each router generates heat. An enclosed rack must have louvered sides and a fan to provide cooling air. The equipment generates heat near the bottom of the rack, which can be drawn upward into the intake ports of the equipment above.
- When mounting a router in an open rack, ensure that the rack frame does not block the exhaust fans.

- When rack-installed equipment fails, especially equipment in an enclosed rack, try operating the equipment by itself, if possible. Power off all the other equipment in the rack (and in adjacent racks) to give the router maximum cooling air and clean power.
- Avoid installing the router in a location in which the router air intake vents may draw in the exhaust air from adjacent equipment. Consider how the air flows through the router; the airflow direction is front to back, with ambient air drawn in from the vents located on the sides of the router.

Site Power Guidelines

The chassis has specific power and electrical wiring requirements. Adhering to these requirements ensures reliable operation of the system. Follow these precautions and recommendations when planning your site power for the chassis:

- The redundant power option provides a second, identical power supply to ensure uninterrupted power supply.

Note Applicable only to Cisco N540-24Z8Q2C-SYS, N540X-ACC-SYS, and N540-ACC-SYS routers.

- Connect each power supply to a separate input power source. Otherwise, it results in total power failure to the system due to a fault in the external wiring or a tripped circuit breaker.
- To prevent loss of input power, ensure that the maximum load on each circuit is within the current ratings of the wiring and the breakers.
- Check the power at your site before installation, and periodically after installation, to ensure that you are receiving clean power. If necessary, install a power conditioner.
- Provide proper grounding to avoid personal injury and damage to the equipment due to power surges or lightning striking power lines. The chassis ground must be attached to a central office or other interior ground system.

Warning This product requires short-circuit (overcurrent) protection to be provided as part of the building installation. Install only in accordance with national and local wiring regulations. Statement 1045

Caution This product requires external surge protection device for both AC and DC power feeds to the equipment. For DC power feed, the surge protective device (SPD) must handle common mode and differential mode surge as per the local standards.

Note The chassis installation must comply with all the applicable codes, and is approved for use with only copper conductors. The ground bond-fastening hardware must be compatible and preclude loosening, deterioration, and electrochemical corrosion of hardware and joined material. Attachment of the chassis ground to a central office or other interior ground system must be made with a 6-AWG gauge wire copper ground conductor.

Electrical Circuit Requirements

Each chassis requires a dedicated electrical circuit. If you equip the device with dual-power feeds, provide a separate circuit for each power supply to avoid compromising the power redundancy feature.

The chassis supports both DC source or an AC source. Ensure that equipment grounding is present and observe power-strip ratings. Make sure that the total ampere rating of all the products plugged into the power strip does not exceed 80% of the rating.

Site Cabling Guidelines

This section contains guidelines for wiring and cabling at your site. When preparing your site for network connections to the router, consider the type of cable required for each component, and the cable limitations. Consider the distance limitations for signaling, ElectroMagnetic Interference (EMI), and connector compatibility. Possible cable types are fiber, thick or thin coaxial, foil twisted-pair, or unshielded twisted-pair cabling.

Also consider any additional interface equipment you need, such as transceivers, hubs, switches, modems, Channel Service Units (CSU), or Data Service Units (DSU).

Before you install the router, have all the additional external equipment and cables on hand. For information about ordering, contact a Cisco customer service representative.

The extent of your network and the distances between the network interface connections depend, in part, on the following factors:

- Signal type
- Signal speed
- Transmission medium

The distance and rate limits referenced in the following sections are the IEEE-recommended maximum speeds and distances for signaling purposes. Use this information as a guideline when planning your network connections *prior to* installing the router.

If wires exceed the recommended distances, or if wires pass between buildings, give special consideration to the effect of a lightning strike in your vicinity. The electromagnetic pulse caused by lightning or other high-energy phenomena can easily couple enough energy into unshielded conductors to destroy electronic devices. If you have had problems of this sort in the past, you may want to consult experts in electrical surge suppression and shielding.

Asynchronous Terminal Connections

The router provides a console port to connect a terminal or computer for local console access. The router supports RS-232 asynchronous data with distance recommendations specified in the IEEE RS-232 standard.

Interference Considerations

When wires are run for any significant distance, there is a risk that stray signals will be induced on the wires as interference. If interference signals are strong, they may cause data errors or damage to the equipment.

The following sections describe the sources of interference and how to minimize their effects on the router system.

Tools and Equipment

You need the following tools and equipment to install and upgrade the device and its components:

- ESD-preventive cord and wrist strap
- Antistatic mat or antistatic foam
- Number 1 and Number 2 Phillips-head screwdrivers
- #12-24 pan-head screws to secure the device to the equipment rack
- Cables for connecting to network ports (based on the configuration)
- Ethernet hub, switch, or PC with a network interface card for connecting to the Ethernet ports
- Console terminal that is configured for 115200 baud, 8 data bits, no parity, no flow control, and 2 stop bits
- Console cable for connecting to the console port
- Ratcheting torque screwdriver with a Phillips head that exerts up to 30-pound force per square inch (0.02-kilograms force per square millimeter (kgf/mm2)) of pressure
- Crimping tool as specified by the ground lug manufacturer
- Wire-stripping tools for stripping both 6 and 14-AWG wires
- Tape measure and level
- Ratcheting torque screwdriver with a Phillips head that exerts up to 15 inch-pounds (1.69 newton meters) of torque for attaching the ground wire to the device

Prepare Your Location

This section illustrates how the building that houses the chassis must be properly grounded to the earth ground.

Figure 13: Building with Rack Room Connected to Earth Ground

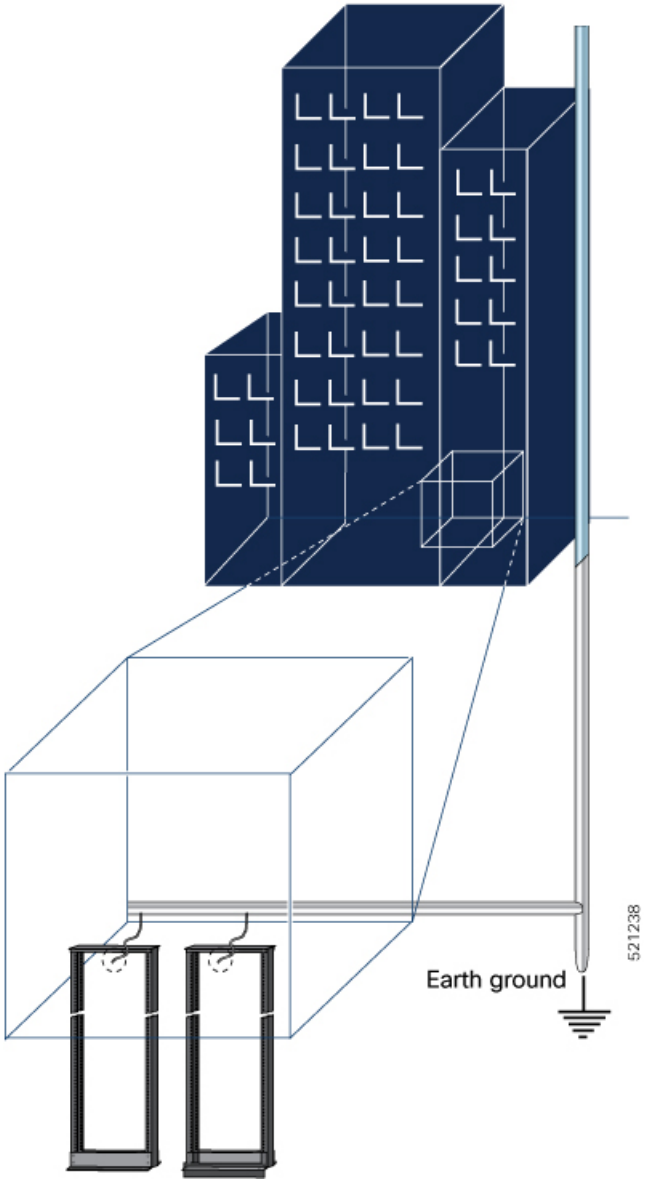

Prepare Yourself

This section illustrates how to prepare yourself before removing the chassis from the sealed antistatic bag. The figures show how to wear the ESD strap around the wrist and how to connect the other end of the strap to the ground. ESD wrist straps are the primary means of controlling static charge on personnel.

Note: These images are for only representation purposes. The chassis' actual appearance and size would vary.

Figure 14: Wearing the ESD Strap

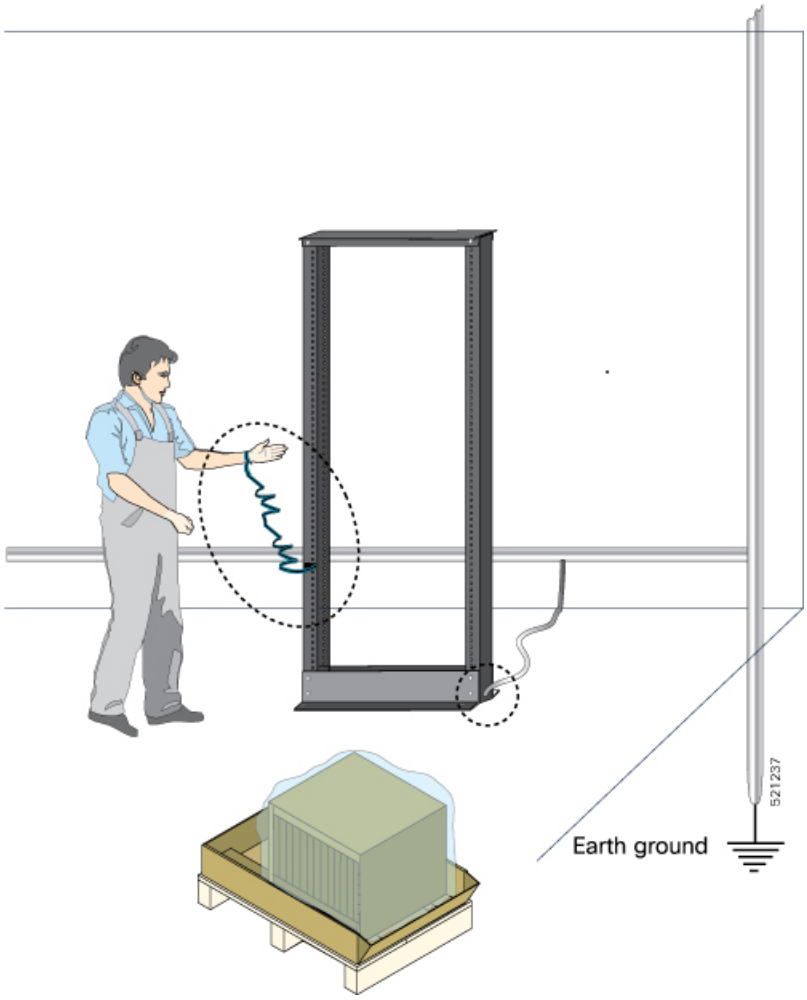

Prepare Rack for Router Installation

Install the chassis into a two-post standard rack with standard horizontal mounting rails. Before you mount the chassis into the rack, we recommend that you do the following:

Step 1 Place the rack where you plan to install the chassis. Ensure that the rack is grounded to earth.

Step 2 Secure the rack to the floor.

To bolt the rack to the floor, a floor bolt kit (also called an anchor embedment kit) is required. For information on bolting the rack to the floor, consult a company that specializes in floor mounting kits (such as Hilti; see Hilti.com for details). Make sure that floor mounting bolts are accessible, especially if an annual retorquing of bolts is required.

Cabinet Selection Guidelines

Equipment intended for installation in controlled environmental space have average yearly levels of contamination. Ventilated cabinets or racks can be used if pollutant levels are maintained within allowable limits.

Equipment intended for installation in outside platnt (OSP) areas must have sealed cabinets with heat exchanger that meet the NEMA -4 or IP66 protection and low average yearly levels of concentration of contaminants inside the cabinet.

Note Ventilated cabinets and racks are not recommended for OSP applications.

Table 9: Cabinet Type for Indoor and Outdoor Installation

Cabinet Type	Suitable for Indoor Installation?	Suitable for Outdoor Installation?
Open rack with no front and rear doors	Yes	No
Ventilated cabinets with normal air filter at intake and fans	Yes	No
Sealed cabinets with heat exchanger that meet NEMA -4 or IP66 protection	Yes	Yes
Sealed cabinets with air-conditioners that meet NEMA -4 or IP66 protection	Yes	Yes

Allowable limits for Environmental Pollutants

Concentration of pollutant levels in outdoor and indoor environment must be less than pollutant levels mentioned in Table 2.3 and Table 2.4 of *NEBS GR-63-CORE Issue 5 Dec 2017*, respectively. High concentration of pollutants have a negative impact on the equipment life time.

Allowable Temperature and Humidity

Maximum allowable temperature and humidity levels must be within the values mentioned in the data sheets. We do not recommend that you have installation where condensation may occur, or where equipment is exposed to high humidity for long time, such as near the sea, rivers, and large water bodies.

Installations in Highly-corrosive Environment

Installation in highly corrosive areas is not recommend. Examples of highly corrosive area are seashore, less than 10 meters from high traffics roadway, and areas having high industrial pollutants.

Periodic Measurement of Environmental Pollutants

We recommend that you check concentration of pollutants periodically. Necessary protection should be provided to ensure the equipment is not exposed to high concentration level of pollutants.

Unpack the Cisco NCS 540 Router

Before you begin

Ensure that there is sufficient room around the chassis pallet for unpacking.

Step 1 Remove the accessory tray and the packing material.

Step 2 Carefully set the packing material aside.

Tip Be sure to save the packaging in case you need to return any of the components products.

Note These images are for only representation purposes. The chassis' actual appearance and size would vary.

Figure 15: Unpacking the Device

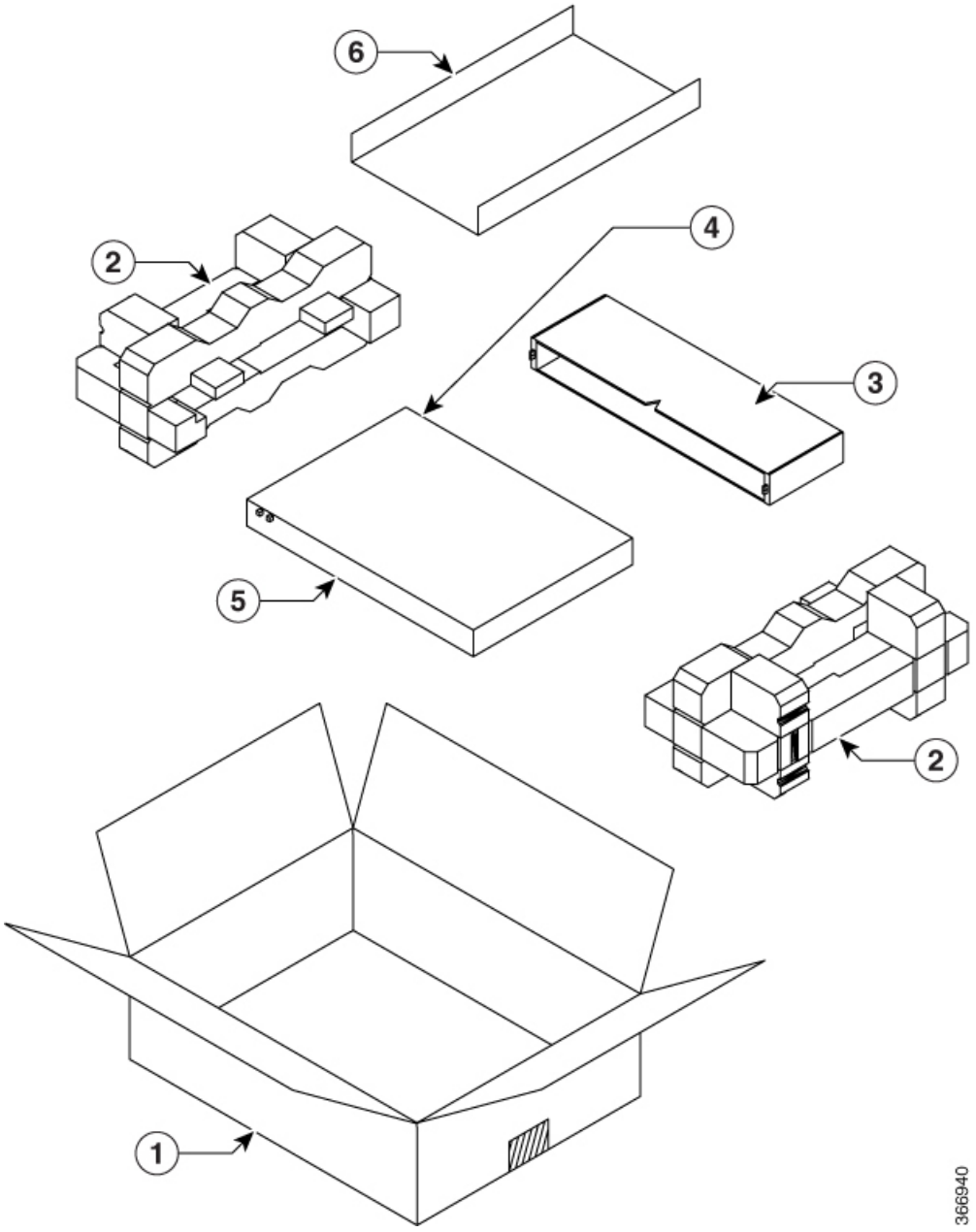

1	Regular Slotted Container (shipping box)	2	Foam end caps
3	Front corrugated cap	4	Front end of the product
5	Back end of the product	6	Accessory tray

What to do next

Table 10: Accessories Kit

Category	N540-28Z4C-SYS-A/D	N540-12Z20G-SYS-A/D	N540X-16Z4G8Q2C-A/D	N540X-12Z16G-SYS-A/D
19-inch rack mount brackets	N540-RCKMT-19-CLA / N540-RCKMT-19-CLD	N540-RCKMT-19-CLA / N540-RCKMT-19-CLD	N540-RCKMT-19-EGA / N540-RCKMT-19-EGD	N540-RCKMT-19-AC N540-RCKMT-19-AC
23-inch rack mount brackets	N540-RCKMT-23-CLA / N540-RCKMT-23-CLD	N540-RCKMT-23-CLA / N540-RCKMT-23-CLD	N540-RCKMT-23-EGA / N540-RCKMT-23-EGD	N540-RCKMT-23-AC N540-RCKMT-23-AC
ETSI rack mount brackets	N540-RCKMT-ETSI-CLA / N540-RCKMT-ETSI-CLD	N540-RCKMT-ETSI-CLA / N540-RCKMT-ETSI-CLD	N540-RKMT-ETSI-EGA / N540-RKMT-ETSI-EGD	N540-RCKMT-ETSI-AC / N540-RCKMT-ETSI-AC
Wall mount brackets	N540-WALLMT-CLA	N540-WALLMT-CLA	Not supported	Not supported
Cable management brackets	N540-CBL-BRKT-CL	N540-CBL-BRKT-DN	N540-CBL-BRKT-EG	N540-CBL-BRKT-AC

Note Most Cisco documentation is available online. The chassis Pointer Card that is shipped with your Cisco NCS 500 Series Services Routers contains links and information to other online documentation.

Note If the product is not in use, store the device in the initial packaged condition or in an ESD PE sealed bag with silica gel.

The following accessories kit is applicable to the Cisco N540-24Z8Q2C-SYS, N540X-ACC-SYS, and N540-ACC-SYS variants.

Table 11: Accessories Kit

Category	Model
Cable management brackets	N540-CBL-GD-19 N540-CBL-GD
19-inch rack mount brackets	N540-RCKMT-19
23-inch rack mount brackets	N540-RCKMT-23

Category	Model
ETSI rack mount brackets	N540-RCKMT-ETSI
Sliders	NC540-ACC-SL1
Air filter	NC540-FLTR-FW

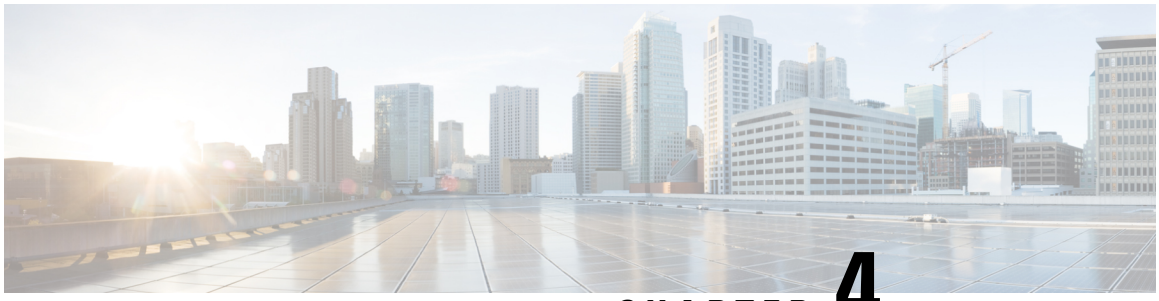

CHAPTER 4

Install the Device

Before you begin this task, ensure that you have read and understood the safety warnings in the *Standard Warning Statements* section of the *Safety Warnings* handout topic.

Installing the Cisco NCS 540 involves these tasks:

Note All the installation instructions for Cisco N540-24Z8Q2C-SYS, N540X-ACC-SYS, N540-ACC-SYS, N540-28Z4C-SYS-A/D, N540-12Z20G-SYS-A/D, N540X-12Z16G-SYS-A/D and N540X-16Z4G8Q2C-A/D variants remains similar and any differences between the routers are specifically called out.

The illustrations are for reference purpose only and may vary based on your Cisco NCS 540 variant.

- Rack Compatibility, on page 33
- Set up Device on Rack or Wall, on page 36
- Ground the Device, on page 45
- Install the AC Power Cables, on page 46
- Install the DC Power Cables, on page 48
- Port Connection Guidelines , on page 51
- Connect to the Console Port, on page 51
- Connect to the Management Ethernet Port, on page 53
- Connecting Timing Cables, on page 54
- Connecting a Cable to the GNSS Antenna Interface, on page 56
- Install and Remove Transceiver Modules, on page 57
- Connect Interface Ports, on page 66
- Maintain Transceivers and Optical Cables, on page 67

Rack Compatibility

We recommend that you follow these rack specifications.

Rack Types

Figure 16: Rack specification EIA (19 inches and 23 inches)

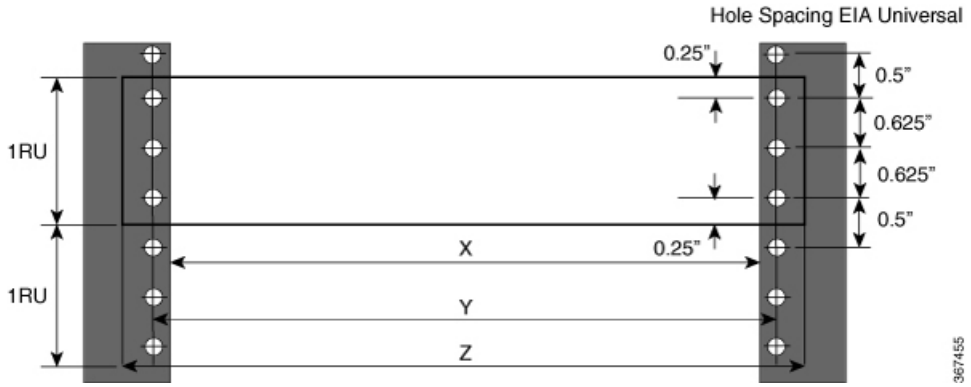

Table 12: Rack specification EIA (19 inches and 23 inches)

Post Type	Rack Type	Rack Front Opening (X)	Rack Mounting Hole Centre-Centre (Y)	Mounting Flange Dimension (Z)
4 Post	19 inches (48.3 centimeters)	450.8mm (17.75”)	465mm (18.312”)	482.6mm (19”)
2 Post				
4 Post	23 inches (58.4 centimeters)	552.45mm (21.75”)	566.7mm (22.312”)	584.2mm (23”)
2 Post				

Figure 17: Four Post Rack Type

4 – Post Type (Hole EIA Universal)		Width Available (X)	Compatibility
All 23” Type rack		552.45mm (21.75”)	Yes
All ETSI rack (21” rack)		500.0mm (19.68”)	Yes
19” Type rack L-Type Post	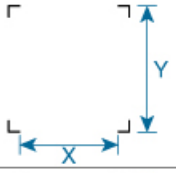	17.75” (450.8 mm)	Yes
		17.50” (444.5 mm)	No
19” Type Racks Flat-Post	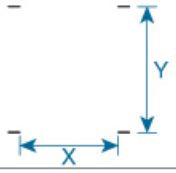	17.75” (450.8 mm)	Yes
		17.50” (444.5 mm)	No
19” Type racks C- Type Post	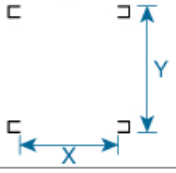	17.75” (450.8 mm)	Yes
		17.50” (444.5 mm)	No

367456

Figure 18: Two Post Rack Type

2 – Post Type (Hole EIA Universal)	X – 19" Rack	Compatibility	X-23" Rack	Compatibility
TYPE-I 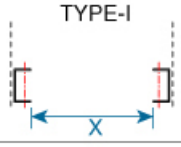	17.75" (450.8 mm)	Yes	21.75" (552.45mm)	Yes
	17.50" (444.5 mm)	No	21.75" (552.45mm)	Yes
TYPE-II 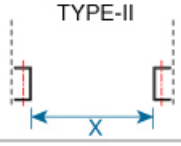	17.75" (450.8 mm)	Yes	21.75" (552.45mm)	Yes
	17.50" (444.5 mm)	No	21.75" (552.45mm)	Yes
TYPE-III 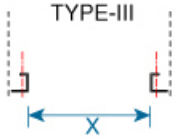	17.75" (450.8 mm)	Yes	21.75" (552.45mm)	Yes
	17.50" (444.5 mm)	No	21.75" (552.45mm)	Yes
L-TYPE 	17.75" (450.8 mm)	Yes	21.75" (552.45mm)	Yes
	17.50" (444.5 mm)	No	21.75" (552.45mm)	Yes
Uneven-TYPE 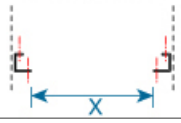	17.75" (450.8 mm)	Yes	21.75" (552.45mm)	Yes
	17.50" (444.5 mm)	No	21.75" (552.45mm)	Yes

367457

Set up Device on Rack or Wall

You can choose to either set up the Cisco NCS 540 on a rack or wall mount it.

Note Wall mount is supported only on Cisco N540-24Z8Q2C-SYS, N540X-ACC-SYS, N540-ACC-SYS, N540-28Z4C-SYS-A/D, and N540-12Z20G-SYS-A/D routers.

Rack-Mount

The device is shipped with rack mounting brackets that are to be secured on the sides of the device.

Caution If the rack is on wheels, ensure that the brakes are engaged or the rack is otherwise stabilized.

Table 13: Cisco NCS 540 Router Rack-Mount Kit

Quantity	Part Description
2	Rack-mount brackets
8	M4 x 0.7 x 6-mm Phillips flat-head screws
3[3]	M3 x 0.5 x 4-mm Phillips countersink screws

[3] Top cover or the NEBs kit is an optional accessory to improve the airflow, hence it may not be a part of your standard package.

Step 1 (Optional) Attach the top cover or the NEBs kit by using the M3 screws to the chassis.

Step 2 Attach the rack-mount brackets and the cable guides to the router as follows:

a) The router has port-side intake modules, position the router so that its ports are facing the cold aisle.
b) Position the bracket ears facing front or middle rack-mount, on the side of the chassis so that the holes are aligned.
c) Use four M4 screws to attach the brackets to the chassis.
d) Repeat Steps 1b and 1c with the other rack-mount bracket on the other side of the router.

Figure 19: Installing Rack-Mount Brackets

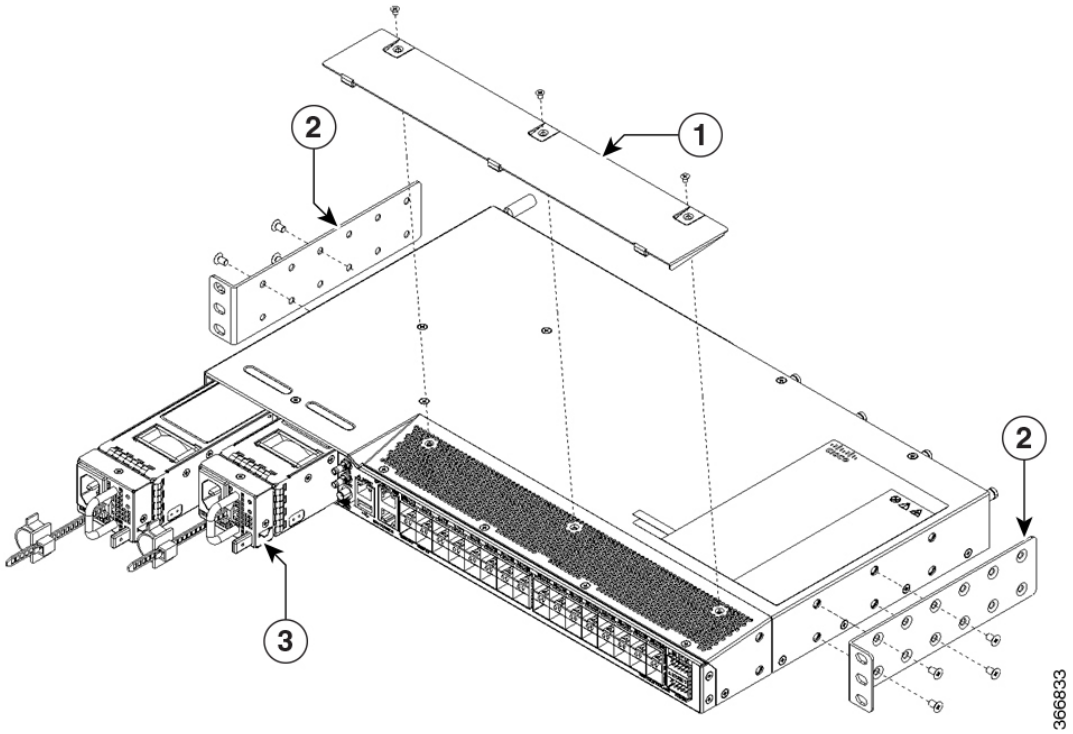

1	Top cover or the NEBs kit	2	Rack-mount brackets
3	Power supply unit	-	-

Figure 20: Installing Cable Management and 19 inch Rack-Mount Brackets in the Front

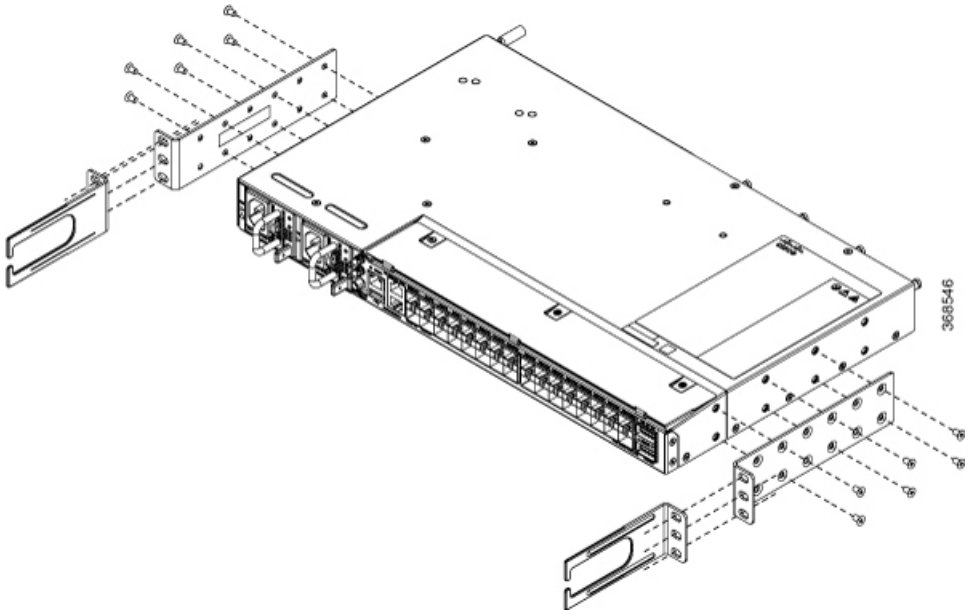

Figure 21: Installing Cable Management and 19 inch Rack-Mount Brackets in the Front (N540-28Z4C-SYS-D)

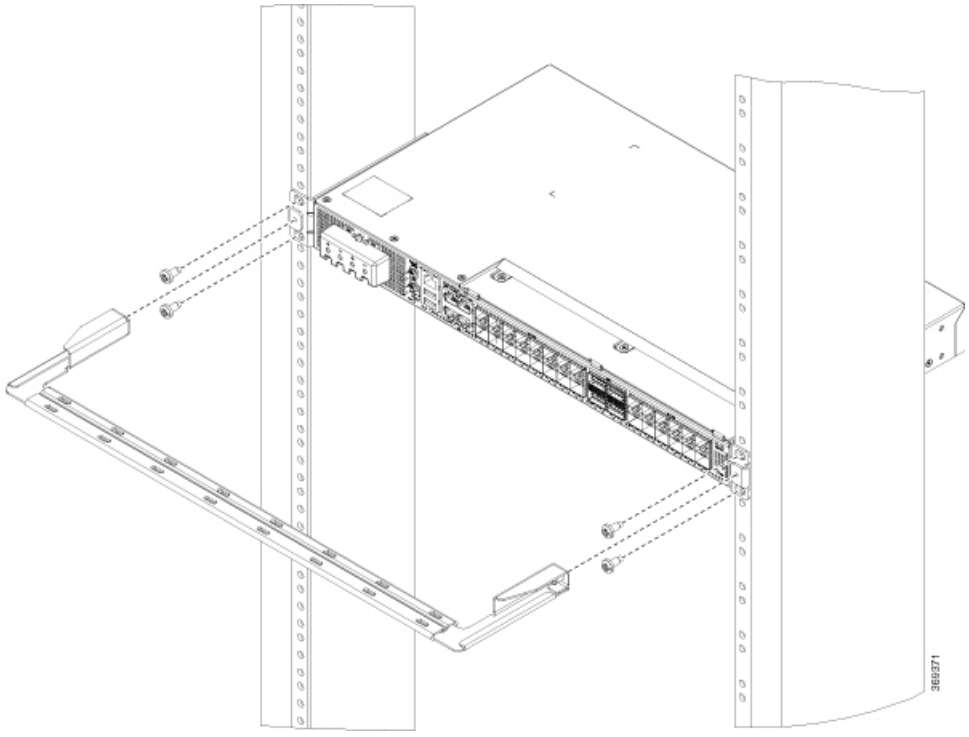

Figure 22: Installing Cable Management and 19 inch Rack-Mount Brackets in the Middle

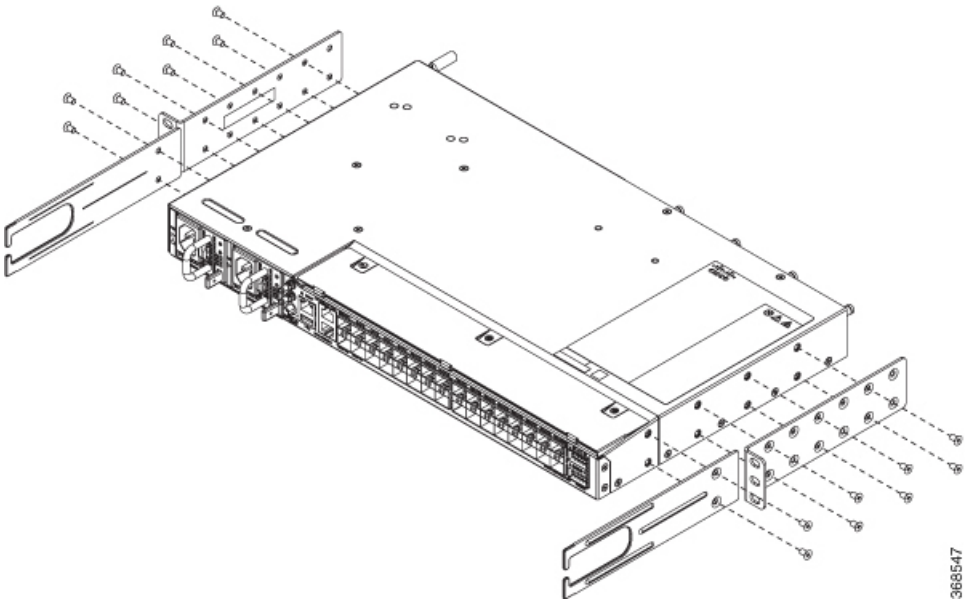

Figure 23: Installing Cable Management and 19 inch Rack-Mount Brackets in the Middle (N540-28Z4C-SYS-D)

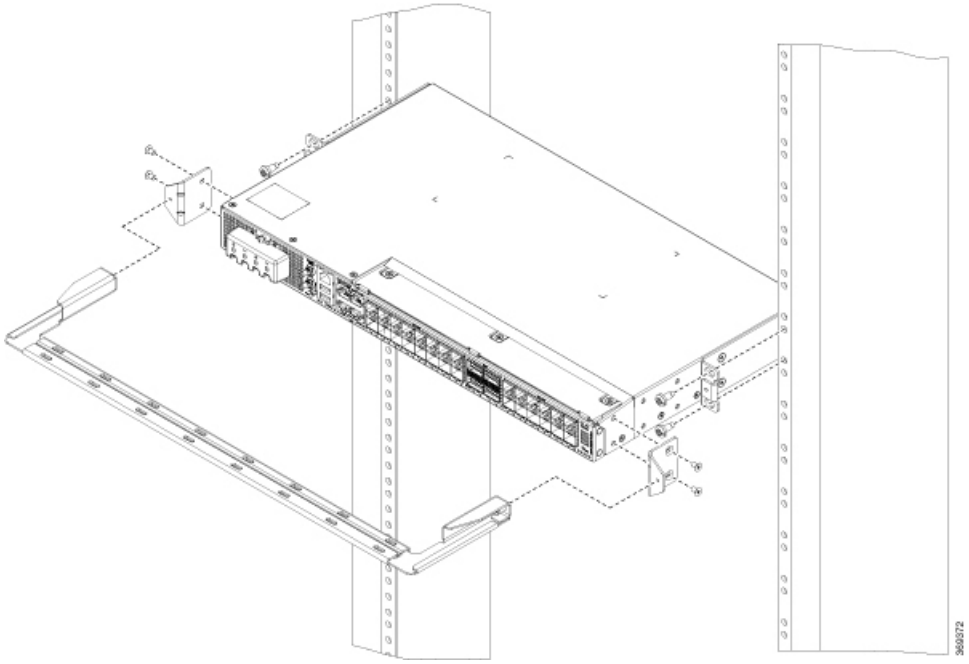

Figure 24: Installing Cable Management and 19 inch Rack-Mount Brackets in the Rear (N540-28Z4C-SYS-D)

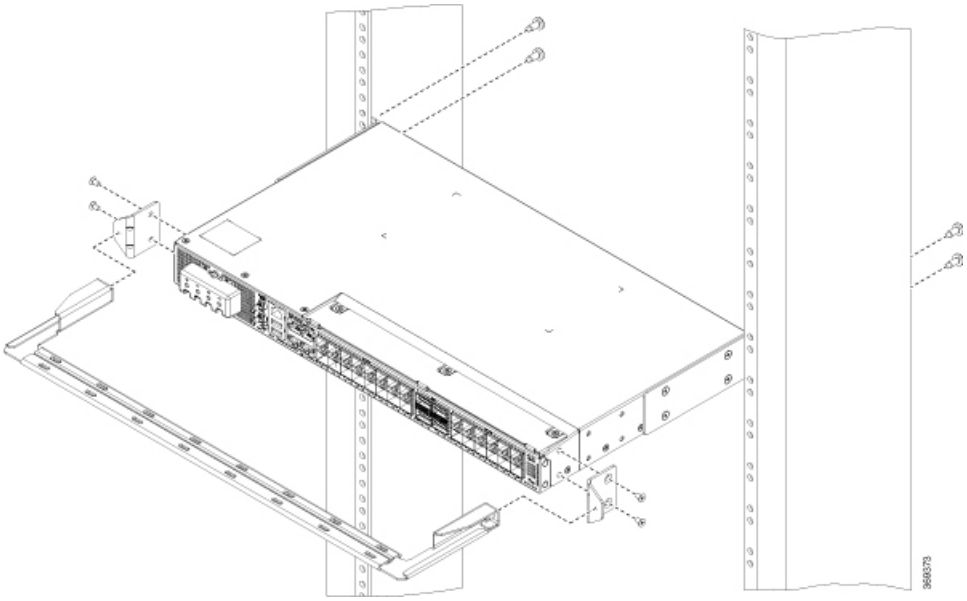

Figure 25: Installing Cable Management and 23 inch Rack-Mount Brackets in the Front

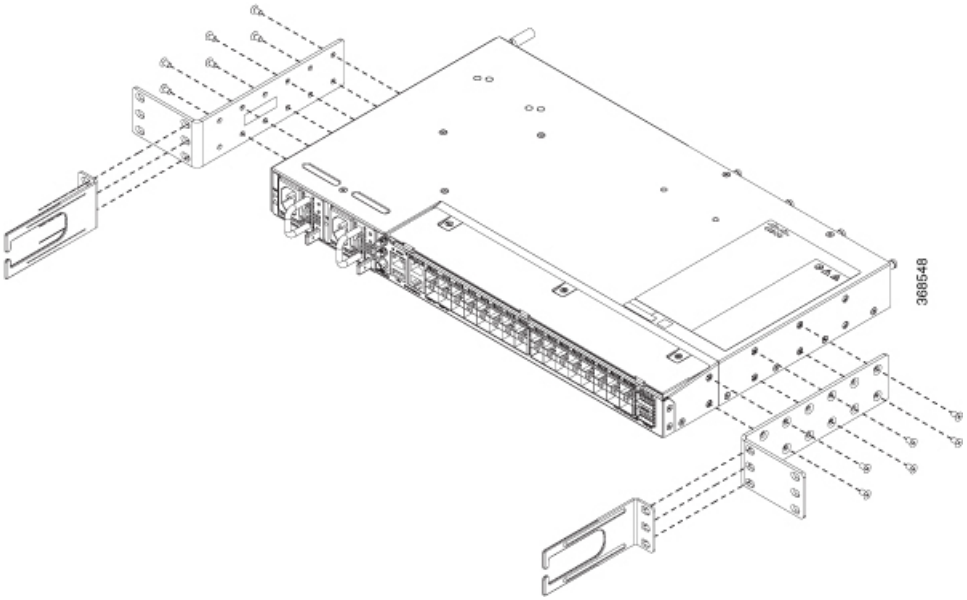

Figure 26: Installing Cable Management and 23 inch Rack-Mount Brackets in the Front (N540-28Z4C-SYS-D)

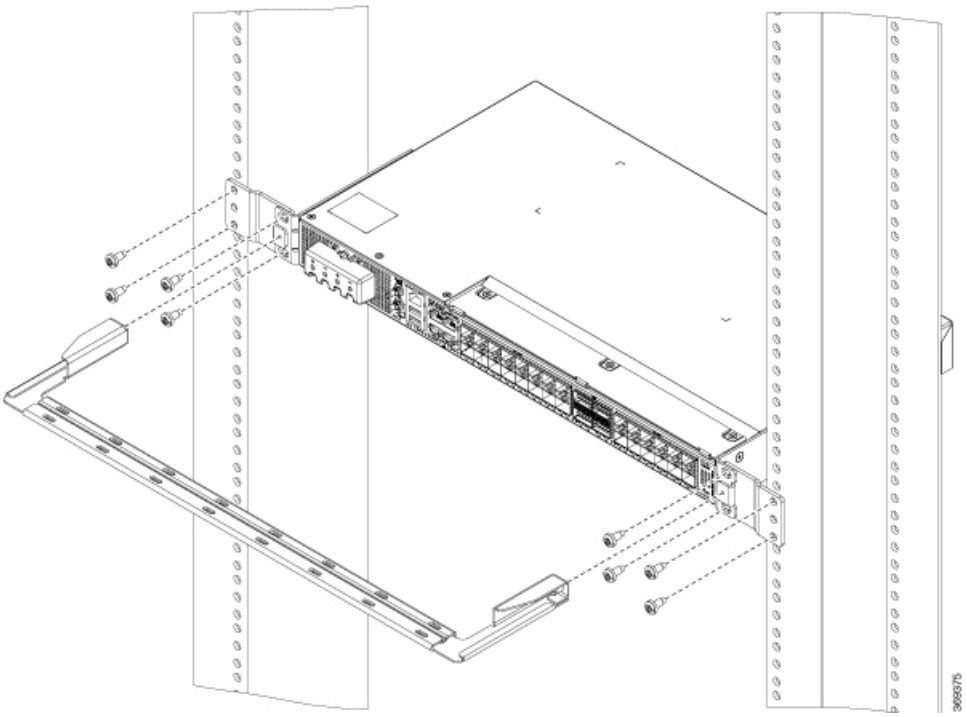

Figure 27: Installing Cable Management and 23 inch Rack-Mount Brackets in the Middle

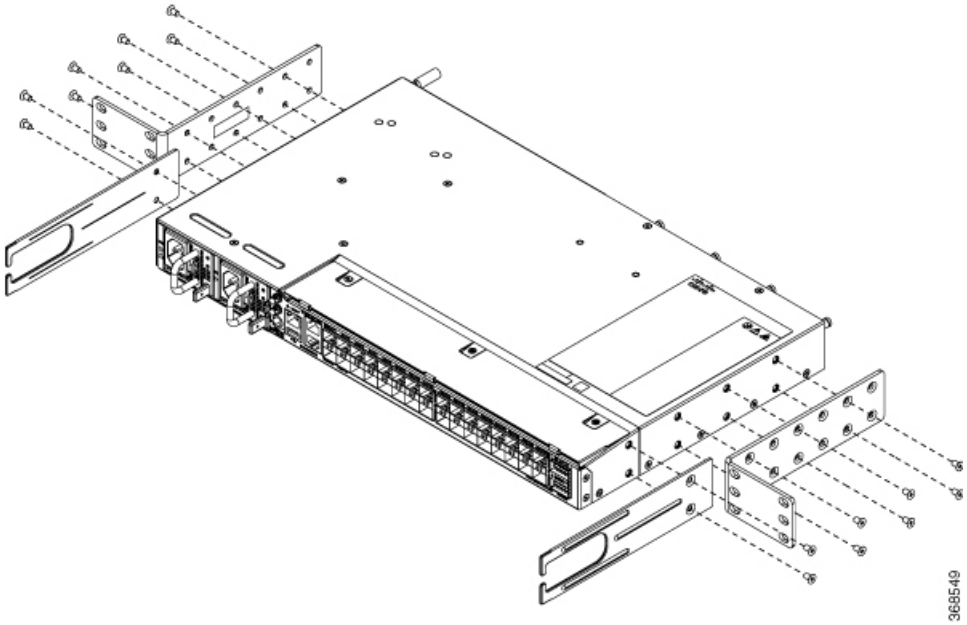

Figure 28: Installing Cable Management and ETSI Rack-Mount Brackets in the Front (N540-28Z4C-SYS-D)

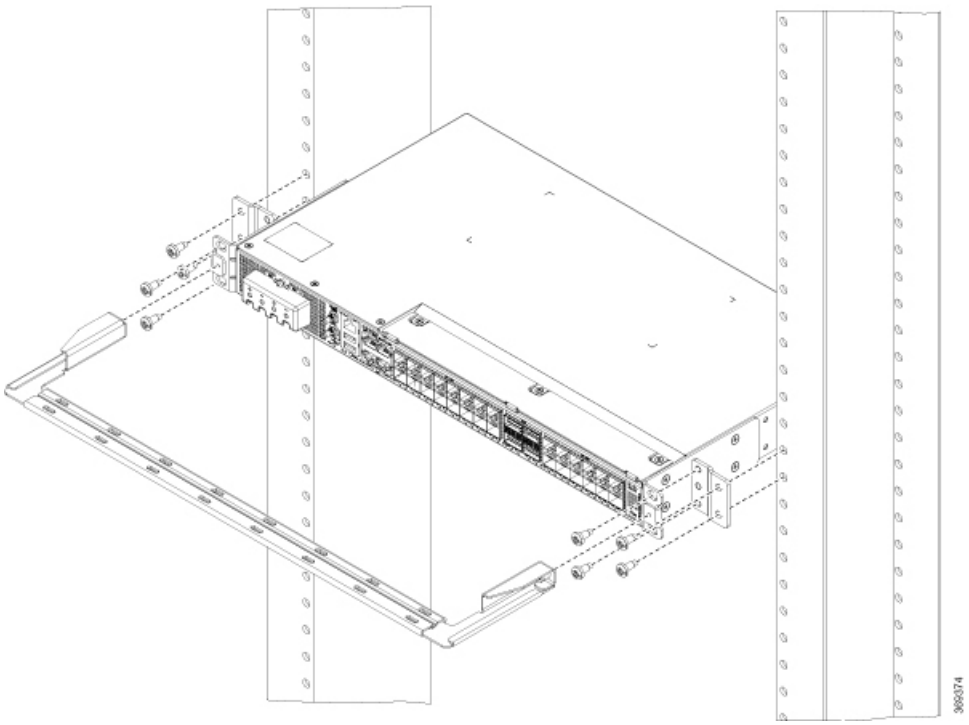

Figure 29: Installing Cable Management and ETSI Rack-Mount Brackets in the Middle

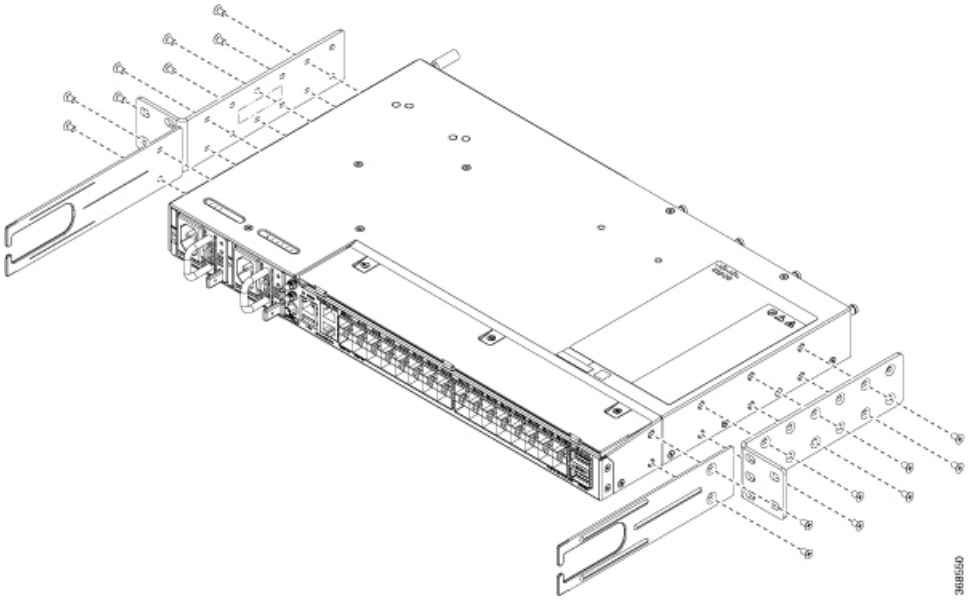

Step 3 Install the router onto the 2-post rack as follows:

a) Lift and position the router into position between the two rack posts.
b) Move the router until the rack-mount brackets come in contact with the two rack posts.

c) Hold the chassis at level and have another while the second person insert two screws (12-24 or 10-32, depending on the rack type) in each of the two rack-mount brackets (using a total of four screws) and into the cage nuts or threaded holes in the vertical rack-mounting rails.
d) Tighten the 10-32 screws to 20 in-lb (2.26 N.m) or tighten the 12-24 screws to 30 in-lb (3.39 N.m).

Wall Mount

Install the wall mounting brackets and cable guides on to the chassis before you mount the chassis on the wall.



Note The wall mount is supported only on Cisco N540-24Z8Q2C-SYS, N540X-ACC-SYS, N540-ACC-SYS, N540-28Z4C-SYS-A/D, and N540-12Z20G-SYS-A/D routers.

Install Wall Brackets

The device is shipped with wall mounting brackets that are to be secured on the sides of the device.

Step 1 Remove the wall mounting brackets from the accessory kit and position them beside the device.

Note You can install the brackets as shown in the figure.

Figure 30: Install Wall Mount Brackets (N540-28Z4C-SYS-D)

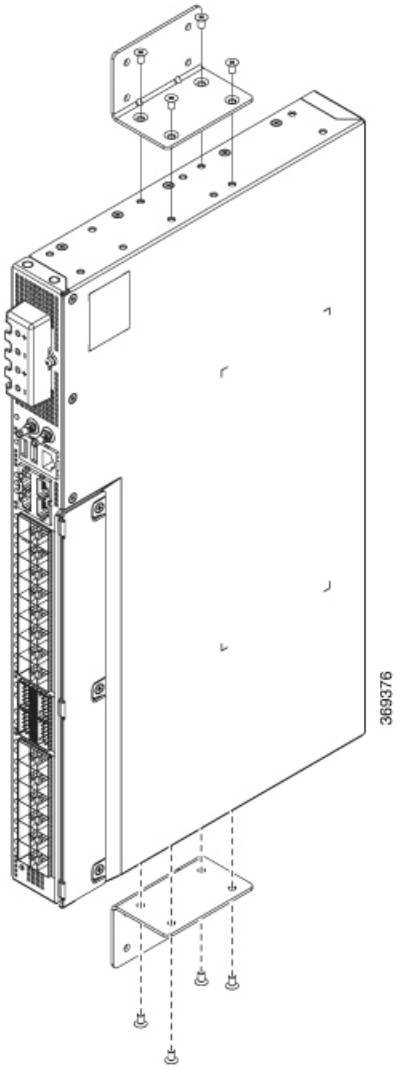

Step 2 Secure the bracket to the device with the recommended maximum torque of 10 inch-pounds (1.1 newton meters).

Wall Mount the Device

Note While you mount the device, always ensure that the power supplies are at the top position.

For the support of the device and cables, ensure that the device is attached securely to wall studs or to a firmly attached plywood mounting backboard.

Figure 31: Wall Mount the Device (N540-28Z4C-SYS-D)

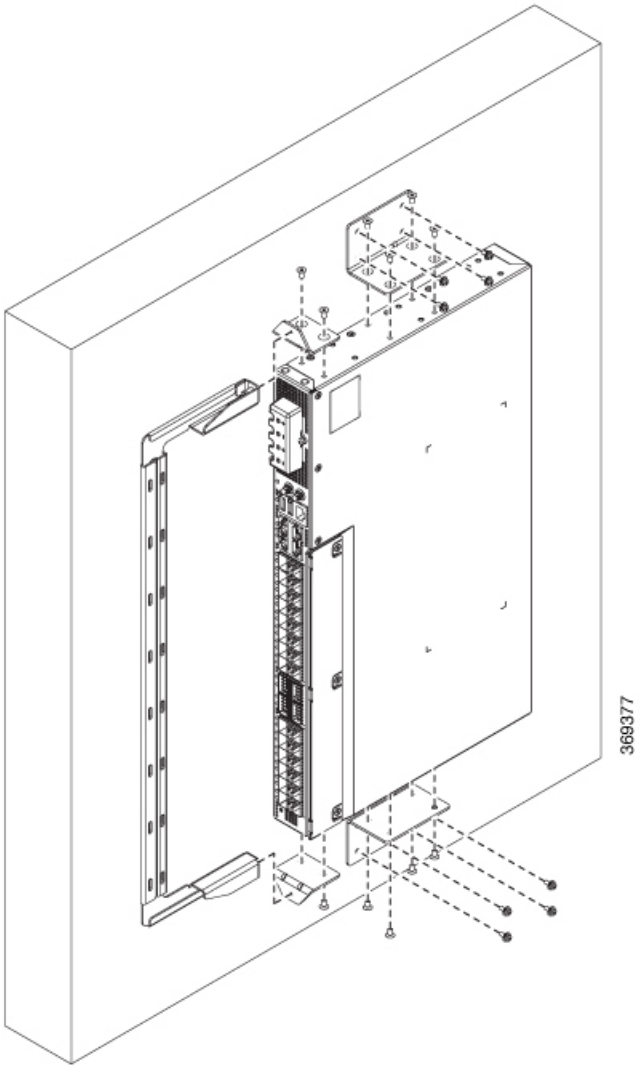

Caution Before mounting the device, ensure that all unused holes at the sides of the device are always protected by screws.

Ground the Device

Before you begin this task, ensure that you have read and understood the safety warnings in the Preventing ESD Damage section of the *Safety Warnings* handout topic.

Before you connect the power or turn on the power to the device, you must provide an adequate device ground (earth) connection to your device.

This section describes how to ground the device. The grounding lug location is on the back panel of the device.

Step 1 Verify that the ground cable is connected to the top of the rack and according to local site practice.

Figure 32: Ground Lug

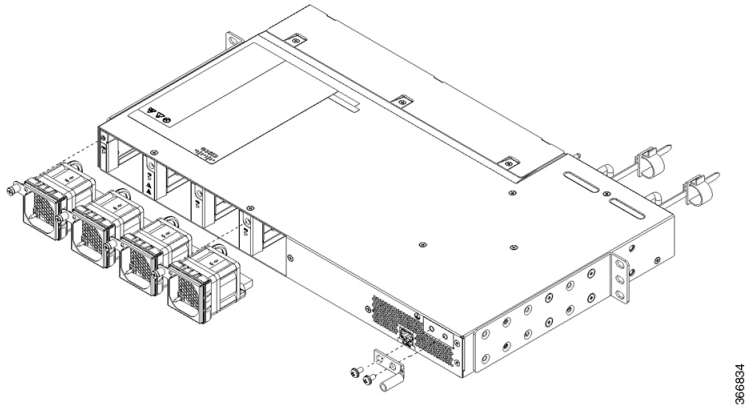

Step 2 Attach one end of the shelf ground cable (#6 AWG cable) to the ground point on the rear of the chassis using the specified dual-hole lug connector.

a) Use a wire-stripping tool to remove approximately 0.75 inches (19 mm) of the covering from the end of the grounding cable.
b) Insert the stripped end of the grounding cable into the open end of the grounding lug.
c) Use the crimping tool to secure the grounding cable in the grounding lug.
d) Remove the adhesive label from the grounding pad on the chassis.
e) Place the grounding lug against the grounding pad so that there is solid metal-to-metal contact, and insert the two M4 screws with washers through the holes in the grounding lug and into the grounding pad.
f) Ensure that the lug and cable do not interfere with other equipment.
g) Prepare the other end of the grounding cable and connect it to an appropriate grounding point in your site to ensure adequate earth ground.

Install the AC Power Cables

To install the AC power cables in the power supply slots:

Step 1 Plug the power supply cord in the power supply module.

Step 2 Insert the power supply cord into the tie [1,3] and tighten the tie around the power supply cord as shown in [2,4] in the figure below.

Figure 33: Attach the AC Power Tie-and-Clip Cord

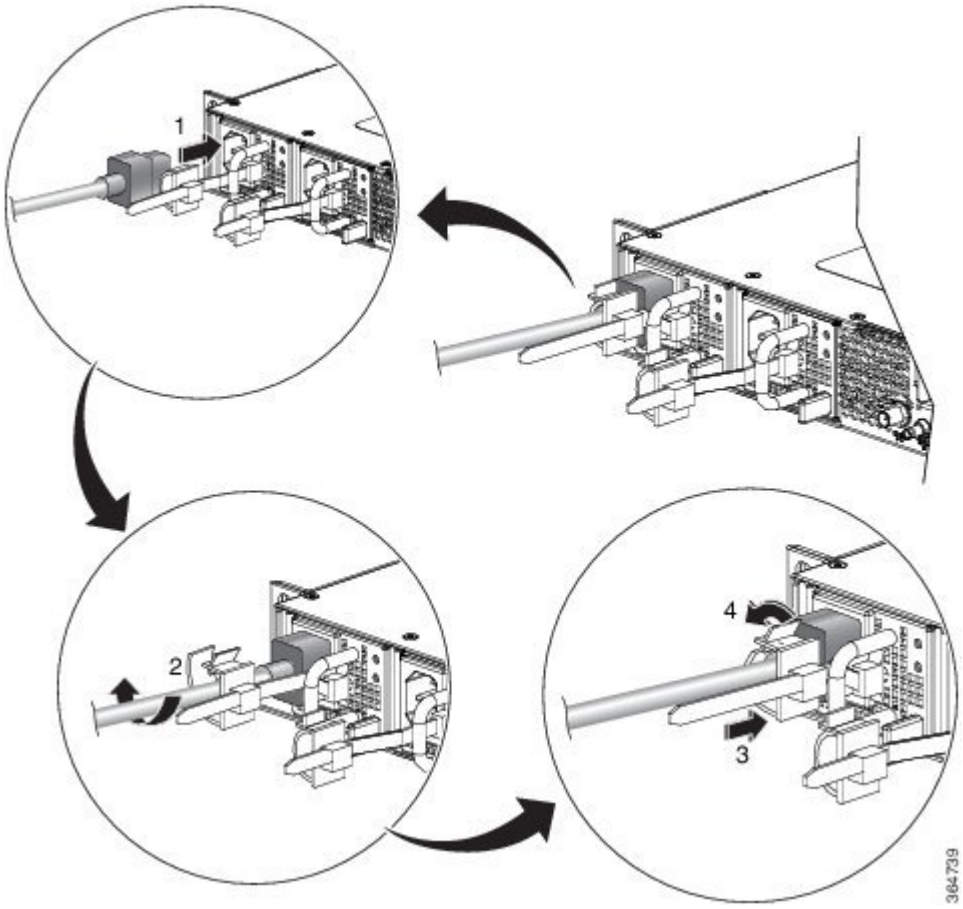

Note These images are for only representation purposes. Certain variants of Cisco NCS 540 do not include a tie for the power supply cord.

Activate an AC Power Supply Module

Perform the following procedure to activate an AC power supply:

Step 1 Plug the power cord into the power supply.

Step 2 Connect the other end of the power cord to an AC-input power source.

Step 3 Verify power supply operation by checking if the respective power supply front panel LED (PS0 or PS1) is green.

Step 4 If the LEDs indicate a power problem, see *Troubleshooting* for troubleshooting information.

Step 5 If you are also connecting a redundant AC power supply, repeat these steps for the second power source.

Note If you are connecting a redundant AC power supply, ensure that each power supply is connected to a separate power source in order to prevent power loss in the event of a power failure.

Install the DC Power Cables

Note When installing DC power supply, use 12AWG, 90°C temperature rated cable. The recommended cable length is 3 meters maximum from source. Up to 5 meters use 10AWG, and up to 3 meters use 12AWG, 90°C temperature rated cable and for other length contact Cisco.

Note

- Always ensure that the building's installation for short-circuit (overcurrent) protection does not exceed 15A.
- We recommended using a Circuit breaker or a fast acting fuse with a maximum DC rating of 10A for over current protection.

Note The DC connector or terminal block has an in built screw and cage nut to which torque of 1.3 to 1.8 N-m can be applied.

Figure 34: DC Connector with In built Screw

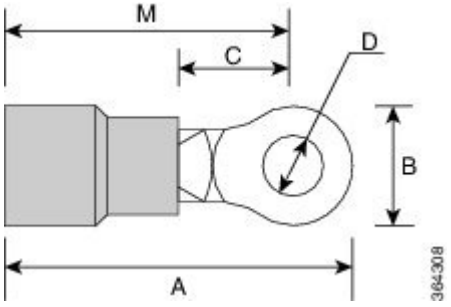

A	0.97 in. (2.4 cm)	C	0.27 in. (0.68 cm)
B	0.31 in. (0.78 cm)	D	0.17 in. (0.43 cm)
M	0.81 in. (2 cm)		

Figure 35: DC Connector with In built Screw for N540X-16Z4G8Q2C-D

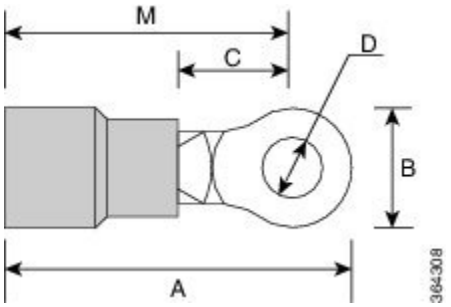

A	0.74 in. (1.88 cm)	C	0.18 in. (0.46 cm)
B	0.25 in. (0.64 cm)	D	0.14 in. (0.36 cm)
M	0.62 in. (1.58 cm)		

To attach the DC power supplies:

Step 1 Locate the terminal block plug.

Step 2 Insert the DC-input power source wires into the terminal block plug.

Step 3 Attach the DC supply wires using the designated screws.

Step 4 Use a ratcheting torque screwdriver to torque the terminal block plug captive screw. See the following figure.

Figure 36: Attach the DC Power Supply Wires

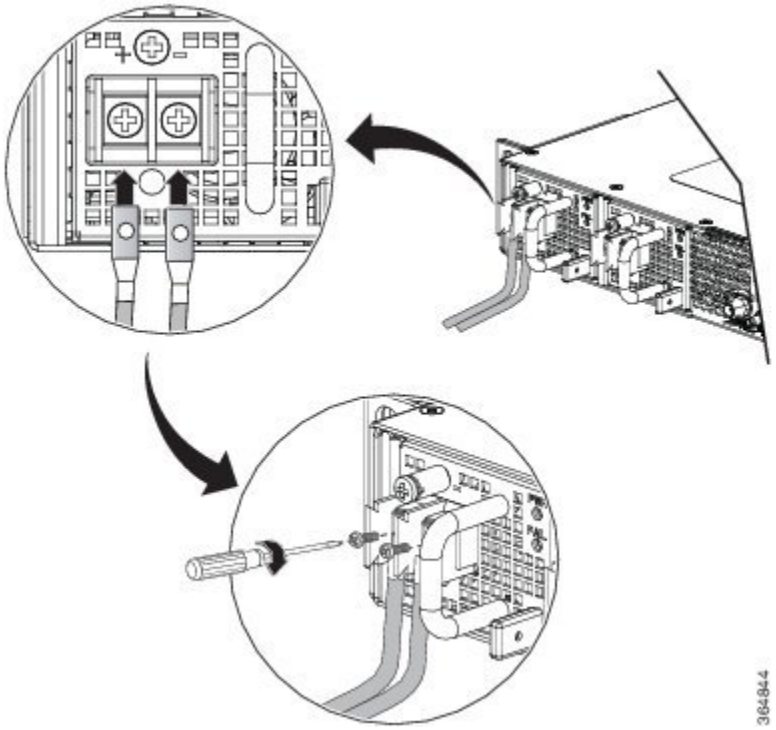

Note These images are for only representation purposes. Certain variants of Cisco NCS 540 may vary.

Activate a DC Power Supply Module

Perform the following procedure to activate a DC power supply:

Step 1 Remove the tape from the circuit-breaker router handle, and restore power by moving the circuit-breaker router handle to the On (|) position.

Step 2 Verify the power supply operation by checking whether the respective power supply front panel LED (PS0 or PS1) is green.

Step 3 If the LEDs indicate any issues with power problem, see *Troubleshooting*.

Step 4 If you are also connecting a redundant DC power supply, repeat these steps for the second power source.

Note If you are connecting a redundant DC power supply, ensure that each power supply is connected to a separate power source in order to prevent power loss in the event of a power failure.

Port Connection Guidelines

Depending on the chassis and installed line cards, you can use Quad Small Form-Factor Pluggable Plus (QSFP+), QSFP28, SFP, SFP+, and RJ-45 connectors to connect the ports on the line cards to other network devices.

To prevent damage to the fiber-optic cables, we recommend that you keep the transceivers disconnected from their fiber-optic cables when installing the transceiver in the line card. Before removing a transceiver from the router, remove the cable from the transceiver.

To maximize the effectiveness and life of your transceivers and optical cables, do the following:

- Wear an ESD-preventative wrist strap that is connected to an earth ground whenever handling transceivers. The router is typically grounded during installation and provides an ESD port to which you can connect your wrist strap.
- Do not remove and insert a transceiver more often than is necessary. Repeated removals and insertions can shorten its useful life.
- Keep the transceivers and fiber-optic cables clean and dust free to maintain high signal accuracy and to prevent damage to the connectors. Attenuation (loss of light) is increased by contamination and should be kept below 0.35 dB.
    - Clean these parts before installation to prevent dust from scratching the fiber-optic cable ends.
    - Clean the connectors regularly; the required frequency for cleaning depends upon the environment. In addition, clean connectors when they are exposed to dust or accidentally touched. Both wet and dry cleaning techniques can be effective; refer to your site's fiber-optic connection cleaning procedures.
    - Do not touch the ends of connectors. Touching the ends can leave fingerprints and cause other contamination.
- Inspect routinely for dust and damage. If you suspect damage, clean and then inspect fiber ends under a microscope to determine if damage has occurred.

Connect to the Console Port

Before you create a network management connection for the router or connect the router to the network, you must create a local management connection through a console terminal and configure an IP address for the router. You also can use the console to perform the following functions (each of which can be performed through the management interface after you make that connection):

- Configure the router using the command-line interface (CLI).
- Monitor network statistics and errors.
- Configure Simple Network Management Protocol (SNMP) agent parameters.
- Download software updates.

The system console port is an RJ-45 receptacle for connecting a data terminal to perform the initial configuration of Cisco NCS 540 fixed-port chassis. The console cable is shipped with the hardware.

Note Only RJ45 to DB-9 adapter cable is provided in the package.

Figure 37: Connecting the USB Console Cable to the Chassis

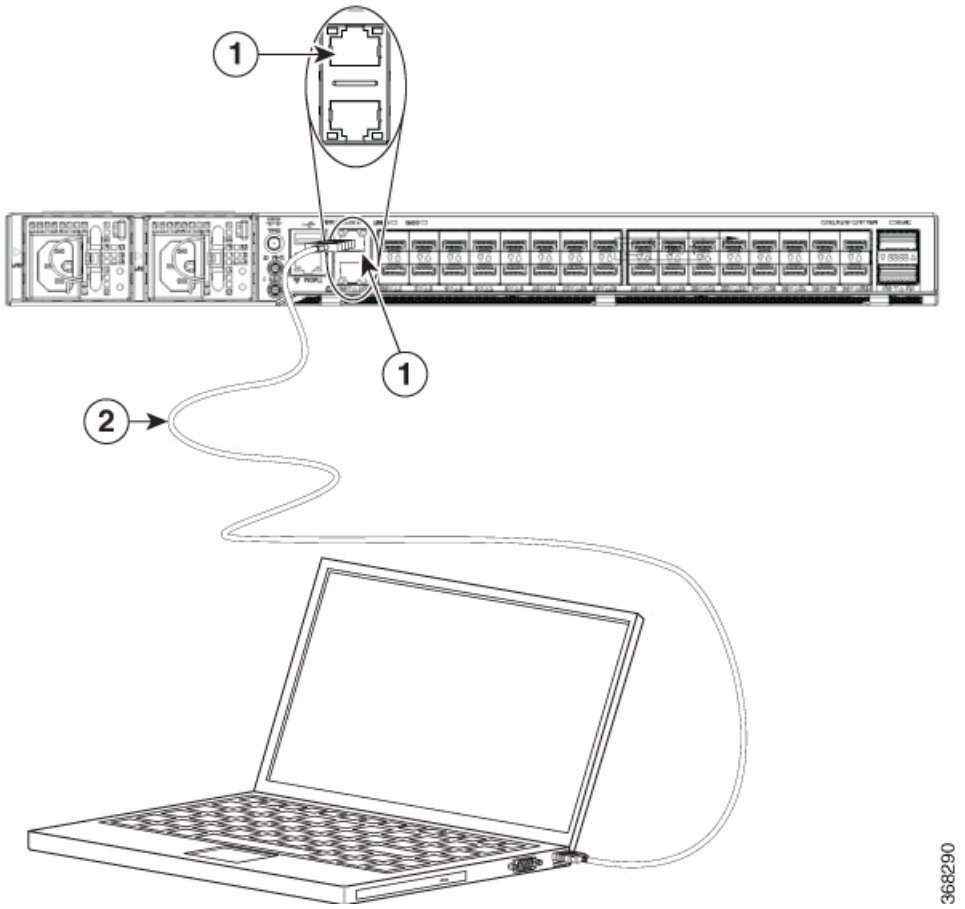

1	RJ45 Port	2	USB Type-A console cable

Follow this procedure to connect a data terminal to the console port.

Before you begin

- The router must be fully installed in its rack, connected to a power source, and grounded.
- The necessary cabling for the console, management, and network connections must be available.
  - An RJ-45 rollover cable and DB9F/RJ-45 adapter are provided in the router accessory kit.
  - Network cabling should already be routed to the location of the installed router.

Step 1 Set your terminal to these operational values: 115200 bps, 8 data bits, no parity, and 2 stop bits.

Step 2 Attach the terminal end of the cable to the interface port on the data terminal.

Step 3 Attach the other end of the cable to the console port.

Following table represents the RJ-45 cable pin-out information.

Table 14: RJ-45 Straight-through Cable Pin-outs

RJ-45 Pin	Signal
1	—
2	—
3	Tx
4	Ground (GND)
5	GND
6	Rx
7	—
8	—

Connect to the Management Ethernet Port

The management Ethernet port provides out-of-band management, which enables you to use the command-line interface (CLI) to manage the router by its IP address. This port uses a 10/100/1000 Ethernet connection with an RJ-45 interface.

Note To prevent an IP address conflict, do not connect the management Ethernet port until the initial configuration is complete.

To connect cables to the system management port, attach Category 5 cables directly to the RJ-45 receptacle on the management Ethernet port.

Figure 38: Console Port

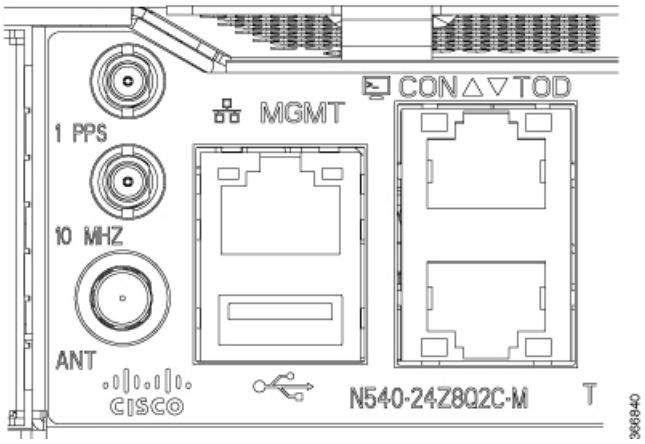

Note To comply with GR-1089-CORE, the intra-building port(s) of the equipment must use shielded intra-building cabling or wiring that is grounded at both ends.

Before you begin

You must complete initial router configuration.

Step 1 Plug the cable directly into the RJ-45 receptacle.

Step 2 Connect the network end of your RJ-45 cable to a switch, hub, repeater, or other external equipment.

Connecting Timing Cables

Note When installing the cables to the RSPs, we recommend that you leave a service loop of extra cable to enable fan tray removal.

The following sections describe how to connect timing cables to the router:

Connecting a Cable to the BITS Interface

The following steps describe how to connect a cable to the router's BITS port:

Step 1 Confirm that the router is powered off.

Step 2 Connect one end of the cable to the BITS port using a straight-through, shielded RJ48C-to-RJ48C cable.

Step 3 Connect the other end to the BTS patch or demarcation panel at your site.

Step 4 Turn on the power to the router.

Note The use of two BITS sources or a Y-cable is optional. Each BITS input port is routed to both the RSPs, so that the SETS device on each RSP has visibility to both the BITS inputs.

Warning To comply with the Telcordia GR-1089 NEBS standard for electromagnetic compatibility and safety, connect the BITS ports only to intra-building or unexposed wiring or cable. The intrabuilding cable must be shielded and the shield must be grounded at both ends. The intra-building port(s) of the equipment or subassembly must not be metallically connected to interfaces that connect to the OSP or its wiring. These interfaces are designed for use only as intra-building interfaces (Type 2 or Type 4 ports as described in GR-1089-CORE) and require isolation from the exposed OSP cabling. The addition of Primary Protectors is not sufficient protection in order to connect these interfaces metallically to OSP wiring.

Connecting Cables to a GPS Interface

Note When installing the cables to the RSP, we recommend that you leave a service loop of extra cable to enable fan tray removal.

The following sections describe how to connect cables from the router to a GPS unit for input or output timing of frequency:

Connecting a Cable to the Input 10-MHz or 1-PPS Interface

Step 1 Connect one end of a mini-coax cable to the GPS unit.

Step 2 Connect the other end of the mini-coax cable to the 10-MHz or 1-PPS port on the RSP of the router.

Connecting a Cable to the Output 10-MHz or 1-PPS Interface

Step 1 Connect one end of a mini-coax cable to the Slave unit.

Step 2 Connect the other end of the mini-coax cable to the 10-MHz or 1-PPS port on the RSP of the router.

Connecting a Cable to the ToD Interface

Step 1 Connect one end of a straight-through Ethernet cable to the GPS unit.

Step 2 Connect the other end of the straight-through Ethernet cable to the ToD or 1-PPS port on the RSP of the router.

Warning To comply with the Telcordia GR-1089 NEBS standard for electromagnetic compatibility and safety, connect the ToD ports only to intra-building or unexposed wiring or cable. The intrabuilding cable must be shielded and the shield must be grounded at both ends. The intra-building port(s) of the equipment or subassembly must not be metallically connected to interfaces that connect to the OSP or its wiring. These interfaces are designed for use as intra-building interfaces only (Type 2 or Type 4 ports as described in GR-1089-CORE) and require isolation from the exposed OSP cabling. The addition of Primary Protectors is not sufficient protection in order to connect these interfaces metallically to OSP wiring.

Note For more information about GPS-port pinouts, see *Pinouts* table.

Connecting a Cable to the GNSS Antenna Interface

Note The GNSS module is not hot swappable.

Step 1 Connect one end of a shielded coaxial cable to the GNSS RF IN port.

Step 2 Connect the other end of the shielded coaxial cable to the GNSS antenna after the primary protector.

Note The GNSS RF In port should have a primary protector installed to meet the Local Safety guidelines.

The GNSS RF In coaxial cable shield must be connected to the Facility Equipment Ground through the chassis. The chassis must have the ground wire connected to the Facility Equipment Ground.

Figure 39: Installing the GNSS Module in the RSP

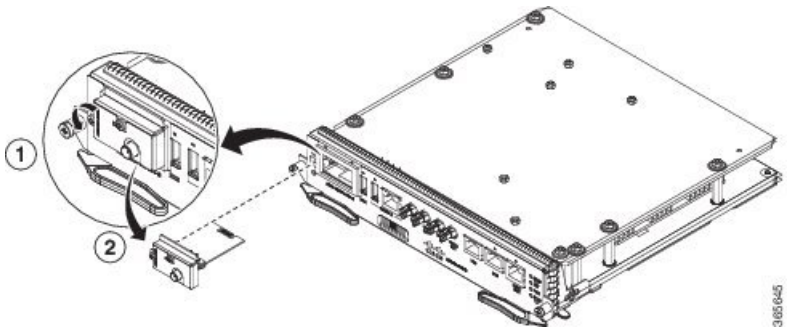

1	Screw on the GNSS Module	2	Inserting the GNSS Module

Install and Remove Transceiver Modules

Install and Remove SFP Modules

Before you remove or install an SFP or SFP+ module, read the installation information in this section.

Warning Invisible laser radiation may be emitted from disconnected fibers or connectors. Do not stare into beams or view directly with optical instruments. Statement 1051

Caution Protect the line card by inserting a clean SFP/SFP+ module cage cover, shown in the figure below, into the optical module cage when there is no SFP or SFP+ module installed.

Figure 40: SFP/SFP+ Module Cage Cover

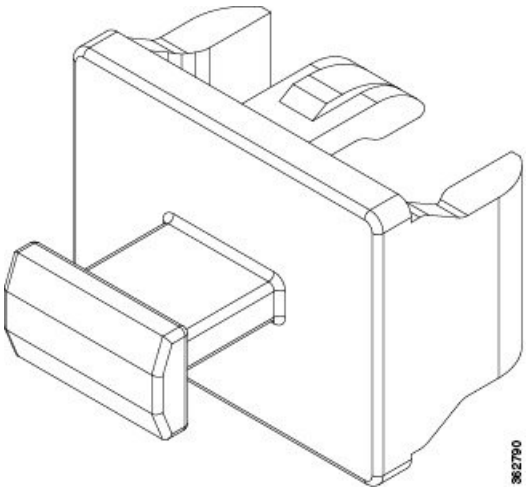

Caution Protect the SFP or SFP+ modules by inserting clean dust covers into them after the cables are removed. Be sure to clean the optic surfaces of the fiber cables before you plug them back into the optical ports of another module. Avoid getting dust and other contaminants into the optical ports of your SFP or SFP+ modules, because the optics do not work correctly when obstructed by dust.

Caution We strongly recommended that you do not install or remove the SFP or SFP+ module with fiber-optic cables attached to it because of the potential of damaging the cable, the cable connector, or the optical interfaces in the module. Disconnect all cables before removing or installing an SFP or SFP+ module. Removing and inserting a module can shorten its useful life, so you should not remove and insert modules any more than is absolutely necessary.

Note When installing an SFP or SFP+ module, you should hear a click as the triangular pin on the bottom of the module snaps into the hole in the receptacle. The click indicates that the module is correctly seated and secured in the receptacle. Verify that the modules are completely seated and secured in their assigned receptacles on the line card by firmly pushing on each SFP or SFP+ module.

Bale Clasp SFP or SFP+ Module

The bale clasp SFP or SFP+ module has a clasp that you use to remove or install the module (see the figure below).

Figure 41: Bale Clasp SFP or SFP+ Module

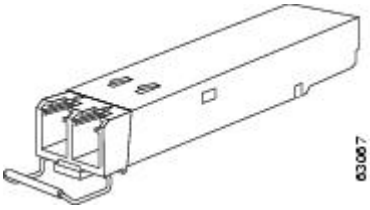

Install a Bale Clasp SFP or SFP+ Module

To install this type of SFP or SFP+ module, follow these steps:

Step 1 Attach an ESD-preventive wrist or ankle strap and follow its instructions for use.

Step 2 Close the bale clasp before inserting the SFP module.

Step 3 Line up the SFP module with the port and slide it into the port (see the figure below).

Figure 42: Installing a Bale Clasp SFP Module into a Port

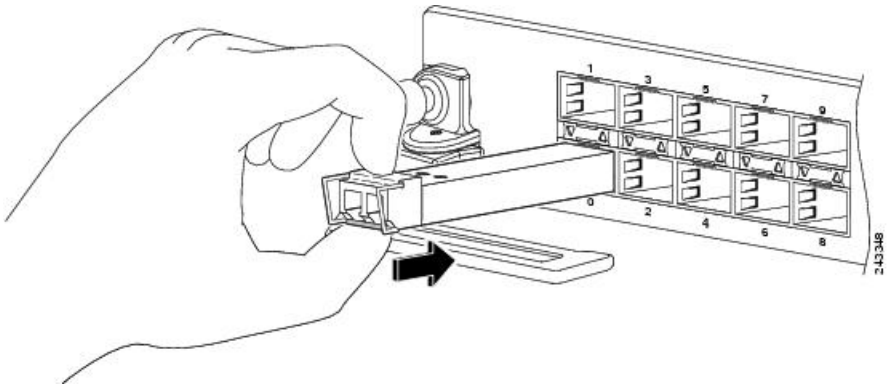

Note When installing an SFP or SFP+ module, you should hear a click as the triangular pin on the bottom of the SFP module snaps into the hole in the receptacle. This click indicates that the module is correctly seated and secured in the receptacle. Verify that the SFP modules are completely seated and secured in their assigned receptacles on the line card by firmly pushing on each SFP module.

Remove a Bale Clasp SFP or SFP+ Module

To remove this type of SFP or SFP+ module, follow these steps:

Step 1 Attach an ESD-preventive wrist or ankle strap and follow its instructions for use.

Step 2 Disconnect and remove all interface cables from the ports; note the current connections of the cables to the ports on the line card.

Step 3 Open the bale clasp on the SFP module with your index finger, as shown in the figure below. If the bale clasp is obstructed and you cannot use your index finger to open it, use a small flat-blade screwdriver or other long, narrow instrument to open the bale clasp.

Step 4 Grasp the SFP module between your thumb and index finger and carefully remove it from the port, as shown in the figure below.

Note This action must be performed during your first instance. After all the ports are populated, this may not be possible.

Figure 43: Removing a Bale Clasp SFP or SFP+ Module

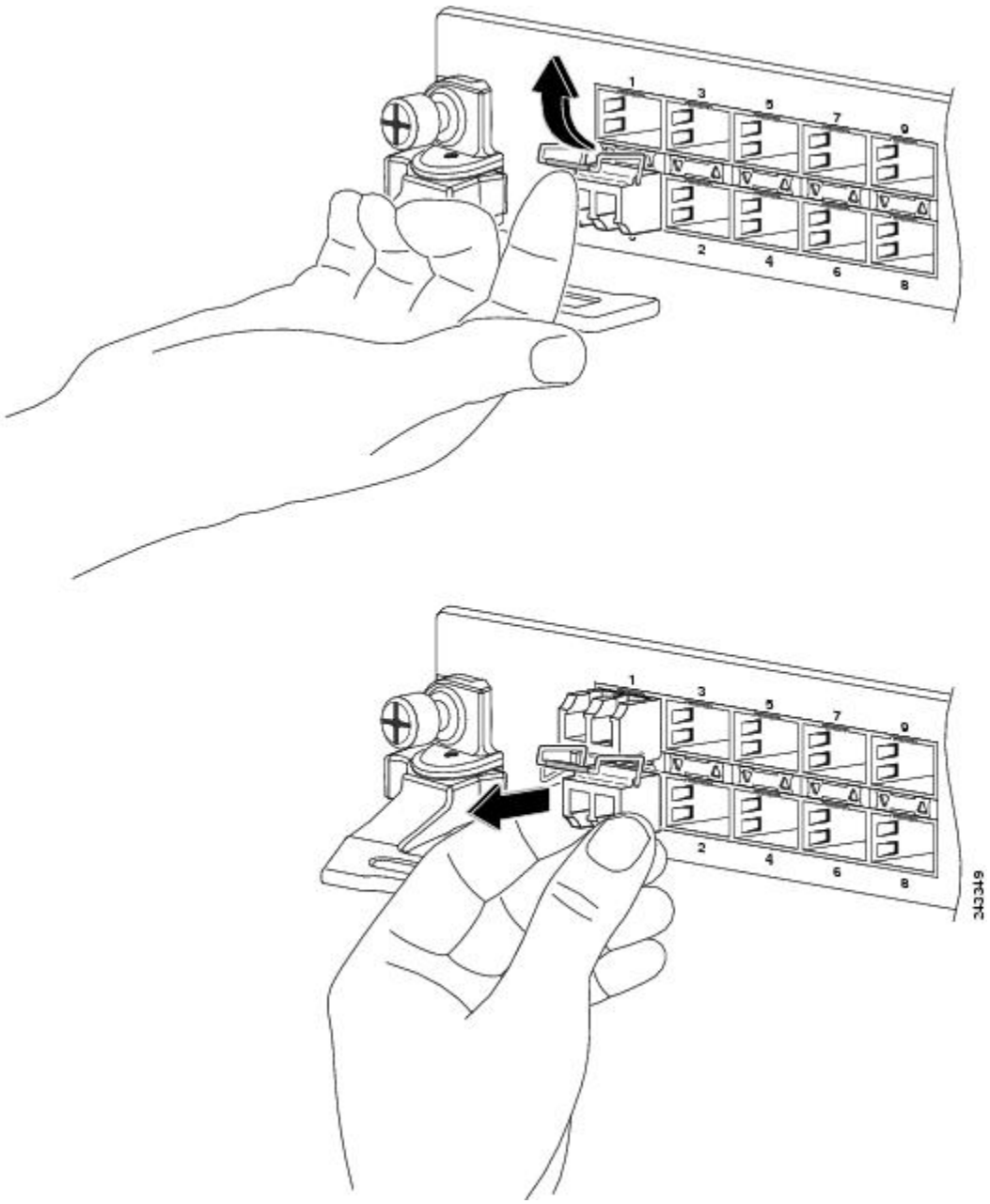

Step 5 Place the removed SFP module on an antistatic mat, or immediately place it in a static shielding bag if you plan to return it to the factory.

Step 6 Protect your line card by inserting a clean SFP module cage covers into the optical module cage when there is no SFP module installed.

Install and Remove QSFP+/QSFP28 Transceiver Modules

This section provides the installation, cabling, and removal instructions for the 40-Gigabit Quad Small Form-Factor Pluggable Plus (QSFP+) and 100 Gigabit (QSFP28) transceiver modules. The modules are hot-swappable input/output (I/O) devices that connect the system's module port electrical circuitry with either a copper or a fiber-optic network.

The following figure shows the 40-Gigabit optical QSFP+ transceiver. The transceiver is used primarily in short reach applications in switches, routers, and data center equipment where it provides higher density than SFP+ modules. The 100-Gigabit optical QSFP28 transceiver is similar to the 40-Gigabit optical QSFP transceiver.

Figure 44: 40-Gigabit QSFP+ Transceiver Module (Optical)

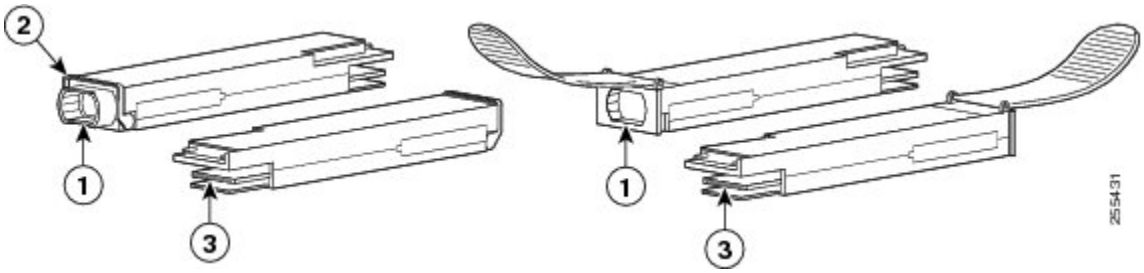

1	40GBASE QSFP+ transceiver body	3	Electrical connection to the module circuitry
2	Bail-clasp latch		

Overview

The 40-Gigabit (GE) QSFP+ and 100 Gigabit (QSFP28) transceiver module is a hot-swappable, parallel fiber-optical module with 4 independent optical transmit and receive channels. These channels can terminate in another 40-Gigabit QSFP+ transceiver, or the channels can be broken out to 4 separate 10-Gigabit SFP+ transceivers. The QSFP+ transceiver module connects the electrical circuitry of the system with an optical external network.

The following figure shows the 40-Gigabit optical QSFP+ transceiver. The transceiver is used primarily in short reach applications in switches, routers, and data center equipment where it provides higher density than SFP+ modules. The 100-Gigabit optical QSFP28 transceiver is similar to the 40-Gigabit optical QSFP transceiver.

Figure 45: 40-Gigabit QSFP+ Transceiver Module (Optical)

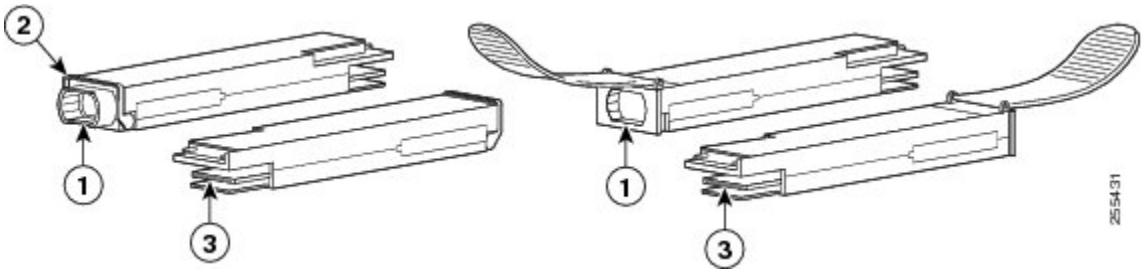

1	40GBASE QSFP+ transceiver body	3	Electrical connection to the module circuitry
2	Bail-clasp latch		

Required Tools and Equipment

You need these tools to install the 40-Gigabit QSFP+ / 100-Gigabit QSFP28 transceiver modules:

- Wrist strap or other personal grounding device to prevent ESD occurrences.
- Antistatic mat or antistatic foam to set the transceiver on.
- Fiber-optic end-face cleaning tools and inspection equipment.

For information on inspecting and cleaning fiber-optic connections, see Maintain Transceivers and Optical Cables.

Install the 100-Gigabit Transceiver Module

The QSFP+ or QSFP28 transceiver module can have either a bail-clasp latch or a pull-tab latch. Installation procedures for both types of latches are provided.



Caution The QSFP+ or QSFP28 transceiver module is a static-sensitive device. Always use an ESD wrist strap or similar individual grounding device when handling QSFP+ or QSFP28 transceiver modules or coming into contact with system modules.

To install an QSFP+ or QSFP28 transceiver module, follow these steps:

Step 1 Attach an ESD wrist strap to yourself and a properly grounded point on the chassis or the rack.

Step 2 Remove the QSFP+ or QSFP28 transceiver module from its protective packaging.

Step 3 Check the label on the QSFP+ or QSFP28 transceiver module body to verify that you have the correct model for your network.

Step 4 For optical QSFP+ or QSFP28 transceiver modules, remove the optical bore dust plug and set it aside.

Step 5 For QSFP+ or QSFP28 transceiver modules equipped with a pull-tab, hold the transceiver so that the identifier label is on the top.

Step 6 For QSFP+ or QSFP28 transceiver modules equipped with a bail-clasp latch, keep the bail-clasp aligned in a vertical position.

Step 7 Align the QSFP+ or QSFP28 transceiver module in front of the module's transceiver socket opening and carefully slide the QSFP+ or QSFP28 transceiver into the socket until the transceiver makes contact with the socket electrical connector (see the figure below).

Figure 46: Installing the 100-Gigabit QSFP28 Transceiver Module (Optical Transceiver Equipped with a Bail-Clasp Latch Shown)

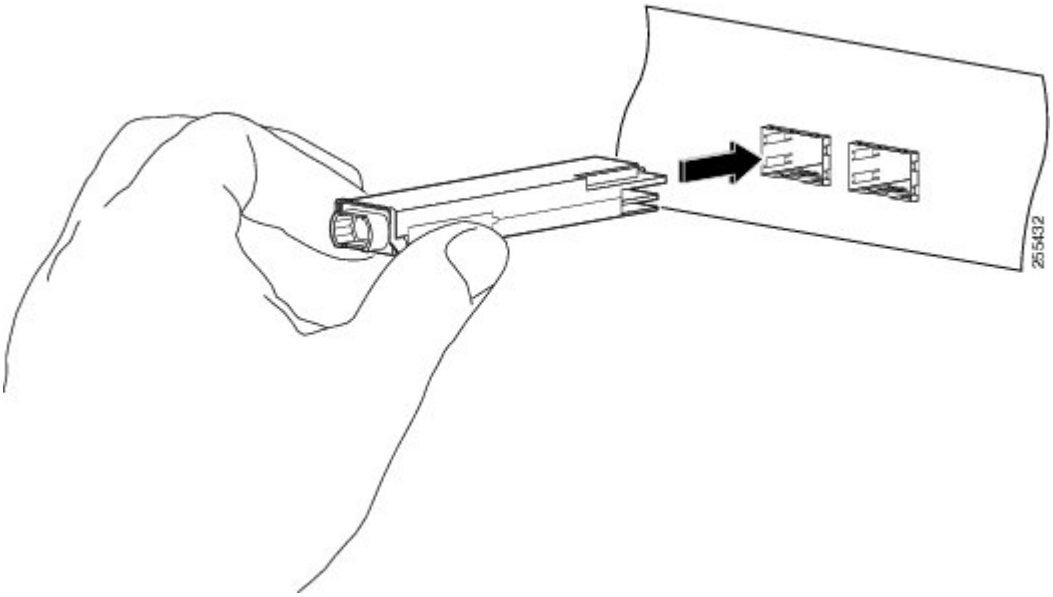

Step 8 Press firmly on the front of the QSFP+ or QSFP28 transceiver module with your thumb to fully seat the transceiver in the module's transceiver socket (see the below figure).

Caution If the latch is not fully engaged, you might accidentally disconnect the QSFP+ or QSFP28 transceiver module.

Figure 47: Seating the 100-Gigabit QSFP28 Transceiver Module (Optical Transceiver Equipped with a Bail-Clasp Latch Shown)

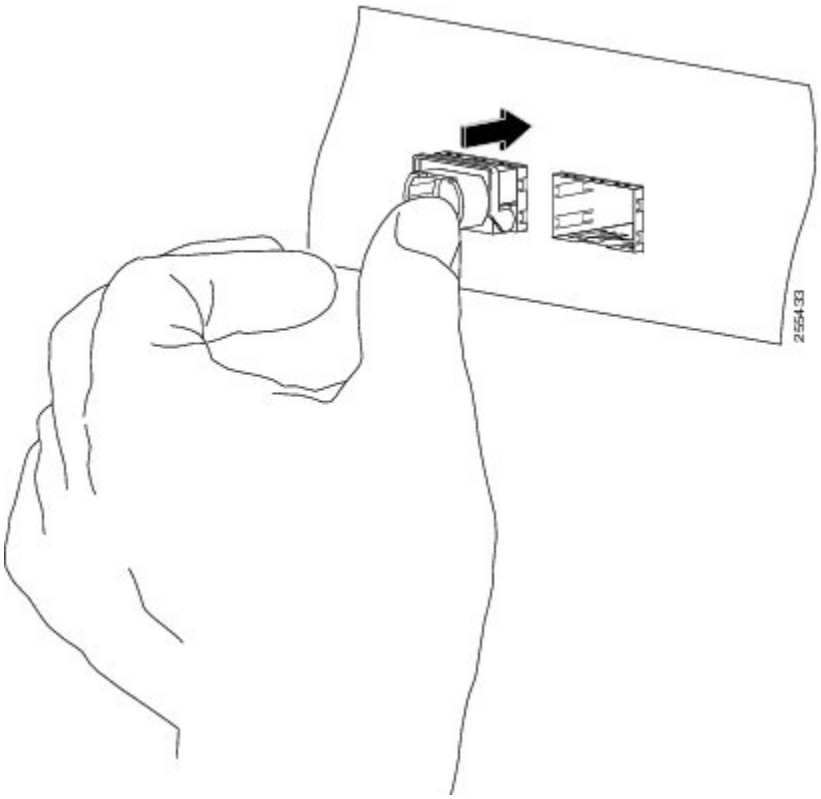

Step 9 For optical QSFP+ or QSFP28 transceiver modules, reinstall the dust plug into the QSFP+ or QSFP28 transceivers optical bore until you are ready to attach the network interface cable. Do not remove the dust plug until you are ready to attach the network interface cable.

Attach the Optical Network Cable

Before you begin

Before you remove the dust plugs and make any optical connections, follow these guidelines:

- Keep the protective dust plugs installed in the unplugged fiber-optic cable connectors and in the transceiver optical bores until you are ready to make a connection.
- Inspect and clean the MPO connector end faces just before you make any connections.
- Grasp the MPO connector only by the housing to plug or unplug a fiber-optic cable.

Note 40-Gigabit QSFP+ or QSFP28 transceiver modules are keyed to prevent incorrect insertion.

Note The multiple-fiber push-on (MPO) connectors on the optical QSFP+ or QSFP28 transceivers support network interface cables with either physical contact (PC) or ultra-physical contact (UPC) flat polished face types. The MPO connectors on the optical QSFP+ or QSFP28 transceivers do not support network interface cables with an angle-polished contact (APC) face type.

Step 1 Remove the dust plugs from the optical network interface cable MPO connectors. Save the dust plugs for future use.

Step 2 Inspect and clean the MPO connector's fiber-optic end faces.

Step 3 Remove the dust plugs from the QSFP+ or QSFP28 transceiver module optical bores.

Step 4 Immediately attach the network interface cable MPO connectors to the QSFP+ or QSFP28 transceiver module (see the figure below).

Figure 48: Cabling a 40-Gigabit QSFP+ or QSFP28 Transceiver Module

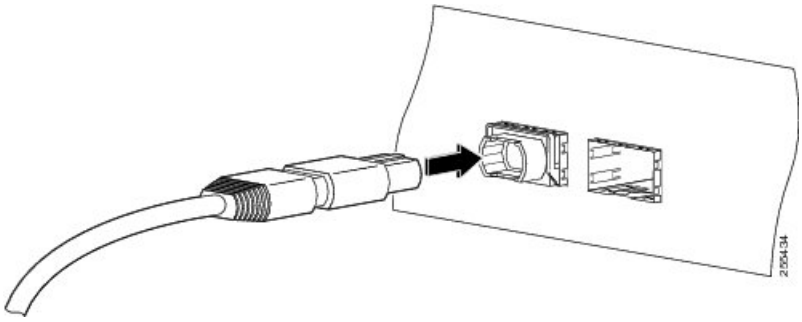

Remove the 100-Gigabit QSFP28 Transceiver Module

Caution The QSFP+ or QSFP28 transceiver module is a static-sensitive device. Always use an ESD wrist strap or similar individual grounding device when handling QSFP+ or QSFP28 transceiver modules or when coming into contact with modules.

To remove a QSFP+ or QSFP28 transceiver module, follow these steps:

Step 1 For optical QSFP+ or QSFP28 transceiver modules, disconnect the network interface cable from the QSFP+ or QSFP28 transceiver connector.

Step 2 For QSFP+ or QSFP28 transceiver modules equipped with a bail-clasp latch (see the below figure, top view):

a) Pivot the bail-clasp down to the horizontal position.
b) Immediately install the dust plug into the transceivers optical bore.
c) Grasp the sides of the QSFP+ or QSFP28 transceiver and slide it out of the module socket.

Step 3 For QSFP+ or QSFP28 transceivers equipped with a pull tab latch (see the below figure, bottom view):

a) Immediately install the dust plug into the transceiver's optical bore.
b) Grasp the tab and gently pull to release the transceiver from the socket.

c) Slide the transceiver out of the socket.

Figure 49: Removing the 100-Gigabit QSFP28 Transceiver Module

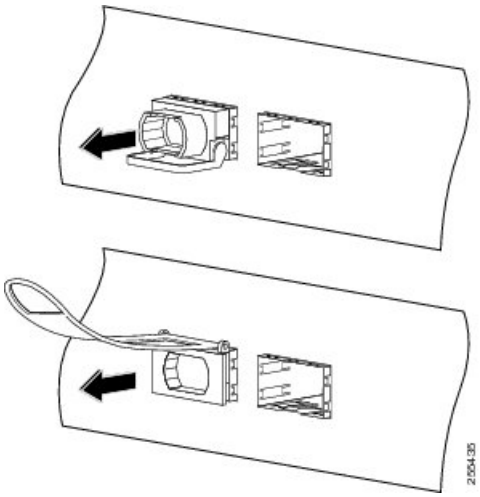

Step 4 Place the QSFP+ or QSFP28 transceiver module into an antistatic bag.

Connect Interface Ports

You can connect optical interface ports on line cards with other devices for network connectivity.

Connect a Fiber-Optic Port to the Network

Depending on the line card model that you are using, you can use either QSFP+ or QSFP28 transceivers. Some transceivers work with fiber-optic cables that you attach to the transceivers and other transceivers work with pre-attached copper cables. When installing fiber-optic cables for a port, you must install SFP transceivers for 1-Gigabit optical ports or install SFP+ transceivers for 10-Gigabit optical ports or QSFP+ transceivers for 100-Gigabit ports before installing the fiber-optic cable in the transceivers.

⚠

Caution Removing and installing a transceiver can shorten its useful life. Do not remove and insert transceivers more than it is absolutely necessary. We recommended that you disconnect cables before installing or removing transceivers to prevent damage to the cable or transceiver.

Disconnect Optical Ports from the Network

When you need to remove fiber-optic transceivers, you must first remove the fiber-optic cables from the transceiver before you remove the transceiver from the port.

Maintain Transceivers and Optical Cables

To maintain high signal accuracy and to prevent damage to the connectors, transceivers and fiber-optic cables must be kept clean and free of dust. Attenuation (loss of light) is increased by contamination and should be below 0.35 dB.

Consider the following maintenance guidelines:

- Transceivers are static sensitive. To prevent ESD damage, wear an ESD-preventative wrist strap that is connected to the grounded chassis.
- Do not remove and insert a transceiver more than it is necessary. Repeated removals and insertions can shorten its useful life.
- Keep all optical connections covered when not in use. Clean them before use to prevent dust from scratching the fiber-optic cable ends.
- Do not touch the ends of connectors. Touching the ends would leave fingerprints and cause other contamination.
- Clean the connectors regularly; the required frequency of cleaning depends upon the environment. In addition, clean connectors if they are exposed to dust or have been accidentally touched. Both wet and dry cleaning techniques can be effective; refer to your site's fiber-optic connection cleaning procedures.
- Inspect routinely for dust and damage. Clean and then inspect fiber ends under a microscope to determine whether any damage has occurred.

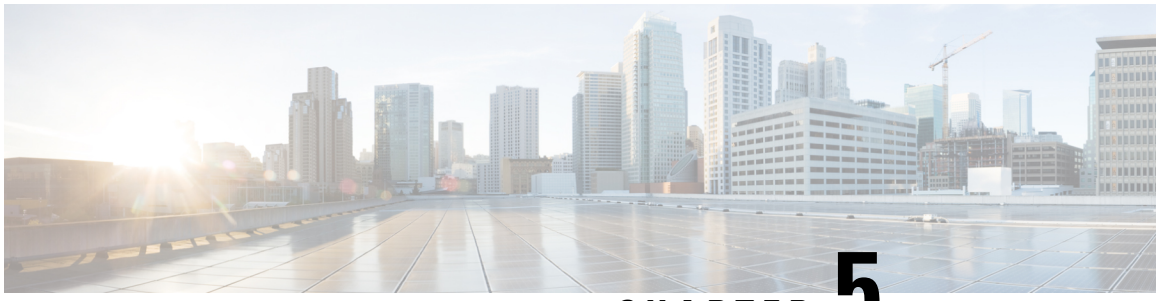

CHAPTER 5

Configure the Device

Before you begin this task, ensure that you have read and understood the safety warnings in the Safety with Electricity section of the Safety Warnings handout topic.

Configuring the Cisco NCS 540 involves these tasks:

- Create the Initial Router Configuration, on page 69
- Verify Device Installation, on page 71

Create the Initial Router Configuration

You must assign an IP address to the router management interface so that you can then connect the router to the network.

When you initially power up the router, it boots up and asks a series of questions to help configure the router. To enable you to connect the router to the network, you can use the default choices for each configuration except for the IP address, which you must provide.

Note These routers are designed to boot up in less than 30 minutes, provided the neighboring devices are in full operational state.

Note Be aware of the router's unique name to identify it among the other devices in the network.

Before you begin

- A console device must be connected with the router.
- The router must be connected to a power source.
- Determine the IP address and netmask needed for the Management interfaces: `MgmtEth0/RP0/CPU0/0` and `MgmtEth0/RP1/CPU0/0`:

Step 1 Power up the router.

The LEDs on each power supply light up (green) when the power supply units are sending power to the router, and the software asks you to specify a password to use with the router.

Step 2 When the system is booted up for the first time, a new username and a password is to be created. The following prompt appears:

```
!!!!!!!!!!!!!!!!!!!! NO root-system username is configured. Need to configure root-system username.
 !!!!!!!!!!!!!!!!!!!!

--- Administrative User Dialog ---


Enter root-system username:
% Entry must not be null.

Enter root-system username: root
Enter secret:
Use the 'configure' command to modify this configuration.
User Access Verification

Username: root
Password:


RP/0/RP0/CPU0:ios#
```

Step 3 Enter a new password to use for this router.

The software checks the security strength of it and rejects your password if it is not considered to be a strong password. To increase the security strength of your password, make sure that it adheres to the following guidelines:

- At least eight characters
- Minimizes or avoids the use of consecutive characters (such as "abcd")
- Minimizes or avoids repeating characters (such as "aaa")
- Does not contain recognizable words from the dictionary
- Does not contain proper names
- Contains both uppercase and lowercase characters
- Contains both numbers and letters

Note Clear text passwords cannot include the dollar sign ($) special character.

Tip If a password is trivial (such as a short, easy-to-decipher password), the software rejects the password configuration. Be sure to configure a strong password as described by the guidelines in this step. Passwords are case sensitive.

If you enter a strong password, the software asks you to confirm the password.

Step 4 Reenter the password.

When you enter the same password, the software accepts the password .

Step 5 Enter the IP address for the management interface.

Step 6 Enter a network mask for the management interface.

Step 7 The software asks whether you want to edit the configuration. Enter **no** to not edit the configuration.

Step 8 The software asks whether you want to save the configuration. Enter **yes** to save the configuration.

Verify Device Installation

After installing the Cisco NCS 540 Router, you can use the **show** commands to verify the installation and configuration. If any issue is detected, take corrective action before making further configurations.

Step 1 **show inventory**

Example:

```
#show inventory
```

Displays information about the field replaceable units (FRUs), including product IDs, serial numbers, and version IDs.

Step 2 **admin show environment**

Example:

```
#admin show environment
```

Displays all environment-related router information.

Step 3 **show environment temperature**

Example:

```
#show environment temperature
```

Displays temperature readings for card temperature sensors. Each system controller, route processor, line card, and fabric card has temperature sensors with two thresholds:

- Minor temperature threshold: when a minor threshold is exceeded, a minor alarm occurs and the following actions occur for all four sensors:
  - System messages displayed
  - SNMP notifications (if configured) sent
  - Log environmental alarm event triggered (can be reviewed by running the show alarm command).
- Major temperature threshold: when a major threshold is exceeded, a major alarm occurs and the following actions occur:
  - For sensors 1, 3, and 4 (outlet and onboard sensors), the following actions occur:
    - System messages displayed
    - SNMP notifications (if configured) sent
    - Log environmental alarm event triggered (can be reviewed by running the show alarm command).
  - For sensor 2 (intake sensor), the following actions occur:
    - If the threshold is exceeded in a switching card, only that card is shut down.

- If the threshold is exceeded in an active route processor card with HA-standby or standby present, only that route processor card is shut down and the standby route processor card takes over.
- If you do not have a standby route processor card in your router, you have up to 2 minutes to decrease the temperature. During this interval, the software monitors the temperature every 5 seconds and continuously sends system messages as configured.

Note We recommend that you install dual route processor cards. If you are using a router without dual route processor cards, we recommend that you immediately replace the fan card even if just one fan is not working.

Step 4 **hw-module location <loc> shutdown** or **[no] hw-module shutdown location <loc>**

Example:

```
#hw-module location <loc> shutdown
```

Powers up or shuts down a card gracefully.

Step 5 **show environment power**

Example:

```
#show environment power
```

Displays the power usage information for the entire router.

Step 6 **show environment voltage**

Example:

```
#show environment voltage
```

Displays the voltage for the entire router.

Step 7 **show environment current**

Example:

```
#show environment current
```

Displays the current environment status.

Step 8 **show environment fan**

Example:

```
#show environment fan
```

Displays the status of the fan trays.

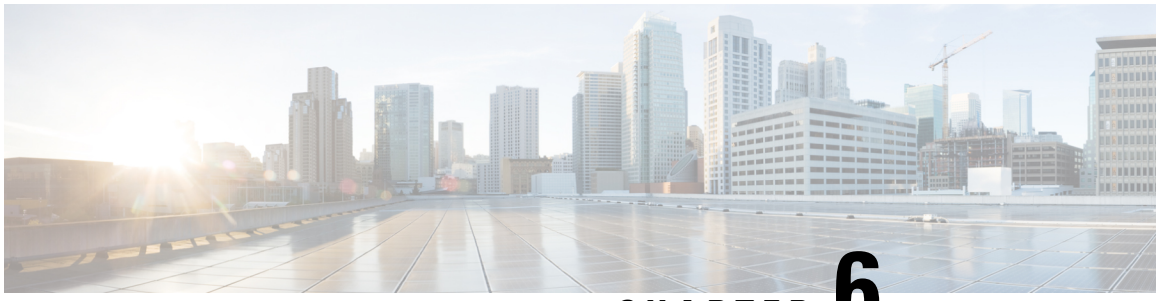

CHAPTER 6

Replace Fan Module and Power Supply

Before you begin this task, ensure that you have read and understood the safety warnings in the Safety with Electricity section of the Safety Warnings handout topic.

Note Replacing the fan module is applicable only for Cisco N540X-16Z4G8Q2C-A/D, N540-24Z8Q2C-SYS, N540X-ACC-SYS, and N540-ACC-SYS variants.

Note Replacing power supply module is applicable only for Cisco N540-24Z8Q2C-SYS, N540X-ACC-SYS, and N540-ACC-SYS variants.

- Replace Fan Module, on page 73
- Replace Power Supply, on page 74

Replace Fan Module

Caution If you cannot replace a fan tray within three minutes, we recommend that you leave it in the chassis until you are prepared to replace it within that specified time limit.

Note If you remove more than one fan tray at a time during operations, the router allows up to 2 minutes of operations before shutting down, unless you replace extra missing fan trays within that time. If the router senses an over temperature condition when multiple fan trays are removed, the shutdown can occur in less than 2 minutes.

Step 1 Unscrew the captive thumbscrew at the front of the fan tray.

Figure 50: Remove Fan Module from the Chassis

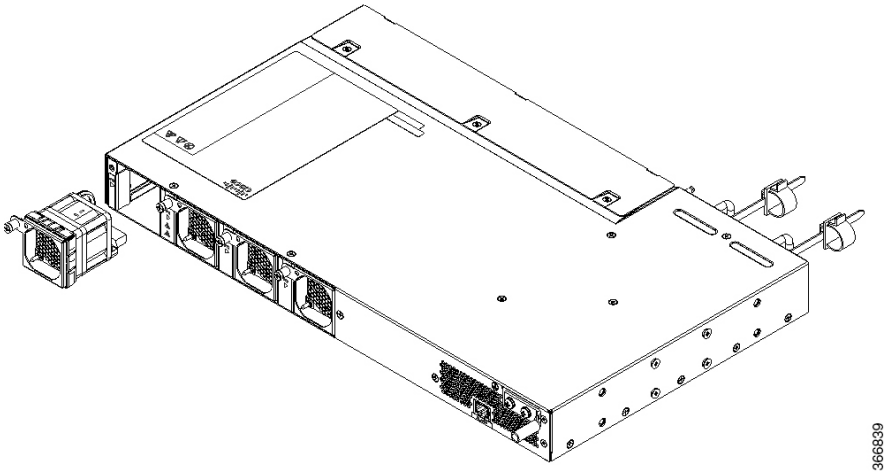

Figure 51: Remove Fan Tray from the Chassis (N540X-16Z4G8Q2C-A)

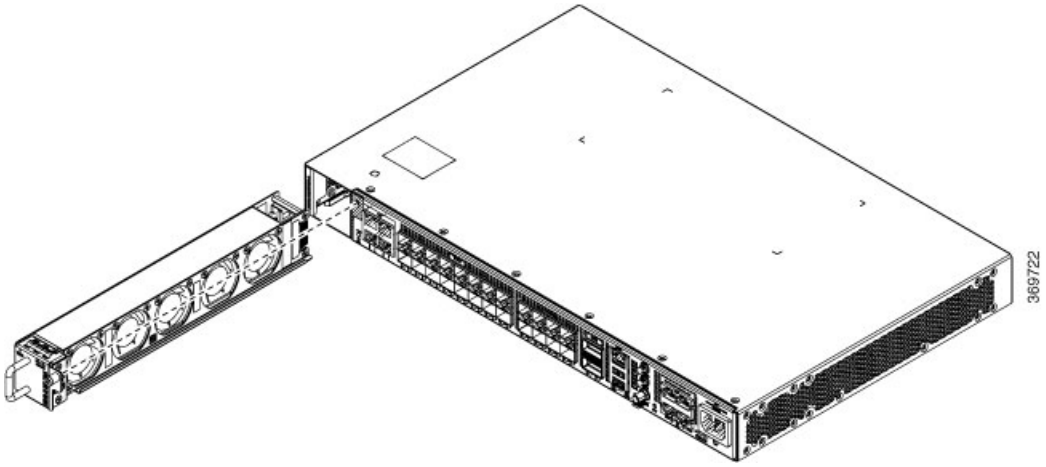

Step 2 Pull the fan tray to remove the fan tray to be replaced.

Step 3 Hold the fan module with the LED and PID label at the top.

Step 4 Align the fan module to the open fan tray slot in the chassis and press the module all the way into the slot until the left and right latches click and lock on the chassis.

Step 5 If the chassis is powered on, listen for the fans. You should immediately hear them in operation. If you do not hear them, ensure that the fan module is inserted completely in the chassis.

Step 6 Verify that the fan module LED is green. If the LED is not green, one or more fans are faulty.

Replace Power Supply

The router provides a choice of two different power supplies:

- DC power—The DC power supply uses two-position terminal block-style connector with positive latching or securing, and labeled connections for +24/48V, GRD, -24/48V. The terminal block connector is of suitable size to carry the appropriate AWG wire size to handle the input current of the power supply. No ON/OFF switch is provided.
- AC power—The AC power supply has an IEC 320-type power receptacle and a 15 Amp service connector. You can use standard right angle power cords with the AC power supply. The power supply includes a power cord retainer. No ON/OFF switch is provided.

You can install dual power supplies for redundancy.

Note Products that have an AC power connection are required to have an external SPD provided as part of the building installation to comply with the Telcordia GR-1089 NEBS standard for electromagnetic compatibility and safety.

Caution Do not use interface module and power supply ejector handles to lift the chassis; using the handles to lift the chassis can deform or damage the handles.

Remove the DC Power Supply Module

This section provides information about removing and replacing the DC power supply.

Warning Before performing any of the following procedures, ensure that power is removed from the DC circuit. Statement 1003

Warning Only trained and qualified personnel should be allowed to install, replace, or service this equipment. Statement 1030

Follow these steps to remove and replace the DC power supply:

Step 1 Before servicing the power supply, switch off the circuit breaker in your equipment area. As an additional precaution, tape the circuit-breaker switch in the Off position.

Step 2 Slip on the ESD-preventive wrist strap that is included in the accessory kit.

Step 3 Switch the power supply circuit-breaker switch to the Off (O) position.

Step 4 Pull the terminal block plug connector out of the terminal block head in the power supply. (See the following figure.)

Step 5 Loosen the captive screws on the DC power supply.

Step 6 Grasp the power supply handle. Press the power supply lock towards the left and simultaneously pull the power supply out from the chassis while supporting it with the other hand.

Install the DC Power Supply Module

This equipment is suitable for installation in Network Telecommunications Facilities and locations where the NEC applies.

This equipment is suitable for installations utilizing the Common Bonding Network (CBN).

The grounding architecture of this product is DC-Isolated (DC-I) for DC-powered products. DC-powered products have a nominal operating DC voltage of 48 VDC.

Perform the following procedure to install the power supply module:

Step 1 Ensure that the system (earth) ground connection has been made. See the following figure.

Step 2 If necessary, remove the blank power supply filler plate from the chassis power supply bay opening by loosening the captive installation screws.

Step 3 Verify that power to the DC circuit connected to the power supply you are installing is off. To ensure that power has been removed from the DC circuits, locate the circuit breakers for the DC circuits, switch the circuit breakers to the OFF position, and tape the circuit-breaker switches in the OFF position.

Step 4 Grasp the power supply handle with one hand. Place your other hand underneath the power supply. Slide the power supply into the power supply bay. Make sure that the power supply is fully seated in the bay.

Step 5 Tighten the captive installation screws of the power supply. The recommended maximum torque is 5.5 in.-lb (0.62 N-m).

Figure 52: Install DC Power Supply Module

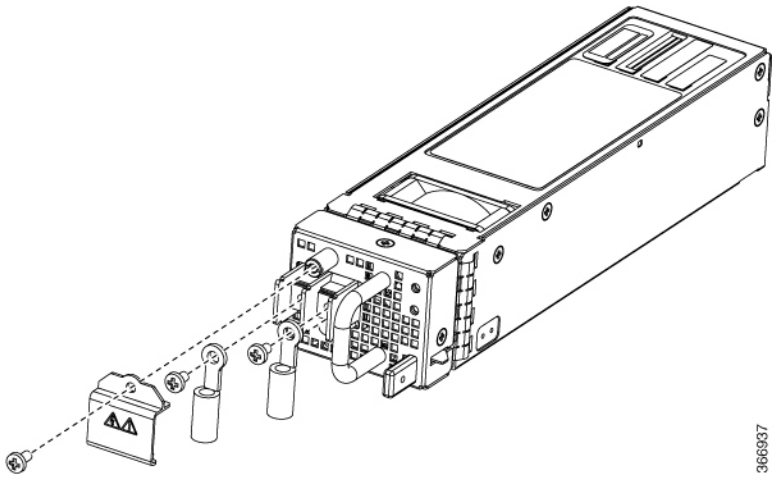

Remove the AC Power Supply Module

This section describes how to remove and replace the AC power supply.

Warning When you install the unit, the ground connection must always be made first and disconnected last. Statement 1046

Warning Only trained and qualified personnel should be allowed to install, replace, or service this equipment. Statement 1030

Warning Installation of the equipment must comply with local and national electrical codes. Statement 1074

Follow these steps to remove and replace the AC power supply:

Step 1 Disconnect the power cord from the power source. Do not touch any metal on the power cord when it is still connected to the power supply.

Step 2 Loosen the tie and remove the power cord from the tie-and holder.

Step 3 Remove the power cord from the power connection on the power supply. Do not touch the metal prongs embedded in the power supply.

Step 4 Grasp the power supply handle. Press the power supply lock towards the left and simultaneously pull the power supply out from the chassis while supporting it with the other hand.

Install the AC Power Supply Module

Follow these steps to install the AC power supply module:

Step 1 Ensure that the system (earth) ground connection has been made.

Step 2 If necessary, remove the blank power supply filler plate from the chassis power supply bay opening by loosening the captive installation screws.

Step 3 Grasp the power supply handle with one hand. Place your other hand underneath the power supply. Slide the power supply into the power supply bay. Make sure that the power supply is fully seated in the bay. See the following figure.

Figure 53: Install AC Power Supply Module

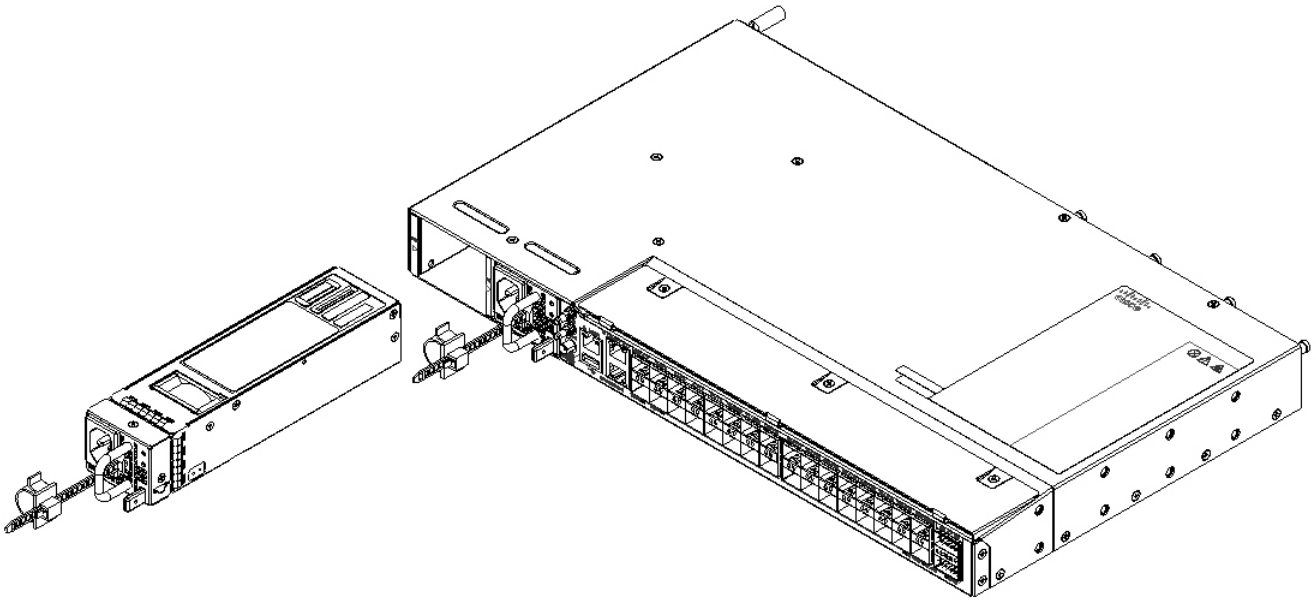

366838

Step 4 Slide the AC power supply cord inside the tie of the tie-and-holder and tighten the tie around the power supply cord.

Step 5 Plug the power supply cord into the AC power supply.

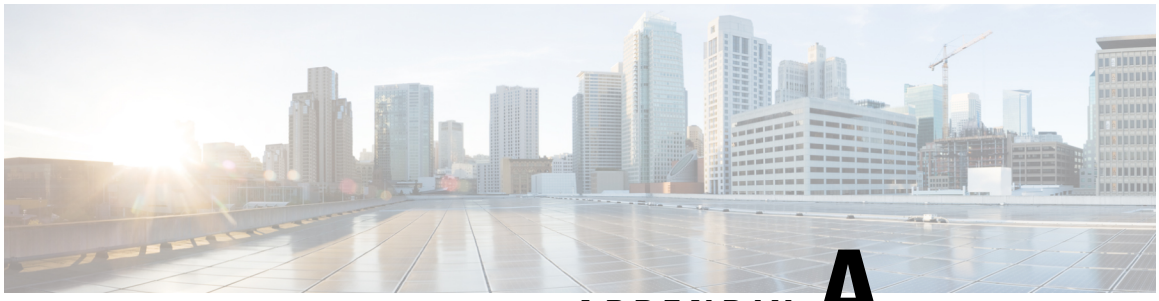

APPENDIX A

Appendix

Certain troubleshooting aids of the Cisco NCS 540 enable you to perform these tasks that assist the troubleshooting process:

- LEDs, on page 79
- System Specifications, on page 84

LEDs

Note The Cisco NCS 540 Router LEDs are similar for most of the variants, and any differences between the routers are specifically called out.

Router LEDs

All the data port LEDs in the Cisco NCS 540 Router is at the front panel. There are 5 LEDs that reflect the different statuses of the system.

Note The following table is applicable only for Cisco N540-24Z8Q2C-SYS, N540X-ACC-SYS, and N540-ACC-SYS variants.

Table 15: Router LED Descriptions

LED	Color	Status
STATUS	Green	The module is operational and has no active major or critical alarms.
	Amber	Host kernel is booted and is ready to start SysAdmin VM.
	Red	Power-up failure is preventing the CPU from booting (set by hardware).
	Flashing Amber (Slow)	The module is booting up (set by IOFPGA).
	Flashing Amber (Fast)	The module is booting up (set by BIOS), shutting down, or the SysAdmin VM is being reloaded.
	Flashing Red	RP0 has active major or critical alarms.
	Off	The module is powered-off (set by hardware).
ALARM	Red	Critical alarm - system-scope (including RP0).
	Flashing Red	Critical alarm - Relating to voltage rail failures.
	Amber	Major alarm - system-scope (including RP0).
	Flashing Amber	Minor alarm - system-scope (including RP0).
	Off	No alarm.
SYNC	Green	Time core is synchronized to an external source including IEEE1588.
	Flashing Green	System is in Synchronous Ethernet mode.
	Amber	Acquiring state or Holdover: Time core is in acquiring state or holdover mode.
	Off	Time core clock synchronization is disabled or in free-running state.
STATUS + ALARM (Both LEDs)	Flashing Red	Secure Boot boot flash contents validation failed. (set by IOFPGA). This case is only applicable immediately after power-on.
TIMING	Off	GPS config and GPS port is down. Time-of-day (ToD), 1PPS, and 10 MHz ports are not provisioned or disabled.
	Amber	ToD, 1PPS, and 10 MHz signals are not valid.
	Green	GPS port is up. ToD, 1PPS, and 10 MHz signals are valid.

LED	Color	Status
GNSS	Off	GNSS is not configured.
	Green	GNSS Normal State. Self-survey is complete.
	Red	Power up. GNSS is not tracking any satellite.
	Amber	Auto holdover.
	Flashing Green	Learning state–normal. Self-survey is not completed.

Note The following table is applicable only for Cisco N540X-16Z4G8Q2C-A/D and N540-12Z20G-SYS-A/D variants.

Table 16: Router LED Descriptions

LED	Color	Status
Alarm	Red	Critical alarm - system-scope (including RP0).
	Amber	Major alarm - system-scope (including RP0).
	Flashing Amber	Minor alarm - system-scope (including RP0).
	Off	No alarm.
Status	Green	The module is operational but has no active major or critical alarms.
	Amber	Host kernel booted and XR is booting.
	Flashing Red	Not Applicable.

Fan Assembly LEDs

Cisco NCS 540 has 4 fans at the back panel. There is an LED on each fan assembly and they reflect the different status of the fans.

Note The following table is applicable only for Cisco N540-24Z8Q2C-SYS, N540X-ACC-SYS, and N540-ACC-SYS variants.

Table 17: Fan Assembly LED Descriptions

LED	Color	Status
STATUS	Green	Fans are operating normally.
	Amber	Single fan failure.
	Red	More than one fan failure or a single PSU fan failure.
	Off	Fan tray is not receiving power.

Note The following table is applicable only for Cisco N540-28Z4C-SYS-A/D, N540-12Z20G-SYS-A/D, N540X-12Z16G-SYS-A/D, and N540X-16Z4G8Q2C-A/D variants.

Table 18: Fan Assembly LED Descriptions

LED	Color	Status
STATUS	Green	Fans are operating normally.
	Amber	Single fan failure.
	Red	More than one or single fan failure or single PSU fan failure (only on N540-28Z4C-SYS-A/D and N540-12Z20G-SYS-A/D variants) and missing fan tray (only on N540X-16Z4G8Q2C-A/D variant).

Power Supply LEDs

Note The following table is applicable only for Cisco N540-24Z8Q2C-SYS, N540X-ACC-SYS, and N540-ACC-SYS variants.

Table 19: Power Supply LED Descriptions

POWER LED	FAIL LED	Power Supply Condition
Green	Off	Power Supply ON; valid input/output.

POWER LED	FAIL LED	Power Supply Condition
Amber 1Hz flashing	Red 1Hz flashing	PSU Warning due to: • Over current • Over temperature • Under voltage • Over voltage • Over power • Fan failure
Off	On	PSU failure due to: • Over current • Over temperature • Under voltage • Over voltage • Over power • Fan failure
Green 1Hz flashing	Off	Power supply is not plugged in to the chassis or shutdown by the system.
Off	Off	No valid power input.
Amber	Off	Low input voltage.

Note The following table is applicable only for Cisco N540-28Z4C-SYS-A/D, N540-12Z20G-SYS-A/D, N540X-12Z16G-SYS-A/D, and N540X-16Z4G8Q2C-A/D variants.

Table 20: Power Supply LED Descriptions

LED	Color	Status
STATUS	Green	Power Supply ON and operating normally.
	Off	Not receiving power or PSU-12V fail or 3V3 STDBY failure.
	Red	Power failure with one of the input power feeds failed or one of the on-board voltage rails has failed.
	Amber	STDBY FPGA upgrade is in progress due to post Reload/Power cycle after HW FPD upgrade All. **Note** Upgrade of the STDBY FPGA takes 3–5 minutes.

Fan Assembly and Power Supply LED Combination

Note The following table is applicable only for Cisco N540-28Z4C-SYS-A/D, N540-12Z20G-SYS-A/D, N540X-12Z16G-SYS-A/D, and N540X-16Z4G8Q2C-A/D variants.

Table 21: Fan Assembly and Power Supply LED Combination Descriptions

Fan LED	Power LED	Status
Off	Red	Power failure with one of the input power feeds failed or one of the on-board voltage rails has failed.
—	Amber	STDBY FPGA upgrade is in progress due to post Reload/Power cycle after HW FPD upgrade All. **Note** Upgrade of the STDBY FPGA takes 3–5 minutes.
Green	Flashing Amber	Thermal shutdown with no fan
Flashing Red	Flashing Red	Thermal shutdown
Flashing Red	Flashing Amber	MSS Ready=0
Flashing Amber	Flashing Green	TAM init fail
Flashing Amber	Flashing Red	TAM Not Ready
Flashing Amber	Flashing Amber	SECURE JTAG Fail
Flashing Green	Flashing Green	BIOS Validation Failure
Off	Green	Power Supply ON and operating normally.

System Specifications

Certain troubleshooting aids of the Cisco NCS 540 enable you to perform these tasks that assist the troubleshooting process:

Weight and Power Consumption

For information on physical specifications and power consumption, see table *Cisco NCS 540 chassis specification* on the Cisco Network Convergence System 540 Router Data Sheet.

Environmental Specifications

For information on environmental specifications, see table *Environmental properties for NCS 540 fixed systems* on the Cisco Network Convergence System 540 Router Data Sheet.

Transceiver and Cable Specifications

To determine which transceivers and cables are supported by this router, see Cisco Transceiver Modules Compatibility Information.

To see the transceiver specifications and installation information, see Cisco Transceiver Modules Install and Upgrade Guides.

RJ-45 Connectors

The RJ-45 connector connects Category 3, Category 5, Category 5e, Category 6, or Category 6A foil twisted-pair or unshielded twisted-pair cable from the external network to the following module interface connectors:

- Router chassis
  - CONSOLE port
  - MGMT ETH port

Caution To comply with GR-1089 intrabuilding, lightning immunity requirements, you must use a foil twisted-pair (FTP) cable that is properly grounded at both ends.

The following figure shows the RJ-45 connector.

Figure 54: RJ-45 Connector

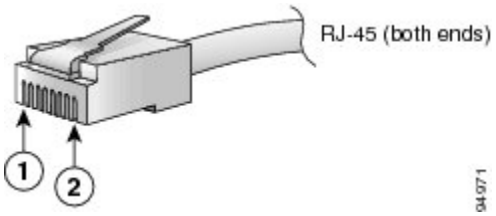

1	Pin 1	2	Pin 2

GPS Port Pinouts

The platform is capable of receiving or sourcing GPS signals of 1 PPS & 10 MHz. These interfaces are provided by two mini-coax 50-Ohm, 1.0/2.3 DIN series connector on the front panel. Similarly there are two mini-coax 50-Ohm connectors provided in the front panel to output this 1PPS and 10MHz.

This table below summarizes the GPS port pinouts:

Table 22: GPS Port Pinouts

	10 MHz (Input and Output)	1PPS (Input and Output)
Waveform	Input—Sine wave Output—Square wave	Input—Rectangular pulse Output—Rectangular pulse
Amplitude	Input— > 1.7 volt p-p(+8 to +10 dBm) Output— > 2.4 volts TTL compatible	Input— > 2.4 volts TTL compatible Output— > 2.4 volts TTL compatible
Impedance	50 ohms	50 ohms
Pulse Width	50% duty cycle	26 microseconds
Rise Time	Input—AC coupled Output—5 nanoseconds	40 nanoseconds

Time-of-Day Port Pinouts

This table summarizes the ToD/1-PPS port pinouts:

Table 23: RJ-45 ToD/1-PPS Port Pinouts

Pin	Signal Name	Direction	Description
1	–	–	–
2	–	–	–
3	1PPS_N	Output or Input	1PPS RS422 signal
4	GND	–	–
5	GND	–	–
6	1PPS_P	Output or Input	1PPS RS422 signal
7	TOD_N	Output or Input	Time-of-Day character
8	TOD_P	Output or Input	Time-of-Day character

BITS Interface

This table summarizes the BITS interface RJ48 port pinouts:

Table 24: BITS Interface RJ48 Port Pinouts

Pin	Signal Name	Direction	Description
1	RX Ring	Input	Receive Ring
2	RX TIP	Input	Receive TIP (T1/E1)
3, 6, 7, 8	—	NC	—
4	TX Ring	Output	Transmit Ring
5	TX TIP	Output	Transmit TIP (T1/E1)

Management and PTP Ethernet Port Pinouts

This following table summarizes the Management and Precision Time Protocol (PTP) Ethernet port pinouts:

Table 25: Management and PTP Ethernet Port Pinouts

Pin	Signal Name
1	TRP0+
2	TRP0-
3	TRP1+
4	TRP1-
5	TRP2+
6	TRP2-
7	TRP3+
8	TRP3-

USB Flash or MEM Port Pinouts

This following table summarizes the USB flash or MEM port pinouts:

Table 26: USB Flash or MEM Port Pinouts

Pin	Signal Name	Description
A1	Vcc	+5 VDC
A2	D-	Data -

Pin	Signal Name	Description
A3	D+	Data +
A4	Gnd	Ground

Alarm Port Pinouts

The following table summarizes the external alarm input pinouts for the following NCS 540 router variants:

- N540-ACC-SYS
- N540X-ACC-SYS
- N540-24Z8Q2C-M
- N540-28Z4C-SYS

Table 27: External Alarm Input Pinouts

Pin	Signal Name	Description
1	ALARM0_IN	Alarm input 0
2	ALARM1_IN	Alarm input 1
3	—	No connect
4	ALARM2_IN	Alarm input 2
5	ALARM3_IN	Alarm input 3
6	—	No connect
7	—	No connect
8	COMMON	Alarm common

The following table summarizes the external alarm input pinouts for the following NCS 540 router variants:

- N540-28Z4C-SYS-A/D
- N540X-16Z4G8Q2C-A/D
- N540-12Z20G-SYS-A/D
- N540X-12Z16G-SYS-A/D

Table 28: External Alarm Input Pinouts

Pin	Signal Name	Description
1	ALARM0_IN	Alarm input 0

Pin	Signal Name	Description
2	ALARM1_IN	Alarm input 1
3	—	Alarm output closed
4	ALARM2_IN	Alarm input 2
5	ALARM3_IN	Alarm input 3
6	—	Alarm output open
7	—	Alarm output COM
8	—	Alarm input COM

Effective Cisco IOS XR Release 7.3.1, you can enable external alarms for external doors, voltage, fire, thermal, and water sensors on the following variants of Cisco NCS 540:

- N540-24Z8Q2C-SYS
- N540X-ACC-SYS
- N540-ACC-SYS
- N540-28Z4C-SYS-A/D
- N540-12Z20G-SYS-A/D

In *sysadmin* mode, use the **alarm-contact** *contact-number* **desc** *string* **severity** {**critical** | **major** | **minor**} command to set the severity and provide a description of the alarm.



Note You can configure up to four external alarms.

The *contact-number* is the pin number of the connected alarm port, that is Alarm input 0 to Alarm input 3.

The **description** string can be up to 80 alphanumeric characters in length and is included in any generated system messages.

For **severity**, enter any one of: **critical**, **major**, or **minor**.

Description and severity are both mandatory values.

Use the **show alarms** command in admin mode to view the alarm details. Use the **show logging** command to view the displays the state of syslog error and event logging.

An SNMP trap is sent for every external alarm that is raised or cleared on the system.

Console Port Pinouts

The following table summarizes the Console port pinouts.

Note The following table is applicable only for Cisco N540-24Z8Q2C-SYS, N540X-ACC-SYS, and N540-ACC-SYS variants.

Table 29: Console Port Pinouts

Pin	Signal Name	Direction	Description
1	Loop1	NA	Loopback 1
2	Loop2	NA	Loopback 2
3	TxD	Output	Console RS232 transmit
4	Gnd	NA	Ground
5	Gnd	NA	Ground
6	RxD	Input	Console RS232 receive
7	Loop2	NA	Loopback 2
8	Loop1	NA	Loopback 1

Note The following table is applicable only for Cisco N540-28Z4C-SYS-A/D, N540-12Z20G-SYS-A/D, N540X-12Z16G-SYS-A/D, and N540X-16Z4G8Q2C-A/D variants.

Table 30: Console Port Pinouts

Pin	Signal Name	Direction	Description
1	ACONS-TX	Output	Aux Consoles transmit output, RS232
2	NC	NA	Receive TIP (T1/E1)
3	CONS-TX	Output	Console RS232 transmit
4	Gnd	NA	Ground
5	Gnd	NA	Ground
6	CONS-RX	Input	Console RS232 receive
7	ACONS-RTX	Input	Aux Consoles receive input, RS232
8	NC	NA	NA

AC Power Cord Specifications

For more information on the supported power cables, see *Ordering information for power cables supported on NCS 540* on the Cisco Network Convergence System 540 Small Density Router Data Sheet.