EPSON
EXCEED YOUR VISION

ET-5800 / L6550 Series

User's Guide

Printing

Copying

Scanning

Faxing

Maintaining the Printer

Solving Problems

NPD6355-03 EN

Contents

Guide to This Manual

Introduction to the Manuals. 7
Searching for Information. 7
Printing Only the Pages You Need. 8
About This Manual. 8
Marks and Symbols. 8
Notes on Screenshots and Illustrations. 9
Operating System References. 9
Trademarks. 10
Copyright. 11

Important Instructions

Safety Instructions. 13
Safety Instructions for Ink. 14
Printer Advisories and Warnings. 14
Advisories and Warnings for Setting Up the Printer. 14
Advisories and Warnings for Using the Printer. . 15
Advisories and Warnings for Using the Touchscreen. 15
Advisories and Warnings for Using the Printer with a Wireless Connection. 15
Advisories and Warnings for Transporting or Storing the Printer. 16
Protecting Your Personal Information. 16

Part Names and Functions

Front. 18
Inside. 20
Rear. 21

Guide to the Control Panel

Control Panel. 23
Home Screen Configuration. 23
Guide to the Network Icon. 25
Menu Screen Configuration. 25
Job/Status Screen Configuration. 26
Entering Characters. 27
Viewing Animations. 27

Loading Paper

Paper Handling Precautions. 30
Paper Size and Type Settings. 30
List of Paper Type. 31
Loading Paper. 31
Loading Pre-punched Paper. 32
Loading Long Papers. 33

Placing Originals

Placing Originals. 35
Originals that are not Supported by the ADF. 36

Inserting and Removing a Memory Device

Inserting an External USB Device. 38
Removing an External USB Device. 38
Sharing Data on a Memory Device. 39

Printing

Printing Documents. 41
Printing from a Computer - Windows. 41
Printing from a Computer - Mac OS. 64
Printing Documents from Smart Devices (iOS). . 72
Printing Documents from Smart Devices (Android). 74
Printing on Envelopes. 75
Printing on Envelopes from a Computer (Windows). 75
Printing on Envelopes from a Computer (Mac OS). 76
Printing Photos. 76
Printing JPEG Files from a Memory Device. 76
Printing TIFF Files from a Memory Device. 77
Printing Web Pages. 78
Printing Web Pages from a Computer. 78
Printing Web Pages from Smart Devices. 78
Printing Using a Cloud Service. 79
Registering to Epson Connect Service from the Control Panel. 80

Copying

Available Copying Methods. 82
Copying Originals. 82
Copying on 2-Sides. 82
Copying by Enlarging or Reducing. 83
Copying Multiple Originals onto One Sheet. 84
Copying in Page Order. 85

Copying Originals Using Good Quality. 85
Copying ID card. 86
Basic Menu Options for Copying. 86
Color Mode:. 86
Density:. 86
Paper Setting:. 87
Reduce/Enlarge:. 87
Original Type:. 87
2-Sided:. 87
Advanced Menu Options for Copying. 88
Multi-Page:. 88
Original Size:. 88
Finishing:. 88
Orientation (Original):. 88
Image Quality:. 89
Binding Margin:. 89
Reduce to Fit Paper:. 89
Remove Shadow:. 89
Remove Punch Holes:. 89
ID Card Copy:. 89

Scanning

Available Scanning Methods. 91
Scanning Originals to a Network Folder. 91
Destination Menu Options for Scanning to a Folder. 92
Scan Menu Options for Scanning to a Folder. . . . 93
Scanning Originals to an Email. 94
Recipient Menu Options for Scanning to an Email. 95
Scan Menu Options for Scanning to an Email. . . 95
Scanning Originals to a Computer. 97
Scanning Originals to a Memory Device. 98
Basic Menu Options for Scanning to a Memory Device. 98
Advanced Menu Options for Scanning to a Memory Device. 99
Scanning Originals to the Cloud. 100
Basic Menu Options for Scanning to the Cloud. 100
Advanced Menu Options for Scanning to the Cloud. 101
Scanning Using WSD. 102
Setting Up a WSD Port. 102
Scanning Originals to a Smart Device. 104

Faxing

Before Using Fax Features. 106
Overview of this Printer's Fax Features. 106
Feature: Sending Faxes. 106
Feature: Receiving Faxes. 107
Feature: PC-FAX Send/Receive (Windows/Mac OS). 108
Features: Various Fax Reports. 109
Feature: Status or Logs for Fax Jobs. 109
Feature: Fax Box. 110
Feature: Security when Sending and Receiving Faxes. 110
Features: Other Useful Features. 110
Sending Faxes Using the Printer. 111
Selecting Recipients. 111
Various Ways of Sending Faxes. 112
Receiving Faxes on the Printer. 118
Receiving Incoming Faxes. 119
Receiving Faxes by Making a Phone Call. 120
Saving and Forwarding Received Faxes. 122
Viewing Received Faxes on the Printer's LCD Screen. 123
Menu Options for Faxing. 124
Recipient. 124
Fax Settings. 124
More. 126
Menu Options for Fax Box. 128
Inbox/Confidential. 128
Stored Documents:. 130
Polling Send/Board. 131
Checking the Status or Logs for Fax Jobs. 134
Displaying Information when Received Faxes are Unprocessed (Unread/Not Printed/Not Saved/Not Forwarded). 134
Checking Fax Jobs in Progress. 136
Checking the Fax Job History. 136
Reprinting Received Documents. 136
Sending a Fax from a Computer. 137
Sending Documents Created Using an Application (Windows). 137
Sending Documents Created Using an Application (Mac OS). 139
Receiving Faxes on a Computer. 141
Checking for New Faxes (Windows). 141
Checking for New Faxes (Mac OS). 143
Canceling the Feature that Saves Incoming Faxes to the Computer. 143

Maintaining the Printer

Checking the Status of Consumables. 145
Improving Print, Copy, Scan, and Fax Quality. . . . 145
Adjusting the Print Quality. 145

Checking and Cleaning the Print Head. 146
Running Power Cleaning. 147
Preventing nozzle clogging. 149
Aligning the Print Head (Control Panel). 149
Cleaning the Paper Path for Ink Smears. 150
Cleaning the Scanner Glass. 150
Cleaning the ADF. 151
Cleaning the Printer. 153
Cleaning Spilled ink. 154
Checking the Total Number of Pages Fed Through the Printer. 154
Checking the Total Number of Pages Fed Through the Printer (Control Panel). 155
Saving Power. 155
Saving Power (Control Panel). 155
Installing or Uninstalling Applications Separately. 155
Installing the Applications Separately. 156
Adding the Printer (for Mac OS Only). 158
Uninstalling Applications. 158
Updating Applications and Firmware. 160
Transporting and Storing the Printer. 162

Solving Problems

The Printer Does Not Work as Expected. 169
The Printer Does Not Turn On or Off. 169
Power Turns Off Automatically. 169
Paper Does Not Feed Properly. 169
Cannot Print. 174
Cannot Start Scanning. 190
Cannot Send or Receive Faxes. 202
Error Code is Displayed on the Status Menu. . . 217
Cannot Operate the Printer as Expected. 221
A Message is Displayed on the LCD Screen. 226
Paper Gets Jammed. 227
Preventing Paper Jams. 228
It is Time to Refill the Ink. 228
Ink Bottle Handling Precautions. 228
Refilling the Ink Tanks. 229
It is Time to Replace the Maintenance Box. 233
Maintenance Box Handling Precautions. 233
Replacing a Maintenance Box. 233
Printing, Copying, Scanning, and Faxing Quality is Poor. 235
Print Quality is Poor. 235
Copy Quality is Poor. 244
Scanned Image Problems. 251
The Quality of the Sent Fax is Poor. 253
Received Fax Quality is Poor. 255
Cannot Solve Problem After Trying All Solutions. .256
Cannot Solve Printing or Copying Problems. . . 256

Adding or Replacing the Computer or Devices

Connecting to a Printer that has been Connected to the Network. 259
Using a Network Printer from a Second Computer. 259
Using a Network Printer from a Smart Device. . 260
Re-setting the Network Connection. 260
When Replacing the Wireless Router. 260
When Changing the Computer. 261
Changing the Connection Method to the Computer. 262
Making Wi-Fi Settings from the Control Panel. .264
Connecting a Smart Device and Printer Directly (Wi-Fi Direct). 266
About Wi-Fi Direct. 266
Connecting to an iPhone, iPad or iPod touch using Wi-Fi Direct. 267
Connecting to Android Devices using Wi-Fi Direct. 270
Connecting to Devices other than iOS and Android using Wi-Fi Direct. 272
Disconnecting Wi-Fi Direct (Simple AP) Connection. 276
Changing the Wi-Fi Direct (Simple AP) Settings Such as the SSID. 276
Checking the Network Connection Status. 277
Checking the Network Connection Status from the Control Panel. 277
Printing a Network Connection Report. 278
Printing a Network Status Sheet. 284
Checking the Network of the Computer (Windows only). 284

Product Information

Paper Information. 287
Available Paper and Capacities. 287
Unavailable Paper Types. 292
Consumable Products Information. 292
Ink Bottle Codes. 292
Maintenance Box Code. 293
Software Information. 293
Software for Printing. 293
Software for Scanning. 297
Software for Faxing. 297
Software for Package Creation. 298

Software for Making Settings or Managing Devices. 299
Software for Updating. 301
Settings Menu List. 302
General Settings. 302
Print Counter. 322
Supply Status. 322
Maintenance. 322
Language. 324
Printer Status/Print. 324
Contacts Manager. 324
User Settings. 325
Product Specifications. 325
Printer Specifications. 325
Scanner Specifications. 326
ADF Specifications. 327
Fax Specifications. 327
Using Port for the Printer. 328
Interface Specifications. 330
Network Specifications. 330
Supported Third Party Services. 333
Memory Device Specifications. 333
Supported Data Specifications. 334
Dimensions. 334
Electrical Specifications. 335
Environmental Specifications. 335
Installation Location and Space. 336
System Requirements. 336
Regulatory Information. 337
Standards and Approvals. 337
Restrictions on Copying. 338

Administrator Information

Connecting the Printer to the Network. 341
Before Making Network Connection. 341
Connecting to the Network from the Control Panel. 343
Settings to Use the Printer. 345
Using the Print Functions. 345
Setting Up AirPrint. 351
Configuring a Mail Server. 352
Setting a Shared Network Folder. 356
Making Contacts Available. 372
Preparing to Scan. 383
Making Fax Features Available. 385
Making Basic Operation Settings for the Printer 400
Problems when Making Settings. 403
Managing the Printer. 405
Introduction of Product Security Features. 405
Administrator Settings. 406
Restricting Available Features. 414
Disabling the External Interface. 416
Monitoring a Remote Printer. 417
Backing Up the Settings. 419
Advanced Security Settings. 420
Security Settings and Prevention of Danger. . . . 420
Controlling Using Protocols. 422
Using a Digital Certificate. 426
SSL/TLS Communication with the Printer. 431
Encrypted Communication Using IPsec/IP Filtering. 432
Connecting the Printer to an IEEE802.1X Network. 444
Solving Problems for Advanced Security. 447

Where to Get Help

Technical Support Web Site. 455
Contacting Epson Support. 455
Before Contacting Epson. 455
Help for Users in Europe. 455
Help for Users in Australia. 455
Help for Users in New Zealand. 456
Help for Users in Indonesia. 457
Help for Users in Malaysia. 458
Help for Users in the Philippines. 459
Help for Users in Singapore. 459
Help for Users in Thailand. 460
Help for Users in Vietnam. 460

Guide to This Manual

Introduction to the Manuals. 7

Searching for Information. 7

Printing Only the Pages You Need. 8

About This Manual. 8

Trademarks. 10

Copyright. 11

Introduction to the Manuals

The following manuals are supplied with your Epson printer. As well as the manuals, check the various types of help information available from the printer itself or from the Epson software applications.

❏ Important Safety Instructions (paper manual)

Provides you with instructions to ensure the safe use of this printer.

❏ Start Here (paper manual)

Provides you with information on setting up the printer and installing the software.

❏ User's Guide (digital manual)

This manual. Provides overall information and instructions on using the printer, on network settings when using the printer on a network, and on solving problems.

You can obtain the latest versions of the above manuals with the following methods.

❏ Paper manual

Visit the Epson Europe support website at http://www.epson.eu/Support, or the Epson worldwide support website at http://support.epson.net/.

❏ Digital manual

This manual is available in PDF and HTML versions. You can view the HTML version from the epson.sn support page. Start EPSON Software Updater on your computer to view the PDF version. EPSON Software Updater checks for available updates of Epson software applications and the digital manuals, and allows you to download the latest ones.

http://epson.sn

Related Information

➡ "Application for Updating Software and Firmware (EPSON Software Updater)" on page 301

Searching for Information

The PDF manual allows you to search for information you are looking for by keyword, or jump directly to specific ections using the bookmarks. This section explains how to use a PDF manual that has been opened in Adobe Reader X on your computer.

Searching by keyword

Click **Edit** > **Advanced Search**. Enter the keyword (text) for information you want to find in the search window, and then click **Search**. Hits are displayed as a list. Click one of the displayed hits to jump to that page.

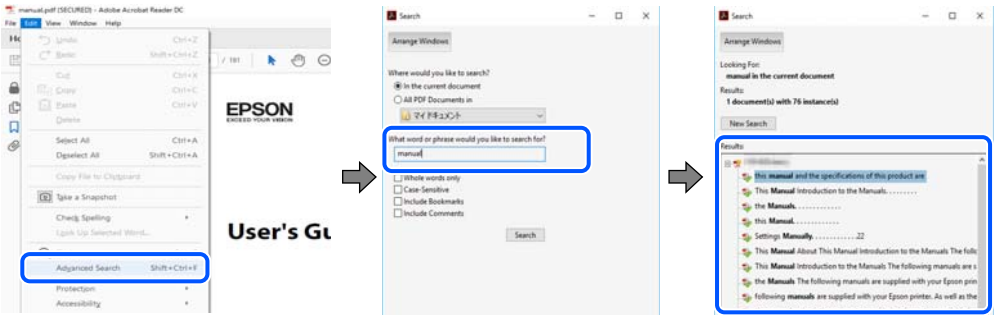

Jumping directly from bookmarks

Click a title to jump to that page. Click + or > to view the lower level titles in that section. To return to the previous page, perform the following operation on your keyboard.

❏ Windows: Hold down **Alt**. and then press ←.

❏ Mac OS: Hold down the command key, and then press ←.

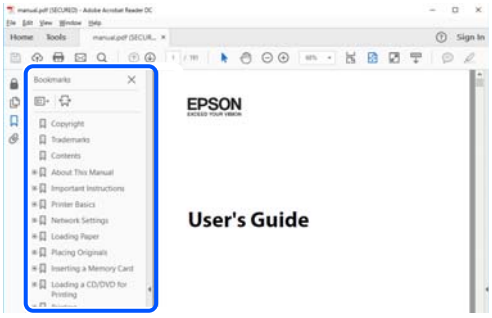

Printing Only the Pages You Need

You can extract and print only the pages you need. Click **Print** in the **File** menu, and then specify the pages you want to print in **Pages** in **Pages to Print**.

❏ To specify a series of pages, enter a hyphen between the start page and the end page.

Example: 20-25

❏ To specify pages that are not in series, divide the pages with commas.

Example: 5, 10, 15

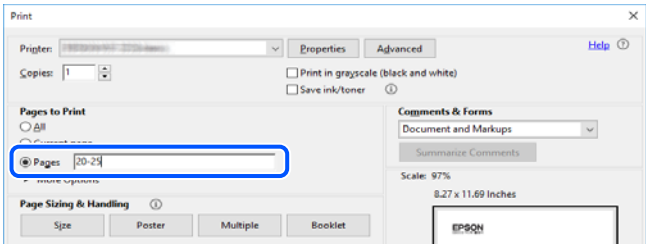

About This Manual

This section explains the meaning of marks and symbols, notes on descriptions, and operating system reference information used in this manual.

Marks and Symbols

> ⚠ ***Caution:***
>
> *Instructions that must be followed carefully to avoid bodily injury.*

Important:
Instructions that must be observed to avoid damage to your equipment.

Note:
Provides complementary and reference information.

Related Information

➡ Links to related sections.

Notes on Screenshots and Illustrations

- ❏ Screenshots of the printer driver are from Windows 10 or macOS High Sierra. The content displayed on the screens varies depending on the model and situation.
- ❏ Illustrations used in this manual are examples only. Although there may be slight differences depending on themodel, the method of operation is the same.
- ❏ Some of the menu items on the LCD screen vary depending on the model and settings.
- ❏ You can read the QR code using dedicated app.

Operating System References

Windows

In this manual, terms such as "Windows 10", "Windows 8.1", "Windows 8", "Windows 7", "Windows Vista", "Windows XP", "Windows Server 2019", "Windows Server 2016", "Windows Server 2012 R2", "Windows Server 2012", "Windows Server 2008 R2", "Windows Server 2008", "Windows Server 2003 R2", and "Windows Server 2003" refer to the following operating systems. Additionally, "Windows" is used to refer to all versions.

- ❏ Microsoft® Windows® 10 operating system
- ❏ Microsoft® Windows® 8.1 operating system
- ❏ Microsoft® Windows® 8 operating system
- ❏ Microsoft® Windows® 7 operating system
- ❏ Microsoft® Windows Vista® operating system
- ❏ Microsoft® Windows® XP operating system
- ❏ Microsoft® Windows® XP Professional x64 Edition operating system
- ❏ Microsoft® Windows Server® 2019 operating system
- ❏ Microsoft® Windows Server® 2016 operating system
- ❏ Microsoft® Windows Server® 2012 R2 operating system
- ❏ Microsoft® Windows Server® 2012 operating system
- ❏ Microsoft® Windows Server® 2008 R2 operating system
- ❏ Microsoft® Windows Server® 2008 operating system
- ❏ Microsoft® Windows Server® 2003 R2 operating system
- ❏ Microsoft® Windows Server® 2003 operating system

Mac OS

In this manual, "Mac OS" is used to refer to macOS Catalina, macOS Mojave, macOS High Sierra, macOS Sierra, OS X El Capitan, OS X Yosemite, OS X Mavericks, OS X Mountain Lion, Mac OS X v10.7.x, and Mac OS X v10.6.8.

Trademarks

- EPSON® is a registered trademark, and EPSON EXCEED YOUR VISION or EXCEED YOUR VISION is a trademark of Seiko Epson Corporation.
- Epson Scan 2 software is based in part on the work of the Independent JPEG Group.
- libtiff

  Copyright © 1988-1997 Sam Leffler

  Copyright © 1991-1997 Silicon Graphics, Inc.

  Permission to use, copy, modify, distribute, and sell this software and its documentation for any purpose is hereby granted without fee, provided that (i) the above copyright notices and this permission notice appear in all copies of the software and related documentation, and (ii) the names of Sam Leffler and Silicon Graphics may not be used in any advertising or publicity relating to the software without the specific, prior written permission of Sam Leffler and Silicon Graphics.

  THE SOFTWARE IS PROVIDED "AS-IS" AND WITHOUT WARRANTY OF ANY KIND, EXPRESS, IMPLIED OR OTHERWISE, INCLUDING WITHOUT LIMITATION, ANY WARRANTY OF MERCHANTABILITY OR FITNESS FOR A PARTICULAR PURPOSE.

  IN NO EVENT SHALL SAM LEFFLER OR SILICON GRAPHICS BE LIABLE FOR ANY SPECIAL, INCIDENTAL, INDIRECT OR CONSEQUENTIAL DAMAGES OF ANY KIND, OR ANY DAMAGES WHATSOEVER RESULTING FROM LOSS OF USE, DATA OR PROFITS, WHETHER OR NOT ADVISED OF THE POSSIBILITY OF DAMAGE, AND ON ANY THEORY OF LIABILITY, ARISING OUT OF OR IN CONNECTION WITH THE USE OR PERFORMANCE OF THIS SOFTWARE.
- QR Code is a registered trademark of DENSO WAVE INCORPORATED in Japan and other countries.
- Microsoft®, Windows®, Windows Server®, and Windows Vista® are registered trademarks of Microsoft Corporation.
- Apple, Mac, macOS, OS X, Bonjour, ColorSync, Safari, AirPrint, iPad, iPhone, iPod touch, and iTunes are trademarks of Apple Inc., registered in the U.S. and other countries.
- Use of the Works with Apple badge means that an accessory has been designed to work specifically with the technology identified in the badge and has been certified by the developer to meet Apple performance standards.
- Chrome, Google Play, and Android are trademarks of Google LLC.
- Adobe and Adobe Reader are either registered trademarks or trademarks of Adobe Systems Incorporated in the United States and/or other countries.
- Firefox is a trademark of the Mozilla Foundation in the U.S. and other countries.
- Mopria® and the Mopria® Logo are registered and/or unregistered trademarks and service marks of Mopria Alliance, Inc. in the United States and other countries. Unauthorized use is strictly prohibited.
- General Notice: Other product names used herein are for identification purposes only and may be trademarks of their respective owners. Epson disclaims any and all rights in those marks.

Copyright

No part of this publication may be reproduced, stored in a retrieval system, or transmitted in any form or by any means, electronic, mechanical, photocopying, recording, or otherwise, without the prior written permission of Seiko Epson Corporation. No patent liability is assumed with respect to the use of the information contained herein. Neither is any liability assumed for damages resulting from the use of the information herein. The information contained herein is designed only for use with this Epson product. Epson is not responsible for any use of this information as applied to other products.

Neither Seiko Epson Corporation nor its affiliates shall be liable to the purchaser of this product or third parties for damages, losses, costs, or expenses incurred by the purchaser or third parties as a result of accident, misuse, or abuse of this product or unauthorized modifications, repairs, or alterations to this product, or (excluding the U.S.) failure to strictly comply with Seiko Epson Corporation's operating and maintenance instructions.

Seiko Epson Corporation and its affiliates shall not be liable for any damages or problems arising from the use of any options or any consumable products other than those designated as Original Epson Products or Epson Approved Products by Seiko Epson Corporation.

Seiko Epson Corporation shall not be held liable for any damage resulting from electromagnetic interference that occurs from the use of any interface cables other than those designated as Epson Approved Products by Seiko Epson Corporation.

© 2020 Seiko Epson Corporation

The contents of this manual and the specifications of this product are subject to change without notice.

Important Instructions

Safety Instructions. 13

Printer Advisories and Warnings. 14

Protecting Your Personal Information. 16

Safety Instructions

Read and follow these instructions to ensure safe use of this printer. Make sure you keep this manual for future reference. Also, be sure to follow all warnings and instructions marked on the printer.

- ❏ Some of the symbols used on your printer are to ensure safety and proper use of the printer. Visit the following Web site to learn the meaning of the symbols.

  http://support.epson.net/symbols

- ❏ Use only the power cord supplied with the printer and do not use the cord with any other equipment. Use of other cords with this printer or the use of the supplied power cord with other equipment may result in fire or electric shock.
- ❏ Be sure your AC power cord meets the relevant local safety standard.
- ❏ Never disassemble, modify, or attempt to repair the power cord, plug, printer unit, scanner unit, or options by yourself, except as specifically explained in the printer's manuals.
- ❏ Unplug the printer and refer servicing to qualified service personnel under the following conditions:

  The power cord or plug is damaged; liquid has entered the printer; the printer has been dropped or the casing damaged; the printer does not operate normally or exhibits a distinct change in performance. Do not adjust controls that are not covered by the operating instructions.

- ❏ Place the printer near a wall outlet where the plug can be easily unplugged.
- ❏ Do not place or store the printer outdoors, near excessive dirt or dust, water, heat sources, or in locations subject to shocks, vibrations, high temperature or humidity.
- ❏ Take care not to spill liquid on the printer and not to handle the printer with wet hands.
- ❏ Keep the printer at least 22 cm away from cardiac pacemakers. Radio waves from this printer may adversely affect the operation of cardiac pacemakers.
- ❏ If the LCD screen is damaged, contact your dealer. If the liquid crystal solution gets on your hands, wash them thoroughly with soap and water. If the liquid crystal solution gets into your eyes, flush them immediately with water. If discomfort or vision problems remain after a thorough flushing, see a doctor immediately.
- ❏ Avoid using a telephone during an electrical storm. There may be a remote risk of electric shock from lightning.
- ❏ Do not use a telephone to report a gas leak in the vicinity of the leak.
- ❏ The printer is heavy and should not be lifted or carried by less than two people. When lifting the printer, two people should assume the correct positions as shown below.

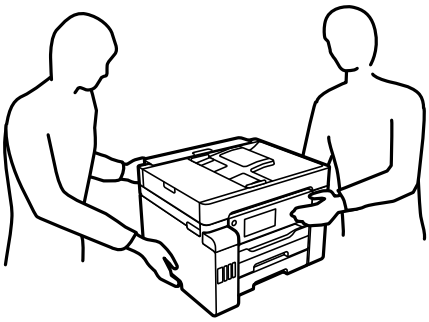

Safety Instructions for Ink

- ❏ Be careful not to touch any ink when you handle the ink tanks, ink tank caps, and opened ink bottles or ink bottle caps.
  - ❏ If ink gets on your skin, wash the area thoroughly with soap and water.
  - ❏ If ink gets into your eyes, flush them immediately with water. If discomfort or vision problems continue after a thorough flushing, see a doctor immediately.
  - ❏ If ink gets into your mouth, see a doctor right away.
- ❏ Do not disassemble the maintenance box; otherwise ink may get into your eyes or on your skin.
- ❏ Do not shake an ink bottle too vigorously or subject it to strong impacts as this can cause ink to leak.
- ❏ Keep ink bottles, the ink tank unit, and maintenance box out of the reach of children. Do not allow children to drink from or handle the ink bottles and ink bottle cap.

Printer Advisories and Warnings

Read and follow these instructions to avoid damaging the printer or your property. Make sure you keep this manual for future reference.

Advisories and Warnings for Setting Up the Printer

- ❏ Do not block or cover the vents and openings in the printer.
- ❏ Use only the type of power source indicated on the printer's label.
- ❏ Avoid using outlets on the same circuit as photocopiers or air control systems that regularly switch on and off.
- ❏ Avoid electrical outlets controlled by wall switches or automatic timers.
- ❏ Keep the entire computer system away from potential sources of electromagnetic interference, such as loudspeakers or the base units of cordless telephones.
- ❏ The power-supply cords should be placed to avoid abrasions, cuts, fraying, crimping, and kinking. Do not place objects on top of the power-supply cords and do not allow the power-supply cords to be stepped on or run over. Be particularly careful to keep all the power-supply cords straight at the ends and the points where they enter and leave the transformer.
- ❏ If you use an extension cord with the printer, make sure that the total ampere rating of the devices plugged into the extension cord does not exceed the cord's ampere rating. Also, make sure that the total ampere rating of all devices plugged into the wall outlet does not exceed the wall outlet's ampere rating.
- ❏ If you plan to use the printer in Germany, the building installation must be protected by a 10 or 16 amp circuit breaker to provide adequate short-circuit protection and over-current protection for the printer.
- ❏ When connecting the printer to a computer or other device with a cable, ensure the correct orientation of the connectors. Each connector has only one correct orientation. Inserting a connector in the wrong orientation may damage both devices connected by the cable.
- ❏ Place the printer on a flat, stable surface that extends beyond the base of the printer in all directions. The printer will not operate properly if it is tilted at an angle.
- ❏ Allow space above the printer so that you can fully raise the document cover.
- ❏ Leave enough space in front of the printer for the paper to be fully ejected.

- ❏ Avoid places subject to rapid changes in temperature and humidity. Also, keep the printer away from direct sunlight, strong light, or heat sources.

Advisories and Warnings for Using the Printer

- ❏ Do not insert objects through the slots in the printer.
- ❏ Do not put your hand inside the printer during printing.
- ❏ Do not touch the white flat cable and ink tubes inside the printer.
- ❏ Do not use aerosol products that contain flammable gases inside or around the printer. Doing so may cause fire.
- ❏ Do not move the print head by hand if not instructed to do so; otherwise, you may damage the printer.
- ❏ Be careful not to trap your fingers when closing the scanner unit.
- ❏ Do not press too hard on the scanner glass when placing the originals.
- ❏ Always turn the printer off using the ⏻ button. Do not unplug the printer or turn off the power at the outlet until the ⏻ light stops flashing.
- ❏ If you are not going to use the printer for a long period, be sure to unplug the power cord from the electrical outlet.

Advisories and Warnings for Using the Touchscreen

- ❏ The LCD screen may contain a few small bright or dark spots, and because of its features it may have an uneven brightness. These are normal and do not indicate that it is damaged in any way.
- ❏ Only use a dry, soft cloth for cleaning. Do not use liquid or chemical cleaners.
- ❏ The exterior cover of the touchscreen could break if it receives a heavy impact. Contact your dealer if the panel surface chips or cracks, and do not touch or attempt to remove the broken pieces.
- ❏ Press the touchscreen gently with your finger. Do not press force or operate with your nails.
- ❏ Do not use sharp objects such as ball point pens or sharp pencils to perform operations.
- ❏ Condensation inside the touchscreen due to abrupt changes in temperature or humidity may cause performance to deteriorate.

Advisories and Warnings for Using the Printer with a Wireless Connection

- ❏ Radio waves from this printer may negatively affect the operation of medical electronic equipment, causing them to malfunction. When using this printer inside medical facilities or near medical equipment, follow directions from the authorized personnel representing the medical facilities, and follow all posted warnings and directions on the medical equipment.
- ❏ Radio waves from this printer may negatively affect the operation of automatically controlled devices such as automatic doors or fire alarms, and could lead to accidents due to malfunction. When using this printer near automatically controlled devices, follow all posted warnings and directions on these devices.

Advisories and Warnings for Transporting or Storing the Printer

- When storing or transporting the printer, avoid tilting it, placing it vertically, or turning it upside down; otherwise ink may leak.
- Before transporting the printer, make sure that the transportation lock is set to the locked (Transport) position and that the print head is in the home (far right) position.

Protecting Your Personal Information

When you give the printer to someone else or dispose of it, erase all the personal information stored in the printer's memory by selecting the menus on the control panel as described below.

Settings > **General Settings** > **System Administration** > **Restore Default Settings** > **Clear All Data and Settings**

Settings >**General Settings** > **System Administration** > **Clear Internal Memory Data** > **Delete All Internal Memory Jobs**

Part Names and Functions

Front. 18

Inside. 20

Rear. 21

Front

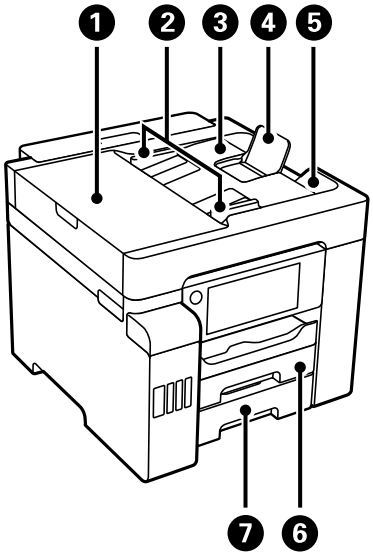

1	ADF (Automatic Document Feeder) cover	Open when removing jammed originals in the ADF.
2	ADF edge guide	Feeds originals straight into the printer. Slide to the edge of the originals.
3	ADF input tray	Feeds originals automatically.
4	ADF document support	Suppots originals larger than A4-size.
5	ADF output tray	Holds originals ejected from the ADF.
6	Paper cassette1	Loads paper.
7	Paper cassette2	

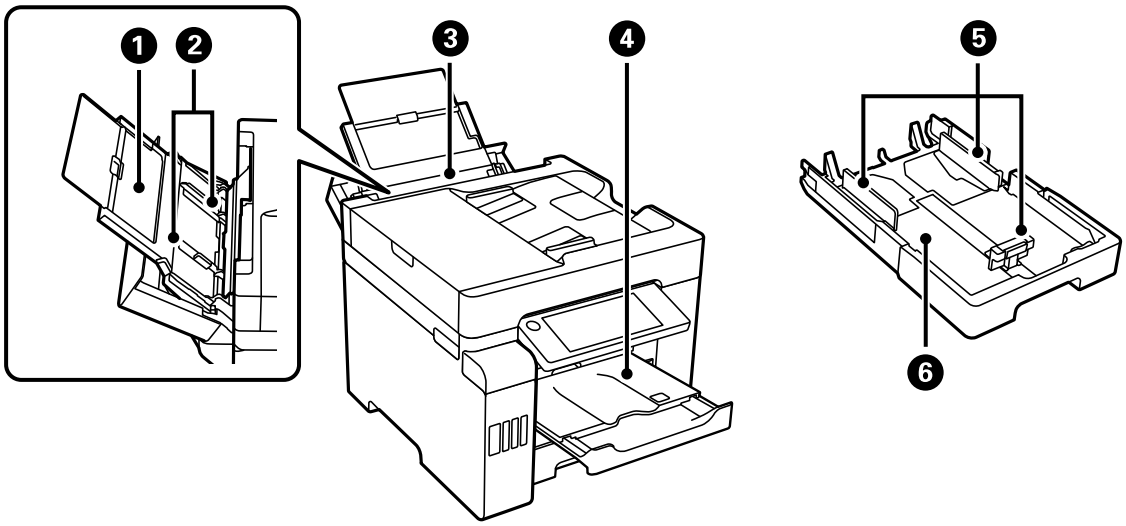

1	Paper support	Supports loaded paper.

❷	Edge guide	Feeds the paper straight into the printer. Slide to the edges of the paper.
❸	Paper tray	Loads all paper types supported by the printer.
❹	Output tray	Holds the ejected paper. When you start printing, this tray is ejected to fit the paper size automatically. To store the tray, push it manually or select on the control panel.
❺	Edge guide	Feeds the paper straight into the printer. Slide to the edges of the paper.
❻	Paper cassette	Loads paper.

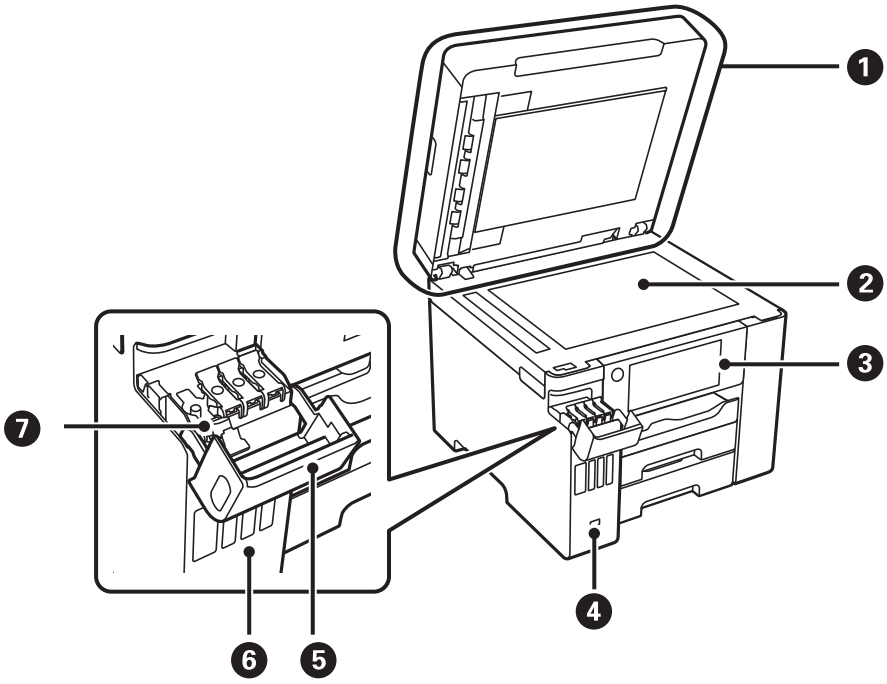

❶	Document cover	Blocks external light while scanning.
❷	Scanner glass	Place the originals. You can place the originals that are not fed from the ADF such as envelopes or thick books.
❸	Control panel	Allows you to make settings and perform operations on the printer. Also displays the printer's status.
❹	External interface USB port	Connects memory devices.
❺	Ink tank cover	Open to refill the ink tank.
❻	Ink tank	Supplies ink to the print head.
❼	Ink tank cap	Open to refill the ink tank.

Inside

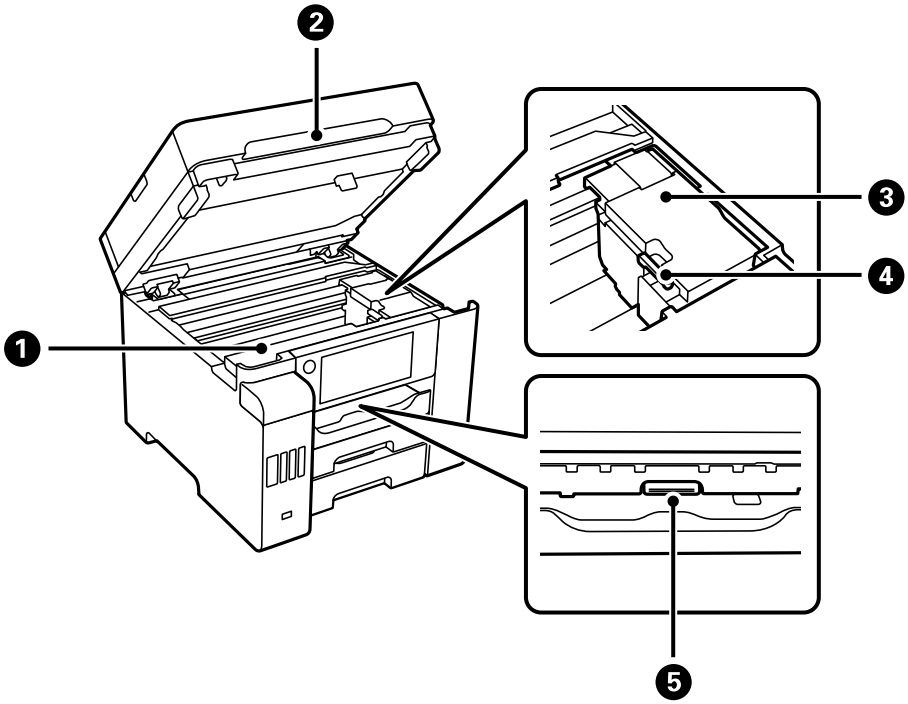

❶	Maintenance box cover	Open when replacing the maintenance box. The maintenance box is a container that collects a very small amount of surplus ink during cleaning or printing.
❷	Scanner unit	Scans placed originals. Open to remove jammed paper. This unit should usually be kept closed.
❸	Print head	Ink is ejected from the print head nozzles underneath.
❹	Transportation lock	Stops ink supply. Set to the locked (Transport) position when transporting the printer.
❺	Inner cover	Open to remove jammed paper.

Rear

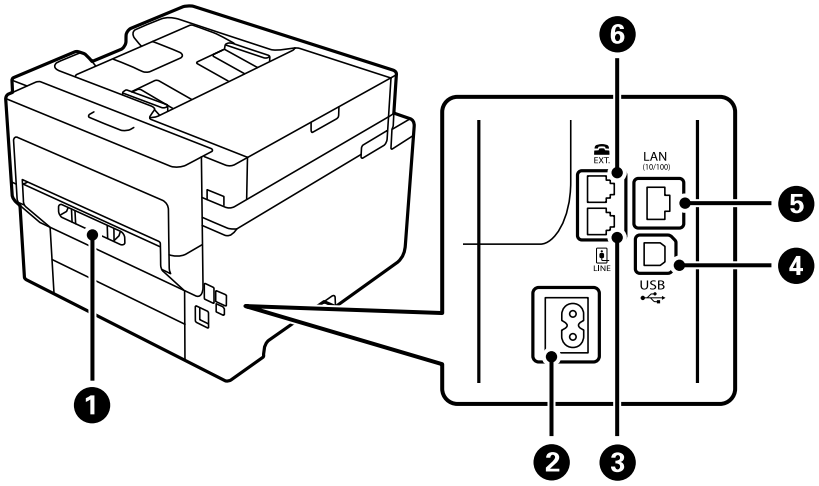

❶	Rear cover	Remove when removing jammed paper.
❷	AC inlet	Connects the power cord.
❸	LINE port	Connects a phone line.
❹	USB port	Connects a USB cable to connect with a computer.
❺	LAN port	Connects a LAN cable.
❻	EXT. port	Connects external phone devices.

Guide to the Control Panel

Control Panel. 23

Home Screen Configuration. 23

Menu Screen Configuration. 25

Job/Status Screen Configuration. 26

Entering Characters. 27

Viewing Animations. 27

Control Panel

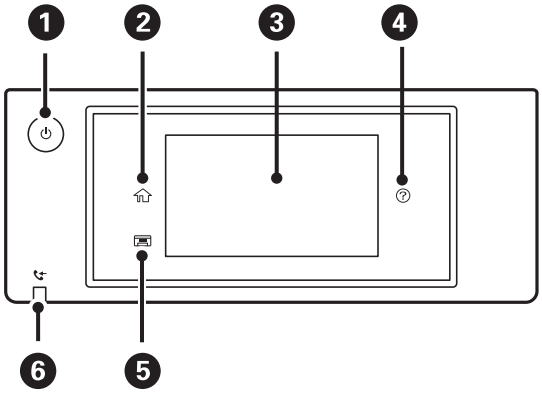

1	Turns the printer on or off. Unplug the power cord when the power light is off.
2	Displays the home screen.
3	Displays menus and messages. You can change the angle of the control panel. When no operations are performed for a specific length of time, the printer enters sleep mode and the display turns off. Tap anywhere on the touch screen to turn on the display. Depending on the current settings, pressing the power button wakes the printer from sleep mode.
4	Displays the **Help** screen. You can check solutions to problems from here.
5	Stores the output tray.
6	Turns on when received documents that have not yet been read, printed, or saved, are stored in the printer's memory.

Home Screen Configuration

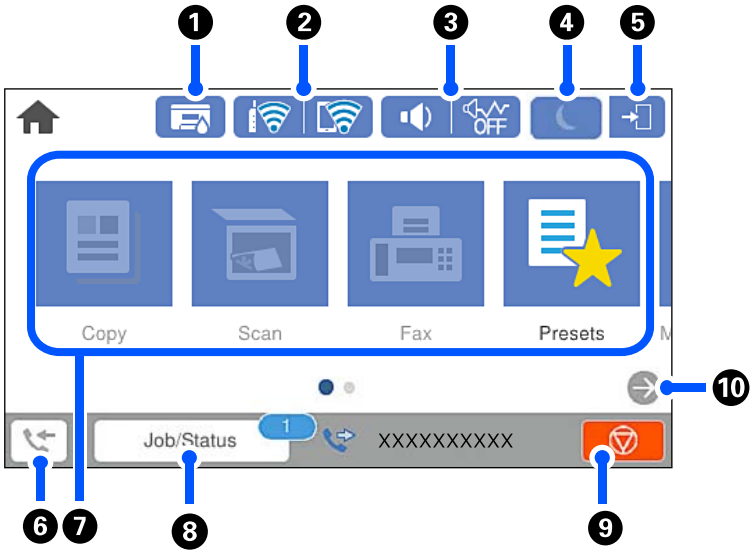

❶		Displays the **Printer Status** screen. You can check the approximate service life of the maintenance box.
❷		Displays the network connection status. See the following for more details. "Guide to the Network Icon" on page 25
❸		Displays the **Device Sound Settings** screen. You can set **Mute** and **Quiet Mode**. You can also access the **Sounds** menu from this screen. You can also make this setting from the **Settings** menu. **Settings** > **General Settings** > **Basic Settings** > **Sounds**
		Indicates whether or not **Quiet Mode** is set for the printer. When this feature is enabled, the noise made by printer operations is reduced, but print speed may slow down. However, noises may not be reduced depending on the selected paper type and print quality.
		Indicates that **Mute** is set for the printer.
❹		Select the icon to enter sleep mode. When the icon is grayed out, the printer cannot enter sleep mode.
❺		Indicates that the user restriction feature is enabled. Select this icon to log in to the printer. You need to select a user name and then enter a password. Contact your printer administrator for login information. When is displayed, a user with access permission has logged in. Select the icon to logout.
❻		Displays the **Fax Data Information** screen. The number displayed indicates the number of faxes that have not yet been read, printed, or saved.
❼	Displays each menu. ❑ Copy Allows you to copy documents. ❑ Scan Allows you to scan documents and save them to a memory device or a computer. ❑ Fax Allows you to send faxes. ❑ Presets Allows you to register frequently used settings for copying, scanning, or faxing as a preset. ❑ Memory Device Allows you to print JPEG or TIFF data on a memory device such as a USB flash device connected to the printer. ❑ Fax Box Allows you to store received documents, documents to be sent, or documents for polling faxes. ❑ Confidential Job Allows you to print a password protected job sent from the printer driver. ❑ Settings Allows you to make settings related to maintenance, printer settings, and operations.	
❽	Job/Status	Displays on-going jobs that are standing by. Tap to display the type of jobs, arrival timer, user names, and so on as a list. The number displayed indicates the number of jobs that are standing by.

❾		Stops the current operation. The shape of this icon differs slightly except when displayed on the home screen. The icon is displayed depending on the situation.
❿		Scrolls the screen to the right.

Guide to the Network Icon

	The printer is not connected to a wired (Ethernet) network or unset it.
	The printer is connected to a wired (Ethernet) network.
	The printer is not connected to a wireless (Wi-Fi) network.
	The printer is searching for SSID, unset IP address, or having a problem with a wireless (Wi-Fi) network.
	The printer is connected to a wireless (Wi-Fi) network. The number of bars indicates the signal strength of the connection. The more bars there are, the stronger the connection.
	The printer is not connected to a wireless (Wi-Fi) network in Wi-Fi Direct (Simple AP) mode.
	The printer is connected to a wireless (Wi-Fi) network in Wi-Fi Direct (Simple AP) mode.

Menu Screen Configuration

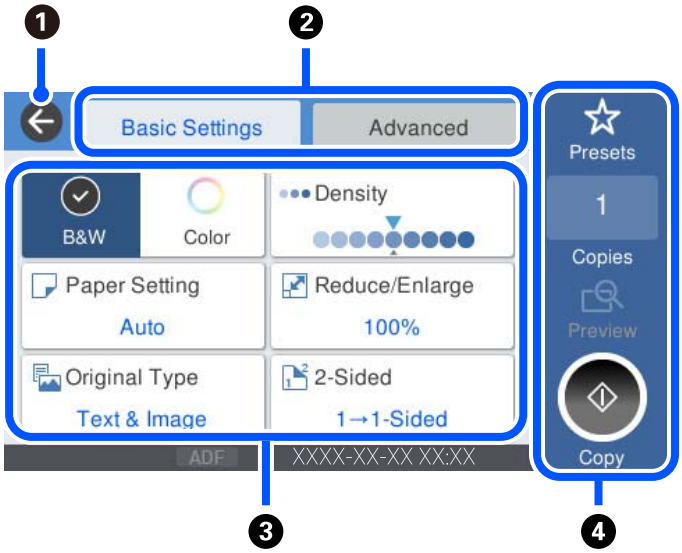

❶	Returns to the previous screen.
❷	Switches the list of settings using the tabs. The **Basic Settings** tab displays frequently used items. The **Advanced** tab displays other items that you can set as necessary.

❸	Displays the list of setting items. When is displayed, you can view additional information by selecting the icon. Make settings by selecting the item or adding a check mark. When you have changed an item from the user default or the factory default, is displayed on the item. Grayed out items are not available. Select the item to check why it is unavailable. If any problems occur, is displayed on the item. Select the icon to check how to solve the problem.	
❹	Starts operations using the current settings. Items vary depending on the menu.	
	Presets	Displays the preset list. You can register current setting as a preset, or load registered presets.
	Copies	Displays the on-screen keypad allowing you to enter the number of copies.
	Preview	Displays a preview of the image before printing, copying, scanning, or sending faxes.
	◇	Starts printing, copying, scanning, or sending faxes.

Job/Status Screen Configuration

Select Job/Status on the home screen to display the Job/Status screen.You can check the status of the printer or the jobs.

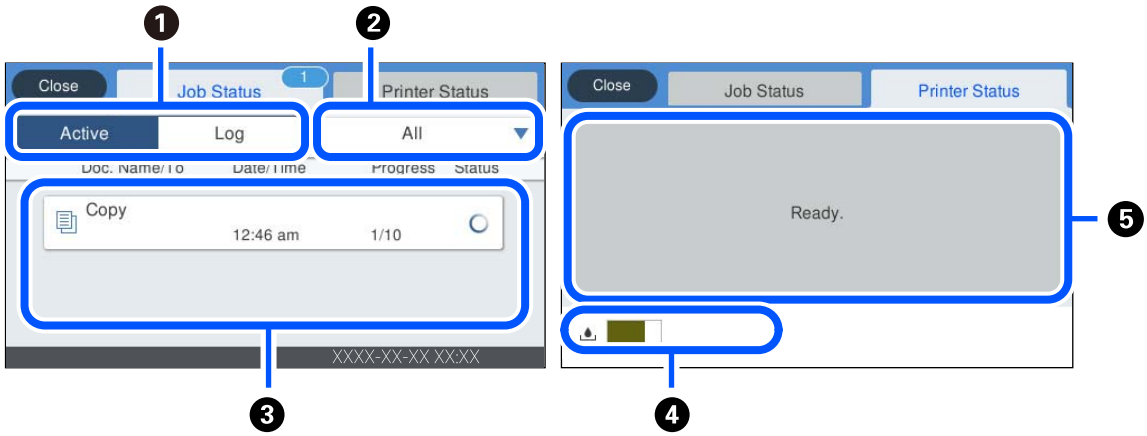

❶	Switches the displayed lists.
❷	Filter the jobs by functional.
❸	When **Active** is selected, displays the list of ongoing jobs and jobs waiting to be processed. When **Log** is selected, displays the job history. You can cancel jobs or check the error code displayed in the history when the job has failed.
❹	Indicates the approximate service life of the maintenance box.
❺	Displays any errors that have occurred in the printer. Select the error from the list to display the error message.

Related Information

➡ "Error Code is Displayed on the Status Menu" on page 217

Entering Characters

You can enter characters and symbols by using on-screen keyboard when you make network settings, and so on.

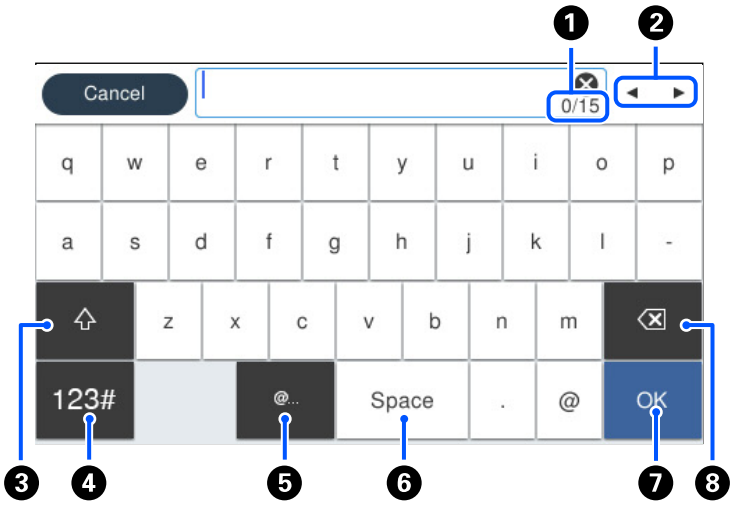

❶	Indicates the character count.
❷	Moves the cursor to the input position.
❸	Switches between upper case and lower case or numbers and symbols.
❹	Switches the character type. 123# : You can enter numbers and symbols. ABC : You can enter letters.
❺	Enters frequently used email domain addresses or URLs by simply selecting the item.
❻	Enters a space.
❼	Enters character.
❽	Deletes a character to the left.

Viewing Animations

You can view animations of operating instructions such as loading paper or removing jammed paper on the LCD screen.

❏ Select ? : Displays the help screen. Select **How To** and select the items that you want to view.

❏ Select **How To** at the bottom of the operation screen: Displays the context-sensitive animation. Note that the animation depends on the printer model.

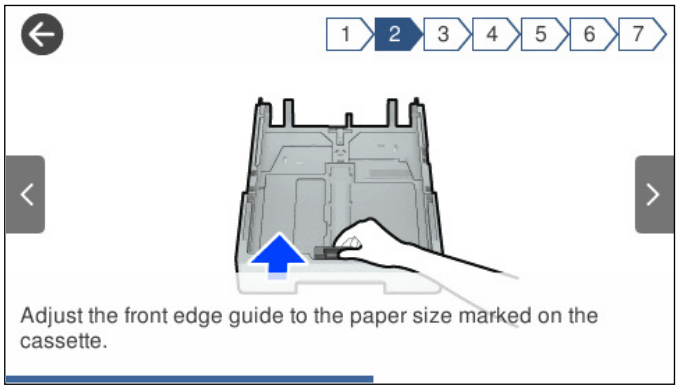

Loading Paper

Paper Handling Precautions. 30

Paper Size and Type Settings. 30

Loading Paper. 31

Paper Handling Precautions

- ❏ Read the instruction sheets supplied with the paper.
- ❏ To achieve high-quality printouts with genuine Epson paper, use the paper in the environment stated on the sheets supplied with the paper.
- ❏ Fan and align the edges of the paper before loading. Do not fan or curl photo paper. Doing so may damage the printable side.

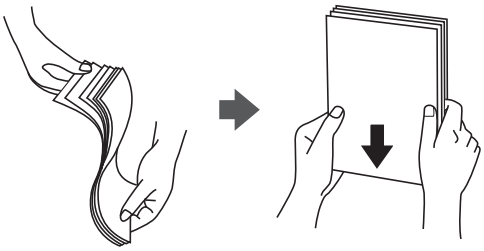

- ❏ If the paper is curled, flatten it or curl it slightly in the opposite direction before loading. Printing on curled paper may cause paper jams and smears on the printout.

- ❏ Paper feed problems may occur frequently for manual 2-sided printing when printing on one side of pre-printed paper. Reduce the number of sheets to half or less, or load one sheet of paper at a time if paper jams continue.
- ❏ Make sure you are using long-grain paper. If you are not sure what type of paper you are using, check the paper packaging or contact the manufacturer to confirm the paper specifications.
- ❏ Fan and align the edges of the envelopes before loading. When the stacked envelopes are puffed up with air, press them down to flatten them before loading.

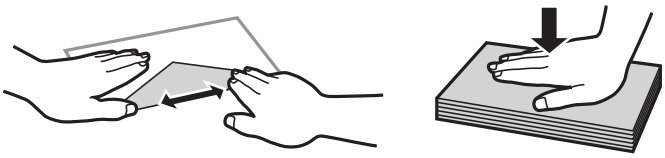

Related Information

➡ "Unavailable Paper Types" on page 292

Paper Size and Type Settings

If you register the paper size and type on the screen displayed when you insert the paper cassette, the printer informs you when the registered information and print settings differ. This prevents you from wasting paper and

ink by making sure you are not printing on the wrong paper size or printing in the wrong color due to using settings that do not match the paper type.

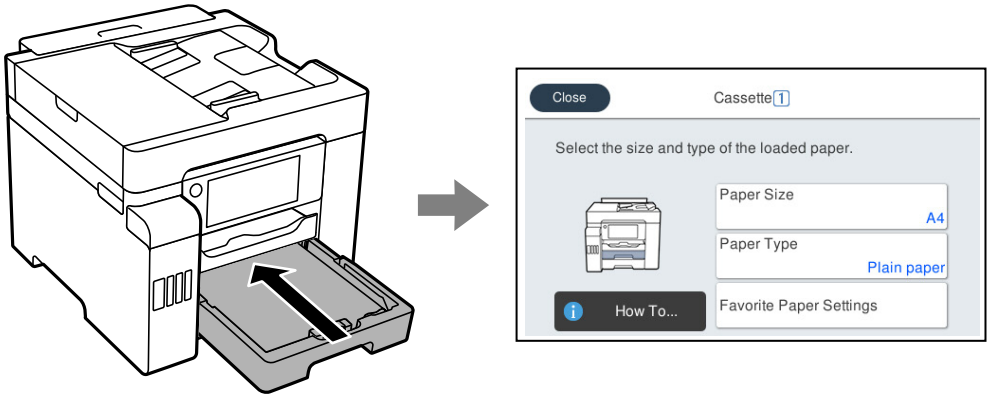

If displayed paper size and type differ from the loaded paper, select the item to change. If the settings match the loaded paper, close the screen.

Note:
You can also display the paper size and paper type settings screen by selecting ***Settings*** > ***General Settings*** > ***Printer Settings*** > ***Paper Source Settings*** > ***Paper Setting****.*

List of Paper Type

To obtain optimum printing results, select the paper type that suits the paper.

Media Name	Media Type	
	Control Panel	**Printer Driver**
Epson Business Paper Epson Bright White Ink Jet Paper Epson Bright White Paper	Plain paper	Plain paper
Epson Ultra Glossy Photo Paper	Ultra Glossy	Epson Ultra Glossy
Epson Premium Glossy Photo Paper	Prem. Glossy	Epson Premium Glossy
Epson Premium Semigloss Photo Paper	Prem. Semigloss	Epson Premium Semigloss
Epson Photo Paper Glossy	Glossy	Photo Paper Glossy
Epson Matte Paper-Heavyweight	Matte	Epson Matte
Epson Photo Quality Ink Jet Paper Epson Double-sided Photo Quality Ink Jet Paper	Photo Quality Ink Jet	Epson Photo Quality Ink Jet

Loading Paper

You can load paper or envelopes by referring to the animations displayed on the printer's LCD screen.

Select ⓘ, and then select **How To** > **Load paper**. Select the paper type and paper source you want to use to display the animations. Select **Finish** to close the animation screen.

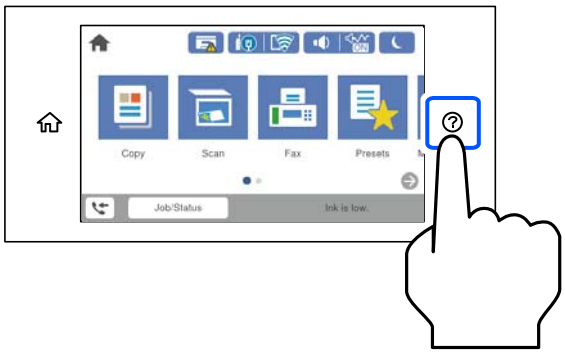

Loading Pre-punched Paper

Load a single sheet of pre-punched paper in the paper tray.

Paper size: A4, B5, A5, A6, Letter, Legal

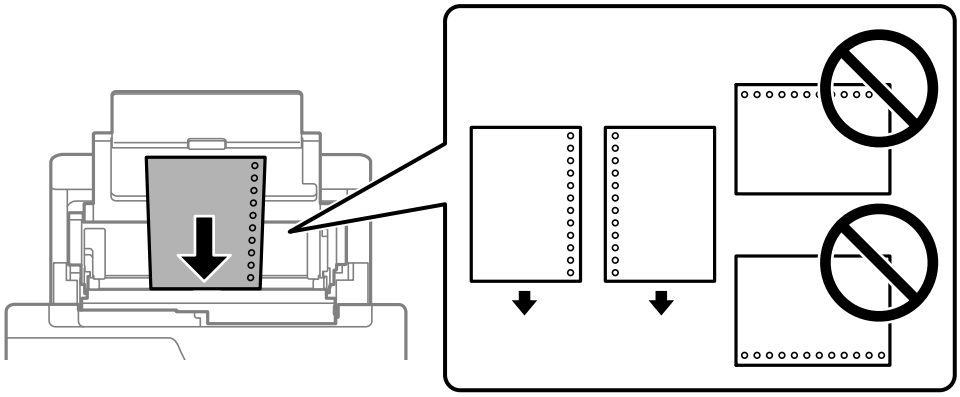

❏ Adjust the print position of your file to avoid printing over the holes.

❏ Automatic 2-sided printing is not available for pre-punched paper.

Loading Long Papers

❏ Paper tray

Load long paper in the paper tray by allowing the leading edge of the paper to roll over. Select **User-Defined** as the paper size setting.

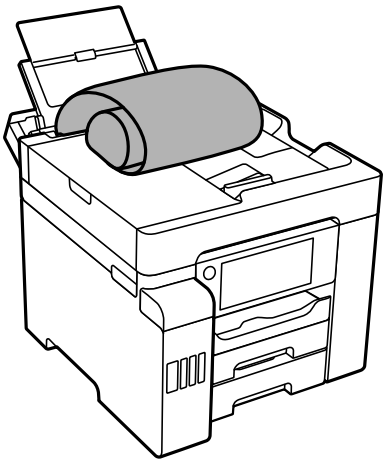

❏ Make sure the end of the paper is cut perpendicularly. A diagonal cut may cause paper feed problems.

❏ Long paper cannot be held in the output tray. Prepare a box and so on to make sure that paper does not fall on the floor.

❏ Do not touch paper that is being fed or ejected. It could injure your hand or cause print quality to decline.

❏ Paper cassette

Extend the paper cassette to load long paper. Select **User-Defined** as the paper size setting.

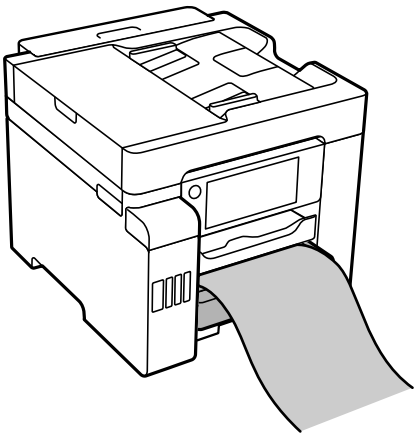

❏ Make sure the end of the paper is cut perpendicularly. A diagonal cut may cause paper feed problems.

❏ Do not touch paper that is being fed or ejected. It could injure your hand or cause print quality to decline.

Placing Originals

Placing Originals. 35

Originals that are not Supported by the ADF. 36

Placing Originals

Place originals on the scanner glass or the ADF.

You can scan multiple originals and both sides of the originals at the same time with the ADF.

Follow the steps below to view the video for placing originals.

Select ⓘ, and then select **How To** > **Place Originals**. Select the method of placing originals that you want to view. Select **Finish** to close the animation screen.

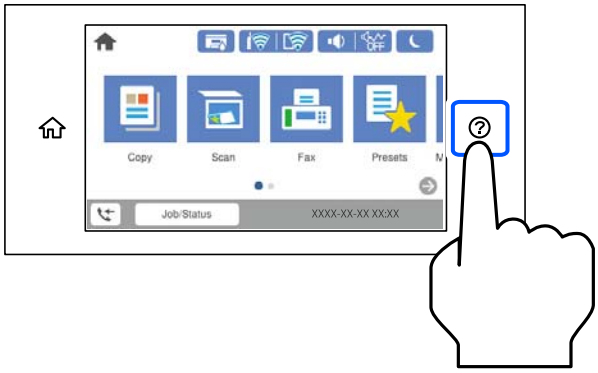

When using the scanner glass

> ⚠ ***Caution:***
>
> *Be careful not to trap your fingers when closing the document cover. Otherwise you may be injured.*

> **Important:**
>
> ❏ *When placing bulky originals such as books, prevent exterior light from shining directly onto the scanner glass.*
>
> ❏ *Do not apply too much force to the scanner glass or the document cover. Otherwise, they may be damaged.*

Note:

❏ *If there is any trash or dirt on the scanner glass, the scanning range may expand to include it, so the image of the original may be displaced or reduced. Remove any trash and dirt on the scanner glass before scanning.*

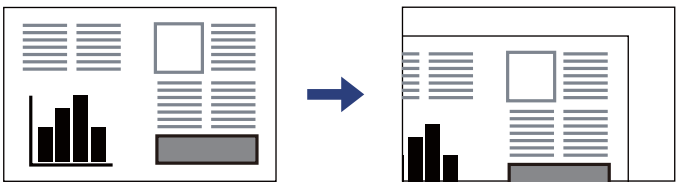

❏ *A range of 1.5 mm from the corner of the scanner glass is not scanned.*

❏ *When originals are placed in the ADF and on the scanner glass, priority is given to the originals in the ADF.*

❏ *If you leave the originals on the scanner glass for a long time, they may stick to the surface of the glass.*

When using the ADF

Important:

❏ *Do not load originals above the line just under the triangle symbol inside the ADF edge guide.*

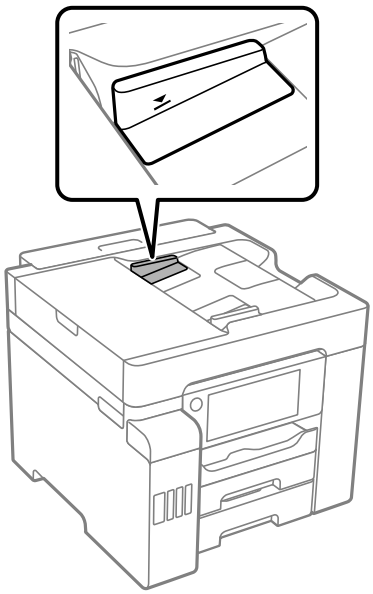

❏ *Do not add originals while scanning.*

Related Information

➡ "Originals that are not Supported by the ADF" on page 36
➡ "Scanner Specifications" on page 326
➡ "ADF Specifications" on page 327

Originals that are not Supported by the ADF

Important:

Do not feed photographs or valuable original artwork into the ADF. Misfeeding may wrinkle or damage the original. Scan these documents on the scanner glass instead.

To prevent paper jams, avoid placing the following originals in the ADF. For these types, use the scanner glass.

❏ Originals that are torn, folded, wrinkled, deteriorated, or curled

❏ Originals with binder holes

❏ Originals held together with tape, staples, paper clips etc.

❏ Originals that have stickers or labels stuck to them

❏ Originals that are cut irregularly or not right angled

❏ Originals that are bound

❏ OHPs, thermal transfer paper, or carbon backs

Inserting and Removing a Memory Device

Inserting an External USB Device. 38

Removing an External USB Device. 38

Sharing Data on a Memory Device. 39

Inserting an External USB Device

Insert an external USB device into the external interface USB port.

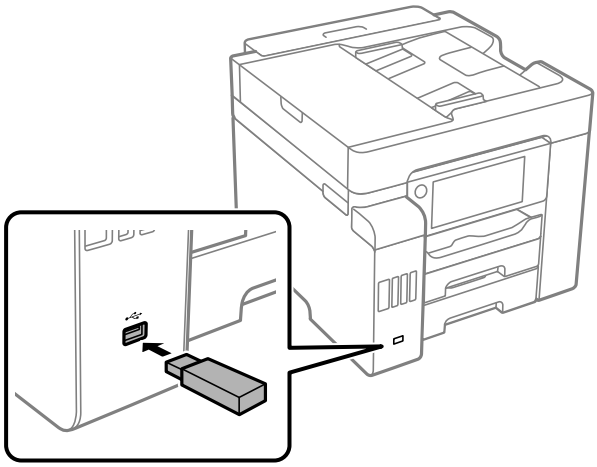

Related Information

➡ "Memory Device Specifications" on page 333

Removing an External USB Device

Remove the external USB device.

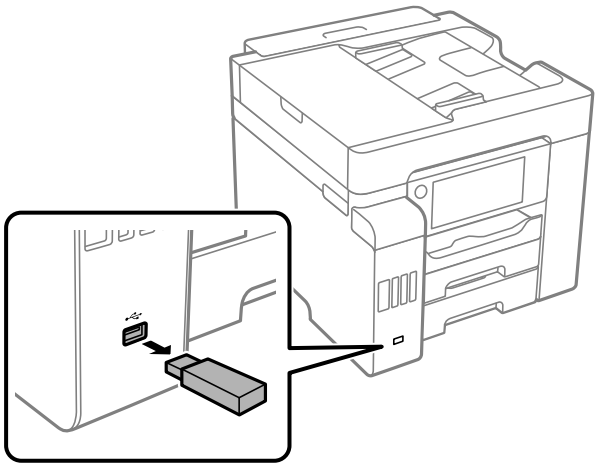

Important:

If you remove the external USB device while operating the printer, the data on the external USB device may be lost.

Sharing Data on a Memory Device

From a computer, you can write or read data on a memory device such as a USB flash drive that has been connected to the printer.

Important:
When sharing a memory device inserted in the printer between computers connected by USB or over a network, write access is only allowed to the computers that are connected by the method you selected on the printer. To write to the memory device, enter ***Settings*** *>* ***General Settings*** *>* ***Printer Settings*** *>* ***Memory Device Interface*** *>* ***File Sharing*** *on the control panel and then select a connection method.*

Note:
It takes a while to recognize data from a computer if a large memory device, such as 2 TB HDD, is connected.

Windows

Select a memory device from **Computer** or **My Computer**. The data on the memory device is displayed.

Note:
If you connected the printer to the network without using the software disc or Web Installer, map an external interface USB port as a network drive. Open ***Run*** *and enter a printer name \\XXXXX or a printer's IP address \\XXX.XXX.XXX.XXX to* ***Open:****. Right-click a device icon displayed to assign the network. The network drive appears in* ***Computer*** *or* ***My Computer****.*

Mac OS

Select a corresponding device icon. The data on the external storage device is displayed.

Note:
- *To remove a memory device, drag and drop the device icon to the trash icon. Otherwise, data on the shared drive may not be displayed correctly when another memory device is inserted.*
- *To access a memory device through the network, select* ***Go*** *>* ***Connect to Server*** *from the menu on the desktop. Enter a printer name cifs://XXXXX or smb://XXXXX (Where "XXXXX" is the printer name) in the* ***Server Address****, and then click* ***Connect****.*

Related Information

➡ "Memory Device Specifications" on page 333

Printing

Printing Documents. 41

Printing on Envelopes. 75

Printing Photos. 76

Printing Web Pages. 78

Printing Using a Cloud Service. 79

Printing Documents

Printing from a Computer - Windows

If you cannot change some of the printer driver settings, they may have been restricted by the administrator. Contact your printer administrator for assistance.

Printing Using Easy Settings

Note:
Operations may differ depending on the application. See the application's help for details.

1. Load paper in the printer.

   "Loading Paper" on page 31

2. Open the file you want to print.

3. Select **Print** or **Print Setup** from the **File** menu.

4. Select your printer.

5. Select **Preferences** or **Properties** to access the printer driver window.

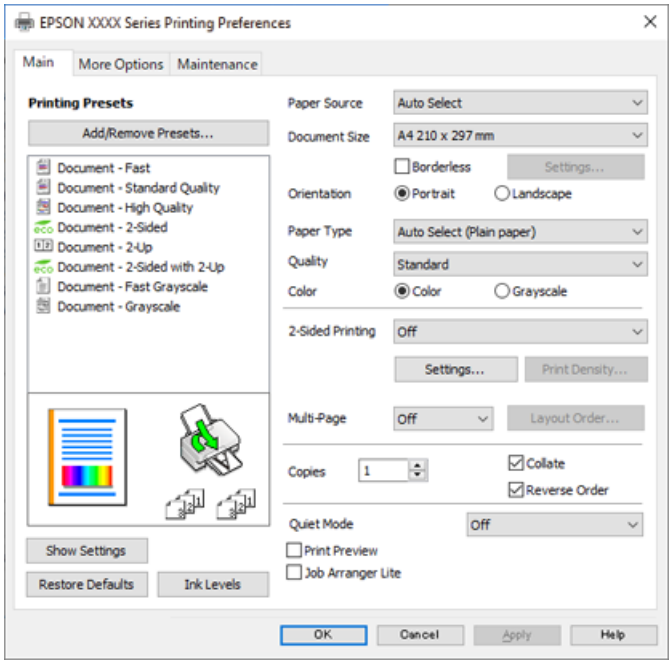

6. Change the settings as necessary.

   See the menu options for the printer driver for details.

   Note:
   - ❏ *You can also see the online help for explanations of the setting items. Right-clicking an item displays* ***Help****.*
   - ❏ *When you select* ***Print Preview****, you can see a preview of your document before printing.*

7. Click **OK** to close the printer driver window.

8. Click **Print**.

   Note:
   - ❏ *When you select* ***Print Preview****, a preview window is displayed. To change the settings, click* ***Cancel****, and then repeat the procedure from step 2.*
   - ❏ *If you want to cancel printing, on your computer right-click on your printer in* ***Devices and Printers****,* ***Printer****, or in* ***Printers and Faxes****. Click* ***See what's printing****, right-click on the job you want to cancel, and then select* ***Cancel****. However, you cannot cancel a print job from the computer once it has been completely sent to the printer. In this case, cancel the print job by using the printer's control panel.*

Related Information

➡ "Available Paper and Capacities" on page 287
➡ "List of Paper Type" on page 31
➡ "Menu Options for the Printer Driver" on page 42

Menu Options for the Printer Driver

Open the print window in an application, select the printer, and then access the printer driver window.

Note:
Menus vary depending on the option you selected.

Main Tab

Printing Presets:

Add/Remove Presets:

You can add or remove your own presets for frequently used print settings. Select the preset you want to use from the list.

Paper Source:

Select the paper source from which the paper is fed. Select **Auto Select** to automatically select the paper source selected in the print settings on the printer.

Document Size:

Select the paper size on which you want to print. If you select **User-Defined**, enter the paper width and height.

Borderless:

Enlarges the print data slightly more than the paper size so that no margins are printed around the edges of the paper. Click **Settings** to select the amount of enlargement.

Orientation:

Select the orientation you want to use to print.

Paper Type:

Select the type of paper on which you print.

Quality:

Select the pint quality you want to use for printing. Available settings depend on the paper type you select. Selecting **High** provides higher quality printing, but the printing speed may be slower.

Color:

Select whether to print in color or in monochrome.

2-Sided Printing:

Allows you to perform 2-sided printing.

Settings:

You can specify the binding edge and the binding margins. When printing multi-page documents, you can select to print starting from either the front or the back side of the page.

Print Density:

Select the document type to adjust the print density. If the appropriate print density is selected, you can prevent images from bleeding through to the reverse side. Select **User Defined** to adjust the print density manually.

Multi-Page:

Allows you to print several pages on one sheet or perform poster printing. Click **Layout Order** to specify the order in which pages are printed.

Copies:

Set the number of copies you want to print.

Collate:

Prints multi-page documents collated in order and sorted into sets.

Reverse Order:

Allows you to print from the last page so that the pages are stacked in the correct order after printing.

Quiet Mode:

Reduces the noise the printer makes. However, enabling this may reduce print speed.

Print Preview:

Displays a preview of your document before printing.

Job Arranger Lite:

Job Arranger Lite allows you to combine several files created by different applications and print them as a single print job.

Show Settings/Hide Settings:

Displays a list of items currently set on the **Main** and **More Options** tabs. You can show or hide the current setting list screen.

Restore Defaults:

Return all settings to their factory default values. The settings on the **More Options** tab are also reset to their defaults.

Ink Levels:

Displays the approximate ink level.

More Options Tab

Printing Presets:

Add/Remove Presets:

You can add or remove your own presets for frequently used print settings. Select the preset you want to use from the list.

Document Size:

Select the paper size on which you want to print.

Output Paper:

Select the paper size on which you want to print. If the **Document Size** differs from the **Output Paper**, **Reduce/Enlarge Document** is selected automatically. You do not have to select it when printing without reducing or enlarging the size of a document.

Reduce/Enlarge Document:

Allows you to reduce or enlarge the size of a document.

Fit to Page:

Automatically reduce or enlarge the document to fit to the paper size selected in **Output Paper**.

Zoom to:

Prints with a specific percentage.

Center:

Prints images in the center of the paper.

Color Correction:

Automatic:

Adjusts the tone of images automatically.

Custom:

Allows you to perform manual color correction. Clicking **Advanced** opens the **Color Correction** screen where you can select a detailed method of color correction. Click **Image Options** to enable Color Universal Print, Fix Red-Eye, and sharpen printing for thin lines.

Watermark Features:

Allows you to make settings for anti-copy patterns, watermarks, or headers and footers.

Add/Delete:

Allows you to add or remove any anti-copy patterns or watermarks that you want to use.

Settings:

Allows you to set the printing method for anti-copy patterns or watermarks.

Header/Footer:

You can print information such as a user name and printing date in headers or footers. You can then set color, font, size, or style.

Confidential Job:

Password-protect confidential documents when printing. If you use this feature, the print data is stored in the printer and can only be printed after the password has been entered using the printer's control panel. Click **Settings** to change the settings.

Additional Settings:

Rotate 180°:

Rotates pages 180 degrees before printing. Select this item when printing on paper such as envelopes that are loaded in fixed direction in the printer.

Bidirectional Printing:

Prints when the print head moves in both directions. The print speed is faster, but the quality may decline.

Mirror Image:

Inverts the image so that it prints as it would appear in a mirror.

Show Settings/Hide Settings:

Displays a list of items currently set on the **Main** and **More Options** tabs. You can show or hide the current setting list screen.

Restore Defaults:

Return all settings to their factory default values. The settings on the **Main** tab are also reset to their defaults.

Maintenance Tab

Print Head Nozzle Check:

Prints a nozzle check pattern to check if the print head nozzles are clogged.

Print Head Cleaning:

Cleans the clogged nozzles in the print head. Because this feature uses some ink, clean the print head only if some nozzles are clogged as shown in the illustration of the nozzle check pattern.

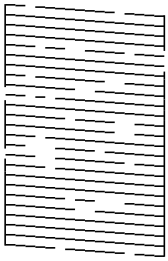

Power Cleaning:

Runs power cleaning to clean the clogged nozzles in the print head. Because this feature uses more ink than head cleaning, run power cleaning only if most nozzles are clogged as shown in the illustration of the nozzle check pattern.

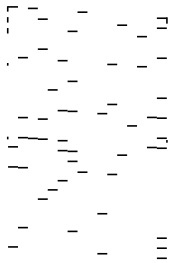

Job Arranger Lite:

Opens the Job Arranger Lite window. Here you can open and edit previously saved data.

EPSON Status Monitor 3:

Opens the EPSON Status Monitor 3 window. Here you can confirm the status of the printer and the consumables.

Monitoring Preferences:

Allows you to make settings for items on the EPSON Status Monitor 3 window.

Extended Settings:

Allows you to make a variety of settings. Right-click each item to view the Help for more details.

Print Queue:

Displays the jobs waiting to be printed. You can check, pause, or resume print jobs.

Printer and Option Information:

Displays the number of sheets of paper fed into the printer or the ADF.

Language:

Changes the language to be used on the printer driver window. To apply the settings, close the printer driver, and then open it again.

Software Update:

Starts EPSON Software Updater to check for the latest version of applications on the Internet.

Technical Support:

If the manual is installed on your computer, the manual is displayed. If it is not installed, you can connect to the Epson Web site to check the manual and available technical support.

Adding Printing Presets for Easy Printing

If you create your own preset of frequently used print settings on the printer driver, you can print easily by selecting the preset from the list.

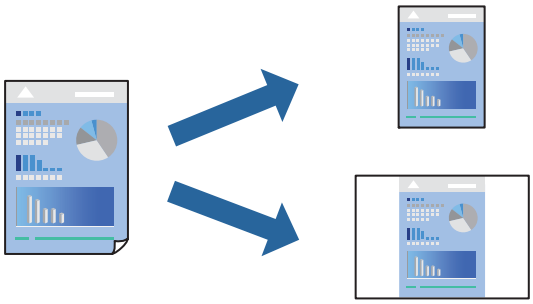

1. On the printer driver's **Main** or **More Options** tab, set each item (such as **Document Size** and **Paper Type**).
2. Click **Add/Remove Presets** in **Printing Presets**.
3. Enter a **Name** and, if necessary, enter a comment.
4. Click **Save**.

   Note:
   *To delete an added preset, click **Add/Remove Presets**, select the preset name you want to delete from the list, and then delete it.*

   "Main Tab" on page 42

   "More Options Tab" on page 44

5. Click **Print**.

The next time you want to print using the same settings, select the registered setting name from **Printing Presets**, and click **OK**.

Related Information

➡ "Loading Paper" on page 31
➡ "Printing Using Easy Settings" on page 64

Printing on 2-Sides

You can use either of the following methods to print on both sides of the paper.

❏ Automatic 2-sided printing

❏ Manual 2-sided printing

When the printer has finished printing the first side, flip the paper over to print on the other side.

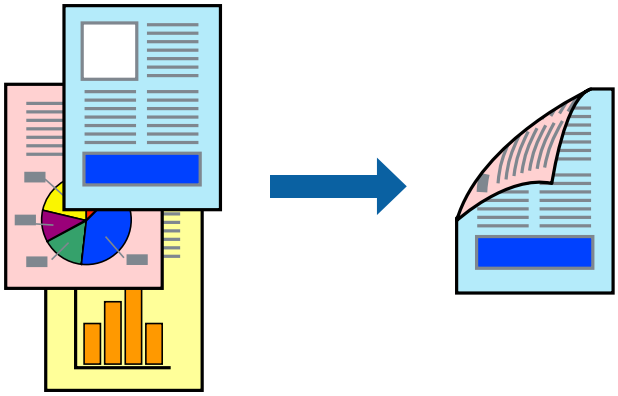

Note:

❏ *This feature is not available for borderless printing.*

❏ *If you do not use paper that is suitable for 2-sided printing, the print quality may decline and paper jams may occur.*

"Paper for 2-Sided Printing" on page 291

❏ *Depending on the paper and the data, ink may bleed through to the other side of the paper.*

❏ *You cannot perform manual 2-sided printing unless **EPSON Status Monitor 3** is enabled. If **EPSON Status Monitor 3** is disabled, access the printer driver window, click **Extended Settings** on the **Maintenance** tab, and then select **Enable EPSON Status Monitor 3**.*

❏ *However, it may not be available when the printer is accessed over a network or is used as a shared printer.*

1. On the printer driver's **Main** tab, select the method of **2-Sided Printing**.

2. Click **Settings**, make the appropriate settings, and then click **OK**.

3. Click **Print Density**, make the appropriate settings, and then click **OK**.

   When setting **Print Density**, you can adjust print density according to the document type.

   Note:

   ❏ *This setting is not available when you select manual 2-sided printing.*

   ❏ *Printing may be slow depending on the combination of options selected for **Print Density** in the **Select Document Type** window and for **Quality** on the **Main** tab.*

4. Set the other items on the **Main** and **More Options** tabs as necessary, and then click **OK**.

   "Main Tab" on page 42

   "More Options Tab" on page 44

5. Click **Print**.

   For manual 2-sided printing, when the first side has finished printing, a pop-up window is displayed on the computer. Follow the on-screen instructions.

Related Information

➡ "Available Paper and Capacities" on page 287

➡ "Loading Paper" on page 31

➡ "Printing Using Easy Settings" on page 64

Printing a Booklet

You can also print a booklet that can be created by re-ordering the pages and folding the printout.

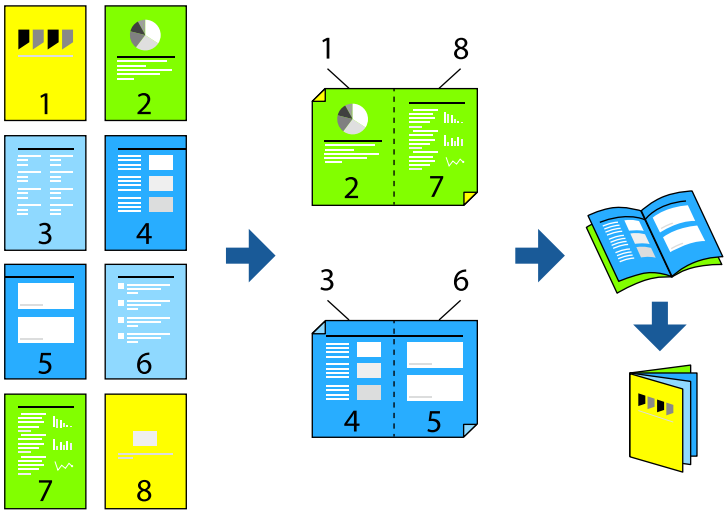

Note:

- *This feature is not available with borderless printing.*
- *If you do not use paper that is suitable for 2-sided printing, the print quality may decline and paper jams may occur.*
  "Paper for 2-Sided Printing" on page 291
- *Depending on the paper and the data, ink may bleed through to the other side of the paper.*
- *You cannot perform manual 2-sided printing unless **EPSON Status Monitor 3** is enabled. If **EPSON Status Monitor 3** is disabled, access the printer driver window, click **Extended Settings** on the **Maintenance** tab, and then select **Enable EPSON Status Monitor 3**.*
- *However, it may not be available when the printer is accessed over a network or is used as a shared printer.*

1. On the printer driver's **Main** tab, select the type of long-edge binding you want to use from **2-Sided Printing**.

2. Click **Settings**, select **Booklet**, and then select **Center Binding** or **Side Binding**.
   - Center Binding: Use this method when printing a small number of pages that can be stacked and easily folded in half.
   - Side Binding. Use this method when printing one sheet (four pages) at a time, folding each in half, and then putting them together in one volume.

3. Click **OK**.

4. When printing data that has a lot of photos and images, click **Print Density**, and then make the appropriate settings, and then click **OK**.

   When setting **Print Density**, you can adjust print density according to the document type.

   Note:
   *Printing may be slow depending on the combination of options selected for **Select Document Type** in the Print Density Adjustment window and for **Quality** on the **Main** tab.*

5. Set the other items on the **Main** and **More Options** tabs as necessary, and then click **OK**.

   "Main Tab" on page 42

   "More Options Tab" on page 44

6. Click **Print**.

Related Information

➡ "Available Paper and Capacities" on page 287
➡ "Loading Paper" on page 31
➡ "Printing Using Easy Settings" on page 64

Printing Several Pages on One Sheet

You can print several pages of data on a single sheet of paper.

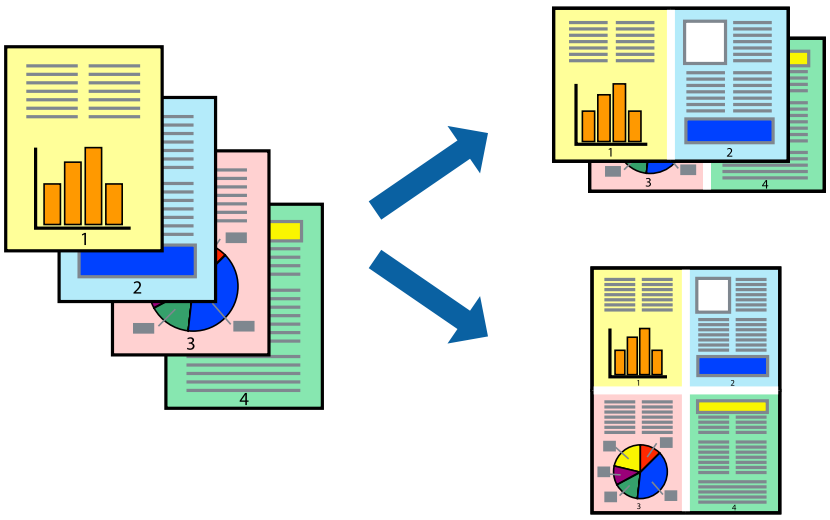

Note:
This feature is not available with borderless printing.

1. On the printer driver's **Main** tab, select **2-Up**, **4-Up**, **6-Up**, **8-Up**, **9-Up**, or **16-Up** as the **Multi-Page** setting.

2. Click **Layout Order**, make the appropriate settings, and then click **OK**.

3. Set the other items on the **Main** and **More Options** tabs as necessary, and then click **OK**.

   "Main Tab" on page 42

   "More Options Tab" on page 44

4. Click **Print**.

Related Information

➡ "Loading Paper" on page 31
➡ "Printing Using Easy Settings" on page 64

Printing to Fit the Paper Size

Select the paper size you loaded in the printer as the Destination Paper Size setting.

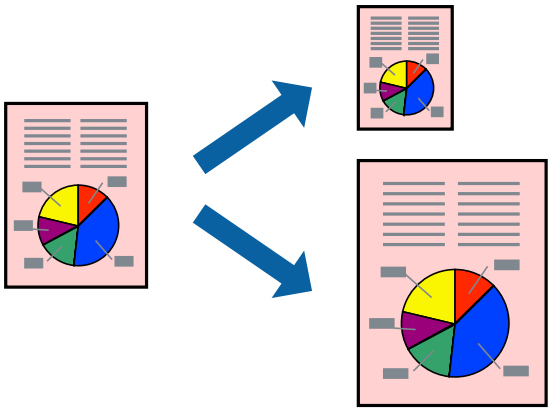

Note:
This feature is not available with borderless printing.

1. On the printer driver's **More Options** tab, make the following settings.
   - ❏ Document Size: Select the size of the paper you set in the application setting.
   - ❏ Output Paper: Select the paper size you loaded in the printer.

     Fit to Page is automatically selected.

   Note:
   *Click **Center** to print the reduced image in the middle of the paper.*

2. Set the other items on the **Main** and **More Options** tabs as necessary, and then click **OK**.

   "Main Tab" on page 42

   "More Options Tab" on page 44

3. Click **Print**.

Related Information

➡ "Loading Paper" on page 31
➡ "Printing Using Easy Settings" on page 64

Printing a Reduced or Enlarged Document at any Magnification

You can reduce or enlarge the size of a document by a specific percentage.

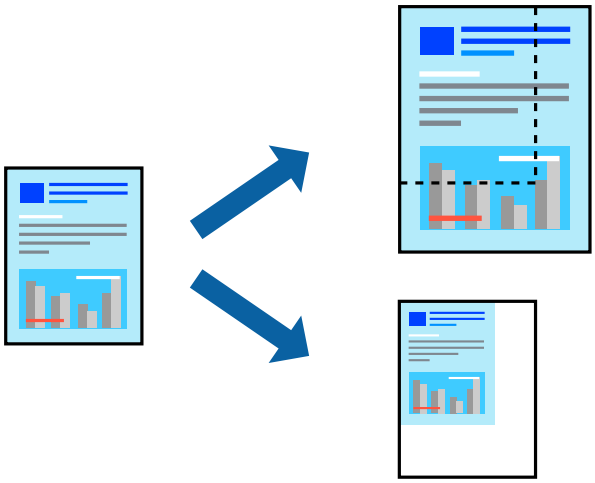

1. On the printer driver's **More Options** tab, select the document size from the **Document Size** setting.
2. Select the paper size you want to print on from the **Output Paper** setting.
3. Select **Reduce/Enlarge Document**, **Zoom to**, and then enter a percentage.
4. Set the other items on the **Main** and **More Options** tabs as necessary, and then click **OK**.

   "Main Tab" on page 42

   "More Options Tab" on page 44
5. Click **Print**.

Related Information

➡ "Loading Paper" on page 31

➡ "Printing Using Easy Settings" on page 64

Printing One Image on Multiple Sheets for Enlargement (Creating a Poster)

This feature allows you to print one image on multiple sheets of paper. You can create a larger poster by taping them together.

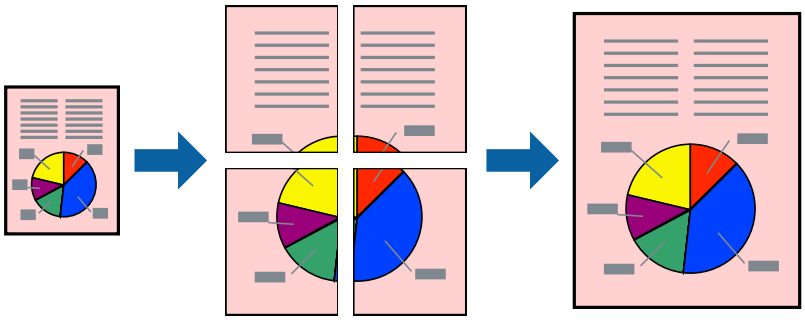

Note:
This feature is not available with borderless printing.

1. On the printer driver's **Main** tab, select **2x1 Poster**, **2x2 Poster**, **3x3 Poster**, or **4x4 Poster** as the **Multi-Page** setting.

2. Click **Settings**, make the appropriate settings, and then click **OK**.

   Note:
   Print Cutting Guides *allows you to print a cutting guide.*

3. Set the other items on the **Main** and **More Options** tabs as necessary, and then click **OK**.

   "Main Tab" on page 42

   "More Options Tab" on page 44

4. Click **Print**.

Related Information

➡ "Loading Paper" on page 31
➡ "Printing Using Easy Settings" on page 64

Making Posters Using Overlapping Alignment Marks

Here is an example of how to make a poster when **2x2 Poster** is selected, and **Overlapping Alignment Marks** is selected in **Print Cutting Guides**.

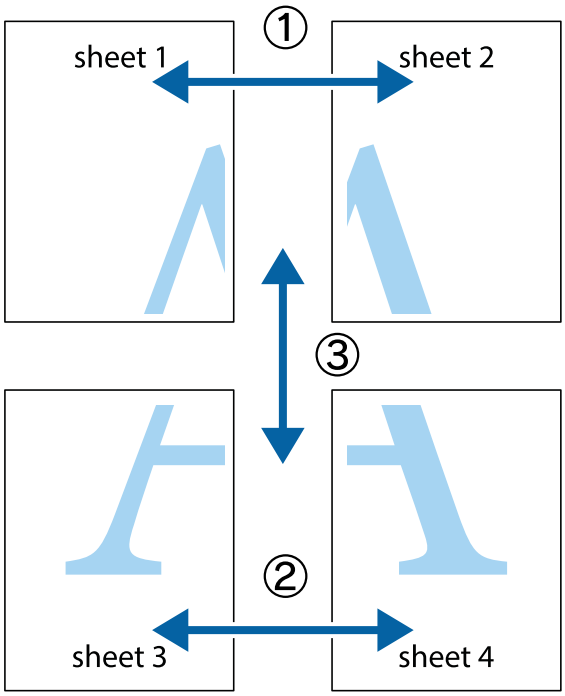

1. Prepare Sheet 1 and Sheet 2. Cut off the margins of Sheet 1 along the vertical blue line through the center of the top and bottom cross marks.

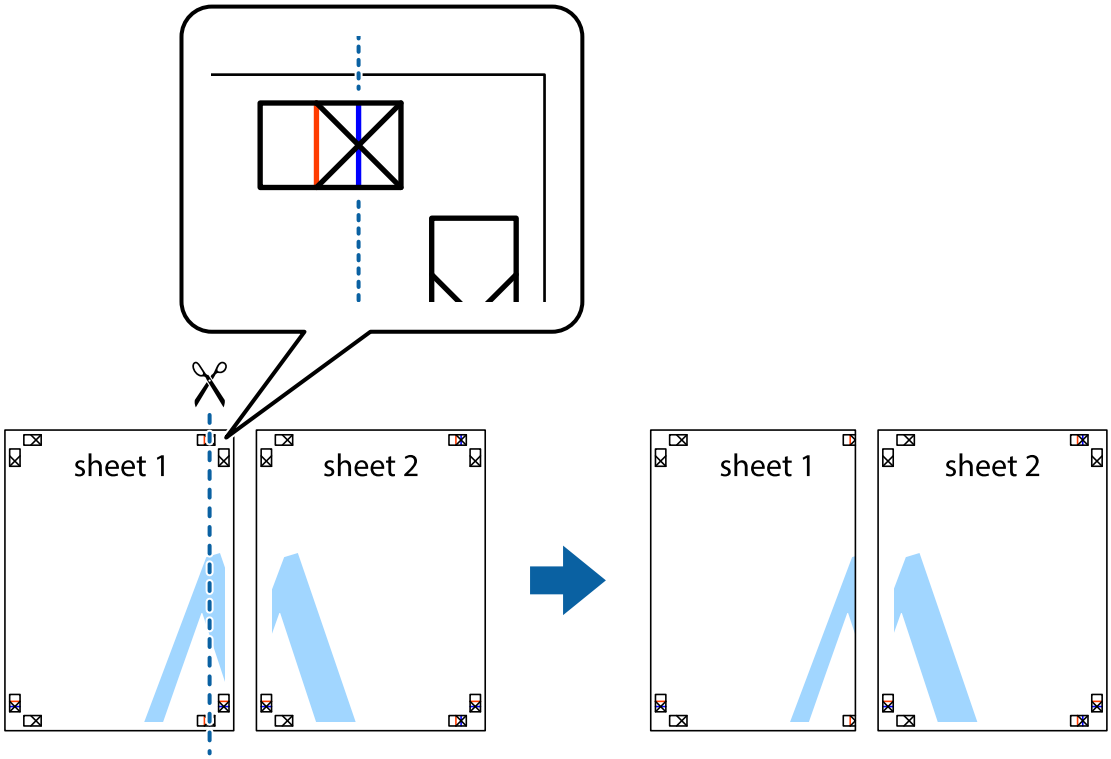

2. Place the edge of Sheet 1 on top of Sheet 2 and align the cross marks, then temporarily tape the two sheets together from the back.

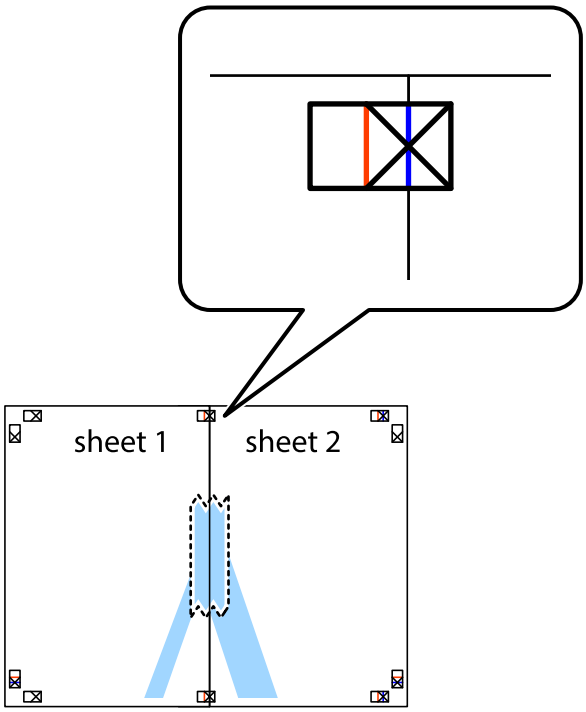

3. Cut the taped sheets in two along the vertical red line through the alignment markers (this time, the line to the left of the cross marks).

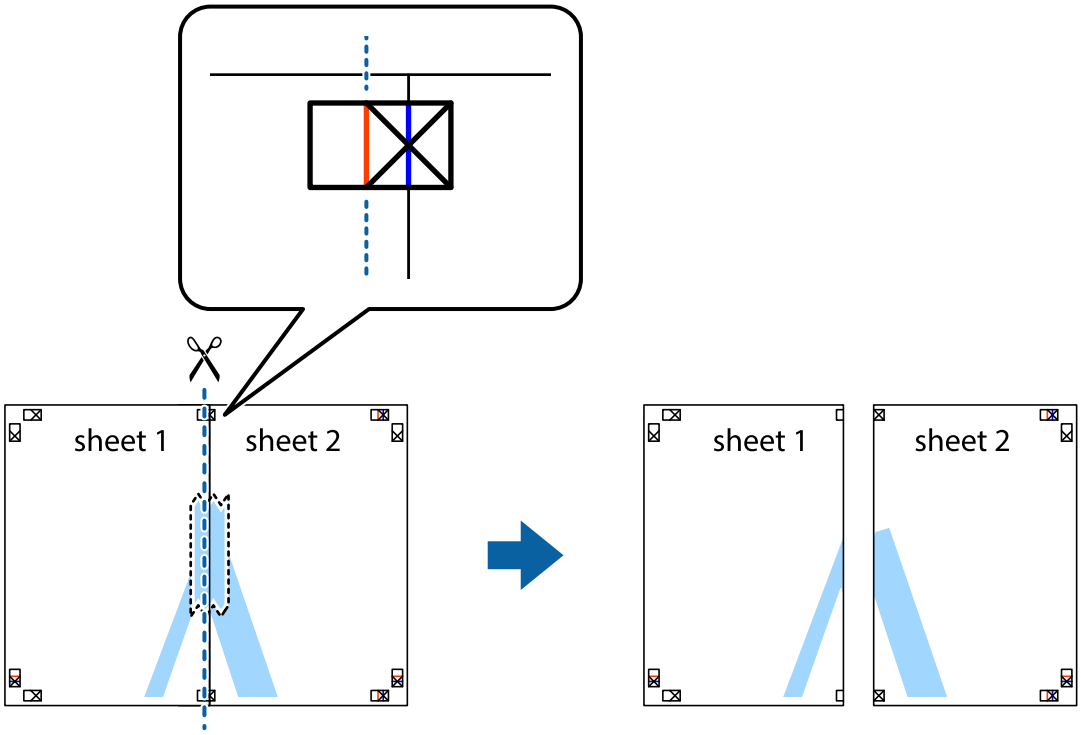

4. Tape the sheets together from the back.

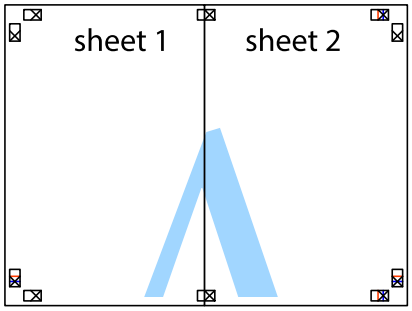

5. Repeat steps 1 to 4 to tape Sheet 3 and Sheet 4 together.

6. Cut off the margins of Sheet 1 and Sheet 2 along the horizontal blue line through the center of the left and right side cross marks.

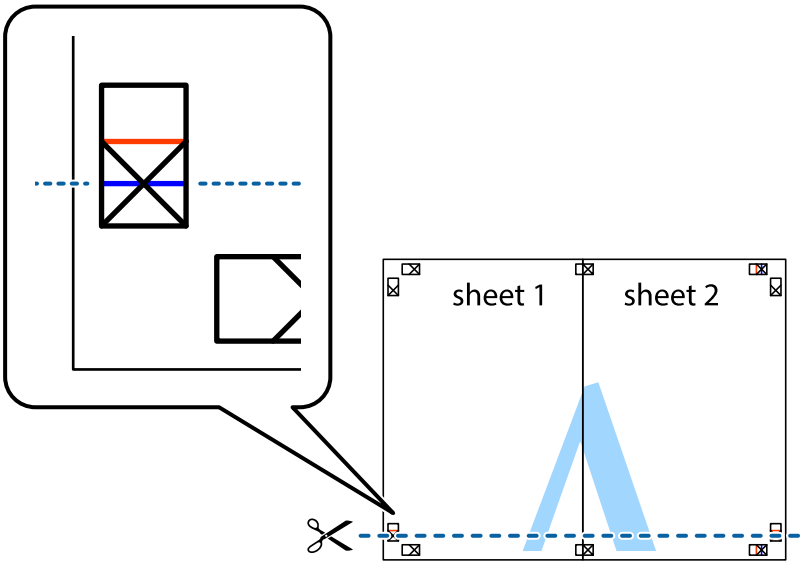

7. Place the edge of Sheet 1 and Sheet 2 on top of Sheet 3 and Sheet 4 and align the cross marks, and then temporarily tape them together from the back.

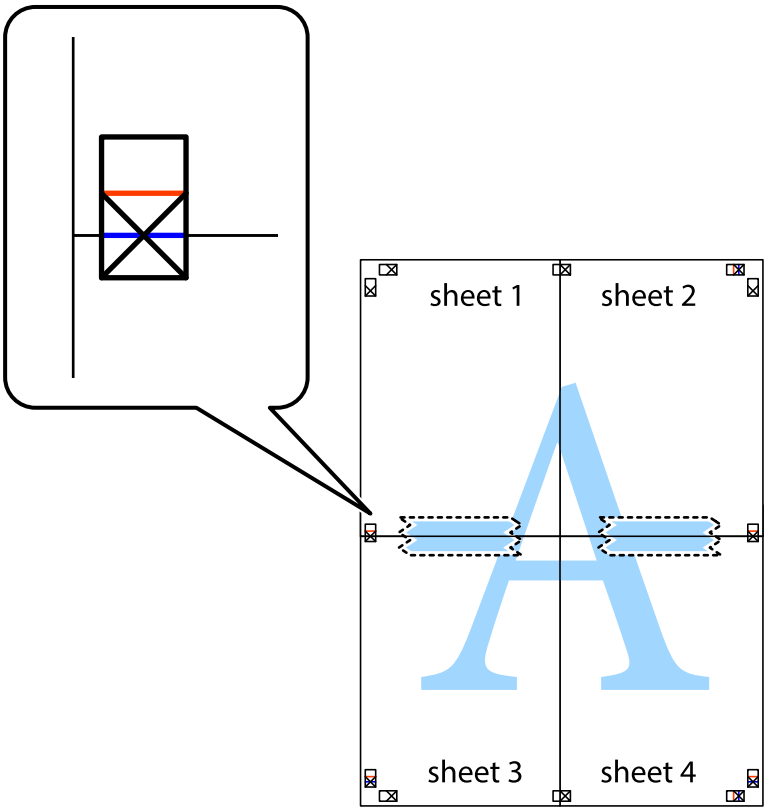

8. Cut the taped sheets in two along the horizontal red line through the alignment markers (this time, the line above the cross marks).

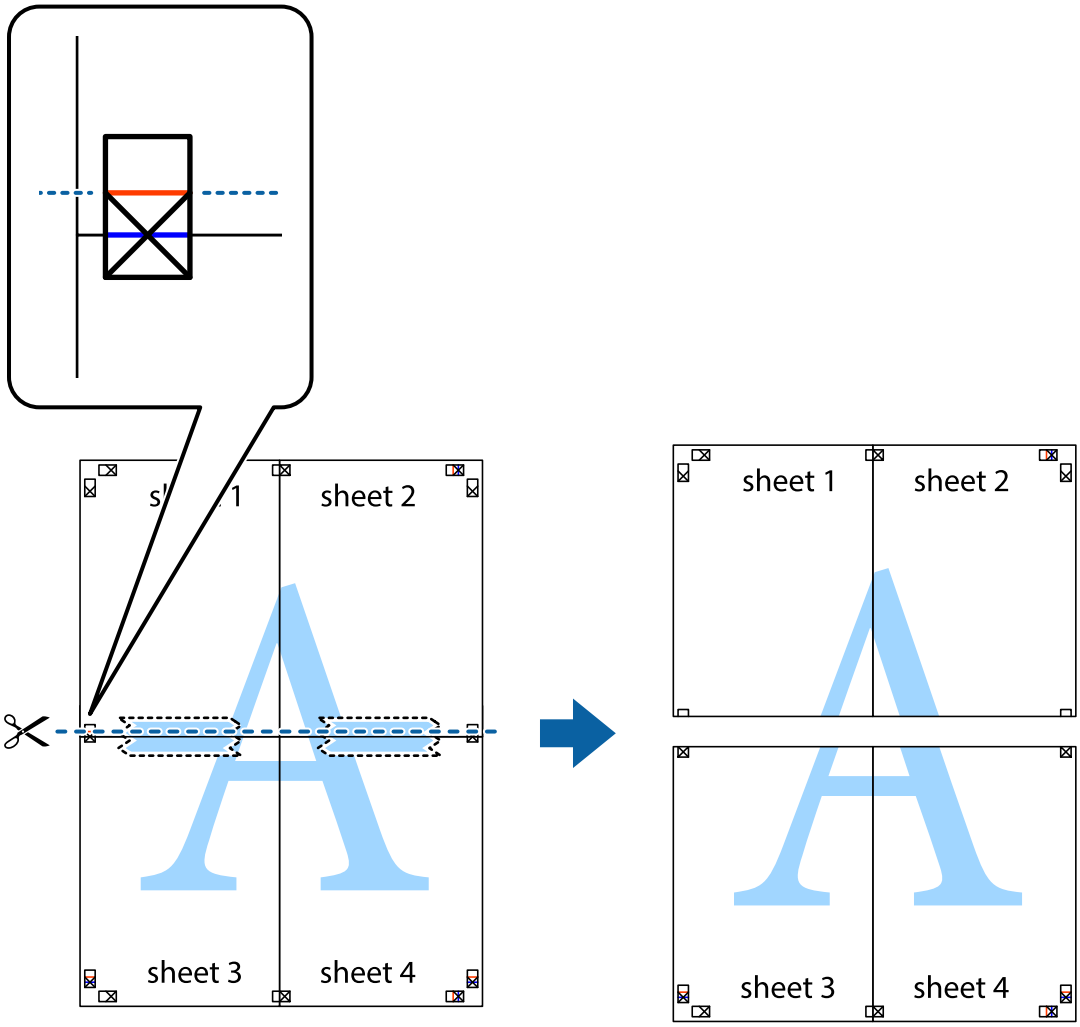

9. Tape the sheets together from the back.

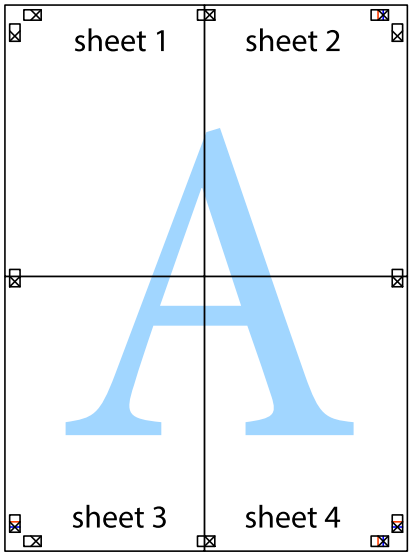

10. Cut off the remaining margins along the outer guide.

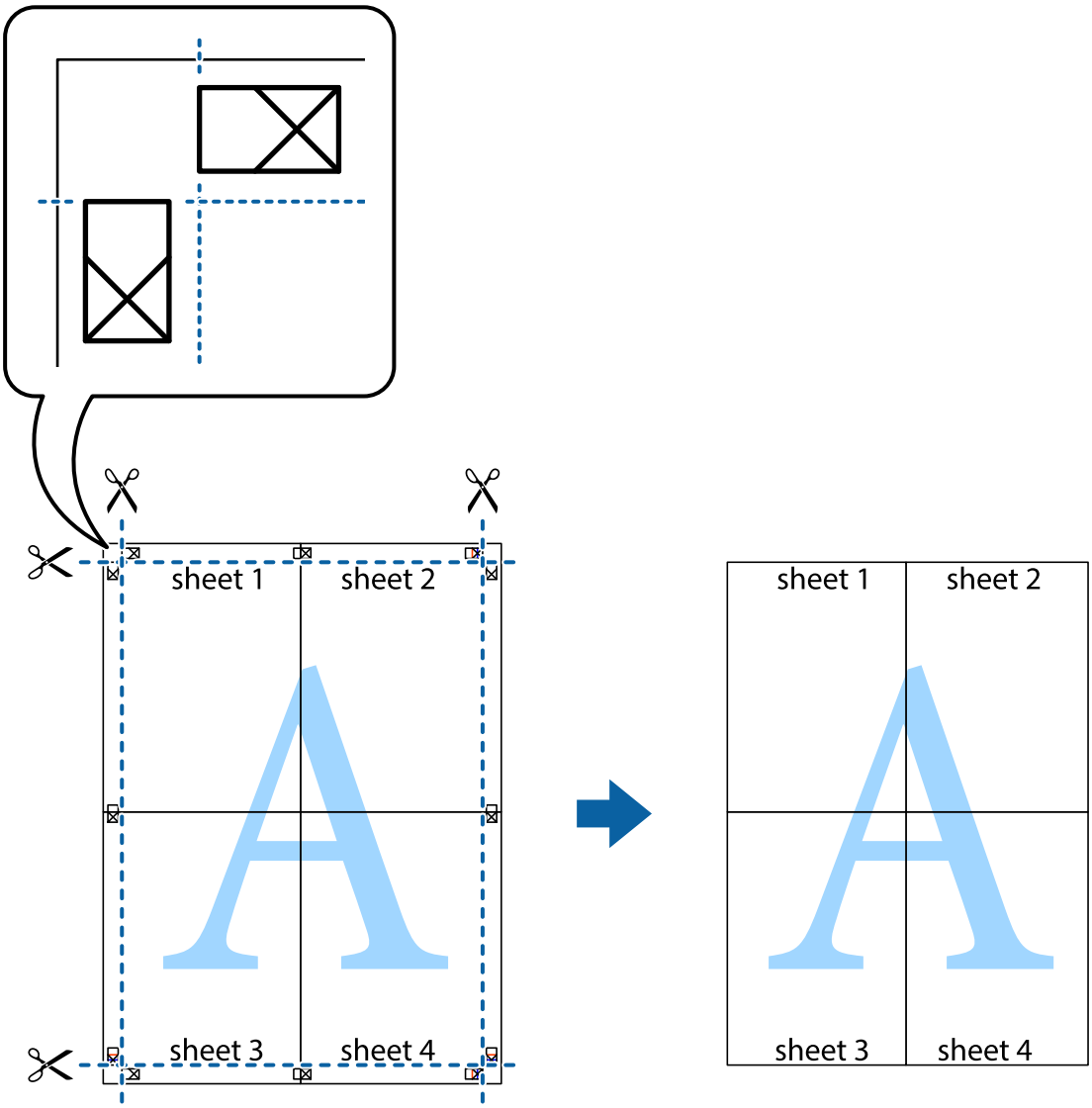

Printing with a Header and Footer

You can print information such as a user name and printing date in headers or footers.

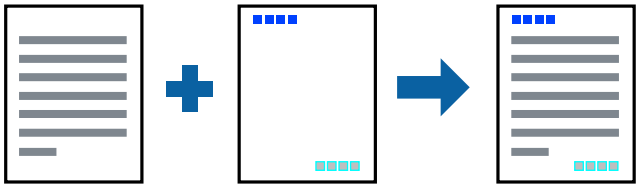

1. On the printer driver's **More Options** tab, click **Watermark Features**, and then select **Header/Footer**.

2. **Settings**, and then select the items you want to print.

3. Set the other items on the **Main** and **More Options** tabs as necessary, and then click **OK**.

   "Main Tab" on page 42

   "More Options Tab" on page 44

4. Click **Print**.

Related Information

➡ "Loading Paper" on page 31
➡ "Printing Using Easy Settings" on page 64

Printing a Watermark

You can print a watermark such as "Confidential" or an anti-copy pattern on your printouts. If you print with an anti-copy pattern, the hidden letters appear when photocopied in order to distinguish the original from the copies.

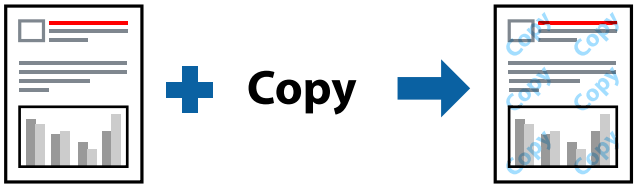

Anti-Copy Pattern is available under the following conditions:

- ❏ Paper Type: Plain paper, Copy paper, Letterhead, Recycled, Color, Preprinted, High Quality Plain Paper, or Thick paper
- ❏ Borderless: Not selected
- ❏ Quality: Standard
- ❏ 2-Sided Printing: Off, Manual (Long-edge binding), or Manual (Short-edge binding)
- ❏ Color Correction: Automatic

Note:
You can also add your own watermark or anti-copy pattern.

1. On the printer driver's **More Options** tab, click **Watermark Features**, and then select Anti-Copy Pattern or Watermark.

2. Click **Settings** to change details such as the size, density, or position of the pattern or the mark.

3. Set the other items on the **Main** and **More Options** tabs as necessary, and then click **OK**.

   "Main Tab" on page 42

   "More Options Tab" on page 44

4. Click **Print**.

Related Information

➡ "Loading Paper" on page 31
➡ "Printing Using Easy Settings" on page 64

Printing Password-Protected Files

Yon can set a password for a print job so that it starts printing only after entering the password on the printer's control panel.

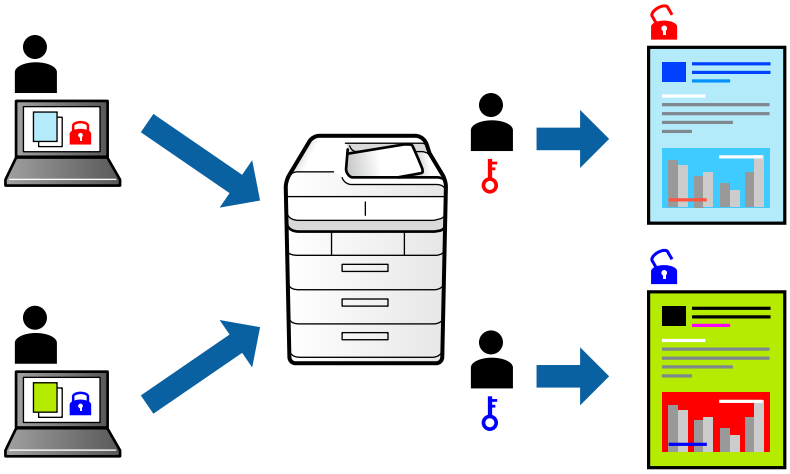

1. On the printer driver's **More Options** tab, select **Confidential Job**, and then enter a password.
2. Set the other items on the **Main** and **More Options** tabs as necessary, and then click **OK**.

   "Main Tab" on page 42

   "More Options Tab" on page 44
3. Click **Print**.
4. To print the job, select **Confidential Job** on the home screen of the printer's control panel. Select the job you want to print, and then enter the password.

Related Information

➡ "Loading Paper" on page 31

➡ "Printing Using Easy Settings" on page 64

Printing Multiple Files Together

Job Arranger Lite allows you to combine several files created by different applications and print them as a single print job. You can specify the print settings for combined files, such as multi-page layout, and 2-sided printing.

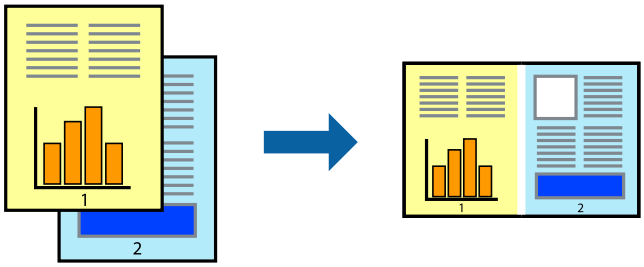

1. On the printer driver's **Main** tab, select **Job Arranger Lite**.

   "Main Tab" on page 42

2. Click **Print**.

   When you start printing, the Job Arranger Lite window is displayed.

3. With the Job Arranger Lite window opened, open the file that you want to combine with the current file, and then repeat the above steps.

4. When you select a print job added to Print Project Lite in the Job Arranger Lite window, you can edit the page layout.

5. Click **Print** from the **File** menu to start printing.

   Note:
   *If you close the Job Arranger Lite window before adding all the print data to the Print Project, the print job you are currently working on is canceled. Click **Save** from the **File** menu to save the current job. The extension of the saved files is "ecl".*

   *To open a Print Project, click **Job Arranger Lite** on the printer driver's **Maintenance** tab to open the Job Arranger Lite window. Next, select **Open** from the **File** menu to select the file.*

Related Information

➡ "Loading Paper" on page 31
➡ "Printing Using Easy Settings" on page 64

Printing Using the Color Universal Print Feature

You can enhance the visibility of texts and images in printouts.

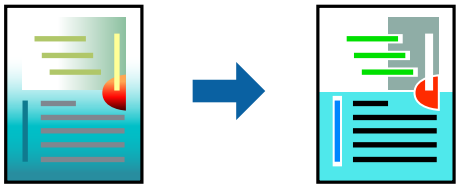

Color Universal Print is only available when the following settings are selected.

- ❏ Paper Type: Plain paper, Copy paper, Letterhead, Recycled paper, Colored paper, Preprinted paper, High quality plain paper
- ❏ Quality: **Standard** or a higher quality
- ❏ Print Color:**Color**
- ❏ Applications: Microsoft® Office 2007 or later
- ❏ Text Size: 96 pts or smaller

1. On the printer driver's **More Options** tab, click **Image Options** in the **Color Correction** setting.

2. Select an option from the **Color Universal Print** setting.

3. **Enhancement Options** to make further settings.

4. Set the other items on the **Main** and **More Options** tabs as necessary, and then click **OK**.

   "Main Tab" on page 42

   "More Options Tab" on page 44

5. Click **Print**.

   Note:
   - *Certain characters may be altered by patterns, such as "+" appearing as "±".*
   - *Application-specific patterns and underlines may alter content printed using these settings.*
   - *Print quality may decrease in photos and other images when using Color Universal Print settings.*
   - *Printing is slower when using Color Universal Print settings.*

Related Information

➡ "Loading Paper" on page 31
➡ "Printing Using Easy Settings" on page 64

Adjusting the Print Color

You can adjust the colors used in the print job. These adjustments are not applied to the original data.

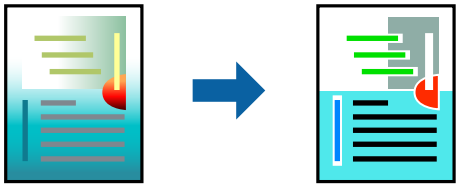

PhotoEnhance produces sharper images and more vivid colors by automatically adjusting the contrast, saturation, and brightness of the original image data.

Note:
PhotoEnhance *adjusts the color by analyzing the location of the subject. Therefore, if you have changed the location of the subject by reducing, enlarging, cropping, or rotating the image, the color may change unexpectedly. Selecting the borderless setting also changes the location of the subject resulting in changes in color. If the image is out of focus, the tone may be unnatural. If the color is changed or becomes unnatural, print in a mode other than* ***PhotoEnhance****.*

1. On the printer driver's **More Options** tab, select the method of color correction from the **Color Correction** setting.
   - AutomaticThis setting automatically adjusts the tone to match the paper type and print quality settings.
   - If you select Custom and click **Advanced**, you can make your own settings.

2. Set the other items on the **Main** and **More Options** tabs as necessary, and then click **OK**.

   "Main Tab" on page 42

   "More Options Tab" on page 44

3. Click **Print**.

Related Information

➡ "Loading Paper" on page 31
➡ "Printing Using Easy Settings" on page 64

Printing to Emphasize Thin Lines

You can thicken thin lines that are too thin to print.

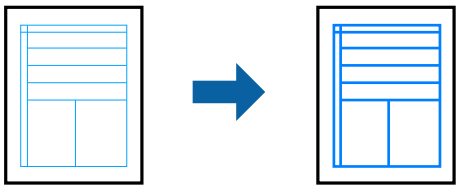

1. On the printer driver's **More Options** tab, click **Image Options** in the **Color Correction** setting.
2. Select **Emphasize Thin Lines**.
3. Set the other items on the **Main** and **More Options** tabs as necessary, and then click **OK**.

   "Main Tab" on page 42
   "More Options Tab" on page 44
4. Click **Print**.

Related Information

➡ "Loading Paper" on page 31
➡ "Printing Using Easy Settings" on page 64

Printing Clear Bar Codes

You can print a bar code clearly and make it easy to scan. Only enable this feature if the bar code you printed cannot be scanned.

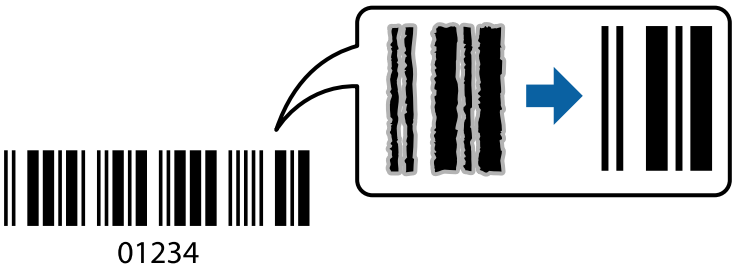

You can use this feature under the following conditions.

- ❑ Paper Type: Plain paper, Copy paper, Letterhead, Recycled, Color, Preprinted, High Quality Plain Paper, Thick paper, Epson Photo Quality Ink Jet, Epson Matte, or Envelope
- ❑ Quality: **Standard**

1. On the printer driver's **Maintenance** tab, click **Extended Settings**, and then select **Barcode mode**.

2. Set the other items on the **Main** and **More Options** tabs as necessary, and then click **OK**.

   "Main Tab" on page 42

   "More Options Tab" on page 44

3. Click **Print**.

   Note:
   Deblurring may not always be possible depending on the circumstances.

Related Information

➡ "Loading Paper" on page 31
➡ "Printing Using Easy Settings" on page 64

Printing from a Computer - Mac OS

Printing Using Easy Settings

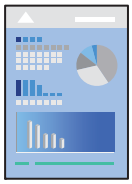

Note:
Operations and screens differ depending on the application. See the application's help for details.

1. Load paper in the printer.

   "Loading Paper" on page 31

2. Open the file you want to print.

3. Select **Print** from the **File** menu or another command to access the print dialog.

   If necessary, click **Show Details** or▼ to expand the print window.

4. Select your printer.

5. Select **Print Settings** from the pop-up menu.

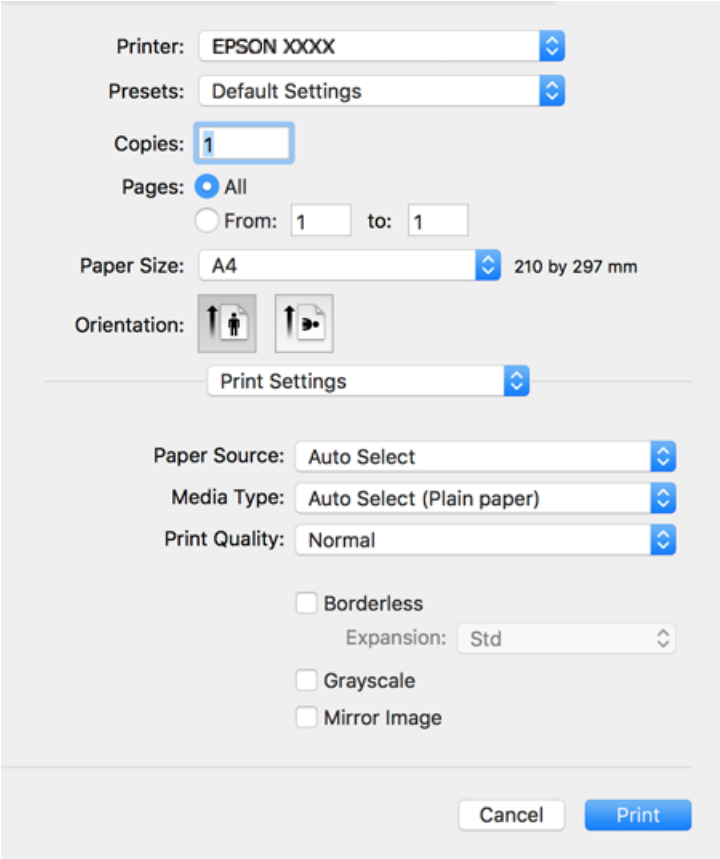

Note:
*If the **Print Settings** menu is not displayed on macOS High Sierra, macOS Sierra, OS X El Capitan, OS X Yosemite, OS X Mavericks, OS X Mountain Lion, the Epson printer driver has not been installed correctly. Enable it from the following menu. macOS Catalina and macOS Mojave cannot access **Print Settings** in applications made by Apple such as TextEdit.*

*Select **System Preferences** from the Apple menu > **Printers & Scanners** (or **Print & Scan**, **Print & Fax**), remove the printer, and then add the printer again. See the following to add a printer.*

"Adding the Printer (for Mac OS Only)" on page 158

6. Change the settings as necessary.

   See the menu options for the printer driver for details.

7. Click **Print**.

   Note:
   *If you want to cancel printing, on your computer click the printer icon in the **Dock**. Select the job you want to cancel, and then do one of the following. However, you cannot cancel a print job from the computer once it has been completely sent to the printer. In this case, cancel the print job by using the printer's control panel.*

   ❏ *OS X Mountain Lion or later*

   Click ⊗ *next to the progress meter.*

   ❏ *Mac OS X v10.6.8 to v10.7.x*

   *Click **Delete**.*

Related Information

➡ "Available Paper and Capacities" on page 287
➡ "List of Paper Type" on page 31
➡ "Menu Options for Print Settings" on page 67

Menu Options for the Printer Driver

Open the print window in an application, select the printer, and then access the printer driver window.

Note:
Menus vary depending on the option you selected.

Menu Options for Layout

Pages per Sheet:

Select the number of pages to be printed on one sheet.

Layout Direction:

Specify the order in which the pages will be printed.

Border:

Prints a border around the pages.

Reverse page orientation:

Rotates pages 180 degrees before printing. Select this item when printing on paper such as envelopes that are loaded in fixed direction in the printer.

Flip horizontally:

Inverts an image to print as it would appear in a mirror.

Menu Options for Color Matching

ColorSync/EPSON Color Controls:

Select the method for color adjustment. These options adjusts colors between the printer and the computer display to minimize the difference in color.

Menu Options for Paper Handling

Collate pages:

Prints multi-page documents collated in order and sorted into sets.

Pages to Print:

Select to print only odd pages or even pages.

Page Order:

Select to print from the top or the last page.

Scale to fit paper size:

Prints to fit to the paper size you loaded.

❏ Destination Paper Size:

Select the paper size to print on.

❏ Scale down only:

Select when reducing the size of the document.

Menu Options for Cover Page

Print Cover Page:

Select whether or not to print a cover page. When you want to add a back cover, select **After document**.

Cover Page Type:

Select the contents of the cover page.

Menu Options for Print Settings

Paper Source:

Select the paper source from which the paper is fed. Select **Auto Select** to automatically select the paper source selected in the print settings on the printer.

Media Type:

Select the type of paper on which you print.

Print Quality:

Select the pint quality you want to use for printing. The options vary depending on the paper type.

Borderless:

This checkbox is selected when you select a borderless paper size.

In borderless printing, the print data is enlarged slightly more than the paper size so that no margins are printed around the edges of the paper.

Expansion: Select the amount of enlargement.

Grayscale:

Select when you want to print in black or shades of gray.

Mirror Image:

Inverts the image so that it prints as it would appear in a mirror.

Menu Options for Color Options

Manual Settings:

Adjusts the color manually. In **Advanced Settings**, you can select detailed settings.

PhotoEnhance:

Produces sharper images and more vivid colors by automatically adjusting the contrast, saturation, and brightness of the original image data.

Off (No Color Adjustment):

Print without enhancing or adjusting the color in any way.

Menu Options for Two-sided Printing Settings

Two-sided Printing:

Prints on both sides of the paper.

Adding Printing Presets for Easy Printing

If you create your own preset of frequently used print settings on the printer driver, you can print easily by selecting the preset from the list.

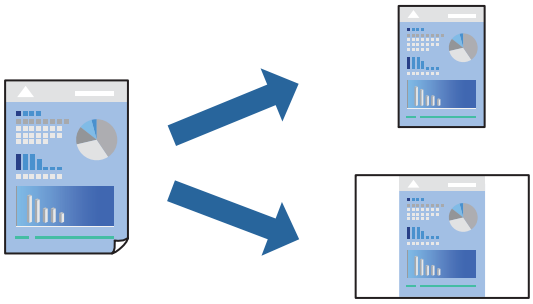

1. Set each item such as **Print Settings** and **Layout** (**Paper Size**, **Media Type**, and so on).

2. Click **Presets** to save the current settings as a preset.

3. Click **OK**.

   Note:
   *To delete an added preset, click **Presets** > **Show Presets**, select the preset name you want to delete from the list, and then delete it.*

4. Click **Print**.

The next time you want to print using the same settings, select the registered preset name from the **Presets**.

Related Information

➡ "Loading Paper" on page 31
➡ "Printing Using Easy Settings" on page 64

Printing on 2-Sides

You can print on both sides of the paper.

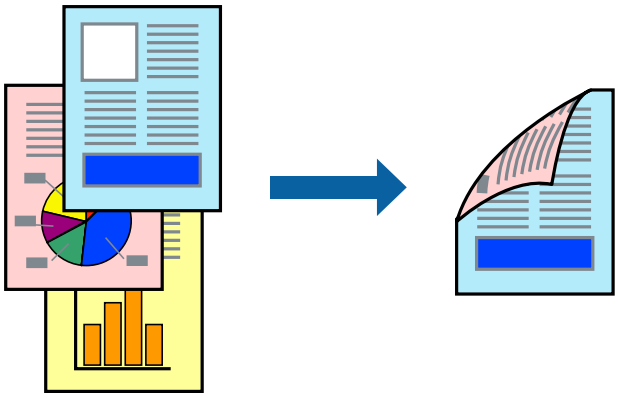

Note:

- ❏ *This feature is not available with borderless printing.*
- ❏ *If you do not use paper that is suitable for 2-sided printing, the print quality may decline and paper jams may occur.*
  "Paper for 2-Sided Printing" on page 291
- ❏ *Depending on the paper and the data, ink may bleed through to the other side of the paper.*

1. Select **Two-sided Printing Settings** from the pop-up menu.
2. Select the bindings in **Two-sided Printing**.
3. Select the type of original in **Document Type**.

   Note:
   - ❏ *Printing may be slow depending on the **Document Type** setting.*
   - ❏ *If you are printing high-density data such as photos or graphs, select **Text & Photos** or **Text & Graphics** as the **Document Type** setting. If scuffing occurs or the image bleeds through to the reverse side, adjust the print density and ink drying time by clicking the arrow mark next to **Adjustments**.*
4. Set the other items as necessary.
5. Click **Print**.

Related Information

➡ "Available Paper and Capacities" on page 287
➡ "Loading Paper" on page 31
➡ "Printing Using Easy Settings" on page 64

Printing Several Pages on One Sheet

You can print several pages of data on a single sheet of paper.

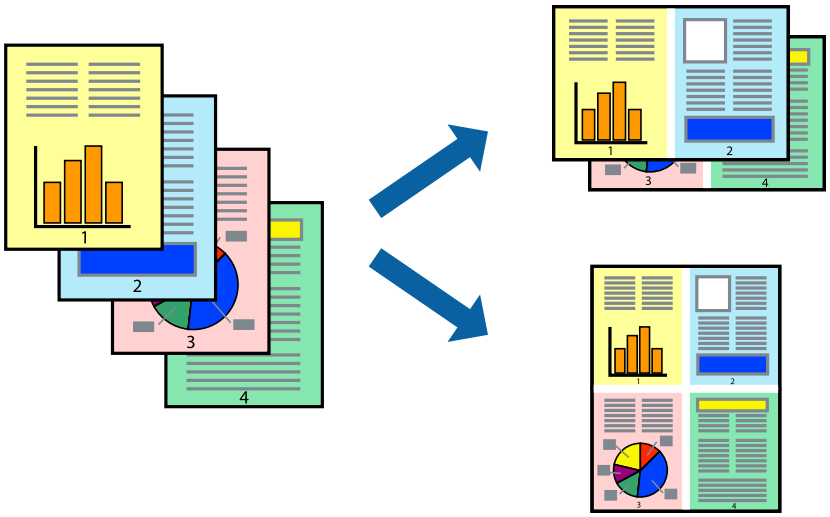

1. Select **Layout** from the pop-up menu.
2. Set the number of pages in **Pages per Sheet**, the **Layout Direction** (page order), and **Border**.
   "Menu Options for Layout" on page 66
3. Set the other items as necessary.
4. Click **Print**.

Related Information

➡ "Loading Paper" on page 31
➡ "Printing Using Easy Settings" on page 64

Printing to Fit the Paper Size

Select the paper size you loaded in the printer as the Destination Paper Size setting.

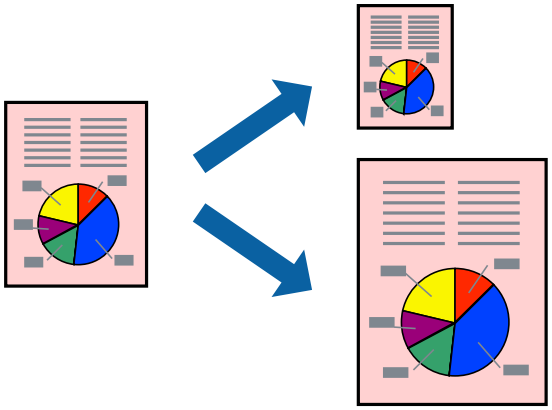

1. Select the size of the paper you set in the application as the **Paper Size** setting.
2. Select **Paper Handling** from the pop-up menu.
3. Select **Scale to fit paper size**.
4. Select the paper size you loaded in the printer as the **Destination Paper Size** setting.
5. Set the other items as necessary.
6. Click **Print**.

Related Information

➡ "Loading Paper" on page 31
➡ "Printing Using Easy Settings" on page 64

Printing a Reduced or Enlarged Document at any Magnification

You can reduce or enlarge the size of a document by a specific percentage.

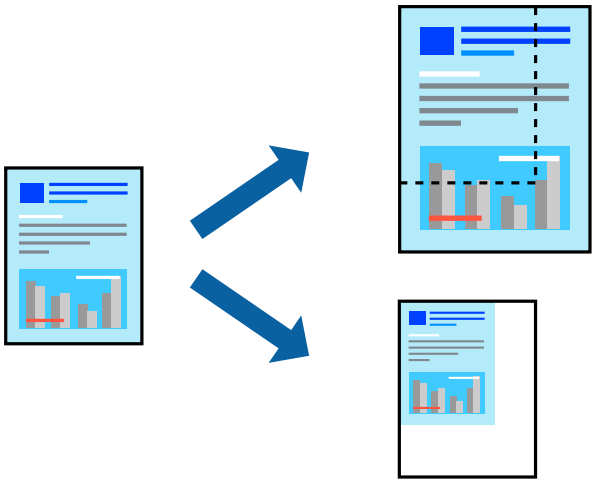

1. Select **Print** from the **File** menu or another command to access the print dialog.
2. Select **Page Setup** from the **File** menu of the application.
3. Select **Printer**, **Paper Size**, enter percentage in **Scale**, and then click **OK**.

   Note:
   *Select the paper size you set in the application as the **Paper Size** setting.*
4. Set the other items as necessary.
5. Click **Print**.

Related Information

➡ "Loading Paper" on page 31

➡ "Printing Using Easy Settings" on page 64

Adjusting the Print Color

You can adjust the colors used in the print job. These adjustments are not applied to the original data.

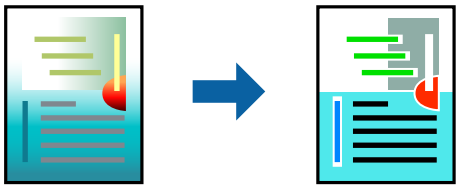

PhotoEnhance produces sharper images and more vivid colors by automatically adjusting the contrast, saturation, and brightness of the original image data.

Note:
PhotoEnhance *adjusts the color by analyzing the location of the subject. Therefore, if you have changed the location of the subject by reducing, enlarging, cropping, or rotating the image, the color may change unexpectedly. Selecting the borderless setting also changes the location of the subject resulting in changes in color. If the image is out of focus, the tone may be unnatural. If the color is changed or becomes unnatural, print in a mode other than* ***PhotoEnhance****.*

1. Select **Color Matching** from the pop-up menu, and then select **EPSON Color Controls**.
2. Select **Color Options** from the pop-up menu, and then select one of the available options.
3. Click the arrow next to **Advanced Settings** and make the appropriate settings.
4. Set the other items as necessary.
5. Click **Print**.

Related Information

➡ "Loading Paper" on page 31
➡ "Printing Using Easy Settings" on page 64

Printing Documents from Smart Devices (iOS)

You can print documents from a smart device such as a smartphone or tablet.

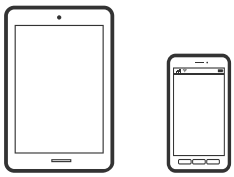

Printing Documents Using Epson iPrint

Note:
Operations may differ depending on the device.

1. Set up your printer for wireless printing.
2. If Epson iPrint is not installed, install it.

   "Installing Epson iPrint" on page 296
3. Connect your smart device to the wireless router.
4. Start Epson iPrint.
5. Tap **Document** on the home screen.
6. Tap the location of the document you want to print.
7. Select the document, and then tap **Next**.
8. Tap **Print**.

Printing Documents Using AirPrint

AirPrint enables instant wireless printing from iPhone, iPad, iPod touch, and Mac without the need to install drivers or download software.

Works with Apple AirPrint

Note:
If you disabled paper configuration messages on your printer control panel, you cannot use AirPrint. See the link below to enable the messages, if necessary.

1. Set up your printer for wireless printing. See the link below.

   http://epson.sn
2. Connect your Apple device to the same wireless network that your printer is using.
3. Print from your device to your printer.

   Note:
   For details, see the AirPrint page on the Apple website.

Related Information

➡ "Cannot Print Even Though a Connection has been Established (iOS)" on page 189

Printing Documents from Smart Devices (Android)

You can print documents from a smart device such as a smartphone or tablet.

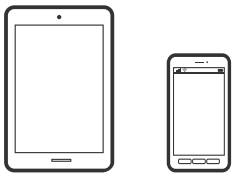

Printing Documents Using Epson iPrint

Note:
Operations may differ depending on the device.

1. Set up your printer for wireless printing.
2. If Epson iPrint is not installed, install it.
   "Installing Epson iPrint" on page 296
3. Connect your smart device to the wireless router.
4. Start Epson iPrint.
5. Tap **Document** on the home screen.
6. Tap the location of the document you want to print.
7. Select the document, and then tap **Next**.
8. Tap **Print**.

Printing Documents Using Epson Print Enabler

You can wirelessly print your documents, emails, photos, and web pages right from your Android phone or tablet (Android v4.4 or later). With a few taps, your Android device will discover an Epson printer that is connected to the same wireless network.

Note:
Operations may differ depending on the device.

1. Set up your printer for wireless printing.
2. On your Android device, install the Epson Print Enabler plug-in from Google Play.
3. Connect your Android device to the same wireless network as your printer.
4. Go to **Settings** on your Android device, select **Printing**, and then enable Epson Print Enabler.

5. From an Android application such as Chrome, tap the menu icon and print whatever is on the screen.

   Note:
   *If you do not see your printer, tap **All Printers** and select your printer.*

Printing Using Mopria Print Service

Mopria Print Service enables instant wireless printing from Android smart phones or tablets.

1. Install Mopria Print Service from Google Play.
2. Load paper in the printer.
3. Set up your printer for wireless printing. See the link below.

   http://epson.sn
4. Connect your Android device to the same wireless network that your printer is using.
5. Print from your device to your printer.

   Note:
   For more details, access the Mopria Web site at https://mopria.org.

Related Information

➡ "Loading Paper" on page 31

Printing on Envelopes

Printing on Envelopes from a Computer (Windows)

1. Load envelopes in the printer.

   "Loading Paper" on page 31
2. Open the file you want to print.
3. Access the printer driver window.
4. Select the envelope size from **Document Size** on the **Main** tab, and then select **Envelope** from **Paper Type**.
5. Set the other items on the **Main** and **More Options** tabs as necessary, and then click **OK**.
6. Click **Print**.

Printing on Envelopes from a Computer (Mac OS)

1. Load envelopes in the printer.
   "Loading Paper" on page 31
2. Open the file you want to print.
3. Select **Print** from the **File** menu or another command to access the print dialog.
4. Select the size as the **Paper Size** setting.
5. Select **Print Settings** from the pop-up menu.
6. Select **Envelope** as the **Media Type** setting.
7. Set the other items as necessary.
8. Click **Print**.

Printing Photos

Printing JPEG Files from a Memory Device

You can print JPEG files from a memory device connected to the printer.

1. Connect the memory device to the printer's external interface USB port.
   "Inserting an External USB Device" on page 38
2. Select **Memory Device** on the home screen.
3. Select **JPEG**.
4. Select the file, and then proceed to the next screen.
5. Tap ◇.

JPEG Settings

(Options) :

Make settings for ordering, selecting, and deselecting image data.

Basic Settings:

❏ Paper Setting

Specify the paper source settings which you want to print on.

❏ Color Mode

Select a color setting whether you normally print in **B&W** or **Color**.

Advanced:

❏ Layout

Select how to layout the JPEG files. **1-up** is for printing one file per sheet with margins around the edges. **Borderless** is for printing one file per sheet without margins around the edges. The image is enlarged a little to remove borders from the edges of the paper. **20-up** is for printing 20 files on one sheet. **Index** is for making index printing with information.

❏ Fit Frame

Select **On** to crop the image to fit into the selected print layout automatically. If the aspect ratio of the image data and the paper size is different, the image is automatically enlarged or reduced so that the short sides match the short sides of the paper. The long side of the image is cropped if it extends beyond the long side of the paper. This feature may not work for panorama photos.

❏ Quality

Select **Best** for higher quality printing, but the printing speed may be slower.

❏ Date

Select the format of the date the photo was taken or saved. The date is not printed for some layouts.

❏ Fix Photo

Select this mode to improve the brightness, contrast, and saturation of the photo automatically. To turn off automatic improvement, select **Enhance Off**.

❏ Fix Red-Eye

Select **On** to automatically fix the red-eye effect in photos. Corrections are not applied to the original file, only to the printouts. Depending on the type of photo, parts of the image other than the eyes may be corrected.

Printing TIFF Files from a Memory Device

You can print TIFF files from a memory device connected to the printer.

1. Connect the memory device to the printer's external interface USB port.

   "Inserting an External USB Device" on page 38

2. Select **Memory Device** on the home screen.

3. Select **TIFF**.

4. Select the file, and then proceed to the next screen.

5. Tap ◇.

TIFF Settings

You can make print settings for TIFF format files in you memory devices.

(Display order) :

Changes the order of the files.

Basic Settings:

- Paper Setting

  Specify the paper source settings which you want to print on.

- Color Mode

  Select a color setting whether you normally print in **B&W** or **Color**.

Advanced:

- Layout

  Select how to layout the Multi-TIFF file. **1-up** is for printing one page per sheet with margins around the edges. **Borderless** is for printing one page per sheet without margins around the edges. The image is enlarged a little to remove borders from the edges of the paper. **20-up** is for printing 20 pages on one sheet. **Index** is for making index printing with information.

- Fit Frame

  Select **On** to crop the photo to fit into the selected photo layout automatically. If the aspect ratio of the image data and the paper size is different, the image is automatically enlarged or reduced so that the short sides match the short sides of the paper. The long side of the image is cropped if it extends beyond the long side of the paper. This feature may not work for panorama photos.

- Quality

  Select **Best** for higher quality printing, but the printing speed may be slower.

- Print Order

  Select the order for printing multi-page TIFF files.

- Date

  Select the format of the date the photo was taken or saved. The date is not printed for some layouts.

Printing Web Pages

Printing Web Pages from a Computer

Epson Photo+ allows you to display web pages, crop the specified area, and then edit and print them. See the application's help for details.

Printing Web Pages from Smart Devices

Note:
Operations may differ depending on the device.

1. Set up your printer for wireless printing.

2. If Epson iPrint is not installed, install it.

   "Installing Epson iPrint" on page 296

3. Connect your smart device to the wireless router.
4. Open the web page you want to print in your web browser app.
5. Tap **Share** from the menu of the web browser application.
6. Select **iPrint**.
7. Tap **Print**.

Printing Using a Cloud Service

By using Epson Connect service available on the Internet, you can print from your smart phone, tablet PC, or laptop, anytime and practically anywhere. To use this service, you need to register the user and the printer in Epson Connect.

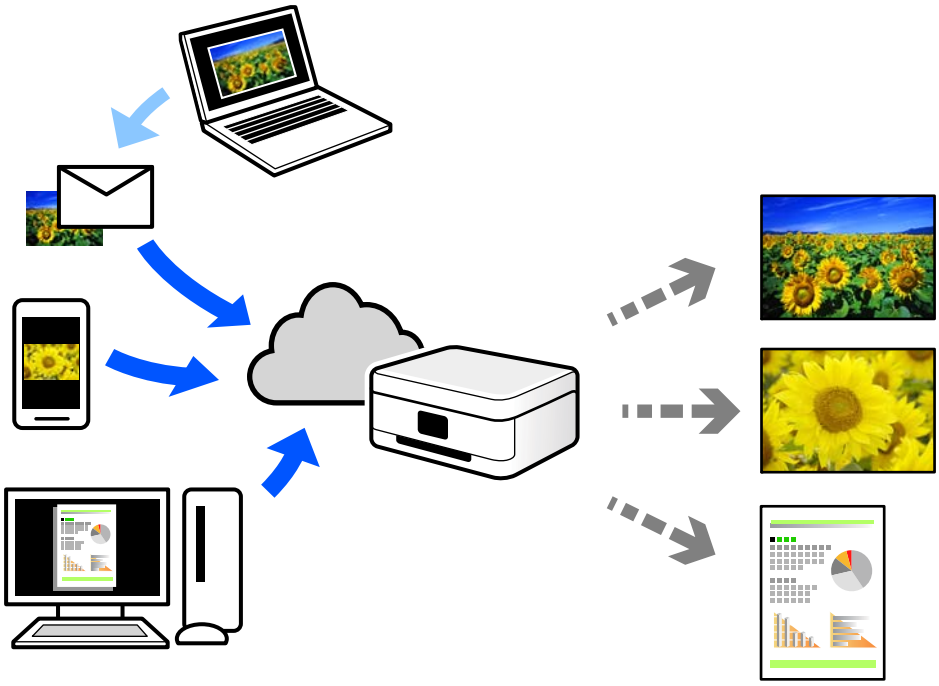

The features available on the Internet are as follows.

❏ Email Print

When you send an email with attachments such as documents or images to an email address assigned to the printer, you can print that email and the attachments from remote locations such as your home or office printer.

❏ Epson iPrint

This Application is for iOS and Android, and allows you to print or scan from a smart phone or tablet. You can print documents, images, and web sites by sending them directly to a printer on the same wireless LAN.

❏ Remote Print Driver

This is a shared driver supported by Remote Print Driver. When printing using a printer in a remote location, you can print by changing the printer on the usual applications window.

See the Epson Connect web portal for details on how to setup or print.

https://www.epsonconnect.com/

http://www.epsonconnect.eu (Europe only)

Registering to Epson Connect Service from the Control Panel

Follow the steps below to register the printer.

1. Select **Settings** on the control panel.
2. Select **General Settings** > **Web Service Settings** > **Epson Connect Services** > **Unregister** to print the registration sheet.
3. Follow the instructions on the registration sheet to register the printer.

Copying

Available Copying Methods. 82

Basic Menu Options for Copying. 86

Advanced Menu Options for Copying. 88

Available Copying Methods

Place the originals on the scanner glass or the ADF, and then select the **Copy** menu on the home screen.

Copying Originals

You can copy the originals of fixed size or custom size by color or monochrome.

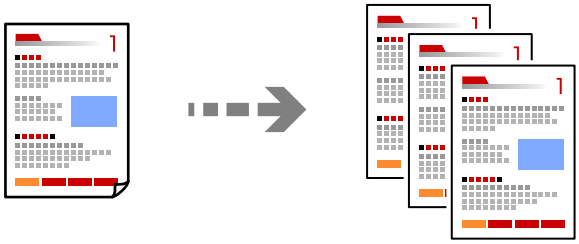

1. Place the originals.

   "Placing Originals" on page 35

2. Select **Copy** on the home screen.

3. Select the **Basic Settings** tab, and then select **B&W** or **Color**.

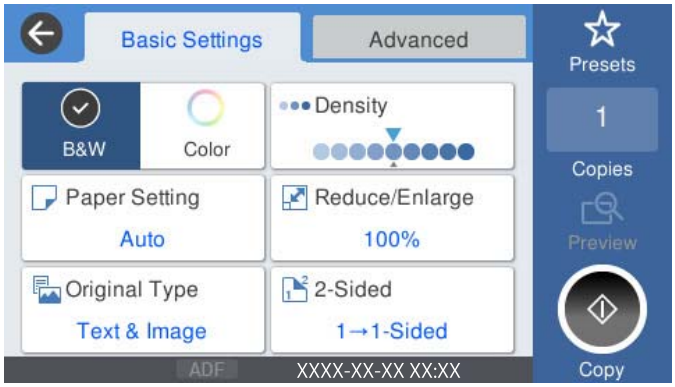

4. Tap ⟐.

Copying on 2-Sides

Copy multiple originals on both sides of the paper.

1. Place all originals face up in the ADF.

> ***Important:***
> *If you want to copy originals that are not supported by the ADF, use the scanner glass.*
> *"Originals that are not Supported by the ADF" on page 36*

Note:
You can also place the originals on the scanner glass.
"Placing Originals" on page 35

2. Select **Copy** on the home screen.

3. Select the **Basic Settings** tab, select **2-Sided**, and then select **2→2-Sided** or **1→2-Sided**

4. Specify other settings such as the original orientation and the binding position.

5. Tap ◇.

Copying by Enlarging or Reducing

You can copy originals at a specified magnification.

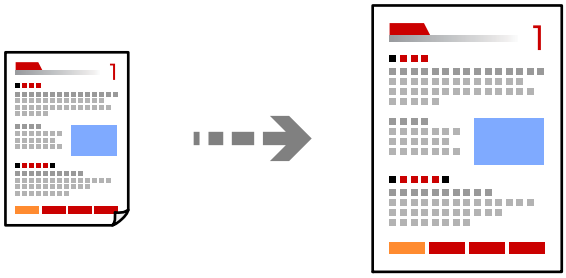

1. Place the originals.
"Placing Originals" on page 35

2. Select **Copy** on the home screen.

3. Select the **Basic Settings** tab, and then select **Reduce/Enlarge**.

4. Specify the amount of enlargement or reduction.

5. Tap ◇.

Copying Multiple Originals onto One Sheet

You can copy the multiple originals onto a single sheet.

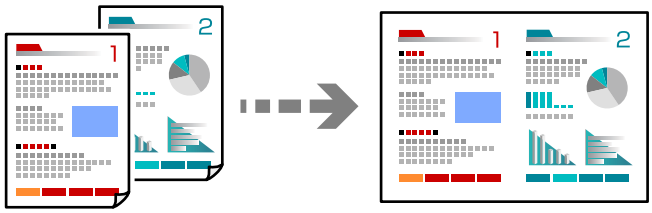

1. Place all originals face up in the ADF.

   Place them in the direction shown in the illustration.

   ❏ Readable Direction

   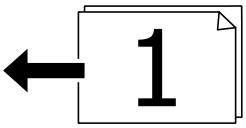

   ❏ Left Direction

   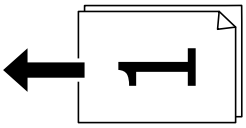

   > **Important:**
   > *If you want to copy originals that are not supported by the ADF, use the scanner glass.*
   > *"Originals that are not Supported by the ADF" on page 36*

   Note:
   You can also place the originals on the scanner glass.
   "Placing Originals" on page 35

2. Select **Copy** on the home screen.

3. Select the **Advanced** tab, select **Multi-Page**, and then select **2-up** or **4-up**.

4. Specify the layout order and the original orientation.

5. Tap ⟐.

Copying in Page Order

When making multiple copies of a multi-page document, you can discharge one copy at a time in page order.

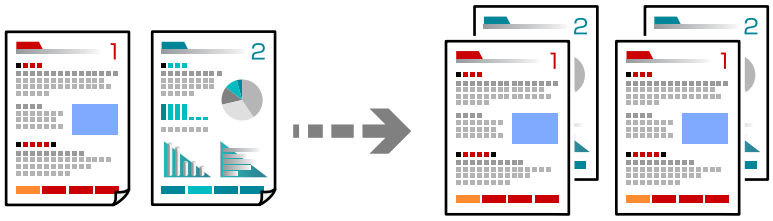

1. Place the originals.

   "Placing Originals" on page 35

2. Select **Copy** on the home screen.

3. Select the **Advanced** tab, and then select **Finishing** > **Collate (Page Order)**.

4. Tap ◇.

Copying Originals Using Good Quality

You can copy originals without shadows and punched holes.

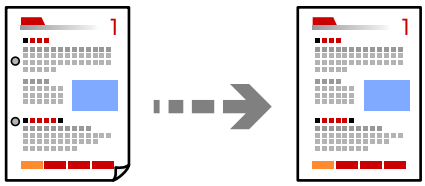

1. Place the originals.

   "Placing Originals" on page 35

2. Select **Copy** on the home screen.

3. Select the **Advanced** tab, and then enable **Remove Shadow** or **Remove Punch Holes** or adjust the image quality in **Image Quality**.

4. Tap ◇.

Copying ID card

Scans both sides of an ID card and copies onto one side of a paper.

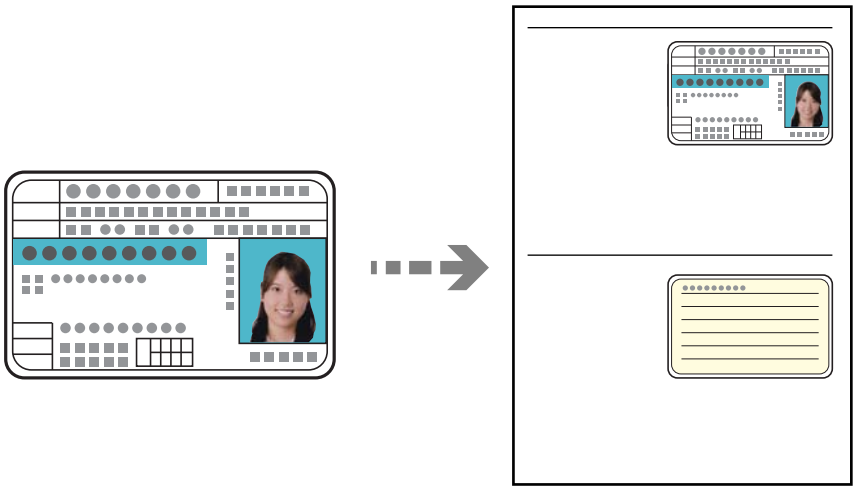

1. Place the originals.

   "Placing Originals" on page 35

2. Select **Copy** on the home screen.

3. Select the **Advanced** tab, select **ID Card Copy**, and then enable the setting.

4. Specify the **Orientation (Original)**.

5. Tap ◇.

Basic Menu Options for Copying

Note:
The items may not be available depending on other settings you made.

Color Mode:

Select whether to copy in color or in monochrome.

❏ B&W

Copies the original in black and white (monochrome).

❏ Color

Copies the original in color.

Density:

Increase the level of density when the copying results are faint. Decrease the level of density when ink smears.

Paper Setting:

Select the paper source that you want to use. When **Auto** is selected, paper is fed automatically using the **Paper Setting** settings made when you loaded the paper.

Reduce/Enlarge:

Configures the magnification ratio of the enlargement or reduction. Tap the value and specify the magnification used to enlarge or reduce the original within a range of 25 to 400%.

❏ Auto

Detects the scan area and automatically enlarges or reduces the original to fit to the paper size you selected. When there are white margins around the original, the white margins from the corner mark ( ) of the scanner glass are detected as the scan area, but the margins at the opposite side may be cropped.

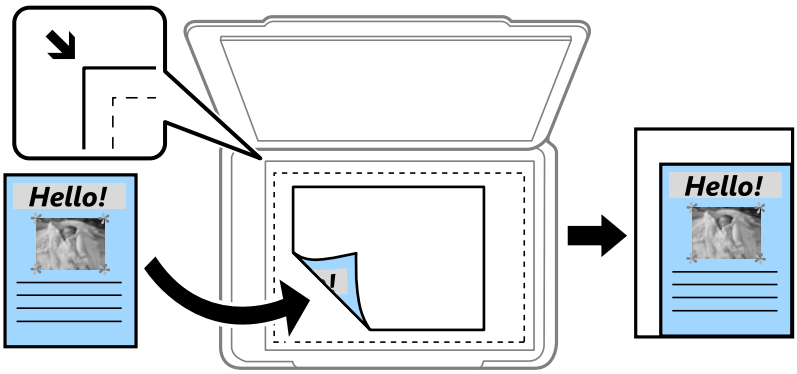

❏ Reduce to Fit Paper

Copies the scanned image at a smaller size than the Reduce/Enlarge value to fit within the paper size. If the Reduce/Enlarge value is larger than the paper size, data may be printed beyond the edges of the paper.

❏ Actual Size

Copies at 100 % magnification.

❏ A4→A5 and others

Automatically enlarges or reduces the original to fit to a specific paper size.

Original Type:

Select the type of your original. Copies in optimal quality to match the type of original.

2-Sided:

Select 2-sided layout.

❏ 1→1-Sided

Copies one side of an original onto a single side of paper.

❏ 2→2-Sided

Copies both sides of a double-sided original onto both sides of a single sheet of paper. Select the orientation of your original and the binding position of the original and the paper.

❏ 1→2-Sided

Copies two single-sided originals onto both sides of a single sheet of paper. Select the orientation of your original and the binding position of the paper.

❏ 2→1-Sided

Copies both sides of a double-sided original onto one side of two sheets of paper. Select the orientation of your original and the binding position of the original.

Advanced Menu Options for Copying

Note:
The items may not be available depending on other settings you made.

Multi-Page:

Select the copy layout.

❏ Single Page

Copies a single-sided original onto a single sheet.

❏ 2-up

Copies two single-sided originals onto a single sheet in 2-up layout. Select the layout order and the orientation of your original.

❏ 4-up

Copies four single-sided originals onto a single sheet in 4-up layout. Select the layout order and the orientation of your original.

Original Size:

Select the size of your original. When copying non-standard size originals, select the size closest to your original.

Finishing:

Select how to eject the paper for multiple copies of multiple originals.

❏ Group (Same Pages)

Copies the originals by page as a group.

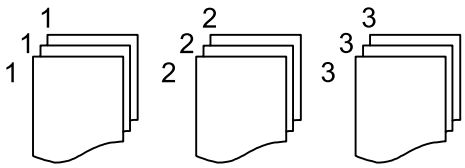

❏ Collate (Page Order)

Copies the originals collated in order and sorted into sets.

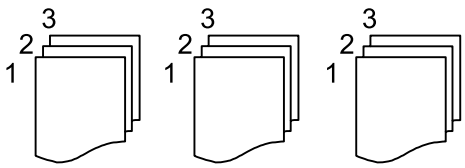

Orientation (Original):

Select the orientation of your original.

Image Quality:

Adjust image settings.

- ❏ Contrast

  Adjust the difference between the bright and dark parts.

- ❏ Saturation

  Adjust the vividness of the colors.

- ❏ Red Balance, Green Balance, Blue Balance

  Adjust the density for each color.

- ❏ Sharpness

  Adjust the outline of the image.

- ❏ Hue Regulation

  Adjust the color tone of the skin. Tap + to make it cold (increase green) and tap - to make it warm (increase red).

- ❏ Remove Background

  Adjust the density of the background color. Tap + to make it bright (white) and tap - to make it dark (black).

Binding Margin:

Select such as the binding position, margin, and orientation of your original.

Reduce to Fit Paper:

Copies the scanned image at a smaller size than the Reduce/Enlarge value to fit within the paper size. If the Reduce/Enlarge value is larger than the paper size, data may be printed beyond the edges of the paper.

Remove Shadow:

Removes shadows that appear around copies when copying thick paper or that appear in the center of copies when copying a booklet.

Remove Punch Holes:

Removes the binding holes when copying.

ID Card Copy:

Scans both sides of an ID card and copies onto one side of a paper.

Scanning

Available Scanning Methods. 91

Scanning Originals to a Network Folder. 91

Scanning Originals to an Email. 94

Scanning Originals to a Computer. 97

Scanning Originals to a Memory Device. 98

Scanning Originals to the Cloud. 100

Scanning Using WSD. 102

Scanning Originals to a Smart Device. 104

Available Scanning Methods

You can use any of the following methods to scan using this printer.

Scanning to a Network Folder

You can save the scanned image to a pre-configured folder on a network.

"Scanning Originals to a Network Folder" on page 91

Scanning to an Email

You can send scanned image files by email directly from the printer through a pre-configured email server.

"Scanning Originals to an Email" on page 94

Scanning to a Computer

You can save the scanned image to a computer connected to the printer.

"Scanning Originals to a Computer" on page 97

Scanning to a Memory Device

You can save scanned images directly to a memory device inserted into the printer.

"Scanning Originals to a Memory Device" on page 98

Sending to a Cloud Service

You can send scanned images from the printer's control panel to cloud services that have been registered in advance.

"Scanning Originals to the Cloud" on page 100

Scanning Using WSD

You can save the scanned image to a computer connected to the printer, using WSD feature.

"Scanning Using WSD" on page 102

Scanning Directly from Smart Devices

You can save scanned images directly to a smart device such as a smart phone or tablet by using the Epson iPrint application on the smart device.

"Scanning Originals to a Smart Device" on page 104

Scanning Originals to a Network Folder

Check the following before scanning.

- ❏ Make sure that a network folder is prepared. See the following when creating a shared folder on a network.
  "Creating the Shared Folder" on page 356
- ❏ Register a network folder path in your contacts in advance to easily specify the folder.
  "Making Contacts Available" on page 372

Note:
Make sure the printer's ***Date/Time*** *and* ***Time Difference*** *settings are correct. Access the menus from* ***Settings*** > ***General Settings*** > ***Basic Settings*** > ***Date/Time Settings****.*

1. Place the originals.

   "Placing Originals" on page 35

2. Select **Scan** > **Network Folder/FTP** on the control panel.

3. Specify the destination.

   "Destination Menu Options for Scanning to a Folder" on page 92

   Note:
   You can print the history of the folder in which documents are saved, by selecting Menu.

4. Select **Scan Settings**, and then check settings such as the save format, and change them if necessary.

   "Scan Menu Options for Scanning to a Folder" on page 93

   Note:
   Select ☆ *to save your settings as a preset.*

5. Tap ◇.

Destination Menu Options for Scanning to a Folder

Keyboard:

Open the **Edit Location** screen. Enter the folder path and set each item on the screen.

Edit Location:

Enter the folder path and set each item on the screen.

- ❏ Communication Mode:
  Select the communication mode for the folder.
- ❏ Location (Required):
  Enter a folder path in which to save the scanned image.
- ❏ User Name:
  Enter a user name to log on to the specified folder.
- ❏ Password:
  Enter a password corresponding to the user name.
- ❏ Connection Mode:
  Select the connection mode for the folder.
- ❏ Port Number:
  Enter a port number for the folder.

Contacts:

Select a destination from the contacts list.

You can search for a contact from the contacts list. Enter the search keyword into the box at the top of the screen.

Scan Menu Options for Scanning to a Folder

Note:
The items may not be available depending on other settings you made.

Color Mode:

Select whether to scan in color or in monochrome.

File Format:

Select the format in which to save the scanned image.

❏ Compression Ratio:

Select how much to compress the scanned image.

❏ PDF Settings:

When you have selected PDF as the save format setting, use these settings to protect PDF files.

To create a PDF file that requires a password when opening, set Document Open Password. To create a PDF file that requires a password when printing or editing, set Permissions Password.

Resolution:

Select the scanning resolution.

2-Sided:

Scan both sides of the original.

❏ Orientation (Original):

Select the orientation of the original.

❏ Binding(Original):

Select the binding direction of the original.

Scan Area:

Select the scan area. To crop the white space around the text or image when scanning, select **Auto Cropping**. To scan at the maximum area of the scanner glass, select **Max Area**.

❏ Orientation (Original):

Select the orientation of the original.

Original Type:

Select the type of your original.

Orientation (Original):

Select the orientation of the original.

Density:

Select the contrast of the scanned image.

Remove Shadow:

Remove the shadows of the original that appear in the scanned image.

❏ Frame:

Remove the shadows at the edge of the original.

❏ Center:

Remove the shadows of the binding margin of the booklet.

Remove Punch Holes:

Remove the punch holes that appear in the scanned image. You can specify the area to erase the punch holes by entering a value in the box on the right.

❏ Erasing Position:

Select the position to remove the punch holes.

❏ Orientation (Original):

Select the orientation of the original.

File Name:

❏ Filename Prefix:

Enter a prefix for the name of the images in alphanumeric characters and symbols.

❏ Add Date:

Add the date to the file name.

❏ Add Time:

Add the time to the file name.

Scanning Originals to an Email

You need to setup the following before scanning.

❏ Configure the email server.

"Configuring a Mail Server" on page 352

❏ Register an email address in your contacts in advance so that you can easily specify the address by selecting it from your contacts.

❏ Make sure the printer's **Date/Time** and **Time Difference** settings are correct. Access the menus from **Settings** > **General Settings** > **Basic Settings** > **Date/Time Settings**.

1. Place the originals.

"Placing Originals" on page 35

2. Select **Scan** > **Email** on the control panel.

3. Specify the recipient.

"Recipient Menu Options for Scanning to an Email" on page 95

Note:

- *The number of recipients you selected is displayed on the right of the screen. You can send emails to up to 10 addresses and groups.*

  If groups is included in recipients, you can select up to 200 individual addresses in total, taking addresses in the groups into account.
- *Select the address box at the top of the screen to display the list of selected addresses.*
- *Select Menu to display or print the sending history, or change the email server settings.*

4. Select **Scan Settings**, and then check settings such as the save format, and change them if necessary.

   "Scan Menu Options for Scanning to an Email" on page 95

   Note:

   Select ☆ to save your settings as a preset.

5. Tap ◇.

Recipient Menu Options for Scanning to an Email

Keyboard:

Enter the email address manually.

Contacts:

Select a destination from the contacts list.

You can search for a contact from the contacts list. Enter the search keyword into the box at the top of the screen.

History:

Select the address from the history list.

Scan Menu Options for Scanning to an Email

Note:
The items may not be available depending on other settings you made.

Color Mode:

Select whether to scan in color or in monochrome.

File Format:

Select the format in which to save the scanned image.

- Compression Ratio:

  Select how much to compress the scanned image.
- PDF Settings:

  When you have selected PDF as the save format setting, use these settings to protect PDF files.

  To create a PDF file that requires a password when opening, set Document Open Password. To create a PDF file that requires a password when printing or editing, set Permissions Password.

Resolution:

Select the scanning resolution.

2-Sided:

Scan both sides of the original.

❏ Orientation (Original):

Select the orientation of the original.

❏ Binding(Original):

Select the binding direction of the original.

Scan Area:

Select the scan area. To crop the white space around the text or image when scanning, select **Auto Cropping**. To scan at the maximum area of the scanner glass, select **Max Area**.

❏ Orientation (Original):

Select the orientation of the original.

Original Type:

Select the type of your original.

Orientation (Original):

Select the orientation of the original.

Density:

Select the contrast of the scanned image.

Remove Shadow:

Remove the shadows of the original that appear in the scanned image.

❏ Frame:

Remove the shadows at the edge of the original.

❏ Center:

Remove the shadows of the binding margin of the booklet.

Remove Punch Holes:

Remove the punch holes that appear in the scanned image. You can specify the area to erase the punch holes by entering a value in the box on the right.

❏ Erasing Position:

Select the position to remove the punch holes.

❏ Orientation (Original):

Select the orientation of the original.

Subject:

Enter a subject for the email in alphanumeric characters and symbols.

Attached File Max Size:

Select the maximum file size that can be attached to the email.

File Name:

- ❏ Filename Prefix:

  Enter a prefix for the name of the images in alphanumeric characters and symbols.

- ❏ Add Date:

  Add the date to the file name.

- ❏ Add Time:

  Add the time to the file name.

Scanning Originals to a Computer

Note:
To use this feature, make sure the following applications are installed on your computer.

- ❏ *Epson ScanSmart (Windows 7 or later, or OS X El Capitan or later)*
- ❏ *Epson Event Manager (Windows Vista/Windows XP, or OS X Yosemite/OS X Mavericks/OS X Mountain Lion/Mac OS X v10.7.x/Mac OS X v10.6.8)*
- ❏ *Epson Scan 2 (application required to use the scanner feature)*

See the following to check for installed applications.

*Windows 10: Click the start button, and then check the **Epson Software** folder > **Epson ScanSmart**, and the **EPSON** folder > **Epson Scan 2**.*

Windows 8.1/Windows 8: Enter the application name in the search charm, and then check the displayed icon.

*Windows 7: Click the start button, and then select **All Programs**. Next, check the **Epson Software** folder > **Epson ScanSmart**, and the **EPSON** folder > **Epson Scan 2**.*

*Windows Vista/Windows XP: Click the start button, and then select **All Programs** or **Programs**. Next, check the **Epson Software** folder > **Epson Event Manager**, and the **EPSON** folder > **Epson Scan 2**.*

*Mac OS: Select **Go** > **Applications** > **Epson Software**.*

1. Place the originals.

   "Placing Originals" on page 35

2. Select **Scan** > **Computer** on the control panel.

3. Select a computer on which to save the scanned images.

4. Make the scan settings.

   - ❏ Select action: Select saving method.

     When using Windows 7 or later, or OS X El Capitan or later: Select **Preview on Computer** to preview the scanned image on your computer before saving images.

   - ❏ 2-Sided: Scan both sides of the original.

5. Tap ◇.

   When using Windows 7 or later, or OS X El Capitan or later: Epson ScanSmart automatically starts on your computer, and scanning starts.

Note:

- *See the Epson ScanSmart help for detailed operation information for the software. Click **Help** on the Epson ScanSmart screen to open the help.*
- *You can not only start scanning from the printer but also from your computer by using Epson ScanSmart.*

Scanning Originals to a Memory Device

1. Place the originals.

   "Placing Originals" on page 35

2. Insert a memory device into the printer.

   "Inserting an External USB Device" on page 38

3. Select **Scan** > **Memory Device** on the control panel.

4. Make the scan settings.

   "Basic Menu Options for Scanning to a Memory Device" on page 98

   "Advanced Menu Options for Scanning to a Memory Device" on page 99

   Note:

   Select ☆ to save your settings as a preset.

5. Tap ◇.

Basic Menu Options for Scanning to a Memory Device

Note:
The items may not be available depending on other settings you made.

B&W/Color

Select whether to scan in monochrome or in color.

File Format:

Select the format in which to save the scanned image.

- Compression Ratio:

  Select how much to compress the scanned image.

- PDF Settings:

  When you have selected PDF as the save format setting, use these settings to protect PDF files.

  To create a PDF file that requires a password when opening, set Document Open Password. To create a PDF file that requires a password when printing or editing, set Permissions Password.

Resolution:

Select the scanning resolution.

2-Sided:

Scan both sides of the original.

❏ Orientation (Original):

Select the orientation of the original.

❏ Binding(Original):

Select the binding direction of the original.

Scan Area:

Select the scan area. To crop the white space around the text or image when scanning, select **Auto Cropping**. To scan at the maximum area of the scanner glass, select **Max Area**.

❏ Orientation (Original):

Select the orientation of the original.

Original Type:

Select the type of your original.

Advanced Menu Options for Scanning to a Memory Device

Note:
The items may not be available depending on other settings you made.

Orientation (Original):

Select the orientation of the original.

Density:

Select the contrast of the scanned image.

Remove Shadow:

Remove the shadows of the original that appear in the scanned image.

❏ Frame:

Remove the shadows at the edge of the original.

❏ Center:

Remove the shadows of the binding margin of the booklet.

Remove Punch Holes:

Remove the punch holes that appear in the scanned image. You can specify the area to erase the punch holes by entering a value in the box on the right.

❏ Erasing Position:

Select the position to remove the punch holes.

❏ Orientation (Original):

Select the orientation of the original.

File Name:

- ❏ Filename Prefix:
  Enter a prefix for the name of the images in alphanumeric characters and symbols.
- ❏ Add Date:
  Add the date to the file name.
- ❏ Add Time:
  Add the time to the file name.

Scanning Originals to the Cloud

Before using this feature, make settings using Epson Connect. See the following Epson Connect portal website for details.

https://www.epsonconnect.com/

http://www.epsonconnect.eu (Europe only)

1. Place the originals.
   "Placing Originals" on page 35
2. Select **Scan** > **Cloud** on the control panel.
3. Select ⊕ on the top of the screen, and then select a destination.
4. Make the scan settings.
   "Basic Menu Options for Scanning to the Cloud" on page 100

   "Advanced Menu Options for Scanning to the Cloud" on page 101

   Note:
   Select ☆ to save your settings as a preset.
5. Tap ◇.

Basic Menu Options for Scanning to the Cloud

Note:
The items may not be available depending on other settings you made.

B&W/Color

Select whether to scan in monochrome or in color.

File Format:

Select the format in which to save the scanned image.

2-Sided:

Scan both sides of the original.

❏ Orientation (Original):

Select the orientation of the original.

❏ Binding(Original):

Select the binding direction of the original.

Scan Area:

Select the scan area. To crop the white space around the text or image when scanning, select **Auto Cropping**. To scan at the maximum area of the scanner glass, select **Max Area**.

❏ Orientation (Original):

Select the orientation of the original.

Advanced Menu Options for Scanning to the Cloud

Note:
The items may not be available depending on other settings you made.

Original Type:

Select the type of your original.

Orientation (Original):

Select the orientation of the original.

Density:

Select the contrast of the scanned image.

Remove Shadow:

Remove the shadows of the original that appear in the scanned image.

❏ Frame:

Remove the shadows at the edge of the original.

❏ Center:

Remove the shadows of the binding margin of the booklet.

Remove Punch Holes:

Remove the punch holes that appear in the scanned image. You can specify the area to erase the punch holes by entering a value in the box on the right.

❏ Erasing Position:

Select the position to remove the punch holes.

❏ Orientation (Original):

Select the orientation of the original.

Scanning Using WSD

Note:

❏ *This feature is only available for computers running Windows 10/Windows 8.1/Windows 8/Windows 7/Windows Vista.*

❏ *If you are using Windows 7/Windows Vista, you need to setup your computer in advance using this feature.*
"Setting Up a WSD Port" on page 102

1. Place the originals.
"Placing Originals" on page 35

2. Select **Scan** > **WSD** on the control panel.

3. Select a computer.

4. Tap ⊡.

Setting Up a WSD Port

This section explains how to set up a WSD port for Windows 7/Windows Vista.

Note:
For Windows 10/Windows 8.1/Windows 8, the WSD port is set up automatically.

The following is necessary to set up a WSD port.

❏ The printer and the computer are connected to the network.

❏ The printer driver is installed on the computer.

1. Turn the printer on.

2. Click start, and then click **Network** on the computer.

3. Right-click the printer, and then click **Install**.
Click **Continue** when the **User Account Control** screen is displayed.

Click **Uninstall** and start again if the **Uninstall** screen is displayed.

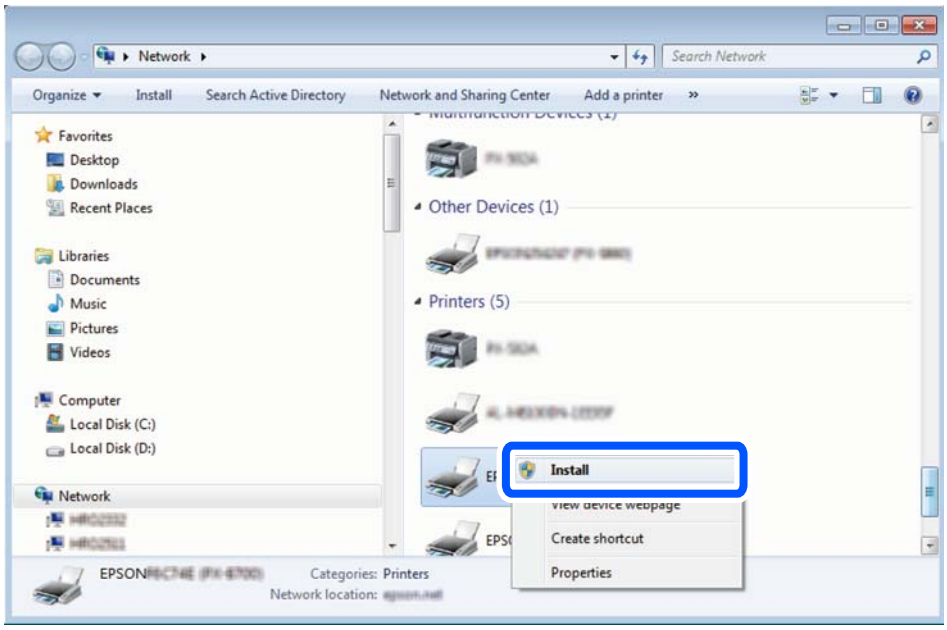

Note:
The printer name you set on the network and model name (EPSON XXXXXX (XX-XXXX)) are displayed on the network screen. You can check the printer's name set on the network from the printer's control panel or by printing a network status sheet.

4. Click **Your device is ready to use**.

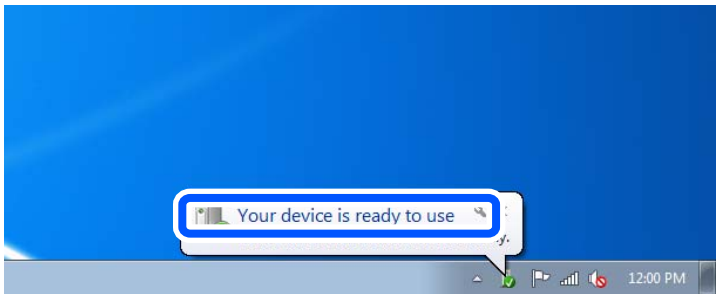

5. Check the message, and then click **Close**.

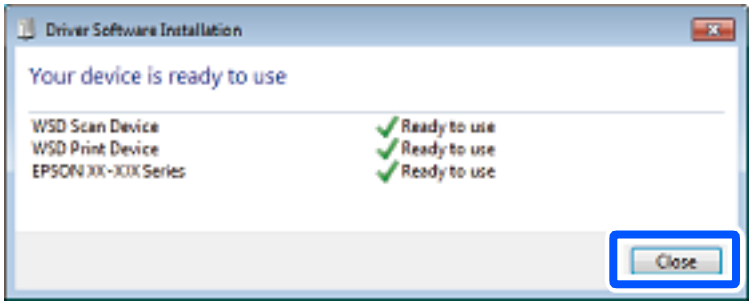

6. Open the **Devices and Printers** screen.

❏ Windows 7

Click start > **Control Panel** > **Hardware and Sound** (or **Hardware**) > **Devices and Printers**.

❏ Windows Vista

Click start > **Control Panel** > **Hardware and Sound** > **Printers**.

7. Check that an icon with the printer's name on the network is displayed.

   Select the printer name when using with WSD.

Scanning Originals to a Smart Device

Note:

❏ *Before scanning, install Epson iPrint on your smart device.*

❏ *Epson iPrint screens are subject to change without notice.*

❏ *Epson iPrint contents may vary depending on the product.*

1. Place the originals.

   "Placing Originals" on page 35

2. Start Epson iPrint.

3. Tap **Scan** on the home screen.

4. Tap **Scan**.

   Note:

   You can set the scan settings. Tap the ⚙ icon at the top-right of the screen.

   Scanning starts.

5. Check the scanned image, and then select the saving method.

   ❏ : Displays the screen where you can save the scanned images.

   ❏ : Displays the screen where you can send scanned images by email.

   ❏ : Displays the screen where you can print scanned images.

6. Finally, follow the on-screen instructions.

Faxing

Before Using Fax Features. 106

Overview of this Printer's Fax Features. 106

Sending Faxes Using the Printer. 111

Receiving Faxes on the Printer. 118

Menu Options for Faxing. 124

Menu Options for Fax Box. 128

Checking the Status or Logs for Fax Jobs. 134

Sending a Fax from a Computer. 137

Receiving Faxes on a Computer. 141

Before Using Fax Features

Check the following before you start using the fax features.

❏ The printer and the phone line, and (if necessary) the phone machine are connected correctly

❏ Fax basic settings (Fax Setting Wizard) is complete

❏ Other necessary Fax Settings are complete

See "Related Information" below to make settings.

Related Information

➡ "Connecting the Printer to a Phone Line" on page 385
➡ "Making the Printer Ready to Send and Receive Faxes" on page 388
➡ "Making Settings for the Printer's Fax Features According to Use" on page 390
➡ "Basic Settings" on page 309
➡ "Send Settings" on page 311
➡ "Setting a Shared Network Folder" on page 356
➡ "Configuring a Mail Server" on page 352
➡ "Making Contacts Available" on page 372
➡ "User Settings" on page 325

Overview of this Printer's Fax Features

Feature: Sending Faxes

Sending Methods

❏ Sending automatically

When you scan an original by tapping ◇ (**Send**), the printer dials the recipients and sends the fax.

"Sending Faxes Using the Printer" on page 111

❏ Sending manually

When you perform a manual check on the line connection by dialing the recipient, tap ◇ (**Send**) to start sending a fax directly.

"Sending Faxes Manually After Confirming the Recipient's Status" on page 113
"Sending Faxes Dialing from the External Phone Device" on page 113

Recipient Designation when Sending a Fax

You can enter recipients using **Keypad**, **Contacts**, and **Recent**.

"Recipient" on page 124
"Making Contacts Available" on page 372

Scan Settings when Sending a Fax

You can select items such as **Resolution** or **Original Size (Glass)** when sending faxes.

"Scan Settings:" on page 124

Using Fax Send Settings when Sending a Fax

You can use **Fax Send Settings** such as **Direct Send** (to send a large document stably) or **Backup** when normal sending fails. If you make settings to back up sent faxes when sending a fax but the backup fails, the printer can send an email notification automatically when the backup is performed.

"Fax Send Settings:" on page 125

"Backup Error Report:" on page 318

"Configuring a Mail Server" on page 352

Feature: Receiving Faxes

Receive Mode

There are two options in **Receive Mode** for receiving incoming faxes.

❏ Manual

Mainly for phoning, but also for faxing

"Usage of Manual Mode" on page 119

❏ Auto

- Only for faxing (external phone device is not required)
- Mainly for faxing, and sometimes phoning

"Usage of Auto Mode" on page 119

Receiving Faxes by Operating a Connected Phone

You can receive faxes by only operating an external phone device.

"Basic Settings" on page 309

"Making Settings When You Connect a Phone Device" on page 391

Destinations of Received Faxes

❏ Output without conditions: Received faxes are printed unconditionally by default. You can set up destinations for received faxes to the inbox, a computer, an external memory, emails, folders, or other faxes. If you save in the inbox, you can check the contents on the screen.

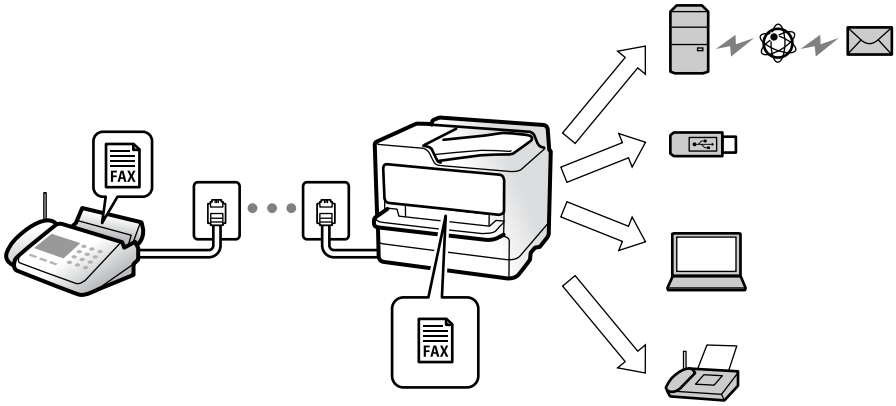

"Unconditional Save/Forward:" on page 312

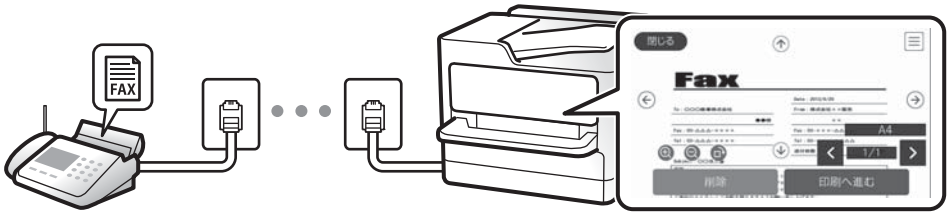

"Inbox settings:" on page 315

"Viewing Received Faxes on the Printer's LCD Screen" on page 123

❏ Output when conditions match: You can set up destinations for received faxes to the inbox or a confidential box, an external memory, an email, a folder, or another fax when specific conditions are met. If you save in the inbox or a confidential box, you can check the contents on the screen.

"Conditional Save/Forward:" on page 313

"Conditional Save/Forward list:" on page 127

Feature: PC-FAX Send/Receive (Windows/Mac OS)

PC-FAX Send

You can send faxes from a computer.

"PC to FAX Function:" on page 311

"Software for Faxing" on page 297

"Sending a Fax from a Computer" on page 137

PC-FAX Receive

You can receive faxes on a computer.

"Making Settings to Send and Receive Faxes on a Computer" on page 399

"Software for Faxing" on page 297

"Receiving Faxes on a Computer" on page 141

Features: Various Fax Reports

You can check the status of sent and received faxes in a report.

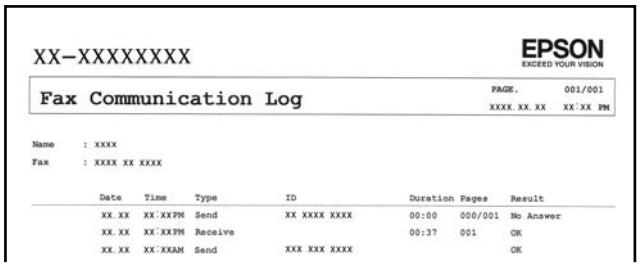

"Report Settings" on page 317

"Fax Send Settings:" on page 125

"Transmission Log:" on page 127

"Fax Report:" on page 127

Feature: Status or Logs for Fax Jobs

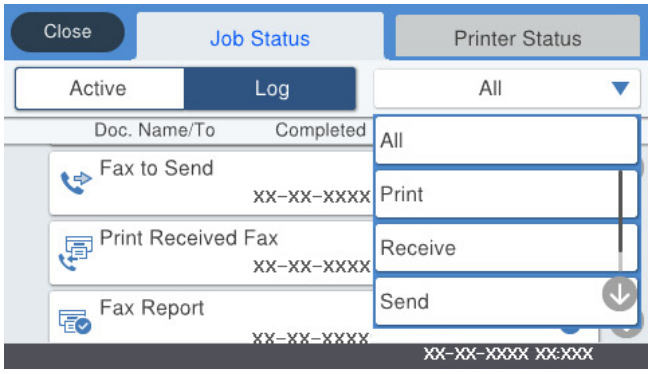

You can check the fax jobs in progress or check the job history.

"Checking the Status or Logs for Fax Jobs" on page 134

Feature: Fax Box

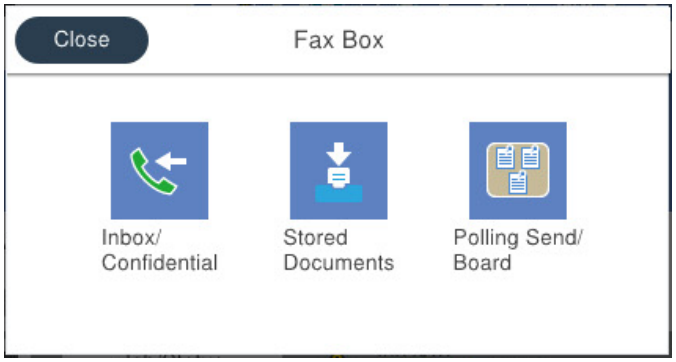

Inbox and confidential boxes

"Inbox/Confidential" on page 128

Stored Documents Box

"Stored Documents:" on page 130

Polling Send/Board Box

"Polling Send/Board" on page 131

Security for Fax Box feature

You can set a password for each box.

"Feature: Security when Sending and Receiving Faxes" on page 110

Feature: Security when Sending and Receiving Faxes

You can use many security features such as **Direct Dialing Restrictions** to prevent sending to the wrong destination, or **Backup Data Auto Clear** to prevent information leakage. You can set a password for each fax box in the printer.

"Security Settings" on page 318

"Inbox Password Settings:" on page 316

"Menu Options for Fax Box" on page 128

Features: Other Useful Features

Blocking Junk Faxes

"Rejection Fax:" on page 310

Receiving Faxes After Dialing

"Receiving Faxes by Making a Phone Call" on page 120

"Polling Receive:" on page 127

Regarding Sending Faxes

"Quick Operation Button 1, Quick Operation Button 2, Quick Operation Button 3:" on page 309

"Quick Operation Button:" on page 124

Sending Faxes Using the Printer

You can send faxes by entering fax numbers for recipients on the control panel.

Note:

- *When sending a fax in monochrome, you can preview the scanned image on the LCD screen before sending.*
- *You can reserve up to 50 monochrome fax jobs even while the phone line is in use for a voice call, sending another fax, or receiving a fax. You can check or cancel reserved fax jobs from **Job/Status** on the home screen.*

1. Place the originals.

   "Placing Originals" on page 35

   You can send up to 100 pages in one transmission; however depending on the remaining amount of memory, you may not be able to send faxes even with less than 100 pages.

2. Select **Fax** on the home screen.

3. Specify the recipient.

   "Selecting Recipients" on page 111

4. Select the **Fax Settings** tab, and then make settings as necessary.

   "Fax Settings" on page 124

5. Tap ◇ to send the fax .

   Note:

   - *If the fax number is busy or there is some problem, the printer automatically redials after one minute.*
   - *To cancel sending, tap ⊘.*
   - *It takes longer to send a fax in color because the printer performs scanning and sending simultaneously. While the printer is sending a fax in color, you cannot use the other features.*

Related Information

➡ "Checking Fax Jobs in Progress" on page 136

Selecting Recipients

You can specify recipients on the **Recipient** tab to send the fax using the following methods.

Entering Fax Number Manually

Select **Keypad**, enter a fax number on the screen displayed, and then tap **OK**.

- To add a pause (pause for three seconds during dialing), enter a hyphen(-).

- If you have set an external access code in **Line Type**, enter "#" (hash) instead of the actual external access code at the beginning of the fax number.

Note:
*If you cannot manually enter a fax number, **Direct Dialing Restrictions** in **Security Settings** is set to **On**. Select fax recipients from the contacts list or the sent fax history.*

Selecting recipients from the contacts list

Select **Contacts** and select recipients you want to send. If the recipient you want to send to has not been registered in **Contacts** yet, tap to register it.

Selecting recipients from the sent fax history

Select **Recent**, and then select a recipient.

Selecting recipients from the list on the Recipient tab

Select a recipient from the list registered in **Settings** > **Contacts Manager** > **Frequent**.

Note:
*To delete recipients you entered, display the list of recipients by tapping on the field of a fax number or the number of recipients on the LCD screen, select the recipient from the list, and then select **Remove**.*

Related Information

➡ "Making Contacts Available" on page 372

Various Ways of Sending Faxes

Sending the Fax after Checking the Scanned Image

You can preview the scanned image on the LCD screen before sending the fax. (Monochrome faxes only)

1. Place the originals.

   "Placing Originals" on page 35

2. Select **Fax** on the home screen.

3. Specify the recipient.

   "Selecting Recipients" on page 111

4. Select the **Fax Settings** tab, and then make settings as necessary.

   "Fax Settings" on page 124

5. Tap , check the scanned document image.

   - : Moves the screen in the direction of the arrows.
   - : Reduces or enlarges.

- < > : Moves to the previous or the next page.

Note:
❏ *When **Direct Send** is enabled, you cannot preview.*

❏ *When the preview screen is left untouched for the time set in **Settings** > **General Settings** > **Fax Settings** > **Send Settings** > **Fax Preview Display Time**, the fax is sent automatically.*

6. Select **Start Sending**. Otherwise, select **Cancel**

Note:
The image quality of a sent fax may be different from what you previewed depending on the capability of the recipient machine.

Sending Faxes Manually After Confirming the Recipient's Status

You can send a fax while listening to sounds or voices through the printer's speaker while dialing, communicating, and transmitting.

1. Select **Fax** on the home screen.

2. Make necessary settings on the **Fax Settings** tab.

3. On the **Recipient** tab, tap and then specify the recipient.

Note:
You can adjust the sound volume of the speaker.

4. When you hear a fax tone, select **Send/Receive** at the upper right corner of the LCD screen, and then select **Send**.

Note:
When receiving a fax from a fax information service, and you hear the audio guidance, follow the guidance to make the printer operations.

5. Tap ◇ to send the fax.

Related Information

➡ "Fax Settings" on page 124

Sending Faxes Dialing from the External Phone Device

You can send a fax by dialing using the connected telephone when you want to talk over the phone before sending a fax, or when the recipient's fax machine does not switch to the fax automatically.

1. Pick up the handset of the connected telephone, and then dial the recipient's fax number using the phone.

Note:
When the recipient answers the phone, you can talk with the recipient.

2. Select **Fax** on the home screen.

3. Make necessary settings on the**Fax Settings**.

   "Fax Settings" on page 124

4. When you hear a fax tone, tap ◇, and then hang up the handset.

   Note:
   When a number is dialed using the connected telephone, it takes longer to send a fax because the printer performs scanning and sending simultaneously. While sending the fax, you cannot use the other features.

Sending Faxes on Demand (Using Polling Send/Bulletin Board Box)

If you store a monochrome document in the printer in advance, the stored document can be sent upon request from another fax machine that has a polling receive feature. There is one Polling Send box and 10 bulletin board boxes in the printer for this feature. In each box, you can store one document with up to 100 pages. To use a bulletin board box, the one box to store a document must be registered beforehand, and the fax machine of the recipient must support the subaddress/password feature.

Related Information

➡ "Setting the Polling Send Box" on page 114
➡ "Registering a Bulletin Board Box" on page 114
➡ "Storing a Document in the Polling Send/Bulletin Board Box" on page 115

Setting the Polling Send Box

You can store a document in the **Polling Send Box** without registering. Make the following settings as necessary.

1. Select **Fax Box** > **Polling Send/Board** from the home screen.

2. Select **Polling Send**, tap Menu, and then select **Settings**.

   Note:
   If a password entry screen is displayed, enter the password.

3. Make the appropriate settings, such as **Notify Send Result**.

   Note:
   *If you set a password in **Box Open Password**, you will be asked to enter the password from the next time you open the box.*

4. Select **OK** to apply the settings.

Related Information

➡ "Polling Send:" on page 131

Registering a Bulletin Board Box

You must register a bulletin board box for storing a document beforehand. Follow the steps below to register the box.

1. Select **Fax Box** > **Polling Send/Board** from the home screen.

2. Select one of the boxes named **Unregistered Bulletin Board**.

   Note:
   If a password entry screen is displayed, enter the password.

3. Make settings for the items on the screen.

   ❏ Enter a name in **Name (Required)**

   ❏ Enter a subaddress in **Subaddress(SEP)**

   ❏ Enter a password in **Password(PWD)**

4. Make the appropriate settings such as **Notify Send Result**.

   Note:
   *If you set a password in **Box Open Password**, you will be asked to enter the password from the next time you open the box.*

5. Select **OK** to apply the settings.

To display the screen for changing settings or deleting registered boxes, select the box you want to change/delete, and then tap Menu.

Related Information

➡ "Unregistered Bulletin Board:" on page 132

Storing a Document in the Polling Send/Bulletin Board Box

1. Select **Fax Box** on the home screen, and then select **Polling Send/Board**.

2. Select **Polling Send** or one of the bulletin board boxes that have already been registered.

   If the password entry screen is displayed, enter the password to open the box.

3. Tap **Add Document**.

4. On the fax top screen that is displayed, check the fax settings, and then tap ◇ to scan and store the document.

To check the document you stored, select **Fax Box** > **Polling Send/Board**, select the box containing the document you want to check, and then tap **Check Document**. On the screen that is displayed, you can view, print or delete the scanned document.

Related Information

➡ "Each Registered Bulletin Board" on page 133

Sending Many Pages of a Monochrome Document (Direct Send)

When sending a fax in monochrome, the scanned document is temporarily stored in the printer's memory. Therefore, sending a lot of pages may cause the printer to run out of memory and stop sending the fax. You can avoid this by enabling the **Direct Send** feature, however, it takes longer to send the fax because the printer performs scanning and sending simultaneously. You can use this feature when there is only one recipient.

Accessing the Menu

You can find the menu on the printer's control panel below.

Fax > **Fax Settings** > **Direct Send**.

Sending a Fax Preferentially (Priority Send)

You can send an urgent document ahead of the other faxes waiting to be sent.

Note:
You cannot send your document preferentially while one of the following is in progress because the printer cannot accept another fax.

- *Sending a monochrome fax with **Direct Send** enabled*
- *Sending a color fax*
- *Sending a fax using a connected telephone*
- *Sending a fax sent from the computer (except when sending from memory)*

Accessing the Menu

You can find the menu on the printer's control panel below.

Fax > **Fax SettingsPriority Send**.

Related Information

➡ "Checking the Status or Logs for Fax Jobs" on page 134

Sending Faxes in Monochrome at Specified Time of the Day (Send Fax Later)

You can set to send a fax at a specified time. Only monochrome faxes can be sent when the time to send is specified.

Accessing the Menu

You can find the menu on the printer's control panel below.

Fax > **Fax Settings**

Enable **Send Fax Later**, and then specify the time of day to send the fax.

Note:
*To cancel the fax while the printer is waiting for the specified time to arrive, cancel it from **Job/Status** on the home screen.*

Related Information

➡ "Checking the Status or Logs for Fax Jobs" on page 134

Sending Different Size Documents Using ADF (Continuous Scan(ADF))

Sending faxes by placing originals one by one, or by placing originals by size, you can send them as one document at their original sizes.

If you place different sized originals in the ADF, all of the originals are sent at the largest size among them. To send originals at their original sizes, do not place originals with mixed sizes.

1. Place the first batch of originals at the same size.
2. Select **Fax** on the home screen.
3. Specify the recipient.
4. Select the **Fax Settings** tab, and then tap **Continuous Scan(ADF)** to set this to **On**.

   You can also make settings such as the resolution and the sending method as necessary.
5. Tap ⊡ (**Send**).
6. When scanning the first set of originals is complete and a message is displayed on the control panel asking you to scan the next set of originals, set the next originals, and then select **Start Scanning**.

   Note:
   *If you leave the printer untouched for the time set in **Wait Time for Next Original** after you have been prompted to set the next originals, the printer stops storing and starts sending the document.*

Sending a Fax with a Subaddress(SUB) and Password(SID)

You can send faxes to the confidential boxes or the relay boxes in the recipient's fax machine when the recipient's fax machine has the feature to receive confidential faxes or relay faxes. The recipients can receive them securely, or can forward them to specified fax destinations.

1. Place the originals.
2. Select **Fax** on the home screen.
3. Select **Contacts** and select a recipient with a registered subaddress and password.

   You can also select the recipient from **Recent** if it was sent with a subaddress and password.
4. Select the **Fax Settings** tab, and then make settings such as the resolution and the sending method as necessary.
5. Send the fax.

Related Information

➡ "Making Contacts Available" on page 372

Sending the Same Documents Multiple Times

Related Information

➡ "Storing a Fax Without Specifying a Recipient (Store Fax Data)" on page 118
➡ "Sending Faxes Using the Stored Document Feature" on page 118

Storing a Fax Without Specifying a Recipient (Store Fax Data)

Since you can send faxes using documents stored in the printer, you can save the time spent scanning documents when you need to send the same document frequently. You can store up to 100 pages of a single document in monochrome. You can store 10 documents in the printer's stored documents box.

Note:
Saving 10 documents may not be possible depending on the usage conditions such as the file size of stored documents.

1. Place the originals.
2. Select **Fax Box** on the home screen.
3. Select **Stored Documents**, tap (Box Menu), and then select **Store Fax Data**.
4. In the **Fax Settings** tab that is displayed, make settings such as the resolution as necessary.
5. Tap to store the document.

After storing a document is complete, you can preview the scanned image by selecting **Fax Box** > **Stored Documents** and then tapping the box for the document, or you can delete it by tapping on the right of the box for the document.

Related Information

➡ "Stored Documents:" on page 130

Sending Faxes Using the Stored Document Feature

1. Select **Fax Box** on the home screen, and then select **Stored Documents**.
2. Select the document you want to send, check the content of the document, and then select **Start Sending**.

   When the message **Delete this document after sending?** is displayed, select **Yes** or **No**.
3. Specify the recipient.
4. Select the **Fax Settings** tab, and then make settings such as the sending method as necessary.
5. Tap to send the fax.

Related Information

➡ "Stored Documents:" on page 130
➡ "Checking the Status or Logs for Fax Jobs" on page 134

Receiving Faxes on the Printer

If the printer is connected to the phone line and basic settings have been completed using the Fax Setting Wizard, you can receive faxes.

You can save received faxes, check them on the printer screen, and forward them.

Received faxes are printed in the printer's initial settings.

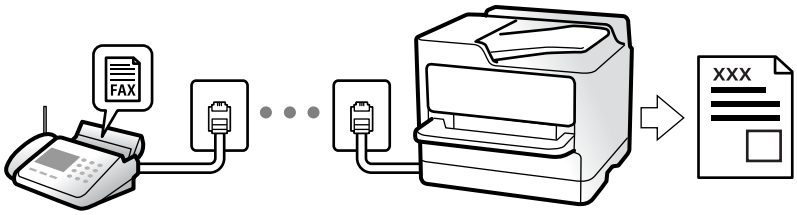

When you want to check the status of the fax settings, print a **Fax Settings List** by selecting **Fax** > (More) > **Fax Report** > **Fax Settings List**.

Receiving Incoming Faxes

There are two options in **Receive Mode**.

Related Information

➡ "Usage of Manual Mode" on page 119
➡ "Usage of Auto Mode" on page 119

Usage of Manual Mode

This mode is mainly for making phone calls, but is also for faxing.

Receiving Faxes

When the telephone rings, you can answer the ringing manually by picking up the handset.

❏ When you hear a fax signal (baud):

Select **Fax** on the printer's home screen, select **Send/Receive** > **Receive**, and then tap ⟐. Next, hang up the handset.

❏ If the ringing is for a voice call:

You can answer the phone as normal.

Receiving Faxes Using only the Connected Telephone

When **Remote Receive** is set, you can receive faxes by simply entering the **Start Code**.

When the telephone rings, pick up the handset. When you hear a fax tone (baud), dial the two digit **Start Code**, and then hang up the handset. If you do not know the start code, ask the administrator.

Related Information

➡ "Remote Receive:" on page 310

Usage of Auto Mode

This mode allows you to use the line for the following uses.

❏ Using the line for faxing only (external telephone is not necessary)

❏ Using the line for faxing mainly, and sometimes phoning

Receiving Faxes Without an External Phone Device

The printer automatically switches to receive faxes when the number of rings you set in **Rings to Answer** is complete.

Receiving Faxes With an External Phone Device

A printer with an external phone device works as follows.

❏ When the answering machine answers within the number of rings set in **Rings to Answer**:

- If the ringing is for a fax: The printer automatically switches to receive faxes.
- If the ringing is for a voice call; The answering machine can receive voice calls and record voice messages.

❏ When you pick up the handset within the number of rings set in **Rings to Answer**:

- If the ringing is for a fax: Hold the line until the printer automatically starts receiving the fax. Once the printer starts receiving the fax, you can hang up the handset. To start receiving the fax immediately, use the same steps as for **Manual**. You can receive the fax using the same steps as for **Manual**. Select **Fax** on the home screen, and then select **Send/Receive** > **Receive**. Next, tap ⊡, and then hang up the handset.
- If the ringing is for a voice call: You can answer the phone as normal.

❏ When the ringing stops and the printer automatically switches to receive faxes:

- If the ringing is for a fax: The printer starts receiving faxes.
- If the ringing is for a voice call: You cannot answer the phone. Ask the person to call you back.

Note:
*Set the number of rings to answer for the answering machine to a lower number than the number set in **Rings to Answer**. Otherwise, the answering machine cannot receive voice calls to record voice messages. For details on setting up the answering machine, see the manual supplied with the answering machine.*

Receiving Faxes by Making a Phone Call

You can receive a fax stored on another fax machine by dialing the fax number.

Related Information

➡ "Receiving Faxes After Confirming the Sender's Status" on page 120
➡ "Receiving Faxes by Polling (Polling Receive)" on page 121
➡ "Receiving Faxes from a Board with a Subaddress (SEP) and Password (PWD) (Polling Receive)" on page 121

Receiving Faxes After Confirming the Sender's Status

You can receive a fax while listening to sounds or voices through the printer's speaker while dialing, communicating, and transmitting. You can use this feature when you want to receive a fax from a fax information service by following an audio guide.

1. Select **Fax** on the home screen.

2. Tap , and then specify the sender.

   Note:
   You can adjust the sound volume of the speaker.

3. Wait until the sender answers your call. When you hear a fax tone, select **Send/Receive** at the upper right corner of the LCD screen, and then select **Receive**.

   Note:
   When receiving a fax from a fax information service, and you hear the audio guidance, follow the guidance to make the printer operations.

4. Tap ◇.

Receiving Faxes by Polling (Polling Receive)

You can receive a fax stored on another fax machine by dialing the fax number. Use this feature to receive a document from a fax information service.

Note:
- ❏ *If the fax information service has an audio guidance feature that you need to follow to receive a document, you cannot use this feature.*
- ❏ *To receive a document from a fax information service that uses audio guidance, just dial the fax number using the **On Hook** feature or the connected telephone, and operate the phone and the printer following the audio guidance.*

1. Select **Fax** on the home screen.

2. Tap (More).

3. Select **Extended Fax**.

4. Tap the **Polling Receive** box to set this to **On**.

5. Tap **Close**, and then tap **Close** again.

6. Enter the fax number.

   Note:
   *If you cannot manually enter a fax number, **Direct Dialing Restrictions** in **Security Settings** is set to **On**. Select fax recipients from the contacts list or the sent fax history.*

7. Tap ◇.

Receiving Faxes from a Board with a Subaddress (SEP) and Password (PWD) (Polling Receive)

By dialing to a sender, you can receive faxes from a board stored on sender's fax machine with a subaddress (SEP) and password (PWD) feature. To use this feature, register the contact with the subaddress (SEP) and password (PWD) in the contacts list in advance.

1. Select **Fax** on the home screen.

2. Select (More).
3. Select **Extended Fax**.
4. Tap **Polling Receive** to set this to **On**.
5. Tap **Close**, and then tap **Close** again.
6. Select **Contacts**, and then select the contact with the registered subaddress (SEP) and password (PWD) to match the destination board.
7. Tap .

Related Information

➡ "Making Contacts Available" on page 372

Saving and Forwarding Received Faxes

Summary of the Features

If your organization has a printer administrator, contact your administrator to check the status of the printer settings.

Saving Received Faxes in the Printer

The received faxes can be saved in the printer, and you can view them on the printer's screen. You can print only the faxes you want to print or delete unnecessary faxes.

Saving and/or Forwarding Received Faxes to Destinations Other than the Printer

The following can be set as destinations.

- ❏ Computer (PC-FAX reception)
- ❏ External memory device
- ❏ Email address
- ❏ Shared folder on a network
- ❏ Another fax machine

Note:

- ❏ *The fax data is saved as PDF format.*
- ❏ *Color documents cannot be forwarded to another fax machine. They are processed as documents that failed to be forwarded.*

Sorting Received Faxes by Conditions such as Subaddress and Password

You can sort and save received faxes to your Inbox or bulletin board boxes. You can also forward received faxes to destinations other than the printer.

- ❏ Email address

❏ Shared folder on a network

❏ Another fax machine

Note:

❏ *The fax data is saved as PDF format.*

❏ *Color documents cannot be forwarded to another fax machine. They are processed as documents that failed to be forwarded.*

❏ *You can print the save/forward conditions set in the printer. Select **Fax** on the home screen, and then select (More) > **Fax Report** > **Conditional Save/Forward list**.*

❏ *If your organization has a printer administrator, contact the administrator to set or change the save/forward conditions.*

For the administrator, see "Related Information" below to check or change settings.

Related Information

➡ "Making Settings to Save and Forward Received Faxes" on page 392

➡ "Making Settings to Save and Forward Received Faxes with Specific Conditions" on page 395

➡ "Viewing Received Faxes on the Printer's LCD Screen" on page 123

Viewing Received Faxes on the Printer's LCD Screen

To view received faxes on the printer's screen, you must make settings on the printer in advance.

"Making Saving Settings to Receive Faxes" on page 392

1. Select **Fax Box** on the home screen.

   Note:

   When there are received faxes that have not been read, the number of unread documents is displayed on the on the home screen.

2. Select **Inbox/Confidential**.

3. Select the inbox or the confidential box you want to view.

4. If the inbox, or the confidential box has been password protected, enter the inbox password, the confidential box password, or the administrator password.

5. Select the fax you want to view from the list.

   The contents of the fax are displayed.

   ❏ : Rotates the image to the right by 90 degrees.

   ❏ : Moves the screen in the direction of the arrows.

   ❏ : Reduces or enlarges.

   ❏ : Moves to the previous or the next page.

   ❏ : Displays menus such as save and forward.

   ❏ To hide the operation icons, tap anywhere on the preview screen except for the icons. Tap again to display the icons.

6. Select whether to print or delete the document you have viewed, and then follow the on-screen instructions.

> ***Important:***
> *If the printer runs out of memory, receiving and sending faxes is disabled. Delete documents that you have already read or printed.*

Related Information

➡ "Inbox/Confidential" on page 128

Menu Options for Faxing

Recipient

Select the menus on the control panel as described below.

Fax > **Recipient**

Keypad:

Manually enter a fax number.

Contacts:

Select a recipient from the contacts list. You can also add or edit a contact.

Recent:

Select a recipient from the sent fax history. You can also add the recipient to the contacts list.

Related Information

➡ "Selecting Recipients" on page 111

Fax Settings

Select the menus on the control panel as described below.

Fax > **Fax Settings**

Quick Operation Button:

Assigning up to three frequently used items such as **Transmission Log** and **Original Type** in **Settings** > **General Settings** > **Fax Settings** > **Quick Operation Button**, displays the items at the top of the **Fax Settings** tab.

Scan Settings:

Resolution:

Select the resolution of the outgoing fax. If you select a higher resolution, the data size becomes larger and it takes time to send the fax.

Density:

Sets the density of the outgoing fax. + makes the density darker, and - makes it lighter.

Original Type:

Select the type of your original.

Remove Background:

Detects the paper color (background color) of the original document, and removes or lightens the color. Depending on the darkness and vividness of the color, it may not be removed or lightened

Sharpness:

Enhances or defocuses the outline of the image. + enhances the sharpness, and - defocuses the sharpness.

ADF 2-Sided:

Scans both sides of originals placed in the ADF and sends a monochrome fax.

Continuous Scan(ADF):

Sending faxes by placing originals one by one, or by placing originals by size, you can send them as one document at their original sizes. See the related information below on this topic.

Original Size (Glass):

Select the size and orientation of the original you placed on the scanner glass.

Color Mode:

Select whether to scan in color or in monochrome.

Fax Send Settings:

Direct Send:

Sends a monochrome fax while scanning the originals. Since scanned originals are not stored temporarily in the printer's memory even when sending a large volume of pages, you can avoid printer errors due to a lack of memory. Note that sending using this feature takes longer than not using this feature. See the related information below on this topic.

You cannot use this feature when:

- ❏ Sending a fax using the **ADF 2-Sided** option
- ❏ Sending a fax to multiple recipients

Priority Send:

Sends the current fax before other faxes waiting to be sent. See the related information below on this topic.

Send Fax Later:

Sends a fax at a time you specified. Only a monochrome fax is available when using this option. See the related information below on this topic.

Add Sender Information:

❏ Add Sender Information

Select the position where you want to include the header information (sender name and fax number) in the outgoing fax, or not to include the information.

- **Off**: Sends a fax with no header information.

- **Outside of Image**: Sends a fax with header information in the top white margin of the fax. This keeps the header from overlapping with the scanned image, however, the fax received by the recipient may be printed across two sheets depending on the size of the originals.

- **Inside of Image**: Sends a fax with header information approximately 7 mm lower than the top of the scanned image. The header may overlap with the image, however, the fax received by the recipient will not be split into two documents.

❏ Fax Header

Select the header for the recipient. To use this feature, you should register multiple headers in advance.

❏ Additional Information

Select the information you want to add. You can select one from **Your Phone Number** and **Destination List**.

Notify Send Result:

Sends a notification after you send a fax.

Transmission Report:

Prints a transmission report after you send the fax.

Print on Error prints a report only when an error occurs.

When **Attach Fax image to report** has been set in **Settings** > **General Settings** > **Fax Settings** > **Report Settings**, faxes with errors are also printed with the report.

Backup:

Saves a backup of the sent fax that is scanned and saved to the printer's memory automatically. The backup feature is available when:

❏ Sending a fax in monochrome

❏ Sending a fax using the **Send Fax Later** feature

❏ Sending a fax using the **Batch Send** feature

❏ Sending a fax using the **Store Fax Data** feature

Related Information

➡ "Sending Different Size Documents Using ADF (Continuous Scan(ADF))" on page 116
➡ "Sending Many Pages of a Monochrome Document (Direct Send)" on page 115
➡ "Sending a Fax Preferentially (Priority Send)" on page 116
➡ "Sending Faxes in Monochrome at Specified Time of the Day (Send Fax Later)" on page 116

More

Selecting in **Fax** on the home screen displays the **More** menu.

Transmission Log:

You can check the history of sent or received fax jobs.

Note that you can also check the history of sent or received fax jobs from **Job/Status**.

Fax Report:

Last Transmission:

Prints a report for the previous fax that was sent or received through polling.

Fax Log:

Prints a transmission report. You can set to print this report automatically using the following menu.

Settings > **General Settings** > **Fax Settings** > **Report Settings** > **Fax Log Auto Print**

Stored Fax Documents:

Prints a list of fax documents stored in the printer's memory, such as unfinished jobs.

Fax Settings List:

Prints the current fax settings.

Conditional Save/Forward list:

Prints the Conditional Save/Forward List.

Protocol Trace:

Prints a detailed report for the previous fax that was sent or received.

Extended Fax:

Polling Receive:

When this is set to **On** and you call the sender's fax number, you can receive documents from the sender's fax machine. See the related information below for details on how to receive faxes using **Polling Receive**.

When you leave the Fax menu, the setting returns to **Off** (default).

Polling Send/Board:

When this is set to **On** by selecting the polling send box or a bulletin board box, you can scan and store documents to the box you selected by tapping ◇ on the **Fax Settings** tab.

You can store one document to the polling send box. You can store up to 10 documents to up to 10 bulletin boards in the printer, but you must register them from **Fax Box** before storing documents. See the related information below for details on how to register a bulletin board box.

When you leave the Fax menu, the setting returns to **Off** (default).

Store Fax Data:

When this is set to **On**, and you tap ◇ on the **Fax Settings** tab, you can scan and store documents to the **Stored Documents** box. You can store up to 10 documents.

You can also scan and save documents to the **Stored Documents** box from **Fax Box**. See the related information below for details on how to store documents from **Fax Box**

When you leave the Fax menu, the setting returns to **Off** (default).

Fax Box:

Accesses the **Fax Box** on the home screen.

Fax Settings:

Accesses **Settings** > **General Settings** > **Fax Settings**. Access the setting menu as an administrator.

Related Information

- ➡ "Receiving Faxes by Polling (Polling Receive)" on page 121
- ➡ "Setting the Polling Send Box" on page 114
- ➡ "Registering a Bulletin Board Box" on page 114
- ➡ "Storing a Document in the Polling Send/Bulletin Board Box" on page 115
- ➡ "Polling Send/Board" on page 131
- ➡ "Storing a Fax Without Specifying a Recipient (Store Fax Data)" on page 118
- ➡ "Stored Documents:" on page 130
- ➡ "Checking the Status or Logs for Fax Jobs" on page 134
- ➡ "Checking the Fax Job History" on page 136

Menu Options for Fax Box

Inbox/Confidential

You can find **Inbox/Confidential** in **Fax Box** on the home screen.

Inbox and Confidential Boxes (List)

Inbox and confidential boxes are in **Fax Box** > **Inbox/Confidential**.

You can save up to 100 documents in the inbox and the confidential box in total.

You can use one Inbox and register up to 10 confidential boxes. The box name is displayed on the box. **Confidential XX** is the default name for each confidential box.

Inbox and Confidential Boxes

Displays the received faxes list by date received, sender name, and pages.

Tapping one of the faxes from the list opens the preview screen, and you can check the contents of the fax. You can print or delete the fax while you are previewing.

preview screen

- ❏ : Reduces or enlarges.
- ❏ : Rotates the image to the right by 90 degrees.
- ❏ : Moves the screen in the direction of the arrows.

❏ < > : Moves to the previous or the next page.

To hide the operation icons, tap anywhere on the preview screen except for the icons. Tap again to display the icons.

(Preview menu)

❏ Save to Memory Device

❏ Forward(Email)

❏ Forward(Network Folder)

❏ Send Fax

❏ Details

When the message **Delete When Complete** is displayed, select **On** to delete faxes after completing processes such as **Save to Memory Device** or **Forward(Email)**.

(Box Menu)

Print All:

This is displayed only when there are stored faxes in the box. Prints all faxes in the box. Selecting **On** in **Delete When Complete** deletes all faxes when printing is complete.

Save All to Memory Device:

This is displayed only when there are stored faxes in the box. Saves all faxes to external memory devices in the box. Selecting **On** in **Delete When Complete** deletes all documents when saving is complete.

Delete All:

This is displayed only when there are stored faxes in the box. Deletes all faxes in the box.

Settings:

The following items are displayed when you select **Inbox** > **Box Menu** > **Settings**.

❏ Options when memory is full: Select one option to print or to decline incoming faxes after the Inbox is full.

❏ Inbox Password Settings: You can set a password or change it.

The following items are displayed when you select a confidential box and select **Box Menu** > **Settings**.

❏ Name: Enter a name for the confidential box.

❏ Box Open Password: You can set a password or change it.

Delete Box:

This item is displayed only when you select a confidential box and select **Box Menu**. Clears the current settings for Confidential Boxes and deletes all stored documents.

Related Information

➡ "Checking the Fax Job History" on page 136

Stored Documents:

You can find **Stored Documents** in **Fax Box** on the home screen.

You can store up to 100 pages of a single document in monochrome, and up to 10 documents in the box. This allows you to save time spent scanning documents when you need to send the same document frequently.

Note:
You may not be able to save 10 documents depending on the usage conditions such as the size of saved documents.

Stored Documents Box

Displays the stored documents list with stored dates and pages.

Tapping one of the stored documents from the list displays the preview screen. Tap **Start Sending** to go to the fax sending screen, or tap **Delete** to delete the document while you are previewing.

preview screen

- ❏ : Reduces or enlarges.
- ❏ : Rotates the image to the right by 90 degrees.
- ❏ : Moves the screen in the direction of the arrows.
- ❏ : Moves to the previous or the next page.

To hide the operation icons, tap anywhere on the preview screen except for the icons. Tap again to display the icons.

(Preview menu)

- ❏ Save to Memory Device
- ❏ Forward(Email)
- ❏ Forward(Network Folder)
- ❏ Print

When the message **Delete When Complete** is displayed, select **On** to delete faxes after completing processes such as **Save to Memory Device** or **Forward(Email)**.

(Box Menu)

Store Fax Data:

Displays the screen for the **Fax** > **Fax Settings** tab. Tapping on the screen starts scanning documents to store to the Stored Documents Box.

Print All:

This is displayed only when there are stored faxes in the box. Prints all faxes in the box. Selecting **On** in **Delete When Complete** deletes all faxes when printing is complete.

Save All to Memory Device:

This is displayed only when there are stored faxes in the box. Saves all faxes to external memory devices in the box. Selecting **On** in **Delete When Complete** deletes all documents when saving is complete.

Delete All:

This is displayed only when there are stored faxes in the box. Deletes all faxes in the box.

Settings:

Box Open Password: You can set a password or change it.

Related Information

➡ "Sending the Same Documents Multiple Times" on page 117
➡ "Checking the Fax Job History" on page 136

Polling Send/Board

You can find **Polling Send/Board** in **Fax Box** on the home screen.

There is a Polling Send Box and 10 bulletin boards. You can store up to 100 pages of a single document in monochrome, and one document in each box.

Related Information

➡ "Sending Faxes on Demand (Using Polling Send/Bulletin Board Box)" on page 114

Polling Send:

You can find **Polling Send** in **Fax Box** > **Polling Send/Board**.

Polling Send Box:

Displays the setting items and values in **Settings** in (Menu).

Add Document:

Displays the screen for the **Fax** > **Fax Settings** tab. Tapping on the screen starts scanning documents to store them in the box.

When a document is in the box, **Check Document** is displayed instead.

Check Document:

Displays the preview screen when a document is in the box. You can print or delete the document while you are previewing.

preview screen

- : Reduces or enlarges.
- : Rotates the image to the right by 90 degrees.
- : Moves the screen in the direction of the arrows.
- : Moves to the previous or the next page.

To hide the operation icons, tap anywhere on the preview screen except for the icons. Tap again to display the icons.

(Preview menu)

- ❏ Save to Memory Device
- ❏ Forward(Email)
- ❏ Forward(Network Folder)
- ❏ Send Fax

When the message **Delete When Complete** is displayed, select **On** to delete faxes after completing processes such as **Save to Memory Device** or **Forward(Email)**.

(Menu)

Delete Document:

This item is displayed only when there is a stored document in the box. Deletes the document stored in the box.

Settings:

- ❏ Box Open Password: You can set a password or change it.
- ❏ Delete Document After Sending: Setting this to **On** deletes the document in the box when the next request from a recipient to send the document (Polling Send) is completed.
- ❏ Notify Send Result: When **Email Notifications** is set to **On**, the printer sends a notification to the destination specified in **Recipient** when a request to send the document (Polling Send) is completed.

Related Information

➡ "Checking the Fax Job History" on page 136

Unregistered Bulletin Board:

You can find **Unregistered Bulletin Board** in **Fax Box** > **Polling Send/Board**. Select one of the **Unregistered Bulletin Board** boxes. After registering a board, the registered name is displayed on the box instead of **Unregistered Bulletin Board**.

You can register up to 10 bulletin boards.

Bulletin Board Box Settings:

Name (Required):

Enter a name for the bulletin board box.

Subaddress(SEP):

Make or change the conditions for a recipient to receive the fax.

Password(PWD):

Make or change the conditions for a recipient to receive the fax.

Box Open Password:

Set or change the password used to open the box.

Delete Document After Sending:

Setting this to **On** deletes the document in the box when the next request from a recipient to send the document (Polling Send) is completed.

Notify Send Result:

When **Email Notifications** is set to **On**, the printer sends a notification to the **Recipient** when a request to send the document (Polling Send) is completed.

Related Information

➡ "Each Registered Bulletin Board" on page 133

Each Registered Bulletin Board

You can find bulletin boards in **Fax Box** > **Polling Send/Board**. Select the box for which the registered name is displayed. The name displayed on the box is the name registered in **Unregistered Bulletin Board**.

You can register up to 10 bulletin boards.

(Registered Bulletin Board Name)

Displays the setting values of the items in **Settings** in (Menu).

Add Document:

Displays the screen for the **Fax** > **Fax Settings** tab. Tapping on the screen starts scanning documents to store them in the box.

When a document is in the box, **Check Document** is displayed instead.

Check Document:

Displays the preview screen when a document is in the box. You can print or delete the document while you are previewing.

preview screen

- : Reduces or enlarges.
- : Rotates the image to the right by 90 degrees.
- : Moves the screen in the direction of the arrows.
- : Moves to the previous or the next page.

To hide the operation icons, tap anywhere on the preview screen except for the icons. Tap again to display the icons.

(Preview menu)

- Save to Memory Device
- Forward(Email)
- Forward(Network Folder)
- Send Fax

When the message **Delete When Complete** is displayed, select **On** to delete faxes after completing processes such as **Save to Memory Device** or **Forward(Email)**.

(Menu)

Delete Document:

This item is displayed only when there is a stored document in the box. Deletes the document stored in the box.

Settings:

- ❏ Box Open Password: You can set a password or change it.
- ❏ Delete Document After Sending: Setting this to **On** deletes the document in the box when the next request from a recipient to send the document (Polling Send) is completed.
- ❏ Notify Send Result: When **Email Notifications** is set to **On**, the printer sends a notification to the destination specified in **Recipient** when a request to send the document (Polling Send) is completed.

Delete Box:

Deleles the selected box clearing the current settings and deleting all stored documents.

Related Information

➡ "Unregistered Bulletin Board:" on page 132
➡ "Checking the Fax Job History" on page 136

Checking the Status or Logs for Fax Jobs

Displaying Information when Received Faxes are Unprocessed (Unread/Not Printed/Not Saved/Not Forwarded)

When there are unprocessed received documents, the number of unprocessed jobs is displayed on the on the home screen. See the table below for a definition of the "unprocessed".

> ***Important:***
> *When the inbox is full, receiving faxes is disabled. You should delete the documents from the inbox once they have been checked.*

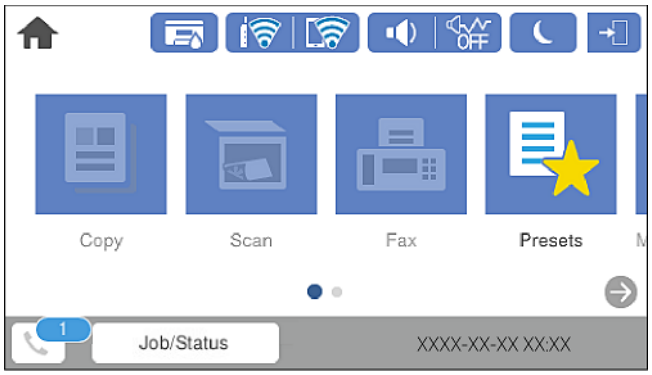

Received Fax Save/Forward Setting	Unprocessed Status
Printing*1	There are received documents waiting to be printed or printing is in progress.
Saving in the inbox or the confidential box	There are unread received documents in the inbox or the confidential box.
Saving in an external memory device	There are received documents that have not been saved in the device because there is no device containing a folder specifically created to save received documents connected to the printer or for other reasons.
Saving on a computer	There are received documents that have not been saved on the computer because the computer is in sleep mode or for other reasons.
Forwarding	There are received documents that have not been forwarded or failed to be forwarded*2.

*1 : When you have not set any of the fax save/forward settings, or when you have set to print received documents while saving them to an external memory device or a computer.

*2 : When you have set to save documents that could not be forwarded in the inbox, there are unread documents that failed to be forwarded in the inbox. When you have set to print documents that failed to be forwarded, printing is not complete.

Note:
If you are using more than one of the fax save/forward settings, the number of unprocessed jobs may be displayed as "2" or "3" even if only one fax has been received. For example, if you have set to save faxes in the inbox and on a computer and one fax is received, the number of unprocessed jobs is displayed as "2" if the fax has not been saved to the inbox and on a computer.

Related Information

➡ "Viewing Received Faxes on the Printer's LCD Screen" on page 123
➡ "Checking Fax Jobs in Progress" on page 136

Checking Fax Jobs in Progress

You can display the screen to check fax jobs for which processing is incomplete. The following jobs are displayed on the check screen. From this screen, you can also print documents that have not yet been printed, or you can resend documents that have failed to send.

- ❏ Received fax jobs below
  - ❏ Not printed yet (When the jobs are set to be printed)
  - ❏ Not saved yet (When the jobs are set to be saved)
  - ❏ Not forwarded yet (When the jobs are set to be forwarded)
- ❏ Outgoing fax jobs that have failed to be sent (If you have enabled **Save Failure Data**)

Follow the steps below to display the check screen.

1. Tap **Job/Status** on the home screen.
2. Tap the **Job Status** tab, and then tap **Active**.
3. Select the job you want to check.

Related Information

➡ "Displaying Information when Received Faxes are Unprocessed (Unread/Not Printed/Not Saved/Not Forwarded)" on page 134

Checking the Fax Job History

You can check the history of sent or received fax jobs, such as the date, time and result for each job.

1. Tap **Job/Status** on the home screen.
2. Select **Log** on the **Job Status** tab.
3. Tap ▼ on the right, and then select **Send** or **Receive**.

   The log for sent or received fax jobs is displayed in reverse chronological order. Tap a job you want to check to display the details.

You can also check the fax history by printing **Fax Log** by selecting **Fax** > (More) > **Fax Report** > **Fax Log**.

Related Information

➡ "More" on page 126

Reprinting Received Documents

You can reprint received documents from the logs of printed fax jobs.

Note that the printed received documents are deleted in chronological order when the printer runs out of memory.

1. Tap **Job/Status** on the home screen.

2. Select **Log** on the **Job Status** tab.

3. Tap ▼ on the right, and then select **Print**.

   The history of sent or received fax jobs is displayed in reverse chronological order.

4. Select a job with from the history list.

   Check the date, time, and result to determine if it is the document you want print.

5. Tap **Print Again** to print the document.

Sending a Fax from a Computer

You can send faxes from the computer by using the FAX Utility and PC-FAX driver.

Note:

❏ *Check if the FAX Utility and the printer's PC-FAX driver has been installed before using this feature.*

"Application for Configuring Fax Operations and Sending Faxes (FAX Utility)" on page 297

"Application for Sending Faxes (PC-FAX Driver)" on page 298

❏ *If the FAX Utility is not installed, install the FAX Utility using the EPSON Software Updater (application for updating software).*

Related Information

➡ "Enabling Sending Faxes from a Computer" on page 399

Sending Documents Created Using an Application (Windows)

By selecting a printer fax from the **Print** menu of an application like Microsoft Word or Excel, you can directly transmit data such as documents, drawings, and tables you have created, with a cover sheet.

Note:
The following explanation uses Microsoft Word as an example. The actual operation may differ depending on the application you use. For details, see the application's help.

1. Using an application, create a document to transmit by fax.

2. Click **Print** from the **File** menu.

   The application's **Print** window appears.

3. Select **XXXXX (FAX)** (where XXXXX is your printer name) in **Printer**, and then check the settings for fax sending.

   ❏ Specify **1** in **Number of copies**. Fax may not be transmitted correctly if you specify **2** or more.

   ❏ You can send up to 100 pages in one fax transmission.

4. Click **Printer Properties** or **Properties** if you want to specify **Paper Size**, **Orientation**, **Color**, **Image Quality**, or **Character Density**.

   For details, see the PC-FAX driver help.

5. Click **Print**.

   Note:
   *When Using FAX Utility for the first time, a window for registering your information is displayed. Enter the necessary information, and then click **OK**.*

   Recipient Settings screen of FAX Utility is displayed.

6. When you want to send other documents in the same fax transmission, select **Add documents to send** checkbox.

   The screen for adding documents is displayed when you click **Next** in step 10.

7. Select **Attach a cover sheet** checkbox if necessary.

8. Specify a recipient.

   ❑ Selecting a recipient (name, fax number and so on) from **PC-FAX Phone Book**:

   If the recipient is saved in the phone book, do the steps below.

   ❶ Click the **PC-FAX Phone Book** tab.

   ❷ Select the recipient from the list and click **Add**.

   ❑ Selecting a recipient (name, fax number and so on) from the contacts on the printer:

   If the recipient is saved in the contacts on the printer, do the steps below.

   ❶ Click the **Contacts on Printer** tab.

   ❷ Select contacts from the list and click **Add** to proceed to **Add to Recipient** window.

   ❸ Select the contacts from the list displayed, and then click **Edit**.

   ❹ Add the personal data such as **Company/Corp.** and **Title** as necessary, and then click **OK** to return to the **Add to Recipient** window.

   ❺ As necessary, select the checkbox of **Register in the PC-FAX Phone Book** to save the contacts to **PC-FAX Phone Book**.

   ❻ Click **OK**.

   ❑ Specifying a recipient (name, fax number and so on) directly:

   Do the steps below.

   ❶ Click the **Manual Dial** tab.

   ❷ Enter the necessary information.

   ❸ Click **Add**.

   Furthermore, by clicking **Save to Phone Book**, you can save the recipient in the list under the **PC-FAX Phone Book** tab.

   Note:

   ❑ *If your printer's Line Type is set to **PBX** and the access code has been set to use # (hash) instead of entering the exact prefix code, enter # (hash). For details, see Line Type in Basic Settings from related information link below.*

   ❑ *If you have selected **Enter fax number twice** in the **Optional Settings** on the FAX Utility main screen, you need to enter the same number again when you click **Add** or **Next**.*

   The recipient is added to the **Recipient List** displayed in the upper part of the window.

9. Click **Next**.

   ❑ When you have selected **Add documents to send** checkbox, follow the steps below to add documents in the **Document Merging** window.

   ❶ Open a document you want to add, and then select the same printer (fax name) in the **Print** window. The document is added to the **Document List to Merge** list.

   ❷ Click **Preview** to check the merged document.

   ❸ Click **Next**.

   Note:
   *The **Image Quality** and **Color** settings you have selected for the first document are applied to other documents.*

   ❑ When you have selected **Attach a cover sheet** checkbox, specify the content of the cover sheet in the **Cover Sheet Settings** window.

   ❶ Select a cover sheet from samples in the **Cover Sheet** list. Note that there is no function to create an original cover sheet or to add an original cover sheet to the list.

   ❷ Enter the **Subject** and **Message**.

   ❸ Click **Next**.

   Note:
   *Set the following as necessary in **Cover Sheet Settings**.*

   ❑ *Click **Cover Sheet Formatting** if you want to change the order of the items on the cover sheet. You can select the cover sheet size in **Paper Size**. You can also select a cover sheet at a different size to the document being transmitted.*

   ❑ *Click **Font** if you want to change the font used for the text on the cover sheet.*

   ❑ *Click **Sender Settings** if you want to change the sender information.*

   ❑ *Click **Detailed Preview** if you want to check the cover sheet with the subject and the message you entered.*

10. Check the transmission content and click **Send**.

    Make sure the name and fax number of the recipient are correct before transmitting. Click **Preview** to preview the cover sheet and document to transmit.

    Once transmission starts, a window displaying the transmission status appears.

    Note:

    ❑ *To stop transmitting, select the data, and click **Cancel** ✕. You can also cancel using the printer's control panel.*

    ❑ *If an error occurs during transmission, the **Communication error** window appears. Check the error information and retransmit.*

    ❑ *The Fax Status Monitor screen (the screen mentioned above where you can check the transmission status) is not displayed if Display Fax Status Monitor During Transmission is not selected in the **Optional Settings** screen of the FAX Utility main screen.*

Related Information

➡ "Basic Settings" on page 309

Sending Documents Created Using an Application (Mac OS)

By selecting a fax-capable printer from the **Print** menu of a commercially available application, you can send data such as documents, drawings, and tables, you have created.

Note:
The following explanation uses Text Edit, a standard Mac OS application as an example.

1. Create the document you want to send by fax in an application.

2. Click **Print** from the **File** menu.

   The application's **Print** window is displayed.

3. Select your printer (fax name) in **Name**, click ▼ to display the detailed settings, check the print settings, and then click **OK**.

4. Make settings for each item.

   ❏ Specify **1** in **Number of copies**. Even if you specify **2** or more, only 1 copy is sent.

   ❏ You can send up to 100 pages in one fax transmission.

   Note:
   The page size of documents you can send is the same as the paper size you can fax from the printer.

5. Select Fax Settings from the popup menu, and then make settings for each item.

   See the PC-FAX driver's help for explanations on each setting item.

   Click at the bottom left of the window to open the PC-FAX driver's help.

6. Select the Recipient Settings menu, and then specify the recipient.

   ❏ Specifying a recipient (name, fax number, and so on) directly:

   Click the **Add** item, enter the necessary information, and then click . The recipient is added to the Recipient List displayed in the upper part of the window.

   If you have selected "Enter fax number twice" in the PC-FAX driver settings, you need to enter the same number again when you click .

   If your fax connection line requires a prefix code, enter External Access Prefix.

   Note:
   *If your printer's Line Type is set to **PBX** and the access code has been set to use # (hash) instead of entering the exact prefix code, enter # (hash). For details, see Line Type in Basic Settings from Related Information link below.*

   ❏ Selecting a recipient (name, fax number, and so on) from the phone book:

   If the recipient is saved in the phone book, click . Select the recipient from the list, and then click **Add** > **OK**.

   If your fax connection line requires a prefix code, enter External Access Prefix.

   Note:
   *If your printer's Line Type is set to **PBX** and the access code has been set to use # (hash) instead of entering the exact prefix code, enter # (hash). For details, see Line Type in Basic Settings from Related Information link below.*

7. Check the recipient settings, and then click **Fax**.

   Sending starts.

   Make sure the name and fax number of the recipient are correct before transmitting.

Note:

- *If you click the printer icon in Dock, the transmission status check screen is displayed. To stop sending, click the data, and then click **Delete**.*
- *If an error occurs during transmission, the **Sending failed** message is displayed. Check the transmission records on the **Fax Transmission Record** screen.*
- *Mixed paper size documents may not be sent correctly.*

Receiving Faxes on a Computer

Faxes can be received by a printer and saved in PDF format on a computer connected to the printer. Use the FAX Utility (application) to make settings.

For details on how to operate FAX Utility, see Basic Operations in the FAX Utility help (displayed on the main window). If the password entry screen is displayed on the computer screen while you are making settings, enter the password. If you do not know the password, contact your administrator.

Note:

- *Check if the FAX Utility and the printer's PC-FAX driver have been installed and the FAX Utility settings have been made before using this feature.*

  "Application for Configuring Fax Operations and Sending Faxes (FAX Utility)" on page 297

  "Application for Sending Faxes (PC-FAX Driver)" on page 298

- *If the FAX Utility is not installed, install the FAX Utility using the EPSON Software Updater (application for updating software).*

Important:

- *To receive faxes on a computer, the **Receive Mode** on the printer's control panel must be set to **Auto**. Contact your administrator for information on the printer settings status. To make settings on the printer's control panel, select **Settings** > **General Settings** > **Fax Settings** > **Basic Settings** > **Receive Mode**.*
- *The computer set to receive faxes should always be on. Received documents are saved in the printer's memory temporarily before the documents are saved on the computer. If you turn off the computer, the printer's memory might become full as it cannot send the documents to the computer.*
- *The number of documents that have been temporarily saved to the printer's memory are displayed on the on the printer's control panel.*
- *To read the received faxes, you need to install a PDF viewer such as Adobe Reader in the computer.*

Related Information

➡ "Receiving Incoming Faxes" on page 119

Checking for New Faxes (Windows)

By setting up a computer to save faxes received by the printer, you can check the processing status of received faxes, and whether or not there are any new faxes using the fax icon on the Windows task bar. By setting up the computer to display a notification when new faxes are received, a notification screen pops up near the Windows system tray, and you can check the new faxes.

Note:
- *Received fax data saved to the computer is removed from the printer's memory.*
- *You need Adobe Reader to view the received faxes saved as PDF files.*

Using the Fax Icon on the Task Bar (Windows)

You can check for new faxes and the operation status by using the fax icon displayed on the Windows taskbar.

1. Check the icon.
   - : Standing by.
   - : Checking for new faxes.
   - : Importing new faxes is complete.
2. Right-click the icon, and then click **View Receiving Fax Record**.

   The **Receiving Fax Record** screen is displayed.
3. Check the date and the sender in the list, and then open the received file as a PDF.

   Note:
   - *Received faxes are automatically renamed using the following naming format.*

     YYYYMMDDHHMMSS_xxxxxxxxxx_nnnnn (Year/Month/Day/Hour/Minute/Second_sender's number)
   - *You can also open the received fax folder directly when you right-click the icon. For details, see **Optional Settings** in the FAX Utility and its help (displayed on the main window).*

While the fax icon indicates that it is standing by, you can check for new faxes instantly by selecting **Check new faxes now**.

Using the Notification Window (Windows)

When you set to notify you the new faxes exist, a notification window is displayed near the task bar for each the fax.

1. Check the notification screen displayed on your computer screen.

   Note:
   The notification screen disappears if no operation is performed for a given length of time. You can change the notification settings such as the display time.
2. Click anywhere in the notification screen, except for the button.

   The **Receiving Fax Record** screen is displayed.
3. Check the date and the sender in the list, and then open the received file as a PDF.

   Note:
   - *Received faxes are automatically renamed using the following naming format.*

     YYYYMMDDHHMMSS_xxxxxxxxxx_nnnnn (Year/Month/Day/Hour/Minute/Second_sender's number)
   - *You can also open the received fax folder directly when you right-click the icon. For details, see **Optional Settings** in the FAX Utility and its help (displayed on the main window).*

Checking for New Faxes (Mac OS)

You can check for new faxes using one of the following methods. This is available only on computers set to **"Save" (save faxes on this computer)**.

❏ Open the received fax folder (specified in **Received Fax Output Settings.**)

❏ Open the Fax Receive Monitor and click **Check new faxes now**.

❏ Notification that new faxes have been received

Select the **Notify me of new faxes via a dock icon** in the **Fax Receive Monitor** > **Preferences** in the FAX Utility, the fax receive monitor icon on the Dock jumps to notify you that new faxes have arrived.

Open the Received Fax Folder from Received Fax Monitor (Mac OS)

You can open the save folder from the computer specified to receive faxes when selecting **"Save" (save faxes on this computer)**.

1. Click the received fax monitor icon on the Dock to open **Fax Receive Monitor**.

2. Select the printer and click **Open folder**, or double click the printer name.

3. Check the date and the sender in the file name, and then open the PDF file.

   Note:
   Received faxes are automatically renamed using the following naming format.

   YYYYMMDDHHMMSS_xxxxxxxxxx_nnnnn (Year/Month/Day/Hour/Minute/Second_sender's number)

   Information sent from the sender is displayed as the sender's number. This number may not be displayed depending on the sender.

Canceling the Feature that Saves Incoming Faxes to the Computer

You can cancel saving faxes to the computer by using the FAX Utility.

For details, see Basic Operations in the FAX Utility help (displayed on the main window).

Note:

❏ *If there are any faxes that have not been saved to the computer, you cannot cancel the feature that saves faxes on the computer.*

❏ *You cannot change settings that have been locked by your administrator.*

❏ *You can also change the settings on the printer. Contact your administrator for information on canceling settings to save received faxes on the computer.*

Related Information

➡ "Making Save to Computer Setting not to Receive Faxes" on page 400

Maintaining the Printer

Checking the Status of Consumables. 145

Improving Print, Copy, Scan, and Fax Quality. 145

Cleaning the Printer. 153

Cleaning Spilled ink. 154

Checking the Total Number of Pages Fed Through the Printer. 154

Saving Power. 155

Installing or Uninstalling Applications Separately. 155

Transporting and Storing the Printer. 162

Checking the Status of Consumables

You can check the approximate service life of the maintenance box from the control panel. tap **Job/Status** on the home screen, and then select **Printer Status**.

You can check the approximate ink levels and the approximate service life of the maintenance box from the computer. See the related information link below for details.

To confirm the actual ink remaining, visually check the ink levels in all of the printer's tanks.

Related Information

➡ "Maintenance Tab" on page 45
➡ "Guide to Mac OS Printer Driver" on page 295
➡ "It is Time to Refill the Ink" on page 228
➡ "It is Time to Replace the Maintenance Box" on page 233

Improving Print, Copy, Scan, and Fax Quality

Adjusting the Print Quality

If you notice a misaligned vertical lines, blurred images, or horizontal banding, adjust the print quality.

1. Load A4-size plain paper in the paper cassette 1.
2. Select **Settings** on the home screen.
3. Select **Maintenance** > **Print Quality Adjustment**.
4. Follow the on-screen instructions to check the printer to improve print quality.

   If a message is displayed recommending that you clean the print head, perform print head cleaning.
5. Follow the on-screen instructions to print the patterns for print head alignment, and then align the print head.
   - ❏ This pattern allows you to perform alignment if your printouts look blurry.

     Find and select the number for the most solid pattern.

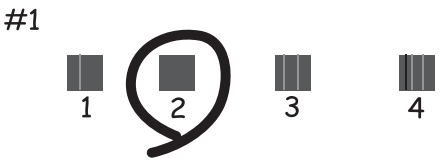

❏ This pattern allows you to perform alignment if vertical ruled lines appear misaligned.
Find and select the number for the pattern that has the least misaligned vertical line.

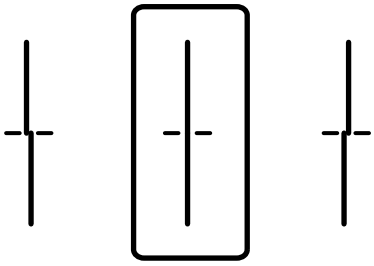

❏ This pattern allows you to perform alignment if you see horizontal banding at regular intervals.
Find and select the number for the least separated and overlapping pattern.

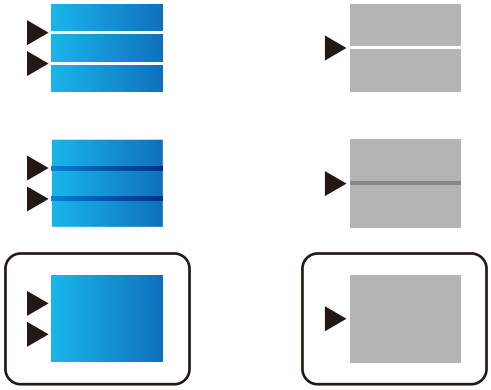

Checking and Cleaning the Print Head

If the nozzles are clogged, the printouts become faint, there is visible banding, or unexpected colors appear. If the nozzles are severely clogged, a blank sheet will be printed. When print quality has declined, first use the nozzle check feature to check if the nozzles are clogged. If the nozzles are clogged, clean the print head.

Important:

❏ *Do not open the scanner unit or turn off the printer during head cleaning. If the head cleaning is incomplete, you may not be able to print.*

❏ *Head cleaning consumes ink and should not be performed more than necessary.*

❏ *When ink is low, you may not be able to clean the print head.*

❏ *If print quality has not improved after repeating nozzle check and head cleaning 3 times, wait for at least 12 hours without printing, and then run the nozzle check again and repeat the head cleaning if necessary. We recommend turning off the printer by using the ⏻ button. If print quality has still not improved, run Power Cleaning.*

❏ *To prevent the print head from drying out, do not unplug the printer while the power is on.*

Checking and Cleaning the Print Head (Control Panel)

1. Select **Settings** on the home screen.

2. Select **Maintenance** > **Print Head Nozzle Check**.

3. Follow the on-screen instructions to print the nozzle check pattern.

4. Check the printed pattern to see if the print head nozzles are clogged.

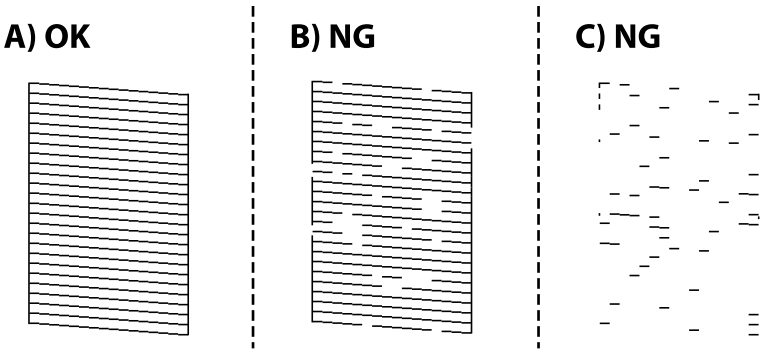

❏ A:

All lines are printed. Select ○. No further steps are needed.

❏ B or close to B

Some nozzles are clogged. Select ✕, and then select **Print Head Cleaning** on the next screen.

❏ C or close to C

If most lines are missing or not printed, this indicates most nozzles are clogged. Run **Power Cleaning**. For details, see "Related information" below.

5. When **Print Head Cleaning** is finished, print the nozzle check pattern again. Repeat cleaning and printing the pattern until all lines are printed completely.

> ***Important:***
> *If print quality has not improved after repeating nozzle check and head cleaning 3 times, wait for at least 12 hours without printing, and then run the nozzle check again and repeat the head cleaning if necessary. We recommend turning off the printer by using the ⏻ button. If print quality has still not improved, run Power Cleaning.*

Related Information

➡ "Application for Printing from a Computer (Windows Printer Driver)" on page 293
➡ "Running Power Cleaning (Windows)" on page 148
➡ "Running Power Cleaning (Mac OS)" on page 149

Running Power Cleaning

The Power Cleaning feature may improve print quality in the following cases.

❏ When most nozzles are clogged.

❏ When you have performed a nozzle check and head cleaning 3 times and waited for at least 12 hours without printing, but print quality still did not improve.

Before running this feature, use the nozzle check feature to check if the nozzles are clogged, read the following instructions, and then run Power Cleaning.

Important:

Make sure that there is enough ink in the ink tanks.

Visually check all ink tanks are at least a third full. Low ink levels during Power Cleaning could damage the product.

Important:

An interval of 12 hours is required between each Power Cleaning.

Normally, a single Power Cleaning should resolve the print quality issue within 12 hours. Therefore, to avoid unnecessary ink usage, you must wait 12 hours before you try it again.

Important:

Maintenance box replacement may be required.

Ink will be deposited to the maintenance box. If it becomes full, you must prepare and install a replacement maintenance box to continue printing.

Note:
When the ink levels or the free space in the maintenance box are insufficient for Power Cleaning, you cannot run this feature. Even in this case, the levels and the free space for printing may remain.

Related Information

➡ "Checking and Cleaning the Print Head" on page 146

Running Power Cleaning (Windows)

1. Access the printer driver window.
2. Click **Power Cleaning** on the **Maintenance** tab.
3. Follow the on-screen instructions.

   Note:
   If you cannot run this feature, solve the problems that are displayed on the printer's control panel. Next, follow this procedure from step 1 to run this feature again.

Important:

If print quality has not improved after running Power Cleaning, wait for at least 12 hours without printing, and then print the nozzle check pattern again. Run Print Head Cleaning or Power Cleaning again depending on the printed pattern. If quality still does not improve, contact Epson support.

Related Information

➡ "Running Power Cleaning" on page 147
➡ "Application for Printing from a Computer (Windows Printer Driver)" on page 293

Running Power Cleaning (Mac OS)

1. Select **System Preferences** from the Apple menu > **Printers & Scanners** (or **Print & Scan**, **Print & Fax**) and then select the printer.
2. Click **Options & Supplies** > **Utility** > **Open Printer Utility**.
3. Click **Power Cleaning**.
4. Follow the on-screen instructions.

   Note:
   If you cannot run this feature, solve the problems that are displayed on the printer's control panel. Next, follow this procedure from step 1 to run this feature again.

> ***Important:***
> *If print quality has not improved after running Power Cleaning, wait for at least 12 hours without printing, and then print the nozzle check pattern again. Run Print Head Cleaning or Power Cleaning again depending on the printed pattern. If quality still does not improve, contact Epson support.*

Related Information

➡ "Running Power Cleaning" on page 147

Preventing nozzle clogging

Always use the power button when turning the printer on and off.

Check that the power light is off before you disconnect the power cord.

The ink itself can dry out if it is not covered. Just like placing a cap on a fountain pen or an oil pen to prevent it from drying, make sure the print head is capped properly to prevent the ink from drying.

When the power cord is unplugged or a power outage occurs while the printer is in operation, the print head may not be capped properly. If the print head is left as it is, it will dry out causing nozzles (ink outlets) to clog.

In these cases, turn the printer on and off again as soon as possible to cap the print head.

Aligning the Print Head (Control Panel)

1. Load A4-size plain paper in the printer.

   "Loading Paper" on page 31
2. Select **Maintenance** on the home screen.
3. Select **Print Head Alignment**.
4. Select one of the alignment menus, and then follow the on-screen instructions to print an alignment pattern.
   - ❏ Ruled Line Alignment: Select this if your printouts look blurry or vertical ruled lines appear misaligned.
   - ❏ Horizontal Alignment: Select this if you see horizontal banding at regular intervals.

5. Follow the on-screen instructions.

Cleaning the Paper Path for Ink Smears

When the printouts are smeared or scuffed, clean the roller inside.

> ***Important:***
> *Do not use tissue paper to clean the inside of the printer. The print head nozzles may be clogged with lint.*

1. Select **Settings** on the home screen.
2. Select **Maintenance** > **Paper Guide Cleaning**.
3. Select the paper source, load A4-size plain paper in the paper source you selected, and then follow the on-screen instructions to clean the paper path.

   "Loading Paper" on page 31

   Note:
   Repeat this procedure until the paper is not smeared with ink. If the printouts are still smeared or scuffed, clean the other paper sources.

Cleaning the Scanner Glass

When the copies or scanned images are smeared, clean the scanner glass.

> ***Caution:***
> *Be careful not to trap your hand or fingers when opening or closing the document cover. Otherwise you may be injured.*

> ***Important:***
> *Never use alcohol or thinner to clean the printer. These chemicals can damage the printer.*

1. Open the document cover.

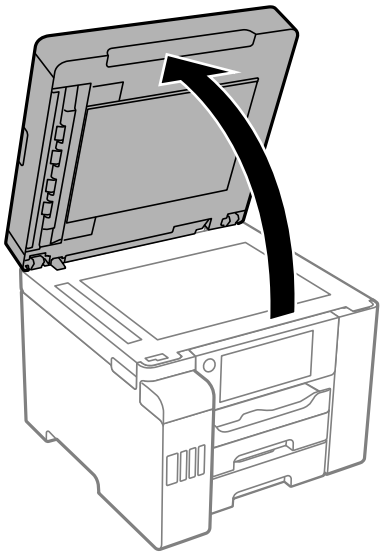

2. Use a soft, dry, clean cloth to clean the surface of the scanner glass.

> ***Important:***
> - *If the glass surface is stained with grease or some other hard-to-remove material, use a small amount of glass cleaner and a soft cloth to remove it. Wipe off all remaining liquid.*
> - *Do not press the glass surface too hard.*
> - *Be careful not to scratch or damage the surface of the glass. A damaged glass surface can decrease the scan quality.*

Cleaning the ADF

When the copied or scanned images from the ADF are smeared or the originals do not feed in the ADF correctly, clean the ADF.

> ***Important:***
> *Never use alcohol or thinner to clean the printer. These chemicals can damage the printer.*

1. Open the ADF cover.

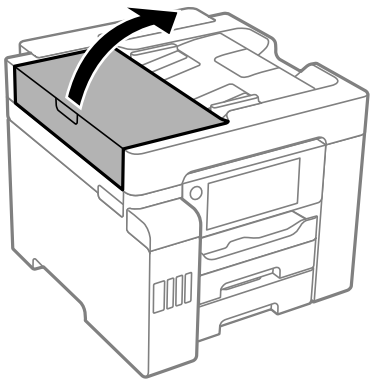

2. Use a soft, moist cloth to clean the roller and the interior of the ADF.

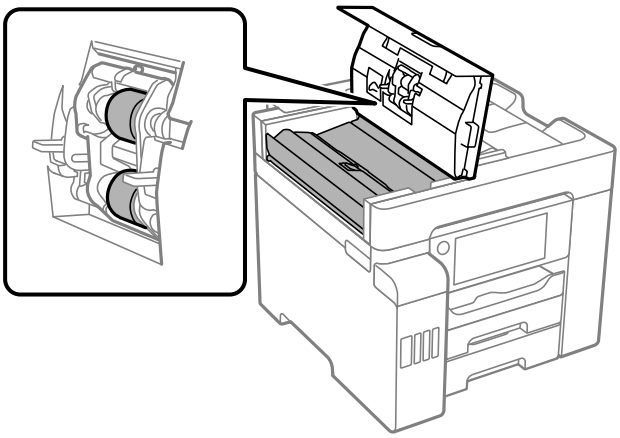

Important:

- *Using a dry cloth may damage the surface of the roller.*
- *Use the ADF after the roller has dried.*

3. Close the ADF cover, and then open the document cover.

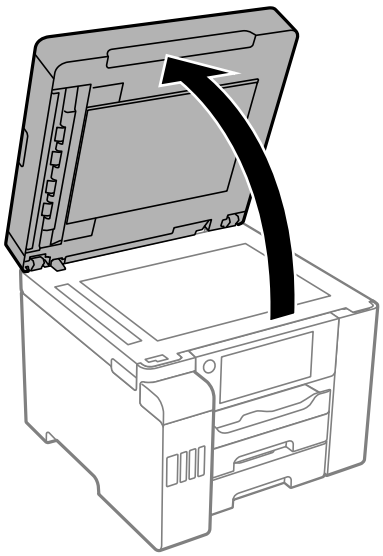

4. Clean the part that is shown in the illustration.

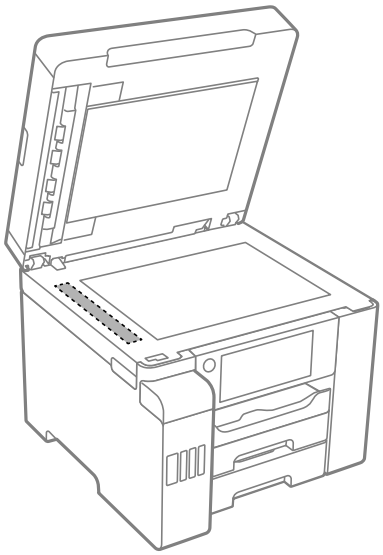

Important:

- *If the glass surface is stained with grease or some other hard-to-remove material, use a small amount of glass cleaner and a soft cloth to remove it. Wipe off all remaining liquid.*
- *Do not press the glass surface too hard.*
- *Be careful not to scratch or damage the surface of the glass. A damaged glass surface can decrease the scan quality.*

Cleaning the Printer

If the printer's outer case is dirty or dusty, turn off the printer and clean it with a soft, clean, and moist cloth. If you cannot remove the dirt, try cleaning with a soft, clean, and moist cloth moistened with a mild detergent.

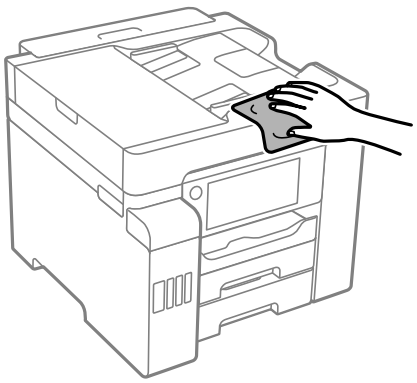

Important:

- ❏ *Be careful not to get water onto the printer mechanism or any electrical components. Otherwise, the printer could be damaged.*
- ❏ *Never use alcohol or paint thinner to clean the printer cover. These chemicals can damage the components and the case.*
- ❏ *Do not touch the white flat cable, translucent film, and ink tubes inside the printer. Doing so may cause a malfunction.*

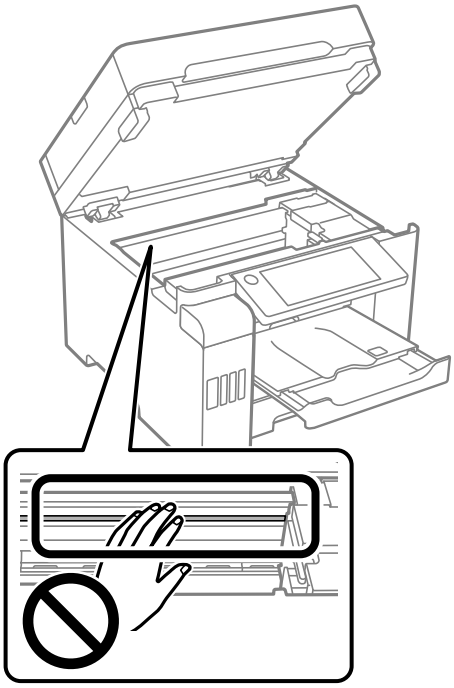

Cleaning Spilled ink

If ink has been spilled, clean it up in the following ways.

- ❏ If ink adheres to the area around the tank, wipe it off using a napless, clean cloth or cotton swab.
- ❏ If ink spills on the desk or floor, wipe it off immediately. When ink is dried, it will be difficult to remove the smear. To prevent the smear from spreading, blot the ink with a dry cloth, and then wipe it with a moist cloth.
- ❏ If ink gets on your hands, wash them with water and soap.

Checking the Total Number of Pages Fed Through the Printer

You can check the total number of pages fed through the printer.

Related Information

➡ "Application for Printing from a Computer (Windows Printer Driver)" on page 293

➡ "Maintenance Tab" on page 45
➡ "Guide to Mac OS Printer Driver" on page 295

Checking the Total Number of Pages Fed Through the Printer (Control Panel)

The information is printed together with the nozzle check pattern.

1. Select **Settings** on the home screen.
2. Select **Maintenance** > **Print Head Nozzle Check**.
3. Follow the on-screen instructions to print the nozzle check pattern.

Saving Power

The printer enters sleep mode or turns off automatically if no operations are performed for a set period. You can adjust the time before power management is applied. Any increase will affect the product's energy efficiency. Please consider the environment before making any change.

Depending on the location of purchase, the printer may have a feature that turns it off automatically if it is not connected to the network for 30 minutes.

Saving Power (Control Panel)

1. Select **Settings** on the home screen.
2. Select **General Settings** > **Basic Settings**.
3. Do one of the following.

   Note:
   *Your product may have the **Power Off Settings** or **Power Off Timer** feature depending on the location of purchase.*

   - ❑ Select **Sleep Timer** or **Power Off Settings** > **Power Off If Inactive** or **Power Off If Disconnected**, and then make settings.
   - ❑ Select **Sleep Timer** or **Power Off Timer**, and then make settings.

Installing or Uninstalling Applications Separately

Connect your computer to the network and install the latest version of applications from the website. Log in to your computer as an administrator. Enter the administrator password if the computer prompts you.

Installing the Applications Separately

Note:
When reinstalling an application, you need to uninstall it first.

1. Make sure the printer and the computer are available for communication, and the printer is connected to the Internet.

2. Start EPSON Software Updater.

   The screenshot is an example on Windows.

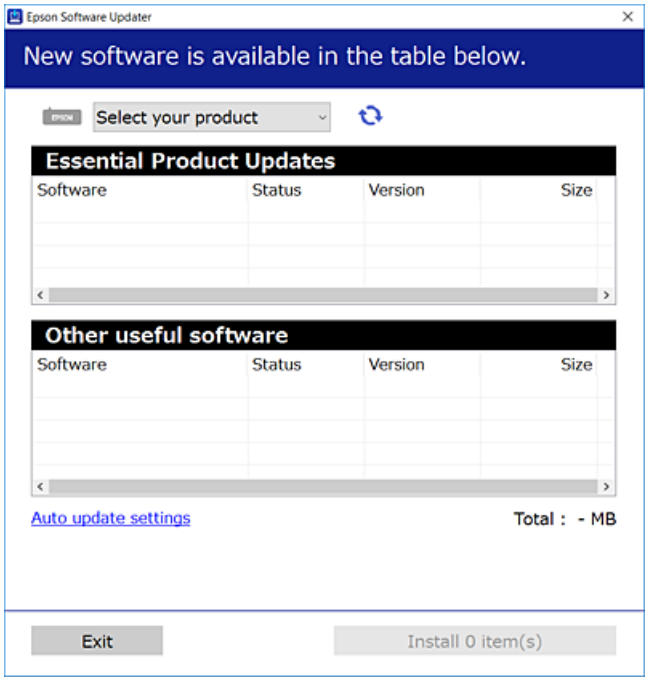

3. For Windows, select your printer, and then click to check for the latest available applications.

4. Select the items you want to install or update, and then click the install button.

> ***Important:***
> *Do not turn off or unplug the printer until the update is complete. Doing so may result in malfunction of the printer.*

Note:
- *You can download the latest applications from the Epson website.*
  http://www.epson.com
- *If you use Windows Server operating systems, you cannot use Epson Software Updater. Download the latest applications from the Epson website.*

Related Information

➡ "Application for Updating Software and Firmware (EPSON Software Updater)" on page 301
➡ "Uninstalling Applications" on page 158

Checking if a genuine Epson printer driver is installed - Windows

You can check if a genuine Epson printer driver is installed on your computer by using one of the following methods.

Select **Control Panel** > **View devices and printers** (**Printers**, **Printers and Faxes**), and then do the following to open the print server properties window.

- ❏ Windows Windows 10/Windows 8.1/Windows 8/Windows 7/Windows Server 2019/Windows Server 2016/Windows Server 2012 R2/Windows Server 2012/Windows Server 2008 R2

  Click the printer icon, and then click **Print server properties** at the top of the window.

- ❏ Windows Vista/Windows Server 2008

  Right-click on the **Printers** folder, and then click **Run as administrator** > **Server Properties**.

- ❏ Windows XP/Windows Server 2003 R2/Windows Server 2003

  From the **File** menu, select **Server Properties**.

Click the **Driver** tab. If your printer name is displayed in the list, a genuine Epson printer driver is installed on your computer.

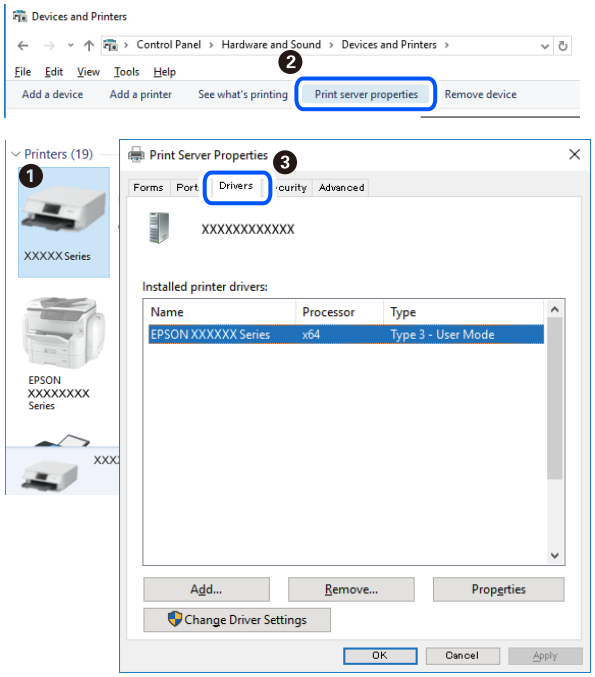

Related Information

➡ "Installing the Applications Separately" on page 156

Checking if a genuine Epson printer driver is installed - Mac OS

You can check if a genuine Epson printer driver is installed on your computer by using one of the following methods.

Select **System Preferences** from the Apple menu > **Printers & Scanners** (or **Print & Scan**, **Print & Fax**), and then select the printer. Click **Options & Supplies**, and if the **Options** tab and **Utility** tab are displayed on the window, a genuine Epson printer driver is installed on your computer.

Related Information

➡ "Installing the Applications Separately" on page 156

Adding the Printer (for Mac OS Only)

1. Select **System Preferences** from the Apple menu > **Printers & Scanners** (or **Print & Scan**, **Print & Fax**).
2. Click +, and then select **Add Other Printer or Scanner**.
3. Select your printer, and then select your printer from the **Use**.
4. Click **Add**.

   Note:
   If your printer is not listed, check that it is correctly connected to the computer and that the printer is on.

Uninstalling Applications

Log in to your computer as an administrator. Enter the administrator password if the computer prompts you.

Uninstalling Applications - Windows

1. Press the ⏻ button to turn off the printer.
2. Quit all running applications.

3. Open **Control Panel**:
   - ❏ Windows 10/Windows Server 2019/Windows Server 2016

     Click on the start button, and then select **Windows System** > **Control Panel**.
   - ❏ Windows 8.1/Windows 8/Windows Server 2012 R2/Windows Server 2012

     Select **Desktop** > **Settings** > **Control Panel**.
   - ❏ Windows 7/Windows Vista/Windows XP/Windows Server 2008 R2/Windows Server 2008/Windows Server 2003 R2/Windows Server 2003

     Click the start button and select **Control Panel**.
4. Open **Uninstall a program** (or **Add or Remove Programs**):
   - ❏ Windows 10/Windows 8.1/Windows 8/Windows 7/Windows Vista/Windows Server 2019/Windows Server 2016/Windows Server 2012 R2/Windows Server 2012/Windows Server 2008 R2/Windows Server 2008

     Select **Uninstall a program** in **Programs**.
   - ❏ Windows XP/Windows Server 2003 R2/Windows Server 2003

     Click **Add or Remove Programs**.
5. Select the application you want to uninstall.

   You cannot uninstall the printer driver if there is any print jobs. Delete or wait to be printed the jobs before uninstalling.
6. Uninstall the applications:
   - ❏ Windows 10/Windows 8.1/Windows 8/Windows 7/Windows Vista/Windows Server 2019/Windows Server 2016/Windows Server 2012 R2/Windows Server 2012/Windows Server 2008 R2/Windows Server 2008

     Click **Uninstall/Change** or **Uninstall**.
   - ❏ Windows XP/Windows Server 2003 R2/Windows Server 2003

     Click **Change/Remove** or **Remove**.

   Note:
   *If the **User Account Control** window is displayed, click **Continue**.*
7. Follow the on-screen instructions.

Uninstalling Applications - Mac OS

1. Download the Uninstaller using EPSON Software Updater.

   Once you have downloaded the Uninstaller, you do not need to download it again each time you uninstall the application.
2. Press the ⏻ button to turn off the printer.
3. To uninstall the printer driver or PC-FAX driver, select **System Preferences** from the Apple menu > **Printers & Scanners** (or **Print & Scan**, **Print & Fax**), and then remove the printer from the enabled printers list.
4. Quit all running applications.
5. Select **Go** > **Applications** > **Epson Software** > **Uninstaller**.

6. Select the application you want to uninstall, and then click **Uninstall**.

> **Important:**
> *The Uninstaller removes all drivers for Epson inkjet printers on the computer. If you use multiple Epson inkjet printers and you only want to delete some drivers, delete all of them first, and then install the necessary printer driver again.*

Note:
*If you cannot find the application you want to uninstall in the application list, you cannot uninstall using the Uninstaller. In this situation, select **Go** > **Applications** > **Epson Software**, select the application you want to uninstall, and then drag it to the trash icon.*

Related Information

➡ "Application for Updating Software and Firmware (EPSON Software Updater)" on page 301

Updating Applications and Firmware

You may be able to clear certain problems and improve or add functions by updating the applications and the firmware. Make sure you use the latest version of the applications and firmware.

1. Make sure that the printer and the computer are connected, and the computer is connected to the internet.

2. Start EPSON Software Updater, and update the applications or the firmware.

> **Important:**
> *Do not turn off the computer or the printer until the update is complete; otherwise, the printer may malfunction.*

Note:
If you cannot find the application you want to update in the list, you cannot update using the EPSON Software Updater. Check for the latest versions of the applications from your local Epson website.

http://www.epson.com

Related Information

➡ "Application for Updating Software and Firmware (EPSON Software Updater)" on page 301

Updating the Printer's Firmware using the Control Panel

If the printer can be connected to the Internet, you can update the printer's firmware using the control panel. You can also set the printer to regularly check for firmware updates and notify you if any are available.

1. Select **Settings** on the home screen.

2. Select **General Settings** > **System Administration** > **Firmware Update** > **Update**.

Note:
*Select **Notification** > **On** to set the printer to regularly check for available firmware updates.*

3. Check the message displayed on the screen and tap **Start Checking** to start searching for available updates.

4. If a message is displayed on the LCD screen informing you that a firmware update is available, follow the on-screen instructions to start the update.

> ***Important:***
> - *Do not turn off or unplug the printer until the update is complete; otherwise, the printer may malfunction.*
> - *If the firmware update is not completed or is unsuccessful, the printer does not start up normally and "Recovery Mode" is displayed on the LCD screen the next time the printer is turned on. In this situation, you need to update the firmware again using a computer. Connect the printer to the computer with a USB cable. While "Recovery Mode" is displayed on the printer, you cannot update the firmware over a network connection. On the computer, access your local Epson website, and then download the latest printer firmware. See the instructions on the website for the next steps.*

Related Information

➡ "System Administration" on page 320

Updating Firmware Using Web Config

When the printer can connect to the Internet, you can update the firmware from Web Config.

1. Access Web Config and select the **Device Management** tab > **Firmware Update**.

2. Click **Start**, and then follow the on-screen instructions.

   The firmware confirmation starts, and the firmware information is displayed if the updated firmware exists.

Note:
You can also update the firmware using Epson Device Admin. You can visually confirm the firmware information on the device list. It is useful when you want to update multiple devices' firmware. See the Epson Device Admin guide or help for more details.

Related Information

➡ "Application for Configuring Printer Operations (Web Config)" on page 299

Updating Firmware without Connecting to the Internet

You can download the device's firmware from Epson website on the computer, and then connect the device and the computer by USB cable to update the firmware. If you cannot update over the network, try this method.

1. Access Epson website and download the firmware.

2. Connect the computer that contains the downloaded firmware to the printer by USB cable.

3. Double-click the downloaded .exe file.

   Epson Firmware Updater starts.

4. Follow the on-screen instructions.

Transporting and Storing the Printer

When you need to store the printer or transport it when moving or for repairs, follow the steps below to pack the printer.

1. Turn off the printer by pressing the ⏻ button.

2. Make sure the power light turns off, and then unplug the power cord.

   > ***Important:***
   > *Unplug the power cord when the power light is off. Otherwise, the print head does not return to the home position causing the ink to dry, and printing may become impossible.*

3. Disconnect all cables such as the power cord and USB cable.

4. Make sure there is no external USB device inserted.

5. Remove all of the paper from the printer.

6. Make sure there are no originals on the printer.

7. Open the scanner unit with the document cover closed.

   > ***Caution:***
   > *Be careful not to trap your hand or fingers when opening or closing the scanner unit. Otherwise you may be injured.*

8. Set the transportation lock to the locked (Transport) position.

   The transportation lock stops ink supply to prevent ink leakage when transporting and storing.

If the print head is not in the position shown below, move it by hand.

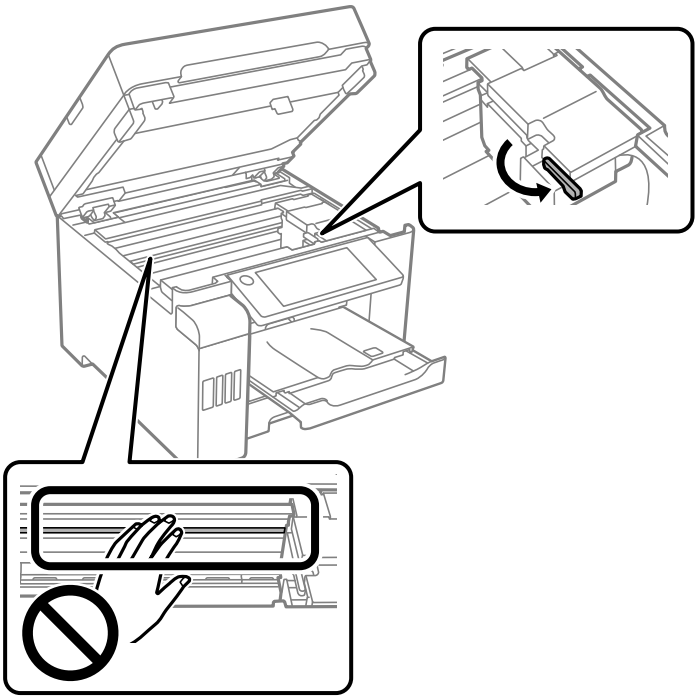

9. Secure the print head to the case with tape.

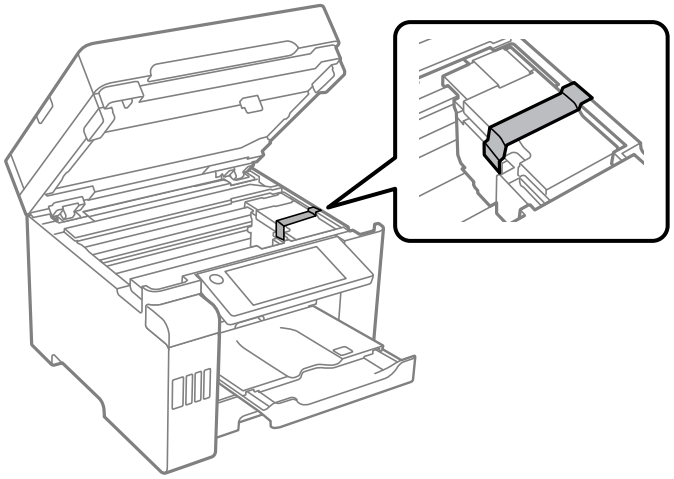

10. Close the scanner unit.

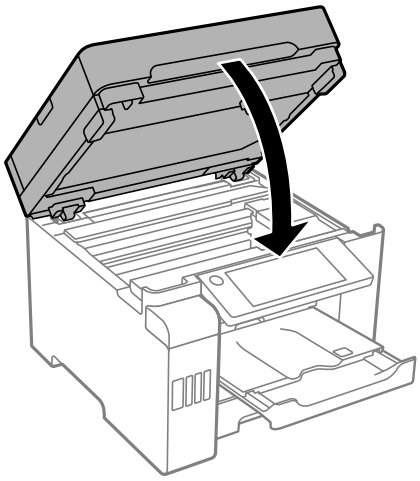

11. Make sure you install the ink tank cap securely onto the ink tank.

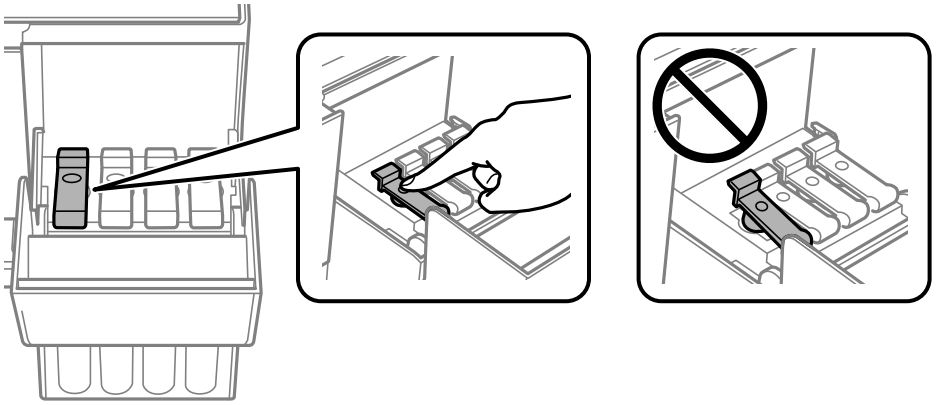

12. Close the ink tank cover securely.

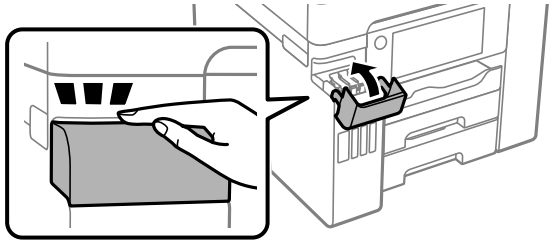

13. Prepare to pack the printer as shown below.

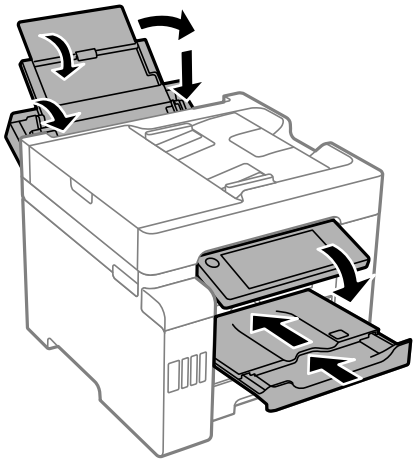

14. Place the printer in the plastic bag and fold it closed.

15. Pack the printer in its box using the protective materials.

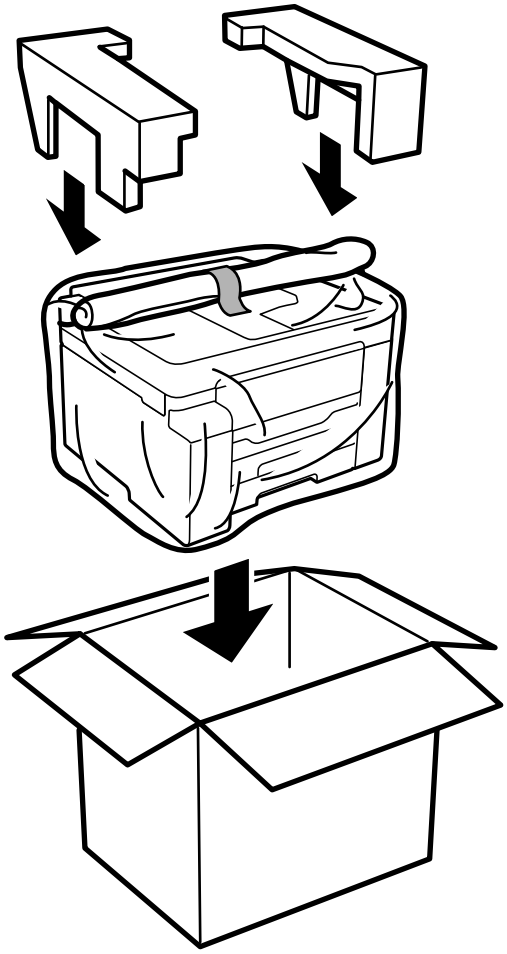

Important:

- *When carrying the printer, lift it using a stable position. Lifting the printer using an unstable position may result in injury.*
- *Because this printer is heavy, it should always be carried by two or more people when unpacking and transporting.*
- *When lifting the printer, place your hands in the positions shown below. If you lift the printer holding other positions, the printer may fall or you may trap your fingers when placing the printer.*

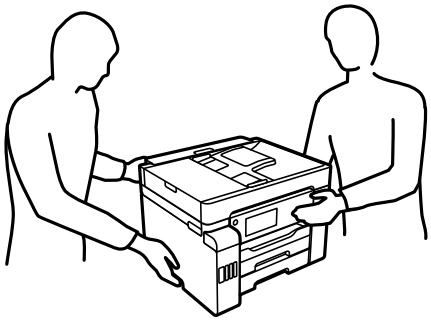

- *When carrying the printer, do not tilt it more than 10 degrees; otherwise the printer may fall.*
- *When storing or transporting the printer, place the printer in the plastic bag and fold it closed. Avoid tilting the printer, placing it vertically, or turning it upside down; otherwise ink may leak.*

Important:

- *When storing or transporting an ink bottle, do not tilt the bottle and do not subject it to impacts or temperature changes. Otherwise, ink may leak even if the cap on the ink bottle is tightened securely. Be sure to keep the ink bottle upright when tightening the cap, and take precautions to prevent ink from leaking when transporting the bottle, for example, putting the bottle in a bag.*
- *Do not put opened ink bottles in the box with printer.*

The next time you use the printer, make sure you remove the tape securing the print head and set the transportation lock to the unlocked (Print) position. If print quality has declined the next time you print, clean and align the print head.

Related Information

➡ "Checking and Cleaning the Print Head" on page 146
➡ "Aligning the Print Head (Control Panel)" on page 149

Solving Problems

The Printer Does Not Work as Expected. 169

A Message is Displayed on the LCD Screen. 226

Paper Gets Jammed. 227

It is Time to Refill the Ink. 228

It is Time to Replace the Maintenance Box. 233

Printing, Copying, Scanning, and Faxing Quality is Poor. 235

Cannot Solve Problem After Trying All Solutions. 256

The Printer Does Not Work as Expected

The Printer Does Not Turn On or Off

Power Does Not Turn On

The following causes can be considered.

The power cord is not plugged in properly to the electrical outlet.

Solutions

Make sure the power cord is securely plugged in.

The ⏻ button was not pressed for long enough.

Solutions

Hold down the ⏻ button for a little longer.

Power Does Not Turn Off

The ⏻ button was not pressed for long enough.

Solutions

Hold down the ⏻ button for a little longer. If you still cannot turn off the printer, unplug the power cord. To prevent the print head from drying out, turn the printer back on and turn it off by pressing the ⏻ button.

Power Turns Off Automatically

The Power Off Settings or Power Off Timer feature is enabled.

Solutions

- ❏ Select **Settings** > **General Settings** > **Basic Settings** > **Power Off Settings**, and then disable the **Power Off If Inactive** and **Power Off If Disconnected** settings.
- ❏ Select **Settings** > **General Settings** > **Basic Settings**, and then disable the **Power Off Timer** Setting.

Note:
*Your product may have the **Power Off Settings** or **Power Off Timer** feature depending on the location of purchase.*

Paper Does Not Feed Properly

No Paper Feeds

The following causes can be considered.

The installation location is inappropriate.

Solutions

Place the printer on a flat surface and operate in the recommended environmental conditions.

➡ "Environmental Specifications" on page 335

Unsupported paper is being used.

Solutions

Use paper supported by this printer.

➡ "Available Paper and Capacities" on page 287
➡ "Unavailable Paper Types" on page 292

Paper handling is inappropriate.

Solutions

Follow paper handling precautions.

➡ "Paper Handling Precautions" on page 30

Too many sheets are loaded in the printer.

Solutions

Do not load more than the maximum number of sheets specified for the paper.

➡ "Available Paper and Capacities" on page 287

The paper settings on the printer are incorrect.

Solutions

Make sure the paper size and paper type settings match the actual paper size and paper type loaded in the printer.

➡ "Paper Size and Type Settings" on page 30

Paper Feeds at a Slant

The following causes can be considered.

The installation location is inappropriate.

Solutions

Place the printer on a flat surface and operate in the recommended environmental conditions.

➡ "Environmental Specifications" on page 335

Unsupported paper is being used.

Solutions

Use paper supported by this printer.

➡ "Available Paper and Capacities" on page 287

➡ "Unavailable Paper Types" on page 292

Paper handling is inappropriate.

Solutions

Follow paper handling precautions.

➡ "Paper Handling Precautions" on page 30

The paper is loaded incorrectly.

Solutions

Load paper in the correct direction, and slide the edge guide against the edge of the paper.

➡ "Loading Paper" on page 31

Too many sheets are loaded in the printer.

Solutions

Do not load more than the maximum number of sheets specified for the paper.

➡ "Available Paper and Capacities" on page 287

The paper settings on the printer are incorrect.

Solutions

Make sure the paper size and paper type settings match the actual paper size and paper type loaded in the printer.

➡ "Paper Size and Type Settings" on page 30

Several Sheets of Paper are Fed at a Time

The following causes can be considered.

The installation location is inappropriate.

Solutions

Place the printer on a flat surface and operate in the recommended environmental conditions.

➡ "Environmental Specifications" on page 335

Unsupported paper is being used.

Solutions

Use paper supported by this printer.

➡ "Available Paper and Capacities" on page 287
➡ "Unavailable Paper Types" on page 292

Paper handling is inappropriate.

Solutions

Follow paper handling precautions.

➡ "Paper Handling Precautions" on page 30

The paper is moist or damp.

Solutions

Load new paper.

Static electricity is causing sheets of paper to stick to each other.

Solutions

Fan the paper before loading. If the paper still does not feed, load one sheet of paper at a time.

Too many sheets are loaded in the printer.

Solutions

Do not load more than the maximum number of sheets specified for the paper.

➡ "Available Paper and Capacities" on page 287

The paper settings on the printer are incorrect.

Solutions

Make sure the paper size and paper type settings match the actual paper size and paper type loaded in the printer.

➡ "Paper Size and Type Settings" on page 30

Multiple sheets of paper feed at the same time during manual 2-sided printing.

Solutions

Remove any paper that is loaded in the paper source before you reload the paper.

Paper Out Error Occurs

Paper is not loaded in the center of the paper tray.

Solutions

When a paper out error occurs although paper is loaded in the paper tray, reload paper in the center of the paper tray.

Original Does Not Feed in the ADF

The following causes can be considered.

Originals that are not supported by the ADF are being used.

Solutions

Use originals supported by the ADF.

➡ "ADF Specifications" on page 327

The originals are loaded incorrectly.

Solutions

Load originals in the correct direction, and slide the ADF edge guides against the edges of the originals.

Too many originals are loaded in the ADF.

Solutions

Do not load originals above the line indicated by the triangle symbol on the ADF.

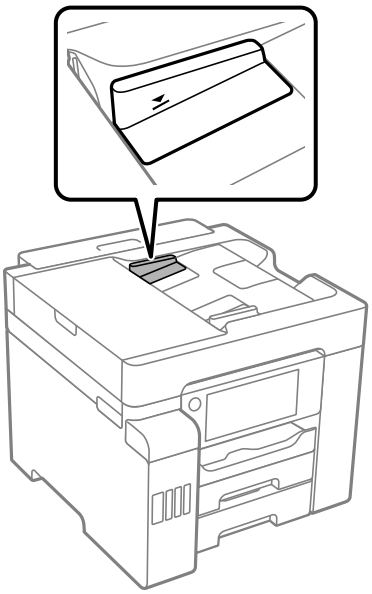

The original slips when paper dust adheres to the roller.

Solutions

Clean the inside of the ADF.

➡ "Cleaning the ADF" on page 151

Originals are not detected.

Solutions

On the screen for copy or scan, or fax, check that the ADF icon is on. If it is off, place the originals again.

Cannot Print

Cannot Print from Windows

Make sure the computer and the printer are connected correctly.

The cause and solution to the problem differ depending on whether or not they are connected.

Checking the Connection Status

Use Epson Printer Connection Checker to check the connection status for the computer and the printer. You may be able to solve the problem depending on the results of the check.

1. Double-click the **Epson Printer Connection Checker** icon on the desktop.

   Epson Printer Connection Checker starts.

   If there is no icon on the desktop, follow the methods below to start Epson Printer Connection Checker.

   ❏ Windows 10

   Click the start button, and then select **Epson Software** > **Epson Printer Connection Checker**.

   ❏ Windows 8.1/Windows 8

   Enter the application name in the search charm, and then select the displayed icon.

   ❏ Windows 7

   Click the start button, and then select **All Programs** > **Epson Software** > **Epson Printer Connection Checker**.

2. Follow the on-screen instructions to check.

   Note:
   If the printer name is not displayed, install a genuine Epson printer driver.

   "Checking if a genuine Epson printer driver is installed - Windows" on page 157

When you have identified the problem, follow the solution displayed on the screen.

When you cannot solve the problem, check the following according to your situation.

❏ The printer is not recognized over a network connection

"Cannot connect to a Network" on page 174

❏ The printer is not recognized using a USB connection

"The Printer Cannot Connect by USB (Windows)" on page 177

❏ The printer is recognized, but printing cannot be performed.

"Cannot Print Even Though a Connection has been Established (Windows)" on page 177

Cannot connect to a Network

The problem could be one of the following issues.

Something is wrong with the network devices for Wi-Fi connection.

Solutions

Turn off the devices you want to connect to the network. Wait for about 10 seconds, and then turn on the devices in the following order; wireless router, computer or smart device, and then printer. Move the printer and computer or smart device closer to the wireless router to help with radio wave communication, and then try to make network settings again.

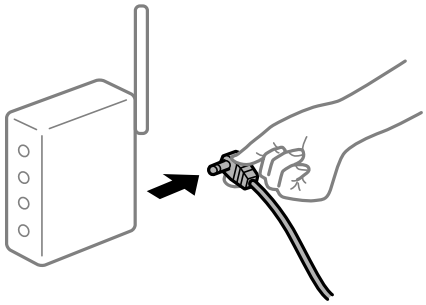

Devices cannot receive signals from the wireless router because they are too far apart.

Solutions

After moving the computer or the smart device and the printer closer to the wireless router, turn off the wireless router, and then turn it back on.

When changing the wireless router, the settings do not match the new router.

Solutions

Make the connection settings again so that they match the new wireless router.

➡ "When Replacing the Wireless Router" on page 260

The SSIDs connected from the computer or smart device and computer are different.

Solutions

When you are using multiple wireless routers at the same time or the wireless router has multiple SSIDs and devices are connected to different SSIDs, you cannot connect to the wireless router.

Connect the computer or smart device to the same SSID as the printer.

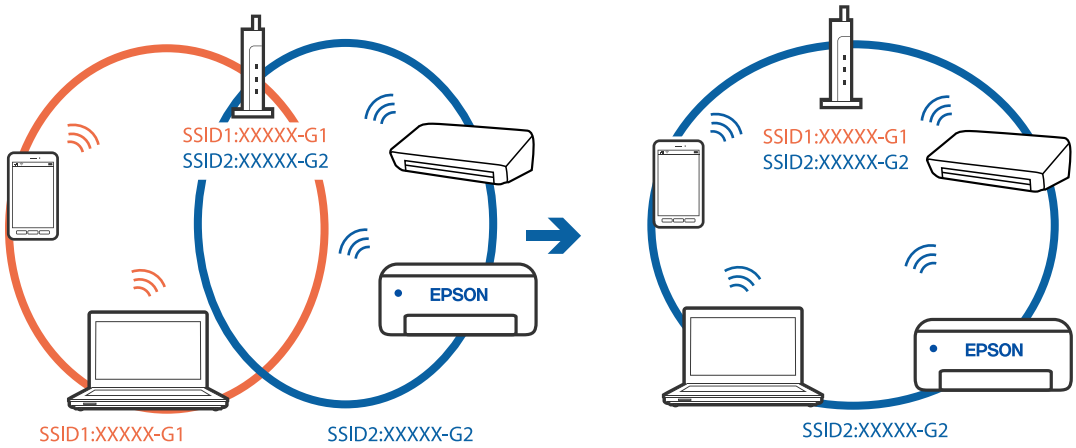

A privacy separator on the wireless router is available.

Solutions

Most wireless routers have a privacy separator feature that blocks communication between connected devices. If you cannot communicate between the printer and the computer or smart device even if they are connected to the same network, disable the privacy separator on the wireless router. See the manual provided with the wireless router for details.

The IP address is incorrectly assigned.

Solutions

If the IP address assigned to the printer is 169.254.XXX.XXX, and the subnet mask is 255.255.0.0, the IP address may not be assigned correctly.

Select **Settings** > **General Settings** > **Network Settings** > **Advanced** on the printer's control panel, and then check the IP address and the subnet mask assigned to the printer.

Restart the wireless router or reset the network settings for the printer.

➡ "Re-setting the Network Connection" on page 260

There is a problem with the network settings on the computer.

Solutions

Try accessing any website from your computer to make sure that your computer's network settings are correct. If you cannot access any website, there is a problem on the computer.

Check the network connection of the computer. See the documentation provided with the computer for details.

The printer has been connected by Ethernet using devices that support IEEE802.3az (Energy Efficient Ethernet).

Solutions

When you connect the printer by Ethernet using devices that support IEEE802.3az (Energy Efficient Ethernet), the following problems may occur depending on the hub or router that you are using.

- ❏ Connection becomes unstable, the printer is connected and disconnected again and again.
- ❏ Cannot connect to the printer.
- ❏ The communication speed becomes slow.

Follow the steps below to disable IEEE802.3az for the printer and then connect.

1. Remove the Ethernet cable connected to the computer and the printer.
2. When IEEE802.3az for the computer is enabled, disable it.

   See the documentation provided with the computer for details.
3. Connect the computer and the printer with an Ethernet cable directly.
4. On the printer, print a network connection report.

   "Printing a Network Connection Report" on page 278
5. Check the printer's IP address on the network connection report.

6. On the computer, access Web Config.
   Launch a Web browser, and then enter the printer's IP address.
   "Running Web Config on a Web Browser" on page 299
7. Select the **Network** tab > **Wired LAN**.
8. Select **OFF** for **IEEE 802.3az**.
9. Click **Next**.
10. Click **OK**.
11. Remove the Ethernet cable connected to the computer and the printer.
12. If you disabled IEEE802.3az for the computer in step 2, enable it.
13. Connect the Ethernet cables that you removed in step 1 to the computer and the printer.

If the problem still occurs, devices other than the printer may be causing the problem.

The Printer Cannot Connect by USB (Windows)

The following causes can be considered.

The USB cable is not plugged into the electrical outlet correctly.

Solutions

Connect the USB cable securely to the printer and the computer.

There is a problem with the USB hub.

Solutions

If you are using a USB hub, try to connect the printer directly to the computer.

There is a problem with the USB cable or the USB inlet.

Solutions

If the USB cable cannot be recognized, change the port, or change the USB cable.

Cannot Print Even Though a Connection has been Established (Windows)

The following causes can be considered.

There is a problem with the software or data.

Solutions

- ❏ Make sure that a genuine Epson printer driver (EPSON XXXXX) is installed. If a genuine Epson printer driver is not installed, the available functions are limited. We recommend using a genuine Epson printer driver.
- ❏ If you are printing a large data size image, the computer may run out of memory. Print the image at a lower resolution or a smaller size.

❏ If you have tried all of the solutions and have not solved the problem, try uninstalling and then reinstalling the printer driver.

❏ You may be able to clear the problem by updating the software to the latest version. To check the software status, use the software update tool.

➡ "Checking if a genuine Epson printer driver is installed - Windows" on page 157
➡ "Checking if a genuine Epson printer driver is installed - Mac OS" on page 157
➡ "Installing or Uninstalling Applications Separately" on page 155
➡ "Updating Applications and Firmware" on page 160

There is a problem with the printer's status.

Solutions

Click **EPSON Status Monitor 3** on the printer driver's **Maintenance** tab, and then check the printer status. If **EPSON Status Monitor 3** is disabled, click **Extended Settings** on the **Maintenance** tab, and then select **Enable EPSON Status Monitor 3**.

There is still a job waiting to be printed.

Solutions

Click **Print Queue** on the printer driver's **Maintenance** tab. If unnecessary data remains, select **Cancel all documents** from the **Printer** menu.

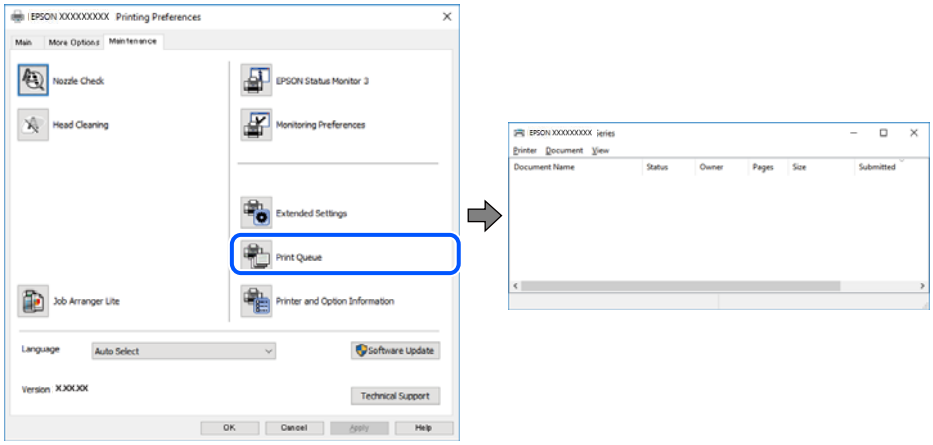

The printer is pending or offline.

Solutions

Click **Print Queue** on the printer driver's **Maintenance** tab.

If the printer is offline or pending, clear the offline or pending setting from the **Printer** menu.

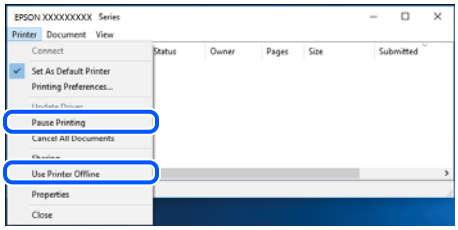

The printer is not selected as the default printer.

Solutions

Right-click the printer icon in **Control Panel** > **View devices and printers** (or **Printers**, **Printers and Faxes**) and click **Set as default printer**.

Note:
If there are multiple printer icons, see the following to select the correct printer.

Example)

USB connection: EPSON XXXX Series

Network connection: EPSON XXXX Series (network)

If you install the printer driver multiple times, copies of the printer driver may be created. If copies such as "EPSON XXXX Series (copy 1)" are created, right-click the copied driver icon, and then click **Remove Device**.

The printer port is not set correctly.

Solutions

Click **Print Queue** on the printer driver's **Maintenance** tab.

Make sure the printer port is set correctly as shown below in **Property** > **Port** from the **Printer** menu.

USB connection: **USBXXX**, Network connection: **EpsonNet Print Port**

Suddenly the Printer Cannot Print over a Network Connection

The problem could be one of the following issues.

The network environment has been changed.

Solutions

When you have changed the network environment, such as the wireless router or provider, try making network settings for the printer again.

Connect the computer or smart device to the same SSID as the printer.

➡ "Re-setting the Network Connection" on page 260

Something is wrong with the network devices for Wi-Fi connection.

Solutions

Turn off the devices you want to connect to the network. Wait for about 10 seconds, and then turn on the devices in the following order; wireless router, computer or smart device, and then printer. Move the

printer and computer or smart device closer to the wireless router to help with radio wave communication, and then try to make network settings again.

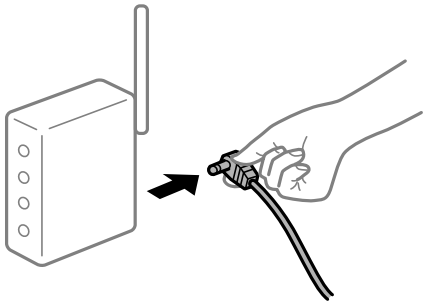

The printer is not connected to the network.

Solutions

Select **Settings** > **General Settings** > **Network Settings** > **Connection Check**, and then print the network connection report. If the report shows that the network connection failed, check the network connection report and then follow the printed solutions.

➡ "Printing a Network Connection Report" on page 278

There is a problem with the network settings on the computer.

Solutions

Try accessing any website from your computer to make sure that your computer's network settings are correct. If you cannot access any website, there is a problem on the computer.

Check the network connection of the computer. See the documentation provided with the computer for details.

There is still a job waiting to be printed.

Solutions

Click **Print Queue** on the printer driver's **Maintenance** tab. If unnecessary data remains, select **Cancel all documents** from the **Printer** menu.

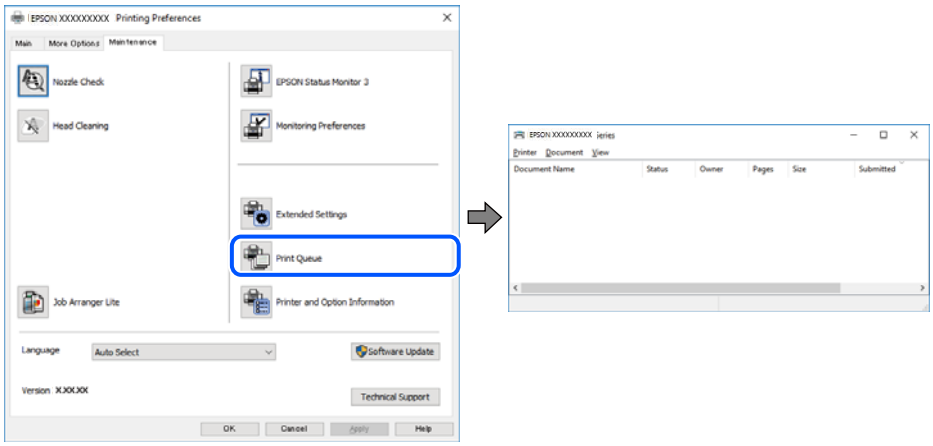

The printer is pending or offline.

Solutions

Click **Print Queue** on the printer driver's **Maintenance** tab.

If the printer is offline or pending, clear the offline or pending setting from the **Printer** menu.

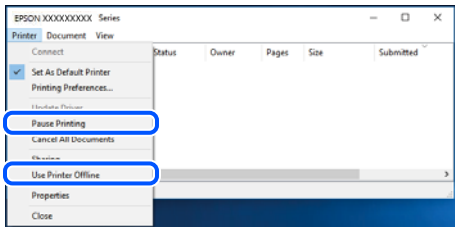

The printer is not selected as the default printer.

Solutions

Right-click the printer icon in **Control Panel** > **View devices and printers** (or **Printers**, **Printers and Faxes**) and click **Set as default printer**.

Note:
If there are multiple printer icons, see the following to select the correct printer.

Example)

USB connection: EPSON XXXX Series

Network connection: EPSON XXXX Series (network)

If you install the printer driver multiple times, copies of the printer driver may be created. If copies such as "EPSON XXXX Series (copy 1)" are created, right-click the copied driver icon, and then click **Remove Device**.

The printer port is not set correctly.

Solutions

Click **Print Queue** on the printer driver's **Maintenance** tab.

Make sure the printer port is set correctly as shown below in **Property** > **Port** from the **Printer** menu.

USB connection: **USBXXX**, Network connection: **EpsonNet Print Port**

Cannot Print from Mac OS

Make sure the computer and the printer are connected correctly.

The cause and solution to the problem differ depending on whether or not they are connected.

Checking the Connection Status

Use EPSON Status Monitor to check the connection status for the computer and the printer.

1. Select **System Preferences** from the Apple menu > **Printers & Scanners** (or **Print & Scan**, **Print & Fax**), and then select the printer.

2. Click **Options & Supplies** > **Utility** > **Open Printer Utility**.

3. Click **EPSON Status Monitor**.

When the remaining ink levels are displayed, a connection has been successfully established between the computer and the printer.

Check the following if a connection has not been established.

❏ The printer is not recognized over a network connection
"Cannot connect to a Network" on page 182

❏ The printer is not recognized using a USB connection
"The Printer Cannot Connect by USB (Mac OS)" on page 185

Check the following if a connection has been established.

❏ The printer is recognized, but printing cannot be performed.
"Cannot Print Even Though a Connection has been Established (Mac OS)" on page 185

Cannot connect to a Network

The problem could be one of the following issues.

Something is wrong with the network devices for Wi-Fi connection.

Solutions

Turn off the devices you want to connect to the network. Wait for about 10 seconds, and then turn on the devices in the following order; wireless router, computer or smart device, and then printer. Move the printer and computer or smart device closer to the wireless router to help with radio wave communication, and then try to make network settings again.

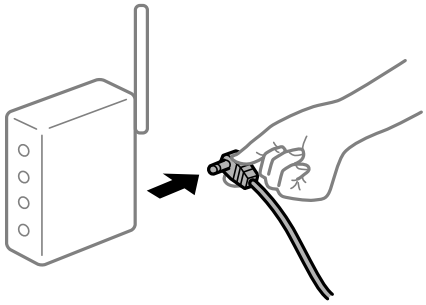

Devices cannot receive signals from the wireless router because they are too far apart.

Solutions

After moving the computer or the smart device and the printer closer to the wireless router, turn off the wireless router, and then turn it back on.

When changing the wireless router, the settings do not match the new router.

Solutions

Make the connection settings again so that they match the new wireless router.

➡ "When Replacing the Wireless Router" on page 260

The SSIDs connected from the computer or smart device and computer are different.

Solutions

When you are using multiple wireless routers at the same time or the wireless router has multiple SSIDs and devices are connected to different SSIDs, you cannot connect to the wireless router.

Connect the computer or smart device to the same SSID as the printer.

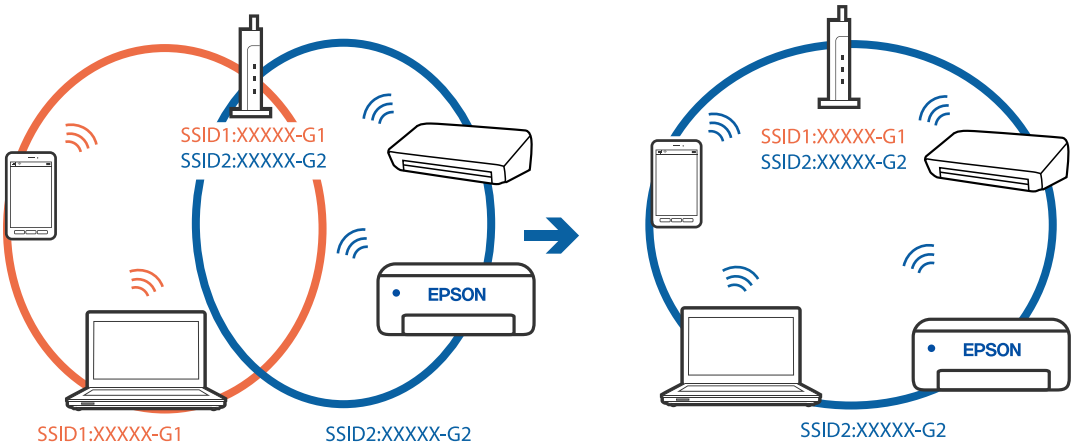

A privacy separator on the wireless router is available.

Solutions

Most wireless routers have a privacy separator feature that blocks communication between connected devices. If you cannot communicate between the printer and the computer or smart device even if they are connected to the same network, disable the privacy separator on the wireless router. See the manual provided with the wireless router for details.

The IP address is incorrectly assigned.

Solutions

If the IP address assigned to the printer is 169.254.XXX.XXX, and the subnet mask is 255.255.0.0, the IP address may not be assigned correctly.

Select **Settings** > **General Settings** > **Network Settings** > **Advanced** on the printer's control panel, and then check the IP address and the subnet mask assigned to the printer.

Restart the wireless router or reset the network settings for the printer.

➡ "Re-setting the Network Connection" on page 260

There is a problem with the network settings on the computer.

Solutions

Try accessing any website from your computer to make sure that your computer's network settings are correct. If you cannot access any website, there is a problem on the computer.

Check the network connection of the computer. See the documentation provided with the computer for details.

The device connected to the USB 3.0 port causes radio frequency interference.

Solutions

When you connect a device to the USB 3.0 port on a Mac, radio frequency interference may occur. Try the following if you cannot connect to wireless LAN (Wi-Fi) or if operations become unstable.

❏ Place the device that is connected to the USB 3.0 port further away from the computer.

❏ Connect to the SSID for the 5 GHz range.

See the following to connect the printer to the SSID.

➡ "Making Wi-Fi Settings by Entering the SSID and Password" on page 264

The printer has been connected by Ethernet using devices that support IEEE802.3az (Energy Efficient Ethernet).

Solutions

When you connect the printer by Ethernet using devices that support IEEE802.3az (Energy Efficient Ethernet), the following problems may occur depending on the hub or router that you are using.

❏ Connection becomes unstable, the printer is connected and disconnected again and again.

❏ Cannot connect to the printer.

❏ The communication speed becomes slow.

Follow the steps below to disable IEEE802.3az for the printer and then connect.

1. Remove the Ethernet cable connected to the computer and the printer.
2. When IEEE802.3az for the computer is enabled, disable it.

   See the documentation provided with the computer for details.
3. Connect the computer and the printer with an Ethernet cable directly.
4. On the printer, print a network connection report.

   "Printing a Network Connection Report" on page 278
5. Check the printer's IP address on the network connection report.
6. On the computer, access Web Config.

   Launch a Web browser, and then enter the printer's IP address.

   "Running Web Config on a Web Browser" on page 299
7. Select the **Network** tab > **Wired LAN**.
8. Select **OFF** for **IEEE 802.3az**.
9. Click **Next**.
10. Click **OK**.
11. Remove the Ethernet cable connected to the computer and the printer.

12. If you disabled IEEE802.3az for the computer in step 2, enable it.

13. Connect the Ethernet cables that you removed in step 1 to the computer and the printer.

If the problem still occurs, devices other than the printer may be causing the problem.

The Printer Cannot Connect by USB (Mac OS)

The following causes can be considered.

The USB cable is not plugged into the electrical outlet correctly.

Solutions

Connect the USB cable securely to the printer and the computer.

There is a problem with the USB hub.

Solutions

If you are using a USB hub, try to connect the printer directly to the computer.

There is a problem with the USB cable or the USB inlet.

Solutions

If the USB cable cannot be recognized, change the port, or change the USB cable.

Cannot Print Even Though a Connection has been Established (Mac OS)

The following causes can be considered.

There is a problem with the software or data.

Solutions

- ❏ Make sure that a genuine Epson printer driver (EPSON XXXXX) is installed. If a genuine Epson printer driver is not installed, the available functions are limited. We recommend using a genuine Epson printer driver.
- ❏ If you are printing a large data size image, the computer may run out of memory. Print the image at a lower resolution or a smaller size.
- ❏ If you have tried all of the solutions and have not solved the problem, try uninstalling and then reinstalling the printer driver.
- ❏ You may be able to clear the problem by updating the software to the latest version. To check the software status, use the software update tool.

➡ "Checking if a genuine Epson printer driver is installed - Windows" on page 157
➡ "Checking if a genuine Epson printer driver is installed - Mac OS" on page 157
➡ "Installing or Uninstalling Applications Separately" on page 155
➡ "Updating Applications and Firmware" on page 160

There is a problem with the status of the printer.

Solutions

Make sure the printer status is not **Pause**.

Select **System Preferences** from the **Apple** menu > **Printers & Scanners** (or **Print & Scan**, **Print & Fax**), and then double-click the printer. If the printer is paused, click **Resume**.

User feature restrictions are enabled for the printer.

Solutions

The printer may not print when the user feature restriction is enabled. Contact your printer administrator.

Suddenly the Printer Cannot Print over a Network Connection

The problem could be one of the following issues.

The network environment has been changed.

Solutions

When you have changed the network environment, such as the wireless router or provider, try making network settings for the printer again.

Connect the computer or smart device to the same SSID as the printer.

➡ "Re-setting the Network Connection" on page 260

Something is wrong with the network devices for Wi-Fi connection.

Solutions

Turn off the devices you want to connect to the network. Wait for about 10 seconds, and then turn on the devices in the following order; wireless router, computer or smart device, and then printer. Move the printer and computer or smart device closer to the wireless router to help with radio wave communication, and then try to make network settings again.

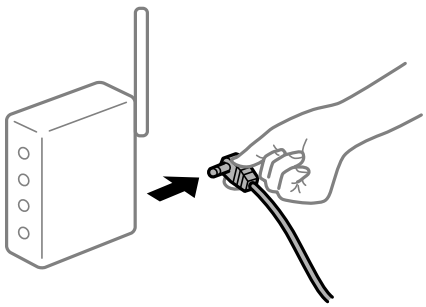

The printer is not connected to the network.

Solutions

Select **Settings** > **General Settings** > **Network Settings** > **Connection Check**, and then print the network connection report. If the report shows that the network connection failed, check the network connection report and then follow the printed solutions.

➡ "Printing a Network Connection Report" on page 278

There is a problem with the network settings on the computer.

Solutions

Try accessing any website from your computer to make sure that your computer's network settings are correct. If you cannot access any website, there is a problem on the computer.

Check the network connection of the computer. See the documentation provided with the computer for details.

Cannot Print from Smart Device

Make sure the smart device and the printer are connected correctly.

The cause and solution to the problem differ depending on whether or not they are connected.

Checking the Connection Status

Use Epson iPrint to check the connection status for the smart device and the printer.

See the following to install Epson iPrint if it is not already installed.

"Application for Printing Easily from a Smart Device (Epson iPrint)" on page 296

1. On the smart device, start Epson iPrint.

2. Check that the printer name is displayed on the home screen.

   When the printer name is displayed, a connection has been successfully established between the smart device and the printer.

   If the following are displayed, a connection has not been established between the smart device and the printer.

   ❏ Printer is not selected.

   ❏ Communication error.

Check the following if a connection has not been established.

❏ The printer is not recognized over a network connection

"Cannot connect to a Network" on page 187

Check the following if a connection has been established.

❏ The printer is recognized, but printing cannot be performed.

"Cannot Print Even Though a Connection has been Established (iOS)" on page 189

Cannot connect to a Network

The problem could be one of the following issues.

Something is wrong with the network devices for Wi-Fi connection.

Solutions

Turn off the devices you want to connect to the network. Wait for about 10 seconds, and then turn on the devices in the following order; wireless router, computer or smart device, and then printer. Move the

printer and computer or smart device closer to the wireless router to help with radio wave communication, and then try to make network settings again.

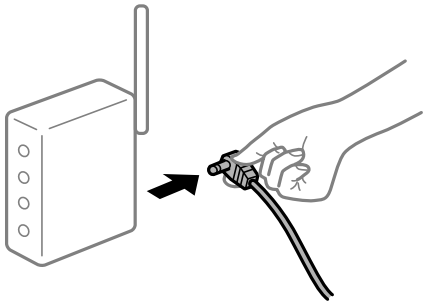

Devices cannot receive signals from the wireless router because they are too far apart.

Solutions

After moving the computer or the smart device and the printer closer to the wireless router, turn off the wireless router, and then turn it back on.

When changing the wireless router, the settings do not match the new router.

Solutions

Make the connection settings again so that they match the new wireless router.

➡ "When Replacing the Wireless Router" on page 260

The SSIDs connected from the computer or smart device and computer are different.

Solutions

When you are using multiple wireless routers at the same time or the wireless router has multiple SSIDs and devices are connected to different SSIDs, you cannot connect to the wireless router.

Connect the computer or smart device to the same SSID as the printer.

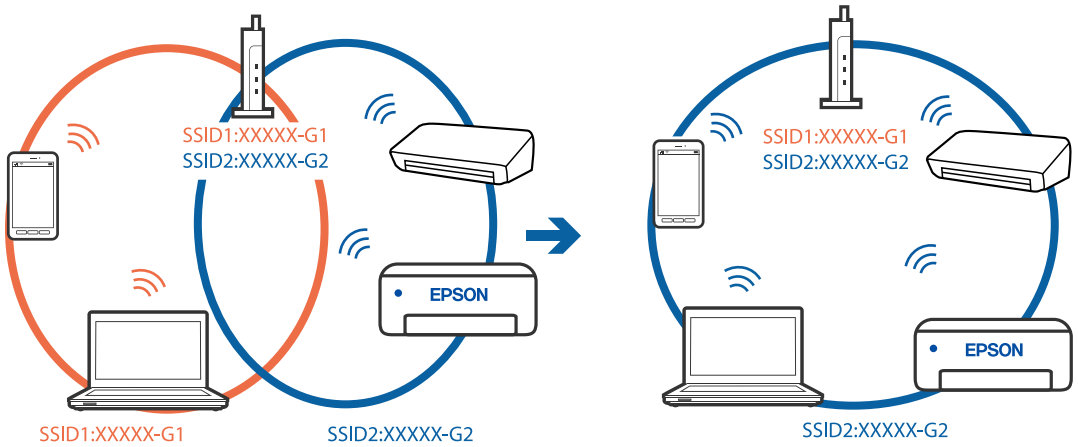

A privacy separator on the wireless router is available.

Solutions

Most wireless routers have a privacy separator feature that blocks communication between connected devices. If you cannot communicate between the printer and the computer or smart device even if they

are connected to the same network, disable the privacy separator on the wireless router. See the manual provided with the wireless router for details.

The IP address is incorrectly assigned.

Solutions

If the IP address assigned to the printer is 169.254.XXX.XXX, and the subnet mask is 255.255.0.0, the IP address may not be assigned correctly.

Select **Settings** > **General Settings** > **Network Settings** > **Advanced** on the printer's control panel, and then check the IP address and the subnet mask assigned to the printer.

Restart the wireless router or reset the network settings for the printer.

➡ "Re-setting the Network Connection" on page 260

There is a problem with the network settings on the smart device.

Solutions

Try accessing any website from your smart device to make sure that your smart device's network settings are correct. If you cannot access any website, there is a problem on the smart device.

Check the network connection of the computer. See the documentation provided with the smart device for details.

Cannot Print Even Though a Connection has been Established (iOS)

The following causes can be considered.

Paper Setup Auto Display is disabled.

Solutions

Enable **Paper Setup Auto Display** in the following menu.

Settings > **General Settings** > **Printer Settings** > **Paper Source Settings** > **Paper Setup Auto Display**

AirPrint is disabled.

Solutions

Enable the AirPrint setting on Web Config.

➡ "Application for Configuring Printer Operations (Web Config)" on page 299

Suddenly the Printer Cannot Print over a Network Connection

The problem could be one of the following issues.

The network environment has been changed.

Solutions

When you have changed the network environment, such as the wireless router or provider, try making network settings for the printer again.

Connect the computer or smart device to the same SSID as the printer.

➡ "Re-setting the Network Connection" on page 260

Something is wrong with the network devices for Wi-Fi connection.

Solutions

Turn off the devices you want to connect to the network. Wait for about 10 seconds, and then turn on the devices in the following order; wireless router, computer or smart device, and then printer. Move the printer and computer or smart device closer to the wireless router to help with radio wave communication, and then try to make network settings again.

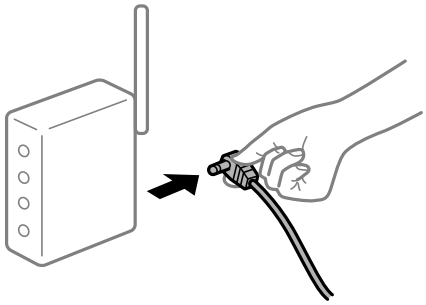

The printer is not connected to the network.

Solutions

Select **Settings** > **General Settings** > **Network Settings** > **Connection Check**, and then print the network connection report. If the report shows that the network connection failed, check the network connection report and then follow the printed solutions.

➡ "Printing a Network Connection Report" on page 278

There is a problem with the network settings on the smart device.

Solutions

Try accessing any website from your smart device to make sure that your smart device's network settings are correct. If you cannot access any website, there is a problem on the smart device.

Check the network connection of the computer. See the documentation provided with the smart device for details.

Cannot Start Scanning

Cannot Start Scanning from Windows

Make sure the computer and the printer are connected correctly.

The cause and solution to the problem differ depending on whether or not they are connected.

Checking the Connection Status

Use Epson Printer Connection Checker to check the connection status for the computer and the printer. You may be able to solve the problem depending on the results of the check.

1. Double-click the **Epson Printer Connection Checker** icon on the desktop.

   Epson Printer Connection Checker starts.

If there is no icon on the desktop, follow the methods below to start Epson Printer Connection Checker.

❏ Windows 10

Click the start button, and then select **Epson Software** > **Epson Printer Connection Checker**.

❏ Windows 8.1/Windows 8

Enter the application name in the search charm, and then select the displayed icon.

❏ Windows 7

Click the start button, and then select **All Programs** > **Epson Software** > **Epson Printer Connection Checker**.

2. Follow the on-screen instructions to check.

Note:
If the printer name is not displayed, install a genuine Epson printer driver.

"Checking if a genuine Epson printer driver is installed - Windows" on page 157

When you have identified the problem, follow the solution displayed on the screen.

When you cannot solve the problem, check the following according to your situation.

❏ The printer is not recognized over a network connection

"Cannot connect to a Network" on page 191

❏ The printer is not recognized using a USB connection

"The Printer Cannot Connect by USB (Windows)" on page 177

❏ The printer is recognized, but scanning cannot be performed.

"Cannot Scan Even Though a Connection has been Correctly Established (Windows)" on page 194

Cannot connect to a Network

The problem could be one of the following issues.

Something is wrong with the network devices for Wi-Fi connection.

Solutions

Turn off the devices you want to connect to the network. Wait for about 10 seconds, and then turn on the devices in the following order; wireless router, computer or smart device, and then printer. Move the printer and computer or smart device closer to the wireless router to help with radio wave communication, and then try to make network settings again.

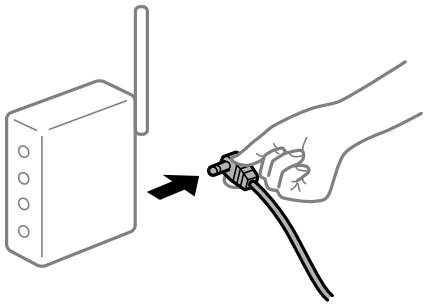

Devices cannot receive signals from the wireless router because they are too far apart.

Solutions

After moving the computer or the smart device and the printer closer to the wireless router, turn off the wireless router, and then turn it back on.

When changing the wireless router, the settings do not match the new router.

Solutions

Make the connection settings again so that they match the new wireless router.

➡ "When Replacing the Wireless Router" on page 260

The SSIDs connected from the computer or smart device and computer are different.

Solutions

When you are using multiple wireless routers at the same time or the wireless router has multiple SSIDs and devices are connected to different SSIDs, you cannot connect to the wireless router.

Connect the computer or smart device to the same SSID as the printer.

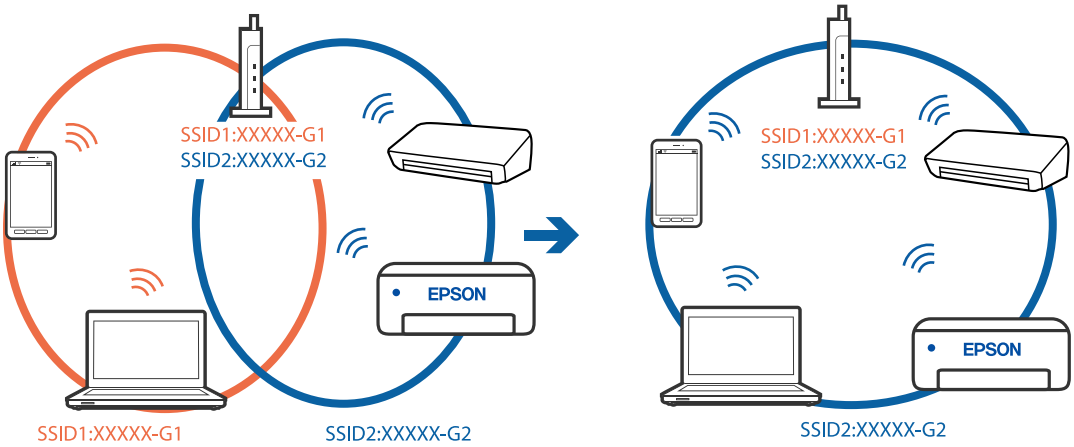

A privacy separator on the wireless router is available.

Solutions

Most wireless routers have a privacy separator feature that blocks communication between connected devices. If you cannot communicate between the printer and the computer or smart device even if they are connected to the same network, disable the privacy separator on the wireless router. See the manual provided with the wireless router for details.

The IP address is incorrectly assigned.

Solutions

If the IP address assigned to the printer is 169.254.XXX.XXX, and the subnet mask is 255.255.0.0, the IP address may not be assigned correctly.

Select **Settings** > **General Settings** > **Network Settings** > **Advanced** on the printer's control panel, and then check the IP address and the subnet mask assigned to the printer.

Restart the wireless router or reset the network settings for the printer.

➡ "Re-setting the Network Connection" on page 260

There is a problem with the network settings on the computer.

Solutions

Try accessing any website from your computer to make sure that your computer's network settings are correct. If you cannot access any website, there is a problem on the computer.

Check the network connection of the computer. See the documentation provided with the computer for details.

The printer has been connected by Ethernet using devices that support IEEE802.3az (Energy Efficient Ethernet).

Solutions

When you connect the printer by Ethernet using devices that support IEEE802.3az (Energy Efficient Ethernet), the following problems may occur depending on the hub or router that you are using.

- ❏ Connection becomes unstable, the printer is connected and disconnected again and again.
- ❏ Cannot connect to the printer.
- ❏ The communication speed becomes slow.

Follow the steps below to disable IEEE802.3az for the printer and then connect.

1. Remove the Ethernet cable connected to the computer and the printer.
2. When IEEE802.3az for the computer is enabled, disable it.

   See the documentation provided with the computer for details.
3. Connect the computer and the printer with an Ethernet cable directly.
4. On the printer, print a network connection report.

   "Printing a Network Connection Report" on page 278
5. Check the printer's IP address on the network connection report.
6. On the computer, access Web Config.

   Launch a Web browser, and then enter the printer's IP address.

   "Running Web Config on a Web Browser" on page 299
7. Select the **Network** tab > **Wired LAN**.
8. Select **OFF** for **IEEE 802.3az**.
9. Click **Next**.
10. Click **OK**.
11. Remove the Ethernet cable connected to the computer and the printer.
12. If you disabled IEEE802.3az for the computer in step 2, enable it.
13. Connect the Ethernet cables that you removed in step 1 to the computer and the printer.

If the problem still occurs, devices other than the printer may be causing the problem.

The Printer Cannot Connect by USB (Windows)

The following causes can be considered.

The USB cable is not plugged into the electrical outlet correctly.

Connect the USB cable securely to the printer and the computer.

There is a problem with the USB hub.

If you are using a USB hub, try to connect the printer directly to the computer.

There is a problem with the USB cable or the USB inlet.

If the USB cable cannot be recognized, change the port, or change the USB cable.

Cannot Scan Even Though a Connection has been Correctly Established (Windows)

Scanning at a high resolution over a network.

Try scanning at a lower resolution.

Cannot Start Scanning from Mac OS

Make sure the computer and the printer are connected correctly.

The cause and solution to the problem differ depending on whether or not they are connected.

Checking the Connection Status

Use EPSON Status Monitor to check the connection status for the computer and the printer.

1. Select **System Preferences** from the Apple menu > **Printers & Scanners** (or **Print & Scan**, **Print & Fax**), and then select the printer.
2. Click **Options & Supplies** > **Utility** > **Open Printer Utility**.
3. Click **EPSON Status Monitor**.

When the remaining ink levels are displayed, a connection has been successfully established between the computer and the printer.

Check the following if a connection has not been established.

❏ The printer is not recognized over a network connection

"Cannot connect to a Network" on page 195

❏ The printer is not recognized using a USB connection

"The Printer Cannot Connect by USB (Mac OS)" on page 185

Check the following if a connection has been established.

❏ The printer is recognized, but scanning cannot be performed.

"Cannot Scan Even Though a Connection has been Correctly Established (Mac OS)" on page 198

Cannot connect to a Network

The problem could be one of the following issues.

Something is wrong with the network devices for Wi-Fi connection.

Solutions

Turn off the devices you want to connect to the network. Wait for about 10 seconds, and then turn on the devices in the following order; wireless router, computer or smart device, and then printer. Move the printer and computer or smart device closer to the wireless router to help with radio wave communication, and then try to make network settings again.

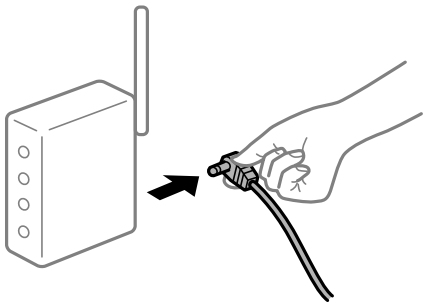

Devices cannot receive signals from the wireless router because they are too far apart.

Solutions

After moving the computer or the smart device and the printer closer to the wireless router, turn off the wireless router, and then turn it back on.

When changing the wireless router, the settings do not match the new router.

Solutions

Make the connection settings again so that they match the new wireless router.

➡ "When Replacing the Wireless Router" on page 260

The SSIDs connected from the computer or smart device and computer are different.

Solutions

When you are using multiple wireless routers at the same time or the wireless router has multiple SSIDs and devices are connected to different SSIDs, you cannot connect to the wireless router.

Connect the computer or smart device to the same SSID as the printer.

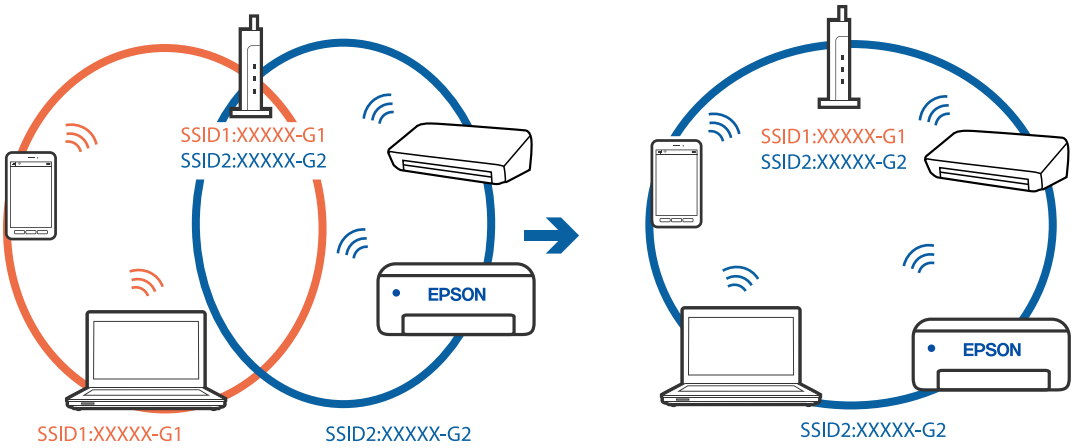

A privacy separator on the wireless router is available.

Solutions

Most wireless routers have a privacy separator feature that blocks communication between connected devices. If you cannot communicate between the printer and the computer or smart device even if they are connected to the same network, disable the privacy separator on the wireless router. See the manual provided with the wireless router for details.

The IP address is incorrectly assigned.

Solutions

If the IP address assigned to the printer is 169.254.XXX.XXX, and the subnet mask is 255.255.0.0, the IP address may not be assigned correctly.

Select **Settings** > **General Settings** > **Network Settings** > **Advanced** on the printer's control panel, and then check the IP address and the subnet mask assigned to the printer.

Restart the wireless router or reset the network settings for the printer.

➡ "Re-setting the Network Connection" on page 260

There is a problem with the network settings on the computer.

Solutions

Try accessing any website from your computer to make sure that your computer's network settings are correct. If you cannot access any website, there is a problem on the computer.

Check the network connection of the computer. See the documentation provided with the computer for details.

The device connected to the USB 3.0 port causes radio frequency interference.

Solutions

When you connect a device to the USB 3.0 port on a Mac, radio frequency interference may occur. Try the following if you cannot connect to wireless LAN (Wi-Fi) or if operations become unstable.

❏ Place the device that is connected to the USB 3.0 port further away from the computer.

❏ Connect to the SSID for the 5 GHz range.

See the following to connect the printer to the SSID.

➡ "Making Wi-Fi Settings by Entering the SSID and Password" on page 264

The printer has been connected by Ethernet using devices that support IEEE802.3az (Energy Efficient Ethernet).

Solutions

When you connect the printer by Ethernet using devices that support IEEE802.3az (Energy Efficient Ethernet), the following problems may occur depending on the hub or router that you are using.

- ❏ Connection becomes unstable, the printer is connected and disconnected again and again.
- ❏ Cannot connect to the printer.
- ❏ The communication speed becomes slow.

Follow the steps below to disable IEEE802.3az for the printer and then connect.

1. Remove the Ethernet cable connected to the computer and the printer.
2. When IEEE802.3az for the computer is enabled, disable it.

   See the documentation provided with the computer for details.
3. Connect the computer and the printer with an Ethernet cable directly.
4. On the printer, print a network connection report.

   "Printing a Network Connection Report" on page 278
5. Check the printer's IP address on the network connection report.
6. On the computer, access Web Config.

   Launch a Web browser, and then enter the printer's IP address.

   "Running Web Config on a Web Browser" on page 299
7. Select the **Network** tab > **Wired LAN**.
8. Select **OFF** for **IEEE 802.3az**.
9. Click **Next**.
10. Click **OK**.
11. Remove the Ethernet cable connected to the computer and the printer.
12. If you disabled IEEE802.3az for the computer in step 2, enable it.
13. Connect the Ethernet cables that you removed in step 1 to the computer and the printer.

If the problem still occurs, devices other than the printer may be causing the problem.

The Printer Cannot Connect by USB (Mac OS)

The following causes can be considered.

The USB cable is not plugged into the electrical outlet correctly.

Connect the USB cable securely to the printer and the computer.

There is a problem with the USB hub.

If you are using a USB hub, try to connect the printer directly to the computer.

There is a problem with the USB cable or the USB inlet.

If the USB cable cannot be recognized, change the port, or change the USB cable.

Cannot Scan Even Though a Connection has been Correctly Established (Mac OS)

Scanning at a high resolution over a network.

Try scanning at a lower resolution.

Cannot Start Scanning from Smart Device

Make sure the smart device and the printer are connected correctly.

The cause and solution to the problem differ depending on whether or not they are connected.

Checking the Connection Status

Use Epson iPrint to check the connection status for the smart device and the printer.

See the following to install Epson iPrint if it is not already installed.

"Application for Printing Easily from a Smart Device (Epson iPrint)" on page 296

1. On the smart device, start Epson iPrint.

2. Check that the printer name is displayed on the home screen.

   When the printer name is displayed, a connection has been successfully established between the smart device and the printer.

   If the following are displayed, a connection has not been established between the smart device and the printer.

   ❏ Printer is not selected.

   ❏ Communication error.

Check the following if a connection has not been established.

❏ The printer is not recognized over a network connection

"Cannot connect to a Network" on page 199

Check the following if a connection has been established.

❏ The printer is recognized, but scanning cannot be performed.

"Cannot Print Even Though a Connection has been Established (iOS)" on page 189

Cannot connect to a Network

The problem could be one of the following issues.

Something is wrong with the network devices for Wi-Fi connection.

Solutions

Turn off the devices you want to connect to the network. Wait for about 10 seconds, and then turn on the devices in the following order; wireless router, computer or smart device, and then printer. Move the printer and computer or smart device closer to the wireless router to help with radio wave communication, and then try to make network settings again.

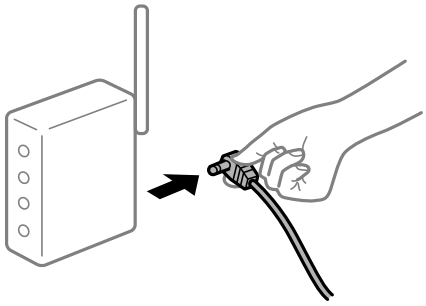

Devices cannot receive signals from the wireless router because they are too far apart.

Solutions

After moving the computer or the smart device and the printer closer to the wireless router, turn off the wireless router, and then turn it back on.

When changing the wireless router, the settings do not match the new router.

Solutions

Make the connection settings again so that they match the new wireless router.

➡ "When Replacing the Wireless Router" on page 260

The SSIDs connected from the computer or smart device and computer are different.

Solutions

When you are using multiple wireless routers at the same time or the wireless router has multiple SSIDs and devices are connected to different SSIDs, you cannot connect to the wireless router.

Connect the computer or smart device to the same SSID as the printer.

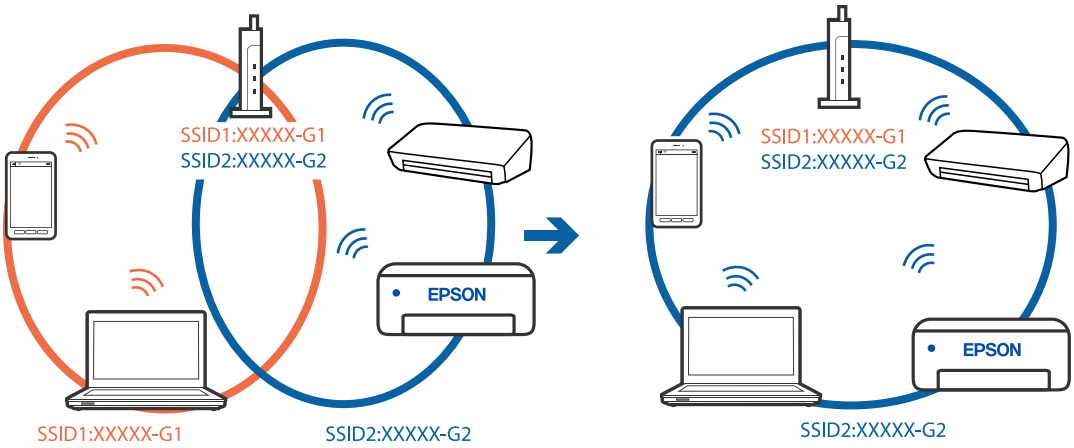

A privacy separator on the wireless router is available.

Solutions

Most wireless routers have a privacy separator feature that blocks communication between connected devices. If you cannot communicate between the printer and the computer or smart device even if they are connected to the same network, disable the privacy separator on the wireless router. See the manual provided with the wireless router for details.

The IP address is incorrectly assigned.

Solutions

If the IP address assigned to the printer is 169.254.XXX.XXX, and the subnet mask is 255.255.0.0, the IP address may not be assigned correctly.

Select **Settings** > **General Settings** > **Network Settings** > **Advanced** on the printer's control panel, and then check the IP address and the subnet mask assigned to the printer.

Restart the wireless router or reset the network settings for the printer.

➡ "Re-setting the Network Connection" on page 260

There is a problem with the network settings on the smart device.

Solutions

Try accessing any website from your smart device to make sure that your smart device's network settings are correct. If you cannot access any website, there is a problem on the smart device.

Check the network connection of the computer. See the documentation provided with the smart device for details.

Cannot Save Scanned Images to the Shared Folder

Messages are Displayed on the Control Panel

When error messages are displayed on the control panel, check the message itself or the following list to solve the problems.

Messages	Solutions
DNS error. Check DNS settings.	Cannnot connect to the computer. Check the following. ❏ Make sure that the address in the contacts list on the printer and the address of the shared folder are the same. ❏ If the IP address of the computer is static and is set manually, change the computer name in the network path to the IP address. Example: \\EPSON02\SCAN to \\192.168.xxx.xxx\SCAN ❏ Make sure that the computer is turned on and does not sleep. If the computer sleeps, you cannot save scanned images to the shared folder. ❏ Temporarily disable the computer's Firewall and security software. If this clears the error, check the settings in the security software. ❏ If **Public network** is selected as the network place, you cannot save the scanned images to the shared folder. Set the forward settings for each port. ❏ If you are using a laptop computer and the IP address is set as DHCP, the IP address may change when reconnecting to the network. Obtain the IP address again. ❏ Make sure the DNS setting is correct. Contact your network administrator about the DNS settings. ❏ The computer name and the IP address may differ when the management table of the DNS server is not updated. Contact your DNS server administrator.
Authentication error. Check the authentication method, authenticated account, and authenticated password.	Make sure the user name and the password are correct on the computer and the contacts on the printer. Also, make sure that the password has not expired.
Communication error. Check the Wi-Fi/ network connection.	Cannot communicate with a network folder that is registered on the contacts list. Check the following. ❏ Make sure that **Use Microsoft network sharing** is enabled on the Web Config. Select **Network** > **MS Network** on the Web Config. ❏ Make sure that the address in the contacts list on the printer and the address of the shared folder are the same. ❏ Access rights for the user in the contacts list should be added on the **Sharing** tab and the **Security** tab of the shared folder's properties. Also, the permissions for the user should be set to "allowed".
The file name is already in use. Rename the file and scan again.	Change the file name settings. Otherwise, move or delete the files, or change the file name on the shared folder.
Scanned file(s) are too large. Only XX page(s) have been sent. Check if the destination has enough space.	There is not enough disk space on the computer. Increase the free space on the computer.

Checking the Point where the Error Occurred

Solutions

When saving scanned images to the shared folder, saving process proceeds as following. You can then check the point where the error occurred.

Items	Operation	Error Messages
Connecting	Connect to the computer from the printer.	DNS error. Check DNS settings.

Items	Operation	Error Messages
Logging on to the computer	Log on to the computer with the user name and the password.	Authentication error. Check the authentication method, authenticated account, and authenticated password.
Checking the folder to save	Check the network path of the shared folder.	Communication error. Check the Wi-Fi/network connection.
Checking the file name	Check if there is a file with the same name as the file you want to save in the folder.	The file name is already in use. Rename the file and scan again.
Writing the file	Write a new file.	Scanned file(s) are too large. Only XX page(s) have been sent. Check if the destination has enough space.

Saving the Scanned Images Takes a Long Time

It takes a long time for the name resolution to correspond to the "Domain Name" and the "IP Address".

Solutions

Check the following points.

❏ Make sure the DNS setting is correct.

❏ Make sure each DNS setting is correct when checking the Web Config.

❏ Make sure the DNS domain name is correct.

Cannot Send or Receive Faxes

Cannot Send or Receive Faxes

The following causes can be considered.

There are some problems in telephone wall jack.

Solutions

Check that the telephone wall jack works by connecting a phone to it and testing it. If you cannot make or receive calls, contact your telecommunication company.

There are some problems in connecting to the telephone line.

Solutions

Select **Settings** > **General Settings** > **Fax Settings** > **Check Fax Connection** on the control panel to run the automatic fax connection check. Try the solutions printed on the report.

Communication error occurs.

Solutions

Select **Slow(9,600bps)** in **Settings** > **General Settings** > **Fax Settings** > **Basic Settings** > **Fax Speed** on the control panel.

Connected to a DSL phone line without DSL filter.

Solutions

To connect to a DSL phone line, you need to use a DSL modem equipped with a built-in DSL filter, or install a separate DSL filter to the line. Contact your DSL provider.

"Connecting to DSL or ISDN" on page 386

There are some problems in the DSL filter when you connect to a DSL phone line.

Solutions

If you can not send or receive fax, connect the printer directly to a telephone wall jack to see if the printer can send a fax. If it works, the problem may be caused by the DSL filter. Contact your DSL provider.

Cannot Send Faxes

The following causes can be considered.

The connection line is set to PSTN in a facility where a private branch exchange (PBX) is being used.

Solutions

Select **PBX** in **Settings** > **General Settings** > **Fax Settings** > **Basic Settings** > **Line Type** on the control panel.

Sending faxes without entering an access code in an environment in which a PBX is installed.

Solutions

If your phone system requires an external access code to get an outside line, register the access code to the printer, and enter # (hash) at the beginning of a fax number when sending.

The header information for outgoing faxes is not registered.

Solutions

Select **Settings** > **General Settings** > **Fax Settings** > **Basic Settings** > **Header** and set up the header information. Some fax machines automatically reject incoming faxes that do not include header information.

Your caller ID is blocked.

Solutions

Contact your telecommunication company to unblock your caller ID. Some phones or fax machines automatically reject anonymous calls.

The recipient's fax number is wrong.

Solutions

Check that the recipient's number registered in your contacts list or that you entered directly using the keypad is correct. Or, check with the recipient that the fax number is correct.

The recipient's fax machine is not ready to receive faxes.

Solutions

Ask the recipient if the recipient's fax machine is ready to receive a fax.

Sending a fax accidently using the subaddress feature.

Solutions

Check if you accidentally sent a fax using the subaddress feature. If you select a recipient with a subaddress from the contact list, the fax may be sent using the subaddress feature.

The recipient's fax machine is not capable of receiving faxes using the subaddress feature.

Solutions

When sending faxes using the subaddress feature, ask the recipient if their fax machine is capable of receiving faxes using the subaddress feature.

The subaddress and password are wrong.

Solutions

When sending faxes using the subaddress feature, check that the subaddress and password are correct. Check with the recipient that the subaddress and password match.

The data being sent is too large.

Solutions

You can send faxes at a smaller data size using one of the following methods.

- When you send the fax in monochrome, enable **Direct Send** in **Fax** > **Fax Settings** > **Fax Send Settings**.

  "Sending Many Pages of a Monochrome Document (Direct Send)" on page 115

- Using the connected phone

  "Sending Faxes Dialing from the External Phone Device" on page 113

- Using On Hook

  "Sending Faxes Manually After Confirming the Recipient's Status" on page 113

- Separating the originals

Cannot Receive Faxes

The following causes can be considered.

We also recommend checking the printer status in **Job/Status**, such as whether or not the printer is currently receiving the fax.

Subscribing to a call forwarding service.

Solutions

If you have subscribed to a call forwarding service, the printer may not be able to receive faxes. Contact the service provider.

The Receive Mode is set to Manual while an external phone device is connected to the printer.

Solutions

If an external phone device is connected to the printer and is sharing a phone line with the printer, select **Settings** >**General Settings** > **Fax Settings** > **Basic Settings**, and then set **Receive Mode** to **Auto**.

The available memory of the inbox and the confidential box is not enough.

Solutions

100 received documents have been saved in the inbox and the confidential box in total. Delete the unnecessary documents.

The computer that will save the received faxes is not turned on.

Solutions

When you have made settings to save received faxes to a computer, turn on the computer. The received fax is deleted once it has been saved to the computer.

The subaddress and password are wrong.

Solutions

When receiving faxes using the subaddress feature, check that the subaddress and password are correct. Check with the sender that the subaddress and password match.

The sender's fax number has been registered to the Rejection Number List.

Solutions

Make sure that the sender's number can be deleted from the **Rejection Number List** before deleting it. Delete it from **Settings** > **General Settings** > **Fax Settings** > **Basic Settings** > **Rejection Fax** > **Edit Blocked Number list**. Or disable the **Rejection Number List** in **Settings** > **General Settings** > **Fax Settings** > **Basic Settings** > **Rejection Fax** > **Rejection Fax**. Faxes sent from numbers that have not been registered to this list are blocked when this setting is enabled.

The sender's fax number has not been registered in the contacts list.

Solutions

Register the sender's fax number to contact list. Or disable **Unregistered Contacts** in **Settings** > **General Settings** > **Fax Settings** > **Basic Settings** > **Rejection Fax** > **Rejection Fax**. Faxes sent from numbers that have not been registered to this list are blocked.

The sender has sent the fax without header information.

Solutions

Ask the sender if header information is setup on their fax machine. Or, disable **Fax Header Blank** in **Settings** > **General Settings** > **Fax Settings** > **Basic Settings** > **Rejection Fax** > **Rejection Fax**. Faxes that do not include header information are blocked when this setting is enabled.

Cannot Send Faxes to a Specific Recipient

The following causes can be considered.

The recipient's machine takes a long time to answer.

Solutions

If the recipient machine does not pick up your call within 50 seconds after the printer has finished dialing, the call ends with an error. Dial using the (**On Hook**) feature or using a connected telephone to check how long it takes before you hear a fax tone. If it takes more than 50 seconds, add pauses after the fax number to send the fax. Tap to enter the pause. A hyphen is entered as the pause mark. One pause is about three seconds. Add multiple pauses as needed.

The Fax Speed setting registered in the contact list is wrong.

Solutions

Select the recipient from the contact list, and then select **Edit** > **Fax Speed** > **Slow(9,600bps)**.

Cannot Send Faxes at a Specified Time

The printer's date and time is wrong.

Solutions

Select **Settings** > **General Settings** > **Basic Settings** > **Date/Time Settings**, and then set the correct date and time.

Faxes Are Sent at the Wrong Size

The following causes can be considered.

The originals are not placed correctly.

Solutions

- ❏ Make sure the original is placed correctly against the alignment marks.
- ❏ If the edge of the scanned image is missing, move the original slightly away from the edge of the scanner glass. You cannot scan the area within approximately 1.5 mm (0.06 in.) from the edge of the scanner glass.

➡ "Placing Originals" on page 35

There is dust or dirt on the scanner glass or document mat.

Solutions

When scanning from the control panel and selecting the auto scan area cropping function, remove any trash or dirt from the scanner glass and document mat. If there is any trash or dirt around the original, the scanning range expands to include it.

➡ "Cleaning the Scanner Glass" on page 150
➡ "Cleaning the Scanner Glass" on page 150

Cannot Save Received Faxes to a Memory Device

The following causes can be considered.

The setting for saving received faxes to external memory is disabled.

Solutions

Select **Settings** > **General Settings** > **Fax Settings** > **Receive Settings**, and then enable **Save to Memory Device** in each menu.

A memory device is not connected to the printer.

Solutions

Connect a memory device, in which you have created a folder to save faxes, to the printer. Once the faxes are saved in the device, they are deleted from the printer's memory.

There is not enough free space in the device.

Solutions

Delete unnecessary data from the device to increase the amount of free space. Or, connect another device that has enough free space.

The memory device is write protected.

Solutions

Check if the device is write protected.

Received Faxes Are Not Printed

The following causes can be considered.

An error has occurred in the printer such as a paper jam.

Solutions

Clear the printer error, and then ask the sender to resend the fax.

Printing received faxes is disabled under the current settings.

Solutions

Make settings to print received faxes in **Settings** > **General Settings** > **Fax Settings** > **Receive Settings** > **Save/Forward Settings**.

Cannot Send and Receive Faxes (Windows)

Make sure the computer and the printer are connected correctly. The cause and solution to the problem differ depending on whether or not they are connected.

Checking the Connection Status

Use Epson Printer Connection Checker to check the connection status for the computer and the printer. You may be able to solve the problem depending on the results of the check.

1. Double-click the **Epson Printer Connection Checker** icon on the desktop.

   Epson Printer Connection Checker starts.

If there is no icon on the desktop, follow the methods below to start Epson Printer Connection Checker.

❏ Windows 10

Click the start button, and then select **Epson Software** > **Epson Printer Connection Checker**.

❏ Windows 8.1/Windows 8

Enter the application name in the search charm, and then select the displayed icon.

❏ Windows 7

Click the start button, and then select **All Programs** > **Epson Software** > **Epson Printer Connection Checker**.

2. Follow the on-screen instructions to check.

Note:
If the printer name is not displayed, install a genuine Epson printer driver.

"Checking if a genuine Epson printer driver is installed - Windows" on page 157

When you have identified the problem, follow the solution displayed on the screen.

When you cannot solve the problem, check the following according to your situation.

❏ The printer is not recognized over a network connection

"Cannot connect to a Network" on page 174

❏ The printer is not recognized using a USB connection

"The Printer Cannot Connect by USB (Windows)" on page 177

❏ The printer is recognized, but printing cannot be performed.

"Cannot Print Even Though a Connection has been Established (Windows)" on page 177

Cannot connect to a Network

The problem could be one of the following issues.

Something is wrong with the network devices for Wi-Fi connection.

Solutions

Turn off the devices you want to connect to the network. Wait for about 10 seconds, and then turn on the devices in the following order; wireless router, computer or smart device, and then printer. Move the printer and computer or smart device closer to the wireless router to help with radio wave communication, and then try to make network settings again.

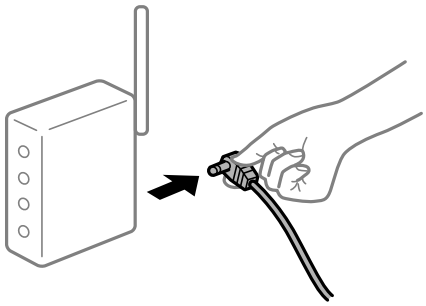

Devices cannot receive signals from the wireless router because they are too far apart.

Solutions

After moving the computer or the smart device and the printer closer to the wireless router, turn off the wireless router, and then turn it back on.

When changing the wireless router, the settings do not match the new router.

Solutions

Make the connection settings again so that they match the new wireless router.

➡ "When Replacing the Wireless Router" on page 260

The SSIDs connected from the computer or smart device and computer are different.

Solutions

When you are using multiple wireless routers at the same time or the wireless router has multiple SSIDs and devices are connected to different SSIDs, you cannot connect to the wireless router.

Connect the computer or smart device to the same SSID as the printer.

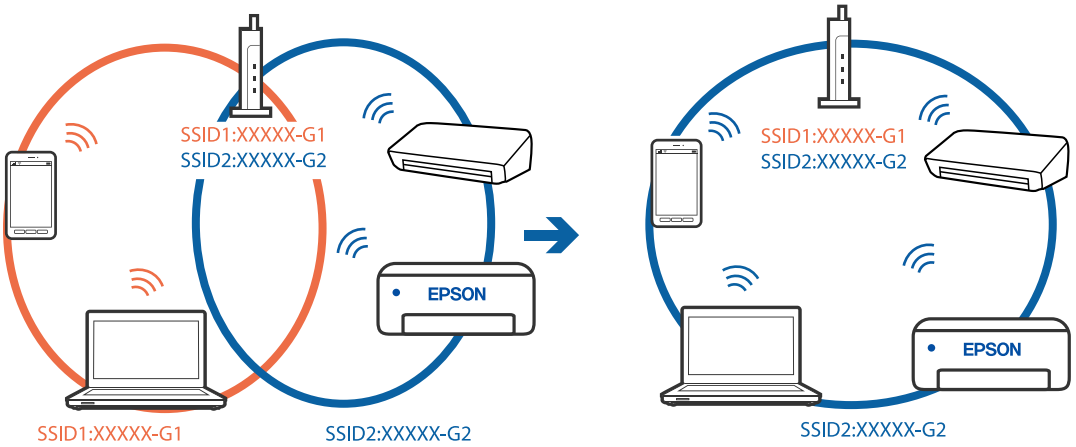

A privacy separator on the wireless router is available.

Solutions

Most wireless routers have a privacy separator feature that blocks communication between connected devices. If you cannot communicate between the printer and the computer or smart device even if they are connected to the same network, disable the privacy separator on the wireless router. See the manual provided with the wireless router for details.

The IP address is incorrectly assigned.

Solutions

If the IP address assigned to the printer is 169.254.XXX.XXX, and the subnet mask is 255.255.0.0, the IP address may not be assigned correctly.

Select **Settings** > **General Settings** > **Network Settings** > **Advanced** on the printer's control panel, and then check the IP address and the subnet mask assigned to the printer.

Restart the wireless router or reset the network settings for the printer.

➡ "Re-setting the Network Connection" on page 260

There is a problem with the network settings on the computer.

Solutions

Try accessing any website from your computer to make sure that your computer's network settings are correct. If you cannot access any website, there is a problem on the computer.

Check the network connection of the computer. See the documentation provided with the computer for details.

The printer has been connected by Ethernet using devices that support IEEE802.3az (Energy Efficient Ethernet).

Solutions

When you connect the printer by Ethernet using devices that support IEEE802.3az (Energy Efficient Ethernet), the following problems may occur depending on the hub or router that you are using.

- ❏ Connection becomes unstable, the printer is connected and disconnected again and again.
- ❏ Cannot connect to the printer.
- ❏ The communication speed becomes slow.

Follow the steps below to disable IEEE802.3az for the printer and then connect.

1. Remove the Ethernet cable connected to the computer and the printer.
2. When IEEE802.3az for the computer is enabled, disable it.

   See the documentation provided with the computer for details.
3. Connect the computer and the printer with an Ethernet cable directly.
4. On the printer, print a network connection report.

   "Printing a Network Connection Report" on page 278
5. Check the printer's IP address on the network connection report.
6. On the computer, access Web Config.

   Launch a Web browser, and then enter the printer's IP address.

   "Running Web Config on a Web Browser" on page 299
7. Select the **Network** tab > **Wired LAN**.
8. Select **OFF** for **IEEE 802.3az**.
9. Click **Next**.
10. Click **OK**.
11. Remove the Ethernet cable connected to the computer and the printer.
12. If you disabled IEEE802.3az for the computer in step 2, enable it.
13. Connect the Ethernet cables that you removed in step 1 to the computer and the printer.

If the problem still occurs, devices other than the printer may be causing the problem.

The Printer Cannot Connect by USB (Windows)

The following causes can be considered.

The USB cable is not plugged into the electrical outlet correctly.

Solutions

Connect the USB cable securely to the printer and the computer.

There is a problem with the USB hub.

Solutions

If you are using a USB hub, try to connect the printer directly to the computer.

There is a problem with the USB cable or the USB inlet.

Solutions

If the USB cable cannot be recognized, change the port, or change the USB cable.

You need to reconfigure the USB connection.

Solutions

Disconnect the USB cable from the computer. Right-click on the printer icon displayed on the computer, and then select **Remove Device**. Next, connect the USB cable to the computer.

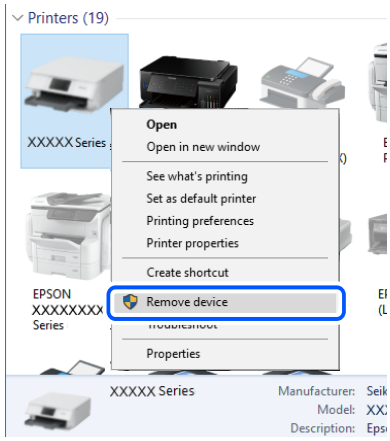

If you cannot use a USB cable, reset the USB connection by following the steps for changing the method of connecting to a computer. See the related information link below for details.

➡ "Making Settings for Connecting to the Computer" on page 260

Cannot Send or Receive Faxes Even Though a Connection has been Correctly Established (Windows)

The following causes can be considered.

The software is not installed.

Solutions

Make sure that the PC-FAX driver have been installed on the computer. The PC-FAX driver is installed with FAX Utility. Follow the steps below to check if it is installed.

Make sure the printer (fax) is displayed in **Devices and Printers**, **Printer**, or **Printers and Other Hardware**. The printer (fax) is displayed as "EPSON XXXXX (FAX)". If the printer (fax) is not displayed, uninstall and then re-install the FAX Utility. See the following to access **Devices and Printers**, **Printer**, or **Printers and Other Hardware**.

- ❏ Windows 10

  Click on the start button, and then select **Windows System** > **Control Panel** > **View devices and printers** in **Hardware and Sound**.

- ❏ Windows 8.1/Windows 8

  Select **Desktop** > **Settings** > **Control Panel** > **View devices and printers** in **Hardware and Sound** or **Hardware**.

- ❏ Windows 7

  Click the start button, and select **Control Panel** > **View devices and printers** in **Hardware and Sound** or **Hardware**.

- ❏ Windows Vista

  Click the start button, and select **Control Panel** > **Printers** in **Hardware and Sound**.

- ❏ Windows XP

  Click the start button, and select **Settings** > **Control Panel** > **Printers and Other Hardware** > **Printers and Faxes**.

User authentication failed when a fax is sent from a computer.

Solutions

Set the user name and password in the printer driver. When sending a fax from a computer when the security function that restrict users from using the printer's fax function is set, user authentication is performed with the user name and password set in the printer driver.

There are some problems with fax connection and fax settings.

Solutions

Try the resolutions for fax connection and fax settings.

Cannot Send and Receive Faxes (Mac OS)

Make sure the computer and the printer are connected correctly. The cause and solution to the problem differ depending on whether or not they are connected.

Checking the Connection Status

Use EPSON Status Monitor to check the connection status for the computer and the printer.

1. Select **System Preferences** from the Apple menu > **Printers & Scanners** (or **Print & Scan**, **Print & Fax**), and then select the printer.

2. Click **Options & Supplies** > **Utility** > **Open Printer Utility**.

3. Click **EPSON Status Monitor**.

When the remaining ink levels are displayed, a connection has been successfully established between the computer and the printer.

Check the following if a connection has not been established.

❏ The printer is not recognized over a network connection
"Cannot connect to a Network" on page 182

❏ The printer is not recognized using a USB connection
"The Printer Cannot Connect by USB (Mac OS)" on page 185

Check the following if a connection has been established.

❏ The printer is recognized, but printing cannot be performed.
"Cannot Print Even Though a Connection has been Established (Mac OS)" on page 185

Cannot connect to a Network

The problem could be one of the following issues.

Something is wrong with the network devices for Wi-Fi connection.

Solutions

Turn off the devices you want to connect to the network. Wait for about 10 seconds, and then turn on the devices in the following order; wireless router, computer or smart device, and then printer. Move the printer and computer or smart device closer to the wireless router to help with radio wave communication, and then try to make network settings again.

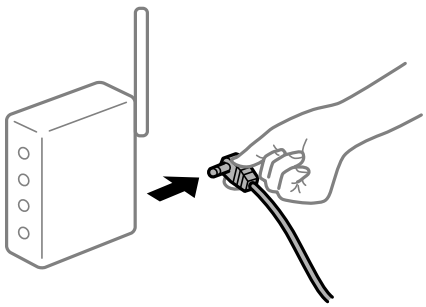

Devices cannot receive signals from the wireless router because they are too far apart.

Solutions

After moving the computer or the smart device and the printer closer to the wireless router, turn off the wireless router, and then turn it back on.

When changing the wireless router, the settings do not match the new router.

Solutions

Make the connection settings again so that they match the new wireless router.

➡ "When Replacing the Wireless Router" on page 260

The SSIDs connected from the computer or smart device and computer are different.

Solutions

When you are using multiple wireless routers at the same time or the wireless router has multiple SSIDs and devices are connected to different SSIDs, you cannot connect to the wireless router.

Connect the computer or smart device to the same SSID as the printer.

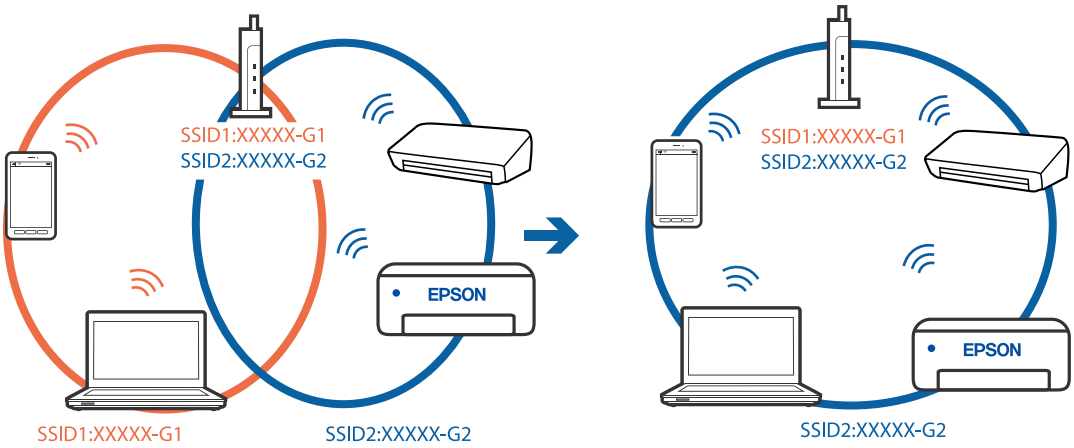

A privacy separator on the wireless router is available.

Solutions

Most wireless routers have a privacy separator feature that blocks communication between connected devices. If you cannot communicate between the printer and the computer or smart device even if they are connected to the same network, disable the privacy separator on the wireless router. See the manual provided with the wireless router for details.

The IP address is incorrectly assigned.

Solutions

If the IP address assigned to the printer is 169.254.XXX.XXX, and the subnet mask is 255.255.0.0, the IP address may not be assigned correctly.

Select **Settings** > **General Settings** > **Network Settings** > **Advanced** on the printer's control panel, and then check the IP address and the subnet mask assigned to the printer.

Restart the wireless router or reset the network settings for the printer.

➡ "Re-setting the Network Connection" on page 260

There is a problem with the network settings on the computer.

Solutions

Try accessing any website from your computer to make sure that your computer's network settings are correct. If you cannot access any website, there is a problem on the computer.

Check the network connection of the computer. See the documentation provided with the computer for details.

The printer has been connected by Ethernet using devices that support IEEE802.3az (Energy Efficient Ethernet).

Solutions

When you connect the printer by Ethernet using devices that support IEEE802.3az (Energy Efficient Ethernet), the following problems may occur depending on the hub or router that you are using.

- ❏ Connection becomes unstable, the printer is connected and disconnected again and again.
- ❏ Cannot connect to the printer.
- ❏ The communication speed becomes slow.

Follow the steps below to disable IEEE802.3az for the printer and then connect.

1. Remove the Ethernet cable connected to the computer and the printer.
2. When IEEE802.3az for the computer is enabled, disable it.

   See the documentation provided with the computer for details.
3. Connect the computer and the printer with an Ethernet cable directly.
4. On the printer, print a network connection report.

   "Printing a Network Connection Report" on page 278
5. Check the printer's IP address on the network connection report.
6. On the computer, access Web Config.

   Launch a Web browser, and then enter the printer's IP address.

   "Running Web Config on a Web Browser" on page 299
7. Select the **Network** tab > **Wired LAN**.
8. Select **OFF** for **IEEE 802.3az**.
9. Click **Next**.
10. Click **OK**.
11. Remove the Ethernet cable connected to the computer and the printer.
12. If you disabled IEEE802.3az for the computer in step 2, enable it.
13. Connect the Ethernet cables that you removed in step 1 to the computer and the printer.

If the problem still occurs, devices other than the printer may be causing the problem.

The Printer Cannot Connect by USB (Mac OS)

The following causes can be considered.

The USB cable is not plugged into the electrical outlet correctly.

Solutions

Connect the USB cable securely to the printer and the computer.

There is a problem with the USB hub.

Solutions

If you are using a USB hub, try to connect the printer directly to the computer.

There is a problem with the USB cable or the USB inlet.

Solutions

If the USB cable cannot be recognized, change the port, or change the USB cable.

You need to reconfigure the USB connection.

Solutions

Disconnect the USB cable from the computer. Right-click on the printer icon displayed on the computer, and then select **Remove Device**. Next, connect the USB cable to the computer.

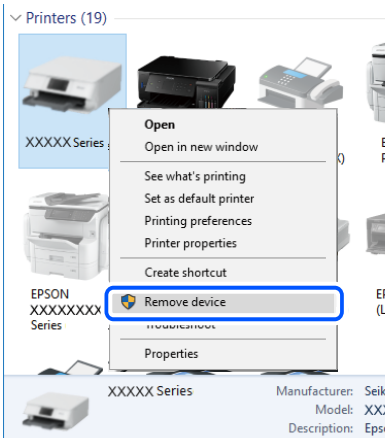

If you cannot use a USB cable, reset the USB connection by following the steps for changing the method of connecting to a computer. See the related information link below for details.

➡ "Making Settings for Connecting to the Computer" on page 260

Cannot Send or Receive Even Though a Connection has been Correctly Established (Mac OS)

The following causes can be considered.

The software is not installed.

Solutions

Make sure that the PC-FAX driver have been installed on the computer. The PC-FAX driver is installed with FAX Utility. Follow the steps below to check if it is installed.

Select **System Preferences** from the Apple menu > **Printers & Scanners** (or **Print & Scan**, **Print & Fax**), and then make sure the printer (fax) is displayed. The printer (fax) is displayed as "FAX XXXX (USB)" or "FAX XXXX (IP)". If the printer (fax) is not displayed, click [+] and then register the printer (fax).

PC-FAX driver is paused.

Solutions

Select **System Preferences** from the Apple menu > **Printers & Scanners** (or **Print & Scan**, **Print & Fax**), and then double-click the printer (fax). If the printer is paused, click **Resume** (or **Resume Printer**).

User authentication failed when a fax is sent from a computer.

Solutions

Set the user name and password in the printer driver. When sending a fax from a computer when the security function that restrict users from using the printer's fax function is set, user authentication is performed with the user name and password set in the printer driver.

There are some problems with fax connection and fax settings.

Solutions

Try the resolutions for fax connection and fax settings.

Error Code is Displayed on the Status Menu

If a job does not complete successfully, check the error code displayed on the history of each job. You can check the error code by selecting **Job/Status**, and then selecting **Job Status**. See the following table to find the problem and its solution.

Code	Problem	Solution
001	The product was turned off by a power failure.	-
106	Cannot print from the computer due to the access control settings.	Contact your printer administrator.
107	User authentication failed. The job has been canceled.	❏ Make sure that the user name and password are correct. ❏ Select **Settings** > **General Settings** > **System Administration** > **Security Settings** > **Access Control**. Enable the user restriction function, and then allow the job without an authentication information.
108	Confidential job data was deleted when the printer was turned off.	-
109	The received fax was already deleted.	-
110	The job was printed on one side only because the paper loaded does not support double sided printing.	If you want to perform 2-sided printing, load paper that supports 2-sided printing.

Code	Problem	Solution
201	The memory is full.	❏ Print received faxes from **Job Status** in **Job/Status** . ❏ Delete received faxes saved in the inbox from **Job Status** in **Job/Status**. ❏ If you are sending a monochrome fax to a single destination, you can send it by using Direct Send. ❏ Divide your originals in two or more to send them in several batches.
202	The line was disconnected by the recipient machine.	Wait for a while and then try again.
203	The product cannot detect the dial tone.	❏ Make sure that the phone cable is connected correctly and the phone line is working. ❏ When the printer is connected to the PBX or the terminal adapter, change the **Line Type** setting to **PBX**. ❏ Select **Settings** > **General Settings** > **Fax Settings** > **Basic Settings** > **Dial Tone Detection**, and then disable the dial tone setting.
204	The recipient machine is busy.	❏ Wait for a while and then try again. ❏ Check the recipient's fax number.
205	The recipient machine does not answer.	Wait for a while and then try again.
206	The phone cable is incorrectly connected to the LINE and EXT. port of the product.	Check the connection of the LINE port and the EXT. port of the printer.
207	The product is not connected to the phone line.	Connect the phone cable to the phone line.
208	The fax could not be sent to some of the specified recipients.	Print a **Fax Log** or **Last Transmission** report for previous faxes from **Fax Report** in the Fax mode to check the failed destination. When the **Save Failure Data** setting is enabled, you can resend a fax from **Job Status** in **Job/Status**.
301	There is not enough storage space available to save the data in the memory device.	❏ Increase the storage space in the memory device. ❏ Reduce the number of documents. ❏ Lower the scanning resolution or increase the compression ratio to reduce the size of the scanned image.
302	The memory device is write-protected.	Disable write protection on the memory device.
303	No folder has been created to save the scanned image.	Insert another memory device.
304	The memory device has been removed.	Reinsert the memory device.
305	An error occurred while saving the data to the memory device.	If the external device is accessed from a computer, wait for a while and then try again.
306	The memory is full.	Wait until other ongoing jobs are finished.

Code	Problem	Solution
311	A DNS error has occurred.	❏ Select **Settings** > **General Settings** > **Network Settings** > **Advanced** > **TCP/IP**, and then check the DNS settings. ❏ Check the DNS settings for the server, the computer, or the access point.
312	An authentication error has occurred.	Select **Settings** > **General Settings** > **Network Settings** > **Advanced** > **Email Server** > **Server Settings**, and then check the server settings.
313	A communication error has occurred.	❏ Print a network connection report to check if the printer is connected to the network. ❏ Select **Settings** > **General Settings** > **Network Settings** > **Advanced** > **Email Server** > **Server Settings** to check the email server settings. You can check the cause of the error by running connection check. ❏ The authentication method of the settings and the email server may not match. When you select **Off** as the authentication method, make sure the authentication method of the email server is set to None.
314	The data size exceeds the maximum size for attached files.	❏ Increase the **Attached File Max Size** setting in the scan settings. ❏ Lower the scanning resolution or increase the compression ratio to reduce the size of the scanned image.
315	The memory is full.	Retry after other ongoing jobs are finished.
321	A DNS error has occurred.	❏ Select **Settings** > **General Settings** > **Network Settings** > **Advanced** > **TCP/IP**, and then check the DNS settings. ❏ Check the DNS settings for the server, the computer, or the access point.
322	An authentication error has occurred.	Check the **Location** settings.
323	A communication error has occurred.	❏ Check the **Location** settings. ❏ Print a network connection report to check if the printer is connected to the network.
324	A file with the same name already exists in the specified folder.	❏ Delete the file with the same name. ❏ Change the file name prefix in **File Settings**.
325 326	There is not enough storage space available in the specified folder.	❏ Increase the storage space in the specified folder. ❏ Reduce the number of documents. ❏ Lower the scanning resolution or increase the compression ratio to reduce the size of the scanned image.
327	The memory is full.	Wait until other ongoing jobs are finished.
328	The destination was wrong or the destination does not exist.	Check the **Location** settings.

Code	Problem	Solution
331	A communication error occurred while acquiring the destination list.	Print a network connection report to check if the printer is connected to the network.
332	There is not enough storage space available to save the scanned image in the destination storage.	Reduce the number of documents.
333	The destination could not be found because the destination information was uploaded to the server before sending the scanned image.	Select the destination again.
334	An error occurred while sending the scanned image.	-
341	A communication error has occurred.	❏ Check the connections for the printer and the computer. If you are connecting over a network, print a network connection report to check if the printer is connected to the network. ❏ Make sure that Epson Event Manager is installed on the computer.
401	There is not enough storage space available to save the data in the memory device.	Increase the storage space in the memory device.
402	The memory device is write-protected.	Disable write protection on the memory device.
404	The memory device has been removed.	Reinsert the memory device.
405	An error occurred while saving the data to the memory device.	❏ Reinsert the memory device. ❏ Use a different memory device on which you have created a folder using the **Create a folder to save fax data** function.
411	A DNS error has occurred.	❏ Select **Settings** > **General Settings** > **Network Settings** > **Advanced** > **TCP/IP**, and then check the DNS settings. ❏ Check the DNS settings for the server, the computer, or the access point.
412	An authentication error has occurred.	Select **Settings** > **General Settings** > **Network Settings** > **Advanced** > **Email Server** > **Server Settings**, and then check the server settings.
413	A communication error has occurred.	❏ Select **Settings** > **General Settings** > **Network Settings** > **Advanced** > **Email Server** > **Server Settings** to check the email server settings. You can check the cause of the error by running connection check. ❏ The authentication method of the settings and the email server may not match. When you select **Off** as the authentication method, make sure the authentication method of the email server is set to None. ❏ Print a network connection report to check if the printer is connected to the network.

Code	Problem	Solution
421	A DNS error has occurred.	❏ Select **Settings** > **General Settings** > **Network Settings** > **Advanced** > **TCP/IP**, and then check the DNS settings. ❏ Check the DNS settings for the server, the computer, or the access point.
422	An authentication error has occurred.	Select **Settings** > **General Settings** > **Fax Settings** > **Receive Settings** > **Save/Forward Settings**, and then check the settings of the folder selected in **Save/Forward Destination**.
423	A communication error has occurred.	❏ Print a network connection report to check if the printer is connected to the network. ❏ Select **Settings** > **General Settings** > **Fax Settings** > **Receive Settings** > **Save/Forward Settings**, and then check the settings of the folder selected in **Save/Forward Destination**.
425	There is not enough storage space available in the forwarding destination folder.	Increase the storage space in the forwarding destination folder.
428	The destination was wrong or the destination does not exist.	Select **Settings** > **General Settings** > **Fax Settings** > **Receive Settings** > **Save/Forward Settings**, and then check the settings of the folder selected in **Save/Forward Destination**.

Cannot Operate the Printer as Expected

Operations are Slow

Printing Is Too Slow

The following causes can be considered.

Unnecessary applications are running.

Solutions

Close any unnecessary applications on your computer or smart device.

The print quality is set to high.

Solutions

Lower the quality setting.

Bidirectional printing is disabled.

Solutions

Enable the bidirectional (or high speed) setting. When this setting is enabled, the print head prints while moving in both directions, and the printing speed increases.

❏ Control panel

Select **Settings** > **General Settings** > **Printer Settings**, and then enable **Bidirectional**.

❏ Windows

Select **Bidirectional Printing** on the printer driver's **More Options** tab.

❏ Mac OS

Select **System Preferences** from the Apple menu > **Printers & Scanners** (or **Print & Scan**, **Print &Fax**), and then select the printer. Click **Options & Supplies** > **Options** (or **Driver**). Select **On** as the **Bidirectional Printing** setting.

Quiet Mode is enabled.

Solutions

Disable **Quiet Mode**. The printing speed slows down when the printer is running in **Quiet Mode**.

❏ Control panel

Select on the home screen, and then select **Off**.

❏ Windows

Select **Off** as the **Quiet Mode** setting on the printer driver's **Main** tab.

❏ Mac OS

Select **System Preferences** from the Apple menu > **Printers & Scanners** (or **Print & Scan**, **Print & Fax**), and then select the printer. Click **Options & Supplies** > **Options** (or **Driver**). Select Off as the **Quiet Mode** setting.

Printing Slows Down Dramatically During Continuous Printing

The function that prevents the printer mechanism from overheating and being damaged is operating.

Solutions

You can continue printing. To return to normal printing speed, leave the printer idle for at least 30 minutes. Printing speed does not return to normal if the power is off.

Scanning Speed Is Slow

Scanning at a high resolution.

Solutions

Try scanning at a lower resolution.

LCD Screen Gets Dark

The printer is in sleep mode.

Solutions

Tap anywhere on the LCD screen to return it to its former state.

Touch Screen Does Not Respond

The following causes can be considered.

A protective sheet has been stuck on the touch screen.

Solutions

If you stick a protective sheet on the touch screen, the optical touch screen may not respond. Remove the sheet.

The screen is smeared.

Solutions

Turn off the printer, and then wipe the screen using a soft, dry cloth. If the screen is smeared, it may not respond.

Cannot Operate from the Control Panel

When the user feature restriction is enabled, a user ID and password are required to print.

Solutions

If you do not know the password, contact your printer administrator.

"x" is Displayed on the Screen and you Cannot Select Photos

The image file is not supported.

Solutions

"x" is displayed on the LCD screen when the image file is not supported by the product. Use files supported by the product.

➡ “Supported Data Specifications” on page 334

Memory Device Is not Recognized

The memory device is set to disabled.

Solutions

On the control panel, select **Settings** > **General Settings** > **Printer Settings** > **Memory Device Interface**, and the enable the memory device.

Cannot Save Data to a Memory Device

The following causes can be considered.

The memory device is write-protected.

Solutions

Disable write protection on the memory device.

There is not enough free space on the memory device.

Solutions

Delete unnesesary data or insert another memory device.

Operation Sounds Are Loud

Quiet Mode is disabled.

Solutions

If operations sounds are too loud, enable **Quiet Mode**. Enabling this feature may reduce printing speed.

❏ Control panel

Select on the home screen, and then enable **Quiet Mode**.

❏ Windows printer driver

Enable **Quiet Mode** on the **Main** tab.

❏ Mac OS printer driver

Select **System Preferences** from the Apple menu > **Printers & Scanners** (or **Print & Scan**, **Print & Fax**), and then select the printer. Click **Options & Supplies** > **Options** (or **Driver**). Select **On** as the **Quiet Mode** setting.

The Date and Time Are Incorrect

Error occurred in power supply.

Solutions

After a power failure caused by a lightning strike or if the power is left off for a long time, the clock may show the wrong time. Set the date and the time correctly in **Settings** > **General Settings** > **Basic Settings** > **Date/Time Settings** on the control panel.

The Root Certificate Needs to be Updated

The root certificate has expired.

Solutions

Run Web Config, and then update the root certificate.

Cannot Cancel Printing from a Computer Running Mac OS X v10.6.8

There is a problem with your AirPrint setup.

Solutions

Run Web Config, and then select **Port9100** as the **Top Priority Protocol** setting in **AirPrint Setup**. Select **System Preferences** from the Apple menu > **Printers & Scanners** (or **Print & Scan**, **Print & Fax**), remove the printer, and then add the printer again.

➡ "Application for Configuring Printer Operations (Web Config)" on page 299

Forgot Your Password

You need help from service personnel.

Solutions

If you forget the administrator's password, contact Epson support.

Copies are Made or Faxes are Sent Unintentionally

Foreign objects are touching the optical touch panel.

Solutions

Select **Settings** > **General Settings** > **Basic Settings** > **Wake from Sleep**, and then turn off **Wake with LCD Screen Touch**. The printer will not return from sleep mode (power saving) until you press the ⏻ button.

Sender's Fax Number Not Displayed

The sender's fax number is not set to the sender's machine.

Solutions

The sender may not have set the fax number. Contact the sender.

Sender's Fax Number Displayed on Received Faxes is Wrong

The sender's fax number set to the sender's machine is wrong.

Solutions

The sender may have set the fax number incorrectly. Contact the sender.

Cannot Make Calls on the Connected Telephone

The phone cable is not connected correctly.

Solutions

Connect the telephone to the EXT. port on the printer, and pick up the receiver. If you cannot hear a dial tone through the receiver, connect the phone cable correctly.

Answering Machine Cannot Answer Voice Calls

The printer's Rings to Answer setting is set to less than the number of rings for your answering machine.

Solutions

Select **Slow(9,600bps)** in **Settings** > **General Settings** > **Fax Settings** > **Basic Settings** > **Rings to Answer**, and then set to a number higher than the number of rings for your answering machine.

A Lot of Junk Faxes Have Been Received

The printer's feature to block junk faxes has not been set up.

Solutions

Make **Rejection Fax** settings in **Settings** > **General Settings** > **Fax Settings** > **Basic Settings**.

"Making Settings for Blocking Junk Faxes" on page 399

A Message is Displayed on the LCD Screen

If an error message is displayed on the LCD screen, follow the on-screen instructions or the solutions below to solve the problem.

Error Messages	Solutions
Printer error. Turn the power off and on again. If the problem persists, contact Epson Support.	Remove any paper or protective material in the printer. If the error message is still displayed, contact Epson support.
Printer error. Contact Epson Support. Non-printing features are available.	The printer may be damaged. Contact Epson support or an authorised Epson service provider to request repairs. However, non-printing features such as scanning are available.
Printer error. For details, see your documentation.	The printer may be damaged. Contact Epson support or an authorised Epson service provider to request repairs.
Paper out in XX. Load paper. Paper Size: XX/ Paper Type: XX	Load paper in the displayed paper source, and if you load paper in the paper cassette, insert it all the way.
The printer's borderless printing ink pad is nearing the end of its service life. It is not a user-replaceable part. Please contact Epson support.	Contact Epson or an authorised Epson service provider to replace the borderless printing ink pad*. It is not a user-serviceable part. Tap **OK** to resume printing.
The printer's borderless printing ink pad has reached the end of its service life. It is not a user-replaceable part. Please contact Epson support.	Contact Epson or an authorised Epson service provider to replace the borderless printing ink pad*. It is not a user-serviceable part. Borderless printing is not available, but printing with a border is available.
Paper Setup Auto Display is set to Off. Some features may not be available. For details, see your documentation.	If **Paper Setup Auto Display** is disabled, you cannot use AirPrint.
No dial tone is detected.	This problem might be resolved by selecting **Settings** > **General Settings** > **Fax Settings** > **Basic Settings** > **Line Type** and then selecting **PBX**. If your phone system requires an external access code to get an outside line, set the access code after selecting **PBX**. Use # (hash) instead of the actual access code when entering an outside fax number. This makes connection more secure. If the error message is still displayed, set the **Dial Tone Detection** settings to disabled. However, disabling this feature may drop the first digit of a fax number and send the fax to the wrong number.

Error Messages	Solutions
Failed to receive faxes because the fax data capacity is full. Touch the Job/Status at the bottom of the Home Screen for details.	Received faxes may accumulate without being processed due to the following reasons. ❏ Cannot print because a printer error has occurred. Clear the printer error. To check the details and solutions to the error, select **Job/Status** and then select **Printer Status**. ❏ Cannot save in the computer or the memory device. To check whether or not received faxes have been saved, select **Job/Status** and then select **Job Status**. To save received faxes, turn on the computer or connect a memory device to the printer.
The combination of the IP address and the subnet mask is invalid. See your documentation for more details.	Enter the correct IP address or default gateway. Contact the person who setup the network for assistance.
To use cloud services, update the root certificate from the Epson Web Config utility.	Run Web Config, and then update the root certificate.
Check that the printer driver is installed on the computer and that the port settings for the printer are correct.	Make sure the printer port is selected correctly in **Property** > **Port** from the **Printer** menu as follows. Select "**USBXXX**" for a USB connection, or "**EpsonNet Print Port**" for a network connection.
Check that the printer driver is installed on the computer and that the port settings for the printer are correct.	
Recovery Mode Update Firmware	The printer has started in recovery mode because the firmware update failed. Follow the steps below to try to update the firmware again. 1. Connect the computer and the printer with a USB cable. (During recovery mode, you cannot update the firmware over a network connection.) 2. Visit your local Epson website for further instructions.

*In some print cycles a very small amount of surplus ink may be collected in the borderless printing ink pad. To prevent ink leakage from the pad, the product is designed to stop borderless printing when the pad has reached its limit. Whether and how often this is required will vary according to the number of pages you print using the borderless print option. The need for replacement of the pad does not mean that your printer has ceased to operate in accordance with its specifications. The printer will advise you when the pad requires replacing and this can only be performed by an authorised Epson Service provider. The Epson warranty does not cover the cost of this replacement.

Paper Gets Jammed

Check the error displayed on the control panel and follow the instructions to remove the jammed paper including any torn pieces. The LCD screen displays an animation that shows you how to remove jammed paper. Next, select **OK** to clear the error.

> ⚠ ***Caution:***
> *Never touch the buttons on the control panel while your hand is inside the printer. If the printer starts operating, it could cause an injury. Be careful not to touch the protruding parts to avoid injury.*

Important:

- *Remove the jammed paper carefully. Removing the paper vigorously may cause damage to the printer.*
- *When removing jammed paper, avoid tilting the printer, placing it vertically, or turning it upside down; otherwise ink may leak.*

Preventing Paper Jams

Check the following if paper jams occur frequently.

- Place the printer on a flat surface and operate in the recommended environmental conditions.
  "Environmental Specifications" on page 335
- Use the paper supported by this printer.
  "Available Paper and Capacities" on page 287
- Follow paper handling precautions.
  "Paper Handling Precautions" on page 30
- Load paper in the correct direction, and slide the edge guide against the edge of the paper.
  "Loading Paper" on page 31
- Raise the ADF document support.

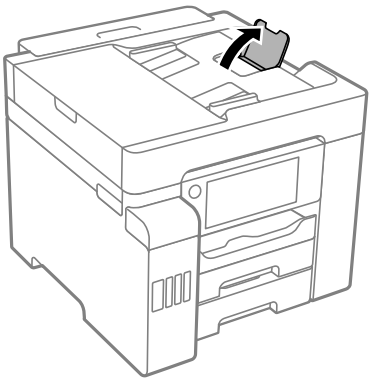

- Do not load more than the maximum number of sheets specified for paper.
- Load one sheet of paper at a time if you have loaded several sheets of paper.
- Make sure the paper size and paper type settings match the actual paper size and paper type loaded in the printer.
  "List of Paper Type" on page 31

It is Time to Refill the Ink

Ink Bottle Handling Precautions

Read the following instructions before refilling ink.

Storing precautions for ink

- ❏ Keep the ink bottles out of direct sunlight.
- ❏ Do not store the ink bottles in high or freezing temperatures.
- ❏ After bringing an ink bottle inside from a cold storage site, allow it to warm up at room temperature for at least three hours before using it.
- ❏ Once you open an ink bottle, we recommend using it as soon as possible.
- ❏ Epson recommends using the ink bottle before the date printed on the package.
- ❏ Do not open the ink bottle package until you are ready to fill the ink tank. The ink bottle is vacuum packed to maintain its reliability. If you leave an ink bottle unpacked for a long time before using it, normal printing may not be possible.
- ❏ When storing or transporting an ink bottle, do not tilt the bottle and do not subject it to impacts or temperature changes. Otherwise, ink may leak even if the cap on the ink bottle is tightened securely. Be sure to keep the ink bottle upright when tightening the cap, and take precautions to prevent ink from leaking when transporting the bottle, for example, putting the bottle in a bag.

Handling precautions for refilling ink

- ❏ The ink for this printer must be handled carefully. Ink may splatter when the ink tanks are being filled or refilled with ink. If ink gets on your clothes or belongings, it may not come off.
- ❏ Use ink bottles with the correct part code for this printer.
- ❏ Do not shake too vigorously or squeeze the ink bottles.
- ❏ For optimum print results do not maintain low ink levels for extended periods of time.
- ❏ To obtain optimum printing results, refill the ink tanks to the upper line at least once every year.
- ❏ To ensure you receive premium print quality and to help protect your print head, a variable ink safety reserve remains in the ink tank when your printer indicates to refill ink. The yields quoted for you do not include this reserve.

Ink consumption

- ❏ To maintain optimum print head performance, some ink is consumed from all ink tanks during maintenance operations such as print head cleaning. Ink may also be consumed when you turn the printer on.
- ❏ When printing in monochrome or grayscale, color inks instead of black ink may be used depending on the paper type or print quality settings. This is because a mixture of color inks is used to create black.
- ❏ The ink in the ink bottles supplied with your printer is partly used during initial setup. In order to produce high quality printouts, the print head in your printer will be fully charged with ink. This one-off process consumes a quantity of ink and therefore these bottles may print fewer pages compared to subsequent ink bottles.
- ❏ Quoted yields may vary depending on the images that you are printing, the paper type that you are using, the frequency of your prints and environmental conditions such as temperature.

Refilling the Ink Tanks

Ink can be refilled at any time.

1. Select **Settings** on the home screen.
2. Select **Maintenance** > **Fill Ink**.

3. Read the usage precautions for filling ink on LCD screen, and then tap **Proceed**.

4. Open the ink tank cover.

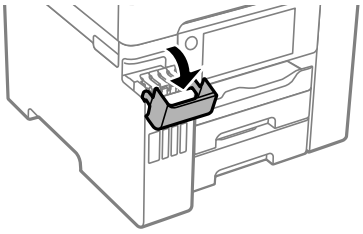

5. Open the ink tank cap.

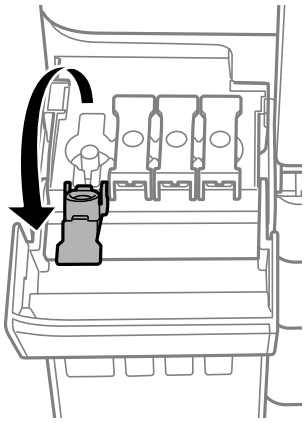

> ***Important:***
> *Make sure that the color of the ink tank matches the ink color that you want to refill.*

6. While holding the ink bottle upright, turn the cap slowly to remove it.

> ***Important:***
> - *Epson recommends the use of genuine Epson ink bottles.*
> - *Be careful not to spill any ink.*

7. Check the upper line (a) in the ink tank.

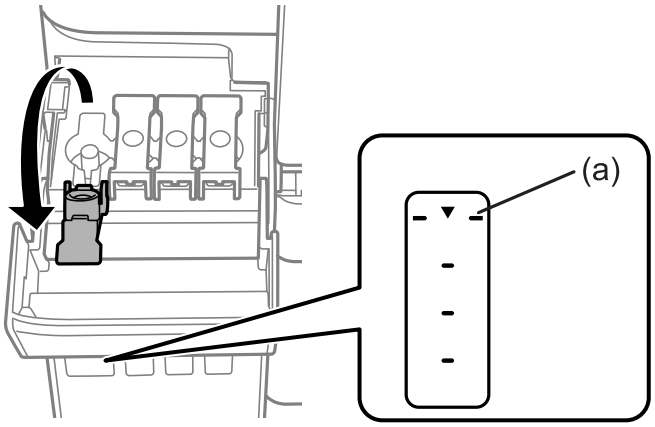

8. Align the top of the ink bottle with the filling port, and then insert it straight into the port to fill ink until it stops automatically at the upper line.

   When you insert the ink bottle into the filling port for the correct color, ink starts pouring and the flow stops automatically when the ink reaches the upper line.

   If the ink does not start flowing into the tank, remove the ink bottle and reinsert it. However, do not reinsert the ink bottle when the ink has reached the upper line; otherwise ink may leak.

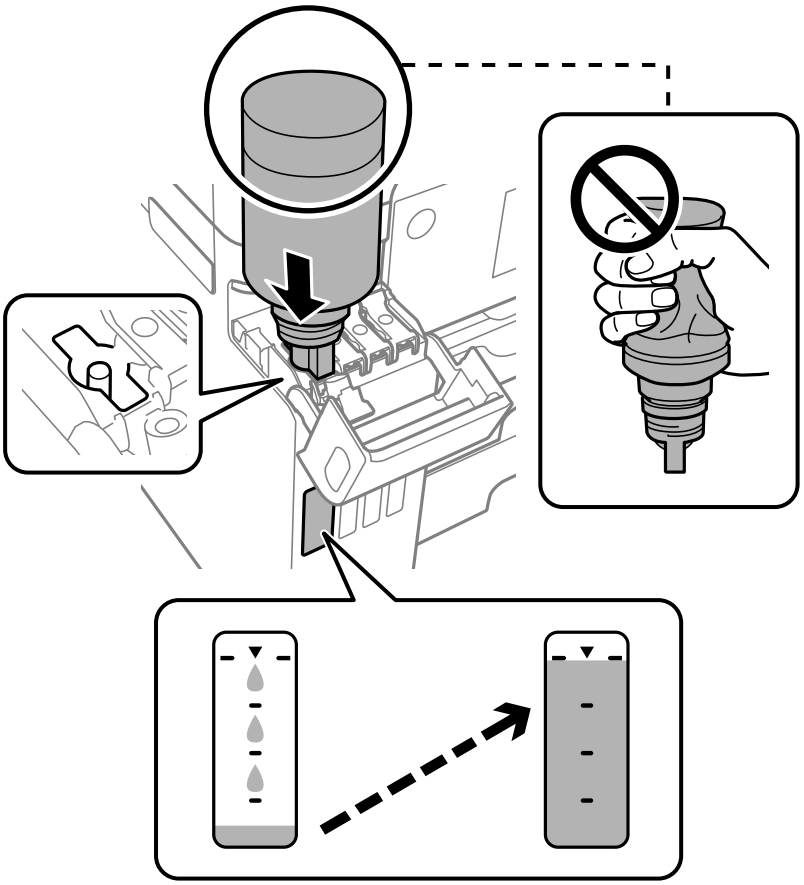

> ***Important:***
> *Do not allow the top of the ink bottle to hit against any objects after removing its cap; otherwise ink may spill.*

9. When you have finished refilling the ink, remove the ink bottle, and then close the ink tank cap securely.

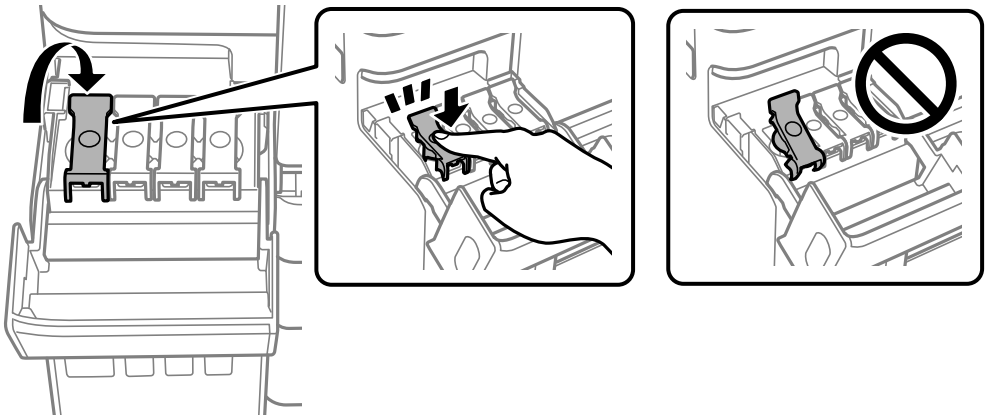

> ***Important:***
> *Do not leave the ink bottle inserted; otherwise the bottle may be damaged or ink may leak.*

Note:
If any ink remains in the ink bottle, tighten the cap and store the bottle upright for later use.

10. Close the ink tank cover firmly.

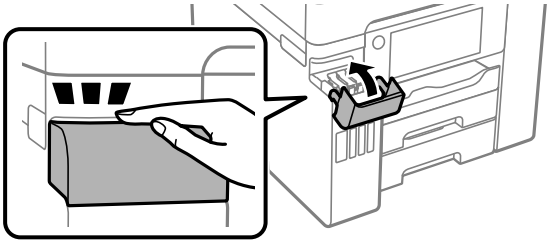

11. Follow the on-screen instructions to set the ink level of the color of the ink you refilled.

> **Important:**
> *Even if you do not refill ink up to the upper line on the ink tank, you can continue using the printer. To keep your printer operating at its best, however, fill ink tank up to the upper line and reset the ink level immediately.*

Related Information

➡ "Ink Bottle Codes" on page 292
➡ "Ink Bottle Handling Precautions" on page 228

It is Time to Replace the Maintenance Box

Maintenance Box Handling Precautions

Read the following instructions before replacing the maintenance box.

- ❏ Do not touch the green chip on the side of the maintenance box. Doing so may prevent normal operation and printing.
- ❏ Do not replace the maintenance box during printing; otherwise, ink may leak.
- ❏ Do not remove the maintenance box or open its cover except when replacing the maintenance box; otherwise ink may leak.
- ❏ Do not reuse a maintenance box which has been removed and left detached for a long period. Ink inside the box will have solidified and no more ink can be absorbed.
- ❏ Do not tilt the used maintenance box until after it is sealed in the plastic bag; otherwise ink may leak.
- ❏ Do not store the maintenance box in high or freezing temperatures.
- ❏ Keep the maintenance box out of direct sunlight.
- ❏ Do not drop the maintenance box or subject it to strong shocks.
- ❏ Do not touch the openings in the maintenance box as you may get smeared with ink.

Replacing a Maintenance Box

In some print cycles a very small amount of surplus ink may be collected in the maintenance box. To prevent ink leakage from the maintenance box, the printer is designed to stop printing when the absorbing capacity of the maintenance box has reached its limit. Whether and how often this is required will vary according to the number of pages you print, the type of material that you print and the number of cleaning cycles that the printer performs.

When a message is displayed prompting you to replace the maintenance box, refer to the animations displayed on the control panel. The need for replacement of the box does not mean that your printer has ceased to operate in

accordance with its specifications. The Epson warranty does not cover the cost of this replacement. It is a user-serviceable part.

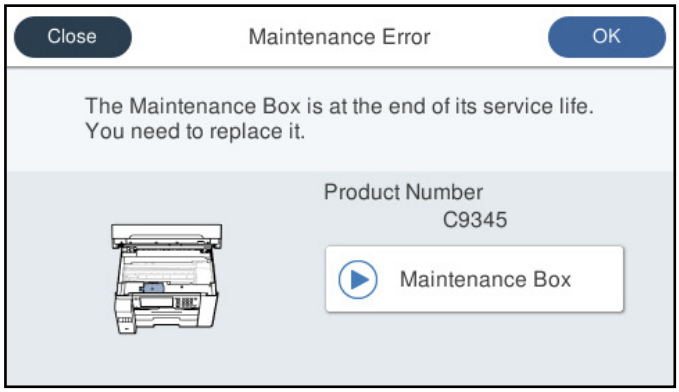

Note:

- *When the maintenance box is full, you cannot print and clean the print head until it is replaced to avoid ink leakage. However, you can perform operations that do not use ink such as scanning.*
- *When the following screen is displayed, the part cannot be replaced by users. Contact Epson support.*

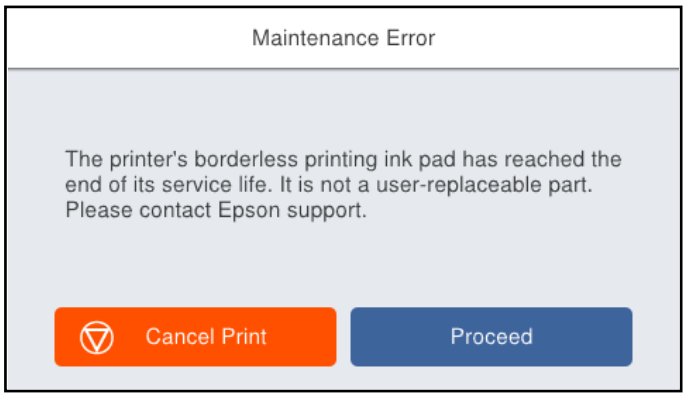

Related Information

➡ "Maintenance Box Code" on page 293
➡ "Maintenance Box Handling Precautions" on page 233

Printing, Copying, Scanning, and Faxing Quality is Poor

Print Quality is Poor

Color Missing, Banding, or Unexpected Colors Appear in Printout

The print head nozzles may be clogged.

Solutions

Use the **Print Quality Adjustment** feature. If you have not used the printer for a long time, the print head nozzles may be clogged and ink drops may not be discharged.

➡ "Adjusting the Print Quality" on page 145

Colored Banding Appears at Intervals of Approximately 1.1 cm or 3.3 cm

The following causes can be considered.

The paper type setting does not match the paper loaded.

Select the appropriate paper type setting for the type of paper loaded in the printer.

Related Information

➡ "List of Paper Type" on page 31

The print quality is set to low.

When printing on plain paper, print using a higher quality setting.

❏ Control panel

Select **Best** as the **Quality** on the **Advanced** tab in print settings.

❏ Windows

Select **High** from **Quality** on the printer driver's **Main** tab.

❏ Mac OS

Select **Fine** as **Print Quality** from the print dialog's **Print Settings** menu.

The print head position is out of alignment.

Align the print head using the **Print Quality Adjustment** feature.

Related Information

➡ "Adjusting the Print Quality" on page 145

Blurry Prints, Vertical Banding, or Misalignment

The following causes can be considered.

The print head position is out of alignment.

Solutions

Align the print head using the **Print Quality Adjustment** feature.

The bidirectional printing setting is enabled.

Solutions

If print quality does not improve even after aligning the print head, disable the bidirectional setting.

During bidirectional (or high speed) printing, the print head prints while moving in both directions, and vertical lines may be misaligned. Disabling this setting may slow down printing speed but improve print quality.

❏ Control panel

Select **Settings** > **General Settings** > **Printer Settings**, and then disable **Bidirectional**.

❏ Windows

Clear **Bidirectional Printing** on the printer driver's **More Options** tab.

❏ Mac OS

Select **System Preferences** from the Apple menu > **Printers & Scanners** (or **Print & Scan**, **Print & Fax**), and then select the printer. Click **Options & Supplies** > **Options** (or **Driver**). Select **Off** as the **Bidirectional Printing** setting.

Striped Patterns Appear

The bidirectional printing setting is enabled.

Solutions

When printing on plain paper, disable the bidirectional setting.

During bidirectional (or high speed) printing, the print head prints while moving in both directions, and vertical lines may be misaligned. Disabling this setting may slow down printing speed but improve print quality.

❏ Control panel

Select **Settings** > **General Settings** > **Printer Settings**, and then disable **Bidirectional**.

❏ Windows

Clear **Bidirectional Printing** on the printer driver's **More Options** tab.

❏ Mac OS

Select **System Preferences** from the Apple menu > **Printers & Scanners** (or **Print & Scan**, **Print & Fax**), and then select the printer. Click **Options & Supplies** > **Options** (or **Driver**). Select **Off** as the **High Speed Printing** setting.

The print quality is set to low.

Solutions

When printing on photo paper, print using a higher quality setting.

❏ Control panel

Select **Best** as the **Quality** on the **Advanced** tab in print settings.

❏ Windows

Select **High** from **Quality** on the printer driver's **Main** tab.

❏ Mac OS

Select **Fine** as **Print Quality** from the print dialog's **Print Settings** menu.

The print head nozzles may be clogged.

Solutions

Use the **Print Quality Adjustment** feature. If you have not used the printer for a long time, the print head nozzles may be clogged and ink drops may not be discharged.

➡ "Adjusting the Print Quality" on page 145

Printout Comes Out as a Blank Sheet

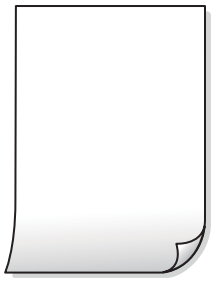

The print head nozzles may be clogged.

Solutions

Use the **Print Quality Adjustment** feature. If you have not used the printer for a long time, the print head nozzles may be clogged and ink drops may not be discharged.

➡ "Adjusting the Print Quality" on page 145

The print settings and the paper size loaded in the printer are different.

Solutions

Change the print settings according to the paper size loaded in the paper cassette. Load paper in the paper cassette that matches the print settings.

Multiple sheets of paper are fed into the printer at the same time.

Solutions

See the following to prevent multiple sheets of paper being fed into the printer at the same time.

➡ "Several Sheets of Paper are Fed at a Time" on page 171

Paper Is Smeared or Scuffed

The following causes can be considered.

Paper is loaded incorrectly.

Solutions

When horizontal banding (perpendicular to the printing direction) appears, or the top or bottom of the paper is smeared, load paper in the correct direction and slide the edge guides to the edges of the paper.

➡ "Loading Paper" on page 31

The paper path is smeared.

Solutions

When vertical banding (horizontal to the printing direction) appears, or the paper is smeared, clean the paper path.

➡ "Cleaning the Paper Path for Ink Smears" on page 150

The paper is curled.

Solutions

Place the paper on a flat surface to check if it is curled. If it is, flatten it.

The print head is rubbing the surface of the paper.

Solutions

When printing on thick paper, the print head is close to the printing surface and the paper may be scuffed. In this case, enable the reduce scuff setting. If you enable this setting, print quality may decline or printing may slow down.

❏ Control panel

Select **Settings** > **General Settings** > **Printer Settings**, and then enable **Thick Paper**.

❏ Windows

Click **Extended Settings** on the printer driver's **Maintenance** tab, and then select **Thick Paper and Envelopes**.

❏ Mac OS

Select **System Preferences** from the Apple menu > **Printers & Scanners** (or **Print & Scan**, **Print & Fax**), and then select the printer. Click **Options & Supplies** > **Options** (or **Driver**). Select **On** as the**Thick paper and envelopes** setting.

The back of the paper was printed before the side that had already been printed was dry.

Solutions

When performing manual 2-sided printing, make sure that the ink is completely dry before reloading the paper.

When printing using automatic 2-sided printing, the print density is too high and the drying time is too short.

Solutions

When using the automatic 2-sided printing feature and printing high density data such as images and graphs, set the print density to lower and the drying time to longer.

➡ "Printing on 2-Sides" on page 47
➡ "Printing on 2-Sides" on page 69

Printed Photos are Sticky

The print was made on the wrong side of the photo paper.

Solutions

Make sure you are printing on the printable side. When printing on the wrong side of the photo paper, you need to clean the paper path.

➡ "Cleaning the Paper Path for Ink Smears" on page 150

Images or Photos are Printed in Unexpected Colors

The following causes can be considered.

The print head nozzles may be clogged.

Solutions

Use the **Print Quality Adjustment** feature. If you have not used the printer for a long time, the print head nozzles may be clogged and ink drops may not be discharged.

➡ "Adjusting the Print Quality" on page 145

Color correction has been applied.

Solutions

When printing from the control panel or from the Windows printer driver, the Epson auto photo adjustment setting is applied by default depending on the paper type. Try change the setting.

❏ Control panel

Change the **Fix Photo** setting from **Auto** to any other option. If changing the setting does not work, select **Enhance Off** as the **Fix Photo** setting.

❏ Windows printer driver

On the **More Options** tab, select **Custom** in **Color Correction**, and then click **Advanced**. Change the **Scene Correction** setting from **Automatic** to any other option. If changing the setting does not work, use any color correction method other than **PhotoEnhance** in **Color Management**.

➡ "JPEG Settings" on page 76
➡ "Adjusting the Print Color" on page 62

Cannot Print Without Margins

Borderless is not set in the print settings.

Solutions

Make borderless setting in the print settings. If you select a paper type that does not support borderless printing, you cannot select **Borderless**. Select a paper type that supports borderless printing.

❏ Control panel

Select **Borderless** as **Layout**.

❏ Windows

Select **Borderless** on the printer driver's **Main** tab.

❏ Mac OS

Select a borderless paper size from **Paper Size**.

➡ "JPEG Settings" on page 76
➡ "TIFF Settings" on page 77
➡ "Paper for Borderless Printing" on page 290

Edges of the Image are Cropped During Borderless Printing

Because the image is slightly enlarged, the protruding area is cropped.

Solutions

Select a smaller enlargement setting.

❏ Windows

Click **Settings** next to the **Borderless** checkbox on the printer driver's **Main** tab, and then change the settings.

❏ Mac OS

Change the **Expansion** setting from the print dialog's **Print Settings** menu.

The Position, Size, or Margins of the Printout Are Incorrect

The following causes can be considered.

The paper is loaded incorrectly.

Solutions

Load paper in the correct direction, and slide the edge guide against the edge of the paper.

➡ "Loading Paper" on page 31

The size of the paper is set incorrectly.

Solutions

Select the appropriate paper size setting.

The margin setting in the application software is not within the print area.

Solutions

Adjust the margin setting in the application so that it falls within the printable area.

➡ "Printable Area" on page 326

Printed Characters Are Incorrect or Garbled

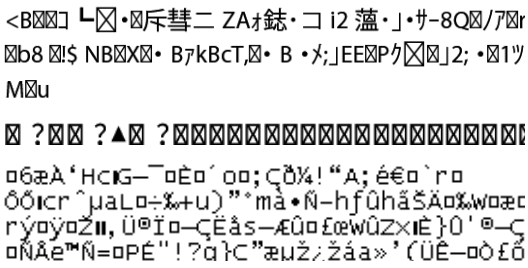

The following causes can be considered.

The USB cable is not connected correctly.

Solutions

Connect the USB cable securely to the printer and the computer.

There is a job waiting to be printed.

Solutions

Cancel any paused print jobs.

The computer has been manually put into the Hibernate mode or the Sleep mode while printing.

Solutions

Do not put the computer manually into the **Hibernate** mode or the **Sleep** mode while printing. Pages of garbled text may be printed next time you start the computer.

You are using the printer driver for a different printer.

Solutions

Make sure that the printer driver you are using is for this printer. Check the printer name on the top of the printer driver window.

The Printed Image Is Inverted

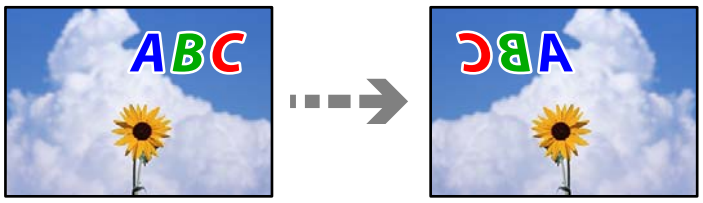

The image is set to invert horizontally in the print settings.

Solutions

Clear any mirror image settings in the printer driver or the application.

❏ Windows

Clear **Mirror Image** on the printer driver's **More Options** tab.

❏ Mac OS

Clear **Mirror Image** from the print dialog's **Print Settings** menu.

Mosaic-Like Patterns in the Prints

Images or photos with a low resolution were printed.

Solutions

When printing images or photos, print using high-resolution data. Images on web sites are often low resolution although they look good enough on the display, and so print quality may decline.

Copy Quality is Poor

Color Missing, Banding, or Unexpected Colors Appear in Copies

The print head nozzles may be clogged.

Solutions

Use the **Print Quality Adjustment** feature. If you have not used the printer for a long time, the print head nozzles may be clogged and ink drops may not be discharged.

➡ "Adjusting the Print Quality" on page 145

Colored Banding Appears at Intervals of Approximately 1.1 cm or 3.3 cm

The following causes can be considered.

The paper type setting does not match the paper loaded.

Solutions

Select the appropriate paper type setting for the type of paper loaded in the printer.

➡ "List of Paper Type" on page 31

The print head position is out of alignment.

Solutions

Align the print head using the **Print Quality Adjustment** feature.

➡ "Adjusting the Print Quality" on page 145

Blurry Copies, Vertical Banding, or Misalignment

The following causes can be considered.

The print head position is out of alignment.

Solutions

Align the print head using the **Print Quality Adjustment** feature.

The bidirectional printing setting is enabled.

Solutions

If print quality does not improve even after aligning the print head, disable the bidirectional setting.

During bidirectional (or high speed) printing, the print head prints while moving in both directions, and vertical lines may be misaligned. Disabling this setting may slow down printing speed but improve print quality.

Select **Settings** > **General Settings** > **Printer Settings**, and then disable **Bidirectional** on the control panel.

Striped Patterns Appear

The bidirectional printing setting is enabled.

Solutions

When printing on plain paper, disable the bidirectional setting.

During bidirectional (or high speed) printing, the print head prints while moving in both directions, and vertical lines may be misaligned. Disabling this setting may slow down printing speed but improve print quality.

Select **Settings** > **General Settings** > **Printer Settings**, and then disable **Bidirectional** on the control panel.

The print head nozzles may be clogged.

Solutions

Use the **Print Quality Adjustment** feature. If you have not used the printer for a long time, the print head nozzles may be clogged and ink drops may not be discharged.

➡ "Adjusting the Print Quality" on page 145

Printout Comes Out as a Blank Sheet

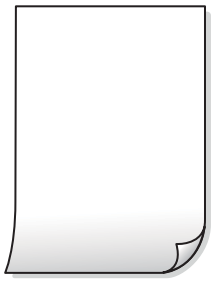

The print head nozzles may be clogged.

Solutions

Use the **Print Quality Adjustment** feature. If you have not used the printer for a long time, the print head nozzles may be clogged and ink drops may not be discharged.

➡ "Adjusting the Print Quality" on page 145

The print settings and the paper size loaded in the printer are different.

Solutions

Change the print settings according to the paper size loaded in the paper cassette. Load paper in the paper cassette that matches the print settings.

Multiple sheets of paper are fed into the printer at the same time.

Solutions

See the following to prevent multiple sheets of paper being fed into the printer at the same time.

➡ "Several Sheets of Paper are Fed at a Time" on page 171

Paper Is Smeared or Scuffed

The following causes can be considered.

Paper is loaded incorrectly.

Solutions

When horizontal banding (perpendicular to the printing direction) appears, or the top or bottom of the paper is smeared, load paper in the correct direction and slide the edge guides to the edges of the paper.

➡ "Loading Paper" on page 31

The paper path is smeared.

Solutions

When vertical banding (horizontal to the printing direction) appears, or the paper is smeared, clean the paper path.

➡ "Cleaning the Paper Path for Ink Smears" on page 150

The paper is curled.

Solutions

Place the paper on a flat surface to check if it is curled. If it is, flatten it.

The printhead is rubbing the surface of the paper.

Solutions

When copying on thick paper, the print head is close to the printing surface and the paper may be scuffed. In this case, enable the reduce scuff setting.

Select **Settings** > **General Settings** > **Printer Settings**, and then enable **Thick Paper** on the control panel. If you enable this setting, copy quality may decline or may slow down.

Copied Photos are Sticky

The copy was made on the wrong side of the photo paper.

Solutions

Make sure you are copying on the printable side. If you have accidentally copied on the wrong side of the photo paper, you need to clean the paper path.

➡ "Loading Paper" on page 31
➡ "Cleaning the Paper Path for Ink Smears" on page 150

The Position, Size, or Margins of the Copies are Incorrect

The following causes can be considered.

The paper is loaded incorrectly.

Solutions

Load paper in the correct direction, and slide the edge guide against the edge of the paper.

➡ "Loading Paper" on page 31

The size of the paper is set incorrectly.

Solutions

Select the appropriate paper size setting.

The originals are not placed correctly.

Solutions

- ❏ Make sure the original is placed correctly against the alignment marks.
- ❏ If the edge of the scanned image is missing, move the original slightly away from the edge of the scanner glass. You cannot scan the area within approximately 1.5 mm (0.06 in.) from the edge of the scanner glass.

➡ "Placing Originals" on page 35

There is dust or dirt on the scanner glass or document mat.

Solutions

When scanning from the control panel and selecting the auto scan area cropping function, remove any trash or dirt from the scanner glass and document mat. If there is any trash or dirt around the original, the scanning range expands to include it.

➡ "Cleaning the Scanner Glass" on page 150
➡ "Cleaning the Scanner Glass" on page 150

Original Size is wrong in copy setting.

Solutions

Select the appropriate **Original Size** in the copy setting.

➡ "Advanced Menu Options for Copying" on page 88

Uneven Colors, Smears, Dots, or Straight Lines Appear in the Copied Image

The following causes can be considered.

The paper path is dirty.

Solutions

Load and eject paper without printing to clean the paper path.

➡ "Cleaning the Paper Path for Ink Smears" on page 150

There is dust or dirt on the originals or the scanner glass.

Solutions

Remove any dust or dirt that adheres to the originals, and clean the scanner glass.

➡ "Cleaning the Scanner Glass" on page 150

There is dust or dirt on the ADF or originals.

Solutions

Clean the ADF, and remove any dust or dirt that adheres to the originals.

➡ "Cleaning the ADF" on page 151

The original was pressed with too much force.

Solutions

If you press with too much force, blurring, smudges, and spots may occur.

Do not press with too much force on the original or the document cover.

➡ "Placing Originals" on page 35

The copy density setting is too high.

Solutions

Lower the copy density setting.

➡ "Basic Menu Options for Copying" on page 86

Moiré (Cross-Hatch) Patterns Appear in the Copied Image

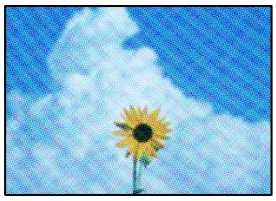

If the original is a printed document such as a magazine or a catalog, a dotted moiré pattern appears.

Solutions

Change the reduce and enlarge setting. If a moiré pattern still appears, place the original at a slightly different angle.

➡ "Basic Menu Options for Copying" on page 86

An Image of the Reverse Side of the Original Appears in the Copied Image

The following causes can be considered.

When scanning thin originals, images on the back may be scanned at the same time.

Solutions

Place the original on the scanner glass and then place a piece of black paper over it.

➡ "Placing Originals" on page 35

The copy density setting is too high.

Solutions

Lower the copy density setting.

➡ "Basic Menu Options for Copying" on page 86

Scanned Image Problems

Uneven Colors, Dirt, Spots, and so on Appear when Scanning from the Scanner Glass

There is dust or dirt on the originals or the scanner glass.

Solutions

Remove any dust or dirt that adheres to the originals, and clean the scanner glass.

➡ "Cleaning the Scanner Glass" on page 150

The original was pressed with too much force.

Solutions

If you press with too much force, blurring, smudges, and spots may occur.

Do not press with too much force on the original or the document cover.

➡ "Placing Originals" on page 35

Straight Lines Appear when Scanning from ADF

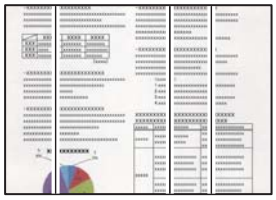

There is dust or dirt on the ADF or originals.

Solutions

Clean the ADF, and remove any dust or dirt that adheres to the originals.

➡ "Cleaning the ADF" on page 151

Offset Appears in the Background of Scanned Images

When scanning thin originals, images on the back may be scanned at the same time.

Solutions

When scanning from the scanner glass, place black paper or a desk pad over the original.

➡ "Placing Originals" on page 35

Cannot Scan the Correct Area on the Scanner Glass

The originals are not placed correctly.

Solutions

- ❏ Make sure the original is placed correctly against the alignment marks.
- ❏ If the edge of the scanned image is missing, move the original slightly away from the edge of the scanner glass. You cannot scan the area within approximately 1.5 mm (0.06 in.) from the edge of the scanner glass.

➡ "Placing Originals" on page 35

There is dust or dirt on the scanner glass or document mat.

Solutions

When scanning from the control panel and selecting the auto scan area cropping function, remove any trash or dirt from the scanner glass and document mat. If there is any trash or dirt around the original, the scanning range expands to include it.

➡ "Cleaning the Scanner Glass" on page 150
➡ "Cleaning the Scanner Glass" on page 150

Cannot Solve Problems in the Scanned Image

Check the following if you have tried all of the solutions and have not solved the problem.

There are problems with the scanning software settings.

Solutions

Use Epson Scan 2 Utility to initialize the settings for the scanner software.

Note:
Epson Scan 2 Utility is an application supplied with the scanner software.

1. Start the Epson Scan 2 Utility.
   - ❏ Windows 10
     Click the start button, and then select **EPSON** > **Epson Scan 2 Utility**.

❏ Windows 8.1/Windows 8

Enter the application name in the search charm, and then select the displayed icon.

❏ Windows 7/Windows Vista/Windows XP

Click the start button, and then select **All Programs** or **Programs** > **EPSON** > **Epson Scan 2** > **Epson Scan 2 Utility**.

❏ Mac OS

Select **Go** > **Applications** > **Epson Software** > **Epson Scan 2 Utility**.

2. Select the **Other** tab.

3. Click **Reset**.

If initialization does not solve the problem, uninstall and re-install the scanner software.

➡ "Installing the Applications Separately" on page 156

The Quality of the Sent Fax is Poor

Quality of the Sent Fax is Poor

The following causes can be considered.

There is dust or dirt on the originals or the scanner glass.

Solutions

Remove any dust or dirt that adheres to the originals, and clean the scanner glass.

➡ "Cleaning the Scanner Glass" on page 150

The original was pressed with too much force.

Solutions

If you press with too much force, blurring, smudges, and spots may occur.

Do not press with too much force on the original or the document cover.

➡ "Placing Originals" on page 35

Straight Lines Appear when Sending Faxes from the ADF

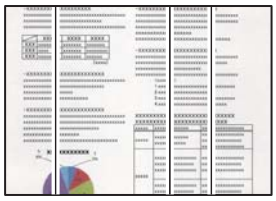

There is dust or dirt on the ADF or originals.

Solutions

Clean the ADF, and remove any dust or dirt that adheres to the originals.

➡ "Cleaning the ADF" on page 151

The Image Quality of the Sent Fax is Poor

The following causes can be considered.

The Original Type setting is wrong.

Solutions

Select **Fax** > **Fax Settings** > **Scan Settings** > **Original Type**, and then change the setting. When the original you are sending contains text and images, set this to **Photo**.

The resolution is set to low.

Solutions

If you do not know the performance of the sender's fax machine, set the following before sending a fax.

❏ Select **Fax** > **Fax Settings** and then make the **Resolution** setting to set the highest quality image.

❏ Select **Fax** > **Fax Settings** and then enable **Direct Send**.

Note that if you set **Resolution** to **Super Fine** or **Ultra Fine** but you send the fax without enabling **Direct Send**, the fax may be sent at a lower resolution.

ECM setting is disabled.

Solutions

Select **Settings** > **General Settings** > **Fax Settings** > **Basic Settings** and enable the **ECM** setting on the control panel. This may clear errors that occur due to connection problems. Note that the speed of sending and receiving faxes may be slower than when **ECM** is disabled.

An Image of the Reverse Side of the Original Appears in the Sent Fax

The following causes can be considered.

When scanning thin originals, images on the back may be scanned at the same time.

Solutions

Place the original on the scanner glass and then place a piece of black paper over it.

➡ "Placing Originals" on page 35

The density setting is high when sending faxes.

Solutions

Select **Fax** > **Fax Settings** > **Scan Settings** > **Density**, and then lower the setting.

Received Fax Quality is Poor

The Image Quality of Received Faxes is Poor

The following causes can be considered.

ECM setting is disabled.

Solutions

Select **Settings** > **General Settings** > **Fax Settings** > **Basic Settings** and enable the **ECM** setting on the control panel. This may clear errors that occur due to connection problems. Note that the speed of sending and receiving faxes may be slower than when **ECM** is disabled.

The image quality setting is low on the sender's fax machine.

Solutions

Ask the sender to send faxes at a higher quality.

Cannot Solve Problem After Trying All Solutions

If you cannot solve the problem after trying all of the solutions, contact Epson support.

If you cannot solve printing or copying problems, see the following related information.

Related Information

➡ "Cannot Solve Printing or Copying Problems" on page 256

Cannot Solve Printing or Copying Problems

Try the following problems in order starting at the top until you solve the problem.

❏ Make sure you match the paper type loaded in the printer and the paper type set on the printer to the paper type settings in the printer driver.

"Paper Size and Type Settings" on page 30

❏ Use a higher quality setting on the control panel or the printer driver.

❏ Align the print head.

"Aligning the Print Head (Control Panel)" on page 149

❏ Run a nozzle check to see if the print head nozzles are clogged.

If there are missing segments in the nozzle check pattern, the nozzles may be clogged. Repeat head cleaning and the nozzle check alternately 3 times and check if the clogging has cleared.

Note that print head cleaning uses some ink.

"Checking and Cleaning the Print Head" on page 146

❏ Turn off the printer, wait for at least 12 hours, and then check if the clogging has cleared.

If the problem is clogging, leaving the printer for a while without printing may solve the problem.

You can check the following items while the printer is off.

❏ Check that you are using genuine Epson ink bottles.

Try to use genuine Epson ink bottles. The use of non-genuine ink bottles may cause print quality to decline.

❏ Make sure that there are no paper fragments left inside the printer.

When you remove the paper, do not touch the translucent film with your hand or the paper.

❏ Check the paper.

Check if the paper is curled or loaded with the printable side facing up.

"Paper Handling Precautions" on page 30

"Available Paper and Capacities" on page 287

"Unavailable Paper Types" on page 292

❏ If you turn off the printer, wait for at least 12 hours, and if print quality has still not improved, run Power Cleaning.

"Running Power Cleaning" on page 147

If you cannot solve the problem by checking the solutions above, you may need to request repairs. Contact Epson support.

Related Information

➡ "Before Contacting Epson" on page 455
➡ "Contacting Epson Support" on page 455

Adding or Replacing the Computer or Devices

Connecting to a Printer that has been Connected to the Network. 259

Re-setting the Network Connection. 260

Connecting a Smart Device and Printer Directly (Wi-Fi Direct). 266

Checking the Network Connection Status. 277

Connecting to a Printer that has been Connected to the Network

When the printer has already been connected to the network, you can connect a computer or a smart device to the printer over the network.

Using a Network Printer from a Second Computer

We recommend using the installer to connect the printer to a computer. You can run the installer using one of the following methods.

❏ Setting up from the website

Access the following website, and then enter the product name. Go to **Setup**, and then start setting up.

http://epson.sn

❏ Setting up using the software disc (only for the models that come with a software disc and users with Windows computers with disc drives.)

Insert the software disc into the computer, and then follow the on-screen instructions.

Selecting the Printer

Follow the on-screen instructions until the following screen is displayed, select the printer name you want to connect to, and then click **Next**.

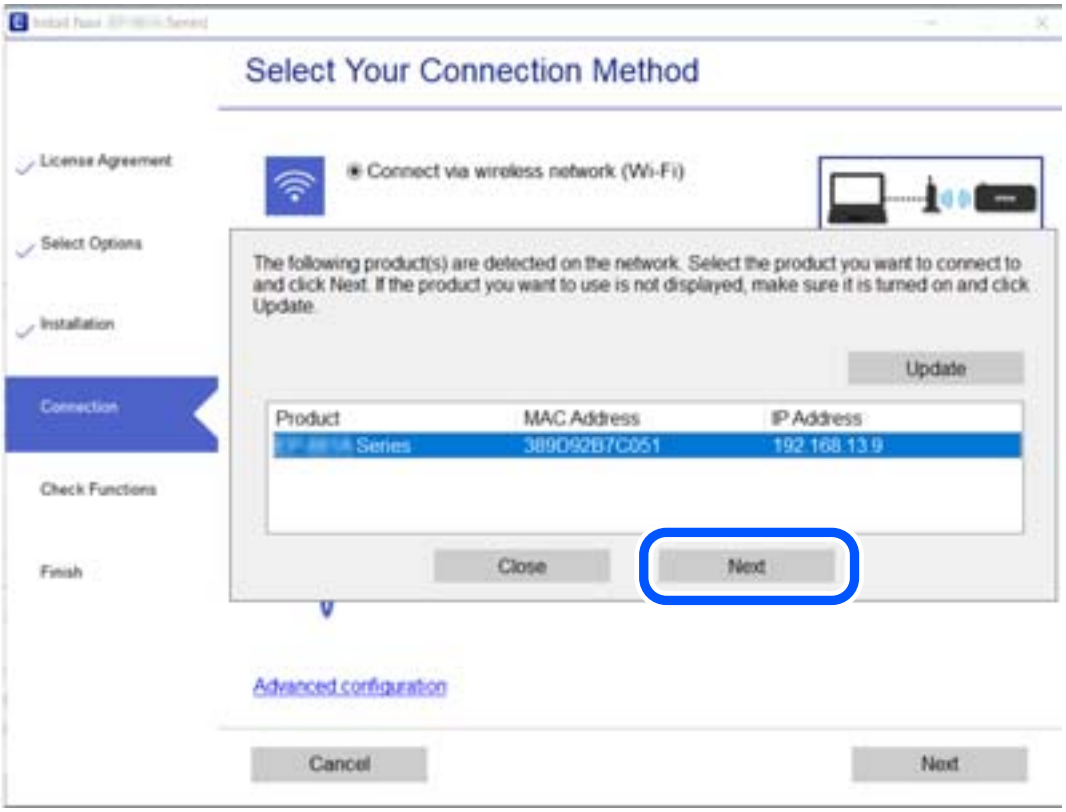

Follow the on-screen instructions.

Using a Network Printer from a Smart Device

You can connect a smart device to the printer using one of the following methods.

Connecting over a wireless router

Connect the smart device to the same Wi-Fi network (SSID) as the printer.

See the following for more details.

"Making Settings for Connecting to the Smart Device" on page 261

Connecting by Wi-Fi Direct

Connect the smart device to the printer directly without a wireless router.

See the following for more details.

"Connecting a Smart Device and Printer Directly (Wi-Fi Direct)" on page 266

Re-setting the Network Connection

This section explains how to make the network connection settings and change the connection method when replacing the wireless router or the computer.

When Replacing the Wireless Router

When you replace the wireless router, make settings for the connection between the computer or the smart device and the printer.

You need to make these settings if you change your Internet service provider and so on.

Making Settings for Connecting to the Computer

We recommend using the installer to connect the printer to a computer. You can run the installer using one of the following methods.

❏ Setting up from the website

Access the following website, and then enter the product name. Go to **Setup**, and then start setting up.

http://epson.sn

❏ Setting up using the software disc (only for the models that come with a software disc and users with Windows computers with disc drives.)

Insert the software disc into the computer, and then follow the on-screen instructions.

Selecting the Connection Methods

Follow the on-screen instructions until the following screen is displayed.

Select **Change connection method for printer (for new network router or changing USB to network, etc.)** on the Select Your Operation screen, and then click **Next**.

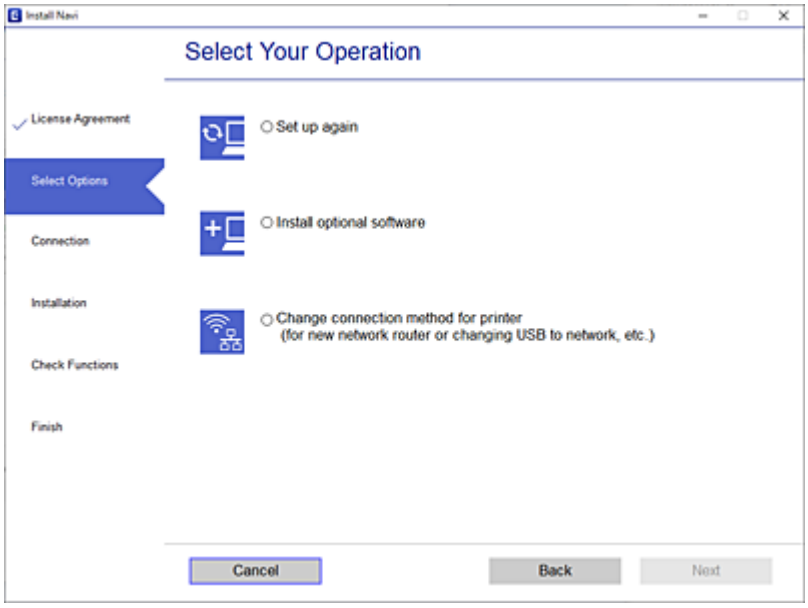

Follow the on-screen instructions.

If you cannot connect, see the following to try to solve the problem.

❏ Windows: "Cannot connect to a Network" on page 174

❏ Mac OS: "Cannot connect to a Network" on page 182

Making Settings for Connecting to the Smart Device

You can use the printer from a smart device when you connect the printer to the same Wi-Fi network (SSID) as the smart device. To use the printer from a smart device, set up from the following website. Access to the website from the smart device that you want to connect to the printer.

http://epson.sn > **Setup**

When Changing the Computer

When changing the computer, make connection settings between the computer and the printer.

Making Settings for Connecting to the Computer

We recommend using the installer to connect the printer to a computer. You can run the installer using one of the following methods.

❏ Setting up from the website

Access the following website, and then enter the product name. Go to **Setup**, and then start setting up.

http://epson.sn

❏ Setting up using the software disc (only for the models that come with a software disc and users with Windows computers with disc drives.)

Insert the software disc into the computer, and then follow the on-screen instructions.

Follow the on-screen instructions.

Changing the Connection Method to the Computer

This section explains how to change the connection method when the computer and the printer have been connected.

Changing the Network Connection from Ethernet to Wi-Fi

Change the Ethernet connection to Wi-Fi connection from the printer's control panel. The changing connection method is basically the same as the Wi-Fi connection settings.

Related Information

➡ "Making Wi-Fi Settings from the Control Panel" on page 264

Changing the Network Connection from Wi-Fi to Ethernet

Follow the steps below to change from a Wi-Fi connection to an Ethernet connection.

1. Select **Settings** on the home screen.
2. Select **General Settings** > **Network Settings** > **Wired LAN Setup**.
3. Follow the on-screen instructions.

Changing from USB to a Network Connection

Using the installer and re-set up in a different connection method.

❏ Setting up from the website

Access the following website, and then enter the product name. Go to **Setup**, and then start setting up.

http://epson.sn

❏ Setting up using the software disc (only for the models that come with a software disc and users with Windows computers with disc drives.)

Insert the software disc into the computer, and then follow the on-screen instructions.

Selecting Change the Connection Methods

Follow the on-screen instructions until the following screen is displayed.

Select **Change connection method for printer (for new network router or changing USB to network, etc.)** on the Select Your Operation screen, and then click **Next**.

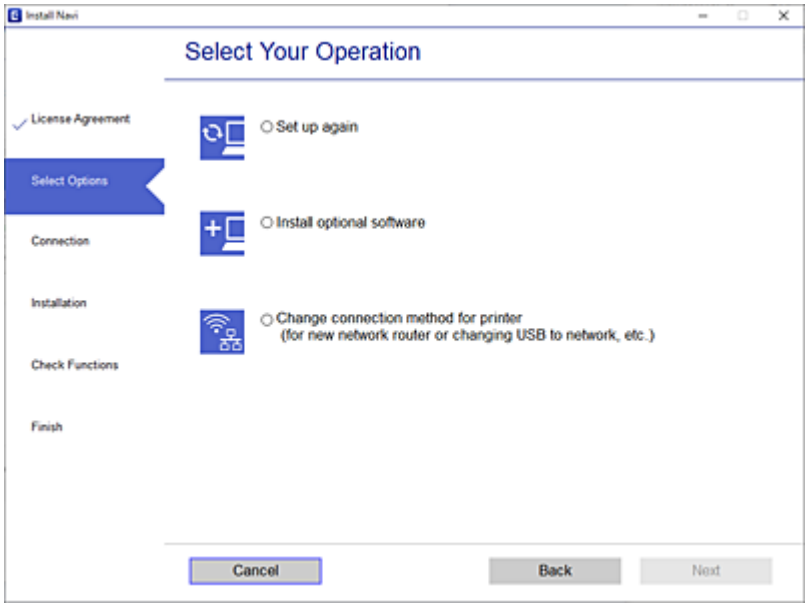

Select the network connection that you want to use, **Connect via wireless network (Wi-Fi)** or **Connect via wired LAN (Ethernet)**, and then click **Next**.

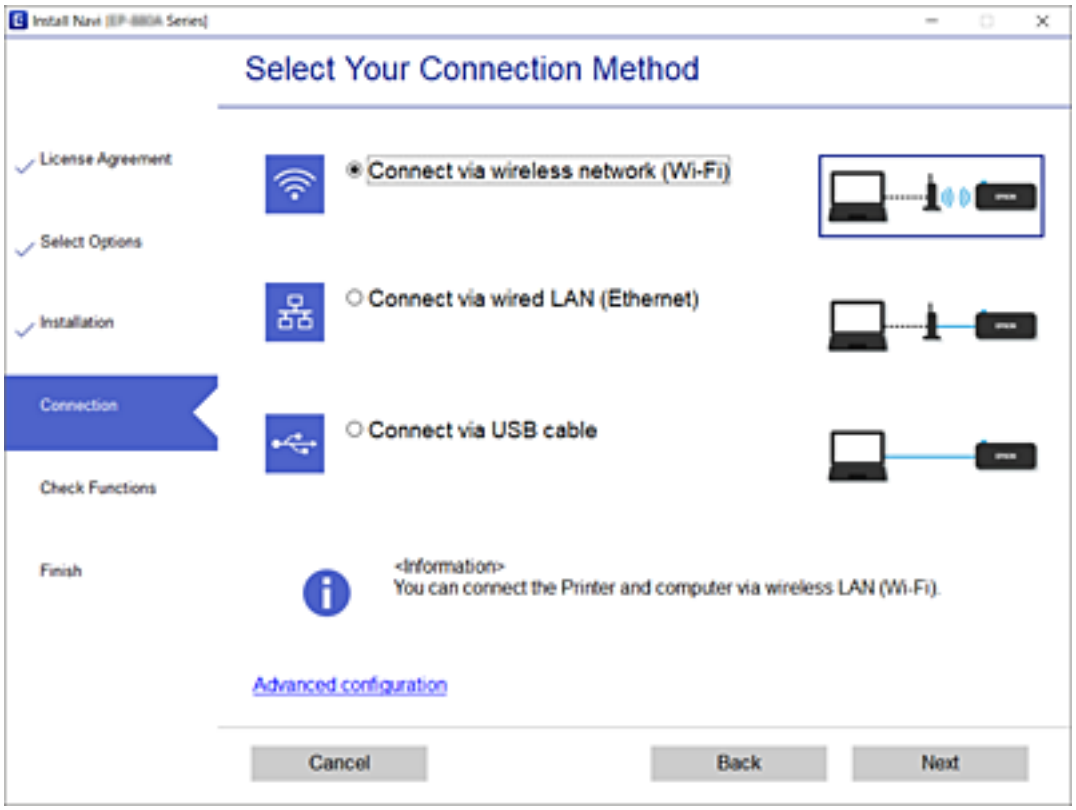

Follow the on-screen instructions.

Making Wi-Fi Settings from the Control Panel

You can make network settings from the printer's control panel in several ways. Choose the connection method that matches the environment and conditions that you are using.

If you know the information for the wireless router such as SSID and password, you can make settings manually.

If the wireless router supports WPS, you can make settings by using push button setup.

After connecting the printer to the network, connect to the printer from the device that you want to use (computer, smart device, tablet, and so on.)

Related Information

➡ "Making Wi-Fi Settings by Entering the SSID and Password" on page 264
➡ "Making Wi-Fi Settings by Push Button Setup (WPS)" on page 265
➡ "Making Wi-Fi Settings by PIN Code Setup (WPS)" on page 266

Making Wi-Fi Settings by Entering the SSID and Password

You can set up a Wi-Fi network by entering the information necessary to connect to a wireless router from the printer's control panel. To set up using this method, you need the SSID and password for a wireless router.

Note:
If you are using an wireless router with its default settings, the SSID and password are on the label. If you do not know the SSID and password, contact the person who set up the wireless router, or see the documentation provided with the wireless router.

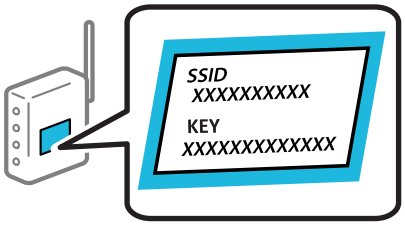

1. Tap on the home screen.

2. Select **Router**.

3. Tap **Start Setup**.

   If the network connection is already set up, the connection details are displayed. Tap **Change to Wi-Fi connection.** or **Change Settings** to change the settings.

4. Select **Wi-Fi Setup Wizard** .

5. Follow the on-screen instructions to select the SSID, enter the password for the wireless router, and start setup.

   If you want to check the network connection status for the printer after setup is complete, see the related information link below for details.

Note:

- ❏ *If you do not know the SSID, check if it is written on the label of the wireless router. If you are using the wireless router with its default settings, use the SSID written on the label. If you cannot find any information, see the documentation provided with the wireless router.*
- ❏ *The password is case-sensitive.*
- ❏ *If you do not know the password, check if the information is written on the label of the wireless router. On the label, the password may be written "Network Key", "Wireless Password", and so on. If you are using the wireless router with its default settings, use the password written on the label.*

Related Information

➡ "Entering Characters" on page 27
➡ "Checking the Network Connection Status" on page 277

Making Wi-Fi Settings by Push Button Setup (WPS)

You can automatically set up a Wi-Fi network by pressing a button on the wireless router. If the following conditions are met, you can set up by using this method.

- ❏ The wireless router is compatible with WPS (Wi-Fi Protected Setup).
- ❏ The current Wi-Fi connection was established by pressing a button on the wireless router.

Note:
If you cannot find the button or you are setting up using the software, see the documentation provided with the wireless router.

1. Tap on the home screen.
2. Select **Router**.
3. Tap **Start Setup**.

   If the network connection is already set up, the connection details are displayed. Tap **Change to Wi-Fi connection.** or **Change Settings** to change the settings.
4. Select **Push Button Setup(WPS)**.
5. Follow the on-screen instructions.

   If you want to check the network connection status for the printer after setup is complete, see the related information link below for details.

   Note:
   If connection fails, restart the wireless router, move it closer to the printer, and try again. If it still does not work, print a network connection report and check the solution.

Related Information

➡ "Checking the Network Connection Status" on page 277

Making Wi-Fi Settings by PIN Code Setup (WPS)

You can automatically connect to an wireless router by using a PIN code. You can use this method to set up if an wireless router is capable of WPS (Wi-Fi Protected Setup). Use a computer to enter a PIN code into the wireless router.

1. Tap on the home screen.

2. Select **Router**.

3. Tap **Start Setup**.

   If the network connection is already set up, the connection details are displayed. Tap **Change to Wi-Fi connection.** or **Change Settings** to change the settings.

4. Select **Others** > **PIN Code Setup(WPS)**

5. Follow the on-screen instructions.

   If you want to check the network connection status for the printer after setup is complete, see the related information link below for details.

   Note:
   See the documentation provided with your wireless router for details on entering a PIN code.

Related Information

➡ "Checking the Network Connection Status" on page 277

Connecting a Smart Device and Printer Directly (Wi-Fi Direct)

Wi-Fi Direct (Simple AP) allows you to connect a smart device directly to the printer without a wireless router and print from the smart device.

About Wi-Fi Direct

Use this connection method when you are not using Wi-Fi at home or at the office, or when you want to connect the printer and the computer or smart device directly. In this mode, the printer acts as an wireless router and you

can connect the devices to the printer without having to use a standard wireless router. However, devices directly connected to the printer cannot communicate with each other through the printer.

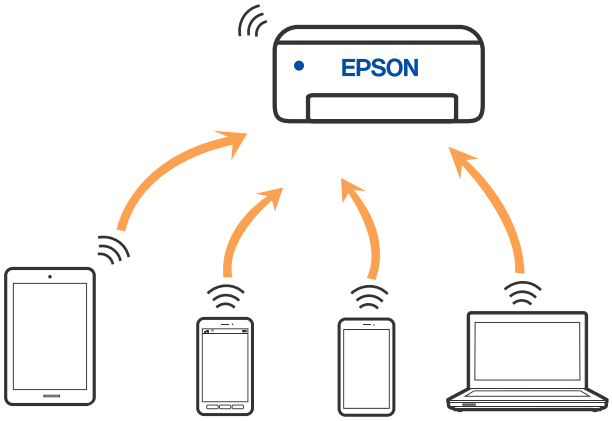

The printer can be connected by Wi-Fi or Ethernet, and Wi-Fi Direct (Simple AP) connection simultaneously. However, if you start a network connection in Wi-Fi Direct (Simple AP) connection when the printer is connected by Wi-Fi, the Wi-Fi is temporarily disconnected.

Connecting to an iPhone, iPad or iPod touch using Wi-Fi Direct

This method allows you to connect the printer directly to an iPhone, iPad or iPod touch without a wireless router. The following conditions are required to use this function. If your environment does not match these conditions, you can connect by selecting **Other OS Devices**. See the related information link below for details on connecting.

- ❏ iOS 11 or later
- ❏ Using the standard camera application to scan the QR code
- ❏ Epson iPrint version 7.0 or later

Epson printing app, such as Epson iPrint, is used to print from a smart device. Install Epson printing app on the smart device in advance.

Note:
You only need to make these settings for the printer and the smart device that you want to connect to once. Unless you disable Wi-Fi Direct or restore the network settings to their defaults, you do not need to make these settings again.

1. Tap on the home screen.
2. Tap **Wi-Fi Direct**.
3. Tap **Start Setup**.

4. Tap **iOS**.

The QR code is displayed on the printer's control panel.

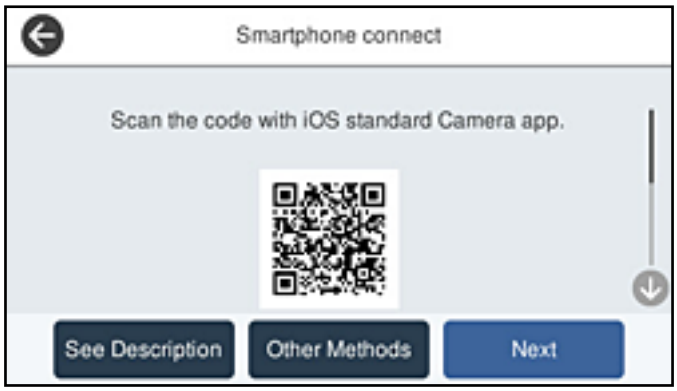

5. On your iPhone, iPad or iPod touch, start the standard Camera app, and then scan the QR code displayed on the printer's control panel in PHOTO mode.

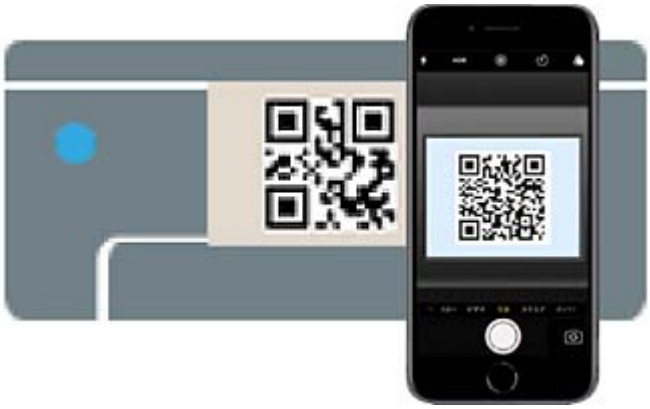

Use the Camera app for iOS 11 or later. You cannot connect to the printer using the Camera app for iOS 10 or earlier. Also, you cannot connect using an app for scanning QR codes. If you cannot connect, select **Other Methods** on the printer's control panel. See the related information link below for details on connecting.

6. Tap the notification displayed on the screen of the iPhone, iPad or iPod touch.

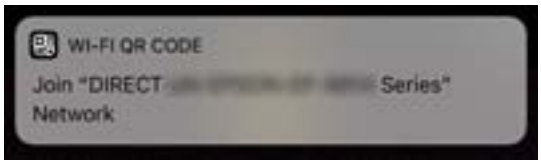

7. Tap **Join**.

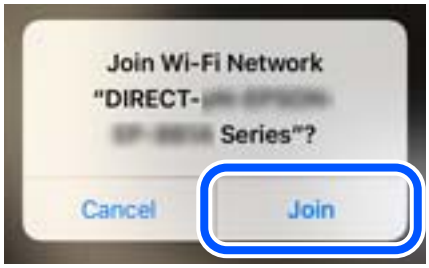

8. On the printer's control panel, select **Next**.

9. On the iPhone, iPad or iPod touch, start Epson printing app.

   Examples of Epson printing apps

10. On the Epson printing app screen, tap **Printer is not selected.**.

11. Select the printer that you want to connect to.

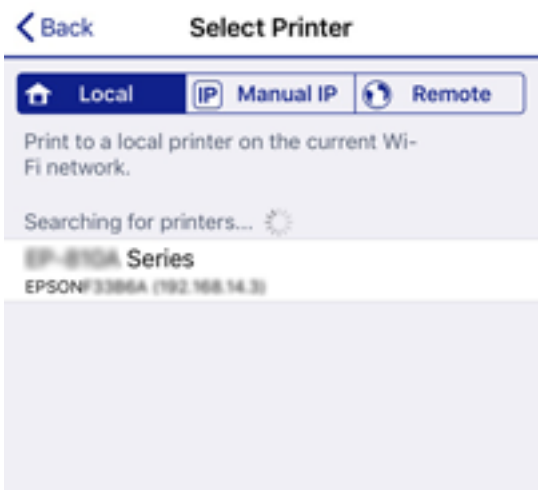

See the information displayed on the printer's control panel to select the printer.

12. On the printer's control panel, select **Complete**.

For smart devices that have been connected to the printer before, select the network name (SSID) on the smart device's Wi-Fi screen to connect them again.

Related Information

➡ "Application for Printing Easily from a Smart Device (Epson iPrint)" on page 296
➡ "Connecting to Devices other than iOS and Android using Wi-Fi Direct" on page 272

Connecting to Android Devices using Wi-Fi Direct

This method allows you to connect the printer directly to your Android device without a wireless router. The following conditions are required to use this function.

❏ Android 4.4 or later

❏ Epson iPrint version 7.0 or later

Epson iPrint is used to print from a smart device. Install Epson iPrint on the smart device in advance.

Note:
You only need to make these settings for the printer and the smart device that you want to connect to once. Unless you disable Wi-Fi Direct or restore the network settings to their defaults, you do not need to make these settings again.

1. Tap on the home screen.

2. Tap **Wi-Fi Direct**.

3. Tap **Start Setup**.

4. Tap **Android**.

5. On the smart device, start Epson iPrint.

6. On the Epson iPrint screen, tap **Printer is not selected.**.

7. Select the printer that you want to connect to.

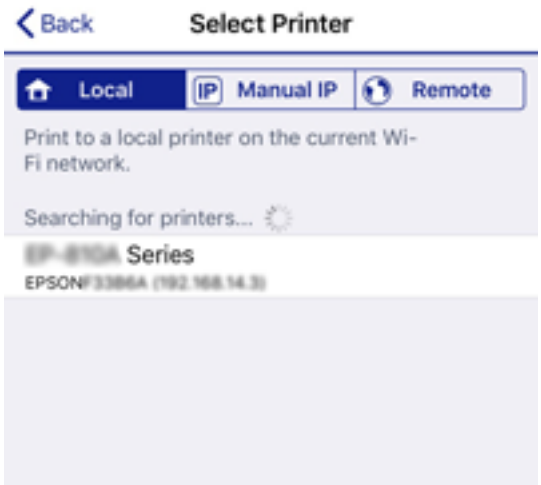

See the information displayed on the printer's control panel to select the printer.

Note:
Printers may not been displayed depending on the Android device. If printers are not displayed, connect by selecting ***Other OS Devices****. See the related information link below for connecting.*

8. When the device connection approval screen is displayed, select **Approve**.

9. When the device registration confirmation screen is displayed, select whether you register the approved device to the printer.

10. On the printer's control panel, select **Complete**.

For smart devices that have been connected to the printer before, select the network name (SSID) on the smart device's Wi-Fi screen to connect them again.

Related Information

➡ "Application for Printing Easily from a Smart Device (Epson iPrint)" on page 296
➡ "Connecting to Devices other than iOS and Android using Wi-Fi Direct" on page 272

Connecting to Devices other than iOS and Android using Wi-Fi Direct

This method allows you to connect the printer directly to smart devices without a wireless router.

Note:
You only need to make these settings for the printer and the smart device that you want to connect to once. Unless you disable Wi-Fi Direct or restore the network settings to their defaults, you do not need to make these settings again.

1. Tap on the home screen.

2. Tap **Wi-Fi Direct**.

3. Tap **Start Setup**.

4. Tap **Other OS Devices**.

The Network Name (SSID) and Password for Wi-Fi Direct for the printer are displayed.

5. On the smart device's Wi-Fi screen, select the SSID shown on the printer's control panel, and then enter the password.

6. On the printer's control panel, select **Next**.

7. On the smart device, start Epson printing app.

   Examples of Epson printing apps

   Epson iPrint Epson Creative Print

8. On the Epson printing app screen, tap **Printer is not selected.**.

9. Select the printer that you want to connect to.

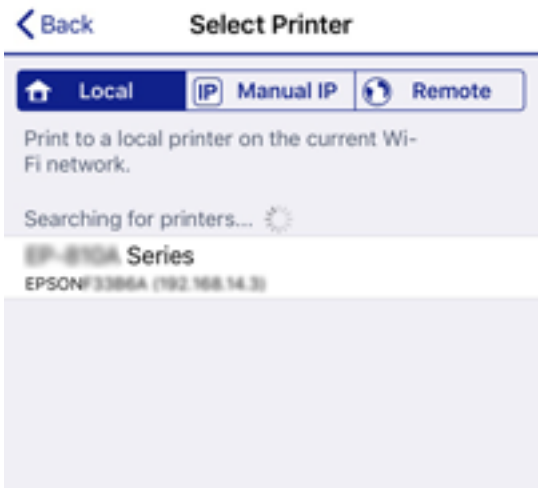

   See the information displayed on the printer's control panel to select the printer.

10. On the printer's control panel, select **Complete**.

For smart devices that have been connected to the printer before, select the network name (SSID) on the smart device's Wi-Fi screen to connect them again.

Related Information

➡ "Application for Printing Easily from a Smart Device (Epson iPrint)" on page 296

Disconnecting Wi-Fi Direct (Simple AP) Connection

There are two methods available to disable a Wi-Fi Direct (Simple AP) connection; you can disable all connections by using the printer's control panel, or disable each connection from the computer or the smart device. When you want to disable all connections, see the related information link below for details.

> ***Important:***
> *When Wi-Fi Direct (Simple AP) connection disabled, all computers and smart devices connected to the printer in Wi-Fi Direct (Simple AP) connection are disconnected.*

Note:
If you want to disconnect a specific device, disconnect from the device instead of the printer. Use one of the following methods to disconnect the Wi-Fi Direct (Simple AP) connection from the device.

- *Disconnect the Wi-Fi connection to the printer's network name (SSID).*
- *Connect to another network name (SSID).*

Changing the Wi-Fi Direct (Simple AP) Settings Such as the SSID

When Wi-Fi Direct (simple AP) connection is enabled, you can change the settings from > **Wi-Fi Direct** > **Start Setup** > **Change**, and then the following menu items are displayed.

Change Network Name

Change the Wi-Fi Direct (simple AP) network name (SSID) used for connecting to the printer to your arbitrary name. You can set the network name (SSID) in ASCII characters that is displayed on the software keyboard on the control panel. You can enter up to 22 characters.

When changing the network name (SSID), all connected devices are disconnected. Use the new network name (SSID) if you want to re-connect the device.

Change Password

Change the Wi-Fi Direct (simple AP) password for connecting to the printer to your arbitrary value. You can set the password in ASCII characters that is displayed on the software keyboard on the control panel. You can enter 8 to 22 characters.

When changing the password, all connected devices are disconnected. Use the new password if you want to re-connect the device.

Change Frequency Range

Change the frequency range of Wi-Fi Direct used for connecting to the printer. You can select 2.4 GHz or 5 GHz.

When changing the frequency range, all connected devices are disconnected. Re-connect the device.

Note that you cannot re-connect from devices that do not support 5 GHz frequency range when changing to 5 GHz.

Depending on the region, this setting may not be displayed.

Disable Wi-Fi Direct

Disable Wi-Fi Direct (simple AP) settings of the printer. When disabling it, all devices connected to the printer in Wi-Fi Direct (Simple AP) connection are disconnected.

Restore Default Settings

Restore all Wi-Fi Direct (simple AP) settings to their defaults.

The Wi-Fi Direct (simple AP) connection information of the smart device saved to the printer is deleted.

Note:
*You can also set up from the **Network** tab > **Wi-Fi Direct** on Web Config for the following settings.*

- *Enabling or disabling Wi-Fi Direct (simple AP)*
- *Changing network name (SSID)*
- *Changing password*
- *Changing the frequency range*
  Depending on the region, this setting may not be displayed.
- *Restoring the Wi-Fi Direct (simple AP) settings*

Checking the Network Connection Status

You can check the network connection status in the following way.

Related Information

➡ "Checking the Network Connection Status from the Control Panel" on page 277
➡ "Printing a Network Connection Report" on page 278

Checking the Network Connection Status from the Control Panel

You can check the network connection status using the network icon or the network information on the printer's control panel.

Checking the Network Connection Status using the Network Icon

You can check the network connection status and strength of the radio wave using the network icon on the printer's home screen.

Related Information

➡ "Guide to the Network Icon" on page 25

Displaying Detailed Network Information on the Control Panel

When your printer is connected to the network, you can also view other network-related information by selecting the network menus you want to check.

1. Select **Settings** on the home screen.
2. Select **General Settings** > **Network Settings** > **Network Status**.
3. To check the information, select the menus that you want to check.
   - ❏ Wired LAN/Wi-Fi Status

     Displays the network information (device name, connection, signal strength, and so on) for Ethernet or Wi-Fi connections.
   - ❏ Wi-Fi Direct Status

     Displays whether Wi-Fi Direct is enabled or disabled, and the SSID, password and so on for Wi-Fi Direct connections.
   - ❏ Email Server Status

     Displays the network information for email server.
   - ❏ Print Status Sheet

     Prints a network status sheet. The information for Ethernet, Wi-Fi, Wi-Fi Direct, and so on is printed on two or more pages.

Printing a Network Connection Report

You can print a network connection report to check the status between the printer and the wireless router.

1. Select **Settings** on the home screen.
2. Select **General Settings** > **Network Settings** > **Connection Check**.

   The connection check starts.
3. Select **Print Check Report**.
4. Print the network connection report.

   If an error has occurred, check the network connection report, and then follow the printed solutions.

Related Information

➡ "Messages and Solutions on the Network Connection Report" on page 279

Messages and Solutions on the Network Connection Report

Check the messages and error codes on the network connection report, and then follow the solutions.

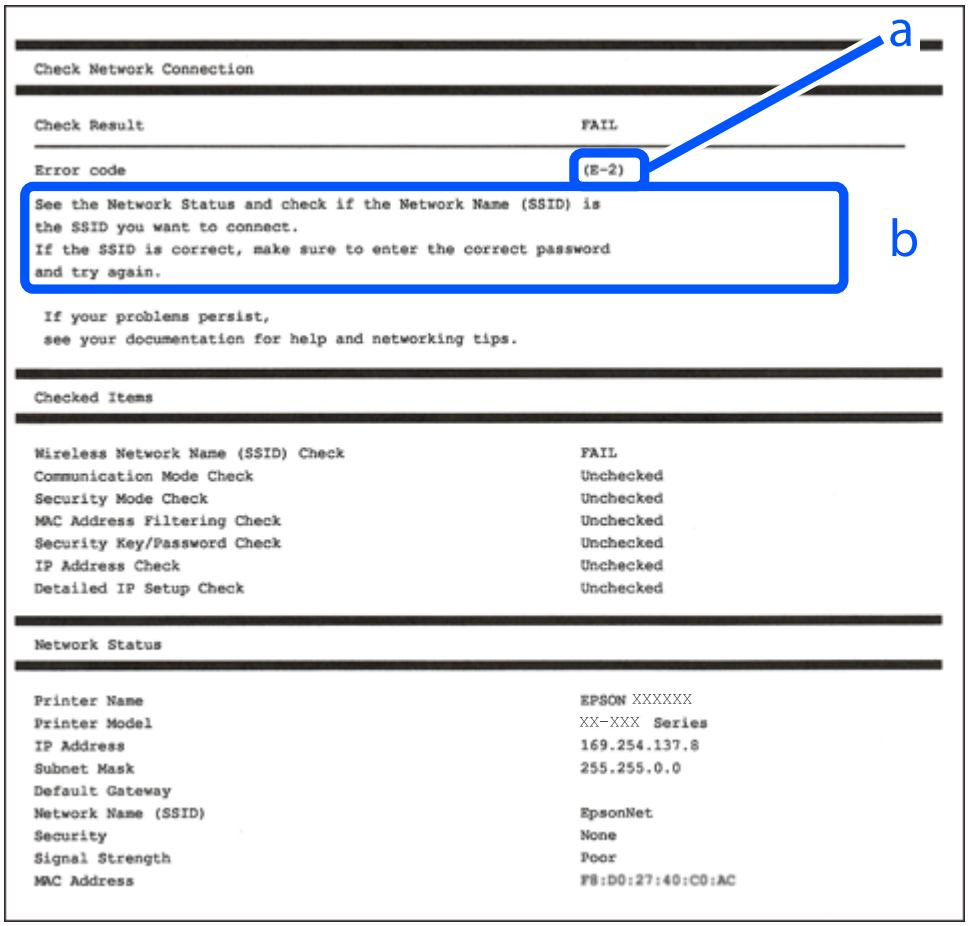

a. Error code

b. Messages on the Network Environment

Related Information

- ➡ "E-1" on page 280
- ➡ "E-2, E-3, E-7" on page 280
- ➡ "E-5" on page 281
- ➡ "E-6" on page 281
- ➡ "E-8" on page 281
- ➡ "E-9" on page 282
- ➡ "E-10" on page 282
- ➡ "E-11" on page 282
- ➡ "E-12" on page 283
- ➡ "E-13" on page 283
- ➡ "Message on the Network Environment" on page 284

E-1

Solutions:

- ❏ Make sure the Ethernet cable is securely connected to your printer and to your hub or other network device.
- ❏ Make sure your hub or other network device is turned on.
- ❏ If you want to connect the printer by Wi-Fi, make Wi-Fi settings for the printer again because it is disabled.

E-2, E-3, E-7

Solutions:

- ❏ Make sure your wireless router is turned on.
- ❏ Confirm that your computer or device is connected correctly to the wireless router.
- ❏ Turn off the wireless router. Wait for about 10 seconds, and then turn it on.
- ❏ Place the printer closer to your wireless router and remove any obstacles between them.
- ❏ If you have entered the SSID manually, check if it is correct. Check the SSID from the **Network Status** part on the network connection report.
- ❏ If an wireless router has multiple SSIDs, select the SSID that is displayed. When the SSID is using a non-compliant frequency, the printer does not display them.
- ❏ If you are using push button setup to establish a network connection, make sure your wireless router supports WPS. You cannot use push button setup if your wireless router does not support WPS.
- ❏ Makes sure your SSID uses only ASCII characters (alphanumeric characters and symbols). The printer cannot display an SSID that contains non-ASCII characters.
- ❏ Makes sure you know your SSID and password before connecting to the wireless router. If you are using a wireless router with its default settings, the SSID and password are located on a label on the wireless router. If you do not know your SSID and password, contact the person who set up the wireless router, or see the documentation provided with the wireless router.
- ❏ If you are connecting to an SSID generated from a tethering smart device, check for the SSID and password in the documentation provided with the smart device.
- ❏ If your Wi-Fi connection suddenly disconnects, check for the conditions below. If any of these conditions are applicable, reset your network settings by downloading and running the software from the following website.

  http://epson.sn > **Setup**

  - ❏ Another smart device was added to the network using push button setup.
  - ❏ The Wi-Fi network was set up using any method other than push button setup.

Related Information

➡ "Making Settings for Connecting to the Computer" on page 261
➡ "Making Wi-Fi Settings from the Control Panel" on page 264

E-5

Solutions:

Make sure the wireless router's security type is set to one of the following. If it is not, change the security type on the wireless router, and then reset the printer's network settings.

- ❏ WEP-64 bit (40 bit)
- ❏ WEP-128 bit (104 bit)
- ❏ WPA PSK (TKIP/AES)*
- ❏ WPA2 PSK (TKIP/AES)*
- ❏ WPA (TKIP/AES)
- ❏ WPA2 (TKIP/AES)
- ❏ WPA3-SAE (AES)
- ❏ WPA2/WPA3-Enterprise

* WPA PSK is also known as WPA Personal. WPA2 PSK is also known as WPA2 Personal.

E-6

Solutions:

- ❏ Check if MAC address filtering is disabled. If it is enabled, register the printer's MAC address so that it is not filtered. See the documentation provided with the wireless router for details. You can check the printer's MAC address from the **Network Status** part on the network connection report.
- ❏ If your wireless router is using shared authentication with WEP security, make sure the authentication key and index are correct.
- ❏ If the number of connectable devices on the wireless router is less than the number of network devices that you want to connect, make settings on the wireless router to increase the number of connectable devices. See the documentation provided with the wireless router to make settings.

Related Information

➡ "Making Settings for Connecting to the Computer" on page 261

E-8

Solutions:

- ❏ Enable DHCP on the wireless router if the printer's Obtain IP Address setting is set to Auto.
- ❏ If the printer's Obtain IP Address setting is set to Manual, the IP address you manually set is invalid due to out of range (for example: 0.0.0.0). Set a valid IP address from the printer's control panel.

Related Information

➡ "Network Settings" on page 306

E-9

Solutions:

Check the following.

❏ Devices are turned on.

❏ You can access the Internet and other computers or network devices on the same network from the devices you want to connect to the printer.

If still does not connect your printer and network devices after confirming the above, turn off the wireless router. Wait for about 10 seconds, and then turn it on. Then reset your network settings by downloading and running the installer from the following website.

http://epson.sn > **Setup**

Related Information

➡ "Making Settings for Connecting to the Computer" on page 261

E-10

Solutions:

Check the following.

❏ Other devices on the network are turned on.

❏ Network addresses (IP address, subnet mask, and default gateway) are correct if you have set the printer's Obtain IP Address to Manual.

Reset the network address if they are incorrect. You can check the IP address, subnet mask, and default gateway from the **Network Status** part on the network connection report.

Related Information

➡ "Network Settings" on page 306

E-11

Solutions:

Check the following.

❏ The default gateway address is correct if you set the printer's TCP/IP Setup setting to Manual.

❏ The device that is set as the default gateway is turned on.

Set the correct default gateway address. You can check the default gateway address from the **Network Status** part on the network connection report.

Related Information

➡ "Network Settings" on page 306

E-12

Solutions:

Check the following.

- ❏ Other devices on the network are turned on.
- ❏ The network addresses (IP address, subnet mask, and default gateway) are correct if you are entering them manually.
- ❏ The network addresses for other devices (subnet mask and default gateway) are the same.
- ❏ The IP address does not conflict with other devices.

If still does not connect your printer and network devices after confirming the above, try the following.

- ❏ Turn off the wireless router. Wait for about 10 seconds, and then turn it on.
- ❏ Make network settings again using the installer. You can run it from the following website.

  http://epson.sn > **Setup**
- ❏ You can register several passwords on a wireless router that uses WEP security type. If several passwords are registered, check if the first registered password is set on the printer.

Related Information

➡ "Network Settings" on page 306
➡ "Making Settings for Connecting to the Computer" on page 261

E-13

Solutions:

Check the following.

- ❏ Network devices such as a wireless router, hub, and router are turned on.
- ❏ The TCP/IP Setup for network devices has not been set up manually. (If the printer's TCP/IP Setup is set automatically while the TCP/IP Setup for other network devices is performed manually, the printer's network may differ from the network for other devices.)

If it still does not work after checking the above, try the following.

- ❏ Turn off the wireless router. Wait for about 10 seconds, and then turn it on.
- ❏ Make network settings on the computer that is on the same network as the printer using the installer. You can run it from the following website.

  http://epson.sn > **Setup**
- ❏ You can register several passwords on a wireless router that uses the WEP security type. If several passwords are registered, check if the first registered password is set on the printer.

Related Information

➡ "Network Settings" on page 306
➡ "Making Settings for Connecting to the Computer" on page 261

Message on the Network Environment

Message	Solution
The Wi-Fi environment needs to be improved. Turn the wireless router off and then turn it on. If the connection does not improve, see the documentation for the wireless router.	After moving the printer closer to the wireless router and removing any obstacles between them, turn off the wireless router. Wait for about 10 seconds, and then turn it on. If it still does not connect, see the documentation supplied with the wireless router.
*No more devices can be connected. Disconnect one of the connected devices if you want to add another one.	Computer and smart devices that can be connected simultaneously are connected in full in the Wi-Fi Direct (Simple AP) connection. To add another computer or smart device, disconnect one of the connected devices or connect it to the other network first. You can confirm the number of wireless devices which can be connected simultaneously and the number of connected devices by checking the network status sheet or the printer's control panel.
The same SSID as Wi-Fi Direct exists in the environment. Change the Wi-Fi Direct SSID if you cannot connect a smart device to the printer.	On the printer's control panel, go to Wi-Fi Direct Setup screen and select the menu to change the setting. You can change the network name following after DIRECT-XX-. Enter within 22 characters.

Printing a Network Status Sheet

You can check the detailed network information by printing it.

1. Select **Settings** on the home screen.
2. Select **General Settings** > **Network Settings** > **Network Status**.
3. Select **Print Status Sheet**.
4. Check the message, and then print the network status sheet.

Checking the Network of the Computer (Windows only)

By using the command prompt, check the connection status of the computer and the connection path to the printer. This will lead you to solve the problems.

❏ ipconfig command

Display the connection status of the network interface that is currently used by the computer.

By comparing the setting information with actual communication, you can check whether the connection is correct. In case there are multiple DHCP servers on the same network, you can find out the actual address assigned to the computer, the referred DNS server, etc.

❏ Format : ipconfig /all

❏ Examples :

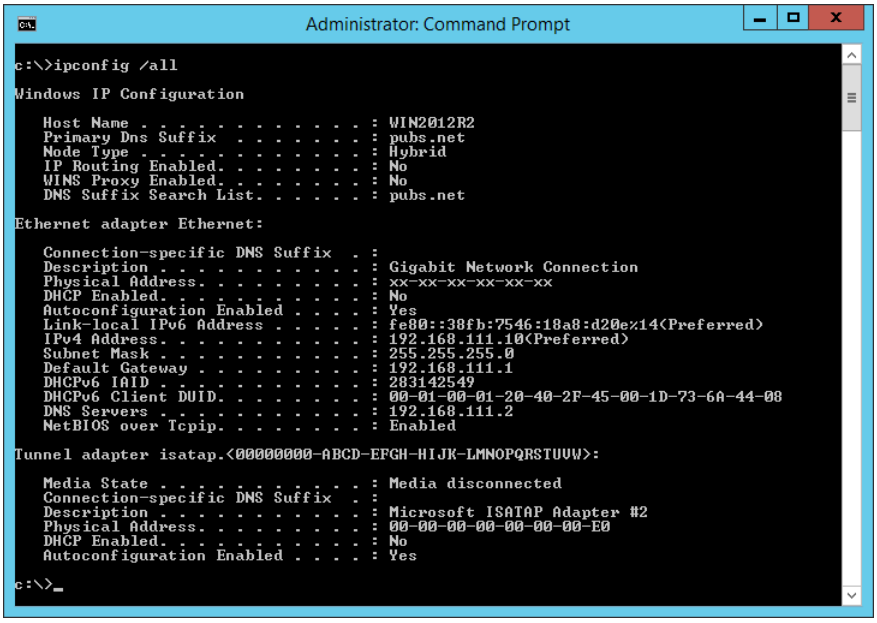

❏ pathping command

You can confirm the list of routers passing through the destination host and the routing of communication.

❏ Format : pathping xxx.xxx.xxx.xxx

❏ Examples : pathping 192.0.2.222

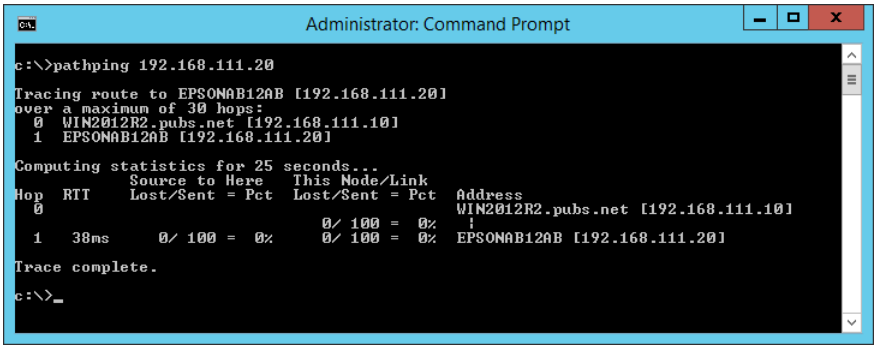

Product Information

Paper Information. 287

Consumable Products Information. 292

Software Information. 293

Settings Menu List. 302

Product Specifications. 325

Regulatory Information. 337

Paper Information

Available Paper and Capacities

Genuine Epson Paper

Epson recommends using genuine Epson paper to ensure high-quality printouts.

Note:

- *The availability of paper varies by location. For the latest information on paper available in your area, contact Epson support.*
- *See the following for information on available paper types for borderless and 2-sided printing.*

"Paper for Borderless Printing" on page 290

"Paper for 2-Sided Printing" on page 291

Paper suitable for printing documents

Media Name	Size	Loading Capacity (Sheets)		
		Paper Cassette 1	Paper Cassette 2	Paper Tray
Epson Business Paper	A4	250		50
Epson Bright White Ink Jet Paper	A4	250		50

Paper suitable for printing documents and photos

Media Name	Size	Loading Capacity (Sheets)		
		Paper Cassette 1	Paper Cassette 2	Paper Tray
Epson Photo Quality Ink Jet Paper	A4	100	-	20
Epson Double-sided Photo Quality Ink Jet Paper	A4	1	-	1
Epson Matte Paper-Heavyweight	A4, 20x25 cm (8x 10 in.)	50	-	20

Paper suitable for printing photos

Media Name	Size	Loading Capacity (Sheets)		
		Paper Cassette 1	Paper Cassette 2	Paper Tray
Epson Ultra Glossy Photo Paper	A4, 13x18 cm (5x7 in.), 10x15 cm (4x6 in.), 20x25 cm (8x10 in.)	50	-	20
Epson Premium Glossy Photo Paper	A4, 13x18 cm (5x7 in.), 10x15 cm (4x6 in.), 20x25 cm (8x10 in.), 16:9 wide (4x7.11 in.)	50	-	20
Epson Premium Semigloss Photo Paper	A4, 13x18 cm (5x7in.), 10x15 cm(4x6 in.)	50	-	20
Epson Photo Paper Glossy	A4, 13x18 cm (5x7in.), 10x15 cm(4x6 in.)	50	-	20

Commercially Available Paper

Note:
See the following for information on available paper types for borderless and 2-sided printing.

"Paper for Borderless Printing" on page 290

"Paper for 2-Sided Printing" on page 291

Plain papers

Media Name	Size	Loading Capacity (Sheets)		
		Paper Cassette 1	Paper Cassette 2	Paper Tray
Plain paper, Copy paper Preprinted paper*1 Letterhead Color paper Recycled paper High quality plain paper	Legal, Letter, 8.5×13 in., A4, Executive*2, B5, 16K (195×270 mm), Indian-Legal, SP1 (210×270 mm)	250		50
	A5, A6, B6, SP2 (210×149 mm), SP3 (100×170mm), SP4 (130×182 mm), SP5 (192×132 mm)	250	–	50
	User Defined*2(mm) 89 to 215.9×127 to 355.6	250	–	–
	User Defined*2(mm) 89 to 215.9×355.7 to 1200	1	–	–
	User Defined*2(mm) 182 to 215.9×257 to 355.6	–	250	–
	User Defined*2(mm) 182 to 215.9×355.7 to 1200	–	1	–
	User Defined*2(mm) 64 to 215.9×127 to 355.6	–	–	50
	User Defined*2(mm) 64 to 215.9×355.7 to 6000	–	–	1

*1 Paper on which various forms are pre-printed such as slips or securities.

*2 Only printing from computer is available.

Thick papers

Media Name	Size	Loading Capacity (Sheets)		
		Paper Cassette 1	Paper Cassette 2	Paper Tray
Thick paper	Legal, Letter, 8.5×13 in., A4, Executive*, B5, A5, A6, B6, 16K (195×270 mm), Indian-Legal, SP1 (210×270 mm), SP2 (210×149 mm), SP3 (100×170mm), SP4 (130×182 mm), SP5 (192×132 mm)	50	–	20
	User Defined*(mm) 89 to 215.9×127 to 355.6	50	–	–
	User Defined*(mm) 89 to 215.9×355.7 to 1200	1	–	–
	User Defined*(mm) 64 to 215.9×127 to 355.6	–	–	20
	User Defined*(mm) 64 to 215.9×355.7 to 6000	–	–	1

* Only printing from computer is available.

Envelope

Media Name	Size	Loading Capacity (Envelopes)		
		Paper Cassette 1	Paper Cassette 2	Paper Tray
Envelope	Envelope #10, Envelope DL, Envelope C6	10	–	10
	Envelope C4	–	–	10

Paper for Borderless Printing

Genuine Epson Paper

- ❏ Epson Business Paper
- ❏ Epson Bright White Ink Jet Paper
- ❏ Epson Photo Quality Ink Jet Paper
- ❏ Epson Double-sided Photo Quality Ink Jet Paper

- ❏ Epson Matte Paper-Heavyweight
- ❏ Epson Ultra Glossy Photo Paper
- ❏ Epson Premium Glossy Photo Paper
- ❏ Epson Premium Semigloss Photo Paper
- ❏ Epson Photo Paper Glossy

Related Information

➡ "Available Paper and Capacities" on page 287

Commercially Available Paper

- ❏ Plain paper, Copy paper, Preprinted paper, Letterhead, Color paper, Recycled paper, High quality plain paper (Letter, A4)
- ❏ Thick paper (Letter, A4)

Related Information

➡ "Available Paper and Capacities" on page 287

Paper for 2-Sided Printing

Genuine Epson Paper

- ❏ Epson Business Paper
- ❏ Epson Bright White Ink Jet Paper
- ❏ Epson Double-sided Photo Quality Ink Jet Paper

Related Information

➡ "Available Paper and Capacities" on page 287

Commercially Available Paper

- ❏ Plain paper, Copy paper, Preprinted paper, Letterhead, Color paper, Recycled paper, High quality plain paper*
- ❏ Thick paper*

* SP2, SP3, SP4, SP5 size paper is not supported for automatic 2-sided printing.

For automatic 2-sided printing with User Defined paper sizes, you can use 182 to 215.9 x 257 to 297 mm paper sizes.

Related Information

➡ "Available Paper and Capacities" on page 287

Unavailable Paper Types

Do not use the following papers. Using these types of paper causes paper jams and smears on the printout.

- ❏ Papers that are wavy
- ❏ Papers that are torn or cut
- ❏ Papers that are folded
- ❏ Papers that are damp
- ❏ Papers that are too thick or too thin
- ❏ Papers that have stickers

Do not use the following envelopes. Using these types of envelope causes paper jams and smears on the printout.

- ❏ Envelopes that are curled or folded
- ❏ Envelopes with adhesive surfaces on the flaps or window envelopes
- ❏ Envelopes that are too thin
  They may curl during printing.

Consumable Products Information

Ink Bottle Codes

Epson recommends the use of genuine Epson ink bottles.

The following are the codes for genuine Epson ink bottles.

Important:

- ❏ *Epson warranty does not cover damage caused by inks other than those specified, including any genuine Epson ink not designed for this printer or any third party ink.*
- ❏ *Other products not manufactured by Epson may cause damage that is not covered by Epson's warranties, and under certain circumstances, may cause erratic printer behavior.*

Note:

- ❏ *Ink bottle codes may vary by location. For the correct codes in your area, contact Epson support.*
- ❏ *Although the ink bottles may contain recycled materials, this does not affect printer function or performance.*
- ❏ *Specifications and appearance of the ink bottle are subject to change without prior notice for improvement.*

For Europe

Product	BK: Black	C: Cyan	M: Magenta	Y: Yellow
ET-5800	113	113	113	113
L6550	112	112	112	112

Note:
Visit the following website for information on Epson's ink bottle yields.

http://www.epson.eu/pageyield

For Australia and New Zealand

BK: Black	C: Cyan	M: Magenta	Y: Yellow
542	542	542	542

For Asian countries except for China

BK: Black	C: Cyan	M: Magenta	Y: Yellow
008	008	008	008

Maintenance Box Code

Epson recommends the use of a genuine Epson maintenance box.

Maintenance box code: C9345

Important:
Once a maintenance box has been installed in a printer it cannot be used with other printers.

Software Information

This section introduces the network services and software products available for your printer from the Epson website or the supplied software disc.

Software for Printing

Application for Printing from a Computer (Windows Printer Driver)

The printer driver controls the printer according to the commands from an application. Making settings on the printer driver provides the best printing results. You can also check the status of the printer or keep it in top operating condition using the printer driver utility.

Note:
You can change the language of the printer driver. Select the language you want to use from the ***Language*** *setting on the* ***Maintenance*** *tab.*

Accessing the printer driver from applications

To make settings that apply only to the application you are using, access from that application.

Select **Print** or **Print Setup** from the **File** menu. Select your printer, and then click **Preferences** or **Properties**.

Note:
Operations differ depending on the application. See the application's help for details.

Accessing the printer driver from the control panel

To make settings that apply to all of the applications, access from the control panel.

❏ Windows 10/Windows Server 2019/Windows Server 2016

Click on the start button, and then select **Windows System** > **Control Panel** > **View devices and printers** in **Hardware and Sound**. Right-click on your printer, or press and hold it and then select **Printing preferences**

❏ Windows 8.1/Windows 8/Windows Server 2012 R2/Windows Server 2012

Select **Desktop** > **Settings** > **Control Panel** > **View devices and printers** in **Hardware and Sound**. Right-click on your printer, or press and hold it and then select **Printing preferences**

❏ Windows 7/Windows Server 2008 R2

Click the start button, and select **Control Panel** > **View devices and printers** in **Hardware and Sound**. Right-click on your printer and select **Printing preferences**.

❏ Windows Vista/Windows Server 2008

Click the start button, and select **Control Panel** > **Printers** in **Hardware and Sound**. Right-click on your printer and select **Printing preferences**.

❏ Windows XP/Windows Server 2003 R2/Windows Server 2003

Click the start button, and select **Control Panel** > **Printers and Other Hardware** > **Printers and Faxes**. Right-click on your printer and select **Printing preferences**.

Accessing the printer driver from the printer icon on the task bar

The printer icon on the desktop task bar is a shortcut icon allowing you to quickly access the printer driver.

If you click the printer icon and select **Printer Settings**, you can access the same printer settings window as the one displayed from the control panel. If you double-click this icon, you can check the status of the printer.

Note:
*If the printer icon is not displayed on the task bar, access the printer driver window, click **Monitoring Preferences** on the **Maintenance** tab, and then select **Register the shortcut icon to the taskbar**.*

Starting the utility

Access the printer driver window. Click the **Maintenance** tab.

Related Information

➡ "Menu Options for the Printer Driver" on page 42

Application for Printing from a Computer (Mac OS Printer Driver)

The printer driver controls the printer according to the commands from an application. Making settings on the printer driver provides the best printing results. You can also check the status of the printer or keep it in top operating condition using the printer driver utility.

Accessing the printer driver from applications

Click **Page Setup** or **Print** on the **File** menu of your application. If necessary, click **Show Details** (or ▼) to expand the print window.

Note:
*Depending on the application being used, **Page Setup** may not be displayed in the **File** menu, and the operations for displaying the print screen may differ.See the application's help for details.*

Starting the utility

Select **System Preferences** from the Apple menu > **Printers & Scanners** (or **Print & Scan**, **Print & Fax**), and then select the printer. Click **Options & Supplies** > **Utility** > **Open Printer Utility**.

Related Information

➡ "Menu Options for the Printer Driver" on page 66

Guide to Mac OS Printer Driver

Epson Printer Utility

You can run a maintenance feature such as nozzle check and print head cleaning, and by starting **EPSON Status Monitor**, you can check printer status and error information.

Application for Quick and Fun Printing from a Computer (Epson Photo+)

Epson Photo+ is an application that allows you to easily print images with a variety of layouts. You can also perform image correction and adjust the position while viewing a preview of your document. You can also brighten up your images by adding text and stamps wherever you like. When printing on genuine Epson photo paper, the ink performance is maximized creating a beautiful finish with excellent coloring.

See the application's help for details.

Note:

- *Windows Server operating systems are not supported.*
- *To use this application the printer driver for this printer must be installed.*

Starting on Windows

- Windows 10

  Click the start button, and then select **Epson Software** > **Epson Photo+**.

- Windows 8.1/Windows 8

  Enter the application name in the search charm, and then select the displayed icon.

- Windows 7/Windows Vista/Windows XP

  Click the start button, and select **All Programs** or **Programs** > **Epson Software** > **Epson Photo+**.

Starting on Mac OS

Select **Go** > **Applications** > **Epson Software** > **Epson Photo+**.

Related Information

➡ "Installing the Applications Separately" on page 156

Application for Printing Easily from a Smart Device (Epson iPrint)

Epson iPrint is an application that allows you to print photos, documents, and web pages from a smart device such as a smartphone or tablet. You can use local print, printing from a smart device that is connected to the same wireless network as your printer, or remote print, printing from a remote location over the Internet. To use remote print, register your printer in the Epson Connect service.

Installing Epson iPrint

You can install Epson iPrint on your smart device from the following URL or QR code.

http://ipr.to/c

Application for Printing Easily from an Android Application (Epson Print Enabler)

Epson Print Enabler is an application that allows you to wirelessly print your documents, emails, photos, and web pages right from your Android phone or tablet (Android v4.4 or later). With a few taps, your Android device will discover an Epson printer that is connected to the same wireless network.

Search for and install Epson Print Enabler from Google Play.

Software for Scanning

Application for Scanning from a Computer (Epson ScanSmart)

This application allows you to scan documents easily, and then save the scanned images in simple steps.

See the Epson ScanSmart help for details on using the features.

Starting on Windows

❏ Windows 10

Click the start button, and then select **Epson Software** > **Epson ScanSmart**.

❏ Windows 8.1/Windows 8

Enter the application name in the search charm, and then select the displayed icon.

❏ Windows 7

Click the start button, and then select **All Programs** > **Epson Software** > **Epson ScanSmart**.

Starting on Mac OS

Select **Go** > **Applications** > **Epson Software** > **Epson ScanSmart**.

Software for Faxing

Application for Configuring Fax Operations and Sending Faxes (FAX Utility)

FAX Utility is an application that allows you to configure various settings for sending faxes from a computer. You can create or edit the contacts list to be used when sending a fax, configure to save received faxes in PDF format on the computer, and so on. See the application's help for details.

Note:

❏ *Windows Server operating systems are not supported.*

❏ *Make sure you have installed the printer driver before installing FAX Utility.*

❏ *Make sure the FAX Utility has been installed. See "Starting on Windows" or "Starting on Mac OS" below to check if the application has been installed.*

Starting on Windows

❏ Windows 10

Click the start button, and select **Epson Software** > **FAX Utility**.

❏ Windows 8.1/Windows 8

Enter the application name in the search charm, and then select the displayed icon.

❏ Windows 7/Windows Vista/Windows XP

Click the start button, and select **All Programs** (or **Programs**) > **Epson Software** > **FAX Utility**.

Starting on Mac OS

Select **System Preferences** from the Apple menu > **Printers & Scanners** (or **Print & Scan**, **Print & Fax**), and then select the printer (FAX). Click **Options & Supplies** > **Utility** > **Open Printer Utility**.

Related Information

➡ "Sending a Fax from a Computer" on page 137
➡ "Receiving Faxes on a Computer" on page 141

Application for Sending Faxes (PC-FAX Driver)

PC-FAX driver is an application that allows you to send a document created on a separate application as a fax directly from the computer. PC-FAX driver is installed when you install FAX Utility. See the application's help for details.

Note:

❏ *Windows Server operating systems are not supported.*

❏ *Check if PC-FAX driver has been installed. See "Accessing from Windows" or "Accessing from Mac OS" below.*

❏ *The operation differs depending on the application you used to create the document. See the application's help for details.*

Accessing from Windows

In the application, select **Print** or **Print Setup** from the **File** menu. Select your printer (FAX), and then click **Preferences** or **Properties**.

Accessing from Mac OS

In the application, select **Print** from the **File** menu. Select your printer (FAX) as the **Printer** setting, and then select **Fax Settings** or **Recipient Settings** from the pop-up menu.

Related Information

➡ "Sending a Fax from a Computer" on page 137

Software for Package Creation

Application for Creating Driver Packages (EpsonNet SetupManager)

EpsonNet SetupManager is a software to create a package for a simple printer installation, such as installing the printer driver, installing EPSON Status Monitor and creating a printer port. This software allows the administrator to create unique software packages and distribute them among groups.

For more information, visit your regional Epson website.

http://www.epson.com

Software for Making Settings or Managing Devices

Application for Configuring Printer Operations (Web Config)

Web Config is an application that runs in a web browser, such as Internet Explorer and Safari, on a computer or smart device. You can confirm the printer status or change the network service and printer settings. To use the Web Config, connect the printer and the computer or device to the same network.

The following browsers are supported.

Microsoft Edge, Internet Explorer 8 or later, Firefox*, Chrome*, Safari*

* Use the latest version.

Running Web Config on a Web Browser

1. Check the printer's IP address.

   Select the network icon on the printer's home screen, and then select the active connection method to confirm the printer's IP address.

   Note:
   You can also check the IP address by printing the network connection report.

2. Launch a Web browser from a computer or smart device, and then enter the printer's IP address.

   Format:

   IPv4: http://the printer's IP address/

   IPv6: http://[the printer's IP address]/

   Examples:

   IPv4: http://192.168.100.201/

   IPv6: http://[2001:db8::1000:1]/

   Note:
   Using the smart device, you can also run Web Config from the maintenance screen of Epson iPrint.

   Since the printer uses a self-signed certificate when accessing HTTPS, a warning is displayed on the browser when you start Web Config; this does not indicate a problem and can be safely ignored.

Related Information

➡ "Application for Printing Easily from a Smart Device (Epson iPrint)" on page 296
➡ "Printing a Network Connection Report" on page 278

Running Web Config on Windows

When connecting a computer to the printer using WSD, follow the steps below to run Web Config.

1. Open the printer list on the computer.

   ❏ Windows 10

   Click on the start button, and then select **Windows System** > **Control Panel** > **View devices and printers** in **Hardware and Sound**.

❏ Windows 8.1/Windows 8

Select **Desktop** > **Settings** > **Control Panel** > **View devices and printers** in **Hardware and Sound** (or **Hardware**).

❏ Windows 7

Click the start button, and select **Control Panel** > **View devices and printers** in **Hardware and Sound**.

❏ Windows Vista

Click the start button, and select **Control Panel** > **Printers** in **Hardware and Sound**.

2. Right-click on your printer and select **Properties**.

3. Select the **Web Service** tab and click the URL.

   Since the printer uses a self-signed certificate when accessing HTTPS, a warning is displayed on the browser when you start Web Config; this does not indicate a problem and can be safely ignored.

Running Web Config on Mac OS

1. Select **System Preferences** from the Apple menu > **Printers & Scanners** (or **Print & Scan**, **Print & Fax**), and then select the printer.

2. Click **Options & Supplies**> **Show Printer Webpage**.

   Since the printer uses a self-signed certificate when accessing HTTPS, a warning is displayed on the browser when you start Web Config; this does not indicate a problem and can be safely ignored.

Application for Setting up the Device on a Network (EpsonNet Config)

EpsonNet Config is an application that allows you to set the network interface addresses and protocols. See the operations guide for EpsonNet Config or the application's help for more details.

Starting on Windows

❏ Windows 10/Windows Server 2019/Windows Server 2016

Click the start button, and then select **EpsonNet** > **EpsonNet Config**.

❏ Windows 8.1/Windows 8/Windows Server 2012 R2/Windows Server 2012

Enter the application name in the search charm, and then select the displayed icon.

❏ Windows 7/Windows Vista/Windows XP/Windows Server 2008 R2/Windows Server 2008/Windows Server 2003 R2/Windows Server 2003

Click the start button, and select **All Programs** or **Programs** > **EpsonNet** > **EpsonNet Config SE** > **EpsonNet Config**.

Starting on Mac OS

Go > **Applications** > **Epson Software** > **EpsonNet** > **EpsonNet Config SE** > **EpsonNet Config**.

Related Information

➡ "Installing the Applications Separately" on page 156

Software for Managing Devices on the Network (Epson Device Admin)

Epson Device Admin is a multifunctional application software that manages the device on the network.

The following functions are available.

- ❏ Monitor or manage up to 2,000 printers or scanners over the segment
- ❏ Make a detailed report, such as for the consumable or product status
- ❏ Update the firmware of the product
- ❏ Introduce the device to the network
- ❏ Apply the unified settings to multiple devices.

You can download Epson Device Admin from Epson support website. For more information, see the documentation or help of Epson Device Admin.

Software for Updating

Application for Updating Software and Firmware (EPSON Software Updater)

EPSON Software Updater is an application that installs new software, and updates firmware and manuals over the Internet.

Note:
Windows Server operating systems are not supported.

Starting on Windows

- ❏ Windows 10

  Click the start button, and then select **Epson Software** > **EPSON Software Updater**.

- ❏ Windows 8.1/Windows 8

  Enter the application name in the search charm, and then select the displayed icon.

- ❏ Windows 7/Windows Vista/Windows XP

  Click the start button, and then select **All Programs** (or **Programs**) > **Epson Software** > **EPSON Software Updater**.

Note:
You can also start EPSON Software Updater by clicking the printer icon on the task bar on the desktop, and then selecting ***Software Update****.*

Starting on Mac OS

Select **Go** > **Applications** > **Epson Software** > **EPSON Software Updater**.

Related Information

➡ "Installing the Applications Separately" on page 156

Settings Menu List

Select **Settings** on the home screen of the printer to make various settings.

General Settings

Select the menus on the control panel as described below.

Settings > **General Settings**

Basic Settings

Select the menus on the control panel as described below.

Settings > **General Settings** > **Basic Settings**

You cannot change settings that have been locked by your administrator.

LCD Brightness:

Adjust the brightness of the LCD screen.

Sounds:

Adjust the volume.

- ❏ Mute

  Select **On** to mute all sound.

- ❏ Normal Mode

  Select the volume such as **Button Press**.

- ❏ Quiet Mode

  Select the volume such as **Button Press** in **Quiet Mode**.

Sleep Timer:

Adjust the time period to enter a sleep mode (energy saving mode) when the printer has not performed any operations. The LCD screen turns black when the setting time passes.

Wake from Sleep:

Wake with LCD Screen Touch:

Select **On** to return from sleep mode (energy saving mode) by tapping the touch panel. When this is off, you need to press a button on the control panel to wake the printer. Turning this feature off prevents any unintentional operations caused due to foreign objects touching the screen. You can also set a time period during this feature is on.

Power Off Timer:

Your product may have this feature or the **Power Off Settings** feature depending on the location of purchase.

Select this setting to turn the printer off automatically when it is not used for a specified period of time. You can adjust the time before power management is applied. Any increase will affect the product's energy efficiency. Please consider the environment before making any change.

Power Off Settings:

Your product may have this feature or the **Power Off Timer** feature depending on the location of purchase.

❏ Power Off If Inactive

Select this setting to turn the printer off automatically if it is not used for a specified period of time. Any increase will affect the product's energy efficiency. Please consider the environment before making any change.

❏ Power Off If Disconnected

Select this setting to turn the printer off after 30 minutes when all ports including the LINE port are disconnected. This feature may not be available depending on your region.

Date/Time Settings:

❏ Date/Time

Enter the current date and time.

❏ Daylight Saving Time

Select the summer time setting that applies to your area.

❏ Time Difference

Enter the time difference between your local time and UTC (Coordinated Universal Time).

Country/Region:

Select the country or region in which you are using your printer. If you change the country or region, your fax settings return to their defaults and you must select them again.

Language:

Select the language used on the LCD screen.

Start-up Screen:

Specify the initial menu displayed on the LCD screen when the printer turns on and **Operation Time Out** is enable.

Edit Home:

Change the layout of the icons on the LCD screen. You can also add, remove, and move icons.

Wall Paper:

Change the background color of the LCD screen.

Operation Time Out:

Select **On** to return to the initial screen when no operations have been performed for the specified time. When user restrictions have been applied and no operations are performed for the specified time, you are logged out and returned to the initial screen.

Keyboard:

Change the layout of the keyboard on the LCD screen.

Default Screen(Job/Status)

Select the default information you want to display when you tap **Job/Status**.

Related Information

➡ "Saving Power" on page 155
➡ "Entering Characters" on page 27

Printer Settings

Select the menus on the control panel as described below.

Settings > **General Settings** > **Printer Settings**

You cannot change settings that have been locked by your administrator.

Paper Source Settings:

Paper Setting:

Select the paper source to specify the paper size and paper type you loaded. When **Paper Size Auto Detect** is enabled, the printer detects the paper size you loaded.

Paper Tray Priority:

Select **On** to give printing priority to paper loaded in the rear paper feed.

A4/Letter Auto Switching:

Select **On** to feed paper from the paper source set as A4 size when there is no paper source set as Letter, or feed from the paper source set as Letter size when there is no paper source set as A4.

Auto Select Settings:

When paper runs out, paper is automatically fed from a paper source that has the same settings as the paper settings for the print jobs. You can set automatic selection for every paper source for each function in copy, fax, or other. You cannot set everything to off.

This setting is disabled when you select a specific paper source in the paper settings for the print jobs. Depending on the paper type setting on the **Main** tab of the printer driver, paper may not be fed automatically.

Error Notice:

Select **On** to display an error message when the selected paper size or type does not match the loaded paper.

Paper Setup Auto Display:

Select **On** to display the **Paper Setting** screen when loading paper in the paper cassette. If you disable this feature, you cannot print from an iPhone, iPad, or iPod touch using AirPrint.

Universal Print Settings:

These print settings are applied when you print by an external device without using the printer driver. The offset settings are applied when you print using the printer driver.

Top Offset:

Adjust the top margin of the paper.

Left Offset:

Adjust the left margin of the paper.

Top Offset in Back:

Adjust the top margin for the back of the page when performing 2-sided printing.

Left Offset in Back:

Adjust the left margin for the back of the page when performing 2-sided printing.

Check Paper Width:

Select **On** to check the paper width before printing. This prevents printing beyond the edges of the paper when the paper size setting is incorrect, but this may lower the print speed.

Skip Blank Page:

Skips blank pages in the print data automatically.

Auto Error Solver:

Select an action to perform when a 2-sided printing error or a memory full error occurs.

❏ On

Displays a warning and prints in single-sided mode when a 2-sided printing error occurs, or prints only what the printer could process when a memory full error occurs.

❏ Off

Displays an error message and cancels printing.

Memory Device Interface:

❏ Memory Device:

Select **Enable** to allow the printer to access an inserted memory device. If **Disable** is selected, you cannot save data to the memory device with the printer. This prevents confidential documents from being removed illegally.

❏ File Sharing:

Select whether to give write access to the memory device from a USB-connected computer or a network-connected computer.

Thick Paper:

Select **On** to prevent ink from smearing on your printouts, however, this may lower the print speed.

Quiet Mode:

Select **On** to reduce noise during printing, however, this may lower the print speed. Depending on the paper type and print quality settings you selected, there may be no difference in the printer's noise level.

Ink Drying Time:

Select the ink drying time you want to use when performing 2-sided printing. The printer prints the other side after printing one side. If your printout is smeared, increase the time setting.

Bidirectional:

Select **On** to change the print direction; Prints while the print head moves to the left and to the right. If vertical or horizontal ruled lines on your printout look blurred or misaligned, disabling this feature may solve the problem; however, doing so may reduce print speed.

Output Tray Auto Extension:

Select **On** to automatically extend the output paper support when printing on paper larger than A4 size.

PC Connection via USB:

Select **Enable** to allow a computer to access the printer when connected by USB. When **Disable** is selected, printing and scanning that is not sent over a network connection is restricted.

Related Information

➡ "Loading Paper" on page 31

Network Settings

Select the menus on the control panel as described below.

Settings > **General Settings** > **Network Settings**

Wi-Fi Setup:

Set up or change wireless network settings. Choose the connection method from following and then follow the instructions on the control panel.

Router:

- ❏ Wi-Fi Setup Wizard
- ❏ Push Button Setup(WPS)
- ❏ Others
  - ❏ PIN Code Setup(WPS)
  - ❏ Wi-Fi Auto Connect
  - ❏ Disable Wi-Fi

    You may be able to resolve network problems by disabling the Wi-Fi settings or making the Wi-Fi settings again. Tap > **Router** > **Change Settings** > **Others** > **Disable Wi-Fi** > **Start Setup**.

Wi-Fi Direct:

- ❏ iOS
- ❏ Android
- ❏ Other OS Devices

- ❏ Change
  - ❏ Change Network Name
  - ❏ Change Password
  - ❏ Disable Wi-Fi Direct
  - ❏ Restore Default Settings

Wired LAN Setup:

Set up or change a network connection that uses a LAN cable and router. When this is being used, Wi-Fi connections are disabled.

Network Status:

Displays or prints the current network settings.

- ❏ Wired LAN/Wi-Fi Status
- ❏ Wi-Fi Direct Status
- ❏ Email Server Status
- ❏ Print Status Sheet

Connection Check:

Checks the current network connection and prints a report. If there are any problems with the connection, see the report to solve the problem.

Advanced:

Make the following detailed settings.

- ❏ Device Name
- ❏ TCP/IP
- ❏ Proxy Server
- ❏ Email Server
- ❏ IPv6 Address
- ❏ MS Network Sharing
- ❏ Link Speed & Duplex
- ❏ Redirect HTTP to HTTPS
- ❏ Disable IPsec/IP Filtering
- ❏ Disable IEEE802.1X

Related Information

➡ "Making Wi-Fi Settings by Entering the SSID and Password" on page 264
➡ "Making Wi-Fi Settings by Push Button Setup (WPS)" on page 265
➡ "Making Wi-Fi Settings by PIN Code Setup (WPS)" on page 266
➡ "Connecting a Smart Device and Printer Directly (Wi-Fi Direct)" on page 266
➡ "Printing a Network Connection Report" on page 278
➡ "Checking the Network Connection Status" on page 277

Web Service Settings

Select the menus on the control panel as described below.

Settings > **General Settings** > **Web Service Settings**

You cannot change settings that have been locked by your administrator.

Epson Connect Services:

Displays whether the printer is registered and connected to Epson Connect.

You can register to the service by selecting **Register** and follow the instructions.

When you have registered, you can change the following settings.

❏ Suspend/Resume

❏ Unregister

For details, see the following web site.

https://www.epsonconnect.com/

http://www.epsonconnect.eu (Europe only)

Related Information

➡ "Printing Using a Cloud Service" on page 79

Fax Settings

Select the menus on the control panel as described below.

Settings > **General Settings** > **Fax Settings**

Note:

❏ *You can also access Fax Settings from Web Config. Click the **Fax** tab on the Web Config screen.*

❏ *When you use Web Config to display the **Fax Settings** menu, there may be slight differences in the user interface and in location compared to the printer's control panel.*

Related Information

➡ "Quick Operation Button" on page 308
➡ "Basic Settings" on page 309
➡ "Send Settings" on page 311
➡ "Receive Settings" on page 312
➡ "Report Settings" on page 317
➡ "Security Settings" on page 318
➡ "Check Fax Connection" on page 319
➡ "Fax Setting Wizard" on page 319

Quick Operation Button

You can find the menu on the printer's control panel below.

Settings > **General Settings** > **Fax Settings** > **Quick Operation Button**

Note:
- *If a password entry screen is displayed, enter the administrator password.*
- *You cannot display this menu on the Web Config screen.*

Quick Operation Button 1, Quick Operation Button 2, Quick Operation Button 3:

Registers up to three shortcuts allowing you to quickly access the menu you use often when sending faxes. The shortcuts are displayed on the following menu.

Fax > **Fax Settings** tab.

Basic Settings

You can find the menu on the printer's control panel below.

Settings > **General Settings** > **Fax Settings** > **Basic Settings**

Note:
- *On the Web Config screen, you can find the menu below.*

  Fax** tab > **Basic Settings
- *If a password entry screen is displayed, enter the password.*

Fax Speed:

Select the fax transmission speed. We recommend selecting **Slow(9,600bps)** when a communication error occurs frequently, when sending/receiving a fax to/from abroad, or when you are using an IP (VoIP) phone service.

ECM:

Automatically corrects errors in the fax transmission (Error Correction Mode), mostly caused by telephone line noise. If this is disabled, you cannot send or receive documents in color.

Dial Tone Detection:

Detects a dial tone before starting to dial. If the printer is connected to a PBX (Private Branch Exchange) or digital phone line, the printer may fail to start dialing. In this situation, change the **Line Type** setting to **PBX**. If this does not work, disable this feature. However, disabling this feature may drop the first digit of a fax number and send the fax to the wrong number.

Dial Mode:

Select the type of phone system to which you have connected the printer. When set to **Pulse**, you can temporarily switch the dialing mode from pulse to tone by pressing * ("T" is entered) while entering numbers on the fax top screen. This setting may not be displayed depending on your region or country.

Line Type:

Select the line type to which you have connected the printer.

When using the printer in an environment that uses extensions and requires an external access code, such as 0 and 9, to get an outside line, select **PBX**. For an environment that uses a DSL modem or terminal adapter, setting to **PBX** is also recommended.

Access Code

Select **Use**, and then register an external access code such as 0 or 9. Then, when sending a fax to an outside fax number, enter # (hash) instead of the real code. # (hash) must also be used in **Contacts** as an external access code. If an external access code such as 0 or 9 is set in a contact, you cannot send faxes to the contact. In this case, set **Access Code** to **Do Not Use**, otherwise you must change the code in **Contacts** to #.

Header:

Enter your sender name and fax number. These appear as a header on outgoing faxes.

- ❏ Your Phone Number: You can enter up to 20 characters using 0-9 + or space. For Web Config, you can enter up to 30 characters.
- ❏ Fax Header: You can register up to 21 sender names as necessary. You can enter up to 40 characters for each sender name. For Web Config, enter the header in Unicode (UTF-8).

Receive Mode:

Select the receive mode. For details, see the related Information below.

DRD:

If you have subscribed to a distinctive ring service from your telephone company, select the ring pattern to be used for incoming faxes. The distinctive ring service, offered by many telephone companies (the service name differs by company), allows you to have several phone numbers on one phone line. Each number is assigned different ring pattern. You can use one number for voice calls and another for fax calls. Depending on the region, this option may be **On** or **Off**.

Rings to Answer:

Select the number of rings that must occur before the printer automatically receives a fax.

Remote Receive:

Remote Receive

When you answer an incoming fax call on a phone connected to the printer, you can start receiving the fax by entering the code using the phone.

Start Code

Set the start code of **Remote Receive**. Enter two characters using 0-9, *, #.

Rejection Fax:

Rejection Fax

Select options to reject receiving junk faxes.

- ❏ Rejection Number List: If the other party's phone number is in the rejection number list, set whether to reject the incoming faxes.
- ❏ Fax Header Blank: If the other party's phone number is blocked, set whether to reject receiving the faxes.
- ❏ Unregistered Contacts: If the other party's phone number is not in the contacts, set whether to reject receiving the faxes.

Edit Blocked Number list

You can register up to 30 fax numbers to reject the faxes and calls. Enter up to 20 characters using 0-9, *, #, or space.

Related Information

➡ "Enabling Sending Faxes from a Computer" on page 399
➡ "Making the Printer Ready to Send and Receive Faxes" on page 388
➡ "Making Settings for a PBX Phone System" on page 390
➡ "Receiving Incoming Faxes" on page 119
➡ "Making Settings for Blocking Junk Faxes" on page 399

Send Settings

You can find the menu on the printer's control panel below.

Settings > **General Settings** > **Fax Settings** > **Send Settings**

Note:

❏ *On the Web Config screen, you can find the menu below.*

Fax** tab* > ***Send Settings

❏ *If a password entry screen is displayed, enter the password.*

Batch Send:

When there are multiple faxes waiting to be sent to the same recipient, this groups them together to send them at once. Up to five documents (up to 100 pages in total) can be sent at one time. This helps you save on transmission costs by reducing the number of connection times.

Save Failure Data:

Saves documents that failed to be sent in the printer's memory. You can resend the documents from the **Job/Status**.

Wait Time for Next Original:

Set the time to wait for the next original. The printer starts sending the fax after the time has passed.

Fax Preview Display Time:

You can preview the scanned document for a set time before sending it. The printer stars sending the fax after the time has passed.

PC to FAX Function:

This item is displayed on the Web Config screen only. Enables sending faxes using a client computer.

Related Information

➡ "Running Web Config on a Web Browser" on page 299

Receive Settings

Related Information

➡ "Save/Forward Settings" on page 312
➡ "Print Settings" on page 316

Save/Forward Settings

Unconditional Save/Forward:

You can find the menu on the printer's control panel below.

Settings > **General Settings** > **Fax Settings** > **Receive Settings** > **Save/Forward Settings** > **Unconditional Save/Forward**

Note:
On the Web Config screen, you can find the menu below.

Fax** tab* > ***Save/Forward Settings > ***Unconditional Save/Forward***

You can set saving and forwarding destinations to the Inbox, a computer, an external memory device, email addresses, shared folders, and other fax machines. You can use these features at the same time. If you disable all items in Unconditional Save/Forward, the printer is set to print received faxes.

Save to Inbox:

Saves received faxes to the printer's Inbox. Up to 100 documents can be saved. Note that saving 100 documents may not be possible depending on the usage conditions such as the file size of saved documents, and using of multiple fax saving features at a time.

Though the received faxes are not automatically printed, you can view them on the printer's screen and print only the ones you need. However, if you select **Yes and Print** in another item, such as **Save to Computer** in **Unconditional Save/Forward**, the received faxes are printed automatically.

Save to Computer:

Saves received faxes as PDF files on a computer connected to the printer. You can only set this to **Yes** by using the FAX Utility (application). You cannot enable this from printer's control panel. Install the FAX Utility on the computer in advance. After setting this to **Yes**, you can change this to **Yes and Print** from the printer's control panel.

Save to Memory Device:

Saves received faxes as PDF files to an external memory device connected to the printer. Selecting **Yes and Print** prints received faxes while saving them to the memory device.

Received documents are saved in the printer's memory temporarily before the documents are saved in the memory device connected to the printer. Because a memory full error disables sending and receiving faxes, keep the memory device connected to the printer.

Forward:

Forwards received faxes to another fax machine, or forwards them as PDF files to a shared folder on a network or to an email address. Forwarded faxes are deleted from the printer. Selecting **Yes and Print** prints received faxes while forwarding them. First add the forwarding destinations to the contacts list. To forward to an email address, configure the email server settings.

❏ Destination: You can select forwarding destinations from the contacts list you added in advance.

If you have selected a shared folder on a network or an email address as the forwarding destination, we recommend that you test if you can send a scanned image to the destination in the scan mode. Select **Scan** > **Email**, or **Scan** > **Network Folder/FTP** from the home screen, select the destination, and then start scanning.

❏ Options When Forwarding Failed: You can select whether to print the failed fax or save it to the Inbox.

When the Inbox is full, receiving faxes is disabled. You should delete the documents from the inbox once they have been checked. The number of documents that have failed to be forwarded is displayed on the on the home screen, in addition to other unprocessed jobs.

Email Notifications:

Sends an email notification when the process you select below is complete. You can use the features below at the same time.

Recipient

Set the destination of the process completion notification.

Notify on Receive

Sends a notification when receiving a fax is complete.

Notify on Print

Sends a notification when printing a fax is complete.

Notify on Save

Sends a notification when saving a fax to a memory device is complete.

Notify on Forward

Sends a notification when forwarding a fax is complete.

Related Information

➡ "Making Saving Settings to Receive Faxes" on page 392
➡ "Making Forwarding Settings to Receive Faxes" on page 393

Conditional Save/Forward:

You can find the menu on the printer's control panel below.

Settings > **General Settings** > **Fax Settings** > **Receive Settings** > **Save/Forward Settings** > **Conditional Save/Forward**

Note:
On the Web Config screen, you can find the menu below.

Fax** tab* > ***Save/Forward Settings > ***Conditional Save/Forward***

You can set saving and/or forwarding destinations to the Inbox, confidential boxes, an external memory device, email addresses, shared folders, and another fax machine.

To switch between enabling or disabling the conditions, tap anywhere on the set item except for .

Name:

Enter name of the condition.

Condition(s):

Select the conditions and make the settings.

Sender Fax Number match

When the sender fax number matches, the received fax is saved and forwarded.

Subaddress(SUB) perfect match

When the subaddress (SUB) matches perfectly, the received fax is saved and forwarded.

Password(SID) perfect match

When the password (SID) matches perfectly, the received fax is saved and forwarded.

Receiving Time

Saves and forwards a fax received during the specified period of time.

Save/Forward Destination:

Select the destination to save and forward received documents that match the conditions. You can use the features below at the same time.

Save to Fax Box:

Saves received faxes in the printer's Inbox or confidential box.

You can save up to 100 documents in total. Note that saving 100 documents may not be possible depending on the usage conditions such as the file size of saved documents, and using of multiple fax saving features at a time.

Save to Memory Device:

Saves received faxes as PDF files to an external memory device connected to the printer.

Received documents are saved in the printer's memory temporarily before the documents are saved in the memory device connected to the printer. Because a memory full error disables sending and receiving faxes, keep the memory device connected to the printer.

Forward:

Forwards received faxes to another fax machine, or forwards them as PDF files to a shared folder on a network or to an email address. Forwarded faxes are deleted from the printer. First add the forwarding destination to the contacts list. To forward to an email address, you also need to configure the email server settings.

- Destination: You can select a forwarding destination from the contacts list you added in advance.

  If you have selected a shared folder on a network or an email address as the forwarding destination, we recommend that you test if you can send a scanned image to the destination in the scan mode. Select **Scan** > **Email**, or **Scan** > **Network Folder/FTP** from the home screen, select the destination, and then start scanning.

- Options When Forwarding Failed: You can select whether to print the failed fax or save it to the Inbox.

Print:

Prints received faxes.

Email Notifications:

Sends an email notification when the process you select below is complete. You can use the features below at the same time.

Recipient

Set the destination of the process completion notification.

Notify on Receive

Sends a notification when receiving a fax is complete.

Notify on Print

Sends a notification when printing a fax is complete.

Notify on Save

Sends a notification when saving a fax to a memory device is complete.

Notify on Forward

Sends a notification when forwarding a fax is complete.

Transmission Report:

Prints a transmission report automatically after you save or forward a received fax.

Selecting **Print on Error** prints a report only when you save or forward a received fax and an error occurs.

Related Information

➡ "Making Saving Settings to Receive Faxes with Specific Conditions" on page 395
➡ "Making Forwarding Settings to Receive Faxes with Specified Conditions" on page 397

Common Settings:

You can find the menu on the printer's control panel below.

Settings > **General Settings** > **Fax Settings** > **Receive Settings** > **Save/Forward Settings** > **Common Settings**

Note:
On the Web Config screen, you can find the menu below.

❏ ***Fax*** *tab* > ***Fax Box*** > ***Inbox***

❏ ***Fax*** *tab* > ***Save/Forward Settings*** > ***Common Settings***

Inbox settings:

Options when memory is full:

You can select the operation to print the received fax or refuse to receive it when the Inbox memory is full.

Inbox Password Settings:

Password protects the Inbox to restrict users from viewing received faxes. Select **Change** to change the password, and select **Reset** to cancel password protection. When changing or resetting the password, you need the current password.

You cannot set a password when **Options when memory is full** has been set to **Receive and print faxes**.

Email Subject to Forward:

You can specify a subject for the email when forwarding to an email address.

Menu:

You can find Menu on the printer's control panel by accessing the following menus in order.

Settings > **General Settings** > **Fax Settings** > **Receive Settings** > **Save/Forward Settings** > Menu

Note:
You cannot print the list from the Web Config screen.

Print Conditional Save/Forward list:

Prints the Conditional Save/Forward list.

Print Settings

You can find the menu on the printer's control panel below.

Settings > **General Settings** > **Fax Settings** > **Receive Settings** > **Print Settings**

Note:
- *On the Web Config screen, you can find the menu below.*

  Fax** tab* > ***Print Settings
- *If a password entry screen is displayed, enter the password.*

Auto Reduction:

Prints received faxes with large-size documents reduced to fit on the paper in the paper source. Reducing may not always be possible depending on the received data. If this is turned off, large documents are printed at their original size on multiple sheets, or a blank second page may be ejected.

Split Page Settings:

Prints received faxes with the page split when the size of the received documents is larger than the size of the paper loaded in the printer.

Auto Rotation:

Rotates faxes received as landscape-oriented A5 size documents so that they are printed on A5 size paper. This setting is applied when the paper size setting for at least one paper source used for printing faxes is set to A5.

By selecting **Off**, faxes received as landscape-oriented A5 size, which are the same width as A4 portrait documents, are assumed to be A4 size faxes and printed as such.

Check the paper source settings for printing faxes and paper size for the paper sources in the following menus in **Settings** > **General Settings** > **Printer Settings** > **Paper Source Settings**.

- ❏ **Auto Select Settings**
- ❏ **Paper Setting** > **Paper Size**

Add Reception Information:

Prints reception information on the received fax, even if the sender does not set the header information. The reception information includes the received date and time, sender's ID, reception ID (such as " #001"), and page number (such as "P1"). By collating the reception ID printed on the received fax, you can check the transmission log in the fax report and the fax job history. When **Split Page Settings** is enabled, the split page number is also included.

2-Sided:

Prints multiple pages of received faxes on both sides of the paper.

Print Start Timing:

Select options to start printing the faxes to receive.

- ❏ All Pages Received: Printing starts after receiving all of the pages. To start printing from the first page or last page depends on the setting of **Collation Stack** feature. See the explanation for **Collation Stack**.
- ❏ First Page Received: Starts printing when the first page is received, and then prints in order as the pages are received. If the printer cannot start printing, such as when it is printing other jobs, the printer starts printing received pages as a batch when it is available.

Collation Stack:

Since the first page is printed last (output to the top), the printed documents are stacked in the correct page order. When the printer is running low on memory, this feature may not be available.

Print Suspend Time:

Print Suspend Time

During the specified time period, the printer saves documents received in the printer's memory without printing them. This feature can be used for noise prevention at night or to prevent confidential documents from being disclosed while you are away. Before using this feature, make sure there is enough free memory. Even before the restarting time, you can check and print the received documents individually from **Job/Status** on the home screen.

Time to Stop

Stops printing documents.

Time to Restart

Restarts printing documents automatically.

Quiet Mode:

Reduces the noise the printer makes when printing faxes, however, print speed may be reduced.

Report Settings

You can find the menu on the printer's control panel below.

Settings > **General Settings** > **Fax Settings** > **Report Settings**

Note:

❏ *On the Web Config screen, you can find the menu below.*

Fax** tab* > ***Report Settings

❏ *If a password entry screen is displayed, enter the password.*

Forwarding Report:

Prints a report after forwarding a received fax document. Select **Print** to print every time a document is forwarded.

Backup Error Report:

Prints a report when a backup error occurs on forwarding the sent fax to **Backup Destination**. You can set the destination in **Fax** > **Fax Settings** > **Backup**. Note that the backup feature is available when:

❏ Sending a fax in monochrome

❏ Sending a fax using the **Send Fax Later** feature

❏ Sending a fax using the **Batch Send** feature

❏ Sending a fax using the **Store Fax Data** feature

Fax Log Auto Print:

Prints the fax log automatically. Select **On(Every 30)** to print a log every time 30 fax jobs are completed. Select **On(Time)** to print the log at a specified time. However, if the number of fax jobs exceeds 30, the log is printed before the specified time.

Attach Fax image to report:

Prints a **Transmission Report** with an image of the first page of the sent document. Select **On(Large Image)** to print the upper part of the page without reducing. Select **On(Small Image)** to print the entire page reducing it to fit onto the report.

Report Format:

Selects a format for fax reports in **Fax** > **More** tab > **Fax Report** other than **Protocol Trace**. Select **Detail** to print with error codes.

Output Method:

Select an output method for fax reports, such as **Save to Memory Device**. When you select **Forward**, select **Destination** from the contacts.

Security Settings

You can find the menu on the printer's control panel below.

Settings > **General Settings** > **Fax Settings** > **Security Settings**

Note:

❏ *On the Web Config screen, you can find the menu below.*

Fax** tab* > ***Security Settings

❏ *If a password entry screen is displayed, enter the password.*

Direct Dialing Restrictions:

Selecting **On** disables manual entry of the recipient's fax numbers allowing the operator to select recipients only from the contacts list or sent history.

Selecting **Enter Twice** requires the operator to enter the fax number again when the number was manually entered.

Selecting **Off** enables manual entry of the recipient's fax numbers.

Broadcasting Restrictions:

Selecting **On** allows only one fax number to be entered as the Recipient.

Confirm Address List:

Selecting **On** displays a recipient confirmation screen before starting the transmission.

You can select the recipients from **All** or **Only for Broadcasting**.

Backup Data Auto Clear:

Selecting **On** automatically erases the backups when sending or receiving a document completes successfully and the backups become unnecessary.

Selecting **Off**, to prepare for an unexpected power off due to an electricity failure or an incorrect operation, temporarily stores backup copies of sent and received documents in its memory.

Clear Backup Data:

Erases all backup copies temporarily stored in the printer's memory. Run this before you give the printer to someone else or dispose of it.

This menu is not displayed on the Web Config screen.

Check Fax Connection

You can find the menu on the printer's control panel below.

Settings > **General Settings** > **Fax Settings** > **Check Fax Connection**

Note:
You cannot display this menu on the Web Config screen.

Selecting **Check Fax Connection** checks that the printer is connected to the phone line and ready for fax transmission. You can print the check result on A4 size plain paper.

Fax Setting Wizard

You can find the menu on the printer's control panel below:

Settings > **General Settings** > **Fax Settings** > **Fax Setting Wizard**

Note:
You cannot display this menu on the Web Config screen.

Selecting **Fax Setting Wizard** makes basic fax settings. Follow the on-screen instructions.

Related Information

➡ "Basic Settings" on page 309
➡ "Making the Printer Ready to Send and Receive Faxes" on page 388

Scan Settings

Confirm Recipient

Check destination before scanning.

Email Server

Set the email server settings for scanning **Email**.

❏ Server Settings

Specify the authentication method for the printer to access the mail server.

"Mail Server Setting Items" on page 353

❏ Connection Check

Check the connection to the mail server.

System Administration

By using this menu, you can maintain the product as a system administrator. It also allows you to restrict product features for individual users to suite your work or office style.

Select the menus on the control panel as described below.

Settings > **General Settings** > **System Administration**

Contacts Manager:

You can make the following settings for contacts.

Register/Delete:

Register and/or delete contacts for the Fax, Scan to Email, and Scan to Network Folder/FTP menus.

Frequent:

Register frequently used contacts to access them quickly. You can also change the order of the list.

Print Contacts:

Print your contact list.

View Options:

Change the way the contact list is displayed.

Search Options:

Change the method for searching contacts.

Clear Internal Memory Data:

Delete the printer's internal memory data, such as jobs with passwords.

Security Settings:

You can make the following security settings.

Restrictions:

Permit to change the settings of the following items when panel lock is enabled.

- ❏ Job Log Access
- ❏ Access to Register/Delete Contacts
- ❏ Fax Recent Access
- ❏ Fax Transmission Log Access
- ❏ Access to Fax Report
- ❏ Access to Print Save History of Scan to Network Folder/FTP
- ❏ Access to Recent of Scan to Email
- ❏ Access to Show Sent History of Scan to Email
- ❏ Access to Print Sent History of Scan to Email
- ❏ Access to Language
- ❏ Access to Thick Paper
- ❏ Access to Quiet Mode
- ❏ Protection of Personal Data

Access Control:

Select **On** to restrict product features. This requires users to log into the product control panel with their user name and password before they can use control panel features. In **Accept Unknown User Jobs**, you can select whether or not to allow jobs that do not have the necessary authentication information.

Admin Settings:

- ❏ Admin Password

  Set, change, and clear an administrator password.

- ❏ Lock Setting

  Select whether or not to lock the control panel using the password registered in **Admin Password**.

Password Encryption:

Select **On** to encrypt your password. If you turn the power off while restart is in progress, data may be damaged and the printer settings are restores to defaults. In that case, set password information again.

Customer Research:

Select **Approve** to provide product usage information such as the number of prints to Seiko Epson Corporation.

Restore Default Settings:

Reset the settings in the following menus to their defaults.

- ❏ Network Settings
- ❏ Copy Settings
- ❏ Scan Settings
- ❏ Fax Settings
- ❏ Clear All Data and Settings

Firmware Update:

You can get firmware information such as your current version and information on available updates.

Update:

Check if the latest version of the firmware has been uploaded to the network server. If an update is available, you can select whether or not to start updating.

Notification:

Select **On** to receive a notification if a firmware update is available.

Print Counter

Select the menus on the control panel as described below.

Settings > **Print Counter**

Displays the total number of prints, B&W prints, and color prints including items such as the status sheet from the time you purchased the printer.

Supply Status

Select the menus on the control panel as described below.

Settings > **Supply Status**

Displays the approximate service life of the maintenance box. When is displayed, the maintenance box is nearly full. When is displayed, the maintenance box is full.

Related Information

➡ "Refilling the Ink Tanks" on page 229

Maintenance

Select the menus on the control panel as described below.

Settings > **Maintenance**

Print Quality Adjustment:

Select this feature if there are any problems with your print outs. You can check for clogged nozzles and clean the print head if necessary, and then adjust some parameters to improve print quality.

Print Head Nozzle Check:

Select this feature to check if the print head nozzles are clogged. The printer prints a nozzle check pattern.

Print Head Cleaning:

Select this feature to clean clogged nozzles in the print head.

Power Cleaning:

Select this feature to replace all of the ink inside the ink tubes. More ink is consumed than in usual cleaning. See the "Related Information" below for details on using this feature.

Print Head Alignment:

Select this feature to adjust the print head to improve print quality.

- ❏ Ruled Line Alignment

  Select this feature to align vertical lines.

- ❏ Horizontal Alignment

  Select this feature if horizontal banding appears at regular intervals in your printouts.

Fill Ink:

Select this feature to reset the ink level to 100% when filling the ink tank.

Reset Ink Level:

Select this feature to set the ink level according to the actual ink remaining.

Paper Guide Cleaning:

Select this feature if there are ink stains on the internal rollers. The printer feeds paper to clean the internal rollers.

Remove Paper:

Select this feature if there are still some torn pieces of paper inside the printer even after removing jammed paper. The printer makes more space between the print head and the surface of the paper to easily remove the torn pieces of paper.

Periodic Cleaning:

The printer automatically performs **Print Head Nozzle Check** and **Print Head Cleaning** based on the specific period of time. Select **On** to maintain premium print quality. Under the following conditions, perform **Print Head Nozzle Check** and **Print Head Cleaning** yourself.

- ❏ Printout problems
- ❏ When **Off** is selected for **Periodic Cleaning**
- ❏ When printing at high quality, such as photos
- ❏ When the **Print Head Cleaning** message is displayed on the LCD screen

Related Information

➡ "Checking and Cleaning the Print Head" on page 146
➡ "Running Power Cleaning (Mac OS)" on page 149
➡ "Refilling the Ink Tanks" on page 229
➡ "Cleaning the Paper Path for Ink Smears" on page 150

Language

Select the menus on the control panel as described below.

Settings > **Language**

Select the language used on the LCD screen.

Printer Status/Print

Select the menus on the control panel as described below.

Settings > **Printer Status/Print**

Print Status Sheet:

Configuration Status Sheet:

Print information sheets showing the current printer status and settings.

Supply Status Sheet:

Print information sheets showing the status of consumables.

Usage History Sheet:

Print information sheets showing the usage history of the printer.

Network:

Displays the current network settings. You can also print the status sheet.

Contacts Manager

Select the menus on the control panel as described below.

Settings > **Contacts Manager**

Register/Delete:

Register and/or delete contacts for the Fax, Scan to Email, and Scan to Network Folder/FTP menus.

Frequent:

Register frequently used contacts to access them quickly. You can also change the order of the list.

Print Contacts:

Print your contact list.

View Options:

Change the way the contact list is displayed.

Search Options:

Change the method for searching contacts.

User Settings

Select the menus on the control panel as described below.

Settings > **User Settings**

You can change the default settings for your frequently used scanning, copying, and faxing settings. See the following related information for details.

- ❏ Scan to Network Folder/FTP
- ❏ Scan to Email
- ❏ Scan to Computer
- ❏ Scan to Memory Device
- ❏ Scan to Cloud
- ❏ Copy Settings
- ❏ Fax

Product Specifications

Printer Specifications

Print Head Nozzle Placement		Black ink nozzles: 800 Color ink nozzles: 256 for each color
Weight of Paper *	Plain Paper	64 to 90 g/m^2(17 to 24lb)
	Thick Paper	91 to 256 g/m^2 (25 to 68 lb)
	Envelopes	Envelope #10, DL, C6, C4: 75 to 100 g/m^2 (20 to 27 lb)

* Even when the paper thickness is within this range, the paper may not feed in the printer or print result may adversely affected depending on the paper property or quality.

Printable Area

Printable Area for Single Sheets

Print quality may decline in the shaded areas due to the printer's mechanism.

Printing with borders

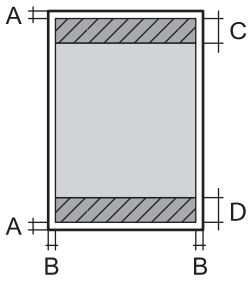

A	3.0 mm (0.12 in.)
B	3.0 mm (0.12 in.)
C	48.0 mm (1.89 in.)
D	49.0 mm (1.93 in.)

Borderless printing

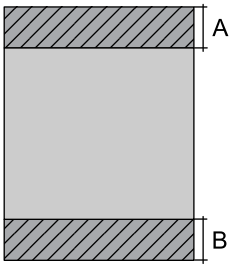

A	51.0 mm (2.01 in.)
B	52.0 mm (2.05 in.)

Printable Area for Envelopes

Print quality may decline in the shaded areas due to the printer's mechanism.

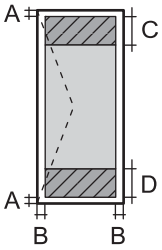

A	3.0 mm (0.12 in.)
B	3.0 mm (0.12 in.)
C	48.0 mm (1.89 in.)
D	49.0 mm (1.93 in.)

Scanner Specifications

Scanner Type	Flatbed
Photoelectric Device	CIS
Effective Pixels	10200×14040 pixels (1200 dpi)
Maximum Document Size	216×297 mm (8.5×11.7 in.) A4, Letter

Scanning Resolution	1200 dpi (main scan) 2400 dpi (sub scan)
Output Resolution	50 to 9600 dpi in 1 dpi increments
Color Depth	Color ❏ 48 bits per pixel internal (16 bits per pixel per color internal) ❏ 24 bits per pixel external (8 bits per pixel per color external) Grayscale ❏ 16 bits per pixel internal ❏ 8 bits per pixel external Black and white ❏ 16 bits per pixel internal ❏ 1 bits per pixel external
Light Source	LED

ADF Specifications

ADF Type	Auto duplex scanning
Available Paper Sizes	A5, A4, B5, Executive, 16K, Indian-Legal, Letter, 8.5×13 in, Legal
Paper Type	Plain Paper
Weight of Paper	64 to 95 g/m^2
Loading Capacity	A5, A4, B5, Executive, 16K, Letter: 50 sheets or 5.5 mm Indian-Legal, 8.5×13 in, Legal: 10 sheets

Even when the original meets the specifications for media that can be placed in the ADF, it may not feed from the ADF or the scan quality may decline depending on the paper properties or quality.

Fax Specifications

Fax Type	Walk-up black-and-white and color fax capability (ITU-T Super Group 3)
Supported Lines	Standard analogue telephone lines, PBX (Private Branch Exchange) telephone systems
Speed	Up to 33.6 kbps

Resolution	Monochrome ❏ Standard: 8 pel/mm×3.85 line/mm (203 pel/in.×98 line/in.) ❏ Fine: 8 pel/mm×7.7 line/mm (203 pel/in.×196 line/in.) ❏ Super Fine: 8 pel/mm×15.4 line/mm (203 pel/in.×392 line/in.) ❏ Ultra Fine: 16 pel/mm×15.4 line/mm (406 pel/in.×392 line/in.) Color 200×200 dpi
Page Memory	Up to 550 pages (when received ITU-T No.1 chart in monochrome draft mode)
Redial*	2 times (with 1 minute intervals)
Interface	RJ-11 Phone Line, RJ-11 Telephone set connection

* The specifications may differ by country or region.

Using Port for the Printer

The printer uses the following port. These ports should be allowed to become available by the network administrator as necessary.

Sender (Client)	Use	Destination (Server)	Protocol	Port Number
Printer	File sending (When scan to network folder is used from the printer)	FTP server	FTP (TCP)	20
				21
		File server	SMB (TCP)	445
			NetBIOS (UDP)	137
				138
			NetBIOS (TCP)	139
	Email sending (When scan to mail is used from the printer)	SMTP server	SMTP (TCP)	25
			SMTP SSL/TLS (TCP)	465
			SMTP STARTTLS (TCP)	587
	POP before SMTP connection (When scan to mail is used from the printer)	POP server	POP3 (TCP)	110
	When Epson Connect is used	Epson Connect Server	HTTPS	443
			XMPP	5222
	Collecting user information (Use the contacts from the printer)	LDAP server	LDAP (TCP)	389
			LDAP SSL/TLS (TCP)	636
			LDAP STARTTLS (TCP)	389
	User authentication when collecting user information (When using the contacts from the printer) User authentication when using the scan to network folder (SMB) from the printer	KDC server	Kerberos	88
	Control WSD	Client computer	WSD (TCP)	5357
	Search the computer when push scanning from Epson ScanSmart	Client computer	Network Push Scan Discovery	2968

Sender (Client)	Use	Destination (Server)	Protocol	Port Number
Client computer	Discover the printer from an application such as EpsonNet Config, printer driver, and scanner driver.	Printer	ENPC (UDP)	3289
	Collect and set up the MIB information from an application such as EpsonNet Config, printer driver, and scanner driver.	Printer	SNMP (UDP)	161
	Forwarding LPR data	Printer	LPR (TCP)	515
	Forwarding RAW data	Printer	RAW (Port9100) (TCP)	9100
	Forwarding AirPrint (IPP/IPPS printing) data	Printer	IPP/IPPS (TCP)	631
	Searching WSD printer	Printer	WS-Discovery (UDP)	3702
	Forwarding the scan data from Epson ScanSmart	Printer	Network Scan (TCP)	1865
	Collecting the job information when push scanning from Epson ScanSmart	Printer	Network Push Scan	2968

Interface Specifications

For Computer	Hi-Speed USB*
For External USB Device	Hi-Speed USB

* USB 3.0 cables are not supported.

Network Specifications

Wi-Fi Specifications

See the following table for Wi-Fi specifications.

Countries or regions except for those listed below	Table A
Australia New Zealand China Hong Kong South Korea	Table B

Table A

Standards	IEEE802.11b/g/n*1
Frequency Range	2.4 GHz
Channels	1/2/3/4/5/6/7/8/9/10/11/12*2/13*2
Coordination Modes	Infrastructure, Wi-Fi Direct (Simple AP)*3*4
Security Protocols*5	WEP (64/128bit), WPA2-PSK (AES)*6, WPA3-SAE (AES), WPA2/WPA3-Enterprise

*1 Only available for the HT20

*2 Not available in Taiwan

*3 Not supported for IEEE 802.11b

*4 Infrastructure and Wi-Fi Direct modes or an Ethernet connection can be used simultaneously.

*5 Wi-Fi Direct supports WPA2-PSK (AES) only.

*6 Complies with WPA2 standards with support for WPA/WPA2 Personal.

Table B

Standards	IEEE802.11a/b/g/n*1/ac		
Frequency Ranges	IEEE802.11b/g/n: 2.4 GHz, IEEE802.11a/n/ac: 5 GHz		
Channels	Wi-Fi	2.4 GHz	1/2/3/4/5/6/7/8/9/10/11/12/13
		5 GHz*2	W52 (36/40/44/48), W53 (52/56/60/64), W56 (100/104/108/112/116/120/124/128/132/136/140), W58 (149/153/157/161/165)
	Wi-Fi Direct	2.4 GHz	1/2/3/4/5/6/7/8/9/10/11/12/13
		5 GHz*2	W52 (36/40/44/48) W58 (149/153/157/161/165)
Connection Modes	Infrastructure, Wi-Fi Direct (Simple AP) *3*4		
Security Protocols*5	WEP (64/128bit), WPA2-PSK (AES)*6, WPA3-SAE (AES), WPA2/WPA3-Enterprise		

*1 Only available for the HT20

*2 The availability of these channels and use of the product outdoors over these channels varies by location. For more information, see http://support.epson.net/wifi5ghz/

*3 Not supported for IEEE 802.11b

*4 Infrastructure and Wi-Fi Direct modes or an Ethernet connection can be used simultaneously.

*5 Wi-Fi Direct only supports WPA2-PSK (AES) .

*6 Complies with WPA2 standards with support for WPA/WPA2 Personal.

Ethernet Specifications

Standards	IEEE802.3i (10BASE-T)*1 IEEE802.3u (100BASE-TX) IEEE802.3az (Energy Efficient Ethernet)*2
Communication Mode	Auto, 10Mbps Full duplex, 10Mbps Half duplex, 100Mbps Full duplex, 100Mbps Half duplex
Connector	RJ-45

*1 Use a category 5e or higher STP (Shielded twisted pair) cable to prevent risk of radio interference.

*2 The connected device should comply with IEEE802.3az standards.

Network Functions and IPv4/IPv6

Functions			Supported	Remarks
Network Printing	EpsonNet Print (Windows)	IPv4	✓	-
	Standard TCP/IP (Windows)	IPv4, IPv6	✓	-
	WSD Printing (Windows)	IPv4, IPv6	✓	Windows Vista or later
	Bonjour Printing (Mac OS)	IPv4, IPv6	✓	-
	IPP Printing (Windows, Mac OS)	IPv4, IPv6	✓	-
	PictBridge Printing (Wi-Fi)	IPv4	-	Digital camera
	Epson Connect (Email Print, Remote Print)	IPv4	✓	-
	AirPrint (iOS, Mac OS)	IPv4, IPv6	✓	iOS 5 or later, Mac OS X v10.7 or later
Network Scanning	Epson Scan 2	IPv4, IPv6	✓	-
	Epson ScanSmart	IPv4	✓	Windows 7 or later, Mac OS X El Capitan or later
	Event Manager	IPv4	✓	Windows XP, Vista, Mac OS X v10.6 to Yosemite
	Epson Connect (Scan to Cloud)	IPv4	✓	-
	AirPrint (Scan)	IPv4, IPv6	✓	OS X Mavericks or later

Functions			Supported	Remarks
Fax	Send a fax	IPv4	✓	-
	Receive a fax	IPv4	✓	-
	AirPrint (Faxout)	IPv4, IPv6	✓	OS X Mountain Lion or later

Security Protocol

IEEE802.1X*	
IPsec/IP Filtering	
SSL/TLS	HTTPS Server/Client
	IPPS
SMTPS (STARTTLS, SSL/TLS)	
SNMPv3	

* You need to use a device for connection that complies with IEEE802.1X.

Supported Third Party Services

AirPrint	Print	iOS 5 or later/Mac OS X v10.7.x or later
	Scan	OS X Mavericks or later
	Fax	OS X Mountain Lion or later

Memory Device Specifications

Devices	Maximum Capacities
Hard Disk Drive*1 USB Flash Drive	2 TB (formatted in FAT, FAT32, or exFAT.)
Multi-card reader*2	2 TB (formatted in FAT, FAT32, or exFAT)

*1: We do not recommend using external USB devices that are powered by USB. Use only external USB devices with independent AC power sources.

*2: Only insert one memory card into the multi-card reader. Multi-card readers with more than two memory cards inserted are not supported.

You cannot use the following devices:

❏ A device that requires a dedicated driver

❏ A device with security settings (password, encryption, and so on)

❏ A device with a built-in USB hub

Epson cannot guarantee all operations of externally connected devices.

Supported Data Specifications

File Format	JPEGs (*.JPG) with the Exif Version 2.31 standard taken by digital cameras DCF*1 version 1.0 or 2.0*2 compliant TIFF 6.0 compliant images as below ❏ RGB full color images (not compressed) ❏ Binary images (not compressed or CCITT encoded)
Image Size	Horizontal: 80 to 10200 pixels Vertical: 80 to 10200 pixels
File Size	Less than 2 GB
Maximum Number of Files	JPEG: 9990*3 TIFF: 999

*1 Design rule for Camera File system.

*2 Photo data stored on digital cameras with a built-in memory is not supported.

*3 Up to 999 files can be displayed at a time. (If the number of files exceeds 999, the files are displayed in groups.)

Note:
"×" is displayed on the LCD screen when the printer cannot recognize the image file. In this situation, if you select a multiple image layout, blank sections will be printed.

Dimensions

Dimensions	Storage ❏ Width: 425 mm (16.7 in.) ❏ Depth: 500 mm (19.7 in.) ❏ Height: 350 mm (13.8 in.) Printing ❏ Width: 425 mm (16.7 in.) ❏ Depth: 824 mm (32.4 in.) ❏ Height: 459 mm (18.1 in.)
Weight*	Approx. 17.5 kg (38.6 lb)

* Without the ink and the power cord.

Electrical Specifications

Model	100 to 240 V Model	220 to 240 V Model
Rated Frequency Range	50 to 60 Hz	50 to 60 Hz
Rated Current	0.7 to 0.4 A	0.4 A
Power Consumption (with USB Connection)	Standalone copying: Approx. 19.0 W (ISO/IEC24712) Ready mode: Approx. 8.9 W Sleep mode: Approx. 0.8 W Power off: Approx. 0.15 W	Standalone copying: Approx. 19.0 W (ISO/IEC24712) Ready mode: Approx. 8.9 W Sleep mode: Approx. 0.8 W Power off: Approx. 0.2 W

Note:

- *Check the label on the printer for its voltage.*
- *For European users, see the following Website for details on power consumption.*
  http://www.epson.eu/energy-consumption

Environmental Specifications

Operation	Use the printer within the range shown in the following graph. 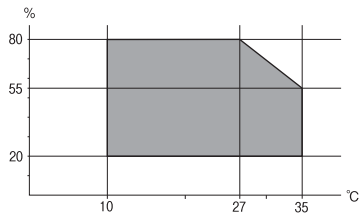 Temperature: 10 to 35°C (50 to 95°F) Humidity: 20 to 80% RH (without condensation)
Storage	Temperature after initial ink charging: -15 to 40°C (5 to 104°F)* Temperature before initial ink charging: -20 to 40°C (-4 to 104°F)* Humidity: 5 to 85% RH (without condensation)

* You can store for one month at 40°C (104°F).

Environmental Specifications for Ink Bottles

Storage Temperature	-20 to 40 °C (-4 to 104 °F)*
Freezing Temperature	-15 °C (5 °F) Ink thaws and is usable after approximately 2 hours at 25 °C (77 °F).

* You can store for one month at 40 °C (104 °F).

Installation Location and Space

Secure enough place to install and operate the printer correctly.

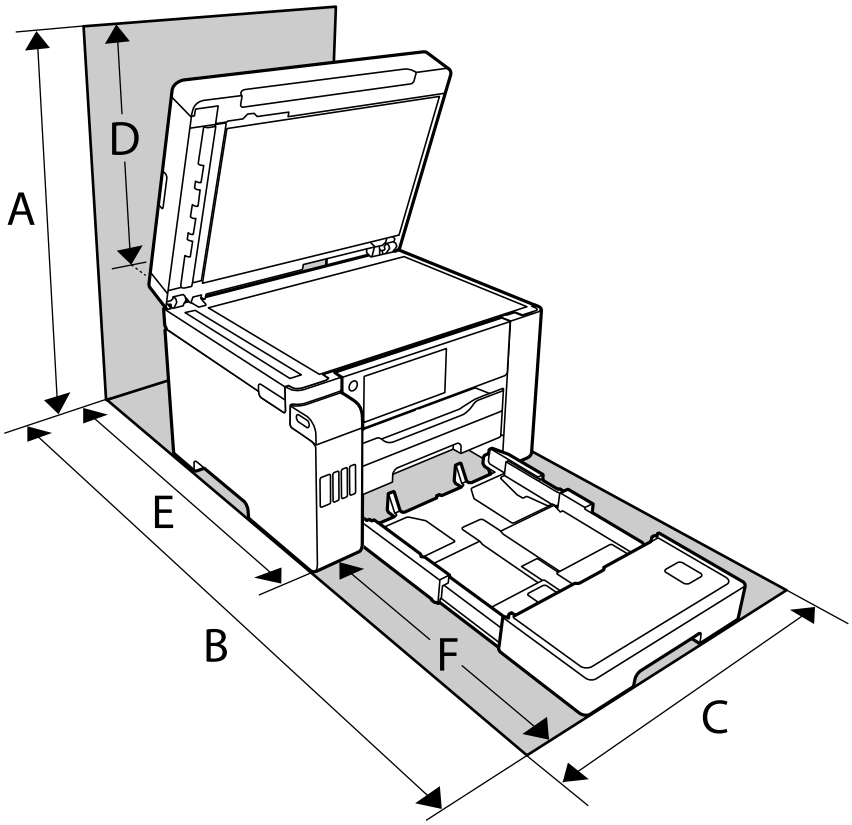

A	681.0mm
B	1074.1mm
C	425.0mm
D	331.0mm
E	175.7mm
F	398.4mm

See "Safety Instructions" in this manual to confirm the environmental conditions.

System Requirements

- ❏ Windows 10 (32-bit, 64-bit)/Windows 8.1 (32-bit, 64-bit)/Windows 8 (32-bit, 64-bit)/Windows 7 (32-bit, 64-bit)/Windows Vista (32-bit, 64-bit)/Windows XP SP3 or later (32-bit)/Windows XP Professional x64 Edition SP2 or later/Windows Server 2019/Windows Server 2016/Windows Server 2012 R2/Windows Server 2012/Windows Server 2008 R2/Windows Server 2008/Windows Server 2003 R2/Windows Server 2003 SP2 or later
- ❏ macOS Catalina/macOS Mojave/macOS High Sierra/macOS Sierra/OS X El Capitan/OS X Yosemite/OS X Mavericks/OS X Mountain Lion/Mac OS X v10.7.x/Mac OS X v10.6.8

Note:
- *Mac OS may not support some applications and features.*
- *The UNIX File System (UFS) for Mac OS is not supported.*

Regulatory Information

Standards and Approvals

Standards and Approvals for U.S. Model

Safety	UL60950-1 CAN/CSA-C22.2 No.60950-1
EMC	FCC Part 15 Subpart B Class B CAN ICES-3 (B)/NMB-3 (B)

This equipment contains the following wireless module.

Manufacturer: Seiko Epson Corporation

Type: J26H005

This product conforms to Part 15 of the FCC Rules and RSS-210 of the IC Rules. Epson cannot accept responsibility for any failure to satisfy the protection requirements resulting from a non-recommended modification of the product. Operation is subject to the following two conditions: (1) this device may not cause harmful interference, and (2) this device must accept any interference received, including interference that may cause undesired operation of the device.

To prevent radio interference to the licensed service, this device is intended to be operated indoors and away from windows to provide maximum shielding. Equipment (or its transmit antenna) that is installed outdoors is subject to licensing.

This equipment complies with FCC/IC radiation exposure limits set forth for an uncontrolled environment and meets the FCC radio frequency (RF) Exposure Guidelines in Supplement C to OET65 and RSS-102 of the IC radio frequency (RF) Exposure rules. This equipment should be installed and operated so that the radiator is kept at least 7.9 inches (20 cm) or more away from a person's body (excluding extremities: hands, wrists, feet and ankles).

Standards and Approvals for European Model

For European users

Hereby, Seiko Epson Corporation declares that the following radio equipment model is in compliance with Directive 2014/53/EU. The full text of the EU declaration of conformity is available at the following website.

http://www.epson.eu/conformity

C762B

For use only in Ireland, UK, Austria, Germany, Liechtenstein, Switzerland, France, Belgium, Luxemburg, Netherlands, Italy, Portugal, Spain, Denmark, Finland, Norway, Sweden, Iceland, Croatia, Cyprus, Greece, Slovenia, Malta, Bulgaria, Czech, Estonia, Hungary, Latvia, Lithuania, Poland, Romania, and Slovakia.

Epson cannot accept responsibility for any failure to satisfy the protection requirements resulting from a non-recommended modification of the products.

Frequency	Maximum Radio-Frequency Power Transmitted
2400-2483.5 MHz	20 dBm (EIRP)

CE

Standards and Approvals for Australian Model

EMC	AS/NZS CISPR32 Class B

Epson hereby declares that the following equipment Models are in compliance with the essential requirements and other relevant provisions of AS/NZS4268:

C762A

Epson cannot accept responsibility for any failure to satisfy the protection requirements resulting from a non-recommended modification of the products.

Standards and Approvals for New Zealand Model

General Warning

The grant of a Telepermit for any item of terminal equipment indicates only that Telecom has accepted that the item complies with minimum conditions for connection to its network. It indicates no endorsement of the product by Telecom, nor does it provide any sort of warranty. Above all, it provides no assurance that any item will work correctly in all respects with another item of Telepermitted equipment of a different make or model, nor does it imply that any product is compatible with all of Telecom's network services.

Telepermitted equipment only may be connected to the EXT telephone port. This port is not specifically designed for 3-wire-connected equipment. 3-wire-connected equipment might not respond to incoming ringing when attached to this port.

Important Notice

Under power failure conditions, this telephone may not operate. Please ensure that a separate telephone, not dependent on local power, is available for emergency use.

This equipment is not capable, under all operating conditions, of correct operation at the higher speeds for which it is designed. Telecom will accept no responsibility should difficulties arise in such circumstances.

This equipment shall not be set up to make automatic calls to the Telecom '111' Emergency Service.

Restrictions on Copying

Observe the following restrictions to ensure the responsible and legal use of the printer.

Copying of the following items is prohibited by law:

- ❏ Bank bills, coins, government-issued marketable securities, government bond securities, and municipal securities

- ❏ Unused postage stamps, pre-stamped postcards, and other official postal items bearing valid postage
- ❏ Government-issued revenue stamps, and securities issued according to legal procedure

Exercise caution when copying the following items:

- ❏ Private marketable securities (stock certificates, negotiable notes, checks, etc.), monthly passes, concession tickets, etc.
- ❏ Passports, driver's licenses, warrants of fitness, road passes, food stamps, tickets, etc.

Note:
Copying these items may also be prohibited by law.

Responsible use of copyrighted materials:

Printers can be misused by improperly copying copyrighted materials. Unless acting on the advice of a knowledgeable attorney, be responsible and respectful by obtaining the permission of the copyright holder before copying published material.

Administrator Information

Connecting the Printer to the Network. 341

Settings to Use the Printer. 345

Managing the Printer. 405

Advanced Security Settings. 420

Connecting the Printer to the Network

You can connect the printer to the network in several ways.

❏ Connect by using advanced settings on the control panel.

❏ Connect by using the installer on the website or on the software disc.

This section explains the procedure to connect the printer to the network using the printer's control panel.

Before Making Network Connection

To connect to the network, check the connection method and setting information for connection in advance.

Gathering Information on the Connection Setting

Prepare the necessary setting information to connect. Check the following information in advance.

Divisions	Items	Note
Device connection method	❏ Ethernet ❏ Wi-Fi	Decide how to connect the printer to the network. For Wired LAN, connects to the LAN switch. For Wi-Fi, connects to the network (SSID) of the access point.
LAN connection information	❏ IP address ❏ Subnet mask ❏ Default gateway	Decide the IP address to assign to the printer. When you assign the IP address statically, all values are required. When you assign the IP address dynamically using the DHCP function, this information is not required because it is set automatically.
Wi-Fi connection information	❏ SSID ❏ Password	These are the SSID (network name) and the password of the access point that the printer connects to. If MAC address filtering has been set, register the MAC address of the printer in advance to register the printer. See the following for the supported standards. "Wi-Fi Specifications" on page 330
DNS server information	❏ IP address for primary DNS ❏ IP address for secondary DNS	These are required when specifying DNS servers. The secondary DNS is set when the system has a redundant configuration and there is a secondary DNS server. If you are in a small organization and do not set the DNS server, set the IP address of the router.
Proxy server information	❏ Proxy server name	Set this when your network environment uses the proxy server to access the internet from the intranet, and you use the function that the printer directly accesses to the internet. For the following functions, the printer directly connects to the internet . ❏ Epson Connect Services ❏ Cloud services of other companies ❏ Firmware updating

Divisions	Items	Note
Port number information	❏ Port number to release	Check the port number used by the printer and computer, then release the port that is blocked by a firewall, if necessary. See the following for the port number used by the printer. "Using Port for the Printer" on page 328

IP Address Assignment

These are the following types of IP address assignment.

Static IP address:

Assign the predetermined IP address to the printer (host) manually.

The information to connect to the network (subnet mask, default gateway, DNS server and so on) need to be set manually.

The IP address does not change even when the device is turned off, so this is useful when you want to manage devices with an environment where you cannot change the IP address or you want to manage devices using the IP address. We recommend settings to the printer, server, etc. that many computers access. Also, when using security features such as IPsec / IP filtering, assign a fixed IP address so that the IP address does not change.

Automatic assignment by using DHCP function (dynamic IP address):

Assign the IP address automatically to the printer (host) by using the DHCP function of the DHCP server or router.

The information to connect to the network (subnet mask, default gateway, DNS server and so on) is set automatically, so you can easily connect the device to the network.

If the device or the router is turned off, or depending on the DHCP server settings, IP address may change when re-connecting.

We recommend managing devices other than the IP address and communicating with protocols that can follow the IP address.

Note:
When you use the IP address reservation function of the DHCP, you can assign the same IP address to the devices at any time.

DNS Server and Proxy Server

The DNS server has a host name, domain name of the email address, etc. in association with the IP address information.

Communication is impossible if the other party is described by host name, domain name, etc. when the computer or the printer performs IP communication.

Queries the DNS server for that information and gets the IP address of the other party. This process is called name resolution.

Therefore, the devices such as computers and printers can communicate using the IP address.

Name resolution is necessary for the printer to communicate using the email function or Internet connection function.

When you use those functions, make the DNS server settings.

When you assign the printer's IP address by using the DHCP function of the DHCP server or router, it is automatically set.

The proxy server is placed at the gateway between the network and the Internet, and it communicates to the computer, printer, and Internet (opposite server) on behalf of each of them. The opposite server communicates only to the proxy server. Therefore, printer information such as the IP address and port number cannot be read and increased security is expected.

When you connect to the Internet via a proxy server, configure the proxy server on the printer.

Connecting to the Network from the Control Panel

Connect the printer to the network by using the printer's control panel.

Assigning the IP Address

Set up the basic items such as Host Address, Subnet Mask, Default Gateway.

This section explains the procedure for setting a static IP address.

1. Turn on the printer.

2. Select **Settings** on the home screen on the printer's control panel.

3. Select **General Settings** > **Network Settings** > **Advanced** > **TCP/IP**.

4. Select **Manual** for **Obtain IP Address**.

   When you set the IP address automatically by using the DHCP function of router, select **Auto**. In that case, the **IP Address**, **Subnet Mask**, and **Default Gateway** on step 5 to 6 are also set automatically, so go to step 7.

5. Enter the IP address.

   Focus moves to the forward segment or the back segment separated by a period if you select ◀ and ▶.

   Confirm the value reflected on the previous screen.

6. Set up the **Subnet Mask** and **Default Gateway**.

   Confirm the value reflected on the previous screen.

   > ***Important:***
   > *If the combination of the IP Address, Subnet Mask and Default Gateway is incorrect, **Start Setup** is inactive and cannot proceed with the settings. Confirm that there is no error in the entry.*

7. Enter the IP address for the primary DNS server.

   Confirm the value reflected on the previous screen.

   Note:
   *When you select **Auto** for the IP address assignment settings, you can select the DNS server settings from **Manual** or **Auto**. If you cannot obtain the DNS server address automatically, select **Manual** and enter the DNS server address. Then, enter the secondary DNS server address directly. If you select **Auto**, go to step 9.*

8. Enter the IP address for the secondary DNS server.

   Confirm the value reflected on the previous screen.

9. Tap **Start Setup**.

Setting the Proxy Server

Set up the proxy server if both of the following are true.

❏ The proxy server is built for Internet connection.

❏ When using a function in which a printer directly connects to the Internet, such as Epson Connect service or another company's cloud services.

1. Select **Settings** on the home screen.

   When making settings after IP address setting, the **Advanced** screen is displayed. Go to step 3.

2. Select **General Settings** > **Network Settings** > **Advanced**.

3. Select **Proxy Server**.

4. Select **Use** for **Proxy Server Settings**.

5. Enter the address for the proxy server by IPv4 or FQDN format.

   Confirm the value reflected on the previous screen.

6. Enter the port number for the proxy server.

   Confirm the value reflected on the previous screen.

7. Tap **Start Setup**.

Connecting to LAN

Connect the printer to the network by Ethernet or Wi-Fi.

Connecting to Ethernet

Connect the printer to the network by using the Ethernet cable, and check the connection.

1. Connect the printer and hub (LAN switch) by Ethernet cable.

2. Select **Settings** on the home screen.

3. Select **General Settings** > **Network Settings** > **Connection Check**.

   The connection diagnosis result is displayed. Confirm the connection is correct.

4. Tap **OK** to finish.

   When you tap **Print Check Report**, you can print the diagnosis result. Follow the on-screen instructions to print it.

Related Information

➡ "Changing the Network Connection from Wi-Fi to Ethernet" on page 262

Connecting to the Wireless LAN (Wi-Fi)

You can connect the printer to the wireless LAN (Wi-Fi) in several ways. Choose the connection method that matches the environment and conditions that you are using.

If you know the information for the wireless router such as SSID and password, you can make settings manually.

If the wireless router supports WPS, you can make settings by using push button setup.

After connecting the printer to the network, connect to the printer from the device that you want to use (computer, smart device, tablet, and so on.)

Related Information

➡ "Making Wi-Fi Settings by Entering the SSID and Password" on page 264
➡ "Making Wi-Fi Settings by Push Button Setup (WPS)" on page 265
➡ "Making Wi-Fi Settings by PIN Code Setup (WPS)" on page 266

Settings to Use the Printer

Using the Print Functions

Enable to use the print function through the network.

To use the printer on the network, you need to set the port for network connection on the computer as well as the printer's network connection.

Printer Connection Types

The following two methods are available for the printer's network connection.

❏ Peer to peer connection (direct printing)

❏ Server / client connection (printer sharing using the Windows server)

Peer to Peer Connection Settings

This is the connection to connect the printer on the network and the computer directly. Only a network-capable model can be connected.

Connection method:

Connect the printer to the network directly via hub or access point.

Printer driver:

Install the printer driver on each client computer.

When using EpsonNet SetupManager, you can provide the driver's package that includes the printer settings.

Features:

❏ The print job starts immediately because the print job is sent to the printer directly.

❏ You can print as long as the printer runs.

Server / Client Connection Settings

This is the connection that the server computer shares with the printer. To prohibit the connection without going through the server computer, you can enhance the security.

When using USB, the printer without the network function can be also shared.

Connection method:

Connect the printer to the network via LAN switch or access point.

You can also connect the printer to the server directly by USB cable.

Printer driver:

Install the printer driver on the Windows server depending on the OS of the client computers.

By accessing the Windows server and linking the printer, the printer driver is installed on the client computer and can be used.

Features:

❏ Manage the printer and the printer driver in batch.

❏ Depending on the server spec, it may take time to start the print job because all print jobs go through the print server.

❏ You cannot print when the Windows server is turned off.

Print Settings for Peer to Peer Connection

For peer to peer connection (direct printing), a printer and a client computer have a one-to-one relationship.

The printer driver must be installed on each client computer.

Print Settings for Server / Client Connection

Enable to print from the printer that is connected as the server / client connection.

For the server / client connection, set up the print server first, and then share the printer on the network.

When using the USB cable to connect to the server, also set the print server first, and then share the printer on the network.

Setting Up the Network Ports

Create the print queue for network printing on the print server by using standard TCP/IP, and then set the network port.

This example is when using Windows 2012 R2.

1. Open the devices and printers screen.

   Desktop > **Settings** > **Control Panel** > **Hardware and Sound** or **Hardware** > **Devices and Printers**.

2. Add a printer.

   Click **Add printer**, and then select **The printer that I want isn't listed**.

3. Add a local printer.

   Select **Add a local printer or network printer with manual settings**, and then click **Next**.

4. Select **Create a new port**, select **Standard TCP/IP Port** as the Port Type, and then click **Next**.

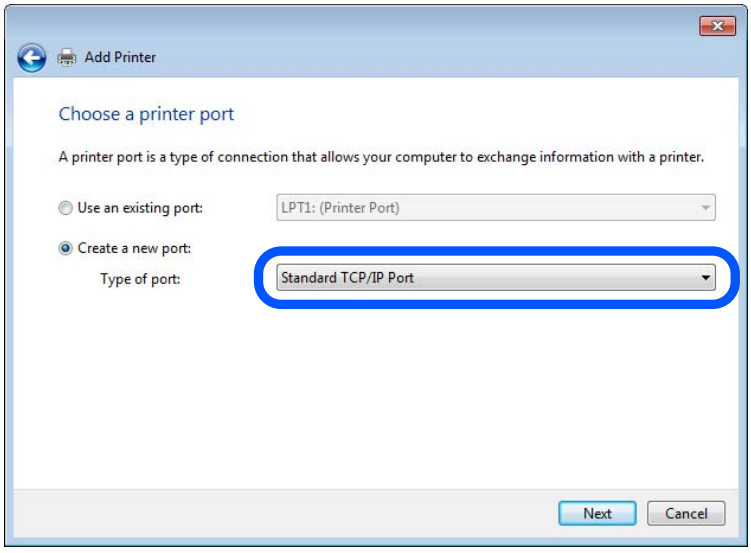

5. Enter the printer's IP address or printer name in **Host Name or IP Address** or **Printer Name or IP Address**, and then click **Next**.

   Example:

   ❏ Printer name : EPSONA1A2B3C

   ❏ IP address : 192.0.2.111

   Do not change **Port name**.

Click **Continue** when the **User Account Control** screen is displayed.

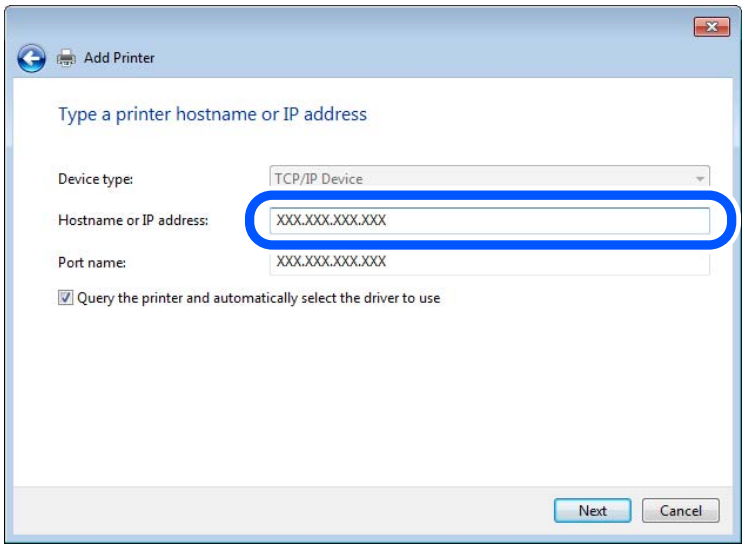

Note:
If you specify the printer name on the network where the name resolution is available, the IP address is tracked even if printer's IP address has been changed by DHCP. You can confirm the printer name from the network status screen on the printer's control panel or network status sheet.

6. Set the printer driver.

   ❏ If the printer driver is already installed:

   Select **Manufacturer** and **Printers**. Click **Next**.

7. Follow the on-screen instructions.

When using the printer under the server / client connection (printer sharing using the Windows server), make the sharing settings hereafter.

Checking the Port Configuration - Windows

Check if the correct port is set for the print queue.

1. Open the devices and printers screen.

   Desktop > **Settings** > **Control Panel** > **Hardware and Sound** or **Hardware** > **Devices and Printers**.

2. Open the printer properties screen.

   Right-click the printer icon, and then click **Printer properties**.

3. Click the **Ports** tab, select **Standard TCP/IP Port**, and then click **Configure Port**.

4. Check the port configuration.

   ❏ For RAW

   Check that **Raw** is selected in **Protocol**, and then click **OK**.

❏ For LPR

Check that **LPR** is selected in **Protocol**. Enter "PASSTHRU" in **Queue name** from **LPR Settings**. Select **LPR Byte Counting Enabled**, and then click **OK**.

Sharing the Printer (Windows only)

When using the printer under the server / client connection (printer sharing using the Windows server), set up the printer sharing from the print server.

1. Select **Control Panel** > **View devices and printers** on the print server.
2. Right-click the printer icon (print queue) that you want to share with, and then select **Printer Properties** > **Sharing** tab.
3. Select **Share this printer** and then enter to **Share name**.

   For Windows Server 2012, click **Change Sharing Options** and then configure the settings.

Installing Additional Drivers (Windows only)

If the Windows versions for a server and clients are different, it is recommended to install additional drivers to the print server.

1. Select **Control Panel** > **View devices and printers** on the print server.
2. Right-click the printer icon that you want to share with the clients, and then click **Printer Properties** > **Sharing** tab.
3. Click **Additional Drivers**.

   For Windows Server 2012, click Change Sharing Options and then configure the settings.
4. Select versions of Windows for clients, and then click OK.
5. Select the information file for the printer driver (*.inf) and then install the driver.

Using the Shared Printer – Windows

The administrator needs to inform the clients of the computer name assigned to the print server and how to add it to their computers. If the additional driver(s) have not been configured yet, inform the clients how to use **Devices and Printers** to add the shared printer.

If additional driver(s) have already been configured on the print server, follow these steps:

1. Select the name assigned to the print server in **Windows Explorer**.
2. Double-click the printer that you want to use.

Basic Settings for Printing

Set the print settings, such as paper size or printing error.

Setting the Paper Source

Set the size and type of paper to be loaded in each paper source.

1. Access Web Config and select the **Print** tab > **Paper Source Settings**.

2. Set each item.

   The displayed items may vary by the situation.

   ❏ Paper source name

   Display the target paper source name, such as **Rear Paper Feed**, **Cassette 1**.

   ❏ **Paper Size**

   Select the paper size you want to set from the pull-down menu.

   ❏ **Unit**

   Select the unit of the user-defined size. You can select it when **User defined** is selected on **Paper Size**.

   ❏ **Width**

   Set the horizontal length of the user-defined size.

   The range you can enter here depends on the paper source, which is indicated on the side of **Width**.

   When you select **mm** in **Unit**, you can enter up to one decimal place.

   When you select **inch** in **Unit**, you can enter up to two decimal places.

   ❏ **Height**

   Set the vertical length of the user-defined size.

   The range you can enter here depends on the paper source, which is indicated on the side of **Height**.

   When you select **mm** in **Unit**, you can enter up to one decimal place.

   When you select **inch** in **Unit**, you can enter up to two decimal places.

   ❏ **Paper Type**

   Select the paper type you want to set from the pull-down menu.

3. Check the settings, and then click **OK**.

Setting Errors

Set the displaying error for the device.

1. Access Web Config and select the **Print** tab > **Error Settings**.

2. Set each item.

   ❏ Paper Size Notice

   Set whether to display an error on the control panel when the paper size of the specified paper source is different from the paper size of the print data.

   ❏ Paper Type Notice

   Set whether to display an error on the control panel when the paper type of the specified paper source is different from the paper type of the print data.

   ❏ Auto Error Solver

   Set whether to automatically cancel the error if there is no operation on the control panel for 5 seconds after displaying the error.

3. Check the settings, and then click **OK**.

Setting Universal Print

Set when you print from external devices without using the printer driver.

Some items are not displayed depending on the printing language of your printer.

1. Access Web Config and select the **Print** tab > **Universal Print Settings**.
2. Set each item.
3. Check the settings, and then click **OK**.

Basic

Items	Explanation
Top Offset(-30.0-30.0mm)	Sets the vertical position of the paper on which printing starts.
Left Offset(-30.0-30.0mm)	Sets the horizontal position of the paper on which printing starts.
Top Offset in Back(-30.0-30.0mm)	Sets the vertical position of the paper on which the printing of the back side of the paper starts in duplex printing.
Left Offset in Back(-30.0-30.0mm)	Sets the horizontal position of the paper on which the printing of the back side of the paper starts in duplex printing.
Check Paper Width	Set whether to check paper width when printing.
Skip Blank Page	If there is a blank page in the print data, set not to print a blank page.

Setting Up AirPrint

Set when using AirPrint printing and scanning.

Access Web Config and select the **Network** tab > **AirPrint Setup**.

Items	Explanation
Bonjour Service Name	Enter the Bonjour service name between 1 and 41 characters in ASCII (0x20-0x7E).
Bonjour Location	Enter location information such as the printer's placement within 127 bytes or less in Unicode (UTF-8).
Geolocation Latitude and Longitude (WGS84)	Enter the printer's location information. This entry is optional. Enter values by using WGS-84 datum, which separates latitude and longitude with a comma. You can enter -90 to +90 for the latitude value, and -180 to +180 for the longitude value. You can enter less than a decimal to the sixth place, and you can omit "+".
Top Priority Protocol	Select top priority protocol from IPP and Port9100.
Wide-Area Bonjour	Set whether or not to use Wide-Area Bonjour. If you use it, the printers must be registered on the DNS server to be able to search the printer over the segment.

Items	Explanation
Require PIN Code when using IPP printing	Select whether or not to require a PIN code when using IPP printing. If you select **Yes**, IPP print jobs without PIN codes are not saved in the printer.
Enable AirPrint	IPP, Bonjour, AirPrint (Scan service) are enabled, and IPP is established only with secure communication.

Configuring a Mail Server

Set the mail server from Web Config.

Check below before setting up.

❏ The printer is connected to the network that can access the mail server.

❏ Email setting information of the computer that uses the same mail server as the printer.

Note:

❏ *When you use the mail server on the Internet, confirm the setting information from the provider or website.*

❏ *You can also set the mail server from the printer's control panel. Access as below.*

Settings > ***General Settings*** > ***Network Settings*** > ***Advanced*** > ***Email Server*** > ***Server Settings***

1. Access Web Config and select the **Network** tab > **Email Server** > **Basic**.

2. Enter a value for each item.

3. Select **OK**.

   The settings you have selected are displayed.

   When the setup completes, perform the connection check.

Related Information

➡ "Running Web Config on a Web Browser" on page 299

Mail Server Setting Items

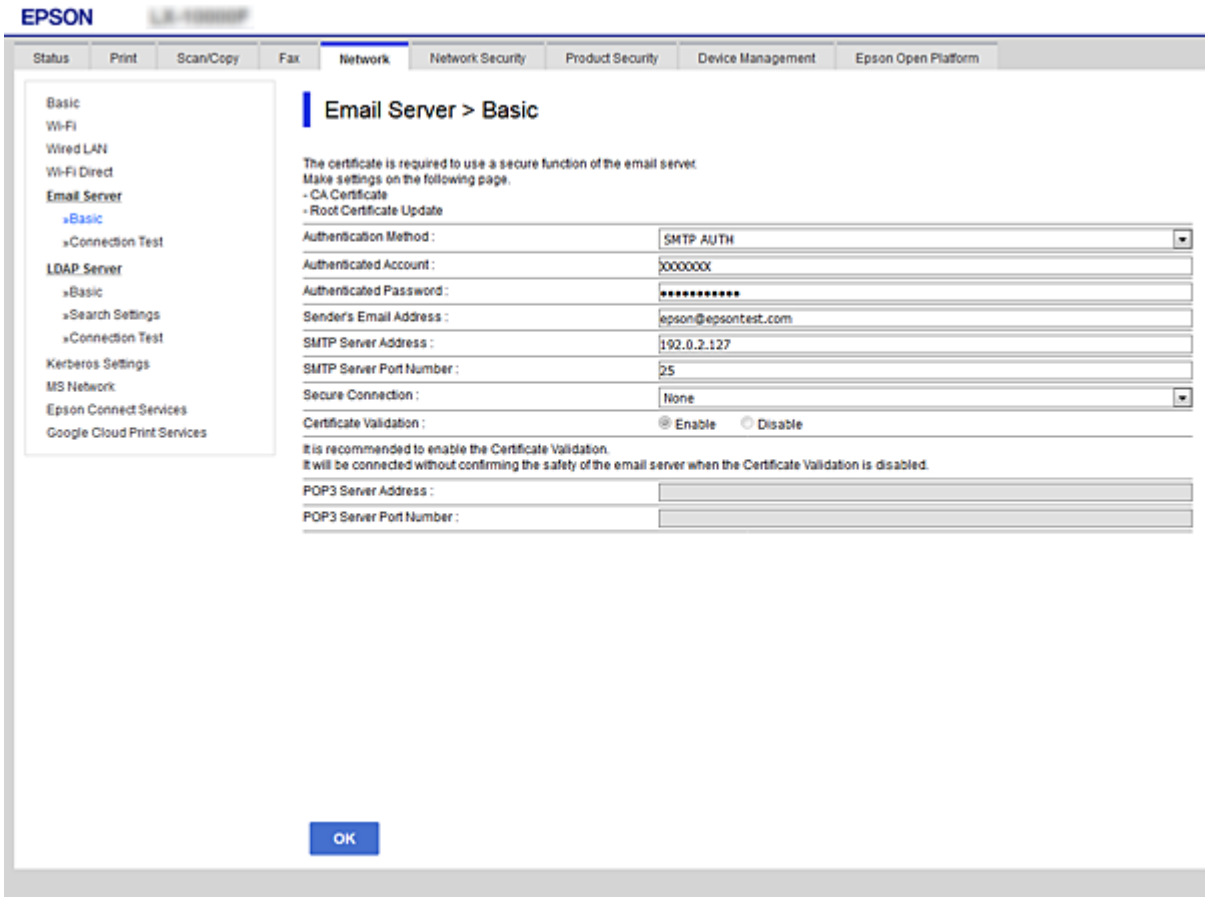

Items	Settings and Explanation	
Authentication Method	Specify the authentication method for the printer to access the mail server.	
	Off	Set when the mail server does not need authentication.
	SMTP AUTH	Authenticates on the SMTP server (outgoing mail server) when sending the email. The mail server needs to support SMTP authentication.
	POP before SMTP	Authenticates on the POP3 server (receiving mail server) before sending the email. When you select this item, set the POP3 server.
Authenticated Account	If you select **SMTP AUTH** or **POP before SMTP** as the **Authentication Method**, enter the authenticated account name between 0 and 255 characters in ASCII (0x20-0x7E). When you select **SMTP AUTH**, enter the SMTP server account. When you select **POP before SMTP**, enter the POP3 server account.	
Authenticated Password	If you select **SMTP AUTH** or **POP before SMTP** as the **Authentication Method**, enter the authenticated password between 0 and 20 characters in ASCII (0x20-0x7E). When you select **SMTP AUTH**, enter the authenticated account for the SMTP server. When you select **POP before SMTP**, enter the authenticated account for the POP3 server.	

Items	Settings and Explanation	
Sender's Email Address	Enter the sender's email address such as the email address of the system administrator. This is used when authenticating, so enter a valid email address that is registered to the mail server. Enter between 0 and 255 characters in ASCII (0x20-0x7E) except for : ( ) < > [ ] ; ¥. A period "." cannot be the first character.	
SMTP Server Address	Enter between 0 and 255 characters using A-Z a-z 0-9 . - . You can use IPv4 or FQDN format.	
SMTP Server Port Number	Enter a number between 1 and 65535.	
Secure Connection	Select the encryption method of the communication to the mail server.	
	None	If you select **POP before SMTP** in **Authentication Method**, the connection is not encrypted.
	SSL/TLS	This is available when **Authentication Method** is set to **Off** or **SMTP AUTH**. Communication is encrypted from the start.
	STARTTLS	This is available when **Authentication Method** is set to **Off** or **SMTP AUTH**. Communication is not encrypted from the start, but depending on the network environment, whether the communication is encrypted or not is changed.
Certificate Validation	The certificate is validated when this is enabled. We recommend this is set to **Enable**. To set up, you need to import the CA Certificate to the printer.	
POP3 Server Address	If you select **POP before SMTP** as the **Authentication Method**, enter the POP3 server address between 0 and 255 characters using A-Z a-z 0-9 . - . You can use IPv4 or FQDN format.	
POP3 Server Port Number	If you select **POP before SMTP** as the **Authentication Method**, enter a number between 1 and 65535.	

Checking a Mail Server Connection

You can check the connection to the mail server by performing the connection check.

1. Access Web Config and select the **Network** tab > **Email Server** > **Connection Test**.

2. Select **Start**.

   The connection test to the mail server is started. After the test, the check report is displayed.

   Note:
   You can also check the connection to the mail server from the printer's control panel. Access as below.

   Settings > ***General Settings*** > ***Network Settings*** > ***Advanced*** > ***Email Server*** > ***Connection Check***

Mail Server Connection Test References

Messages	Cause
Connection test was successful.	This message appears when the connection with the server is successful.

Messages	Cause
SMTP server communication error. Check the following. - Network Settings	This message appears when ❏ The printer is not connected to a network ❏ SMTP server is down ❏ Network connection is disconnected while communicating ❏ Received incomplete data
POP3 server communication error. Check the following. - Network Settings	This message appears when ❏ The printer is not connected to a network ❏ POP3 server is down ❏ Network connection is disconnected while communicating ❏ Received incomplete data
An error occurred while connecting to SMTP server. Check the followings. - SMTP Server Address - DNS Server	This message appears when ❏ Connecting to a DNS server failed ❏ Name resolution for an SMTP server failed
An error occurred while connecting to POP3 server. Check the followings. - POP3 Server Address - DNS Server	This message appears when ❏ Connecting to a DNS server failed ❏ Name resolution for an POP3 server failed
SMTP server authentication error. Check the followings. - Authentication Method - Authenticated Account - Authenticated Password	This message appears when SMTP server authentication failed.
POP3 server authentication error. Check the followings. - Authentication Method - Authenticated Account - Authenticated Password	This message appears when POP3 server authentication failed.
Unsupported communication method. Check the followings. - SMTP Server Address - SMTP Server Port Number	This message appears when you try to communicate with unsupported protocols.
Connection to SMTP server failed. Change Secure Connection to None.	This message appears when an SMTP mismatch occurs between a server and a client, or when the server does not support SMTP secure connection (SSL connection).
Connection to SMTP server failed. Change Secure Connection to SSL/TLS.	This message appears when an SMTP mismatch occurs between a server and a client, or when the server requests to use an SSL/TLS connection for an SMTP secure connection.
Connection to SMTP server failed. Change Secure Connection to STARTTLS.	This message appears when an SMTP mismatch occurs between a server and a client, or when the server requests to use an STARTTLS connection for an SMTP secure connection.
The connection is untrusted. Check the following. - Date and Time	This message appears when the printer's date and time setting is incorrect or the certificate has expired.
The connection is untrusted. Check the following. - CA Certificate	This message appears when the printer does not have a root certificate corresponding to the server or a CA Certificate has not been imported.
The connection is not secured.	This message appears when the obtained certificate is damaged.

Messages	Cause
SMTP server authentication failed. Change Authentication Method to SMTP-AUTH.	This message appears when an authentication method mismatch occurs between a server and a client. The server supports SMTP AUTH.
SMTP server authentication failed. Change Authentication Method to POP before SMTP.	This message appears when an authentication method mismatch occurs between a server and a client. The server does not support SMTP AUTH.
Sender's Email Address is incorrect. Change to the email address for your email service.	This message appears when the specified sender's Email address is wrong.
Cannot access the printer until processing is complete.	This message appears when the printer is busy.

Setting a Shared Network Folder

Set a shared network folder to save the scanned image and the results of faxing.

When saving a file to the folder, the printer logs on as the user of the computer on which the folder was created.

Also, make sure you setup MS Network when creating the shared network folder.

Creating the Shared Folder

Before Creating the Shared Folder

Before creating the shared folder, check the following.

❏ The printer is connected to the network where it can access the computer where the shared folder will be created.

❏ A multi-byte character is not included in the name of the computer where the shared folder will be created.

Important:

When a multi-byte character is included in the computer name, saving the file to the shared folder may fail.

In that case, change to the computer that does not include the Multi-byte character in the name or change the computer name.

When changing the computer name, make sure to confirm with the administrator in advance because it may affect some settings, such as computer management, resource access, etc.

Checking the Network Profile

On the computer where the shared folder will be created, check whether folder sharing is available.

1. Log in to the computer where the shared folder will be created by the administrator authority user account.

2. Select **Control Panel** > **Network and Internet** > **Network and Sharing Center**.

3. Click **Advanced sharing settings**, and then click for the profile with **(current profile)** in the displayed network profiles.

4. Check whether **Turn on file and printer sharing** is selected on **File and Printer Sharing**.

   If already selected, click **Cancel** and close the window.

   When you change the settings, click **Save Changes** and close the window.

Related Information

➡ "Location Where the Shared Folder is Created and an Example of the Security" on page 357

Location Where the Shared Folder is Created and an Example of the Security

Depending on the location where the shared folder is created, security and convenience vary.

To operate the shared folder from the printers or other computers, the following reading and changing permissions for the folder are required.

❏ **Sharing** tab > **Advanced Sharing** > **Permissions**

It controls the network access permission of the shared folder.

❏ Access permission of **Security** tab

It controls permission of the network access and local access of the shared folder.

When you set **Everyone** to the shared folder that is created on the desktop, as an example of creating a shared folder, all users who can access the computer will be permitted access.

However, the user who does not have authority cannot access them because the desktop (folder) is under the control of the user folder, and then the security settings of the user folder are handed down to it. The user who is permitted access on the **Security** tab (user logged in and administrator in this case) can operate the folder.

See below to create the proper location.

This example is when creating the "scan_folder" folder.

Related Information

➡ "Example of Configuration for File Servers" on page 357
➡ "Example of Configuration for a Personal Computer" on page 363

Example of Configuration for File Servers

This explanation is an example for creating the shared folder on the root of the drive on the shared computer, such as the file server under the following condition.

Access controllable users, such as someone who has the same domain of a computer to create a shared folder, can access the shared folder.

Set this configuration when you permit any user to read and write to the shared folder on the computer, such as the file server and the shared computer.

❏ Place for creating shared folder: Root of drive

❏ Folder path: C:\scan_folder

❏ Access permission via network (Share Permissions): Everyone

❏ Access permission on file system (Security): Authenticated Users

1. Log in to the computer where the shared folder will be created by the administrator authority user account.

2. Start explorer.

3. Create the folder on the root of drive, and then name it "scan_folder".

   For the folder name, enter between 1 and 12 alphanumeric characters. If the character limit of the folder name is exceeded, you may not be able to access it normally by the varied environment.

4. Right click the folder, and then select **Properties**.

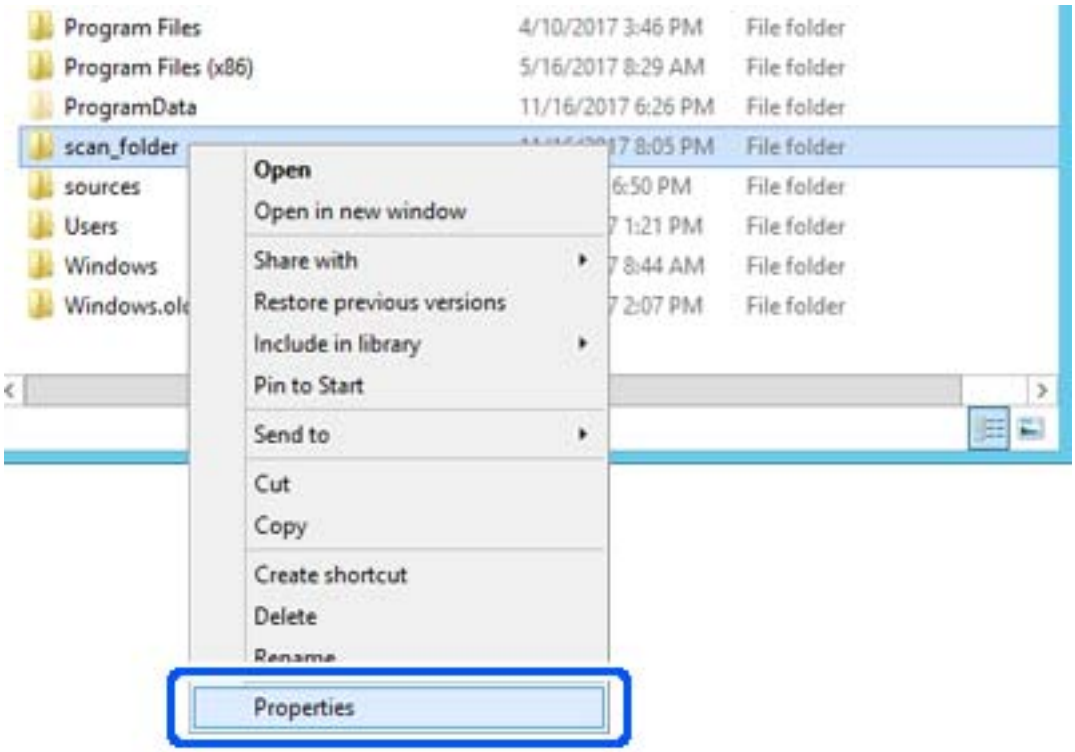

5. Click **Advanced Sharing** on the **Sharing** tab.

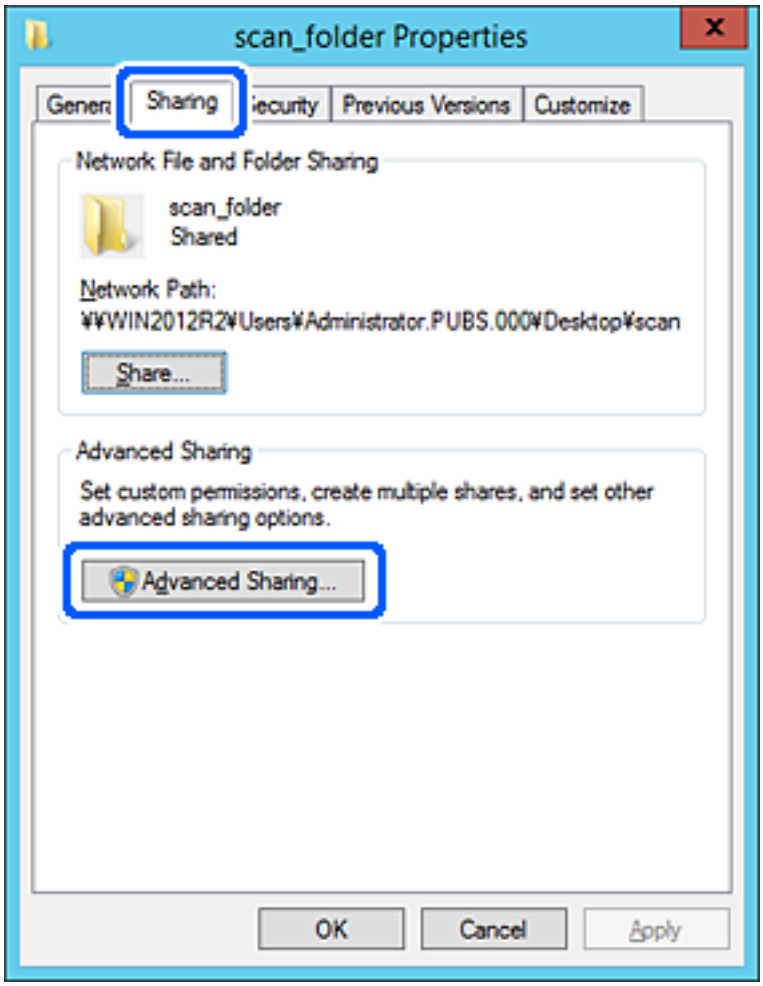

6. Select **Share this folder**, and then click **Permissions**.

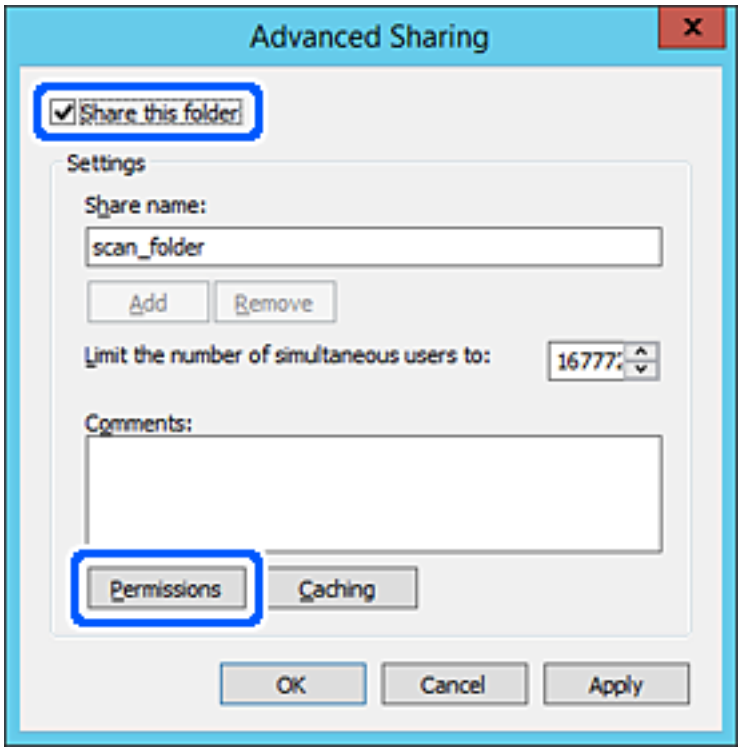

7. Select **Everyone** group of **Group or user names**, select **Allow** on **Change**, and then click **OK**.

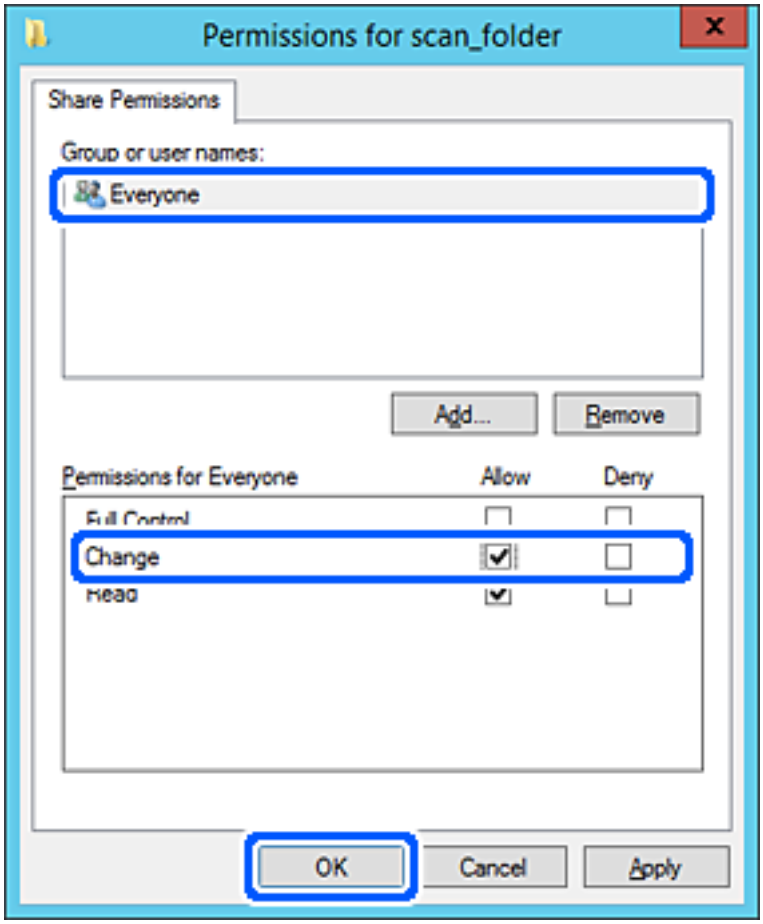

8. Click **OK**.

9. Select **Security** tab, and then select **Authenticated Users** on the **Group or user names**.

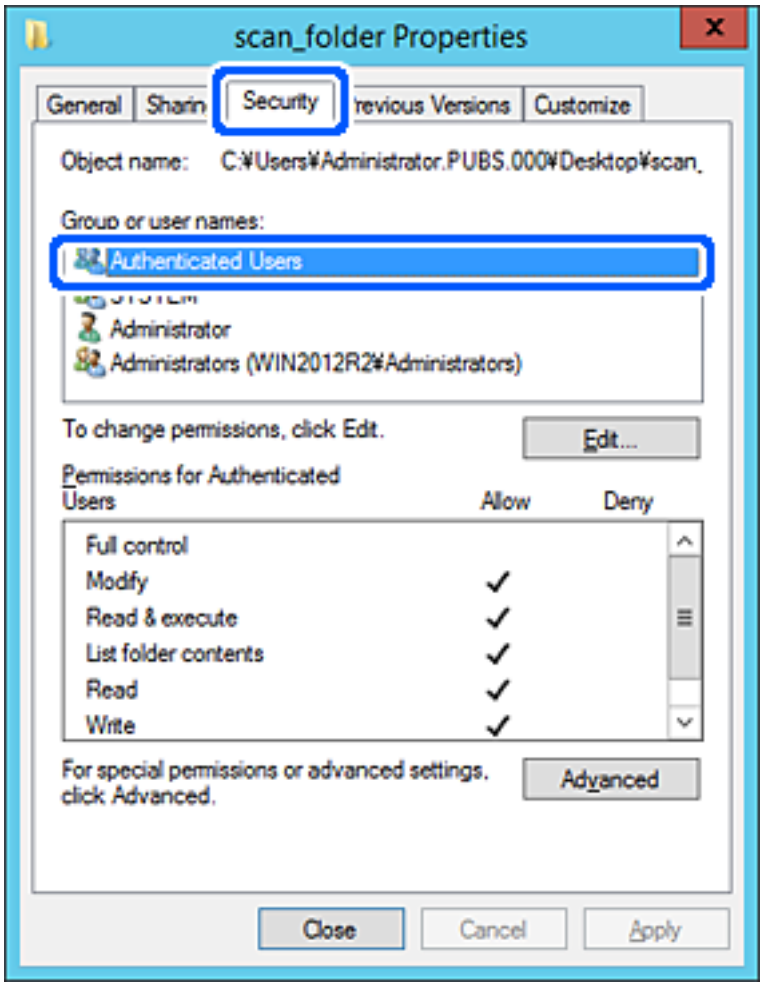

"Authenticated Users" is the special group that includes all users who can log in to the domain or computer. This group is displayed only when the folder is created just below the root folder.

If it is not displayed, you can add it by clicking **Edit**. For more details, see Related Information.

10. Check that **Allow** on **Modify** is selected in **Permissions for Authenticated Users**.

    If it is not selected, select **Authenticated Users**, click **Edit**, select **Allow** on **Modify** in **Permissions for Authenticated Users**, and then click **OK**.

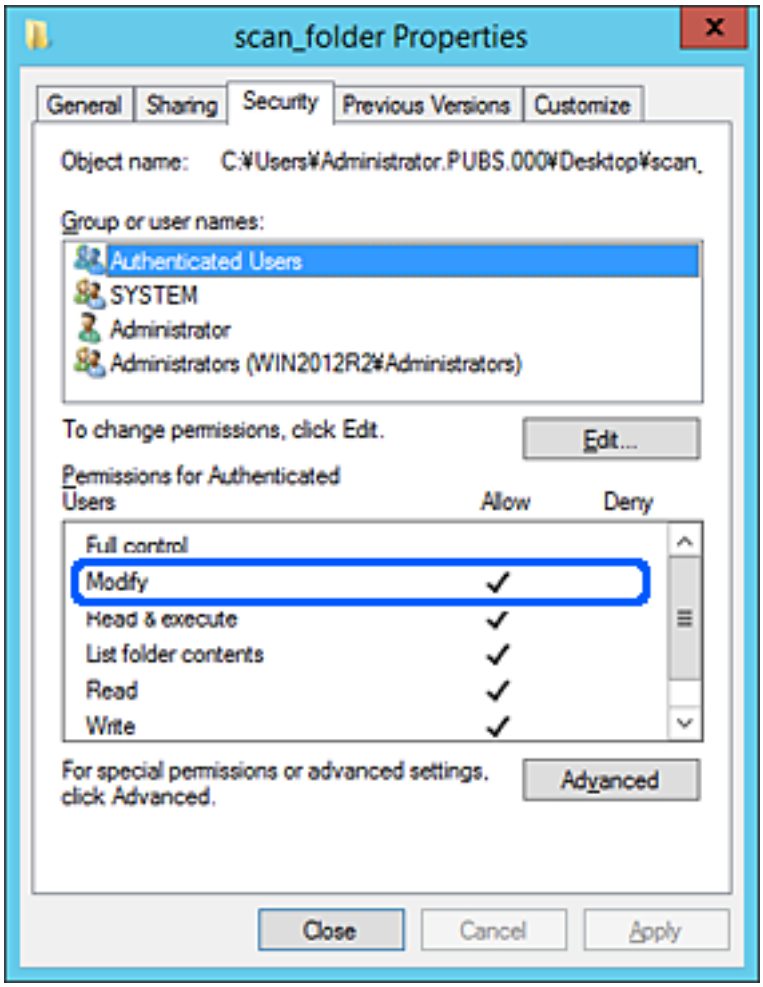

11. Select **Sharing** tab.

    The network path of the shared folder is displayed. This is used when registering to the contacts of the printer. Please write it down.

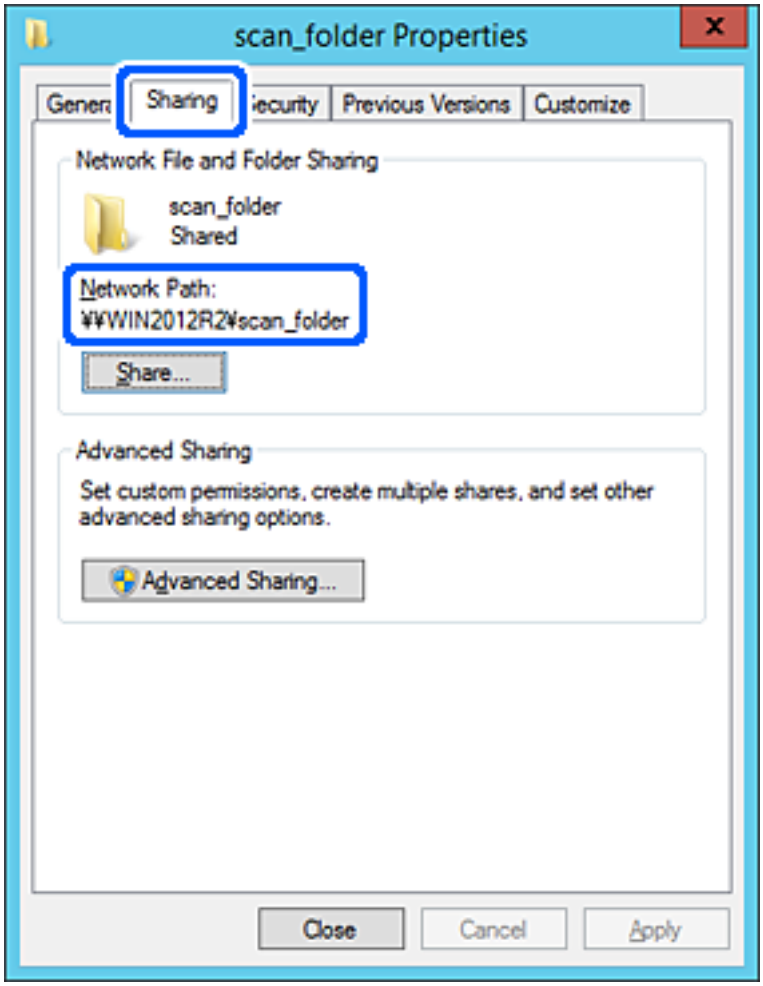

12. Click **OK** or **Close** to close the screen.

    Check whether the file can be written or read on the shared folder from the computers of the same domain.

Related Information

➡ "Adding Group or User Which Permits Access" on page 368

Example of Configuration for a Personal Computer

This explanation is an example for creating the shared folder on the desktop of the user currently logging in to the computer.

The user who logs in to the computer and who has administrator authority can access the desktop folder and the document folder that are under the User folder.

Set this configuration when you DO NOT permit reading and writing to another user to the shared folder on a personal computer.

❏ Place for creating shared folder: Desktop

❏ Folder path: C:\Users\xxxx\Desktop\scan_folder

❏ Access permission via network (Share Permissions): Everyone

❏ Access permission on file system (Security): do not add, or add User/Group names to permit access

1. Log in to the computer where the shared folder will be created by the administrator authority user account.

2. Start explorer.

3. Create the folder on the desktop, and then name it "scan_folder".

   For the folder name, enter between 1 and 12 alphanumeric characters. If the character limit of the folder name is exceeded, you may not be able to access it normally by the varied environment.

4. Right click the folder, and then select **Properties**.

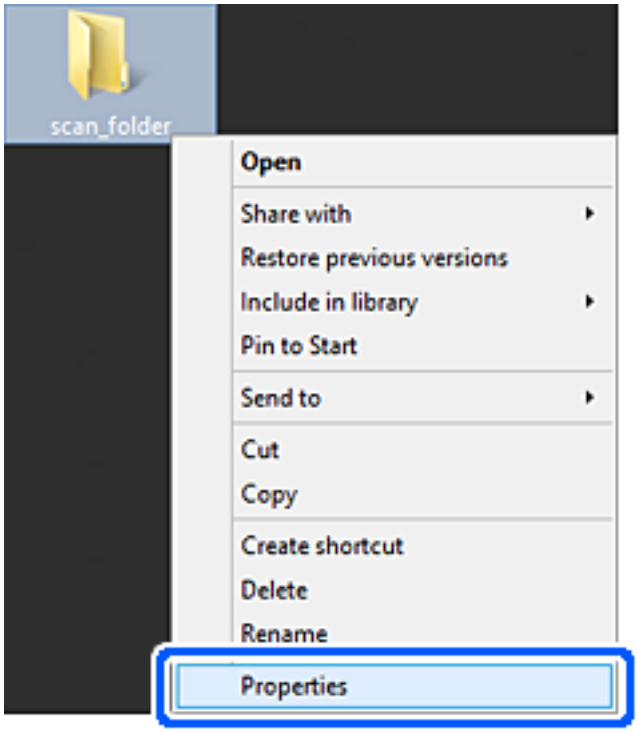

5. Click **Advanced Sharing** on the **Sharing** tab.

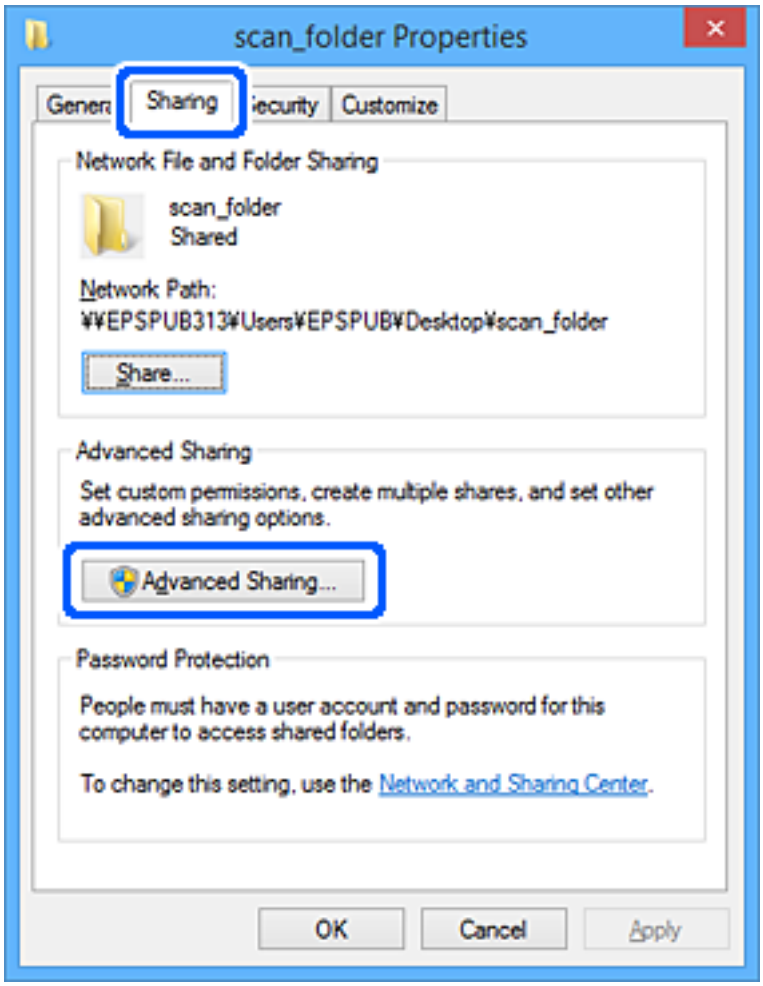

6. Select **Share this folder**, and then click **Permissions**.

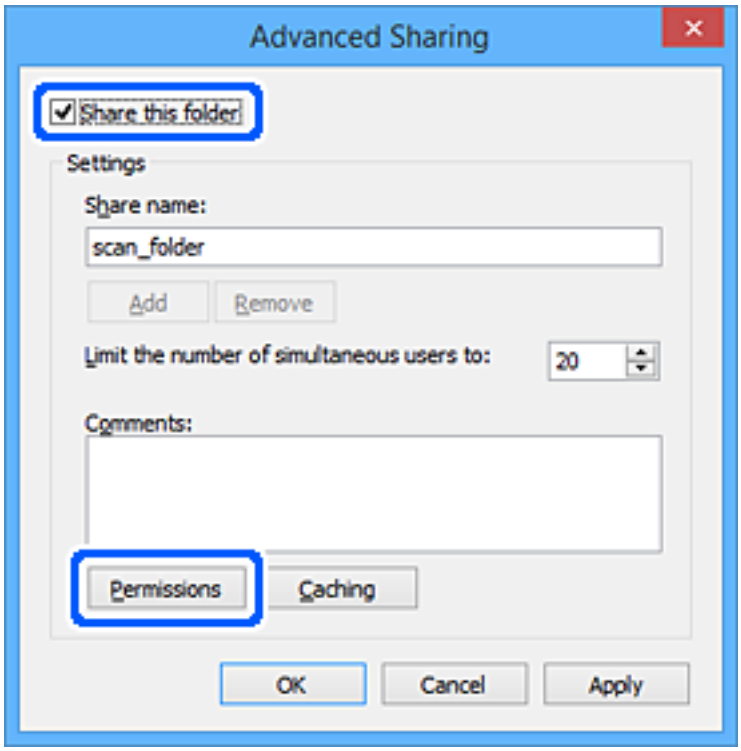

7. Select **Everyone** group of **Group or user names**, select **Allow** on **Change**, and then click **OK**.

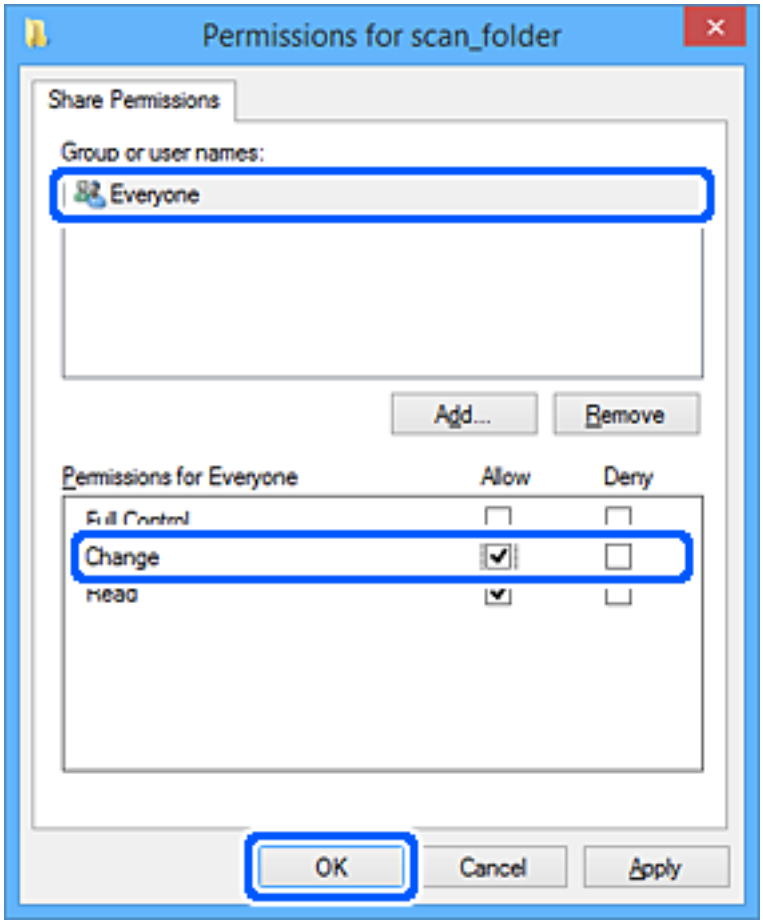

8. Click **OK**.

9. Select **Security** tab.

10. Check the group or the user in the **Group or user names**.

    The group or the user that is displayed here can access the shared folder.

    In this case, the user who logs in to this computer and the Administrator can access the shared folder.

    Add access permission, if necessary. You can add it by clicking **Edit**. For more details, see Related Information.

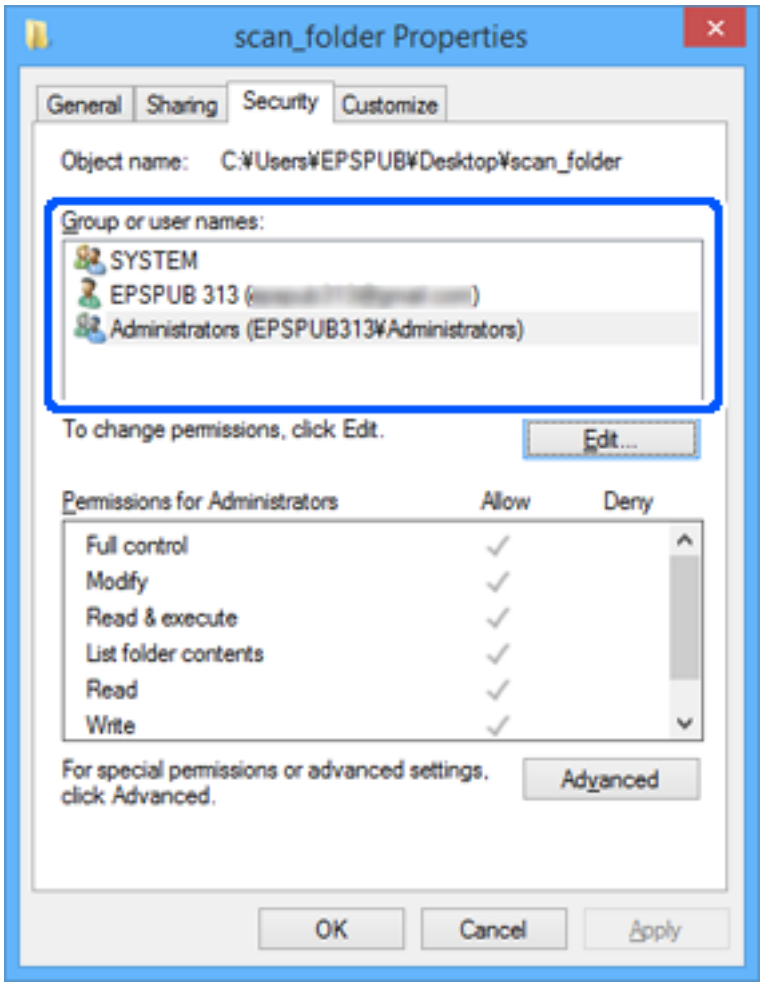

11. Select **Sharing** tab.

    The network path of the shared folder is displayed. This is used when registering to the printer's contact. Please write it down.

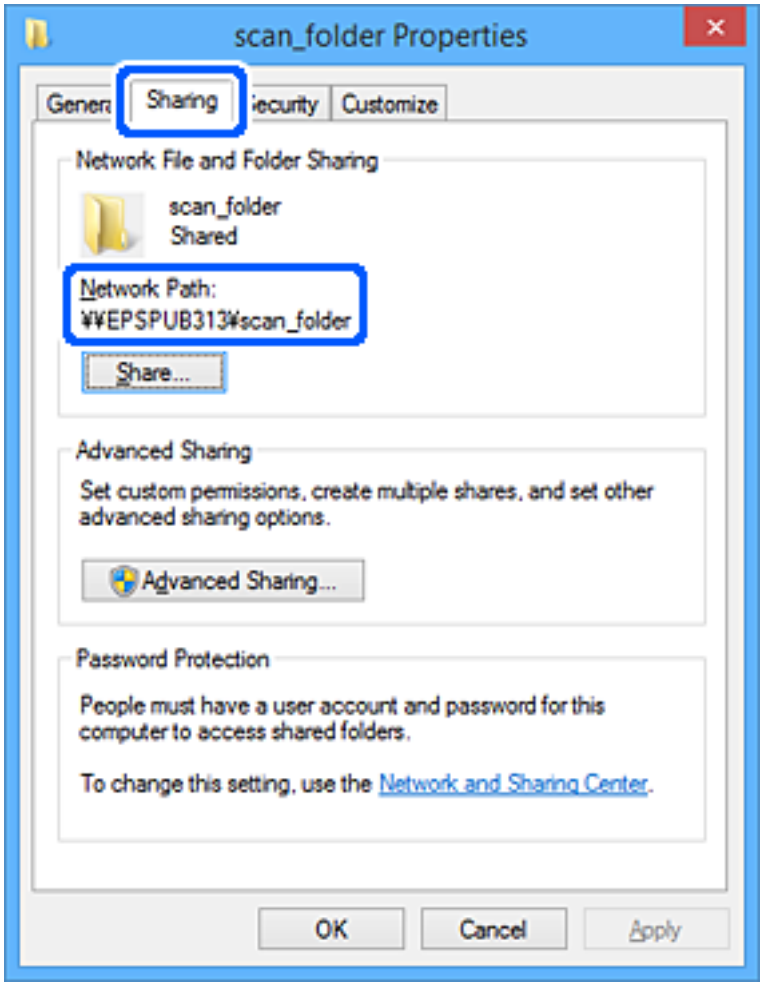

12. Click **OK** or **Close** to close the screen.

    Check whether the file can be written or read on the shared folder from the computers of users or groups with access permission.

Related Information

➡ "Adding Group or User Which Permits Access" on page 368

Adding Group or User Which Permits Access

You can add the group or user which permits access.

1. Right click the folder and select **Properties**.

2. Select **Security** tab.

3. Click **Edit**.

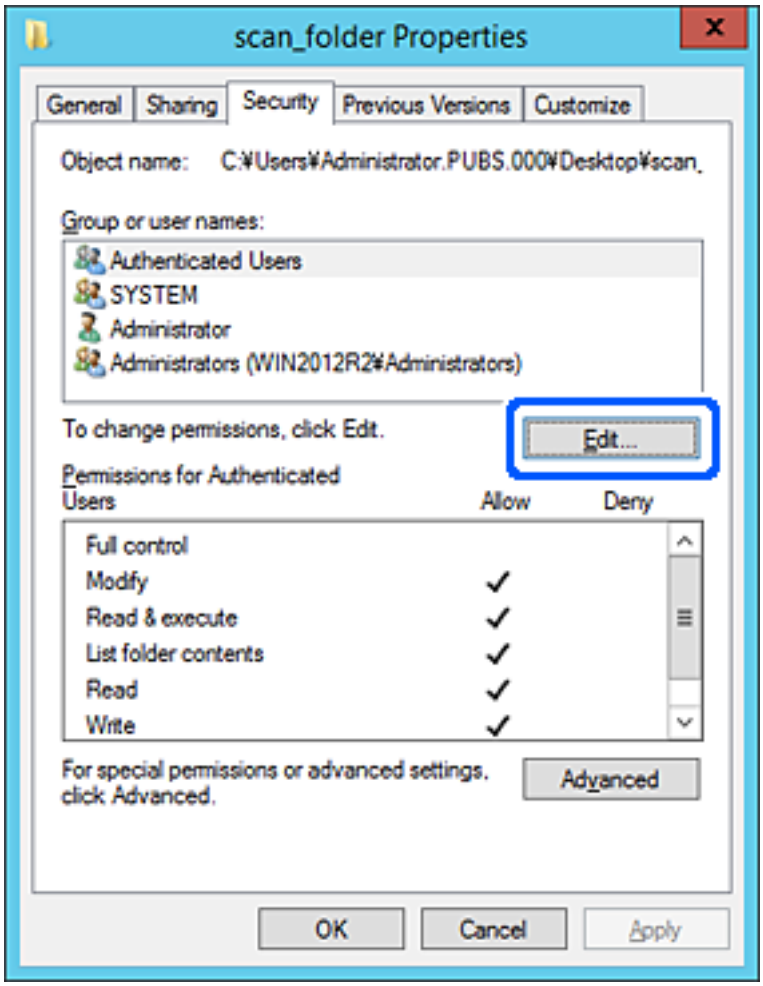
scan_folder Properties
General
Sharing
Security
Previous Versions
Customize
Object name: C:¥Users¥Administrator.PUBS.000¥Desktop¥scan_
Group or user names:
Authenticated Users
SYSTEM
Administrator
Administrators (WIN2012R2¥Administrators)
To change permissions, click Edit.
Edit...
Permissions for Authenticated Users
Allow
Deny
Full control
Modify
Read & execute
List folder contents
Read
Write
For special permissions or advanced settings, click Advanced.
Advanced
OK
Cancel
Apply

4. Click **Add** under the **Group or user names**.

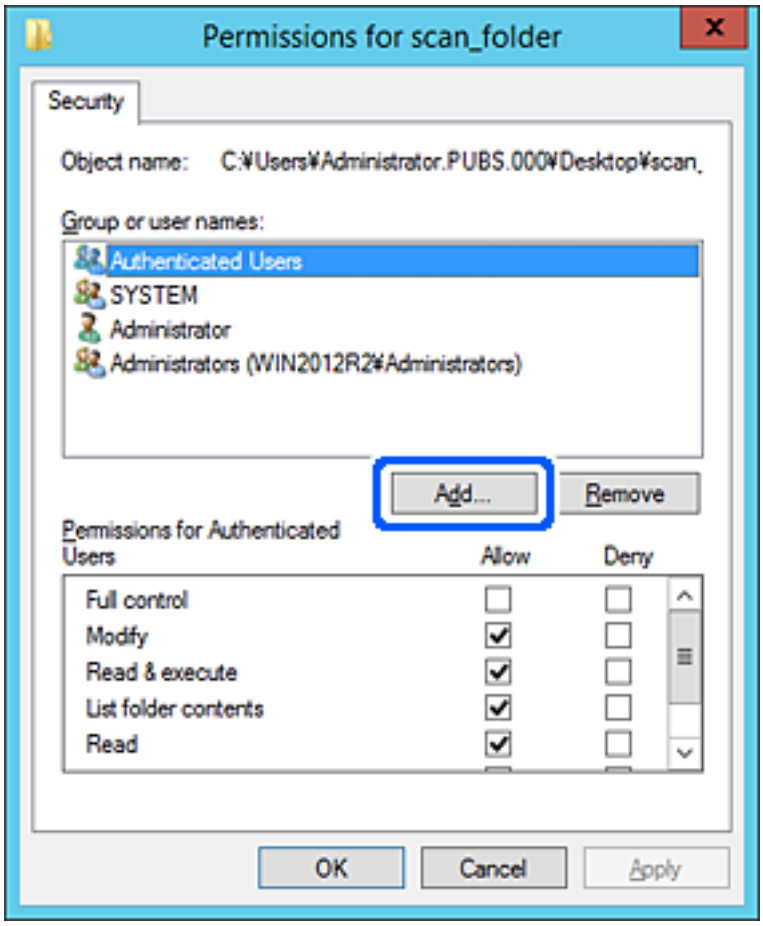

5. Enter the group or user name that you want to permit access, and then click **Check Names**.

   An underline is added to the name.

   Note:
   If you do not know the full name of the group or user, enter part of the name, and then click ***Check Names****. The group names or user names that match part of the name are listed, and then you can select the full name from the list.*

   If just one name matches, the full name with underlining is displayed in ***Enter the object name to select****.*

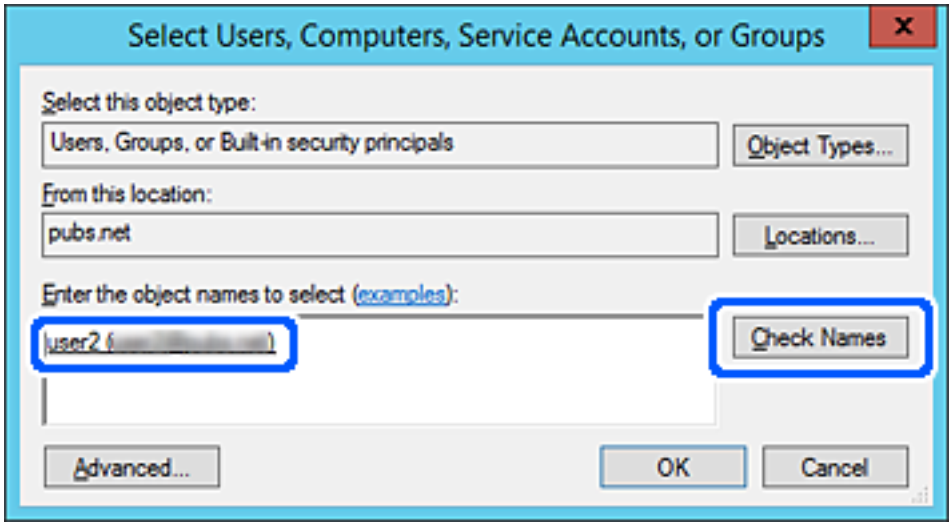

6. Click **OK**.

7. On the Permission screen, select the user name that is entered in **Group or user names** , select the access permission on **Modify**, and then click **OK**.

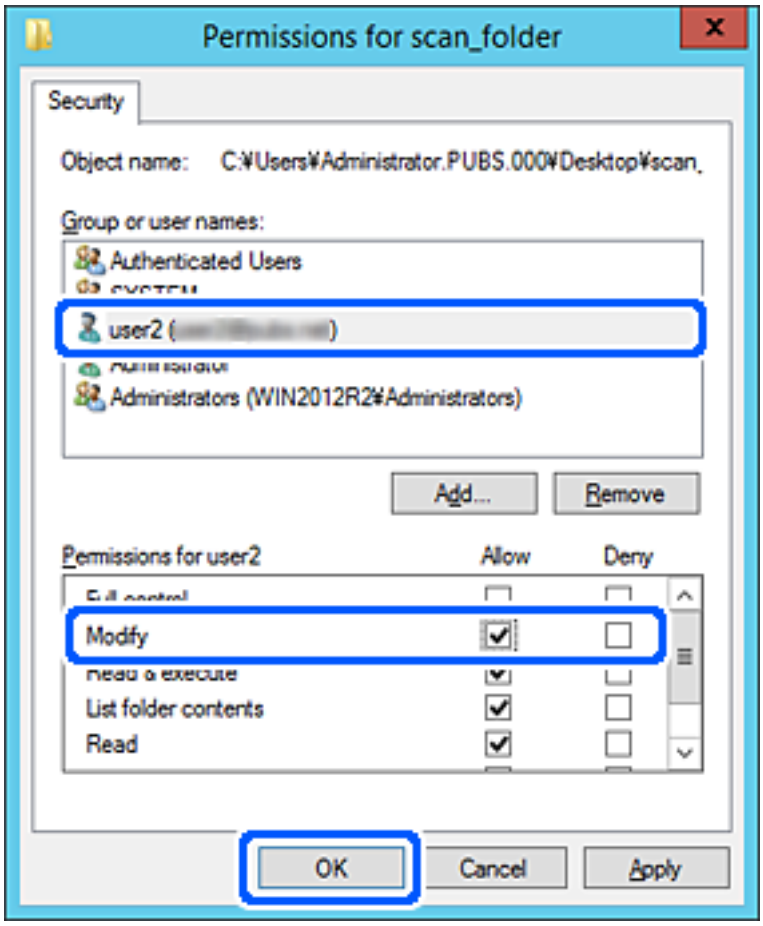

8. Click **OK** or **Close** to close the screen.

   Check whether the file can be written or read on the shared folder from the computers of users or groups with access permission.

Using Microsoft Network Sharing

When enabling it, the following are possible.

❏ Shares the USB storage over the network that is connected to the printer.

❏ Forwards the scan result or receiving fax to the shared folder on the computer.

1. Access Web Config and select the **Network** tab > **MS Network**.

2. Select **Use Microsoft network sharing**.

3. Set each item.

4. Click **Next**.

5. Confirm the settings, and then click **OK**.

6. Enter the following on the computer's explorer, and then press the Enter key.

   Check whether there is a network folder and that you can access it.

   \\Printer's IP address

   Example : \\192.0.2.111

Related Information

➡ "Running Web Config on a Web Browser" on page 299

MS Network Setting items

Items	Explanation
Use Microsoft network sharing	Select when enabling MS Network sharing.
SMB1.0 SMB2/SMB3	Enable the protocol you want to use. You can only enable SMB1.0 or SMB2/SMB3.
File Sharing	Select whether to enable file sharing or not. Enable it for the following situations. ❏ Shares the USB storage over the network that is connected to the printer. ❏ Forwards the scan result or receiving fax to the shared folder on the computer.
User Authentication	Select whether to perform user authentication or not when accessing USB storage on the network that is connected to the printer.
User Name	Set the user name for user authentication. Enter between 1 and 127 characters in ASCII except "/\[]:;|=,+*?<>@%. However, you cannot enter a single period or a combination of the period "." and a space alone.
Password	Set the password for user authentication. Enter between 1 and 64 characters in ASCII. However, you cannot just set 10 asterisks "*".
Encrypted Communication	Set whether to enable encrypted communication or not. You can select it when **Enable** is selected on **User Authentication**.
Host Name	Display the MS Network host name of the printer. To change this, select the **Network** tab > **Basic**, and then change the **Device Name**.
Workgroup Name	Enter the work group name of MS Network. Enter between 0 and 15 characters in ASCII.
Access Attribute	Set the Access Attribute of file sharing.
Shared Name(USB Host)	Display as the shared name when sharing the file.

Making Contacts Available

Registering destinations in the printer's contacts list allows you to easily enter the destination when scanning or sending faxes.

You can also use the LDAP server (LDAP search) to enter the destination.

Note:
- *You can switch between your printer's contacts list and the LDAP using the printer's control panel.*
- *You can register the following types of destinations in the contacts list. You can register up to 200 entries in total.*

Fax	Destination for fax
Email	Destination for email You need to configure the email server settings beforehand.
Network Folder (SMB)	Destination for scan data and fax forwarding data
Network Folder/FTP	

Contacts Configuration Comparison

There are three tools for configuring the printer's contacts: Web Config, Epson Device Admin, and the printer's control panel. The differences between three tools are listed in the table below.

Features	Web Config	Epson Device Admin	Printer's control panel
Registering a destination	✓	✓	✓
Editing a destination	✓	✓	✓
Adding a group	✓	✓	✓
Editing a group	✓	✓	✓
Deleting a destination or groups	✓	✓	✓
Deleting all destinations	✓	✓	–
Importing a file	✓	✓	–
Exporting to a file	✓	✓	–
Assigning destinations to frequent use	✓	✓	✓
Sorting destinations assigned to frequent use	–	–	✓

Note:
You can also configure the fax destination using the FAX Utility.

Registering a Destination to Contacts using Web Config

Note:
You can also register the contacts on the printer's control panel.

1. Access Web Config and select the **Scan/Copy** or **Fax** tab > **Contacts**.

2. Select the number that you want to register, and then click **Edit**.

3. Enter **Name** and **Index Word**.

4. Select the destination type as the **Type** option.

   Note:
   *You cannot change the **Type** option after registration is complete. If you want to change the type, delete the destination and then register again.*

5. Enter a value for each item, and then click **Apply**.

Related Information

➡ "Running Web Config on a Web Browser" on page 299

Destination Setting Items

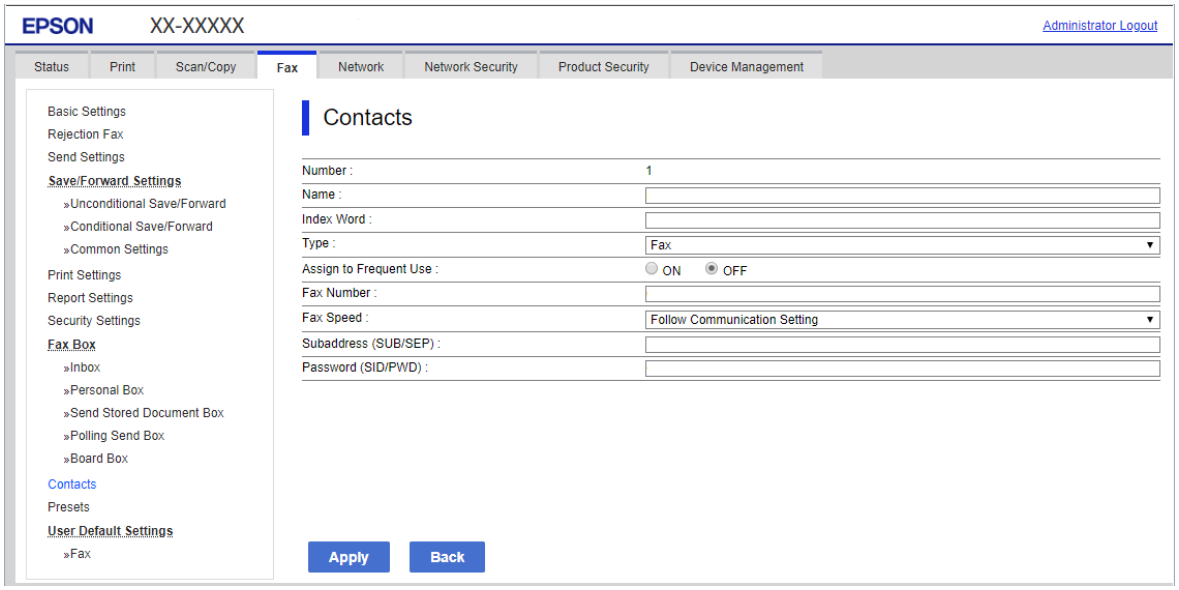

Items	Settings and Explanation
Common Settings	
Name	Enter a name displayed in the contacts in 30 characters or less in Unicode (UTF-8). If you do not specify this, leave it blank.
Index Word	Enter words to search in 30 characters or less in Unicode (UTF-8). If you do not specify this, leave it blank.
Type	Select the type of the address that you want to register.
Assign to Frequent Use	Select to set the registered address as a frequently used address. When setting as a frequently used address, it is displayed on the top screen of fax and scan, and you can specify the destination without displaying the contacts.
Fax	
Fax Number	Enter between 1 and 64 characters using 0-9 - * # and space.
Fax Speed	Select a communication speed for a destination.

Items	Settings and Explanation
Subaddress (SUB/SEP)	Set the sub address that is appended when fax is sent. Enter within 20 characters or less using 0-9, *, # or spaces. If you do not specify this, leave it blank.
Password (SID/PWD)	Set the password for the sub address. Enter within 20 characters or less using 0-9, *, # or spaces. If you do not specify this, leave it blank.
Email	
Email Address	Enter between 1 and 255 characters using A-Z a-z 0-9 ! # $ % & ' * + - . / = ? ^ _ { | } ~ @.
Network Folder (SMB)	
Save to	\\"Folder path" Enter the location where the target folder is located between 1 and 253 characters in Unicode (UTF-8), omitting "\\".
User Name	Enter a user name to access a network folder in 30 characters or less in Unicode (UTF-8). However, avoid using control characters (0x00 to 0x1f, 0x7F).
Password	Enter a password to access a network folder in 20 characters or less in Unicode (UTF-8). However, avoid using control characters (0x00 to 0x1f, 0x7F).
FTP	
Save to	Enter the server name between 1 and 253 characters in ASCII (0x20-0x7E), omitting "ftp://".
User Name	Enter a user name to access an FTP server in 30 characters or less in Unicode (UTF-8). However, avoid using control characters (0x00 to 0x1f, 0x7F). If the server allows anonymous connections, enter a user name such as Anonymous and FTP. If you do not specify this, leave it blank.
Password	Enter a password to access to an FTP server within 20 characters or less in Unicode (UTF-8). However, avoid using control characters (0x00 to 0x1f, 0x7F). If you do not specify this, leave it blank.
Connection Mode	Select the connection mode from the menu. If a firewall is set between the printer and the FTP server, select **Passive Mode**.
Port Number	Enter the FTP server port number between 1 and 65535.

Registering Destinations as a Group Using Web Config

If the destination type is set to **Fax** or **Email**, you can register the destinations as a group.

1. Access Web Config and select the **Scan/Copy** or **Fax** tab > **Contacts**.
2. Select the number that you want to register, and then click **Edit**.
3. Select a group from **Type**.
4. Click **Select** for **Contact(s) for Group**.

   The available destinations are displayed.

5. Select the destination that you want to register to the group, and then click **Select**.

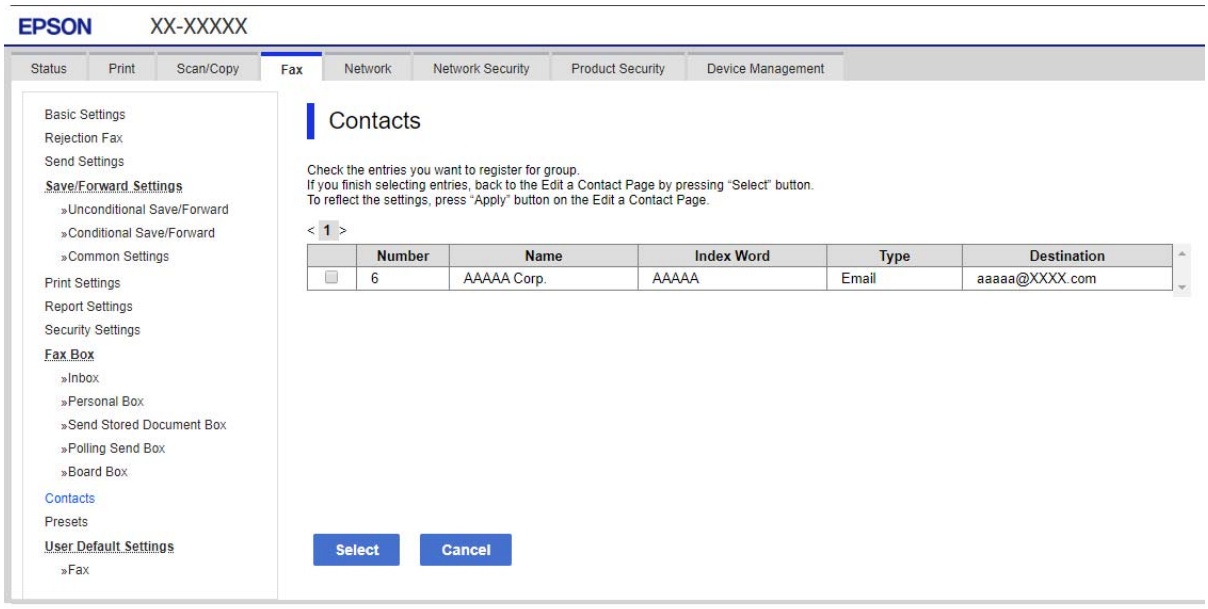

6. Enter a **Name** and **Index Word**.

7. Select whether or not you assign the registered group to the frequently used group.

   Note:
   Destinations can be registered to multiple groups.

8. Click **Apply**.

Related Information

➡ "Running Web Config on a Web Browser" on page 299

Registering Frequently Used Contacts

When you register frequently used contacts, the contacts are displayed at the top of the screen where you specify the address.

1. Select **Settings** on the home screen.

2. Select **Contacts Manager**, and then select **Frequent**.

3. Select the type of contact you want to register.

4. Select **Edit**.

   Note:
   *To edit the order of the contacts, select **Sort**.*

5. Select frequently used contacts that you want to register, and then select **OK**.

   Note:
   - ❏ *To deselect a contact, tap it again.*
   - ❏ *You can search for addresses from the contacts list. Enter the search keyword into the box on the top of the screen.*

6. Select **Close**.

Backing Up and Importing Contacts

Using Web Config or other tools, you can back up and import contacts.

For Web Config, you can back up contacts by exporting the printer settings that include contacts. The exported file cannot be edited because it is exported as a binary file.

When importing the printer settings to the printer, contacts are overwritten.

For Epson Device Admin, only contacts can be exported from the device's property screen. Also, if you do not export the security-related items, you can edit the exported contacts and import them because this can be saved as a SYLK file or csv file.

Importing Contacts Using Web Config

If you have a printer that allows you to backup contacts and is compatible with this printer, you can register contacts easily by importing the backup file.

Note:
For instructions on how to back up the printer contacts, see the manual provided with the printer.

Follow the steps below to import the contacts to this printer.

1. Access Web Config, select **Device Management** > **Export and Import Setting Value** > **Import**.

2. Select the backup file you created in **File**, enter the password, and then click **Next**.

3. Select the **Contacts** checkbox, and then click **Next**.

Related Information

➡ "Running Web Config on a Web Browser" on page 299

Backing up Contacts Using Web Config

Contacts data may be lost due to a printer malfunction. We recommend that you make a backup of the data whenever you update the data. Epson shall not be responsible for the loss of any data, for backing up or recovering data and/or settings even during a warranty period.

Using Web Config, you can back up the contact data stored in the printer to the computer.

1. Access Web Config, and then select the **Device Management** tab > **Export and Import Setting Value** > **Export**.

2. Select one of the **Contacts** checkboxes.

   For example, if you select **Contacts** under the **Scan/Copy** category, the same checkbox under the Fax category is also selected.

3. Enter a password to encrypt the exported file.

   You need the password to import the file. Leave this blank if you do not want to encrypt the file.

4. Click **Export**.

Related Information

➡ "Running Web Config on a Web Browser" on page 299

Export and Bulk Registration of Contacts Using Tool

If you use Epson Device Admin, you can back up just the contacts and edit the exported files, then register them all at once.

It is useful if you want to back up only the contacts or when you replace the printer and you want to transfer the contacts from the old one to new one.

Exporting Contacts

Save the contacts information to the file.

You can edit files saved in SYLK format or csv format by using a spreadsheet application or text editor. You can register all at once after deleting or adding the information.

Information that includes security items such as password and personal information can be saved in binary format with a password. You cannot edit the file. This can be used as the backup file of the information including the security items.

1. Start Epson Device Admin.

2. Select **Devices** on the side bar task menu.

3. Select the device you want to configure from the device list.

4. Click **Device Configuration** on the **Home** tab on the ribbon menu.

   When the administrator password has been set, enter the password and click **OK**.

5. Click **Common** > **Contacts**.

6. Select the export format from **Export** > **Export items**.

   ❏ All Items

   Export the encrypted binary file. Select when you want to include the security items such as password and personal information. You cannot edit the file. If you select it, you have to set the password. Click **Configuration** and set a password between 8 and 63 characters long in ASCII. This password is required when importing the binary file.

❏ Items except Security Information

Export the SYLK format or csv format files. Select when you want to edit the information of the exported file.

7. Click **Export**.

8. Specify the place to save the file, select the file type, and then click **Save**.

   The completion message is displayed.

9. Click **OK**.

   Check that the file is saved to the specified place.

Importing Contacts

Import the contacts information from the file.

You can import the files saved in SYLK format or csv format or the backed-up binary file that includes the security items.

1. Start Epson Device Admin.

2. Select **Devices** on the side bar task menu.

3. Select the device you want to configure from the device list.

4. Click **Device Configuration** on the **Home** tab on the ribbon menu.

   When the administrator password has been set, enter the password and click **OK**.

5. Click **Common** > **Contacts**.

6. Click **Browse** on **Import**.

7. Select the file you want to import and then click **Open**.

   When you select the binary file, in **Password** enter the password you set when exporting the file.

8. Click **Import**.

   The confirmation screen is displayed.

9. Click **OK**.

   The validation result is displayed.

   ❏ Edit the information read

   Click when you want to edit the information individually.

   ❏ Read more file

   Click when you want to import multiple files.

10. Click **Import**, and then click **OK** on the import completion screen.

    Return to the device's property screen.

11. Click **Transmit**.

12. Click **OK** on the confirmation message.

    The settings are sent to the printer.

13. On the sending completion screen, click **OK**.

    The printer's information is updated.

    Open the contacts from Web Config or printer's control panel, and then check that the contact is updated.

Cooperation between the LDAP Server and Users

When cooperating with the LDAP server, you can use the address information registered to the LDAP server as the destination of an email or fax.

Configuring the LDAP Server

To use the LDAP server information, register it on the printer.

1. Access the Web Config and select the **Network** tab > **LDAP Server** > **Basic**.

2. Enter a value for each item.

3. Select **OK**.

   The settings you have selected are displayed.

Related Information

➡ "Running Web Config on a Web Browser" on page 299

LDAP Server Setting Items

Items	Settings and Explanation
Use LDAP Server	Select **Use** or **Do Not Use**.
LDAP Server Address	Enter the address of the LDAP server. Enter between 1 and 255 characters of either IPv4, IPv6, or FQDN format. For the FQDN format, you can use alphanumeric characters in ASCII (0x20-0x7E) and "- " except for the beginning and end of the address.
LDAP server Port Number	Enter the LDAP server port number between 1 and 65535.
Secure Connection	Specify the authentication method when the printer accesses the LDAP server.
Certificate Validation	When this is enabled, the certificate of the LDAP sever is validated. We recommend this is set to **Enable**. To set up, the **CA Certificate** needs to be imported to the printer.
Search Timeout (sec)	Set the length of time for searching before timeout occurs between 5 and 300.

Items	Settings and Explanation
Authentication Method	Select one of the methods. If you select **Kerberos Authentication**, select **Kerberos Settings** to make settings for Kerberos. To perform Kerberos Authentication, the following environment is required. ❏ The printer and the DNS server can communicate. ❏ The time of the printer, KDC server, and the server that is required for authentication (LDAP server, SMTP server, File server) are synchronized. ❏ When the service server is assigned as the IP address, the FQDN of the service server is registered on the DNS server reverse lookup zone.
Kerberos Realm to be Used	If you select **Kerberos Authentication** for **Authentication Method**, select the Kerberos realm that you want to use.
Administrator DN / User Name	Enter the user name for the LDAP server in 128 characters or less in Unicode (UTF-8). You cannot use control characters, such as 0x00-0x1F and 0X7F. This setting is not used when **Anonymous Authentication** is selected as the **Authentication Method**. If you do not specify this, leave it blank.
Password	Enter the password for the LDAP server authentication in 128 characters or less in Unicode (UTF-8). You cannot use control characters, such as 0x00-0x1F and 0X7F. This setting is not used when **Anonymous Authentication** is selected as the **Authentication Method**. If you do not specify this, leave it blank.

Kerberos Settings

If you select **Kerberos Authentication** for **Authentication Method** of **LDAP Server** > **Basic**, make the following Kerberos settings from the **Network** tab > **Kerberos Settings**. You can register up to 10 settings for the Kerberos settings.

Items	Settings and Explanation
Realm (Domain)	Enter the realm of the Kerberos authentication in 255 characters or less in ASCII (0x20-0x7E). If you do not register this, leave it blank.
KDC Address	Enter the address of the Kerberos authentication server. Enter 255 characters or less in either IPv4, IPv6 or FQDN format. If you do not register this, leave it blank.
Port Number (Kerberos)	Enter the Kerberos server port number between 1 and 65535.

Configuring the LDAP Server Search Settings

When you set up the search settings, you can use the email address and fax number registered to the LDAP server.

1. Access Web Config and select the **Network** tab > **LDAP Server** > **Search Settings**.
2. Enter a value for each item.
3. Click **OK** to display the setting result.

   The settings you have selected are displayed.

Related Information

➡ "Running Web Config on a Web Browser" on page 299

LDAP Server Search Setting Items

Items	Settings and Explanation
Search Base (Distinguished Name)	If you want to search an arbitrary domain, specify the domain name of the LDAP server. Enter between 0 and 128 characters in Unicode (UTF-8). If you do not search for arbitrary attribute, leave this blank. Example for the local server directory: dc=server,dc=local
Number of search entries	Specify the number of search entries between 5 and 500. The specified number of the search entries is saved and displayed temporarily. Even if the number of the search entries is over the specified number and an error message appears, the search can be completed.
User name Attribute	Specify the attribute name to display when searching for user names. Enter between 1 and 255 characters in Unicode (UTF-8). The first character should be a-z or A-Z. Example: cn, uid
User name Display Attribute	Specify the attribute name to display as the user name. Enter between 0 and 255 characters in Unicode (UTF-8). The first character should be a-z or A-Z. Example: cn, sn
Fax Number Attribute	Specify the attribute name to display when searching for fax numbers. Enter a combination of between 1 and 255 characters using A-Z, a-z, 0-9, and -. The first character should be a-z or A-Z. Example: facsimileTelephoneNumber
Email Address Attribute	Specify the attribute name to display when searching for email addresses. Enter a combination of between 1 and 255 characters using A-Z, a-z, 0-9, and -. The first character should be a-z or A-Z. Example: mail
Arbitrary Attribute 1 - Arbitrary Attribute 4	You can specify other arbitrary attributes to search for. Enter between 0 and 255 characters in Unicode (UTF-8). The first character should be a-z or A-Z. If you do not want to search for arbitrary attributes, leave this blank. Example: o, ou

Checking the LDAP Server Connection

Performs the connection test to the LDAP server by using the parameter set on **LDAP Server** > **Search Settings**.

1. Access Web Config and select the **Network** tab > **LDAP Server** > **Connection Test**.
2. Select **Start**.

   The connection test is started. After the test, the check report is displayed.

Related Information

➡ "Running Web Config on a Web Browser" on page 299

LDAP Server Connection Test References

Messages	Explanation
Connection test was successful.	This message appears when the connection with the server is successful.
Connection test failed. Check the settings.	This message appears for the following reasons: ❏ The LDAP server address or the port number is incorrect. ❏ A timeout has occurred. ❏ **Do Not Use** is selected as the **Use LDAP Server**. ❏ If **Kerberos Authentication** is selected as the **Authentication Method**, settings such as **Realm (Domain)**, **KDC Address** and **Port Number (Kerberos)** are incorrect.
Connection test failed. Check the date and time on your product or server.	This message appears when the connection fails because the time settings for the printer and the LDAP server are mismatched.
Authentication failed. Check the settings.	This message appears for the following reasons: ❏ **User Name** and/or **Password** is incorrect. ❏ If **Kerberos Authentication** is selected as the **Authentication Method**, the time/date may not be configured.
Cannot access the printer until processing is complete.	This message appears when the printer is busy.

Preparing to Scan

Scanning using the control panel

The scan to network folder function and the scan to mail function using the printer's control panel, as well as the transfer of scan results to mail, folders, etc. are performed by executing a job from the computer.

Settings of Servers and Folders

Name	Settings	Location	Requirement
Scan to Network Folder (SMB)	Create and set up sharing of the save folder	A computer that has a save folder location	The administrative user account to the computer that creates save folders.
	Destination for Scan to Network Folder (SMB)	Contacts of the device	User name and password to log on to the computer that has the save folder, and the privilege to update the save folder.
Scan to Network Folder (FTP)	Setup for FTP server log on	Contacts of the device	Logon information for the FTP server and the privilege to update the save folder.

Name	Settings	Location	Requirement
Scan to Email	Setup for email server	Device	Setup information for email server
Scan to Cloud	Printer registration to Epson Connect	Device	Internet connection environment
	Contact registration to Epson Connect	Epson Connect service	User and printer registration to Epson Connect

Related Information

➡ "Setting a Shared Network Folder" on page 356
➡ "Configuring a Mail Server" on page 352

Scanning From a Computer

Install the software and check that the network scan service is enabled to scan via a network from the computer.

Software to be installed

❏ Epson ScanSmart

❏ Epson Scan 2 (application required to use the scanner feature)

Confirming that Network Scan is Enabled

You can set the network scan service when you scan from a client computer over the network. The default setting is enabled.

1. Access Web Config and select the **Scan/Copy** tab > **Network Scan**.

2. Make sure that **Enable scanning** of **EPSON Scan** is selected.

   If it is selected, this task is completed. Close Web Config.

   If it is cleared, select it and go to next step.

3. Click **Next**.

4. Click **OK**.

   The network is re-connected, and then the settings are enabled.

Related Information

➡ "Running Web Config on a Web Browser" on page 299

Making Fax Features Available

Before Using Fax Features

Set up the following to use the fax features.

❏ Connect the printer correctly with the phone line and, if necessary, with a phone

❏ Complete the **Fax Setting Wizard**, which is required to make basic settings.

Set the following as necessary.

❏ Output destinations and related settings, such as network settings and mail server settings

❏ **Contacts** registration

❏ **User Settings** that define default values for **Fax** menu items

❏ **Report Settings** to print reports when faxes are sent, received, or forwarded

Related Information

➡ "Connecting the Printer to a Phone Line" on page 385
➡ "Making the Printer Ready to Send and Receive Faxes" on page 388
➡ "Making the Printer Ready to Send and Receive Faxes" on page 388
➡ "Fax Settings" on page 308
➡ "Configuring a Mail Server" on page 352
➡ "Setting a Shared Network Folder" on page 356
➡ "Making Contacts Available" on page 372
➡ "Report Settings" on page 317

Connecting the Printer to a Phone Line

Compatible Telephone Lines

You can use the printer over standard analogue telephone lines (PSTN = Public Switched Telephone Network) and PBX (Private Branch Exchange) telephone systems.

You may not be able to use the printer with the following phone lines or systems.

❏ VoIP phone line such as DSL or fiber-optic digital service

❏ Digital phone line (ISDN)

❏ Some PBX telephone systems

❏ When adapters such as terminal adapters, VoIP adapters, splitters, or DSL router are connected between the telephone wall jack and the printer

Connecting the Printer to a Phone Line

Connect the printer to a telephone wall jack using an RJ-11 (6P2C) phone cable. When connecting a telephone to the printer, use a second RJ-11 (6P2C) phone cable.

Depending on the area, a phone cable may be included with the printer. If it is included, use that cable.

You may need to connect the phone cable to an adapter provided for your country or region.

Note:
Remove the cap from the EXT. port of the printer only when connecting your telephone to the printer. Do not remove the cap if you are not connecting your telephone.

In areas where lightning strikes occur frequently, we recommend that you use a surge protector.

Connecting to a Standard Phone Line (PSTN) or PBX

Connect a phone cable from the telephone wall jack or PBX port to the LINE port on the back of the printer.

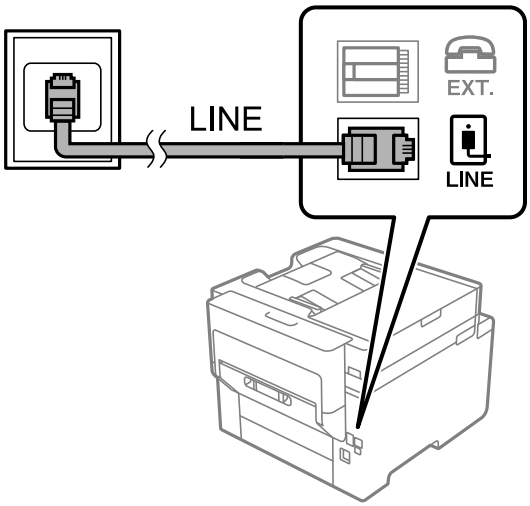

Connecting to DSL or ISDN

Connect a phone cable from the DSL modem or the ISDN terminal adapter to the LINE port on the back of the printer. See the documentation provided with the modem or the adapter for more details.

Note:
If your DSL modem is not equipped with a built-in DSL filter, connect a separate DSL filter.

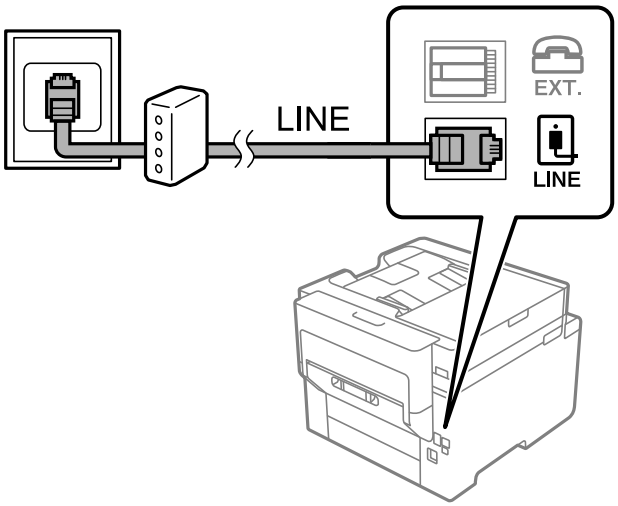

Connecting Your Phone Device to the Printer

When using the printer and your telephone on a single phone line, connect the telephone to the printer.

Note:

- ❏ *If your phone device has a fax function, disable the fax function before connecting. See the manuals that came with the phone device for details. Depending on the model of the phone device, the fax function cannot be completely disabled, so you may not be able to use it as an external phone.*
- ❏ *If you connect an answering machine, make sure the printer's* ***Rings to Answer*** *setting is set higher than the number of rings your answering machine is set to answer a call.*

1. Remove the cap from the EXT. port on the back of the printer.

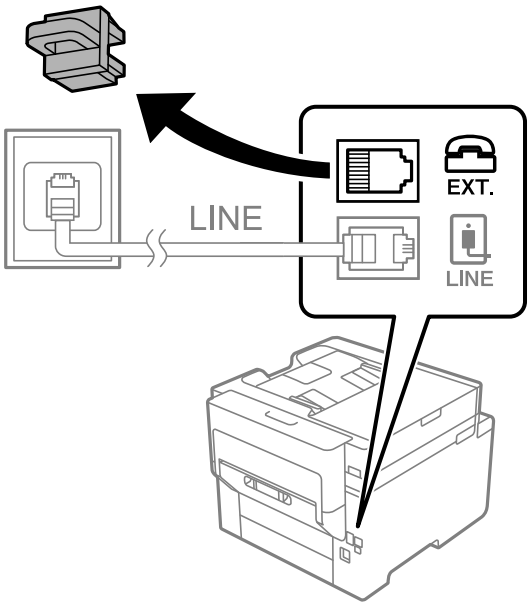

2. Connect the phone device and the EXT. port with a phone cable.

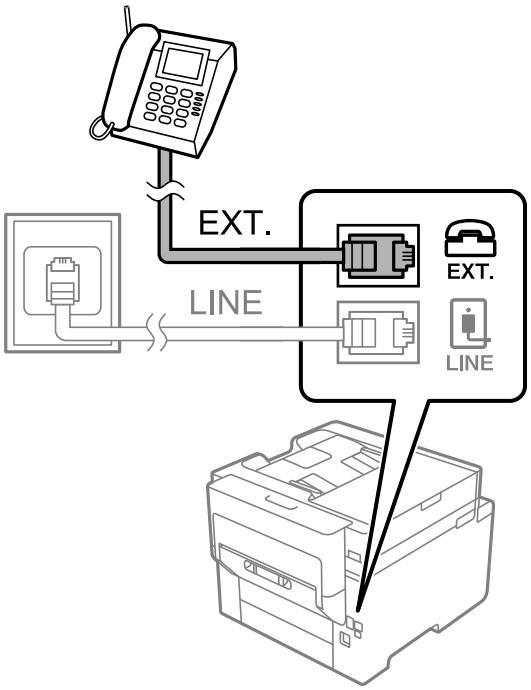

Note:
When sharing a single phone line, make sure you connect the phone device to the EXT. port of the printer. If you split the line to connect the phone device and the printer separately, the phone and the printer do not work correctly.

3. Select **Fax** on the printer's control panel.

4. Pick up the handset.

   If a message to start sending or receiving faxes is displayed as shown on the following screen, the connection has been established.

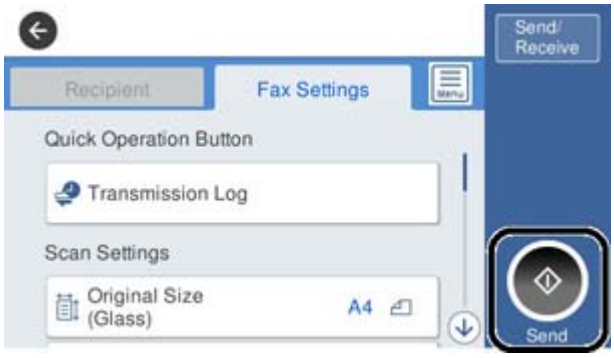

Related Information

➡ "Making the Printer Ready to Send and Receive Faxes" on page 388
➡ "Making Settings to Use an Answering Machine" on page 391
➡ "Making Settings to Receive Faxes Operating Only a Connected Phone" on page 391
➡ "Receive Mode:" on page 310

Making the Printer Ready to Send and Receive Faxes

Fax Setting Wizard configures the basic fax features to make the printer ready to send and receive faxes.

The Wizard is displayed automatically when the printer is turned on for the first time. You can also display the wizard manually from the printer's control panel. You need to run the wizard again in case the wizard is skipped when the printer is first turned on or when the connection environment has changed.

- ❏ The items below are what you can set through the wizard.
  - ❏ **Header** (**Your Phone Number** and **Fax Header**)
  - ❏ **Receive Mode** (**Auto** or **Manual**)
  - ❏ **Distinctive Ring Detection (DRD) Setting**
- ❏ The items below are set automatically according to the connection environment.
  - ❏ **Dial Mode** (such as **Tone** or **Pulse**)
- ❏ Other items in **Basic Settings** remain as they are.

Related Information

➡ "Basic Settings" on page 309

Making the Printer Ready to Send and Receive Faxes Using Fax Setting Wizard

1. Select **Settings** on the home screen on the printer's control panel, and then select **General Settings** > **Fax Settings** > **Fax Setting Wizard**.

2. Following the on-screen instructions, enter the sender name such as your company name, your fax number.

   Note:
   Your sender name and your fax number appear as the header for outgoing faxes.

3. Make the distinctive ring detection (DRD) setting.

   ❏ If you have subscribed to a distinctive ring service from your telephone company:

   Go to the next screen and select the ring pattern to be used for incoming faxes.

   When you tap any item except **All**, **Receive Mode** is set to **Auto** and you continue to the next screen where you can check the settings you made.

   ❏ If you have not subscribed to a distinctive ring service from your telephone company, or you do not need to set this option:

   Skip this setting and go to the screen where you can check the settings you made.

   Note:
   ❏ *Distinctive ring services, offered by many telephone companies (the service name differs by company), allows you to have several phone numbers on one phone line. Each number is assigned a different ring pattern. You can use one number for voice calls and another for fax calls. Select the ring pattern assigned to fax calls in **DRD**.*

   ❏ *Depending on the region, **On** and **Off** are displayed as the **DRD** options. Select **On** to use the distinctive ring feature.*

4. Make the Receive Mode setting.

   ❏ If you do not need to connect a phone device to the printer:

   Select **No**.

   Receive Mode is set to **Auto**.

   ❏ If you need to connect a phone device to the printer:

   Select **Yes**, and then select whether or not to receive faxes automatically.

5. Check the settings you made on the screen displayed, and then proceed to the next screen.

   To correct or change settings, tap .

6. Check the fax connection by selecting **Start Checking**, and then select **Print** to print a report that shows the connection status.

   Note:
   ❏ *If there are any errors reported, follow the instructions on the report to solve them.*

   ❏ *If the **Select Line Type** screen is displayed, select the line type.*

   *- When you are connecting the printer to a PBX phone system or terminal adapter, select **PBX**.*

   *- When you are connecting the printer to a standard phone line, select **PSTN**, and then select **Do Not Detect** on the **Confirmation** screen displayed. However, setting this to **Do Not Detect** may cause the printer to skip the first digit of a fax number when dialing and send the fax to the wrong number.*

Related Information

➡ "Connecting the Printer to a Phone Line" on page 385
➡ "Making Settings to Use an Answering Machine" on page 391

➡ "Receive Mode:" on page 310
➡ "Making Settings to Receive Faxes Operating Only a Connected Phone" on page 391
➡ "Basic Settings" on page 309

Making Settings for the Printer's Fax Features According to Use

You can configure the printer's fax features individually using the printer's control panel according to use. The settings made using **Fax Setting Wizard** can also be changed. For more details, see the descriptions of the **Fax Settings** menu.

Note:
❑ *Using Web Config, you can configure the printer's fax features.*

❑ *When you use Web Config to display the **Fax Settings** menu, there may be slight differences in the user interface and in location compared to the printer's control panel.*

Related Information

➡ "Fax Settings" on page 308
➡ "Making Settings for a PBX Phone System" on page 390
➡ "Making Settings When You Connect a Phone Device" on page 391
➡ "Making Settings to Save and Forward Received Faxes" on page 392
➡ "Receiving Incoming Faxes" on page 119
➡ "Making Settings to Save and Forward Received Faxes with Specific Conditions" on page 395
➡ "Making Settings for Blocking Junk Faxes" on page 399
➡ "Making Settings to Send and Receive Faxes on a Computer" on page 399

Making Settings for a PBX Phone System

Make the following settings when using the printer in offices that use extensions and require external access codes, such as 0 and 9, to get an outside line.

1. Select **Settings** on the printer's control panel.

2. Select **General Settings** > **Fax Settings** > **Basic Settings**.

3. Select **Line Type**, and then select **PBX**.

4. When sending a fax to an outside fax number using # (hash) instead of the actual external access code, select the **Access Code** box, and then select **Use**.

   The # entered instead of the actual access code, is replaced with the stored access code when dialing. Using # helps avoid connection problems when connecting to an outside line.

   Note:
   *You cannot send faxes to recipients in **Contacts** in which an external access code such as 0 or 9 is set.*

   *If you have registered recipients in **Contacts** using an external access code such as 0 or 9, set the **Access Code** to **Do Not Use**. Otherwise, you must change the code to # in **Contacts**.*

5. Tap the **Access Code** input box, enter the external access code used for your phone system, and then tap OK.

6. Select **OK** to apply the settings.

   The access code is stored in the printer.

Making Settings When You Connect a Phone Device

Making Settings to Use an Answering Machine

You need settings to use an answering machine.

1. Select **Settings** on the printer's control panel..
2. Select **General Settings** > **Fax Settings** > **Basic Settings**.
3. Set **Receive Mode** to **Auto**.
4. Set the **Rings to Answer** setting of the printer to a higher number than the number of rings for the answering machine.

   If **Rings to Answer** is set lower than the number of rings for the answering machine, the answering machine cannot receive voice calls to record voice messages. See the manuals that came with the answering machine for its settings.

The printer's **Rings to Answer** setting may not be displayed, depending on the region.

Related Information

➡ "Basic Settings" on page 309

Making Settings to Receive Faxes Operating Only a Connected Phone

You can start receiving incoming faxes by only picking up the handset and operating the phone, without operating the printer at all.

The **Remote Receive** feature is available for telephones that support tone dialing.

1. Select **Settings** on the printer's control panel.
2. Select **General Settings** > **Fax Settings** > **Basic Settings** > **Remote Receive**.
3. Tap **Remote Receive** to set this to **On**.
4. Select **Start Code**, enter a two digit code (you can enter 0 to 9, *, and #), and then tap **OK**.
5. Select **OK** to apply the settings.

Related Information

➡ "Basic Settings" on page 309

Making Settings to Save and Forward Received Faxes

The printer is set to print received faxes by default. Besides printing, you can set the printer to save and/or forward received faxes without conditions.

Note:

❑ *As well as using the printer's control panel, you can also make settings using Web Config.*

❑ *You can also save and/or forward received faxes with conditions.*

"Making Settings to Save and Forward Received Faxes with Specific Conditions" on page 395

Related Information

➡ "Making Saving Settings to Receive Faxes" on page 392

➡ "Making Forwarding Settings to Receive Faxes" on page 393

Making Saving Settings to Receive Faxes

You can make saving settings to receive faxes to the inbox and an external memory device regardless of the sender or time. Saving a fax to the inbox allows you to confirm the contents of the received fax by viewing the fax on the printer's LCD screen before the printer prints the fax.

To make settings to save received faxes to a computer using the PC-FAX feature, see " **Feature: PC-FAX Send/Receive (Windows/Mac OS)**" on page 108.

Note:

❑ *As well as using the printer's control panel, you can use Web Config to make saving settings to receive faxes. Select the **Fax** tab > **Save/Forward Settings** > **Unconditional Save/Forward**, and then make the saving destination settings in **Fax Output**.*

❑ *You can also print and/or forward the received faxes at the same time. Make the settings on the **Fax Output** screen mentioned above.*

1. Select **Settings** on the printer's control panel, and then select **General Settings** > **Fax Settings**.

2. Select **Receive Settings** > **Save/Forward Settings** > **Unconditional Save/Forward**.

   When a message is displayed, check the content, and then tap **OK**.

3. Make settings for the saving destinations, the inbox and/or an external memory device.

❑ To save received faxes to the Inbox:

❶ Select **Save to Inbox** to set this to **On**.

❷ If a message is displayed, check the content, and then select **OK**.

❑ To save received faxes to an external memory device:

❶ Insert a memory device into the printer's external interface USB port.

❷ Select **Save to Memory Device**.

❸ Select **Yes**. To print the documents automatically while saving them in the memory device, select **Yes and Print** instead.

❹ Check the message that is displayed, and then tap **Create**.

A folder for saving received documents is created in the memory device.

❺ Check the message, tap **Close** or wait until the message is cleared, and then tap **Close**.

❻ When the next message is displayed, check it, and then tap **OK**.

> ***Important:***
> *Received documents are saved in the printer's memory temporarily before the documents are saved in the memory device connected to the printer. Because a memory full error disables sending and receiving faxes, keep the memory device connected to the printer.*

Note:
*You can set the printer to send emails to people you want to notify about the results of saving faxes, when saving is complete. As necessary, select **Email Notifications**, set the processes, and then set the destination to which you want to send notifications.*

4. Select **Close** to complete the **Unconditional Save/Forward** Settings.

This completes making unconditional saving settings to receive faxes. You can set **Common Settings** as necessary. For details, see the explanation for **Common Settings** in the **Save/Forward Settings** menu.

Note:
If you want to save received faxes with conditions, see the related information link below.

Related Information

➡ "Save/Forward Settings" on page 312
➡ "Viewing Received Faxes on the Printer's LCD Screen" on page 123
➡ "Making Saving Settings to Receive Faxes with Specific Conditions" on page 395

Making Forwarding Settings to Receive Faxes

You can make forwarding settings to up to five destinations, email addresses, shared folders, and/or another fax machine regardless of the sender or time. If you make settings to forward received faxes, first add the forwarding destinations to the contacts list. To forward to an email address, you also need to configure the email server settings beforehand.

"Configuring a Mail Server" on page 352

"Setting a Shared Network Folder" on page 356

"Making Contacts Available" on page 372

Color documents cannot be forwarded to another fax machine. They are processed as documents that failed to be forwarded.

Note:

- *As well as using the printer's control panel, you can use Web Config to make forwarding settings to receive faxes. Select the **Fax** tab > **Save/Forward Settings** > **Unconditional Save/Forward**, and then make the forwarding destination settings in **Fax Output**.*
- *You can also print and/or save received faxes at the same time. Make the settings on the **Fax Output** screen mentioned above.*

1. Select **Settings** on the printer's control panel, then select **General Settings** > **Fax Settings**.
2. Select **Receive Settings** > **Save/Forward Settings** > **Unconditional Save/Forward**.

   When a message is displayed, check the content, and then tap **OK**.
3. Make settings for up to five forwarding destinations.

❶ Select **Forward**.

❷ Select **Yes**. To print the documents automatically while forwarding them, select **Yes and Print** instead.

❸**Destination** > **Add Entry**, and then select forwarding destinations from the contacts list. You can specify up to five forwarding destinations.

❹ Tap **Close** to finish selecting forwarding destinations, and then tap **Close**.

❺ In **Options When Forwarding Failed**, select whether to print received documents or save them in the printer's Inbox when forwarding fails.

❻ Tap **OK**.

> ***Important:***
> *When the Inbox is full, receiving faxes is disabled. You should delete the documents from the inbox once they have been checked. The number of documents that have failed to be forwarded is displayed on the on the home screen, in addition to other unprocessed jobs.*

Note:
*You can set the printer to send emails to people you want to notify about the results of forwarding faxes when the forwarding process is complete. As necessary, select **Email Notifications**, set the processes, and then select the destination to which you want to send notifications from the contacts list.*

4. Select **Close** to complete the **Unconditional Save/Forward** Settings.

Note:

- *This completes making unconditional forwarding settings to receive faxes. You can set **Common Settings** as necessary. For details, see the explanation for **Common Settings** in the **Save/Forward Settings** menu.*
- *If you have selected a shared folder on a network or an email address as the forwarding destination, we recommend that you test if you can send a scanned image to the destination in the scan mode. Select **Scan** > **Email**, or **Scan** > **Network Folder/FTP** from the home screen, select the destination, and then start scanning.*

Related Information

➡ "Save/Forward Settings" on page 312

Making Settings to Save and Forward Received Faxes with Specific Conditions

You can save and/or forward received faxes under set conditions.

Note:

- *The printer is set to print received faxes by default.*
- *You can also receive and save faxes without any conditions.*

  "Making Settings to Save and Forward Received Faxes" on page 392

Related Information

➡ "Making Saving Settings to Receive Faxes with Specific Conditions" on page 395
➡ "Making Forwarding Settings to Receive Faxes with Specified Conditions" on page 397

Making Saving Settings to Receive Faxes with Specific Conditions

You can make settings to save received faxes to the inbox and an external memory device from a specified sender or at a specified time. Saving a fax in a confidential box or the inbox allows you to confirm the contents of the received fax by viewing the fax on the printer's LCD screen before the printer prints the fax.

Before you use the feature to save received faxes at a specified time, make sure the printer's **Date/Time** and **Time Difference** settings are correct. Access the menu from **Settings** > **General Settings** > **Basic Settings** > **Date/Time Settings**.

Note:

- *As well as using the printer's control panel, you can use Web Config to make saving settings to receive faxes. Select the **Fax** tab > **Save/Forward Settings** > **Conditional Save/Forward**, select the number of the confidential box, and then select **Edit** and make the saving destination settings.*
- *You can also print and/or forward received faxes at the same time. Make the settings on the **Edit** screen mentioned above.*

1. Select **Settings** on the printer's control panel, and then select **General Settings** > **Fax Settings**.
2. Select **Receive Settings** > **Save/Forward Settings** > **Conditional Save/Forward**, and then tap › on an unregistered box under **Conditional Save/Forward**.
3. Select the **Name** box and enter the name you want to register.

4. Select the **Condition(s)** box to make a condition setting.
   - ❏ Sender Fax Number match: If the incoming fax number matches the conditions you selected in this item, the printer saves and forwards the received faxes.

     Select the **Sender Fax Number match** condition and enter the fax number (max. 20 digits) by selecting the **Fax Number** box.
   - ❏ Subaddress(SUB) perfect match: If the subaddress (SUB) is a perfect match, the printer saves and forwards the received faxes.

     Enable the Subaddress(SUB) perfect match setting and enter the password by selecting the **Subaddress(SUB)** box.
   - ❏ Password(SID) perfect match: If the password (SID) is perfectly matched, the printer saves and forwards the received faxes.

     Enable the Password(SID) perfect match setting and input the password by selecting the **Password(SID)** box.
   - ❏ Receiving Time: The printer saves and forwards received faxes during the specified time period.

     Enable the **Receiving Time** setting and then set the time in **Start Time** and **End Time**.

5. Select **Save/Forward Destination** and then make settings for the target destination, box, and/or an external memory device.

   - ❏ To save the received faxes to the Inbox or a confidential box:
     1. Select **Save to Fax Box**.
     2. Tap **Save to Fax Box** to set this to **On**.
     3. Select the box in which to save the document.
   - ❏ To save received faxes to an external memory device:
     1. Insert a memory device into the printer's external interface USB port.
     2. Select **Save to Memory Device**.
     3. Tap **Save to Memory Device** to set this to **On**.
     4. Check the message that is displayed, and then tap **Create**.

     A folder for saving received documents is created in the memory device.

> ***Important:***
> *Received documents are saved in the printer's memory temporarily before the documents are saved in the memory device connected to the printer. Because a memory full error disables sending and receiving faxes, keep the memory device connected to the printer.*

Note:
*To print received faxes at the same time, tap **Print** to set this to **On**.*

6. Select **Close** to complete the **Save/Forward Destination** Settings.

   Note:
   *You can set the printer to send emails to people you want to notify about the results of saving faxes, when saving is complete. As necessary, select **Email Notifications**, set the processes, and then select the destination to which you want to send notifications from the contacts list.*

7. Select **OK** until you return to the **Save/Forward Settings** screen to complete **Conditional Save/Forward**.

8. Select the registered box for which you made a condition setting, and then select **Enable**.

This completes making conditional saving settings to receive faxes. You can set **Common Settings** as necessary. For details, see the explanation for **Common Settings** in the **Save/Forward Settings** menu.

Related Information

➡ "Save/Forward Settings" on page 312
➡ "Viewing Received Faxes on the Printer's LCD Screen" on page 123

Making Forwarding Settings to Receive Faxes with Specified Conditions

You can make forwarding settings to a destination, an email address, shared folders or another fax machine from a specified sender or at a specified time. If you make settings to forward received faxes, first add the forwarding destination to the contacts list. To forward to an email address, you also need to configure the email server settings beforehand.

"Configuring a Mail Server" on page 352

"Setting a Shared Network Folder" on page 356

"Making Contacts Available" on page 372

Before you use the feature to forward received faxes at a specified time, make sure the printer's **Date/Time** and **Time Difference** settings are correct. Access the menu from **Settings** > **General Settings** > **Basic Settings** > **Date/Time Settings**.

Color documents cannot be forwarded to another fax machine. They are processed as documents that failed to be forwarded.

Note:
- *As well as using the printer's control panel, you can use Web Config to make forwarding settings to receive faxes. Select the **Fax** tab > **Save/Forward Settings** > **Conditional Save/Forward**, select the number of the confidential box, and then select **Edit** and make the forwarding destination settings.*
- *You can also print and/or save received faxes at the same time. Make the settings on the **Edit** screen mentioned above.*

1. Select **Settings** on the printer's control panel, and then select **General Settings** > **Fax Settings**.

2. Select **Receive Settings** > **Save/Forward Settings** > **Conditional Save/Forward**, and then tap › on an unregistered box under **Conditional Save/Forward**.

3. Select the **Name** box and enter the name you want to register.

4. Select the **Condition(s)** box to make a condition setting.

   ❏ Sender Fax Number match: If the incoming fax number matches the conditions you selected in this item, the printer saves and forwards the received faxes.

   Select the **Sender Fax Number match** condition and enter the fax number (max. 20 digits) by selecting the **Fax Number** box.

   ❏ Subaddress(SUB) perfect match: If the subaddress (SUB) is a perfect match, the printer saves and forwards the received faxes.

   Enable the Subaddress(SUB) perfect match setting and enter the password by selecting the **Subaddress(SUB)** box.

   ❏ Password(SID) perfect match: If the password (SID) is perfectly matched, the printer saves and forwards the received faxes.

   Enable the Password(SID) perfect match setting and input the password by selecting the **Password(SID)** box.

   ❏ Receiving Time: The printer saves and forwards received faxes during the specified time period.

   Enable the **Receiving Time** setting and then set the time in **Start Time** and **End Time**.

5. Select **Save/Forward Destination**, and then make settings for a forwarding destination.

❶ Select **Forward**.

❷ Select **Yes**. To print the documents automatically while forwarding them, select **Yes and Print** instead.

❸ Select **Destination** > **Add Entry**, and then select forwarding destinations from the contacts list. You can specify a forwarding destination.

❹ When you have finished selecting forwarding destinations, tap **Close**.

❺ Check that the forwarding destination you selected is correct, and then select **Close**.

❻ In **Options When Forwarding Failed**, select whether to print received documents or save them in the printer's Inbox when forwarding fails.

> ***Important:***
> *When the Inbox or a confidential box is full, receiving faxes is disabled. You should delete the documents from the inbox once they have been checked. The number of documents that have failed to be forwarded is displayed on the on the home screen, in addition to other unprocessed jobs.*

6. Select **Close** to complete the **Save/Forward Destination** Settings.

   Note:
   *You can set the printer to send emails to people you want to notify about the results of forwarding faxes when the forwarding process is complete. As necessary, select **Email Notifications**, set the processes, and then select the destination to which you want to send notifications from the contacts list.*

7. Select **OK** until you return to the **Save/Forward Settings** screen to complete **Conditional Save/Forward**.

8. Select the registered box for which you made a condition setting, and then select **Enable**.

This is completes making conditional saving settings to receive faxes. You can set **Common Settings** as necessary. For details, see the explanation for **Common Settings** in the **Save/Forward Settings** menu.

Note:

- *This completes making conditional forwarding settings to receive faxes. You can set **Common Settings** as necessary. For details, see the explanation for **Common Settings** in the **Save/Forward Settings** menu.*
- *If you have selected a shared folder on a network or an email address as the forwarding destination, we recommend that you test if you can send a scanned image to the destination in the scan mode. Select **Scan** > **Email**, or **Scan** > **Network Folder/FTP** from the home screen, select the destination, and then start scanning.*

Related Information

➡ "Save/Forward Settings" on page 312

Making Settings for Blocking Junk Faxes

You can block junk faxes.

1. Select **Settings** on the printer's control panel.

2. Select **General Settings** > **Fax Settings** > **Basic Settings** > **Rejection Fax**.

3. Set the condition to block junk faxes.

   Select **Rejection Fax**, and then enable the following options.

   - Rejection Number List: Rejects faxes that are in the Rejection Number List.
   - Fax Header Blank: Rejects faxes that have blank header information.
   - Unregistered Contacts: Rejects faxes that have not been added to the contact list.

4. Tap ← to return to the **Rejection Fax** screen.

5. If you are using the **Rejection Number List**, select **Edit Blocked Number list**, and then edit the list.

Making Settings to Send and Receive Faxes on a Computer

To send and receive faxes on a client computer, FAX Utility must be installed on the computer connected by network or USB cable.

Enabling Sending Faxes from a Computer

Set up the following using Web Config.

1. Access Web Config, click the **Fax** tab, and then click **Send Settings**.
2. Select **Use** for the **PC to FAX Function**.

   The default setting value of the **PC to FAX Function** is **Use**. To disable sending faxes from any computer, select **Do Not Use**.
3. Click **OK**.

Making Save to Computer Setting to Receive Faxes

You can receive faxes on a computer by using the FAX Utility. Install FAX Utility on the client computer and make the setting. For details, see Basic Operations in the FAX Utility help (displayed on the main window).

The setting item below on the printer's control panel is set to **Yes**, and the faxes received can be saved on the computer.

Settings > **General Settings** > **Fax Settings** > **Receive Settings** > **Save/Forward Settings** > **Unconditional Save/Forward** > **Save to Computer**

Making Save to Computer Setting to Also Print on the Printer to Receive Faxes

You can make the setting to print received faxes on the printer as well as save them on a computer.

1. Select **Settings** on the printer's control panel.
2. Select **General Settings** > **Fax Settings** > **Receive Settings**.
3. Select **Save/Forward Settings** > **Unconditional Save/Forward** > **Save to Computer** > **Yes and Print**.

Making Save to Computer Setting not to Receive Faxes

To set the printer not to save received faxes on the computer, change the settings on the printer.

Note:
You can also change the settings using the FAX Utility. However, if there are any faxes that have been unsaved to the computer, the feature does not work.

1. Select **Settings** on the printer's control panel.
2. Select **General Settings** > **Fax Settings** > **Receive Settings**.
3. Select **Save/Forward Settings** > **Unconditional Save/Forward** > **Save to Computer** > **No**.

Making Basic Operation Settings for the Printer

Setting the Control Panel

Setup for the printer's control panel. You can set up as follows.

1. Access Web Config and select the **Device Management** tab > **Control Panel**.

2. Set up the following items as necessary.
   - ❏ Language

     Select the displayed language on the control panel.
   - ❏ Panel Lock

     If you select **ON**, you cannot select items that require the administrator's authority. To select them, log in to the printer as the administrator. If the administrator password is not set, the panel lock is disabled.
   - ❏ Operation Timeout

     If you select **ON**, when you log in as the access control user or administrator, you are automatically logged out and go to the initial screen if there is no activity for a certain period of time.

     You can set between 10 seconds and 240 minutes by the second.

   Note:
   You can also set up from the printer's control panel.
   - ❏ *Language :* ***Settings*** > ***General Settings*** > ***Basic Settings*** > ***Language***
   - ❏ *Panel Lock :* ***Settings*** > ***General Settings*** > ***System Administration*** > ***Security Settings*** > ***Admin Settings*** > ***Lock Setting***
   - ❏ *Operation Timeout :* ***Settings*** > ***General Settings*** > ***Basic Settings*** > ***Operation Time Out*** *(You can specify On or Off.)*

3. Click **OK**.

Power Saving Settings During Inactivity

You can set up the time to shift to the power saving mode or to turn the power off when the printer's control panel is not operated for a certain period of time. Set the time depending on your usage environment.

1. Access Web Config and select the **Device Management** tab > **Power Saving**.

2. Enter the time for the **Sleep Timer** to switch to power saving mode when inactivity occurs.

   Note:
   You can also set up from the printer's control panel.

   Settings > ***General Settings*** > ***Basic Settings*** > ***Sleep Timer***

3. Select the turning off time for the **Power Off Timer** or **Power Off If Inactive** depending on the location of purchase. If you use the fax function, set to **None** or **Off** depending on the location of purchase.

   Note:
   You can also set up from the printer's control panel.

   Settings > ***General Settings*** > ***Basic Settings*** > ***Power Off Timer*** *or* ***Power Off Settings***

4. Click **OK**.

Setting the Sound

Make the sound settings when operating the control panel, printing, faxing and so on.

Note:
You can also set up from the printer's control panel.

Settings > ***General Settings*** > ***Basic Settings*** > ***Sounds***

1. Access Web Config and select the **Device Management** tab > **Sound**.

2. Set up the following items as necessary.
   - ❏ Normal Mode
     Set the sound when the printer is set to **Normal Mode**.
   - ❏ Quiet Mode
     Set the sound when the printer is set to **Quiet Mode**.
     This is enabled when the one of the following items is enabled.
     - ❏ Printer's control panel:
       Settings > **General Settings** > **Printer Settings** > **Quiet Mode**
       Settings > **General Settings** > **Fax Settings** > **Receive Settings** > **Print Settings** > **Quiet Mode**
     - ❏ Web Config :
       Fax tab > **Print Settings** > **Quiet Mode**

3. Click **OK**.

Synchronizing the Date and Time with Time Server

When synchronizing with the time server (NTP server), you can synchronize the time of the printer and the computer on the network. The time server may be operated within the organization or published on the Internet.

When using the CA certificate or Kerberos authentication, time-related trouble can be prevented by synchronizing with the time server.

1. Access Web Config and select the **Device Management** tab > **Date and Time** > **Time Server**.

2. Select **Use** for **Use Time Server**.

3. Enter the time server address for **Time Server Address**.

   You can use IPv4, IPv6 or FQDN format. Enter 252 characters or less. If you do not specify this, leave it blank.

4. Enter **Update Interval (min)**.

   You can set up to 10,080 minutes by the minute.

5. Click **OK**.

   Note:
   You can confirm the connection status with the time server on ***Time Server Status****.*

Setting the Default Value for Scanning,Copying and Sending Faxes. (User Default Settings)

You can set the default value for the functions.

You can set the following functions.

- ❏ Scan to Network Folder/FTP
- ❏ Scan to Email
- ❏ Scan to Memory Device
- ❏ Scan to Cloud
- ❏ Copy
- ❏ Fax

1. Access Web Config and select the functions for which you want to set the default value for the **Scan/Copy** tab > **User Default Settings**.

   Select the **Fax** tab > **User Default Settings** to set the default value for fax.

2. Set each item.

3. Click **OK**.

   If the combination of the value is invalid, it is automatically modified, and then a valid value is set.

Problems when Making Settings

Hints to Solving Problems

- ❏ Checking the error message

  When trouble has occurred, first check whether there are any messages on the printer's control panel or driver screen. If you have the notification email set when the events occur, you can promptly learn the status.

- ❏ Network connection report

  Diagnose the network and the printer status, and then print the result.

  You can find the diagnosed error from the printer side.

- ❏ Checking the communication status

  Check the communication status of server computer or client computer by using the command such as ping and ipconfig.

- ❏ Connection test

  For checking the connection between the printer to the mail server, perform the connection test from the printer. Also, check the connection from the client computer to the server to check the communication status.

- ❏ Initializing the settings

  If the settings and communication status show no problem, the problems may be solved by disabling or initializing the network settings of the printer, and then setting up again.

Cannot Access Web Config

The IP address is not assigned to the printer.

A valid IP address may not be assigned to the printer. Configure the IP address using the printer's control panel. You can confirm the current setting information with a network status sheet or from the printer's control panel.

Web browser does not support the Encryption Strength for SSL/TLS.

SSL/TLS has the Encryption Strength. You can open Web Config by using a web browser that supports bulk encryptions as indicated below. Check you are using the a supported browser.

- ❏ 80bit: AES256/AES128/3DES
- ❏ 112bit: AES256/AES128/3DES
- ❏ 128bit: AES256/AES128
- ❏ 192bit: AES256
- ❏ 256bit: AES256

CA-signed Certificate is expired.

If there is a problem with the expiration date of the certificate, "The certificate has expired" is displayed when connecting to Web Config with SSL/TLS communication (https). If the message appears before its expiration date, make sure that the printer's date is configured correctly.

The common name of the certificate and the printer do not match.

If the common name of the certificate and the printer do not match, the message "The name of the security certificate does not match…" is displayed when accessing Web Config using SSL/TLS communication (https). This happens because the following IP addresses do not match.

- ❏ The printer's IP address entered to common name for creating a Self-signed Certificate or CSR
- ❏ IP address entered to web browser when running Web Config

For Self-signed Certificate, update the certificate.

For CA-signed Certificate, take the certificate again for the printer.

The proxy server setting of local address is not set to web browser.

When the printer is set to use a proxy server, configure the web browser not to connect to the local address via the proxy server.

- ❏ Windows:

  Select **Control Panel** > **Network and Internet** > **Internet Options** > **Connections** > **LAN settings** > **Proxy server**, and then configure not to use the proxy server for LAN (local addresses).

- ❏ Mac OS:

  Select **System Preferences** > **Network** > **Advanced** > **Proxies**, and then register the local address for **Bypass proxy settings for these Hosts & Domains**.

  Example:

  192.168.1.*: Local address 192.168.1.XXX, subnet mask 255.255.255.0

  192.168.*.*: Local address 192.168.XXX.XXX, subnet mask 255.255.0.0

Managing the Printer

Introduction of Product Security Features

This section introduces the security function of the Epson Devices.

Feature name	Feature type	What to set	What to prevent
Setup for the administrator password	Locks the system settings, such as connection setup for network or USB, detail setup for fax reception/transmission or transferring, and the user default settings.	An administrator sets a password to the device. You can set or change from both Web Config and the printer's control panel.	Prevent from illegally reading and changing the information stored in the device such as ID, password, network settings, and contacts. Also, reduce a wide range of security risks such as leakage of information for the network environment or security policy.
Setup for access control	Limits the functions that can be used on devices, such as print, scan, copy, and fax for each user. If you log on with a user account registered in advance, you are allowed to use certain functions. In addition, after logging on from the control panel, you will be logged off automatically if there is no activity for a certain period of time.	Register any user account, and then select the function you want to allow, such as copy and scan. You can register up to 10 user accounts.	The risk of leakage and unauthorized viewing of data can be reduced by minimizing the numbers of functions in accordance with the business content and the role of the user.
Setup for external interface	Controls the interface, such as USB port that connects to the device.	Enable or disable the USB port for connecting external devices such as USB memory and USB connection with the computer.	❏ USB port control: Reduces the possibility of data being taken through unauthorized scanning of confidential documents. ❏ USB connection of computer: Prevents unauthorized use of the device by prohibiting printing or scanning without going through the network.

Related Information

➡ "Application for Configuring Printer Operations (Web Config)" on page 299
➡ "Configuring the Administrator Password" on page 406
➡ "Restricting Available Features" on page 414
➡ "Disabling the External Interface" on page 416

Administrator Settings

Configuring the Administrator Password

When you set the administrator password, you can prevent the users from changing system management settings. You can set and change the administrator password using either Web Config, the printer's control panel, or Epson Device Admin. When using Epson Device Admin, see the Epson Device Admin guide or help.

Related Information

➡ "Application for Configuring Printer Operations (Web Config)" on page 299
➡ "Software for Managing Devices on the Network (Epson Device Admin)" on page 301

Configuring the Administrator Password from the Control Panel

You can set the administrator password from the printer's control panel.

1. Select **Settings** on the printer's control panel.
2. Select **General Settings** > **System Administration** > **Security Settings** > **Admin Settings**.
3. Select **Admin Password** > **Register**.
4. Enter the new password.
5. Enter the password again.

Note:
*You can change or delete the administrator password when you select **Change** or **Reset** on the **Admin Password** screen and enter the administrator password.*

Configuring the Administrator Password from a Computer

You can set the administrator password using Web Config.

1. Access Web Config and select the **Product Security** tab > **Change Administrator Password**.
2. Enter a password to **New Password** and **Confirm New Password**. Enter the user name, if necessary.

   If you want to change the password to new one, enter a current password.
3. Select **OK**.

   Note:
   - ❑ *To set or change the locked menu items, click **Administrator Login**, and then enter the administrator password.*
   - ❑ *To delete the administrator password, click **Product Security** tab > **Delete Administrator Password**, and then enter the administrator password.*

Related Information

➡ "Application for Configuring Printer Operations (Web Config)" on page 299

Controlling the Panel Operation

If you set the administrator password and enable the Lock Setting, you can lock the items related to the printer's system settings so that users cannot change them.

Enabling the Lock Setting

Enable the Lock Setting for the printer where the password is set.

Specify an administrator's password first.

Enabling the Lock Setting from the Control Panel

1. Select **Settings** on the printer's control panel.
2. Select **General Settings** > **System Administration** > **Security Settings** > **Admin Settings**.
3. Select **On** on **Lock Setting**.

Check that is displayed on the home screen.

Enabling the Lock Setting from a Computer

1. Access Web Config and click the **Administrator Login**.
2. Enter the user name and password, and then click **OK**.
3. Select the **Device Management** tab > **Control Panel**.
4. On the **Panel Lock**, select **ON**.
5. Click **OK**.
6. Check that is displayed on the home screen on the printer's control panel.

Related Information

➡ "Application for Configuring Printer Operations (Web Config)" on page 299

Lock Setting Items for General Settings Menu

This is a list of the Lock Setting items in **Settings** > **General Settings** on the control panel.

Some functions can be set enabled or disabled individually.

General Settings menu	Panel Lock
Basic Settings	-

General Settings menu		Panel Lock
	LCD Brightness	-
	Sounds	-
	Sleep Timer	✓
	Wake from Sleep	-
	Power Off Timer or Power Off Settings	✓
	Date/Time Settings	✓
	Country/Region	✓
	Language	✓*1
	Start-up Screen	✓
	Edit Home	✓
	Wall Paper	✓
	Operation Time Out	✓
	Keyboard	-
	Default Screen(Job/Status)	✓

General Settings menu		Panel Lock
Printer Settings		-
	Paper Source Settings	-
	Universal Print Settings	✓
	Auto Error Solver	✓
	Memory Device Interface	✓
	Thick Paper	✓*1
	Quiet Mode	✓*1
	Ink Drying Time	-
	Bidirectional	-
	Output Tray Auto Extension	-
	PC Connection via USB	✓

General Settings menu	Panel Lock
Network Settings	✓

General Settings menu			Panel Lock
	Wi-Fi Setup		✓
	Wired LAN Setup		✓
	Network Status		✓
		Wired LAN/Wi-Fi Status	✓*2
		Wi-Fi Direct Status	✓*2
		Email Server Status	✓*2
		Print Status Sheet	✓*2
	Connection Check		✓*3
	Advanced		✓
		Device Name	✓
		TCP/IP	✓
		Proxy Server	✓
		Email Server	✓
		IPv6 Address	✓
		MS Network Sharing	✓
		Link Speed & Duplex	✓
		Redirect HTTP to HTTPS	✓
		Disable IPsec/IP Filtering	✓
		Disable IEEE802.1X	✓

General Settings menu		Panel Lock
Web Service Settings		✓
	Epson Connect Services	✓

General Settings menu	Panel Lock
Fax Settings	✓

General Settings menu		Panel Lock
	Quick Operation Button	✓
	Basic Settings	✓
	Send Settings	✓
	Receive Settings	✓
	Report Settings	✓
	Security Settings	✓
	Check Fax Connection	✓
	Fax Setting Wizard	✓

General Settings menu		Panel Lock
Scan Settings		✓
	Confirm Recipient	✓
	Email Server	✓

General Settings menu	Panel Lock
System Administration	✓

General Settings menu				Panel Lock
	Contacts Manager			✓
		Register/Delete		✓*1*4
		Frequent		✓*4
		Print Contacts		✓
		View Options		✓*4
		Search Options		✓*4
	Clear Internal Memory Data			✓
	Security Settings			✓
		Restrictions		✓
		Access Control		✓
		Admin Settings		✓
			Admin Password	✓
			Lock Setting	✓
		Password Encryption		✓
	Customer Research			✓
	Restore Default Settings			✓
	Firmware Update			✓

✓ = To be locked.

- = Not to be locked.

*1 : You can enable or disable the lock from **General Settings** > **System Administration** > **Security Settings** > **Restrictions**.

*2 : Even though items on the upper level can be locked by administrator lock, you can still access them from the same name menu of **Settings** > **Printer Status/Print**.

*3 : Even though items on the upper level can be locked by administrator lock, you can still access them from Home > > **Description** > **When you cannot connect to the network**.

*4 : Even though items on the upper level can be locked by administrator lock, you can still access them from the same name menu of **Settings** > **Contacts Manager**.

Related Information

➡ "Other Lock Setting Items" on page 411
➡ "Items That Can Be Set Individually" on page 412

Other Lock Setting Items

Besides the General Settings menu, Lock Setting would be enabled to the items below.

- ❏ Presets
  - ❏ Add New
  - ❏ Delete
  - ❏ Rename
  - ❏ Add or remove to Home screen
  - ❏ Changing user settings
- ❏ **Settings** > **User Settings**.

Related Information

➡ "Lock Setting Items for General Settings Menu" on page 407
➡ "Items That Can Be Set Individually" on page 412

Operating Display and Function Setting Individually

For the some target items of the Lock Setting, you can individually set whether they are enabled or disabled.

You can set each user's availability as necessary, such as registering or changing the contacts, displaying job history, etc.

1. Select **Settings** on the printer's control panel.
2. Select **General Settings** > **System Administration** > **Security Settings** > **Restrictions**.
3. Select the item for the function that you want to change the setting of, and then set to **On** or **Off**.

Items That Can Be Set Individually

The administrator can permit the items below to display and change settings individually.

- ❏ Job Log Access : **Job/Status** > **Log**
  Control the display of the status monitor's job history. Select **On** to permit the job history to display.
- ❏ Access to Register/Delete Contacts : **Settings** > **Contacts Manager** > **Register/Delete**
  Control the registering and changing of contacts. Select **On** to register or change the contacts.
- ❏ Fax Recent Access : **Fax** > **Recipient** > **Recent**
  Control the display of destination when sending and receiving a fax. Select **On** to display the destination.
- ❏ Fax Transmission Log Access : **Fax** > **Menu** > **Transmission Log**
  Control the display of the communication history of a fax. Select **On** to display the communication history.
- ❏ Access to Fax Report : **Fax** > **Menu** > **Fax Report**
  Control the printing of the fax report. Select **On** to permit printing.
- ❏ Access to Print Save History of Scan to Network Folder/FTP : **Scan** > **Network Folder/FTP** > **Menu** > **Print Save History**
  Control the printing of save history for scan to network folder function. Select **On** to permit the printing.
- ❏ Access to Recent of Scan to Email : **Scan** > **Email** > **Recipient** > **History**
  Control the display of the history for the scan to mail function. Select **On** to display the history.

- Access to Show Sent History of Scan to Email : **Scan** > **Email** > **Menu** > **Show Sent History**

  Control the display of the history of email sending for the scan to mail function. Select **On** to display the history of email sending.

- Access to Print Sent History of Scan to Email : **Scan** > **Email** > **Menu** > **Print Sent History**

  Control the printing of the history of email sending for the scan to mail function. Select **On** to permit the printing.

- Access to Language : **Settings** > **Language**

  Control the changing of the language displayed on the control panel. Select **On** to change the languages.

- Access to Thick Paper : **Settings** > **General Settings** > **Printer Settings** > **Thick Paper**

  Control the changing of the settings of the Thick Paper function. Select **On** to change the settings.

- Access to Quiet Mode : **Settings** > **General Settings** > **Printer Settings** > **Quiet Mode**

  Control the changing of settings of the Quiet Mode function. Select **On** to change the settings.

- Protection of Personal Data :

  Control the display of the destination information on speed dial registration. Select **On** to display the destination as (***).

Related Information

➡ "Lock Setting Items for General Settings Menu" on page 407
➡ "Other Lock Setting Items" on page 411

Logging on to the Printer as an Administrator

If the administrator password is set to the printer, you need to log on as an administrator to operate the locked menu items.

Logging on the Printer Using the Control Panel

1. Tap .

2. Tap **Administrator**.

3. Enter the administrator password, and then tap **OK**.

   is displayed when being authenticated, then you can operate the locked menu items.

   Tap to log off.

Note:
*When you select **On** for **Settings** > **General Settings** > **Basic Settings** > **Operation Time Out**, you log off automatically after a specific length of time if there is no activity on the control panel.*

Logging on to the Printer from a Computer

When you log in to Web Config as an administrator, you can operate items that are set in the Lock Setting.

1. Enter the printer's IP address into a browser to run Web Config.

2. Click **Administrator Login**.

3. Enter the user name and administrator password in **User Name** and **Current password**.

4. Click **OK**.

   The locked items and **Administrator Logout** are displayed when being authenticated.

   Click **Administrator Logout** to log off.

Note:
*When you select **ON** for the **Device Management** tab > **Control Panel** > **Operation Timeout**, you log off automatically after a specific length of time if there is no activity on the control panel.*

Related Information

➡ "Application for Configuring Printer Operations (Web Config)" on page 299

Restricting Available Features

You can register user accounts on the printer, link them with functions, and control functions that users can use.

When enabling access control, the user can use functions such as copy, fax, etc. by entering the password on the printer's control panel and logging in to the printer.

The unavailable functions will be grayed out and cannot be selected.

From the computer, when you register the authentication information to the printer driver or scanner driver, you will be able to print or scan. For details of the driver settings, see the driver's help or manual.

Creating the User Account

Create the user account for access control.

1. Access Web Config and select the **Product Security** tab > **Access Control Settings** > **User Settings**.

2. Click **Add** for the number you want to register.

3. Set each item.

   ❏ User Name :

   Enter the name displayed on the user name list between 1 and 14 characters long using alphanumeric characters.

   ❏ Password :

   Enter a password between 0 and 20 characters long in ASCII (0x20-0x7E). When initializing the password, leave it blank.

   ❏ Select the check box to enable or disable each function.

   Select the function that you permit to use.

4. Click **Apply**.

   Return to the user setting list after a specific length of time.

   Check that the user name you registered on **User Name** is displayed and changed **Add** to **Edit**.

Related Information

➡ "Application for Configuring Printer Operations (Web Config)" on page 299

Editing the User Account

Edit the account registered to access control.

1. Access Web Config and select the **Product Security** tab > **Access Control Settings** > **User Settings**.
2. Click **Edit** for the number you want to edit.
3. Change each item.
4. Click **Apply**.

   Return to the user setting list after a specific length of time.

Related Information

➡ "Application for Configuring Printer Operations (Web Config)" on page 299

Deleting the User Account

Delete the account registered to access control.

1. Access Web Config and select the **Product Security** tab > **Access Control Settings** > **User Settings**.
2. Click **Edit** for the number you want to delete.
3. Click **Delete**.

   > ***Important:***
   > *When clicking **Delete**, the user account will be deleted without a confirmation message. Take care when deleting the account.*

   Return to the user setting list after a specific length of time.

Related Information

➡ "Application for Configuring Printer Operations (Web Config)" on page 299

Enabling Access Control

When enabling access control, only the registered user will be able to use the printer.

1. Access Web Config and select the **Product Security** tab > **Access Control Settings** > **Basic**.

2. Select **Enables Access Control**.

   If you select **Allows printing and scanning without authentication information**, you can print or scan from the drivers that are not set with the authentication information. Set it when you want to control the operation only from the printer's control panel and to permit printing and scanning from the computers.

3. Click **OK**.

   The completion message is displayed after a certain period of time.

   Confirm that the icons such as copy and scan are grayed out on the printer's control panel.

Related Information

➡ "Application for Configuring Printer Operations (Web Config)" on page 299

Disabling the External Interface

You can disable the interface that is used to connect the device to the printer. Make the restriction settings to restrict printing and scanning other than via network.

Note:
You can also make the restriction settings on the printer's control panel.

❏ *Memory Device* : ***Settings*** > ***General Settings*** > ***Printer Settings*** > ***Memory Device Interface*** > ***Memory Device***

❏ *PC Connection via USB* : ***Settings*** > ***General Settings*** > ***Printer Settings*** > ***PC Connection via USB***

1. Access Web Config and select the **Product Security** tab > **External Interface**.

2. Select **Disable** on the functions you want to set.

   Select **Enable** when you want to cancel controlling.

   ❏ Memory Device

   Prohibit saving the data to external memory via USB port for external device connection.

   ❏ PC Connection via USB

   You can restrict the usage of the USB connection from the computer. If you want to restrict it, select **Disable**.

3. Click **OK**.

4. Check that the disabled port cannot be used.

   ❏ Memory Device

   Confirm that there is no response when connecting a storage device such as USB memory to the external interface USB port.

❏ PC Connection via USB

If the driver was installed on the computer

Connect the printer to the computer using a USB cable, and then confirm that the printer does not print and scan.

If the driver was not installed on the computer

Windows:

Open the device manager and keep it, connect the printer to the computer using a USB cable, and then confirm that the device manager's display contents stays unchanged.

Mac OS:

Connect the printer to the computer using a USB cable, and then confirm that the printer is not listed if you want to add the printer from **Printers & Scanners**.

Related Information

➡ "Application for Configuring Printer Operations (Web Config)" on page 299

Monitoring a Remote Printer

Checking Information for a Remote Printer

You can check the following information of the operating printer from **Status** by using Web Config.

❏ Product Status

Check the status, cloud service, product number, MAC address, etc.

❏ Network Status

Check the information of the network connection status, IP address, DNS server, etc.

❏ Usage Status

Check the first day of printings, printed pages, printing count for each language, scanning count, etc.

❏ Hardware Status

Check the status of each function of the printer.

❏ Job History

Check the job log for print jobs, transmission jobs, and so on.

Related Information

➡ "Application for Configuring Printer Operations (Web Config)" on page 299

Receiving Email Notifications When Events Occur

About Email Notifications

This is the notification function that, when events such as printing stop and printer error occur, send the email to the specified address.

You can register up to five destinations and set the notification settings for each destination.

To use this function, you need to set up the mail server before setting up notifications.

Related Information

➡ "Configuring a Mail Server" on page 352

Configuring Email Notification

Configure email notification by using Web Config.

1. Access Web Config and select the **Device Management** tab > **Email Notification**.

2. Set the subject of email notification.

   Select the contents displayed on the subject from the two pull-down menus.

   ❏ The selected contents are displayed next to **Subject**.

   ❏ The same contents cannot be set on left and right.

   ❏ When the number of characters in **Location** exceeds 32 bytes, characters exceeding 32 bytes are omitted.

3. Enter the email address for sending the notification email.

   Use A-Z a-z 0-9 ! # $ % & ' * + - . /= ? ^ _ { | } ~ @, and enter between 1 and 255 characters.

4. Select the language for the email notifications.

5. Select the check box on the event for which you want to receive a notification.

   The number of **Notification Settings** is linked to the destination number of **Email Address Settings**.

   Example :

   If you want a notification sent to the email address set for number 1 in **Email Address Settings** when the printer is out of paper, select the check box column **1** in line **Paper out**.

6. Click **OK**.

   Confirm that an email notification will be sent by causing an event.

   Example : Print by specifying the Paper Source where paper is not set.

Related Information

➡ "Application for Configuring Printer Operations (Web Config)" on page 299
➡ "Configuring a Mail Server" on page 352

Items for Email Notification

Items	Settings and Explanation
Reset Ink Level	Notice when the ink is expended.
Ink low	Notice when the ink is nearing expended.
Maintenance box: end of service life	Notice when the maintenance box is full.

Items	Settings and Explanation
Maintenance box: nearing end	Notice when the maintenance box is nearing full.
Administrator password changed	Notice when administrator password has been changed.
Paper out	Notice when the paper-out error has occurred in the specified paper source..
Printing stopped*	Notice when the printing is stopped due to paper jam or paper cassette not set.
Printer error	Notice when the printer error has occurred.
Scanner error	Notice when the scanner error has occurred.
Fax error	Notice when the fax error has occurred.
Wi-Fi failure	Notice when the error of the wireless LAN interface has occurred.

Related Information

➡ "Configuring Email Notification" on page 418

Backing Up the Settings

You can export the setting value set from Web Config to the file. You can use it for backing up the contacts, setting values, replacing the printer, etc.

The exported file cannot be edited because it is exported as a binary file.

Export the settings

Export the setting for the printer.

1. Access Web Config, and then select the **Device Management** tab > **Export and Import Setting Value** > **Export**.

2. Select the settings that you want to export.

   Select the settings you want to export. If you select the parent category, subcategories are also selected. However, subcategories that cause errors by duplicating within the same network (such as IP addresses and so on) cannot be selected.

3. Enter a password to encrypt the exported file.

   You need the password to import the file. Leave this blank if you do not want to encrypt the file.

4. Click **Export**.

   Important:

   If you want to export the printer's network settings such as the device name and IPv6 address, select ***Enable to select the individual settings of device*** *and select more items. Only use the selected values for the replacement printer.*

Related Information

➡ "Application for Configuring Printer Operations (Web Config)" on page 299

Import the settings

Import the exported Web Config file to the printer.

> ***Important:***
> *When importing values that include individual information such as a printer name or IP address, make sure the same IP address does not exist on the same network.*

1. Access Web Config, and then select the **Device Management** tab > **Export and Import Setting Value** > **Import**.
2. Select the exported file, and then enter the encrypted password.
3. Click **Next**.
4. Select the settings that you want to import, and then click **Next**.
5. Click **OK**.

The settings are applied to the printer.

Related Information

➡ "Application for Configuring Printer Operations (Web Config)" on page 299

Advanced Security Settings

This section explains advanced security features.

Security Settings and Prevention of Danger

When a printer is connected to a network, you can access it from a remote location. In addition, many people can share the printer, which is helpful in improving operational efficiency and convenience. However, risks such as illegal access, illegal use, and tampering with data are increased. If you use the printer in an environment where you can access the Internet, the risks are even higher.

For printers that do not have access protection from the outside, it will be possible to read the print job logs that are stored in the printer from the Internet.

In order to avoid this risk, Epson printers have a variety of security technologies.

Set the printer as necessary according to the environmental conditions that have been built with the customer's environment information.

Name	Feature type	What to set	What to prevent
Control of protocol	Controls the protocols and services to be used for communication between printers and computers, and it enables and disables features.	A protocol or service that is applied to features allowed or prohibited separately.	Reducing security risks that may occur through unintended use by preventing users from using unnecessary functions.
SSL/TLS communications	The communication content is encrypted with SSL/TLS communications when accessing to the Epson server on the Internet from the printer, such as communicating to the computer via web browser, using Epson Connect, and updating firmware.	Obtain a CA-signed certificate, and then import it to the printer.	Clearing an identification of the printer by the CA-signed certification prevents impersonation and unauthorized access. In addition, communication contents of SSL/TLS are protected, and it prevents the leakage of contents for printing data and setup information.
IPsec/IP filtering	You can set to allow severing and cutting off of data that is from a certain client or is a particular type. Since IPsec protects the data by IP packet unit (encryption and authentication), you can safely communicate unsecured protocol.	Create a basic policy and individual policy to set the client or type of data that can access the printer.	Protect unauthorized access, and tampering and interception of communication data to the printer.
IEEE802.1X	Only allows authenticated users to connect to the network. Allows only a permitted user to use the printer.	Authentication setting to the RADIUS server (authentication sever).	Protect unauthorized access and use to the printer.

Related Information

➡ "Controlling Using Protocols" on page 422
➡ "SSL/TLS Communication with the Printer" on page 431
➡ "Encrypted Communication Using IPsec/IP Filtering" on page 432
➡ "Connecting the Printer to an IEEE802.1X Network" on page 444

Security Feature Settings

When setting IPsec/IP filtering or IEEE802.1X, it is recommended that you access Web Config using SSL/TLS to communicate settings information in order to reduce security risks such as tampering or interception.

Make sure you configure the administrator password before setting IPsec/IP filtering or IEEE802.1X.

Also, you can use Web Config by connecting the printer directly to the computer using an Ethernet cable, and then entering the IP address into a web browser. The printer can be connected in a secure environment after the security settings have been completed.

Controlling Using Protocols

You can print using a variety of pathways and protocols.

If you are using a multi-function printer, you can use network scanning and PC-FAX from an unspecified number of network computers.

You can lower unintended security risks by restricting printing from specific pathways or by controlling the available functions.

Controlling protocols

Configure the protocol settings.

1. Access Web Config and then select the **Network Security** tab > **Protocol**.
2. Configure each item.
3. Click **Next**.
4. Click **OK**.

   The settings are applied to the printer.

Related Information

➡ "Application for Configuring Printer Operations (Web Config)" on page 299
➡ "Protocols you can Enable or Disable" on page 422
➡ "Protocol Setting Items" on page 423

Protocols you can Enable or Disable

Protocol	Description
Bonjour Settings	You can specify whether to use Bonjour. Bonjour is used to search for devices, print, and so on.
SLP Settings	You can enable or disable the SLP function. SLP is used for push scanning and network searching in EpsonNet Config.
WSD Settings	You can enable or disable the WSD function. When this is enabled, you can add WSD devices, and print from the WSD port.
LLTD Settings	You can enable or disable the LLTD function. When this is enabled, it is displayed on the Windows network map.
LLMNR Settings	You can enable or disable the LLMNR function. When this is enabled, you can use name resolution without NetBIOS even if you cannot use DNS.
LPR Settings	You can specify whether or not to allow LPR printing. When this is enabled, you can print from the LPR port.
RAW(Port9100) Settings	You can specify whether or not to allow printing from the RAW port (Port 9100). When this is enabled, you can print from the RAW port (Port 9100).

Protocol	Description
IPP Settings	You can specify whether or not to allow printing from IPP. When this is enabled, you can print over the Internet.
SNMPv1/v2c Settings	You can specify whether or not to enable SNMPv1/v2c. This is used to set up devices, monitoring, and so on.
SNMPv3 Settings	You can specify whether or not to enable SNMPv3. This is used to set up encrypted devices, monitoring, etc.

Related Information

➡ "Controlling protocols" on page 422
➡ "Protocol Setting Items" on page 423

Protocol Setting Items

Bonjour Settings

Items	Setting value and Description
Use Bonjour	Select this to search for or use devices through Bonjour.
Bonjour Name	Displays the Bonjour name.
Bonjour Service Name	Displays the Bonjour service name.
Location	Displays the Bonjour location name.
Top Priority Protocol	Select the top priority protocol for Bonjour print.

SLP Settings

Items	Setting value and Description
Enable SLP	Select this to enable the SLP function. This is used such as network searching in EpsonNet Config.

WSD Settings

Items	Setting value and Description
Enable WSD	Select this to enable adding devices using WSD, and print and scan from the WSD port.
Printing Timeout (sec)	Enter the communication timeout value for WSD printing between 3 to 3,600 seconds.
Scanning Timeout (sec)	Enter the communication timeout value for WSD scanning between 3 to 3,600 seconds.
Device Name	Displays the WSD device name.
Location	Displays the WSD location name.

LLTD Settings

Items	Setting value and Description
Enable LLTD	Select this to enable LLTD. The printer is displayed in the Windows network map.
Device Name	Displays the LLTD device name.

LLMNR Settings

Items	Setting value and Description
Enable LLMNR	Select this to enable LLMNR. You can use name resolution without NetBIOS even if you cannot use DNS.

LPR Settings

Items	Setting value and Description
Allow LPR Port Printing	Select to allow printing from the LPR port.
Printing Timeout (sec)	Enter the timeout value for LPR printing between 0 to 3,600 seconds. If you do not want to timeout, enter 0.

RAW(Port9100) Settings

Items	Setting value and Description
Allow RAW(Port9100) Printing	Select to allow printing from the RAW port (Port 9100).
Printing Timeout (sec)	Enter the timeout value for RAW (Port 9100) printing between 0 to 3,600 seconds. If you do not want to timeout, enter 0.

IPP Settings

Items	Setting value and Description
Enable IPP	Select to enable IPP communication. Only printers that support IPP are displayed.
Allow Non-secure Communication	Select **Allowed** to allow the printer to communicate without any security measures (IPP).
Communication Timeout (sec)	Enter the timeout value for IPP printing between 0 to 3,600 seconds.
Require PIN Code when using IPP printing	Select whether or not to require a PIN code when using IPP printing. If you select **Yes**, IPP print jobs without PIN codes are not saved in the printer.
URL(Network)	Displays IPP URLs (http and https) when the printer is connected to the network. The URL is a combined value of the printer's IP address, Port number, and IPP printer name.

Items	Setting value and Description
URL(Wi-Fi Direct)	Displays IPP URLs (http and https) when the printer is connected by Wi-Fi Direct. The URL is a combined value of the printer's IP address, Port number, and IPP printer name.
Printer Name	Displays the IPP printer name.
Location	Displays the IPP location.

SNMPv1/v2c Settings

Items	Setting value and Description
Enable SNMPv1/v2c	Select to enable SNMPv1/v2c.
Access Authority	Set the access authority when SNMPv1/v2c is enabled. Select **Read Only** or **Read/Write**.
Community Name (Read Only)	Enter 0 to 32 ASCII (0x20 to 0x7E) characters.
Community Name (Read/Write)	Enter 0 to 32 ASCII (0x20 to 0x7E) characters.

SNMPv3 Settings

Items		Setting value and Description
Enable SNMPv3		SNMPv3 is enabled when the box is checked.
User Name		Enter between 1 and 32 characters using 1 byte characters.
Authentication Settings		
	Algorithm	Select an algorithm for an authentication for SNMPv3.
	Password	Enter the password for an authentication for SNMPv3. Enter between 8 and 32 characters in ASCII (0x20-0x7E). If you do not specify this, leave it blank.
	Confirm Password	Enter the password you configured for confirmation.
Encryption Settings		
	Algorithm	Select an algorithm for an encryption for SNMPv3.
	Password	Enter the password for an encryption for SNMPv3. Enter between 8 and 32 characters in ASCII (0x20-0x7E). If you do not specify this, leave it blank.
	Confirm Password	Enter the password you configured for confirmation.
Context Name		Enter within 32 characters or less in Unicode (UTF-8). If you do not specify this, leave it blank. The number of characters that can be entered varies depending on the language.

Related Information

➡ "Controlling protocols" on page 422
➡ "Protocols you can Enable or Disable" on page 422

Using a Digital Certificate

About Digital Certification

❏ CA-signed Certificate

This is a certificate signed by the CA (Certificate Authority.) You can obtain it to apply to the Certificate Authority. This certificate certifies the existence of the printer is and used for SSL/TLS communication so that you can ensure the safety of data communication.

When it is used for SSL/TLS communication, it is used as a server certificate.

When it is set to IPsec/IP Filtering or IEEE802.1x communication, it is used as a client certificate.

❏ CA Certificate

This is a certificate that is in chain of the CA-signed Certificate, also called the intermediate CA certificate. It is used by the web browser to validate the path of the printer's certificate when accessing the server of the other party or Web Config.

For the CA Certificate, set when to validate the path of server certificate accessing from the printer. For the printer, set to certify the path of the CA-signed Certificate for SSL/TLS connection.

You can obtain the CA certificate of the printer from the Certification Authority where the CA certificate is issued.

Also, you can obtain the CA certificate used to validate the server of the other party from the Certification Authority that issued the CA-signed Certificate of the other server.

❏ Self-signed Certificate

This is a certificate that the printer signs and issues itself. It is also called the root certificate. Because the issuer certifies itself, it is not reliable and cannot prevent impersonation.

Use it when making the security setting and performing simple SSL/TLS communication without the CA-signed Certificate.

If you use this certificate for an SSL/TLS communication, a security alert may be displayed on a web browser because the certificate is not registered on a web browser. You can use the Self-signed Certificate only for an SSL/TLS communication.

Related Information

➡ "Configuring a CA-signed Certificate" on page 426
➡ "Updating a Self-signed Certificate" on page 430
➡ "Configuring a CA Certificate" on page 430

Configuring a CA-signed Certificate

Obtaining a CA-signed Certificate

To obtain a CA-signed certificate, create a CSR (Certificate Signing Request) and apply it to certificate authority. You can create a CSR using Web Config and a computer.

Follow the steps to create a CSR and obtain a CA-signed certificate using Web Config. When creating a CSR using Web Config, a certificate is the PEM/DER format.

1. Access Web Config, and then select the **Network Security** tab. Next, select **SSL/TLS** > **Certificate** or **IPsec/IP Filtering** > **Client Certificate** or **IEEE802.1X** > **Client Certificate**.

   Whatever you choose, you can obtain the same certificate and use it in common.

2. Click **Generate** of **CSR**.

   A CSR creating page is opened.

3. Enter a value for each item.

   Note:
   Available key length and abbreviations vary by a certificate authority. Create a request according to rules of each certificate authority.

4. Click **OK**.

   A completion message is displayed.

5. Select the **Network Security** tab. Next, select **SSL/TLS** > **Certificate**, or **IPsec/IP Filtering** > **Client Certificate** or **IEEE802.1X** > **Client Certificate**.

6. Click one of the download buttons of **CSR** according to a specified format by each certificate authority to download a CSR to a computer.

   Important:
   Do not generate a CSR again. If you do so, you may not be able to import an issued CA-signed Certificate.

7. Send the CSR to a certificate authority and obtain a CA-signed Certificate.

   Follow the rules of each certificate authority on sending method and form.

8. Save the issued CA-signed Certificate to a computer connected to the printer.

   Obtaining a CA-signed Certificate is complete when you save a certificate to a destination.

Related Information

➡ "Application for Configuring Printer Operations (Web Config)" on page 299

CSR Setting Items

Items	Settings and Explanation
Key Length	Select a key length for a CSR.
Common Name	You can enter between 1 and 128 characters. If this is an IP address, it should be a static IP address. You can enter 1 to 5 IPv4 addresses, IPv6 addresses, host names, FQDNs by separating them with commas. The first element is stored to the common name, and other elements are stored to the alias field of the certificate subject. Example: Printer's IP address : 192.0.2.123, Printer name : EPSONA1B2C3 Common Name : EPSONA1B2C3,EPSONA1B2C3.local,192.0.2.123

Items	Settings and Explanation
Organization/ Organizational Unit/ Locality/ State/Province	You can enter between 0 and 64 characters in ASCII (0x20-0x7E). You can divide distinguished names with commas.
Country	Enter a country code in two-digit number specified by ISO-3166.
Sender's Email Address	You can enter the sender's email address for the mail server setting. Enter the same email address as the **Sender's Email Address** for the **Network** tab > **Email Server** > **Basic**.

Related Information

➡ "Obtaining a CA-signed Certificate" on page 426

Importing a CA-signed Certificate

Import the obtained CA-signed Certificate to the printer.

> ***Important:***
> - *Make sure that the printer's date and time is set correctly. Certificate may be invalid.*
> - *If you obtain a certificate using a CSR created from Web Config, you can import a certificate one time.*

1. Access Web Config and then select the **Network Security** tab. Next, select **SSL/TLS** > **Certificate**, or **IPsec/IP Filtering** > **Client Certificate** or **IEEE802.1X** > **Client Certificate**.

2. Click **Import**

   A certificate importing page is opened.

3. Enter a value for each item. Set **CA Certificate 1** and **CA Certificate 2** when verifying the path of the certificate on the web browser that accesses the printer.

   Depending on where you create a CSR and the file format of the certificate, required settings may vary. Enter values to required items according to the following.

   - A certificate of the PEM/DER format obtained from Web Config
     - **Private Key**: Do not configure because the printer contains a private key.
     - **Password**: Do not configure.
     - **CA Certificate 1/CA Certificate 2**: Optional
   - A certificate of the PEM/DER format obtained from a computer
     - **Private Key**: You need to set.
     - **Password**: Do not configure.
     - **CA Certificate 1/CA Certificate 2**: Optional
   - A certificate of the PKCS#12 format obtained from a computer
     - **Private Key**: Do not configure.
     - **Password**: Optional
     - **CA Certificate 1/CA Certificate 2**: Do not configure.

4. Click **OK**.

   A completion message is displayed.

Note:
*Click **Confirm** to verify the certificate information.*

Related Information

➡ "Application for Configuring Printer Operations (Web Config)" on page 299

CA-signed Certificate Importing Setting Items

Items	Settings and Explanation
Server Certificate or Client Certificate	Select a certificate's format. For SSL/TLS connection, the Server Certificate is displayed. For IPsec/IP Filtering or IEEE802.1x, the Client Certificate is displayed.
Private Key	If you obtain a certificate of the PEM/DER format by using a CSR created from a computer, specify a private key file that is match a certificate.
Password	If the file format is **Certificate with Private Key (PKCS#12)**, enter the password for encrypting the private key that is set when you obtain the certificate.
CA Certificate 1	If your certificate's format is **Certificate (PEM/DER)**, import a certificate of a certificate authority that issues a CA-signed Certificate used as server certificate. Specify a file if you need.
CA Certificate 2	If your certificate's format is **Certificate (PEM/DER)**, import a certificate of a certificate authority that issues CA Certificate 1. Specify a file if you need.

Related Information

➡ "Importing a CA-signed Certificate" on page 428

Deleting a CA-signed Certificate

You can delete an imported certificate when the certificate has expired or when an encrypted connection is no longer necessary.

> ***Important:***
> *If you obtain a certificate using a CSR created from Web Config, you cannot import a deleted certificate again. In this case, create a CSR and obtain a certificate again.*

1. Access Web Config, and then select the **Network Security** tab. Next, select **SSL/TLS** > **Certificate** or **IPsec/IP Filtering** > **Client Certificate** or **IEEE802.1X** > **Client Certificate**.

2. Click **Delete**.

3. Confirm that you want to delete the certificate in the message displayed.

Related Information

➡ "Application for Configuring Printer Operations (Web Config)" on page 299

Updating a Self-signed Certificate

Because the Self-signed Certificate is issued by the printer, you can update it when it has expired or when the content described changes.

1. Access Web Config and select the **Network Security** tab > **SSL/TLS** > **Certificate**.
2. Click **Update**.
3. Enter **Common Name**.

   You can enter up to 5 IPv4 addresses, IPv6 addresses, host names, FQDNs between 1 to 128 characters and separating them with commas. The first parameter is stored to the common name, and the others are stored to the alias field for the subject of the certificate.

   Example:

   Printer's IP address : 192.0.2.123, Printer name : EPSONA1B2C3

   Common name : EPSONA1B2C3,EPSONA1B2C3.local,192.0.2.123
4. Specify a validity period for the certificate.
5. Click **Next**.

   A confirmation message is displayed.
6. Click **OK**.

   The printer is updated.

Note:
*You can check the certificate information from **Network Security** tab > **SSL/TLS** > **Certificate** > **Self-signed Certificate** and click **Confirm**.*

Related Information

➡ "Application for Configuring Printer Operations (Web Config)" on page 299

Configuring a CA Certificate

When you set the CA Certificate, you can validate the path to the CA certificate of the server that the printer accesses. This can prevent impersonation.

You can obtain the CA Certificate from the Certification Authority where the CA-signed Certificate is issued.

Importing a CA Certificate

Import the CA Certificate to the printer.

1. Access Web Config and then select the **Network Security** tab > **CA Certificate**.

2. Click **Import**.

3. Specify the CA Certificate you want to import.

4. Click **OK**.

When importing is complete, you are returned to the **CA Certificate** screen, and the imported CA Certificate is displayed.

Related Information

➡ "Application for Configuring Printer Operations (Web Config)" on page 299

Deleting a CA Certificate

You can delete the imported CA Certificate.

1. Access Web Config and then select the **Network Security** tab > **CA Certificate**.

2. Click **Delete** next to the CA Certificate that you want to delete.

3. Confirm that you want to delete the certificate in the message displayed.

4. Click **Reboot Network**, and then check that the deleted CA Certificate is not listed on the updated screen.

Related Information

➡ "Application for Configuring Printer Operations (Web Config)" on page 299

SSL/TLS Communication with the Printer

When the server certificate is set using SSL/TLS (Secure Sockets Layer/Transport Layer Security) communication to the printer, you can encrypt the communication path between computers. Do this if you want to prevent remote and unauthorized access.

Configuring Basic SSL/TLS Settings

If the printer supports the HTTPS server feature, you can use an SSL/TLS communication to encrypt communications. You can configure and manage the printer using Web Config while ensuring security.

Configure encryption strength and redirect feature.

1. Access Web Config and select the **Network Security** tab > **SSL/TLS** > **Basic**.

2. Select a value for each item.

   ❏ Encryption Strength

   Select the level of encryption strength.

   ❏ Redirect HTTP to HTTPS

   Redirect to HTTPS when HTTP is accessed.

3. Click **Next**.

   A confirmation message is displayed.

4. Click **OK**.

   The printer is updated.

Related Information

➡ "Application for Configuring Printer Operations (Web Config)" on page 299

Configuring a Server Certificate for the Printer

1. Access Web Config and select the **Network Security** tab > **SSL/TLS** > **Certificate**.

2. Specify a certificate to use on **Server Certificate**.

   ❏ Self-signed Certificate

   A self-signed certificate has been generated by the printer. If you do not obtain a CA-signed certificate, select this.

   ❏ CA-signed Certificate

   If you obtain and import a CA-signed certificate in advance, you can specify this.

3. Click **Next**.

   A confirmation message is displayed.

4. Click **OK**.

   The printer is updated.

Related Information

➡ "Application for Configuring Printer Operations (Web Config)" on page 299
➡ "Configuring a CA-signed Certificate" on page 426
➡ "Updating a Self-signed Certificate" on page 430

Encrypted Communication Using IPsec/IP Filtering

About IPsec/IP Filtering

You can filter traffic based on IP addresses, services, and port by using IPsec/IP Filtering function. By combining of the filtering, you can configure the printer to accept or block specified clients and specified data. Additionally, you can improve security level by using an IPsec.

Note:
Computers that run Windows Vista or later or Windows Server 2008 or later support IPsec.

Configuring Default Policy

To filter traffic, configure the default policy. The default policy applies to every user or group connecting to the printer. For more fine-grained control over users and groups of users, configure group policies.

1. Access Web Config and then select the **Network Security** tab > **IPsec/IP Filtering** > **Basic**.
2. Enter a value for each item.
3. Click **Next**.

   A confirmation message is displayed.
4. Click **OK**.

   The printer is updated.

Related Information

➡ "Application for Configuring Printer Operations (Web Config)" on page 299

Default Policy Setting Items

Default Policy

Items	Settings and Explanation
IPsec/IP Filtering	You can enable or disable an IPsec/IP Filtering feature.

❑ **Access Control**

Configure a control method for traffic of IP packets.

Items	Settings and Explanation
Permit Access	Select this to permit configured IP packets to pass through.
Refuse Access	Select this to refuse configured IP packets to pass through.
IPsec	Select this to permit configured IPsec packets to pass through.

❏ **IKE Version**

Select **IKEv1** or **IKEv2** for **IKE Version**. Select one of them according to the device that the printer is connected to.

❏ IKEv1

The following items are displayed when you select **IKEv1** for **IKE Version**.

Items	Settings and Explanation
Authentication Method	To select **Certificate**, you need to obtain and import a CA-signed certificate in advance.
Pre-Shared Key	If you select **Pre-Shared Key** for **Authentication Method**, enter a pre-shared key between 1 and 127 characters.
Confirm Pre-Shared Key	Enter the key you configured for confirmation.

❏ IKEv2

The following items are displayed when you select **IKEv2** for **IKE Version**.

Items		Settings and Explanation
Local	Authentication Method	To select **Certificate**, you need to obtain and import a CA-signed certificate in advance.
	ID Type	If you select **Pre-Shared Key** for **Authentication Method**, select the type of ID for the printer.
	ID	Enter the printer's ID that matches the type of ID. You cannot use "@", "#", and "=" for the first character. **Distinguished Name** : Enter 1 to 255 1-byte ASCII (0x20 to 0x7E) characters. You need to include "=". **IP Address** : Enter IPv4 or IPv6 format. **FQDN** : Enter a combination of between 1 and 255 characters using A-Z, a-z, 0-9, "-", and period (.). **Email Address** : Enter 1 to 255 1-byte ASCII (0x20 to 0x7E) characters. You need to include "@". **Key ID** : Enter 1 to 255 1-byte ASCII (0x20 to 0x7E) characters.
	Pre-Shared Key	If you select **Pre-Shared Key** for **Authentication Method**, enter a pre-shared key between 1 and 127 characters.
	Confirm Pre-Shared Key	Enter the key you configured for confirmation.

Items		Settings and Explanation
Remote	Authentication Method	To select **Certificate**, you need to obtain and import a CA-signed certificate in advance.
	ID Type	If you select **Pre-Shared Key** for **Authentication Method**, select the type of ID for the device that you want to authenticate.
	ID	Enter the printer's ID that matches to the type of ID. You cannot use "@", "#", and "=" for the first character. **Distinguished Name** : Enter 1 to 255 1-byte ASCII (0x20 to 0x7E) characters. You need to include "=". **IP Address** : Enter IPv4 or IPv6 format. **FQDN** : Enter a combination of between 1 and 255 characters using A-Z, a-z, 0-9, "-", and period (.). **Email Address** : Enter 1 to 255 1-byte ASCII (0x20 to 0x7E) characters. You need to include "@". **Key ID** : Enter 1 to 255 1-byte ASCII (0x20 to 0x7E) characters.
	Pre-Shared Key	If you select **Pre-Shared Key** for **Authentication Method**, enter a pre-shared key between 1 and 127 characters.
	Confirm Pre-Shared Key	Enter the key you configured for confirmation.

❏ Encapsulation

If you select **IPsec** for **Access Control**, you need to configure an encapsulation mode.

Items	Settings and Explanation
Transport Mode	If you only use the printer on the same LAN, select this. IP packets of layer 4 or later are encrypted.
Tunnel Mode	If you use the printer on the Internet-capable network such as IPsec-VPN, select this option. The header and data of the IP packets are encrypted. **Remote Gateway(Tunnel Mode)**: If you select **Tunnel Mode** for **Encapsulation**, enter a gateway address between 1 and 39 characters.

❏ Security Protocol

If you select **IPsec** for **Access Control**, select an option.

Items	Settings and Explanation
ESP	Select this to ensure the integrity of an authentication and data, and encrypt data.
AH	Select this to ensure the integrity of an authentication and data. Even if encrypting data is prohibited, you can use IPsec.

❑ Algorithm Settings

It is recommended that you select **Any** for all settings or select an item other than **Any** for each setting. If you select **Any** for some of the settings and select an item other than **Any** for the other settings, the device may not communicate depending on the other device that you want to authenticate.

Items		Settings and Explanation
IKE	Encryption	Select the encryption algorithm for IKE. The items vary depending on the version of IKE.
	Authentication	Select the authentication algorithm for IKE.
	Key Exchange	Select the key exchange algorithm for IKE. The items vary depending on the version of IKE.
ESP	Encryption	Select the encryption algorithm for ESP. This is available when **ESP** is selected for **Security Protocol**.
	Authentication	Select the authentication algorithm for ESP. This is available when **ESP** is selected for **Security Protocol**.
AH	Authentication	Select the encryption algorithm for AH. This is available when **AH** is selected for **Security Protocol**.

Related Information

➡ "Configuring Default Policy" on page 433

Configuring Group Policy

A group policy is one or more rules applied to a user or user group. The printer controls IP packets that match with configured policies. IP packets are authenticated in the order of a group policy 1 to 10 then a default policy.

1. Access Web Config and then select the **Network Security** tab > **IPsec/IP Filtering** > **Basic**.
2. Click a numbered tab you want to configure.
3. Enter a value for each item.
4. Click **Next**.

   A confirmation message is displayed.
5. Click **OK**.

   The printer is updated.

Related Information

➡ "Application for Configuring Printer Operations (Web Config)" on page 299

Group Policy Setting Items

Items	Settings and Explanation
Enable this Group Policy	You can enable or disable a group policy.

Access Control

Configure a control method for traffic of IP packets.

Items	Settings and Explanation
Permit Access	Select this to permit configured IP packets to pass through.
Refuse Access	Select this to refuse configured IP packets to pass through.
IPsec	Select this to permit configured IPsec packets to pass through.

Local Address(Printer)

Select an IPv4 address or IPv6 address that matches your network environment. If an IP address is assigned automatically, you can select **Use auto-obtained IPv4 address**.

Note:
If an IPv6 address is assigned automatically, the connection may be unavailable. Configure a static IPv6 address.

Remote Address(Host)

Enter a device's IP address to control access. The IP address must be 43 characters or less. If you do not enter an IP address, all addresses are controlled.

Note:
If an IP address is assigned automatically (e.g. assigned by DHCP), the connection may be unavailable. Configure a static IP address.

Method of Choosing Port

Select a method to specify ports.

❏ Service Name

If you select **Service Name** for **Method of Choosing Port**, select an option.

❏ Transport Protocol

If you select **Port Number** for **Method of Choosing Port**, you need to configure an encapsulation mode.

Items	Settings and Explanation
Any Protocol	Select this to control all protocol types.
TCP	Select this to control data for unicast.
UDP	Select this to control data for broadcast and multicast.
ICMPv4	Select this to control ping command.

❏ Local Port

If you select **Port Number** for **Method of Choosing Port** and if you select **TCP** or **UDP** for **Transport Protocol**, enter port numbers to control receiving packets, separating them with commas. You can enter 10 port numbers at the maximum.

Example: 20,80,119,5220

If you do not enter a port number, all ports are controlled.

❏ Remote Port

If you select **Port Number** for **Method of Choosing Port** and if you select **TCP** or **UDP** for **Transport Protocol**, enter port numbers to control sending packets, separating them with commas. You can enter 10 port numbers at the maximum.

Example: 25,80,143,5220

If you do not enter a port number, all ports are controlled.

IKE Version

Select **IKEv1** or **IKEv2** for **IKE Version**. Select one of them according to the device that the printer is connected to.

❏ IKEv1

The following items are displayed when you select **IKEv1** for **IKE Version**.

Items	Settings and Explanation
Authentication Method	If you select **IPsec** for **Access Control**, select an option. Used certificate is common with a default policy.
Pre-Shared Key	If you select **Pre-Shared Key** for **Authentication Method**, enter a pre-shared key between 1 and 127 characters.
Confirm Pre-Shared Key	Enter the key you configured for confirmation.

❏ IKEv2

The following items are displayed when you select **IKEv2** for **IKE Version**.

Items		Settings and Explanation
Local	Authentication Method	If you select **IPsec** for **Access Control**, select an option. Used certificate is common with a default policy.
	ID Type	If you select **Pre-Shared Key** for **Authentication Method**, select the type of ID for the printer.
	ID	Enter the printer's ID that matches the type of ID. You cannot use "@", "#", and "=" for the first character. **Distinguished Name** : Enter 1 to 255 1-byte ASCII (0x20 to 0x7E) characters. You need to include "=". **IP Address** : Enter IPv4 or IPv6 format. **FQDN** : Enter a combination of between 1 and 255 characters using A-Z, a-z, 0-9, "-", and period (.). **Email Address** : Enter 1 to 255 1-byte ASCII (0x20 to 0x7E) characters. You need to include "@". **Key ID** : Enter 1 to 255 1-byte ASCII (0x20 to 0x7E) characters.
	Pre-Shared Key	If you select **Pre-Shared Key** for **Authentication Method**, enter a pre-shared key between 1 and 127 characters.
	Confirm Pre-Shared Key	Enter the key you configured for confirmation.
Remote	Authentication Method	If you select **IPsec** for **Access Control**, select an option. Used certificate is common with a default policy.
	ID Type	If you select **Pre-Shared Key** for **Authentication Method**, select the type of ID for the device that you want to authenticate.
	ID	Enter the printer's ID that matches to the type of ID. You cannot use "@", "#", and "=" for the first character. **Distinguished Name** : Enter 1 to 255 1-byte ASCII (0x20 to 0x7E) characters. You need to include "=". **IP Address** : Enter IPv4 or IPv6 format. **FQDN** : Enter a combination of between 1 and 255 characters using A-Z, a-z, 0-9, "-", and period (.). **Email Address** : Enter 1 to 255 1-byte ASCII (0x20 to 0x7E) characters. You need to include "@". **Key ID** : Enter 1 to 255 1-byte ASCII (0x20 to 0x7E) characters.
	Pre-Shared Key	If you select **Pre-Shared Key** for **Authentication Method**, enter a pre-shared key between 1 and 127 characters.
	Confirm Pre-Shared Key	Enter the key you configured for confirmation.

Encapsulation

If you select **IPsec** for **Access Control**, you need to configure an encapsulation mode.

Items	Settings and Explanation
Transport Mode	If you only use the printer on the same LAN, select this. IP packets of layer 4 or later are encrypted.
Tunnel Mode	If you use the printer on the Internet-capable network such as IPsec-VPN, select this option. The header and data of the IP packets are encrypted. **Remote Gateway(Tunnel Mode)**: If you select **Tunnel Mode** for **Encapsulation**, enter a gateway address between 1 and 39 characters.

Security Protocol

If you select **IPsec** for **Access Control**, select an option.

Items	Settings and Explanation
ESP	Select this to ensure the integrity of an authentication and data, and encrypt data.
AH	Select this to ensure the integrity of an authentication and data. Even if encrypting data is prohibited, you can use IPsec.

Algorithm Settings

It is recommended that you select **Any** for all settings or select an item other than **Any** for each setting. If you select **Any** for some of the settings and select an item other than **Any** for the other settings, the device may not communicate depending on the other device that you want to authenticate.

Items		Settings and Explanation
IKE	Encryption	Select the encryption algorithm for IKE. The items vary depending on the version of IKE.
	Authentication	Select the authentication algorithm for IKE.
	Key Exchange	Select the key exchange algorithm for IKE. The items vary depending on the version of IKE.
ESP	Encryption	Select the encryption algorithm for ESP. This is available when **ESP** is selected for **Security Protocol**.
	Authentication	Select the authentication algorithm for ESP. This is available when **ESP** is selected for **Security Protocol**.
AH	Authentication	Select the encryption algorithm for AH. This is available when **AH** is selected for **Security Protocol**.

Related Information

➡ "Configuring Group Policy" on page 436
➡ "Combination of Local Address(Printer) and Remote Address(Host) on Group Policy" on page 441
➡ "References of Service Name on Group Policy" on page 441

Combination of Local Address(Printer) and Remote Address(Host) on Group Policy

		Setting of Local Address(Printer)		
		IPv4	IPv6*2	Any addresses*3
Setting of Remote Address(Host)	IPv4*1	✓	–	✓
	IPv6*1*2	–	✓	✓
	Blank	✓	✓	✓

*1If **IPsec** is selected for **Access Control**, you cannot specify in a prefix length.

*2If **IPsec** is selected for **Access Control**, you can select a link-local address (fe80::) but group policy will be disabled.

*3Except IPv6 link local addresses.

References of Service Name on Group Policy

Note:
Unavailable services are displayed but cannot be selected.

Service Name	Protocol type	Local port number	Remote port number	Features controlled
Any	–	–	–	All services
ENPC	UDP	3289	Any port	Searching for a printer from applications such as Epson Device Admin, a printer driver and the a scanner driver
SNMP	UDP	161	Any port	Acquiring and configuring of MIB from applications such as Epson Device Admin, the Epson printer driver and the Epson scanner driver
LPR	TCP	515	Any port	Forwarding LPR data
RAW (Port9100)	TCP	9100	Any port	Forwarding RAW data
IPP/IPPS	TCP	631	Any port	Forwarding data of IPP/IPPS printing
WSD	TCP	Any port	5357	Controlling WSD
WS-Discovery	UDP	3702	Any port	Searching for a printer from WSD
Network Scan	TCP	1865	Any port	Forwarding scan data from the scanning software
Network Push Scan	TCP	Any port	2968	Acquiring job information of push scanning from the scanning software
Network Push Scan Discovery	UDP	2968	Any port	Searching for a computer when push scanning from the scanning software is executed
FTP Data (Local)	TCP	20	Any port	FTP server (forwarding data of FTP printing)

Service Name	Protocol type	Local port number	Remote port number	Features controlled
FTP Control (Local)	TCP	21	Any port	FTP server (controlling FTP printing)
FTP Data (Remote)	TCP	Any port	20	FTP client (forwarding scan data and received fax data) However this can control only an FTP server that uses remote port number 20.
FTP Control (Remote)	TCP	Any port	21	FTP client (controlling to forward scan data and received fax data)
CIFS (Local)	TCP	445	Any port	CIFS server (Sharing a network folder)
CIFS (Remote)	TCP	Any port	445	CIFS client (forwarding scan data and received fax data to a folder)
NetBIOS Name Service (Local)	UDP	137	Any port	CIFS server (Sharing a network folder)
NetBIOS Datagram Service (Local)	UDP	138	Any port	
NetBIOS Session Service (Local)	TCP	139	Any port	
NetBIOS Name Service (Remote)	UDP	Any port	137	CIFS client (forwarding scan data and received fax data to a folder)
NetBIOS Datagram Service (Remote)	UDP	Any port	138	
NetBIOS Session Service (Remote)	TCP	Any port	139	
HTTP (Local)	TCP	80	Any port	HTTP(S) server (forwarding data of Web Config and WSD)
HTTPS (Local)	TCP	443	Any port	
HTTP (Remote)	TCP	Any port	80	HTTP(S) client (communicating between Epson Connect, firmware updating and root certificate updating)
HTTPS (Remote)	TCP	Any port	443	

Configuration Examples of IPsec/IP Filtering

Receiving IPsec packets only

This example is to configure a default policy only.

Default Policy:

❏ **IPsec/IP Filtering**: **Enable**

❏ **Access Control**: **IPsec**

❏ **Authentication Method**: **Pre-Shared Key**

❏ **Pre-Shared Key**: Enter up to 127 characters.

Group Policy: Do not configure.

Receiving printing data and printer settings

This example allows communications of printing data and printer configuration from specified services.

Default Policy:

❏ **IPsec/IP Filtering**: **Enable**

❏ **Access Control**: **Refuse Access**

Group Policy:

❏ **Enable this Group Policy**: Check the box.

❏ **Access Control**: **Permit Access**

❏ **Remote Address(Host)**: IP address of a client

❏ **Method of Choosing Port**: **Service Name**

❏ **Service Name**: Check the box of **ENPC**, **SNMP**, **HTTP (Local)**, **HTTPS (Local)** and **RAW (Port9100)**.

Note:
*To avoid receiving HTTP (Local) and HTTPS (Local), clear their checkboxes in **Group Policy**. When doing so, disable IPsec/IP filtering from the printer's control panel temporarily to change the printer settings.*

Receiving access from a specified IP address only

This example allows a specified IP address to access the printer.

Default Policy:

❏ **IPsec/IP Filtering**: **Enable**

❏ **Access Control**:**Refuse Access**

Group Policy:

❏ **Enable this Group Policy**: Check the box.

❏ **Access Control**: **Permit Access**

❏ **Remote Address(Host)**: IP address of an administrator's client

Note:
Regardless of policy configuration, the client will be able to access and configure the printer.

Configuring a Certificate for IPsec/IP Filtering

Configure the Client Certificate for IPsec/IP Filtering. When you set it, you can use the certificate as an authentication method for IPsec/IP Filtering. If you want to configure the certification authority, go to **CA Certificate**.

1. Access Web Config and then select the **Network Security** tab > **IPsec/IP Filtering** > **Client Certificate**.

2. Import the certificate in **Client Certificate**.

   If you have already imported a certificate published by a Certification Authority, you can copy the certificate and use it in IPsec/IP Filtering. To copy, select the certificate from **Copy From**, and then click **Copy**.

Related Information

➡ "Application for Configuring Printer Operations (Web Config)" on page 299
➡ "Configuring a CA-signed Certificate" on page 426
➡ "Configuring a CA Certificate" on page 430

Connecting the Printer to an IEEE802.1X Network

Configuring an IEEE802.1X Network

When you set IEEE802.1X to the printer, you can use it on the network connected to a RADIUS server, a LAN switch with authentication function, or an access point.

1. Access Web Config and then select the **Network Security** tab > **IEEE802.1X** > **Basic**.

2. Enter a value for each item.

   If you want to use the printer on a Wi-Fi network, click **Wi-Fi Setup** and select or enter an SSID.

   Note:
   You can share settings between Ethernet and Wi-Fi.

3. Click **Next**.

   A confirmation message is displayed.

4. Click **OK**.

   The printer is updated.

Related Information

➡ "Application for Configuring Printer Operations (Web Config)" on page 299

IEEE802.1X Network Setting Items

Items	Settings and Explanation
IEEE802.1X (Wired LAN)	You can enable or disable settings of the page (**IEEE802.1X** > **Basic**) for IEEE802.1X (Wired LAN).
IEEE802.1X (Wi-Fi)	The connection status of IEEE802.1X (Wi-Fi) is displayed.
Connection Method	The connection method of a current network is displayed.

Items	Settings and Explanation	
EAP Type	Select an option for an authentication method between the printer and a RADIUS server.	
	EAP-TLS	You need to obtain and import a CA-signed certificate.
	PEAP-TLS	
	EAP-TTLS	You need to configure a password.
	PEAP/MSCHAPv2	
User ID	Configure an ID to use for an authentication of a RADIUS server. Enter 1 to 128 1-byte ASCII (0x20 to 0x7E) characters.	
Password	Configure a password to authenticate the printer. Enter 1 to 128 1-byte ASCII (0x20 to 0x7E) characters. If you are using a Windows server as a RADIUS server, you can enter up to 127 characters.	
Confirm Password	Enter the password you configured for confirmation.	
Server ID	You can configure a server ID to authenticate with a specified RADIUS server. Authenticator verifies whether a server ID is contained in the subject/subjectAltName field of a server certificate that is sent from a RADIUS server or not. Enter 0 to 128 1-byte ASCII (0x20 to 0x7E) characters.	
Certificate Validation	You can set certificate validation regardless of the authentication method. Import the certificate in **CA Certificate**.	
Anonymous Name	If you select **PEAP-TLS**, **EAP-TTLS** or **PEAP/MSCHAPv2** for **EAP Type**, you can configure an anonymous name instead of a user ID for a phase 1 of a PEAP authentication. Enter 0 to 128 1-byte ASCII (0x20 to 0x7E) characters.	
Encryption Strength	You can select one of the followings.	
	High	AES256/3DES
	Middle	AES256/3DES/AES128/RC4

Related Information

➡ "Configuring an IEEE802.1X Network" on page 444

Configuring a Certificate for IEEE802.1X

Configure the Client Certificate for IEEE802.1X. When you set it, you can use **EAP-TLS** and **PEAP-TLS** as an authentication method of IEEE802.1x. If you want to configure the certification authority certificate, go to **CA Certificate**.

1. Access Web Config and then select the **Network Security** tab > **IEEE802.1X** > **Client Certificate**.

2. Enter a certificate in the **Client Certificate**.

   If you have already imported a certificate published by a Certification Authority, you can copy the certificate and use it in IEEE802.1X. To copy, select the certificate from **Copy From**, and then click **Copy**.

Related Information

➡ "Application for Configuring Printer Operations (Web Config)" on page 299
➡ "Configuring a CA-signed Certificate" on page 426
➡ "Configuring a CA Certificate" on page 430

Checking IEEE802.1X Network Status

You can check the IEEE802.1X status by printing a network status sheet.

Status ID	IEEE802.1X Status
Disable	IEEE802.1X feature is disable.
EAP Success	IEEE802.1X authentication has succeeded and network connection is available.
Authenticating	IEEE802.1X authentication has not been completed.
Config Error	Authentication has failed since the user ID has not been set.
Client Certificate Error	Authentication has failed since the client certificate is out of date.
Timeout Error	Authentication has failed since there is no answer from the RADIUS server and/or authenticator.
User ID Error	Authentication has failed since the printer's user ID and/or certificate protocol is incorrect.
Server ID Error	Authentication has failed since the server ID of the server certificate and the server's ID do not match.
Server Certificate Error	Authentication has failed since there are the following errors in the server certificate. ❏ The server certificate is out of date. ❏ The chain of the server certificate is incorrect.
CA Certificate Error	Authentication has failed since there are the following errors in a CA certificate. ❏ Specified CA certificate is incorrect. ❏ The correct CA certificate is not imported. ❏ CA certificate is out of date.
EAP Failure	Authentication has failed since there are the following errors in the printer settings. ❏ If **EAP Type** is **EAP-TLS** or **PEAP-TLS**, client certificate is incorrect or has certain problems. ❏ If **EAP Type** is **EAP-TTLS** or **PEAP/MSCHAPv2**, user ID or password is not correct.

Related Information

➡ "Printing a Network Status Sheet" on page 284

Solving Problems for Advanced Security

Restoring the Security Settings

When you establish a highly secure environment such as IPsec/IP Filtering or IEEE802.1X, you may not be able to communicate with devices because of incorrect settings or trouble with the device or server. In this case, restore the security settings in order to make settings for the device again or to allow you temporary use.

Disabling the Security Function Using the Control Panel

You can disable IPsec/IP Filtering or IEEE802.1X using the printer's control panel.

1. Select **Settings** > **General Settings** > **Network Settings**.
2. Select **Advanced**.
3. Select from the following items that you want to disable.
   - ❏ **Disable IPsec/IP Filtering**
   - ❏ **Disable IEEE802.1X**
4. Select **Start Setup** on the confirmation screen.

Problems Using Network Security Features

Forgot a Pre–shared Key

Re-configure a pre-shared key.

To change the key, access Web Config and select the **Network Security** tab > **IPsec/IP Filtering** > **Basic** > **Default Policy** or **Group Policy**.

When you change the pre-shared key, configure the pre-shared key for computers.

Related Information

➡ "Application for Configuring Printer Operations (Web Config)" on page 299
➡ "Encrypted Communication Using IPsec/IP Filtering" on page 432

Cannot Communicate with IPsec Communication

Specify the algorithm that the printer or the computer does not support.

The printer supports the following algorithms. Check the settings of the computer.

Security Methods	Algorithms
IKE encryption algorithm	AES-CBC-128, AES-CBC-192, AES-CBC-256, AES-GCM-128*, AES-GCM-192*, AES-GCM-256*, 3DES

Security Methods	Algorithms
IKE authentication algorithm	SHA-1, SHA-256, SHA-384, SHA-512, MD5
IKE key exchange algorithm	DH Group1, DH Group2, DH Group5, DH Group14, DH Group15, DH Group16, DH Group17, DH Group18, DH Group19, DH Group20, DH Group21, DH Group22, DH Group23, DH Group24, DH Group25, DH Group26, DH Group27*, DH Group28*, DH Group29*, DH Group30*
ESP encryption algorithm	AES-CBC-128, AES-CBC-192, AES-CBC-256, AES-GCM-128, AES-GCM-192, AES-GCM-256, 3DES
ESP authentication algorithm	SHA-1, SHA-256, SHA-384, SHA-512, MD5
AH authentication algorithm	SHA-1, SHA-256, SHA-384, SHA-512, MD5

*available for IKEv2 only

Related Information

➡ "Encrypted Communication Using IPsec/IP Filtering" on page 432

Cannot Communicate Suddenly

The IP address of the printer has been changed or cannot be used.

When the IP address registered to the local address on Group Policy has been changed or cannot be used, IPsec communication cannot be performed. Disable IPsec using the printer's control panel.

If the DHCP is out of date, rebooting or the IPv6 address is out of date or has not been obtained, then the IP address registered for the printer's Web Config (**Network Security** tab > **IPsec/IP Filtering** > **Basic** > **Group Policy** > **Local Address(Printer)**) may not be found.

Use a static IP address.

The IP address of the computer has been changed or cannot be used.

When the IP address registered to the remote address on Group Policy has been changed or cannot be used, IPsec communication cannot be performed.

Disable IPsec using the printer's control panel.

If the DHCP is out of date, rebooting or the IPv6 address is out of date or has not been obtained, then the IP address registered for the printer's Web Config (**Network Security** tab > **IPsec/IP Filtering** > **Basic** > **Group Policy** > **Remote Address(Host)**) may not be found.

Use a static IP address.

Related Information

➡ "Application for Configuring Printer Operations (Web Config)" on page 299
➡ "Encrypted Communication Using IPsec/IP Filtering" on page 432

Cannot Create the Secure IPP Printing Port

The correct certificate is not specified as the server certificate for SSL/TLS communication.

If the specified certificate is not correct, creating a port may fail. Make sure you are using the correct certificate.

The CA certificate is not imported to the computer accessing the printer.

If a CA certificate is not imported to the computer, creating a port may fail. Make sure a CA certificate is imported.

Related Information

➡ "Configuring a Server Certificate for the Printer" on page 432

Cannot Connect After Configuring IPsec/IP Filtering

The settings of IPsec/IP Filtering are incorrect.

Disable IPsec/IP filtering from the printer's control panel. Connect the printer and computer and make the IPsec/IP Filtering settings again.

Related Information

➡ "Encrypted Communication Using IPsec/IP Filtering" on page 432

Cannot Access the Printer or Scanner after Configuring IEEE802.1X

The settings of IEEE802.1X are incorrect.

Disable IEEE802.1X and Wi-Fi from the printer's control panel. Connect the printer and a computer, and then configure IEEE802.1X again.

Related Information

➡ "Configuring an IEEE802.1X Network" on page 444

Problems on Using a Digital Certificate

Cannot Import a CA-signed Certificate

CA-signed Certificate and the information on the CSR do not match.

If the CA-signed Certificate and CSR do not have the same information, the CSR cannot be imported. Check the following:

- ❏ Are you trying to import the certificate to a device that does not have the same information?
  Check the information of the CSR and then import the certificate to a device that has the same information.
- ❏ Did you overwrite the CSR saved into the printer after sending the CSR to a certificate authority?
  Obtain the CA-signed certificate again with the CSR.

CA-signed Certificate is more than 5KB.

You cannot import a CA-signed Certificate that is more than 5KB.

The password for importing the certificate is incorrect.

Enter the correct password. If you forget the password, you cannot import the certificate. Re-obtain the CA-signed Certificate.

Related Information

➡ "Importing a CA-signed Certificate" on page 428

Cannot Update a Self-Signed Certificate

The Common Name has not been entered.

Common Name must be entered.

Unsupported characters have been entered to Common Name.

Enter between 1 and 128 characters of either IPv4, IPv6, host name, or FQDN format in ASCII (0x20-0x7E).

A comma or space is included in the common name.

If a comma is entered, the **Common Name** is divided at that point. If only a space is entered before or after a comma, an error occurs.

Related Information

➡ "Updating a Self-signed Certificate" on page 430

Cannot Create a CSR

The Common Name has not been entered.

The **Common Name** must be entered.

Unsupported characters have been entered to Common Name, Organization, Organizational Unit, Locality, and State/Province.

Enter characters of either IPv4, IPv6, host name, or FQDN format in ASCII (0x20-0x7E).

A comma or space is included in the Common Name.

If a comma is entered, the **Common Name** is divided at that point. If only a space is entered before or after a comma, an error occurs.

Related Information

➡ "Obtaining a CA-signed Certificate" on page 426

Warning Relating to a Digital Certificate Appears

Messages	Cause/What to do
Enter a Server Certificate.	**Cause:** You have not selected a file to import. **What to do:** Select a file and click **Import**.
CA Certificate 1 is not entered.	**Cause:** CA certificate 1 is not entered and only CA certificate 2 is entered. **What to do:** Import CA certificate 1 first.
Invalid value below.	**Cause:** Unsupported characters are contained in the file path and/or password. **What to do:** Make sure that the characters are entered correctly for the item.
Invalid date and time.	**Cause:** Date and time for the printer have not been set. **What to do:** Set date and time using Web Config, EpsonNet Config or the printer's control panel.
Invalid password.	**Cause:** The password set for CA certificate and entered password do not match. **What to do:** Enter the correct password.
Invalid file.	**Cause:** You are not importing a certificate file in X509 format. **What to do:** Make sure that you are selecting the correct certificate sent by a trusted certificate authority.
	Cause: The file you have imported is too large. The maximum file size is 5KB. **What to do:** If you select the correct file, the certificate might be corrupted or fabricated.
	Cause: The chain contained in the certificate is invalid. **What to do:** For more information on the certificate, see the website of the certificate authority.

Messages	Cause/What to do
Cannot use the Server Certificates that include more than three CA certificates.	**Cause:** The certificate file in PKCS#12 format contains more than 3 CA certificates. **What to do:** Import each certificate as converting from PKCS#12 format to PEM format, or import the certificate file in PKCS#12 format that contains up to 2 CA certificates.
The certificate has expired. Check if the certificate is valid, or check the date and time on your printer.	**Cause:** The certificate is out of date. **What to do:** ❏ If the certificate is out of date, obtain and import the new certificate. ❏ If the certificate is not out of date, make sure the printer's date and time are set correctly.
Private key is required.	**Cause:** There is no paired private key with the certificate. **What to do:** ❏ If the certificate is the PEM/DER format and it is obtained from a CSR using a computer, specify the private key file. ❏ If the certificate is the PKCS#12 format and it is obtained from a CSR using a computer, create a file that contains the private key.
	Cause: You have re-imported the PEM/DER certificate obtained from a CSR using Web Config. **What to do:** If the certificate is the PEM/DER format and it is obtained from a CSR using Web Config, you can only import it once.
Setup failed.	**Cause:** Cannot finish the configuration because the communication between the printer and computer failed or the file cannot be read by some errors. **What to do:** After checking the specified file and communication, import the file again.

Related Information

➡ "About Digital Certification" on page 426

Delete a CA-signed Certificate by Mistake

There is no backup file for the CA-signed certificate.

If you have the backup file, import the certificate again.

If you obtain a certificate using a CSR created from Web Config, you cannot import a deleted certificate again. Create a CSR and obtain a new certificate.

Related Information

➡ "Importing a CA-signed Certificate" on page 428
➡ "Deleting a CA-signed Certificate" on page 429

Where to Get Help

Technical Support Web Site. 455

Contacting Epson Support. 455

Technical Support Web Site

If you need further help, visit the Epson support website shown below. Select your country or region and go to the support section of your local Epson website. The latest drivers, FAQs, manuals, or other downloadables are also available from the site.

http://support.epson.net/

http://www.epson.eu/Support (Europe)

If your Epson product is not operating properly and you cannot solve the problem, contact Epson support services for assistance.

Contacting Epson Support

Before Contacting Epson

If your Epson product is not operating properly and you cannot solve the problem using the troubleshooting information in your product manuals, contact Epson support services for assistance. If Epson support for your area is not listed below, contact the dealer where you purchased your product.

Epson support will be able to help you much more quickly if you give them the following information:

- ❏ Product serial number

  (The serial number label is usually on the back of the product.)
- ❏ Product model
- ❏ Product software version

  (Click **About**, **Version Info**, or a similar button in the product software.)
- ❏ Brand and model of your computer
- ❏ Your computer operating system name and version
- ❏ Names and versions of the software applications you normally use with your product

Note:
Depending on the product, the dial list data for fax and/or network settings may be stored in the product's memory. Due to breakdown or repair of a product, data and/or settings may be lost. Epson shall not be responsible for the loss of any data, for backing up or recovering data and/or settings even during a warranty period. We recommend that you make your own backup data or take notes.

Help for Users in Europe

Check your Pan-European Warranty Document for information on how to contact Epson support.

Help for Users in Australia

Epson Australia wishes to provide you with a high level of customer service. In addition to your product manuals, we provide the following sources for obtaining information:

Internet URL

http://www.epson.com.au

Access the Epson Australia World Wide Web pages. Worth taking your modem here for the occasional surf! The site provides a download area for drivers, Epson contact points, new product information and technical support (e-mail).

Epson Helpdesk

Phone: 1300-361-054

Epson Helpdesk is provided as a final backup to make sure our clients have access to advice. Operators on the Helpdesk can aid you in installing, configuring and operating your Epson product. Our Pre-sales Helpdesk staff can provide literature on new Epson products and advise where the nearest dealer or service agent is located. Many types of queries are answered here.

We encourage you to have all the relevant information on hand when you ring. The more information you prepare, the faster we can help solve the problem. This information includes your Epson product manuals, type of computer, operating system, application programs, and any information you feel is required.

Transportation of Product

Epson recommends retaining product packaging for future transportation. Securing the ink tank with tape and keeping the product upright is also recommended.

Help for Users in New Zealand

Epson New Zealand wishes to provide you with a high level of customer service. In addition to your product documentation, we provide the following sources for obtaining information:

Internet URL

http://www.epson.co.nz

Access the Epson New Zealand World Wide Web pages. Worth taking your modem here for the occasional surf! The site provides a download area for drivers, Epson contact points, new product information and technical support (e-mail).

Epson Helpdesk

Phone: 0800 237 766

Epson Helpdesk is provided as a final backup to make sure our clients have access to advice. Operators on the Helpdesk can aid you in installing, configuring and operating your Epson product. Our Pre-sales Helpdesk staff can provide literature on new Epson products and advise where the nearest dealer or service agent is located. Many types of queries are answered here.

We encourage you to have all the relevant information on hand when you ring. The more information you prepare, the faster we can help solve the problem. This information includes your Epson product documentation, type of computer, operating system, application programs, and any information you feel is required.

Transportation of Product

Epson recommends retaining product packaging for future transportation. Securing the ink tank with tape and keeping the product upright is also recommended.

Help for Users in Indonesia

Contacts for information, support, and services are:

World Wide Web

http://www.epson.co.id

❏ Information on product specifications, drivers for download

❏ Frequently Asked Questions (FAQ), Sales Enquiries, questions through e-mail

Epson Hotline

Phone: +62-1500-766

Fax: +62-21-808-66-799

Our Hotline team can help you with the following over the phone or fax:

❏ Sales enquiries and product information

❏ Technical support

Epson Service Center

Province	Company Name	Address	Phone E-mail
DKI JAKARTA	ESS JAKARTA MANGGADUA	Ruko Mall Mangga Dua No. 48 Jl. Arteri Mangga Dua, Jakarta Utara - DKI JAKARTA	(+6221) 62301104 jkt-admin@epson-indonesia.co.id
NORTH SUMATERA	ESC MEDAN	Jl. Bambu 2 Komplek Graha Niaga Nomor A-4, Medan - North Sumatera	(+6261) 42066090 / 42066091 mdn-adm@epson-indonesia.co.id
WEST JAWA	ESC BANDUNG	Jl. Cihampelas No. 48 A Bandung Jawa Barat 40116	(+6222) 4207033 bdg-admin@epson-indonesia.co.id
DI YOGYAKARTA	ESC YOGYAKARTA	YAP Square, Block A No. 6 Jl. C Simanjutak Yogyakarta - DIY	(+62274) 581065 ygy-admin@epson-indonesia.co.id
EAST JAWA	ESC SURABAYA	Hitech Mall Lt. 2 Block A No. 24 Jl. Kusuma Bangsa No. 116 - 118 Surabaya - JATIM	(+6231) 5355035 sby-admin@epson-indonesia.co.id
SOUTH SULAWESI	ESC MAKASSAR	Jl. Cendrawasih NO. 3A, kunjung mae, mariso, MAKASSAR - SULSEL 90125	(+62411) 8911071 mksr-admin@epson-indonesia.co.id
WEST KALIMANTAN	ESC PONTIANAK	Komp. A yani Sentra Bisnis G33, Jl. Ahmad Yani - Pontianak Kalimantan Barat	(+62561) 735507 / 767049 pontianak-admin@epson-indonesia.co.id
RIAU	ESC PEKANBARU	Jl. Tuanku Tambusai No.459A Pekanbaru Riau	(+62761) 8524695 pkb-admin@epson-indonesia.co.id

Province	Company Name	Address	Phone E-mail
DKI JAKARTA	ESS JAKARTA SUDIRMAN	Wisma Keiai Lt. 1 Jl. Jenderal Sudirman Kav. 3 Jakarta Pusat - DKI JAKARTA 10220	(+6221) 5724335 ess@epson-indonesia.co.id
EAST JAWA	ESS SURABAYA	Ruko Surya Inti Jl. Jawa No 2-4 Kav. 29 Surabaya - Jawa Timur	(+6231) 5014949 esssby@epson-indonesia.co.id
BANTEN	ESS SERPONG	Ruko Mall WTC Matahari No. 953, Serpong-Banten	(+6221) 53167051 / 53167052 esstag@epson-indonesia.co.id
CENTRAL JAWA	ESS SEMARANG	Komplek Ruko Metro Plaza Block C20 Jl. MT Haryono No 970 Semarang - JAWA TENGAH	(+6224) 8313807 / 8417935 esssmg@epson-indonesia.co.id
EAST KALIMANTAN	ESC SAMARINDA	Jl. KH. Wahid Hasyim (M. Yamin) Kelurahan Sempaja Selatan Kecamatan Samarinda UTARA - SAMARINDA - KALTIM	(+62541) 7272904 escsmd@epson-indonesia.co.id
SOUTH SUMATERA	ESC PALEMBANG	Jl. H.M Rasyid Nawawi No. 249 Kelurahan 9 Ilir Palembang Sumatera Selatan	(+62711) 311330 escplg@epson-indonesia.co.id
EAST JAVA	ESC JEMBER	JL. Panglima Besar Sudirman Ruko no.1D Jember-Jawa Timur (Depan Balai Penelitian & Pengolahan Kakao)	(+62331) 488373 / 486468 jmr-admin@epson-indonesia.co.id
NORTH SULAWESI	ESC MANADO	Tekno Megamall Lt LG 11 TK 21, Kawasan Megamas Boulevard, Jl Piere Tendean, Manado - SULUT 95111	(+62431) 8890996 MND-ADMIN@EPSON-INDONESIA.CO.ID

For other cities not listed here, call the Hot Line: 08071137766.

Help for Users in Malaysia

Contacts for information, support, and services are:

World Wide Web

http://www.epson.com.my

- ❏ Information on product specifications, drivers for download
- ❏ Frequently Asked Questions (FAQ), Sales Enquiries, questions through e-mail

Epson Call Centre

Phone: +60 1800-8-17349

- ❏ Sales enquiries and product information
- ❏ Product usage questions or problems
- ❏ Enquiries on repair services and warranty

Head Office

Phone: 603-56288288

Fax: 603-5628 8388/603-5621 2088

Help for Users in the Philippines

To obtain technical support as well as other after sales services, users are welcome to contact the Epson Philippines Corporation at the telephone, fax numbers and e-mail address below:

World Wide Web

http://www.epson.com.ph

Information on product specifications, drivers for download, Frequently Asked Questions (FAQ), and E-mail Enquiries are available.

Epson Philippines Customer Care

Toll Free: (PLDT) 1-800-1069-37766

Toll Free: (Digital) 1-800-3-0037766

Metro Manila: (+632)441-9030

Web Site: https://www.epson.com.ph/contact

E-mail: customercare@epc.epson.som.ph

Accessible 9am to 6pm, Monday through Saturday (Except public holidays)

Our Customer Care team can help you with the following over the phone:

- ❏ Sales enquiries and product information
- ❏ Product usage questions or problems
- ❏ Enquiries on repair service and warranty

Epson Philippines Corporation

Trunk Line: +632-706-2609

Fax: +632-706-2663

Help for Users in Singapore

Sources of information, support, and services available from Epson Singapore are:

World Wide Web

http://www.epson.com.sg

Information on product specifications, drivers for download, Frequently Asked Questions (FAQ), Sales Enquiries, and Technical Support via e-mail are available.

Epson HelpDesk

Toll Free: 800-120-5564

Our HelpDesk team can help you with the following over the phone:

- ❏ Sales enquiries and product information

❏ Product usage questions or problem troubleshooting

❏ Enquiries on repair service and warranty

Help for Users in Thailand

Contacts for information, support, and services are:

World Wide Web

http://www.epson.co.th

Information on product specifications, drivers for download, Frequently Asked Questions (FAQ), and e-mail are available.

Epson Call Centre

Phone: 66-2685-9899

Email: support@eth.epson.co.th

Our Call Centre team can help you with the following over the phone:

❏ Sales enquiries and product information

❏ Product usage questions or problems

❏ Enquiries on repair service and warranty

Help for Users in Vietnam

Contacts for information, support, and services are:

Epson Service Center

65 Truong Dinh Street, District 1, Hochiminh City, Vietnam.

Phone(Ho Chi Minh City): 84-8-3823-9239, 84-8-3825-6234

29 Tue Tinh, Quan Hai Ba Trung, Hanoi City, Vietnam

Phone(Hanoi City): 84-4-3978-4785, 84-4-3978-4775