Lenovo

ThinkSystem SR645
Maintenance Manual

Machine Types: 7D2X and 7D2Y

Note

Before using this information and the product it supports, be sure to read and understand the safety information and the safety instructions, which are available at:
http://thinksystem.lenovofiles.com/help/topic/safety_documentation/pdf_files.html

In addition, ensure that you are familiar with the terms and conditions of the Lenovo warranty for your server, which can be found at:
http://datacentersupport.lenovo.com/warrantylookup

First Edition (June 2020)

© Copyright Lenovo 2020.

LIMITED AND RESTRICTED RIGHTS NOTICE: If data or software is delivered pursuant to a General Services Administration (GSA) contract, use, reproduction, or disclosure is subject to restrictions set forth in Contract No. GS-35F-05925.

Contents

Safety v
Safety inspection checklist vi

Chapter 1. Introduction 1
Specifications 3
Firmware updates 8
Tech Tips 11
Security advisories 11
Power on the server 12
Power off the server 12

Chapter 2. Server components 13
Front view 13
Diagnostics panel 25
LCD diagnostics panel/handset 27
Rear view 34
Rear view LEDs 41
System board components 43
System board LEDs 45
Switch block and jumper 48
Parts list. 50
Power cords 54

Chapter 3. Internal cable routing . . . 55
CFF RAIR/HBA adapter cabling routing 58
FIO cable routing 59
Intrusion switch cable routing 60
Super capacitor cable routing 61
7mm drive backplane cable routing (power & signal) 63
M.2 drive backplane cable routing (power & signal) 64
2.5-inch/3.5-inch drive backplane (power) 65
2.5-inch/3.5-inch drive backplane (signal). 66
4 x 2.5-inch front drive bays (SAS/SATA) . . . 67
8 x 2.5-inch front drive bays (SAS/SATA) . . . 68
4 x 3.5-inch front drive bays (SAS/SATA) . . . 71
4 x 3.5-inch front drive bays (AnyBay) 75
10 x 2.5-inch front drive bays (AnyBay) 79
10 x 2.5-inch front drive bays (NVMe) 81
10 x 2.5-inch front drive bays (8AnyBay + 2NVMe) 84
10 x 2.5-inch front drive bays (6SAS/SATA + 4AnyBay) 86
10 x 2.5-inch front drive bays (6SAS/SATA + 4NVMe) 90
10 x 2.5-inch front drive bays (6 SAS/SATA + 2 AnyBay + 2 NVMe) 92

Chapter 4. Hardware replacement procedures 95
Installation Guidelines 95
System reliability guidelines 96
Working inside the server with the power on . . 96
Handling static-sensitive devices 97
Technical rules 98
Technical rules for processors and heat sinks 98
Drive bay configurations and requirements . . 99
Technical rules for DIMMs 101
Technical rules for PCIe adapters 103
Technical rules for GPU adapters 105
Technical rules for system fans 105
Environmental restrictions 105
Air baffle replacement 107
Remove the air baffle 107
Install the air baffle 109
CMOS battery replacement 111
Remove the CMOS battery 111
Install the CMOS battery 114
Front I/O assembly replacement 116
Remove the front I/O assembly 117
Install the front I/O assembly 118
Remove the LCD diagnostics panel assembly 120
Install the LCD diagnostics panel assembly 121
Hot-swap drive replacement 123
Remove a hot-swap drive 123
Install a hot-swap drive 125
Backplane replacement. 127
Remove the front 2.5-inch-drive backplane 127
Install the front 2.5-inch-drive backplane . . . 129
Remove the front 3.5-inch-drive backplane 131
Install the front 3.5-inch-drive backplane . . . 133
Remove the 2.5-inch rear drive backplane. . . 135
Install the rear backplane 137
Remove the 7mm drive backplane. 139
Install the 7mm drive backplanes 142
Hot-swap rear drive assembly replacement 144
Remove the hot-swap rear drive assembly . . 144
Install the hot-swap rear drive assembly . . . 146
Hot–swap power supply unit replacement 149
Remove a hot-swap power supply unit 150

© Copyright Lenovo 2020

Install a hot-swap power supply 157
Internal CFF RAID/HBA adapter replacement . . . 165
Remove the internal CFF RAID/HBA adapter 165
Install the internal CFF RAID/HBA adapter. . . 167
Intrusion switch replacement 168
Remove an intrusion switch 168
Install an intrusion switch 170
Memory module replacement 171
Remove a memory module 171
Memory module installation rules 173
Install a memory module 174
M.2 adapter and M.2 drive replacement 177
Remove the M.2 adapter and M.2 drive. . . . 177
Adjust the retainer on the M.2 adapter 180
Install the M.2 adapter and M.2 drive. 181
OCP 3.0 Ethernet adapter replacement 184
Remove the OCP 3.0 Ethernet adapter 184
Install the OCP 3.0 Ethernet adapter 185
PCIe adapter replacement. 187
Remove a PCIe adapter 187
Install a PCIe adapter 189
Processor and heat sink replacement 191
Remove a standard heat sink. 191
Remove a T-shaped heat sink 193
Remove a processor 195
Install a processor 196
Install a standard heat sink. 198
Install a T-shaped heat sink 200
Rack latches replacement. 202
Remove the rack latches 202
Install the rack latches 204
RAID super capacitor module replacement 206
Remove the RAID super capacitor module on the chassis 207
Install the RAID super capacitor module on the chassis 209
Remove the RAID super capacitor module on the air baffle 212
Install the RAID super capacitor module on the air baffle 213
Remove the RAID super capacitor module on the riser 215
Install the RAID super capacitor module on the riser 216
Riser card replacement 218
Remove a riser card 218
Install a riser card 221
System fan replacement 223
Remove a system fan. 223
Install a system fan. 225
Security bezel replacement 227
Remove the security bezel 227
Install the security bezel 229
System board replacement 231
Remove the system board 231
Install the system board 233
Update the Universal Unique Identifier (UUID). 235
Update the DMI/SMBIOS data 235
Enable TPM 235
Enable UEFI Secure Boot 236
Top cover replacement 237
Remove the top cover 237
Install the top cover 239
Complete the parts replacement 241

Chapter 5. Problem determination 243
Event logs 243
Light path diagnostics 244
General problem determination procedures 244
Resolving suspected power problems 244
Resolving suspected Ethernet controller problems 245
Troubleshooting by symptom 245
Power on and power off problems. 246
Memory problems 247
Hard disk drive problems 249
Monitor and video problems 250
Keyboard, mouse, KVM switch or USB-device problems 252
Optional-device problems 253
Serial-device problems 254
Intermittent problems. 255
Power problems. 256
Network problems 256
Observable problems. 257
Software problems. 259

Appendix A. Hardware disassembling for recycle 261
Disassembling the system board for recycle. . . . 261

Appendix B. Getting help and technical assistance 263
Before you call 263
Collecting service data 264
Contacting Support 264

Appendix C. Notices. 265
Trademarks 266

Important notes 266
Particulate contamination 266
Telecommunication regulatory statement 267
Electronic emission notices 267
Taiwan BSMI RoHS declaration 268
Taiwan import and export contact information . . . 268
Index 269

© Copyright Lenovo 2020

Safety

Before installing this product, read the Safety Information.

قبل تركيب هذا المنتج، يجب قراءة الملاحظات الآمنية

Antes de instalar este produto, leia as Informações de Segurança.

在安装本产品之前，请仔细阅读 Safety Information （安全信息）。

安裝本產品之前，請先閱讀「安全資訊」。

Prije instalacije ovog produkta obavezno pročitajte Sigurnosne Upute.

Před instalací tohoto produktu si přečtěte příručku bezpečnostních instrukcí.

Læs sikkerhedsforskrifterne, før du installerer dette produkt.

Lees voordat u dit product installeert eerst de veiligheidsvoorschriften.

Ennen kuin asennat tämän tuotteen, lue turvaohjeet kohdasta Safety Information.

Avant d'installer ce produit, lisez les consignes de sécurité.

Vor der Installation dieses Produkts die Sicherheitshinweise lesen.

Πριν εγκαταστήσετε το προϊόν αυτό, διαβάστε τις πληροφορίες ασφάλειας
(safety information).

לפני שתתקינו מוצר זה, קראו את הוראות הבטיחות.

A termék telepítése előtt olvassa el a Biztonsági előírásokat!

Prima di installare questo prodotto, leggere le Informazioni sulla Sicurezza.

製品の設置の前に、安全情報をお読みください。

본 제품을 설치하기 전에 안전 정보를 읽으십시오.

Пред да се инсталира овој продукт, прочитајте информацијата за безбедност.

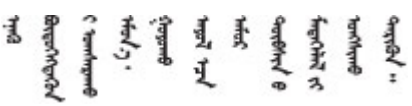

Les sikkerhetsinformasjonen (Safety Information) før du installerer dette produktet.

Przed zainstalowaniem tego produktu, należy zapoznać się
z książką "Informacje dotyczące bezpieczeństwa" (Safety Information).

Antes de instalar este produto, leia as Informações sobre Segurança.

© Copyright Lenovo 2020

Перед установкой продукта прочтите инструкции по технике безопасности.

Pred inštaláciou tohto zariadenia si pečítaje Bezpečnostné predpisy.

Pred namestitvijo tega proizvoda preberite Varnostne informacije.

Antes de instalar este producto, lea la información de seguridad.

Läs säkerhetsinformationen innan du installerar den här produkten.

ཐོན་རྫས་འདི་བདེ་སྤྱོད་མ་བྱས་གོང་། ་སྐོར་གྱི་ཡིད་གཟབ་བྱ་འདྲ་མིན་ཡོད་པའི་འོད་སྡེར་བལྟ་དགོས།

Bu ürünü kurmadan önce güvenlik bilgilerini okuyun.

مەزكۇر مەھسۇلاتنى ئورنىتىشتىن بۇرۇن بىخەتەرلىك ئۇچۇرلىرىنى ئوقۇپ چىقىڭ.

Youq mwngz yungh canjbinj neix gaxgonq, itdingh aeu doeg aen canjbinj soengq cungj vahgangj ancien siusik.

Safety inspection checklist

Use the information in this section to identify potentially unsafe conditions with your server. As each machine was designed and built, required safety items were installed to protect users and service technicians from injury.

CAUTION:
This equipment must be installed or serviced by trained personnel, as defined by the NEC, IEC 62368-1 & IEC 60950-1, the standard for Safety of Electronic Equipment within the Field of Audio/Video, Information Technology and Communication Technology. Lenovo assumes you are qualified in the servicing of equipment and trained in recognizing hazards energy levels in products. Access to the equipment is by the use of a tool, lock and key, or other means of security, and is controlled by the authority responsible for the location.

Important: Electrical grounding of the server is required for operator safety and correct system function. Proper grounding of the electrical outlet can be verified by a certified electrician.

Use the following checklist to verify that there are no potentially unsafe conditions:

1. Make sure that the power is off and the power cord is disconnected.
2. Check the power cord.
   - Make sure that the third-wire ground connector is in good condition. Use a meter to measure third-wire ground continuity for 0.1 ohm or less between the external ground pin and the frame ground.
   - Make sure that the power cord is the correct type.

     To view the power cords that are available for the server:

     a. Go to:

        http://dcsc.lenovo.com/#/

     b. In the Customize a Model pane:

        1) Click **Select Options/Parts for a Model**.
        2) Enter the machine type and model for your server.

c. Click the Power tab to see all line cords.

- Make sure that the insulation is not frayed or worn.

3. Check for any obvious non-Lenovo alterations. Use good judgment as to the safety of any non-Lenovo alterations.
4. Check inside the server for any obvious unsafe conditions, such as metal filings, contamination, water or other liquid, or signs of fire or smoke damage.
5. Check for worn, frayed, or pinched cables.
6. Make sure that the power-supply cover fasteners (screws or rivets) have not been removed or tampered with.

© Copyright Lenovo 2020

Chapter 1. Introduction

The ThinkSystem™ SR645 server is a 2-socket 1U server that features the new AMD® EPYC™ 7002 family of processors. The server offers a broad selection of drive and slot configurations and offers high performance and expansion for various IT workloads. Combining performance and flexibility, the server is a great choice for enterprises of all sizes.

Performance, ease of use, reliability, and expansion capabilities were key considerations in the design of the server. These design features make it possible for you to customize the system hardware to meet your needs today and provide flexible expansion capabilities for the future.

The server comes with a limited warranty. For details about the warranty, see:
https://support.lenovo.com/us/en/solutions/ht503310

For details about your specific warranty, see:
http://datacentersupport.lenovo.com/warrantylookup

Identifying your server

When you contact Lenovo for help, the machine type and serial number information helps support technicians to identify your server and provide faster service.

The machine type and serial number are on the ID label on the right rack latch in the front of the server.

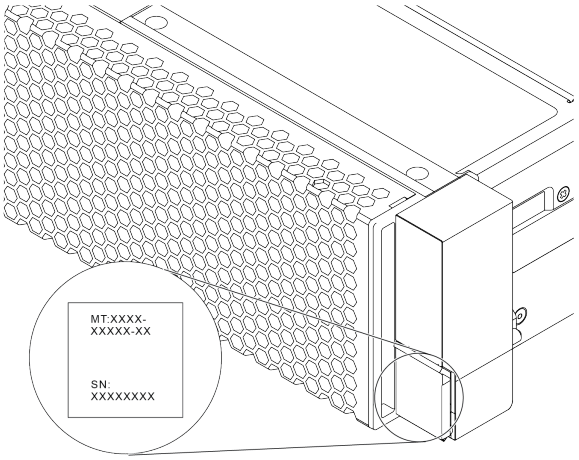

Figure 1. Location of the ID label

XClarity Controller network access label

The XClarity® Controller network access label is attached on the top side of the pull-out information tab as shown. After you get the server, peel the XClarity Controller network access label away and store it in a safe place for future use.

Note: The pull-out information tab is located on the right bottom of the front side of your server. For detailed information, see Front view

© Copyright Lenovo 2020

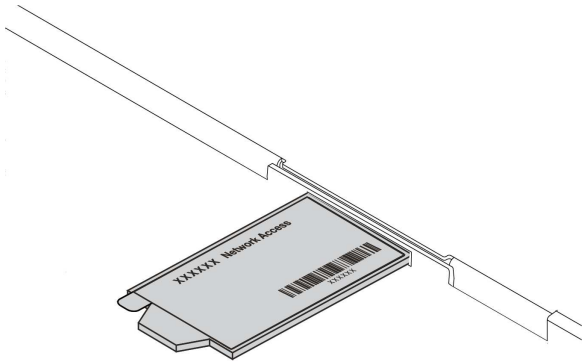

Figure 2. Location of the XClarity Controller network access label

Quick response code

The system service label, which is on the top cover, provides a quick response (QR) code for mobile access to service information. Scan the QR code with a mobile device and a QR code reader application to get quick access to the Lenovo Service Web site for this server. The Lenovo Service Information Web site provides additional information for parts installation and replacement videos, and error codes for server support.

The following illustration shows the QR code: https://datacentersupport.lenovo.com/products/servers/thinksystem/sr645/7d2x

Figure 3. QR code

Specifications

The following information is a summary of the features and specifications of the server. Depending on the model, some features might not be available, or some specifications might not apply.

Table 1. Server specifications

Specification	Description
Dimension	• 1U • Height: 43.0 mm (1.69 inches) • Width: – With rack latches: 481.7mm (18.96 inches) – Without rack latches: 445 mm (17.52 inches) • Depth: 771.8 mm (30.39 inches) **Note:** The depth is measured with rack latches installed, but without security bezel installed.
Package weight	Up to 20.23 kg (44.56 lb)
Processor	• Up to two AMD® EPYC™ processors • Designed for Land Grid Array (LGA) 4094 (SP3) socket • Scalable up to 128 cores • Thermal Design Power (TDP): up to 280 watts For a list of supported processors, see: https://static.lenovo.com/us/en/serverproven/index.shtml For technical rules for processors and heat sinks, see Technical rules for processors and heat sinks.
Heat sink	• Standard heat sink • High-performance heat sink (T-shape) For technical rules for processors and heatsinks, see Technical rules for processors and heat sinks.

Table 1. Server specifications (continued)

Specification	Description
Memory	• Slots: 32 memory module slots • Supported memory module type: – TruDDR4 3200, dual-rank, 16 GB/32 GB/64 GB RDIMM – TruDDR4 3200, dual-rank, 128 GB 3DS RDIMM • Minimum memory: – 16 GB using RDIMMs – 128 GB using 3DS RDIMMs • Maximum memory: – 2 TB using RDIMMs – 4 TB using 3DS RDIMMs **Note:** The operating speed and total memory capacity depend on the processor model and UEFI settings. For a list of supported memory, see the Lenovo ServerProven Web site: https://static.lenovo.com/us/en/serverproven/index.shtml. For technical rules for memory modules, see Technical rules for DIMMs.
Internal drives	Front: • Up to ten 2.5-inch hot-swap SAS/SATA/U.2 drives • Up to four 3.5-inch hot-swap SAS/SATA/NVMe drives Inside: • Up to two internal SATA/NVMe M.2 drives Rear: • Up to two 2.5-inch hot-swap SAS drives • Up to two 7mm hot-swap SATA/NVMe drives For technical rules for drives, see Drive bay configurations and requirements.
Expansion slots	Depending on the model, your server supports up to three PCIe slots in the rear. • PCIe x16, low-profile • PCIe x16/x16, low-profile + low profile • PCIe x16/x16, low profile + full-height For locations and technical rules for PCIe slots, see Rear view and Technical rules for PCIe adapters.
Graphics processing unit (GPU)	Your server supports the following GPUs: • Low-profile, half-length, single-wide: NVIDIA® Quadro® P620, NVIDIA® Tesla® T4 • Full-height, half-length, single-wide: NVIDIA® Quadro® P2200 For technical rules for GPU, see Technical rules for GPU adapters.

Table 1. Server specifications (continued)

Specification	Description
Input/Output (I/O) features	• Front: – One VGA connector (optional) – One USB 2.0 connector – One USB 3.1 Gen 1 connector – One external diagnostics connector – One diagnostics panel (optional) – One LCD diagnostics panel (optional) • Rear: – One VGA connector – Three USB 3.1 Gen 1 connectors – Ethernet connectors on OCP 3.0 Ethernet adapter (optional) – One XClarity Controller network connector – One serial port (optional) For detailed information about each component, see Front view and Rear view.
HBA/RAID adapters (depending on the model)	Support for JBOD mode and RAID level 0, 1, 10: • 530-16i PCIe 12Gb SFF RAID adapter (Gen3) Support for JBOD mode and RAID level 0, 1, 5, 10, 50: • 530-8i PCIe 12Gb SFF RAID adapter (Gen3) Support for JBOD mode and RAID level 0, 1, 5, 6, 10, 50, 60: • 930-8i 2 GB Flash PCIe 12Gb SFF RAID adapter (Gen3) • 930-16i 4 GB Flash PCIe 12Gb SFF RAID adapter (Gen 3) • 940-8i 4 GB Flash PCIe 12Gb SFF RAID adapter (Gen4) • 940-8i 8 GB Flash PCIe 12Gb SFF RAID adapter (Gen4) • 940-16i 8 GB Flash PCIe 12Gb SFF RAID adapter (Gen4) • 930-8e 4 GB Flash PCIe 12Gb SFF RAID adapter (Gen3) • 940-16i 8 GB Flash PCIe 12Gb Internal CFF RAID adapter (Gen4) Support the following HBA adapter: • 430-8i SAS/SATA 12Gb SFF HBA adapter (Gen3) • 430-16i SAS/SATA 12Gb SFF HBA adapter (Gen3) • 430-8e SAS/SATA 12Gb SFF HBA adapter (Gen3) • 430-16e SAS/SATA 12Gb SFF HBA adapter (Gen3) • 440-16i SAS/SATA PCIe Gen4 12Gb Internal CFF HBA adapter (Gen4) **Notes:** • **SFF**: Standard Form Factor. This type of RAID/HBA adapter is installed in the PCIe slots on the rear of the server. • **CFF**: Custom Form Factor. This type of RAID/HBA adapter is installed on the chassis between fans and front backplane.

Table 1. Server specifications (continued)

Specification	Description
	For technical rules for storage controller adapters, see Technical rules for PCIe adapters.
System fans	Up to eight dual-rotor hot-swap fans (including two redundant fans) • Standard fan 4056 (21000 RPM) • Performance fan 4056 (24000 RPM) For technical rules for system fans, see Technical rules for system fans.
Minimal configuration for debugging	• One processor in processor socket 1 • One memory module in slot 14 • One power supply • One HDD/SSD drive, one M.2 drive, or one 7mm drive (if OS is needed for debugging) • Six system fans (with one processor)
Acoustical noise emissions	• Sound power levels, idle – 6.0 bels, typical – 6.9 bels, maximum • Sound power levels, operating – 6.5 bels, typical – 6.9 bels, maximum **Notes:** • These sound power levels are measured in controlled acoustical environments according to procedures specified by ISO 7779 and are reported in accordance with ISO 9296. • The declared acoustic noise levels are based on specified configurations, which may change slightly depending on configuration/conditions.

Table 1. Server specifications (continued)

<table>
<tr><th>Specification</th><th>Description</th></tr>
<tr><td>Electrical input</td><td>One or two hot-swap power supplies for redundancy support:

Table 2. Electrical input for power supplies
<table>
<tr><th>Power supply</th><th>100–127 V ac</th><th>200–240 V ac</th><th>240 V dc</th><th>-48 V dc</th></tr>
<tr><td>500-watt 80 PLUS Platinum</td><td>√</td><td>√</td><td>√</td><td></td></tr>
<tr><td>750-watt 80 PLUS Platinum</td><td>√</td><td>√</td><td>√</td><td></td></tr>
<tr><td>750-watt 80 PLUS Titanium</td><td></td><td>√</td><td>√</td><td></td></tr>
<tr><td>1100-watt 80 PLUS Platinum</td><td>√</td><td>√</td><td>√</td><td></td></tr>
<tr><td>1100-watt 80 PLUS Platinum</td><td></td><td></td><td></td><td>√</td></tr>
<tr><td>1800-watt 80 PLUS Platinum</td><td></td><td>√</td><td>√</td><td></td></tr>
</table>
CAUTION:
• 240 V dc input (input range: 180-300 V dc) is supported in Chinese Mainland ONLY.
• Power supply with 240 V dc input cannot support hot plugging power cord function. Before removing the power supply with dc input, please turn off server or disconnect dc power sources at the breaker panel or by turning off the power source. Then, remove the power cord.</td></tr>
<tr><td>Environment</td><td>Your server complies with ASHRAE class A2 specifications. Depending on the hardware configuration, some server models comply with ASHRAE class A3 and class A4 specifications, see .</td></tr>
</table>

Firmware updates

Several options are available to update the firmware for the server.

You can use the tools listed here to update the most current firmware for your server and the devices that are installed in the server.

Note: Lenovo typically releases firmware in bundles called UpdateXpress System Packs (UXSPs). To ensure that all of the firmware updates are compatible, you should update all firmware at the same time. If you are updating firmware for both the Lenovo XClarity Controller and UEFI, update the firmware for Lenovo XClarity Controller first.

Best practices related to updating firmware are available at the following location:

http://lenovopress.com/LP0656

Important terminology

- **In-band update.** The installation or update is performed using a tool or application within an operating system that is executing on the server's core processor.
- **Out-of-band update.** The installation or update is performed by the Lenovo XClarity Controller collecting the update and then directing the update to the target subsystem or device. Out-of-band updates have no dependency on an operating system executing on the core processor. However, most out-of-band operations do require the server to be in the S0 (Working) power state.
- **On-Target update.** The installation or update is initiated from an operating system running on the server.
- **Off-Target update.** The installation or update is initiated from a computing device interacting directly with the server's Lenovo XClarity Controller.
- **UpdateXpress System Packs (UXSPs).** UXSPs are bundled updates designed and tested to provide the interdependent level of functionality, performance, and compatibility. UXSPs are server machine-type specific and are built (with firmware and device driver updates) to support specific Windows Server, Red Hat Enterprise Linux (RHEL) and SUSE Linux Enterprise Server (SLES) operating system distributions. Machine-type-specific firmware-only UXSPs are also available.

See the following table to determine the best Lenovo tool to use for installing and setting up the firmware:

Note: The server UEFI settings for option ROM must be set to **Auto** or **UEFI** to update firmware using Lenovo XClarity Essentials. For more information, see the following Tech Tip:

https://datacentersupport.lenovo.com/us/en/solutions/ht506118

Tool	In-band update	Out-of-band update	On-target update	Off-target update	Graphical user interface	Command-line interface	Supports UXSPs
Lenovo XClarity Provisioning Manager V3 Limited to core system firmware only.	√			√	√		√
Lenovo XClarity Essentials OneCLI Supports all core system firmware, I/O firmware, and installed operating system driver updates.	√	√	√	√		√	√
Lenovo XClarity Essentials UpdateXpress Supports all core system firmware, I/O firmware, and installed operating system driver updates.	√	√	√	√	√		√
Lenovo XClarity Essentials Bootable Media Creator Supports core system firmware and I/O firmware updates. You can update the Microsoft® Windows® operating system, but device drivers are not included on the bootable image.	√			√	√	√	√

The latest firmware can be found at the following site:

https://datacentersupport.lenovo.com/us/en/products/servers/thinksystem/sr645/7d2x/downloads/driver-list

- **Lenovo XClarity Provisioning Manager V3**

  From Lenovo XClarity Provisioning Manager V3, you can update the Lenovo XClarity Controller firmware, the UEFI firmware, and the Lenovo XClarity Provisioning Manager V3 software.

  Note: By default, the Lenovo XClarity Provisioning Manager V3 Graphical User Interface (GUI) is displayed when you press F1. If you have changed that default to be the text-based system setup, you can bring up the GUI from the text-based system setup interface.

  Additional information about using Lenovo XClarity Provisioning Manager V3 to update firmware is available at:

  http://sysmgt.lenovofiles.com/help/topic/LXPMv3/LXPMv3_platform_update.html

- **Lenovo XClarity Controller**

  If you need to install a specific update, you can use the Lenovo XClarity Controller interface for a specific server.

Notes:

- To perform an in-band update through Windows or Linux, the operating system driver must be installed and the Ethernet-over-USB (sometimes called LAN over USB) interface must be enabled.

  Additional information about configuring Ethernet over USB is available at:

  http://sysmgt.lenovofiles.com/help/topic/com.lenovo.systems.management.xcc.doc/NN1ia_c_configuringUSB.html
- If you update firmware through the Lenovo XClarity Controller, make sure that you have downloaded and installed the latest device drivers for the operating system that is running on the server.
- Specific details about updating firmware using Lenovo XClarity Controller are available at:

  http://sysmgt.lenovofiles.com/help/topic/com.lenovo.systems.management.xcc.doc/NN1ia_c_manageserverfirmware.html

- **Lenovo XClarity Essentials OneCLI**

  Lenovo XClarity Essentials OneCLI is a collection of command line applications that can be used to manage Lenovo servers. Its update application can be used to update firmware and device drivers for your servers. The update can be performed within the host operating system of the server (in-band) or remotely through the BMC of the server (out-of-band).

  Specific details about updating firmware using Lenovo XClarity Essentials OneCLI is available at:

  http://sysmgt.lenovofiles.com/help/topic/toolsctr_cli_lenovo/onecli_c_update.html
- **Lenovo XClarity Essentials UpdateXpress**

  Lenovo XClarity Essentials UpdateXpress provides most of OneCLI update functions through a graphical user interface (GUI). It can be used to acquire and deploy UXSP update packages and individual updates. UXSP contains firmware and device driver updates for Microsoft Windows and for Linux.

  You can obtain UXSP from the following location:

  https://datacentersupport.lenovo.com/solutions/lnvo-xpress
- **Lenovo XClarity Essentials Bootable Media Creator**

  You can use Lenovo XClarity Essentials Bootable Media Creator (BoMC) to create bootable media that is suitable for firmware updates, VPD updates, inventory and FFDC collection, advanced system configuration, FoD Keys management, secure erase, RAID configuration, and diagnostics on supported servers.

  You can obtain BoMC from the following location:

  https://datacentersupport.lenovo.com/solutions/lnvo-bomc

Tech Tips

Lenovo continually updates the support website with the latest tips and techniques that you can use to solve issues that your server might encounter. These Tech Tips (also called retain tips or service bulletins) provide procedures to work around issues or solve problems related to the operation of your server.

To find the Tech Tips available for your server:

1. Go to http://datacentersupport.lenovo.com and navigate to the support page for your server.
2. Click **Documentation** from the navigation pane.

   Follow the on-screen instructions to choose the category for the problem that you are having.

Security advisories

Lenovo is committed to developing products and services that adhere to the highest security standards in order to protect our customers and their data. When potential vulnerabilities are reported, it is the responsibility of the Lenovo Product Security Incident Response Team (PSIRT) to investigate and provide information to our customers so they may put mitigation plans in place as we work toward providing solutions.

The list of current advisories is available at the following location:
https://datacentersupport.lenovo.com/product_security/home

Power on the server

After the server performs a short self-test (power status LED flashes quickly) when connected to input power, it enters a standby state (power status LED flashes once per second).

The server can be turned on (power LED on) in any of the following ways:

- You can press the power button.
- The server can restart automatically after a power interruption.
- The server can respond to remote power-on requests sent to the BMC.

For information about powering off the server, see Power off the server.

Power off the server

The server remains in a standby state when it is connected to a power source, allowing the BMC to respond to remote power-on requests. To remove all power from the server (power status LED off), you must disconnect all power cables.

To place the server in a standby state (power status LED flashes once per second):

Note: The Lenovo XClarity Controller can place the server in a standby state as an automatic response to a critical system failure.

- Start an orderly shutdown using the operating system (if supported by your operating system).
- Press the power button to start an orderly shutdown (if supported by your operating system).
- Press and hold the power button for more than 4 seconds to force a shutdown.

When in a standby state, the server can respond to remote power-on requests sent to the Lenovo XClarity Controller. For information about powering on the server, see Power on the server.

Chapter 2. Server components

Use the information in this section to learn about each of the components associated with your server.

Front view

The front view of the server varies by model. Depending on the model, your server might look slightly different from the illustrations in this topic.

Refer to the following front view for different server models:

- Server models with four 2.5-inch front drive bays
- Server models with eight 2.5-inch front drive bays
- Server models with ten 2.5-inch front drive bays
- Server models with four 3.5-inch front drive bays
- Server models with four 2.5-inch front drive bays (backplane-less)
- Server models with eight 2.5-inch front drive bays (backplane-less)
- Server models with ten 2.5-inch front drive bays (backplane-less)
- Server models with four 3.5-inch front drive bays (backplane-less)
- Server models with eight 2.5-inch front drive bays (with LCD diagnostics panel)

© Copyright Lenovo 2020

Server model with four 2.5-inch drive bays

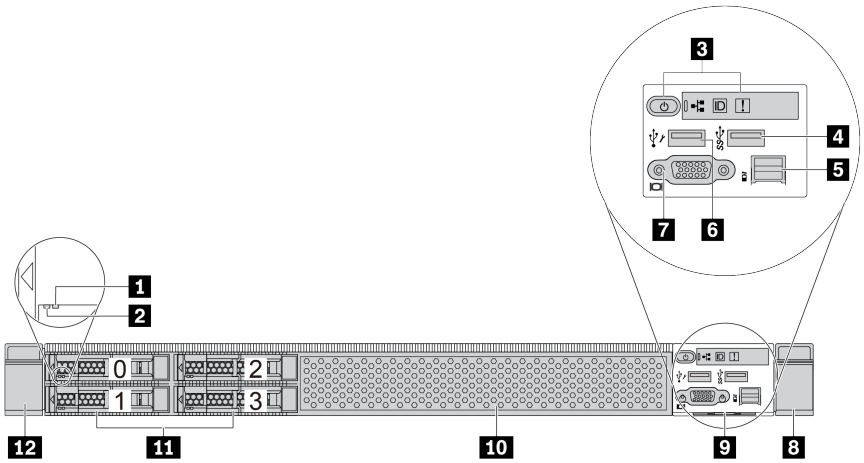

Table 3. Components on the front of the server

Callout	Callout
1 Drive status LED	2 Drive activity LED
3 Diagnostics panel	4 USB 3.1 Gen 1 connector
5 External diagnostics connector	6 XClarity Controller USB connector
7 VGA connector (optional)	8 Rack latch (right)
9 Pull-out information tab	10 Drive bay filler (1)
11 Drive bays (4)	12 Rack latch (left)

Note: For more information about each component, see Front components overview.

Server model with eight 2.5-inch drive bays

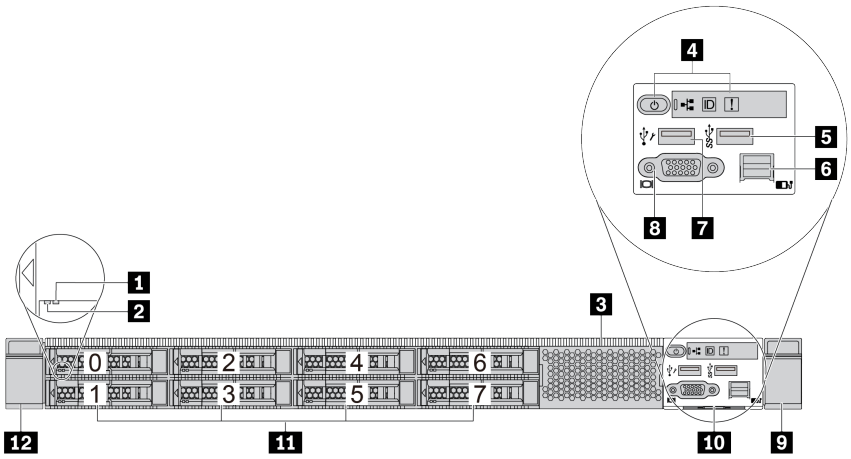

Table 4. Components on the front of the server

Callout	Callout
1 Drive status LED	2 Drive activity LED
3 Drive bay filler (1)	4 Diagnostics panel
5 USB 3.1 Gen 1 connector	6 External diagnostics connector
7 XClarity Controller USB connector	8 VGA connector (optional)
9 Rack latch (right)	10 Pull-out information tab
11 Drive bays (8)	12 Rack latch (left)

Note: For more information about each component, see Front components overview.

Server model with ten 2.5-inch drive bays

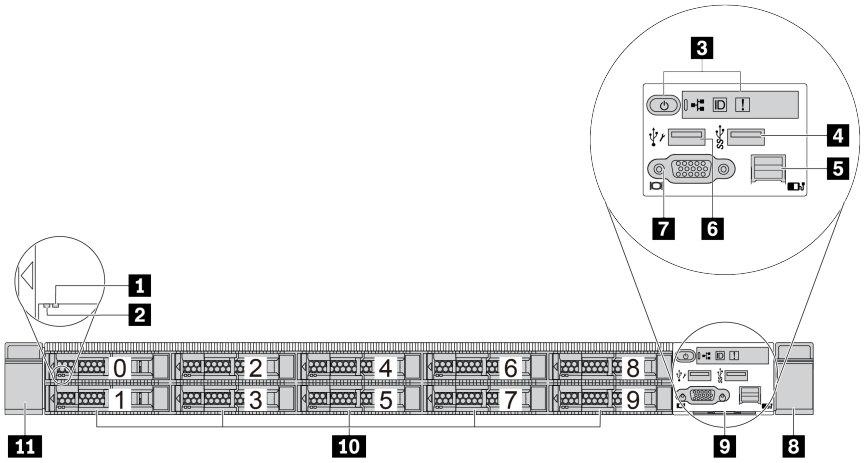

Table 5. Components on the front of the server

Callout	Callout
1 Drive status LED	2 Drive activity LED
3 Diagnostics panel	4 USB 3.1 Gen 1 connector
5 External diagnostics connector	6 XClarity Controller USB connector
7 VGA connector (optional)	8 Rack latch (right)
9 Pull-out information tab	10 Drive bays (10)
11 Rack latch (left)	

Note: For more information about each component, see Front components overview.

Server model with four 3.5-inch drive bays

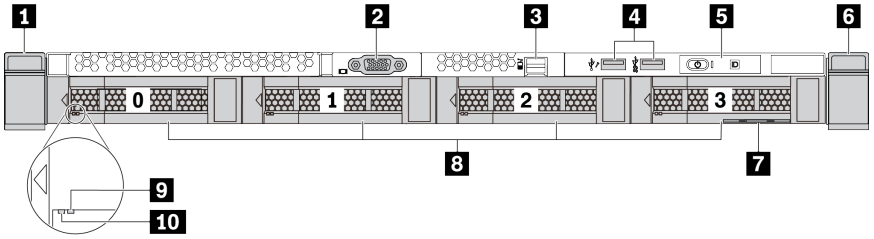

Table 6. Components on the front of the server

Callout	Callout
1 Rack latch (right)	2 VGA connector (optional)
3 External diagnostics connector	4 XClarity Controller USB connector and USB 3.1 Gen 1 connector
5 Diagnostics panel	6 Rack latch (left)
7 Pull-out information tab	8 Drive bays (4)
9 Drive status LED	10 Drive activity LED

Note: For more information about each component, see Front components overview.

Server model with four 2.5-inch drive bays (backplane-less)

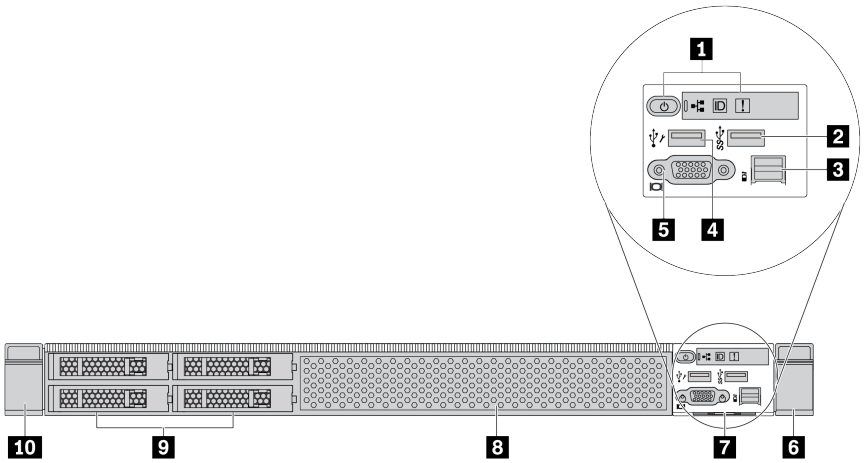

Table 7. Components on the front of the server

Callout	Callout
1 Diagnostics panel	2 USB 3.1 Gen 1 connector
3 External diagnostics connector	4 XClarity Controller USB connector
5 VGA connector (optional)	6 Rack latch (right)
7 Pull-out information tab	8 Drive bay filler (1)
9 Drive bay fillers (4)	10 Rack latch (left)

Note: For more information about each component, see Front components overview.

Server model with eight 2.5-inch drive bays (backplane–less)

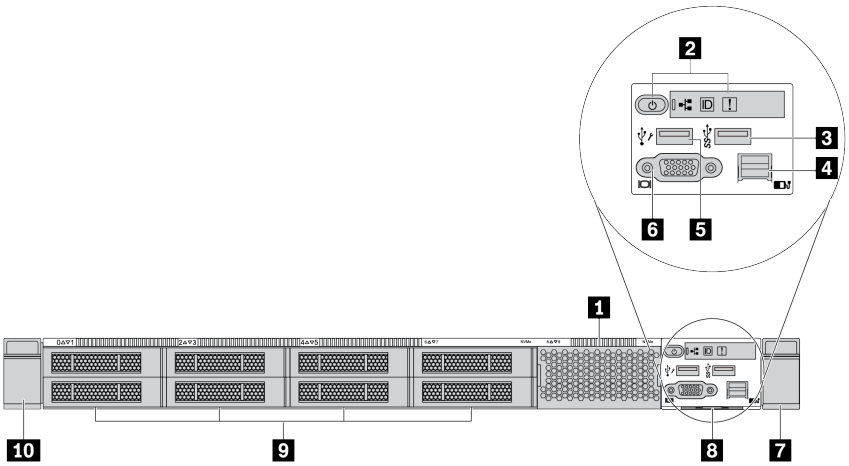

Table 8. Components on the front of the server

Callout	Callout
1 Drive bay filler (1)	2 Diagnostics panel
3 USB 3.1 Gen 1 connector	4 External diagnostics connector
5 XClarity Controller USB connector	6 VGA connector (optional)
7 Rack latch (right)	8 Pull-out information tab
9 Drive bay filler (8)	10 Rack latch (left)

Note: For more information about each component, see Front components overview.

Server model with ten 2.5-inch drive bays (backplane-less)

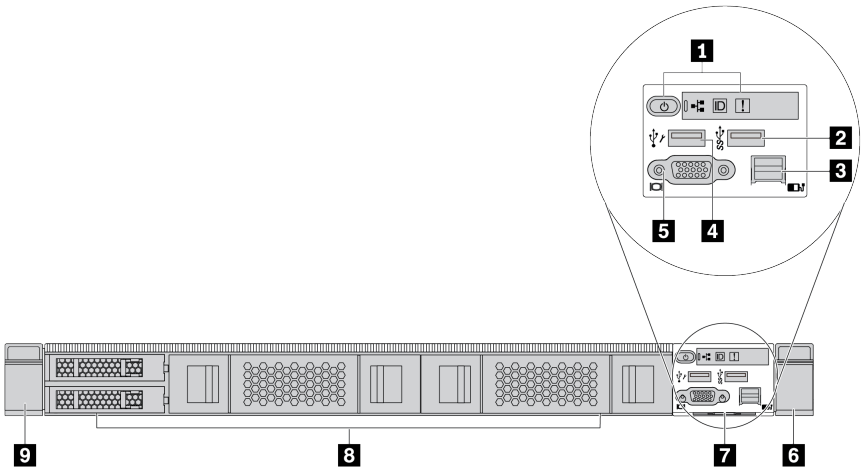

Table 9. Components on the front of the server

Callout	Callout
1 Diagnostics panel	2 USB 3.1 Gen 1 connector
3 External diagnostics connector (Reserved)	4 XClarity Controller USB connector
5 VGA connector (optional)	6 Rack latch (right)
7 Pull-out information tab	8 Drive bay fillers (2+2)
9 Rack latch (left)	

Note: For more information about each component, see Front components overview.

Server model with four 3.5-inch drive bays (backplane-less)

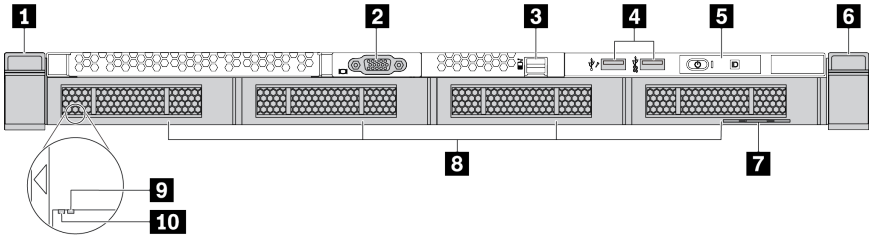

Table 10. Components on the front of the server

Callout	Callout
1 Rack latch (right)	2 VGA connector (optional)
3 External diagnostics connector	4 XClarity Controller USB connector and USB 3.1 Gen 1 connector
5 Diagnostics panel	6 Rack latch (left)
7 Pull-out information tab	8 Drive bay fillers (4)
9 Drive status LED	10 Drive activity LED

Note: For more information about each component, see Front components overview.

Server model with eight 2.5-inch drive bays (with LCD diagnostics panel assembly)

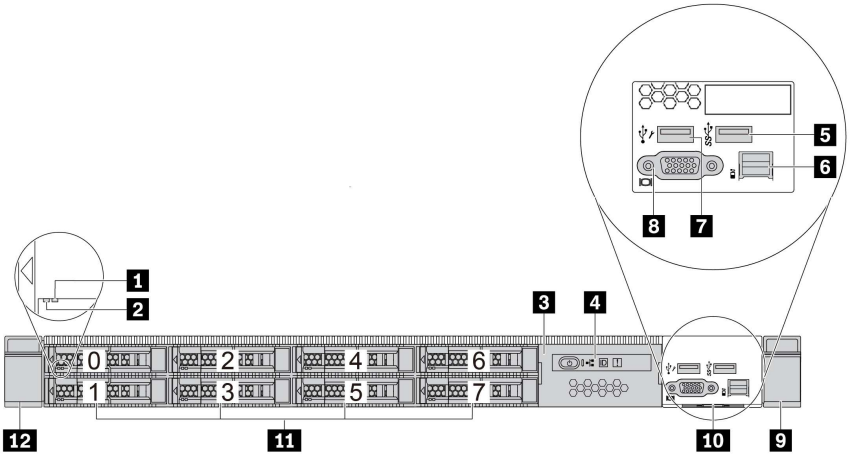

Table 11. Components on the front of the server

Callout	Callout
1 Drive status LED	2 Drive activity LED
3 LCD diagnostics panel assembly	4 LCD diagnostics panel
5 USB 3.1 Gen 1 connector	6 External diagnostics connector
7 XClarity Controller USB connector	8 VGA connector (optional)
9 Rack latch (right)	10 Pull-out information tab
11 Drive bays (8)	12 Rack latch (left)

Note: For more information about each component, see Front components overview.

Front components overview

Diagnostics panel

The diagnostics panel is integrated in front I/O assembly on some models. For information about the controls and status LEDs on the diagnostics panel, see Diagnostics panel.

Drive LEDs

Each hot-swap drive comes with an activity LED and status LED and the signals are controlled by the backplanes. Different colors and speeds indicate different activities or status of the drive. The following illustration shows the LEDs on a Hard disk drive or solid–state drive.

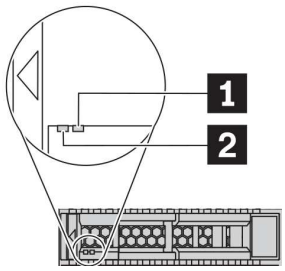

Figure 4. Drive LEDs

Drive LED	Status	Description
1 Drive status LED (right)	Solid yellow	The drive has an error.
	Blinking yellow (blinking slowly, about one flash per second)	The drive is being rebuilt.
	Blinking yellow (blinking rapidly, about four flashes per second)	The RAID adapter is locating the drive.
2 Drive activity LED (left)	Solid green	The drive is powered but not active.
	Blinking green	The drive is active.

External diagnostics port

The connector is for connecting an external diagnostics handset. For more about its functions, see LCD diagnostics panel/handset.

Hot-swap drives and drive bays

The drive bays on the front and rear of your server are designed for hot-swap drives. The number of the installed drives in your server varies by model. When you install drives, follow the order of the drive bay numbers.

The EMI integrity and cooling of the server are protected by having all drive bays occupied. Vacant drive bays must be occupied by drive fillers.

LCD diagnostics panel assembly

The assembly comes with an integrated LCD diagnostics panel that can be used to quickly obtain system status, firmware levels, network information, and health information about the system. For more about the panel functions, see LCD diagnostics panel/handset.

Pull-out information tab

The Lenovo XClarity Controller network access label is attached on the pull-out information tab. The default Lenovo XClarity Controller hostname and the IPv6 Link Local Address (LLA) are provided on the tab.

Rack latches

If your server is installed in a rack, you can use the rack latches to help you slide the server out of the rack. You also can use the rack latches and screws to secure the server in the rack so that the server cannot slide out, especially in vibration-prone areas. For more information, refer to the *Rack Installation Guide* that comes with your rail kit.

USB 3.1 Gen 1 connectors

The USB 3.1 Gen 1 connectors can be used to attach a USB-compatible device, such as a USB keyboard, USB mouse, or USB storage device.

VGA connector

The VGA connectors on the front and rear of the server can be used to attach a high-performance monitor, a direct-drive monitor, or other devices that use a VGA connector.

XClarity Controller USB connector

The XClarity Controller USB connector can be used to attach an Ethernet cable to manage the system using XClarity Controller. The USB can also be used as a regular USB connector to the host OS.

Diagnostics panel

The diagnostics panel provides controls, connectors, and LEDs.

Note: Diagnostics panel with an LCD display is available for some models. For details, see LCD diagnostics panel/handset.

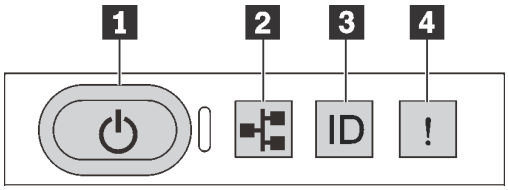

Figure 5. Diagnostics panel

1 Power button with power status LED

You can press the power button to power on the server when you finish setting up the server. You also can hold the power button for several seconds to power off the server if you cannot shut down the server from the operating system. The power status LED helps you to determine the current power status.

Status	Color	Description
Solid on	Green	The server is on and running.
Slow blinking (about one flash per second)	Green	The server is off and is ready to be powered on (standby state).
Fast blinking (about four flashes per second)	Green	The server is off, but the XClarity Controller is initializing, and the server is not ready to be powered on.
Off	None	There is no ac power applied to the server.

2 Network activity LED

Compatibility of the NIC adapter and the network activity LED

NIC adapater	Network activity LED
OCP 3.0 Ethernet adapter	Support
PCIe NIC adapter	Not support

When an OCP 3.0 Ethernet adapter is installed, the network activity LED on the front I/O assembly helps you identify the network connectivity and activity. If no OCP 3.0 Ethernet adapter is installed, this LED is off.

Status	Color	Description
On	Green	The server is connected to a network.
Blinking	Green	The network is connected and active.
Off	None	The server is disconnected from the network.

3 System ID button with system ID LED

Use this system ID button and the blue system ID LED to visually locate the server. A system ID LED is also located on the rear of the server. Each time you press the system ID button, the state of both the system ID LEDs changes. The LEDs can be changed to on, blinking, or off. You can also use the Lenovo XClarity Controller or a remote management program to change the state of the system ID LEDs to assist in visually locating the server among other servers.

If the XClarity Controller USB connector is set to have both the USB 2.0 function and XClarity Controller management function, you can press the system ID button for three seconds to switch between the two functions.

4 System error LED

The system error LED helps you to determine if there are any system errors.

Status	Color	Description	Action
On	Yellow	An error has been detected on the server. Causes might include but are not limited to the following errors: • The temperature of the server reached the non-critical temperature threshold. • The voltage of the server reached the non-critical voltage threshold. • A fan has been detected to be running at low speed. • A hot-swap fan has been removed. • The power supply has a critical error. • The power supply is not connected to the power.	Check the event log to determine the exact cause of the error. Alternatively, follow the light path diagnostics to determine if additional LEDs are lit that will direct you to identify the cause of the error.
Off	None	The server is off or the server is on and is working correctly.	None.

LCD diagnostics panel/handset

The LCD diagnostics panel is a component attached to the front of the server, the external LCD diagnostics handset is an external device that can be connected to the server with a cable. Functions of the integrated component and the external device are the same, both of them can be used to quickly access system information such as active errors, system status, firmware, network information, and health information.

Where to find the LCD diagnostics panel

Location	Callout
The LCD diagnostics panel is attached to the front of the server. 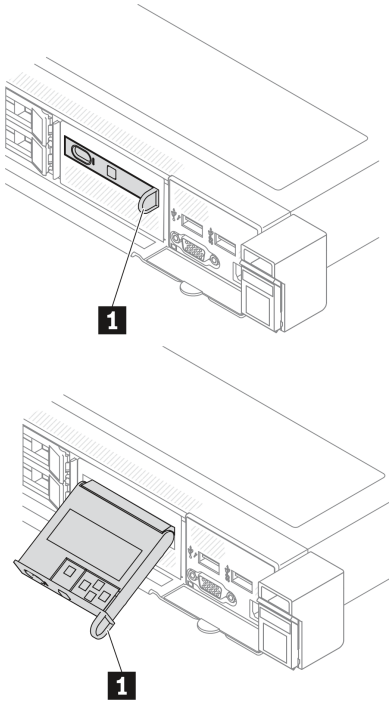 	1 The handle with which the panel can be pulled out and inserted into the rack. **Notes:** • The panel can be inserted or pulled out regardless of the system status. • When pulling out the panel, carefully hold it by the handle and avoid any hard pulling.

Where to find the external LCD diagnostics handset

Location	Callout
The external LCD diagnostics handset is connected to the server with an external cable. 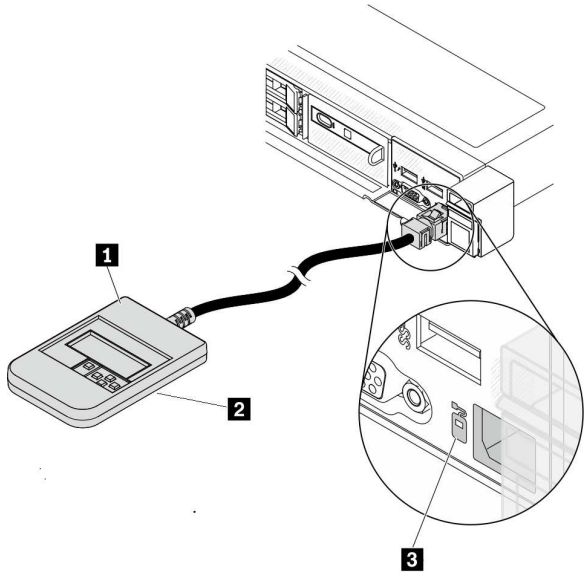	1 The LCD diagnostics handset that can be connected to the server with an external cable. 2 The magnetic bottom with which the device can be attached to the top or side of the rack. This is helpful and can free up both hands for certain service tasks. 3 The external diagnostics connector on the front of the server that can be used to connect an external LCD diagnostics handset.

Note: Pay attention to the following steps when unplugging the external handset:

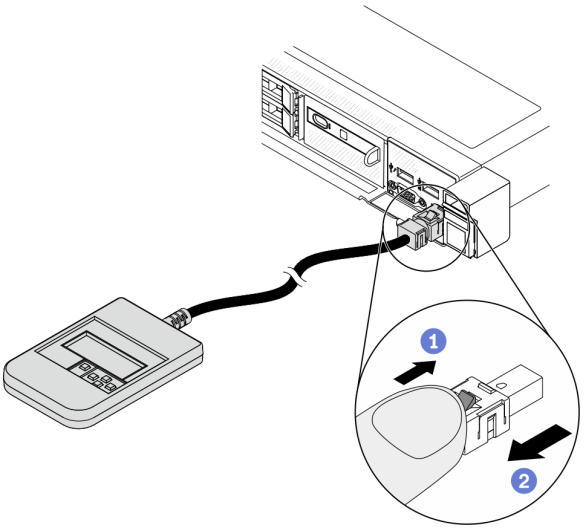

Step 1. Press the plastic clip on the plug in the shown direction.
Step 2. Gently pull out the cable from the connector while keeping the clip pressed down.

Display panel overview

Both the integrated panel and the external handset consist of an LCD display and 5 navigation buttons.

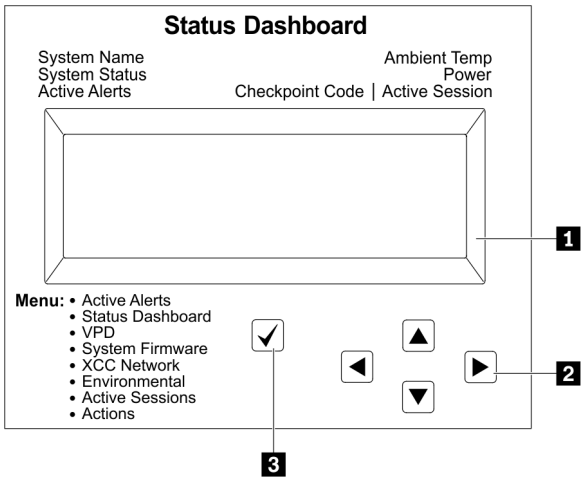

1 LCD display
2 Scroll buttons (up/down/left/right).
Press the scroll buttons to locate and select system information.
3 Select button.
Press the select button to select from the menu options.

Options flow diagram

The LCD diagnostics panel/handset shows various system information. Navigate through the options with the scroll keys.

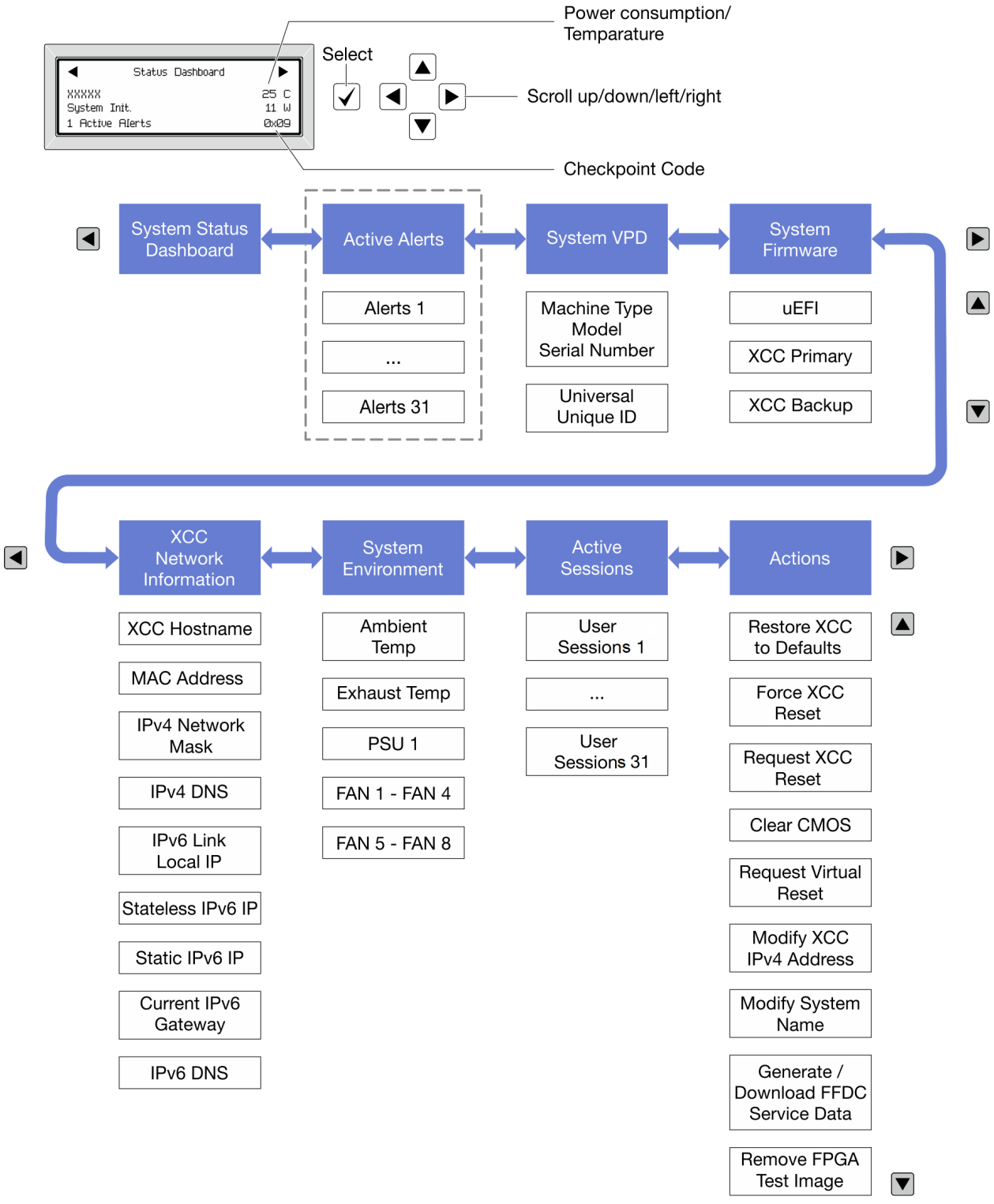

Full menu list

Following is the list of options available on the LCD diagnostics panel/handset. Switch between an option and the subordinate information entries with the select button, and switch among options or information entries with the scroll buttons.

Home Menu (System Status Dashboard)

Home Menu	Example
1 System name 2 System status 3 Active alert quantity 4 Temperature 5 Power consumption 6 Checkpoint code	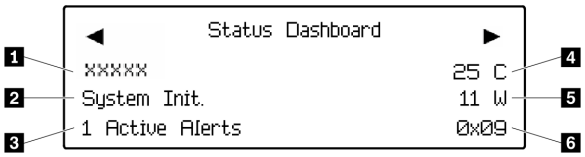

Active Alerts

Sub Menu	Example
Home screen: Active error quantity **Note:** The “Active Alerts” menu displays only the quantity of active errors. If no errors occur, the “Active Alerts” menu will not be available during navigation.	1 Active Alerts
Details screen: • Error message ID (Type: Error/Warning/Information) • Occurrence time • Possible sources of the error	Active Alerts: 1 Press ▼ to view alert details FQXSPPU009N(Error) 04/07/2020 02:37:39 PM CPU 1 Status: Configuration Error

System VPD Information

Sub Menu	Example
• Machine type and serial number • Universal Unique ID (UUID)	Machine Type: xxxx Serial Num: xxxxxx Universal Unique ID: xxxxxxxxxxxxxxxxxxxxxxxxxxxx

System Firmware

Sub Menu	Example
UEFI • Firmware level (status) • Build ID • Version number • Release date	UEFI (Inactive) Build: D0E101P Version: 1.00 Date: 2019-12-26
XCC Primary • Firmware level (status) • Build ID • Version number • Release date	XCC Primary (Active) Build: DVI399T Version: 4.07 Date: 2020-04-07
XCC Backup • Firmware level (status) • Build ID • Version number • Release date	XCC Backup (Active) Build: D8BT05I Version: 1.00 Date: 2019-12-30

XCC Network Information

Sub Menu	Example
• XCC hostname • MAC address • IPv4 Network Mask • IPv4 DNS • IPv6 Link Local IP • Stateless IPv6 IP • Static IPv6 IP • Current IPv6 Gateway • IPv6 DNS **Note:** Only the MAC address that is currently in use is displayed (extension or shared).	XCC Network Information XCC Hostname: XCC-xxxx-SN MAC Address: xx:xx:xx:xx:xx:xx IPv4 IP: xx.xx.xx.xx IPv4 Network Mask :x.x.x.x IPv4 Default Gateway : x.x.x.x

System Environmental Information

Sub Menu	Example
• Ambient temperature • Exhaust temperature • PSU status • Spinning speed of fans by RPM	Ambient Temp: 24 C Exhaust Temp: 30 C PSU1: Vin= 213 w Inlet= 26 C FAN1 Front: 21000 RPM FAN2 Front: 21000 RPM FAN3 Front: 21000 RPM FAN4 Front: 21000 RPM

Active Sessions

Sub Menu	Example
Quantity of active sessions	Active User Sessions: 1

Actions

Sub Menu	Example
Several quick actions supported for users • Restore XCC to Defaults • Force XCC Reset • Request XCC Reset • Clear CMOS • Request Virtual Reseat • Modify XCC Static IPv4 Address/Net mask/Gateway • Modify System Name • Generate/Download FFDC Service Data • Remove FPGA Test Image	Request XCC Reset? This will request the BMC to reboot itself. Hold √ for 3 seconds

Rear view

The rear view of the server varies by model. Depending on the model, your server might look slightly different from the illustrations in this topic.

Refer to the following rear view for different server models:

- Server model with three PCIe slots
- Server model with two PCIe slots
- Server model with two hot-swap 2.5-inch rear drive bays and one PCIe slot
- Server model with two hot-swap 7mm rear drive bays and two PCIe slots

Server model with three PCIe slots

The following illustration shows the rear view of server model with three PCIe slots. Depending on the model, your server might look slightly different from the illustration below.

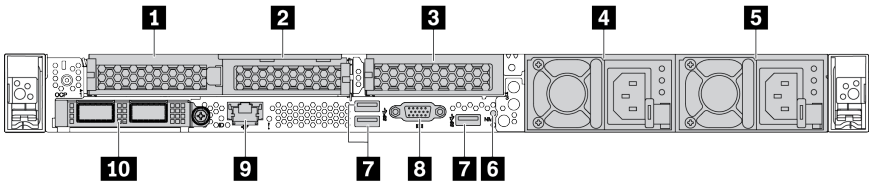

Table 12. Components on the rear of the server

Callout	Callout
1 PCIe slot 1 on riser 1 assembly	2 PCIe slot 2 on riser 1 assembly
3 PCIe slot 3 on riser 2 assembly	4 Power supply 2 (optional)
5 Power supply 1	6 NMI button
7 USB 3.1 Gen 1 connectors (3)	8 VGA connector
9 XClarity Controller network connector	10 Ethernet connectors on OCP 3.0 Ethernet adapter (optional)

Note: For more information about each component, see Rear components overview.

Server model with two PCIe slots

The following illustration shows the rear view of the server model with two PCIe slots. Depending on the model, your server might look slightly different from the illustration below.

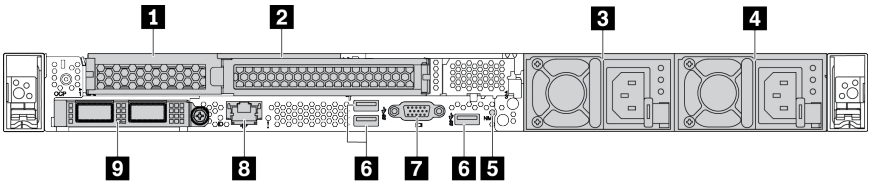

Table 13. Components on the rear of the server

Callout	Callout
1 PCIe slot 1 on riser 1 assembly	2 PCIe slot 2 on riser 1 assembly
3 Power supply 2 (optional)	4 Power supply 1
5 NMI button	6 USB 3.1 Gen 1 connectors (3)
7 VGA connector	8 XClarity Controller network connector
9 Ethernet connectors on OCP 3.0 Ethernet adapter (optional, two or four connectors may be available)	

Note: For more information about each component, see Rear components overview.

Server model with two 2.5-inch hot-swap rear drive bays and one PCIe slot

The following illustration shows the rear view of the server model with two hot-swap drive bays and one PCIe slot. Depending on the model, your server might look slightly different from the illustration below.

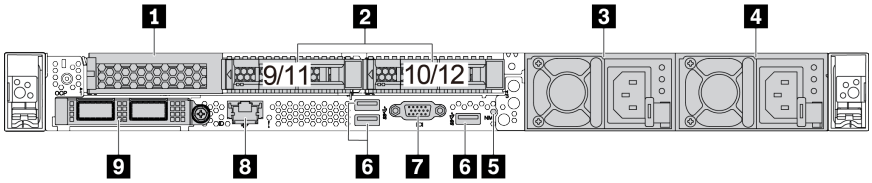

Table 14. Components on the rear of the server

1 PCIe slot 1 on riser 1 assembly	2 Rear 2.5-inch drive bays (2)
4 Power supply 2 (optional)	5 Power supply 1
6 NMI button	7 USB 3.1 Gen 1 connectors (3)
8 VGA connector	9 XClarity Controller network connector
10 Ethernet connectors on OCP 3.0 Ethernet adapter (optional, two or four connectors may be available)	

Note: For more information about each component, see Rear components overview.

Server model with two 7mm hot-swap rear drive bays and two PCIe slots

The following illustration shows the rear view of the server model with two 7mm hot-swap rear drive bays and two PCIe slots. Depending on the model, your server might look slightly different from the illustration below.

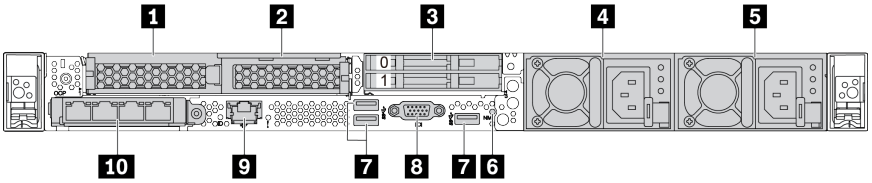

Table 15. Components on the rear of the server

1 PCIe slot 1 on riser 1 assembly	2 PCIe slot 2 on riser 1 assembly
3 Rear 7mm drive bays (2)	4 Power supply 2 (optional)
5 Power supply 1	6 NMI button
7 USB 3.1 Gen 1 connectors (3)	8 VGA connector
9 XClarity Controller network connector	10 Ethernet connectors on OCP 3.0 Ethernet adapter (optional, two or four connectors may be available)

Note: For more information about each component, see Rear components overview.

Rear components overview

Drive LEDs

Each hot-swap drive comes with an activity LED and status LED and the signals are controlled by the backplanes. Different colors and speeds indicate different activities or status of the drive. The following illustration shows the LEDs on a Hard disk drive or solid–state drive.

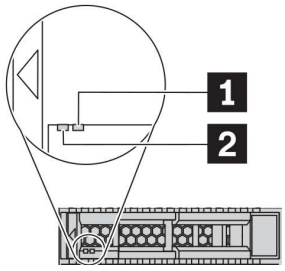

Figure 6. Drive LEDs

Drive LED	Status	Description
1 Drive status LED (right)	Solid yellow	The drive has an error.
	Blinking yellow (blinking slowly, about one flash per second)	The drive is being rebuilt.
	Blinking yellow (blinking rapidly, about four flashes per second)	The RAID adapter is locating the drive.
2 Drive activity LED (left)	Solid green	The drive is powered but not active.
	Blinking green	The drive is active.

Ethernet connectors

The OCP 3.0 Ethernet adapter provides two or four extra Ethernet connectors for network connections.

One of the Ethernet connectors on the OCP 3.0 Ethernet adapter can also function as a management connector using the shared management capacity. If the shared management connector fails, traffic can automatically switch over to another connector on the adapter.

Hot-swap drives and drive bays

The drive bays on the front and rear of your server are designed for hot-swap drives. The number of the installed drives in your server varies by model. When you install drives, follow the order of the drive bay numbers.

The EMI integrity and cooling of the server are protected by having all drive bays occupied. Vacant drive bays must be occupied by drive fillers.

NMI button

Press this button to force a nonmaskable interrupt (NMI) to the processor. By this way, you can make the operating system halt (such as Windows Blue Screen of Death) and take a memory dump. You might have to use a pen or the end of a straightened paper clip to press the button.

PCIe slots

The PCIe slots are on the rear of the server and your server supports up to three PCIe slots on riser 1 and 2 assemblies.

Power supply units

The hot-swap redundant power supply helps you avoid significant interruption to the operation of the system when a power supply fails. You can purchase a power supply option from Lenovo and install the power supply to provide power redundancy without turning off the server.

On each power supply, there are three status LEDs near the power cord connector. For information about the LEDs, see Rear view LEDs.

USB 3.1 Gen 1 connectors

The USB 3.1 Gen 1 connectors can be used to attach a USB-compatible device, such as a USB keyboard, USB mouse, or USB storage device.

VGA connector

The VGA connectors on the front and rear of the server can be used to attach a high-performance monitor, a direct-drive monitor, or other devices that use a VGA connector.

XClarity Controller network connector

The XClarity Controller network connector can be used to attach an Ethernet cable to manage the baseboard management controller (BMC).

Rear view LEDs

The rear of the server provides system ID LED, system error LED, Ethernet LEDs, and power supply LEDs.

Server rear view LEDs

The following illustration shows the LEDs on the rear view of server model with two PCIe slots. The LEDs on the rear view of other server models are the same.

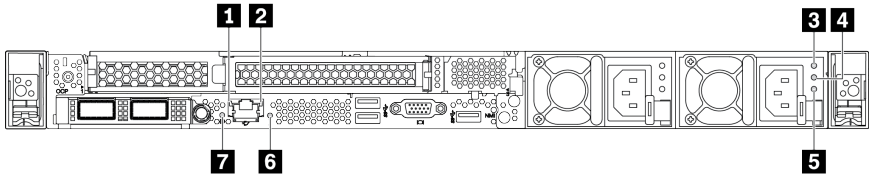

Figure 7. Rear view LEDs

Table 16. LEDs on the rear view of the server

1 Ethernet link LED	2 Ethernet activity LED
3 Power input LED	4 Power output LED
5 Power supply error LED	6 System error LED
7 System ID LED	

1 Ethernet link LED
2 Ethernet activity LED

The BMC network connector has two status LEDs.

Ethernet status LED	Color	Status	Description
1 Ethernet link LED	Green	On	Network link is established.
	None	Off	Network link is disconnected.
2 Ethernet activity LED	Green	Blinking	Network link is connected and active.
	None	Off	The server is disconnected from a LAN.

3 4 5 Power supply LEDs

Each hot-swap power supply has three status LEDs.

LED	Description
3 Power input LED	• Green: The power supply is connected to the ac power source. • Off: The power supply is disconnected from the ac power source or a power problem occurs.
4 Power output LED	• Green: The server is on and the power supply is working normally. • Blinking green: The power supply is in the zero-output mode (standby). When the server power load is low, one of the installed power supplies enters into the standby state while the other one delivers the entire load. When the power load increases, the standby power supply will switch to active state to provide sufficient power to the system. To disable zero-output mode, start the Setup utility, go to **Advanced → Power → Zero Output**, and select **Disable**. If you disable the zero-out mode, both power supplies will be in the active state. • Off: The server is powered off, or the power supply is not working properly. If the server is powered on but the LED is off, replace the power supply.
5 Power supply error LED	• Yellow: The power supply has failed. To resolve the issue, replace the power supply. • Off: The power supply is working normally.

6 System ID LED

The blue system ID LED helps you to visually locate the server. A system ID LED is also located on the front of the server. Each time you press the system ID button, the state of both the system ID LEDs changes. The LEDs can be changed to on, blinking, or off. You can also use the Lenovo XClarity Controller or a remote management program to change the state of the system ID LEDs to assist in visually locating the server among other servers.

7 System error LED

The system error LED helps you to determine if there are any system errors. For details, see Diagnostics panel.

System board components

The illustration in this section shows the component locations on the system board.

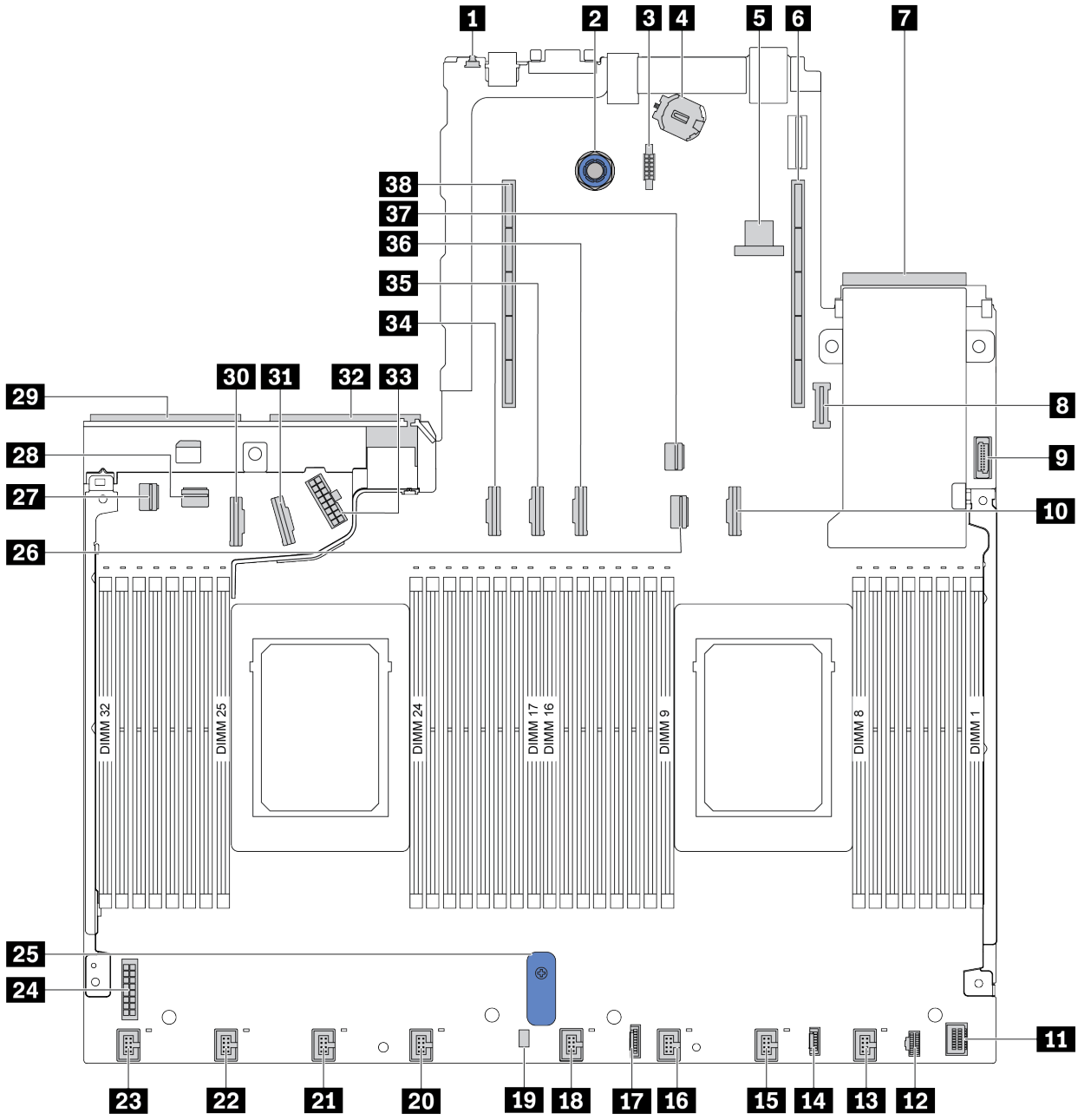

Figure 8. System board components

1 NMI Button	2 System Board Release Pin
3 Serial Port Module Connector	4 CMOS Battery (CR2032)
5 Internal USB Connector	6 Riser 1 slot
7 OCP 3.0 Network Card Connector	8 TPM Module Connector

9 Front USB Connector	10 PCIe Connector 3
11 Front VGA Connector	12 M.2 Power Connector
13 Fan 1 connector	14 Connector for external diagnostics panel
15 Fan 2 connector	16 Fan 3 connector
17 Diagnostics panel connector	18 Fan 4 connector
19 Intrusion Switch cable Connector	20 Fan 5 connector
21 Fan 6 connector	22 Fan 7 connector
23 Fan 8 connector	24 Backplane Power Connector
25 System Board Lift Handle	26 PCIe Connector 1
27 PCIe Connector 4	28 PCIe Connector 5
29 Power Supply 1 Connector	30 PCIe Connector 7
31 PCIe Connector 8	32 Power Supply 2 Connector
33 Internal Raid Power Connector	34 PCIe Connector 6
35 PCIe Connector 9 (Reserved)	36 PCIe Connector 10 (Reserved)
37 PCIe Connector 2	38 Riser 2 slot

System board LEDs

The illustration in this section shows the LEDs on the system board.

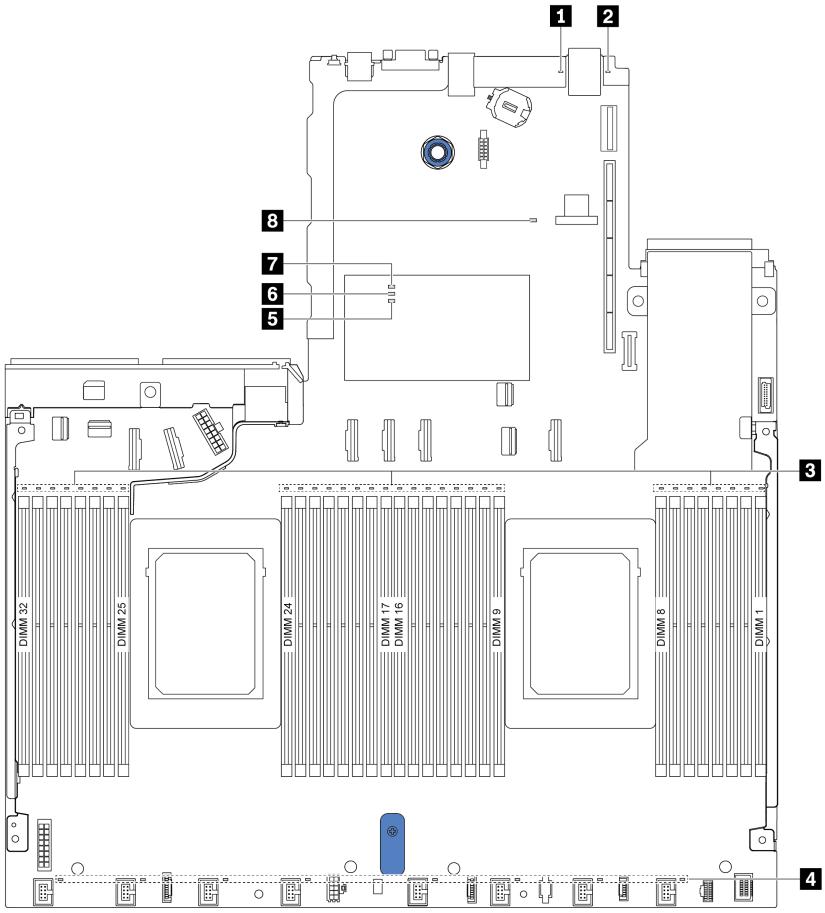

Figure 9. System board LEDs

Table 17. LEDs on the system board

Callout	Callout
1 System error LED	2 System ID LED
3 DIMM error LEDs (32)	4 Fan error LEDs (8)
5 FPGA error LED	6 FPGA heart beat LED
7 FPGA power LED	8 BMC heart beat LED

1 System error LED

When this yellow LED is lit, one or more LEDs elsewhere in the server might also be lit to direct you to the source of the error. For more information, see Rear view LEDs.

2 System ID LED

The blue system ID LED helps you to visually locate the server. A system ID LED is also located on the front of the server. Each time you press the system ID button, the state of both the system ID LEDs changes. The LEDs can be changed to on, blinking, or off.

3 DIMM error LEDs

When a DIMM error LED is lit, it indicates that the corresponding memory module has failed.

4 Fan error LEDs

When a fan error LED is lit, it indicates that the corresponding system fan is operating slowly or has failed.

5 FPGA error LED

The FPGA error LED helps you identify different FPGA errors.

Status	Color	Description
On	Green	FPGA running image is test build image.
Blinking	Green	• Blinking (blinking slowly, about one flash per second): One or more power fault occur. • Blinking (blinking rapidly, about four flashes per second): FPGA does not assert RSMRST_N.
Off	None	No power faults occur.

6 FPGA heart beat LED

The FPGA heart beat LED helps you identify different FPGA errors.

Status	Color	Description
On or Off	Green	FPGA does not work.
Blinking	Green	FPGA works normally.

7 FPGA power LED

The FPGA power LED helps you identify different FPGA errors.

Status	Color	Description
On	Green	The FPGA power is on.
Blinking	Green	• Blinking (blinking slowly, about one flash per second): The FPGA power is off. • Blinking (blinking rapidly, about four flashes per second): The FPGA permission is delayed.

8 BMC heart beat LED

The BMC heart beat LED helps you identify the BMC status.

Status	Color	Description
On	Green	The BMC is not alive.
Blinking	Green	The BMC is alive.
Off	None	The BMC is not alive.

Switch block and jumper

The following illustrates locations and functions of the switch block and jumper on the system board.

Important:

- Before you move any jumpers, turn off the server; then, disconnect all power cords and external cables. Do not open your server or attempt any repair before reading and understanding the following information:
  - http://thinksystem.lenovofiles.com/help/topic/safety_documentation/pdf_files.html
  - Handling static-sensitive devices
- If there is a clear protective sticker on the top of the switch blocks, you must remove and discard it to access the switches.
- Any system-board switch or jumper block that is not shown in the illustrations in this document is reserved.

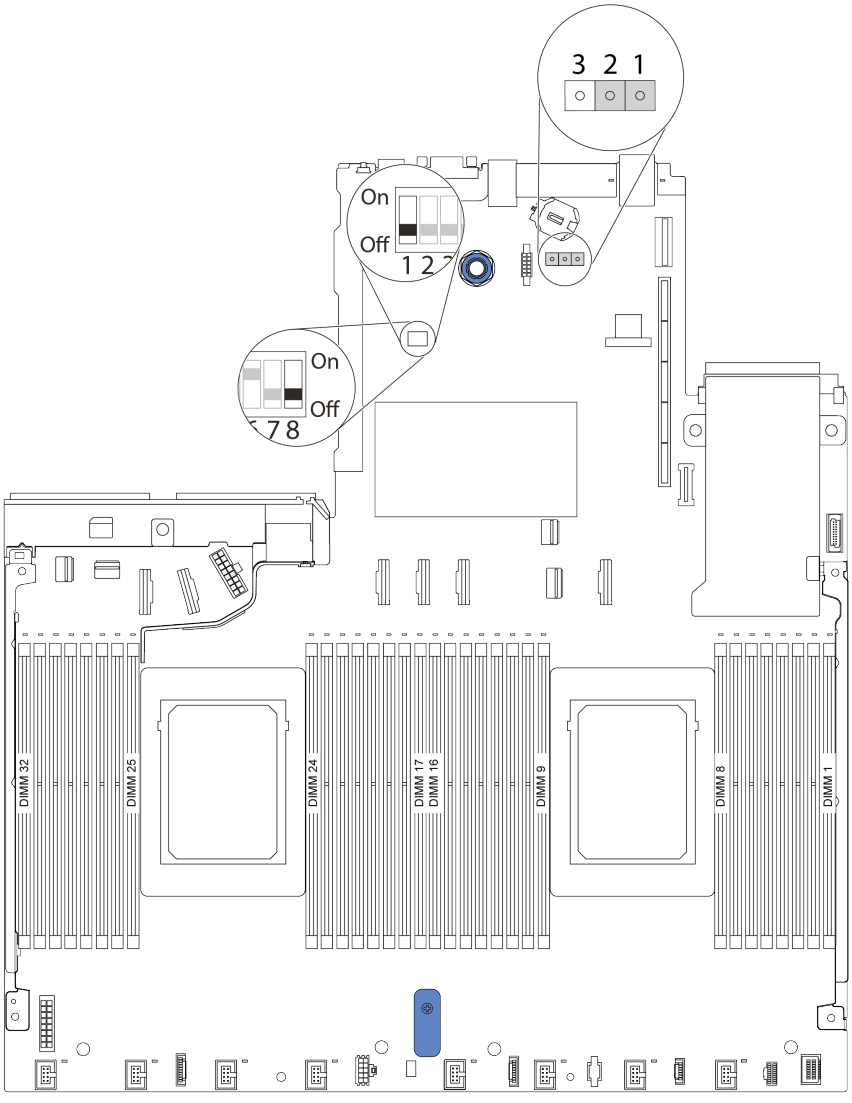

Figure 10. Switch block and jumper locations on system board

Table 18. Switch block and jumper description

Switch/jumper name	Switch/jumper number	Description
1 Switch 1 block	SW1	• Switch 1: One-time power-on password bypass – Toggle to ON or OFF to bypass the power-on password for one time. **Note:** The switch cannot skip the privilege administrator password. • Switch 3: TPM physical presence status (Default setting: OFF) – Toggle to ON to assert host TPM physical presence, which is required for some security settings. • Switch 4: XCC force update (Default setting: OFF) – Toggle to ON to force XClarity Controller firmware to enter the booting mode (For development purpose only). • Switch 5: XCC SPI0 half ROM (Default setting: OFF) – Toggle to ON to force XClarity Controller to boot from a backup image. • Switch 6: Low security (Default setting: OFF) – Toggle to ON to enable low security mode for XClarity Controller firmware (For development purpose only). • Switch 2, 7, 8: Reserved
2 Clear CMOS jumper	J1	• Pins 1 and 2: The jumper is in default setting. • Pins 2 and 3: Clear the real-time clock (RTC) registry.

Parts list

Use the parts list to identify each of the components that are available for your server.

For more information about ordering the parts shown in Server components:

https://datacentersupport.lenovo.com/products/servers/thinksystem/sr645/7d2x/parts

Note: Depending on the model, your server might look slightly different from the illustration.

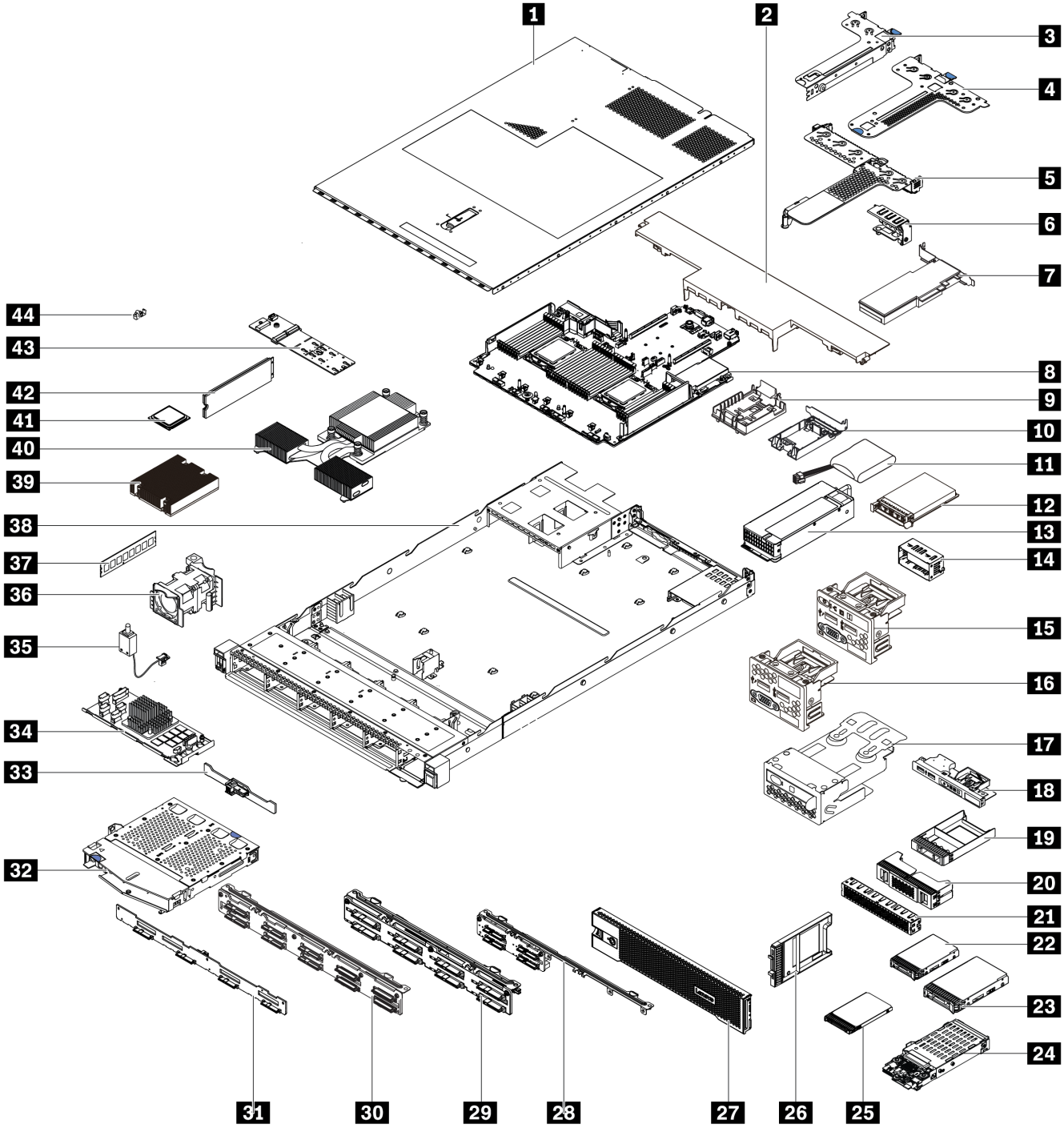

Figure 11. Server components

The parts listed in the following table are identified as one of the following:

- **Tier 1 customer replaceable unit (CRU):** Replacement of Tier 1 CRUs is your responsibility. If Lenovo installs a Tier 1 CRU at your request with no service agreement, you will be charged for the installation.
- **Tier 2 customer replaceable unit:** You may install a Tier 2 CRU yourself or request Lenovo to install it, at no additional charge, under the type of warranty service that is designated for your server.
- **Field replaceable unit (FRU):** FRUs must be installed only by trained service technicians.
- **Consumable and Structural parts:** Purchase and replacement of consumable and structural parts is your responsibility. If Lenovo acquires or installs a structural component at your request, you will be charged for the service.

Table 19. Parts listing

Index	Description	Tier 1 CRU	Tier 2 CRU	FRU	Consumable and Structural parts
For more information about ordering the parts shown in Server components: https://datacentersupport.lenovo.com/products/servers/thinksystem/sr645/7d2x/parts					
1	Top cover	√			
2	Standard air baffle				√
3	Riser assembly (LP)	√			
4	Riser assembly (LP+LP)	√			
5	Riser assembly (LP+FH)	√			
6	Rearwall bracket				√
7	PCIe adapter	√			
8	System board			√	
9	RAID super capacitor holder (on chassis)				√
10	RAID super capacitor holder (in riser cage)				√
11	RAID super capacitor	√			
12	OCP 3.0 Ethernet adapter	√			
13	Power supply unit	√			
14	Power supply unit filler				√
15	Front I/O assembly with diagnostics panel (right)	√			
16	Front I/O assembly	√			
17	LCD diagnostics panel assembly	√			
18	Front I/O assembly with diagnostics panel (top)	√			
19	1 x 2.5-inch drive bay filler				√
20	2 x 1 2.5-inch drive bay filler				√

Table 19. Parts listing (continued)

Index	Description	Tier 1 CRU	Tier 2 CRU	FRU	Consumable and Structural parts
21	2 x 3 2.5-inch drive bay filler				√
22	2.5-inch drive	√			
23	3.5-inch drive	√			
24	7 mm drive assembly (cage +backplanes)	√			
25	7mm drive	√			
26	7mm drive bay filler				√
27	Security bezel	√			
28	4 x 2.5-inch front drive backplane	√			
29	8 x 2.5-inch front drive backplane	√			
30	10 x 2.5-inch front drive backplane	√			
31	4 x 3.5-inch front drive backplane	√			
32	2 x 2.5-inch rear drive cage	√			
33	2 x 2.5-inch rear drive backplane	√			
34	Internal RAID module	√			
35	Intrusion switch cable	√			
36	Fan module	√			
37	Memory module	√			
38	Chassis			√	
39	Standard heat sink			√	
40	Performance heat sink (T-shape)			√	
41	Processor			√	
42	M.2 drive	√			
43	M.2 adapter	√			
44	M.2 retainer clip	√			

Power cords

Several power cords are available, depending on the country and region where the server is installed.

To view the power cords that are available for the server:

1. Go to: http://dcsc.lenovo.com/#/
2. Click **Preconfigured Model** or **Configure to order**.
3. Enter the machine type and model for your server to display the configurator page.
4. Click **Power → Power Cables** to see all line cords.

Notes:

- For your safety, a power cord with a grounded attachment plug is provided to use with this product. To avoid electrical shock, always use the power cord and plug with a properly grounded outlet.
- Power cords for this product that are used in the United States and Canada are listed by Underwriter's Laboratories (UL) and certified by the Canadian Standards Association (CSA).
- For units intended to be operated at 115 volts: Use a UL-listed and CSA-certified cord set consisting of a minimum of 18 AWG, Type SVT or SJT, three-conductor cord, a maximum of 15 feet in length and a parallel blade, grounding-type attachment plug rated 15 amperes, 125 volts.
- For units intended to be operated at 230 volts (U.S. use): Use a UL-listed and CSA-certified cord set consisting of a minimum of 18 AWG, Type SVT or SJT, three-conductor cord, a maximum of 15 feet in length and a tandem blade, grounding-type attachment plug rated 15 amperes, 250 volts.
- For units intended to be operated at 230 volts (outside the U.S.): Use a cord set with a grounding-type attachment plug. The cord set should have the appropriate safety approvals for the country in which the equipment will be installed.
- Power cords for a specific country or region are usually available only in that country or region.

Chapter 3. Internal cable routing

Some of the components in the server have internal cables and cable connectors. For details, see the following cable routing sections:

- CFF RAIR/HBA adapter cabling routing
- FIO cable routing
- Intrusion switch cable routing
- Super capacitor cable routing
- 7mm drive backplane cable routing (power & signal)
- M.2 drive backplane cable routing (power & signal)
- 2.5-inch/3.5-inch drive backplane (power)
- 2.5-inch/3.5-inch drive backplane (signal)

Read the following guidelines carefully before you connect any cables:

- Power off the server before you connect or disconnect any internal cables.
- See the documentation that comes with any external devices for additional cabling instructions. It might be easier for you to route cables before you connect the devices to the server.
- Cable identifiers of some cables are printed on the cables that come with the server and optional devices. Use these identifiers to connect the cables to the correct connectors.
- Ensure that the relevant cables pass through the cable clips.

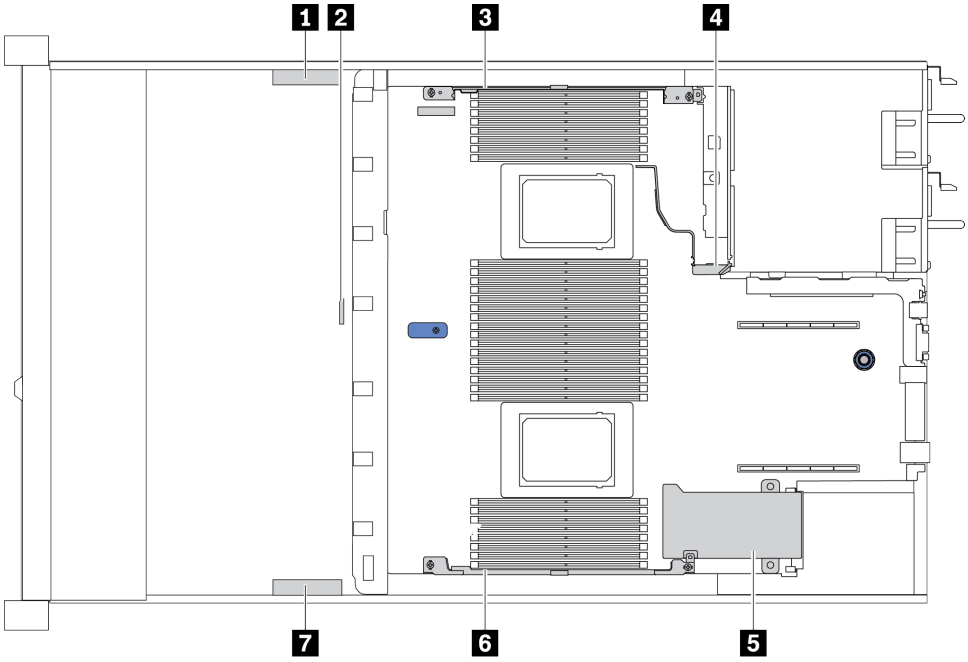

Cable holder	Route
1 3 4	Route to BP Pwr connector, Raid Pwr connector, and PCIe connectors (4, 5, 7, 8)

© Copyright Lenovo 2020

2	Route to intrusion switch cable
5 6 7	Route to FIO connector, LCD external connector, M.2 Pwr connector, VGA 2 connector, Front USB connector, PCIe connectors (1–3, 6, 9, 10), and Raid/HBA connectors

Note: Disengage all latches, release tabs, or locks on cable connectors when you disconnect cables from the system board. Failing to release them before removing the cables will damage the cable sockets on the system board, which are fragile. Any damage to the cable sockets might require replacing the system board.

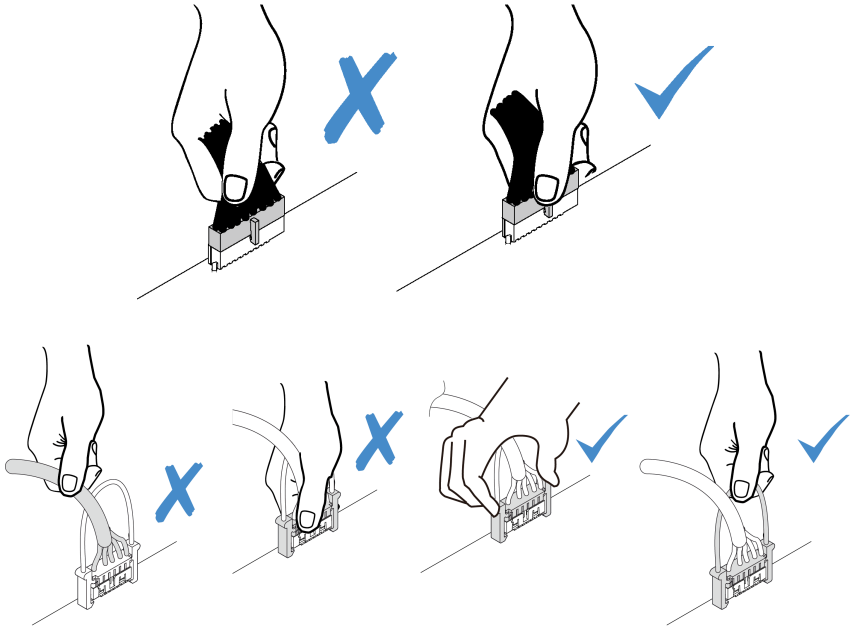

CFF RAIR/HBA adapter cabling routing

Use the section to understand the power cable routing for CFF RAID/HBA adapter.

Power cable routing for CFF RAID/HBA adapters

Note: The illustration only involves power cable routing, for signal cable routing of CFF RAID/HBA adapters, see 2.5-inch/3.5-inch drive backplane (signal)

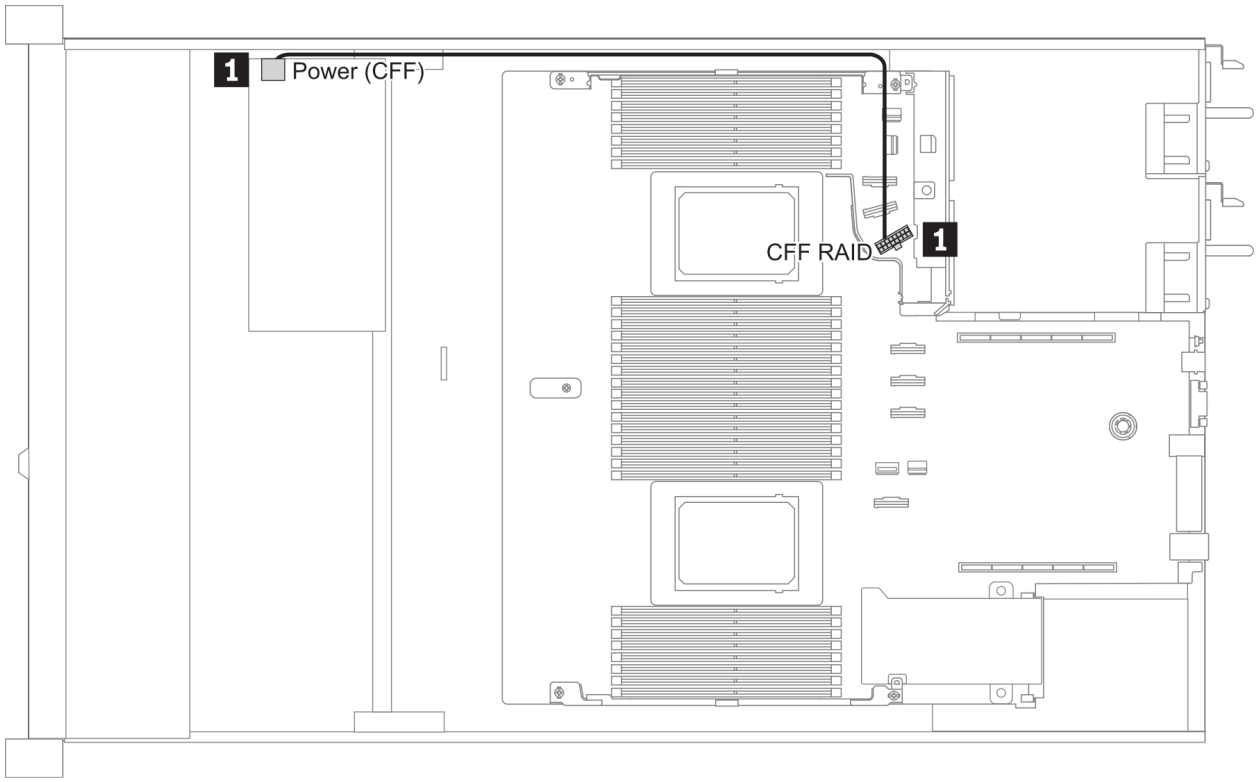

From	To
1 Power connector on the CFF RAID/HBA adapter	CFF RAID connector on the system board

FIO cable routing

Use the section to understand the cable routing for FIO.

Cable routing for FIO

Note: The illustration shows the cabling scenario for server models with four 3.5-inch front drive bays. Location of each connector on the front of the server varies by models. For detailed location of front I/O components for different models, see Front view.

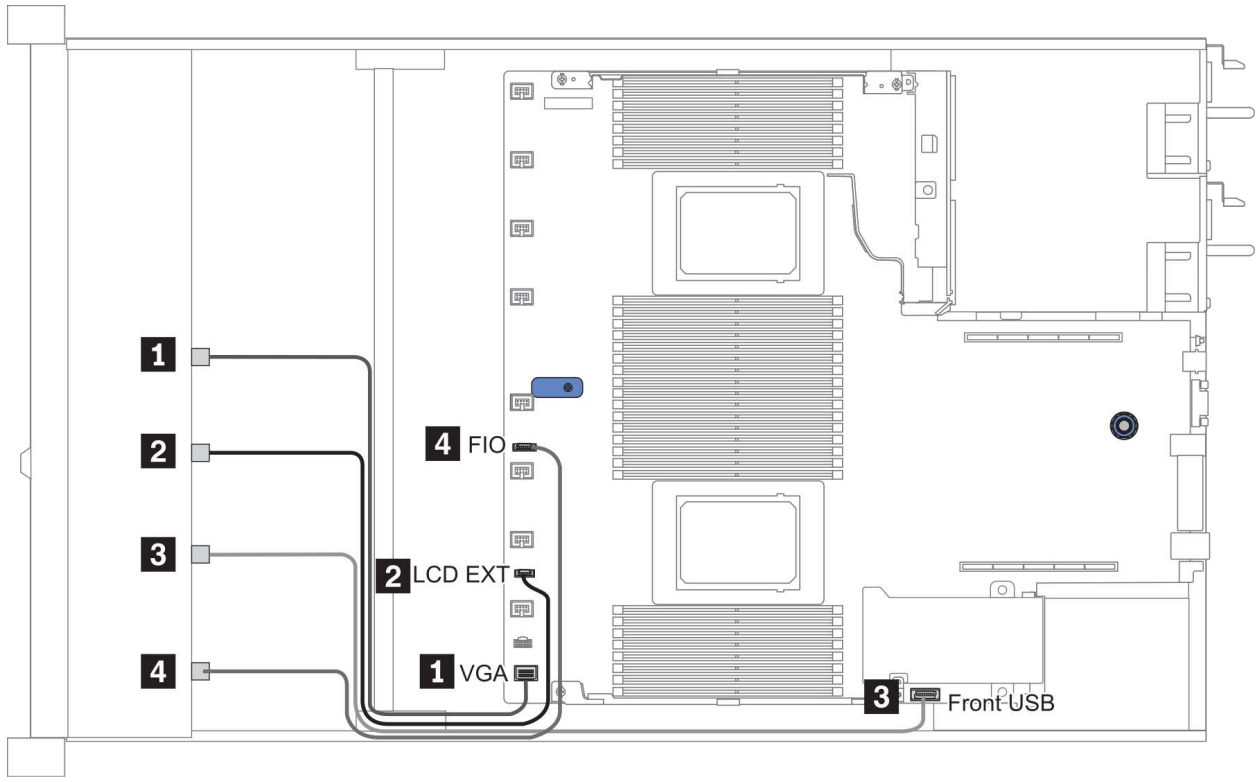

Figure 12. Cable routing for FIO

From	To
1 VGA cable	VGA connector on the system board
2 LCD external diagnostics handset cable	LCD EXT connector on the system board
3 USB cable	Front USB connector on the system board
4 Front diagnostic panel cable	FIO connector on the system board

Intrusion switch cable routing

Use the section to understand the cable routing for the intrusion switch.

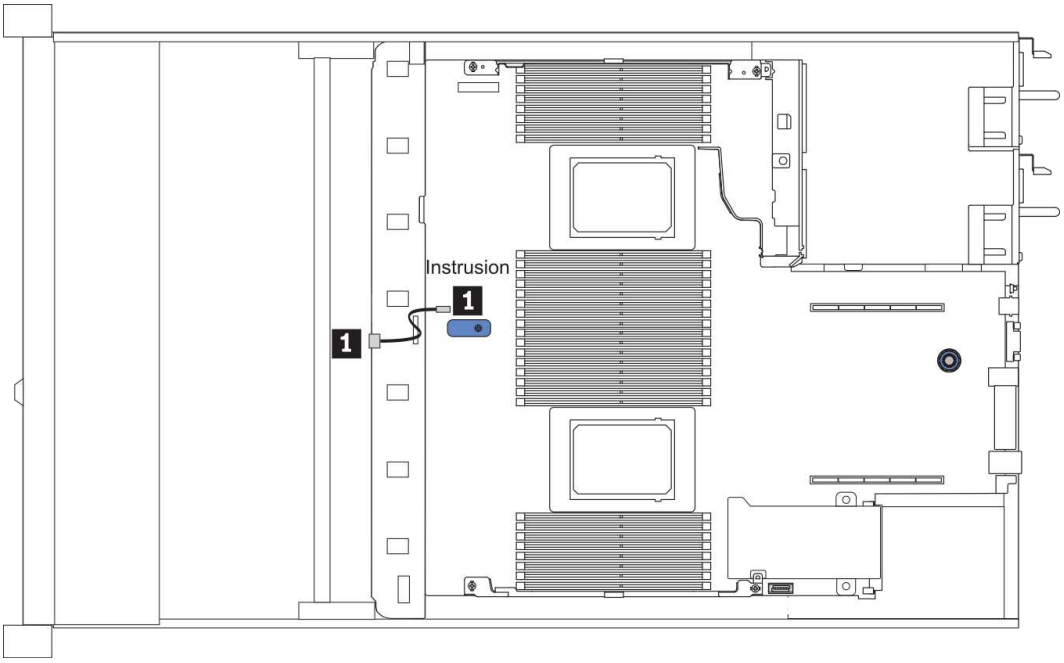

Figure 13. Intrusion switch cable routing

From	To
1 Intrusion switch cable on the fan cage	Intrusion switch connector on the system board

Super capacitor cable routing

Use the section to understand the cable routing for backplanes.

RAID super capacitor module location

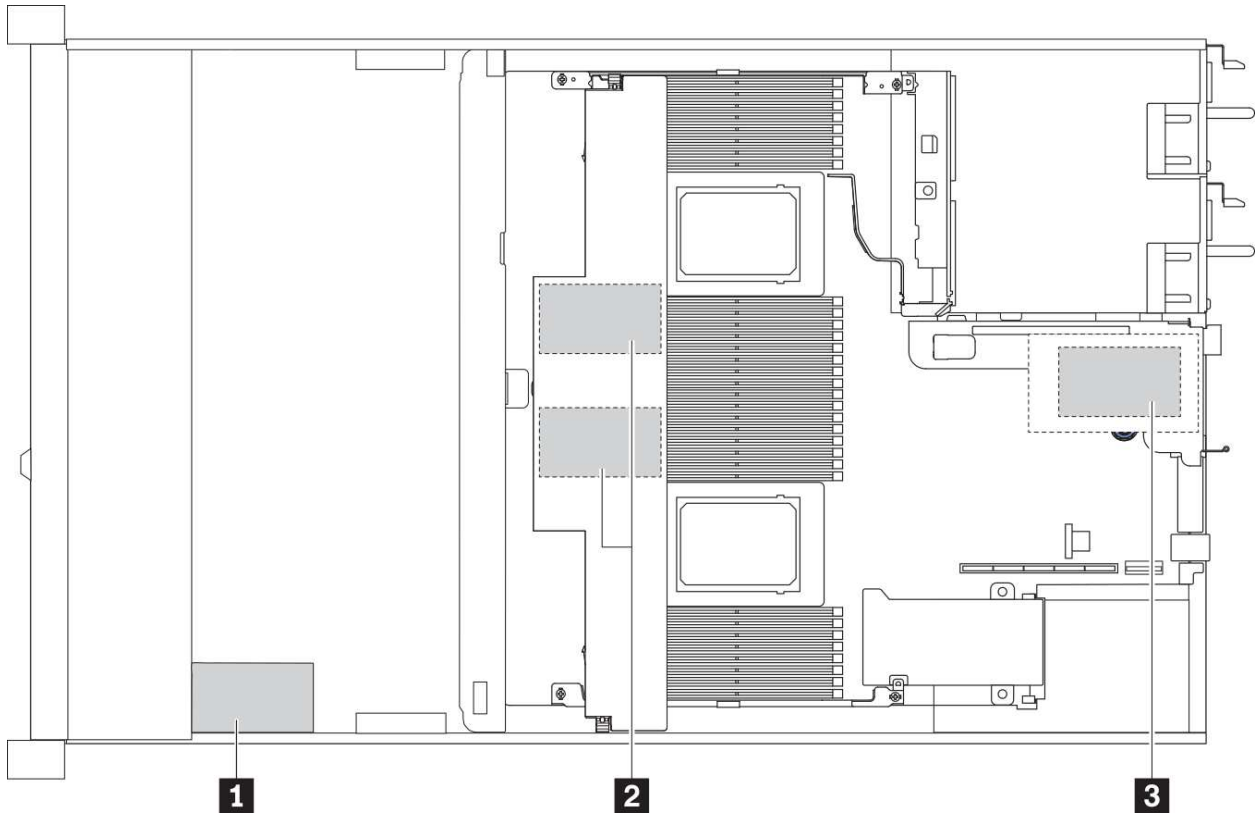

1	Super capacitor on the chassis
2	Super capacitors in the air baffle
3	Super capacitors in riser 3 assembly

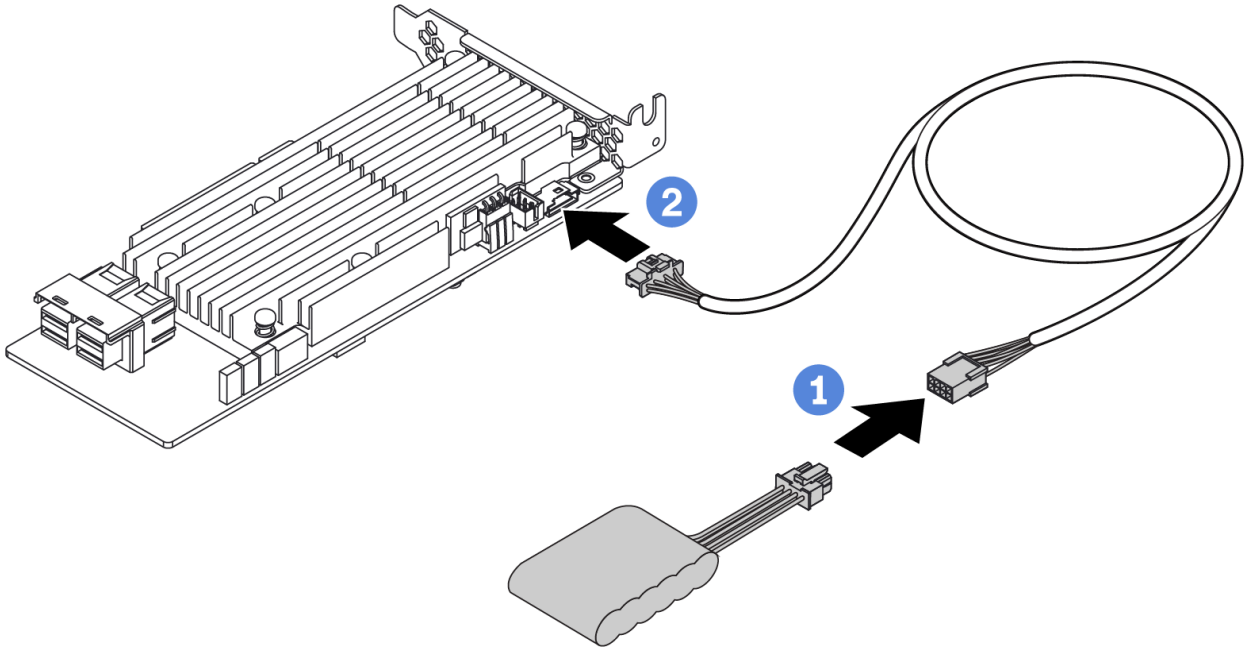

Figure 14. Power cable routing for super capacitor

Note: The super capacitor cable can either be long or short. Refer to Super capacitor installation rules for more information.

7mm drive backplane cable routing (power & signal)

This section provides cable routing information for the 7mm drives.

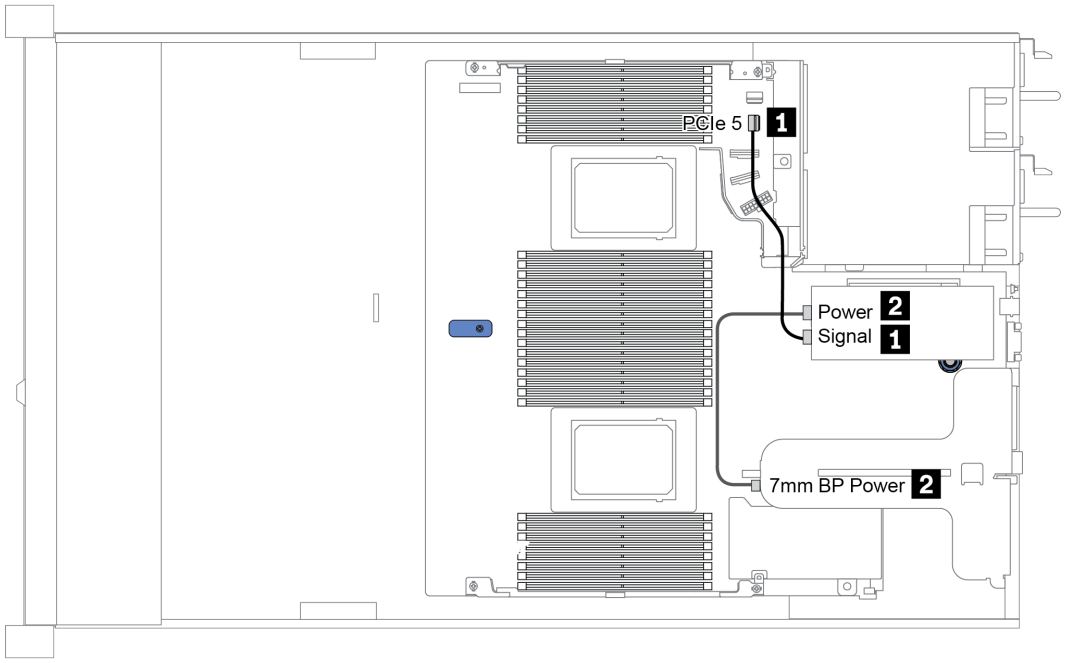

Figure 15. Cable routing for 7mm drives

From	To
1 7mm signal cable	PCIe connector 5 on the system board
2 Power cable	7mm power connector on riser 1 assembly

M.2 drive backplane cable routing (power & signal)

This section provides cable routing information for the M.2 drives.

Notes:

- M.2 drives can be installed on the chassis (scenario 1) or 3.5-inch front drive cage (scenario 2). The following illustration shows the cable connection for scenario 1. The cable connections for the other scenario is the same.
- M.2 signal cable can be connected to both PCIe connector 1 or PCIe connector 4 on the system board. The illustration shows the general scenario, the signal cable needs to be connected to PCIe connector 4 only when the server model is one of the following:
  - Server models with 10 x 2.5-inch front drive bays (AnyBay)
  - Server models with 10 x 2.5-inch front drive bays (NVMe)
  - Server models with 10 x 2.5-inch front drive bays (8AnyBay+2NVMe)

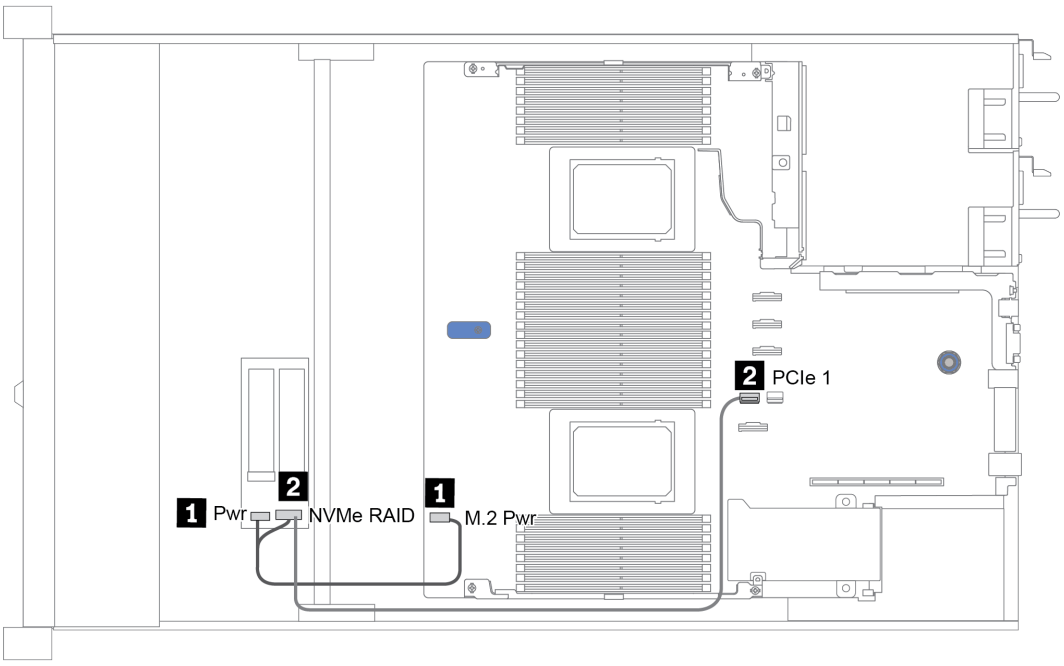

Figure 16. Cable routing for M.2 drives

From	To
1 Power cable	M.2 power connector on the system board
2 M.2 signal cable	PCIe connector 1 on the system board

2.5-inch/3.5-inch drive backplane (power)

Use the section to understand the power cable routing for 2.5-inch or 3.5-inch drive backplanes.

Power cable routing for 2.5-inch or 3.5-inch drive backplanes

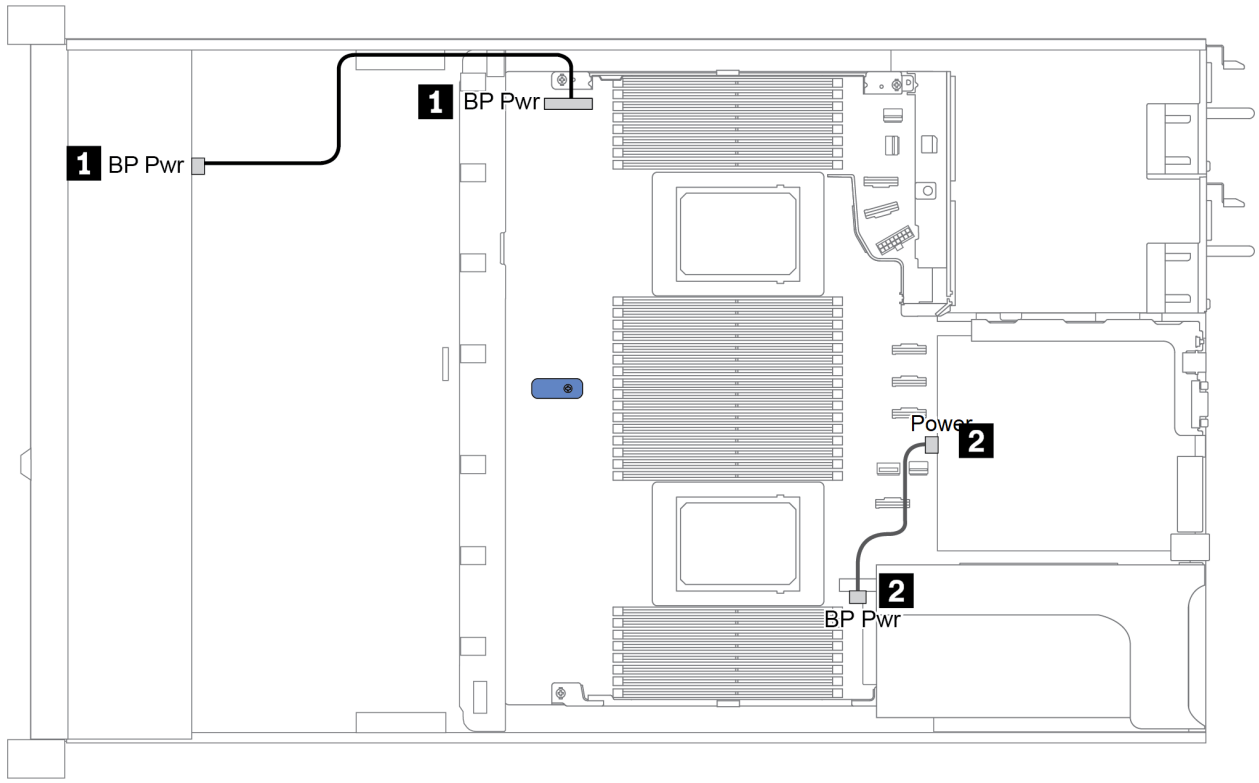

From	To
1 Power connector on the front drive backplane	BP power connector on the system board
2 Power connector on the rear drive backplane	Power connector on riser card on riser 1 assembly

2.5-inch/3.5-inch drive backplane (signal)

Use the section to understand the cable routing for signal cable connections for 2.5-inch/3.5-inch drive backplanes.

Your server supports the following server models with:

- 4 x 2.5-inch front drive bays (SAS/SATA)
- 8 x 2.5-inch front drive bays (SAS/SATA)
- 4 x 3.5-inch front drive bays (SAS/SATA)
- 4 x 3.5-inch front drive bays (AnyBay)
- 10 x 2.5-inch front drive bays (AnyBay)

Notes: The 10 x 2.5-inch AnyBay backplane can also be used on the following models:

- 10 x 2.5-inch front drive bays (NVMe)
- 10 x 2.5-inch front drive bays (8AnyBay + 2NVMe)
- 10 x 2.5-inch front drive bays (6SAS/SATA + 4AnyBay)
- 10 x 2.5-inch front drive bays (6SAS/SATA + 4NVMe)
- 10 x 2.5-inch front drive bays (6 SAS/SATA + 2 AnyBay + 2 NVMe)

4 x 2.5-inch front drive bays (SAS/SATA)

The server model is configured with one 4 x 2.5-inch SAS/SATA front drive backplane. Below lists all supported configurations with this front drive backplane.

Configuration option	Storage controller	
	Qty.	Type
Config. 1		
Config. 2	1	SFF 8i RAID/HBA

Depending on your server configurations, refer to one of the following sections for cable routing information.

Configuration 1 and 2: (front drive bays only)

Config.	Front BP	System board	Storage controller
			SFF 8i RAID/HBA
1	SAS 0	PCIe 2	
2	SAS 0, SAS 1		Gen 4: C 0 Gen 3: C 0, C 1

The following illustration shows the cable routing for the configuration 2, the routing for configuration 1 is similar. Connections between connectors: 1 ↔ 1, 2 ↔ 2, 3 ↔ 3, ... n ↔ n

Note: For models that support Gen 3 and Gen4 adapters in the same slot, the illustration shows only the cable routing information for Gen 4 adapters, the routing and connector information is similar for Gen 3 adapters.

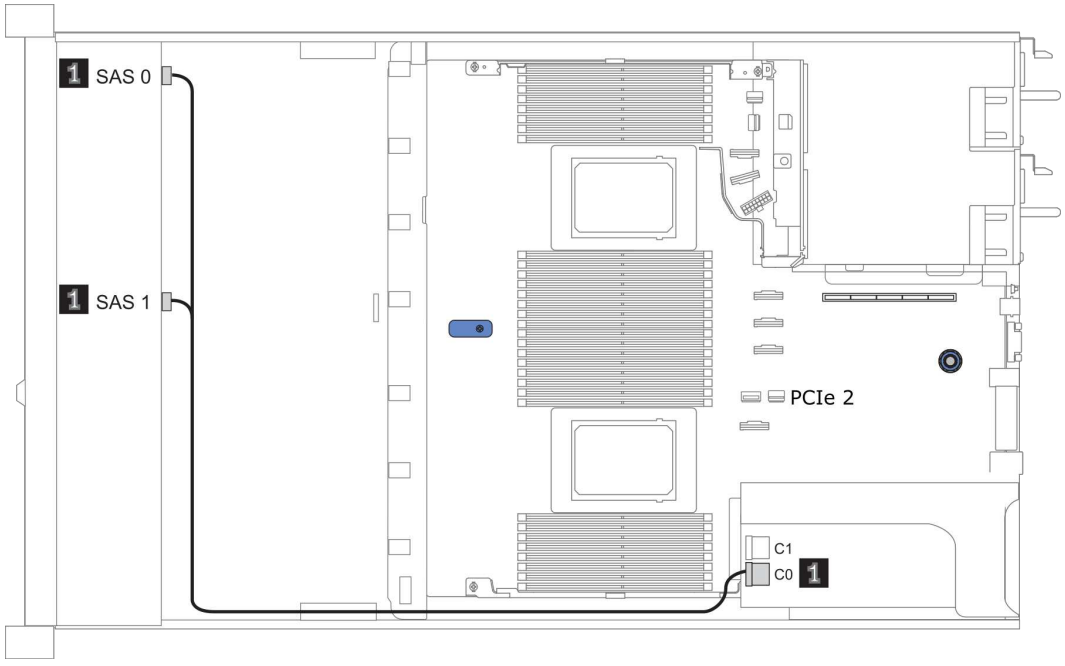

Figure 17. Cable routing for configuration 2

8 x 2.5-inch front drive bays (SAS/SATA)

The server model is configured with one 8 x 2.5-inch AnyBay front drive backplane. Below lists all supported configurations with this front drive backplane.

Configuration	Rear BP		Storage controller	
	Qty.	Type	Qty.	Type
Config. 1				
Config. 2			1	SFF 8i RAID/HBA
Config. 3			1	CFF 16i RAID/ HBA
Config. 4	1	2 x 2.5" SAS/SATA		
Config. 5	1	2 x 2.5" SAS/SATA	1	SFF 8i RAID
Config. 6	1	2 x 2.5" SAS/SATA	1	CFF 16i RAID/ HBA

Depending on your server configurations, refer to one of the following sections for cable routing information.

- Configuration 1, 2, and 3: front drive bays only
- Configuration 4, 5, and 6: front drive bays and rear drive bays

Configuration 1, 2, and 3: (front drive bays only)

Con-fig.	Front BP	System board	Storage controller	
			SFF 8i RAID/HBA	CFF 16i RAID/HBA
1	SAS 0	PCIe 2		
	SAS 1	PCIe 4		
2	SAS 0, SAS 1		Gen 4: C 0 Gen 3: C 0, C 1	
3	SAS 0			C 0
	SAS 1			C 1
		PCIe 8		MB

The following illustration shows the cable routing for the configuration 2, the routing for configuration 1 and 3 is similar. Connections between connectors: 1 ↔ 1, 2 ↔ 2, 3 ↔ 3, ... n ↔ n

Note: For models that support Gen 3 and Gen4 adapters at the same slot, the illustration shows only the cable routing information for Gen 4 adapters, the routing and connector information is similar for Gen 3 adapters.

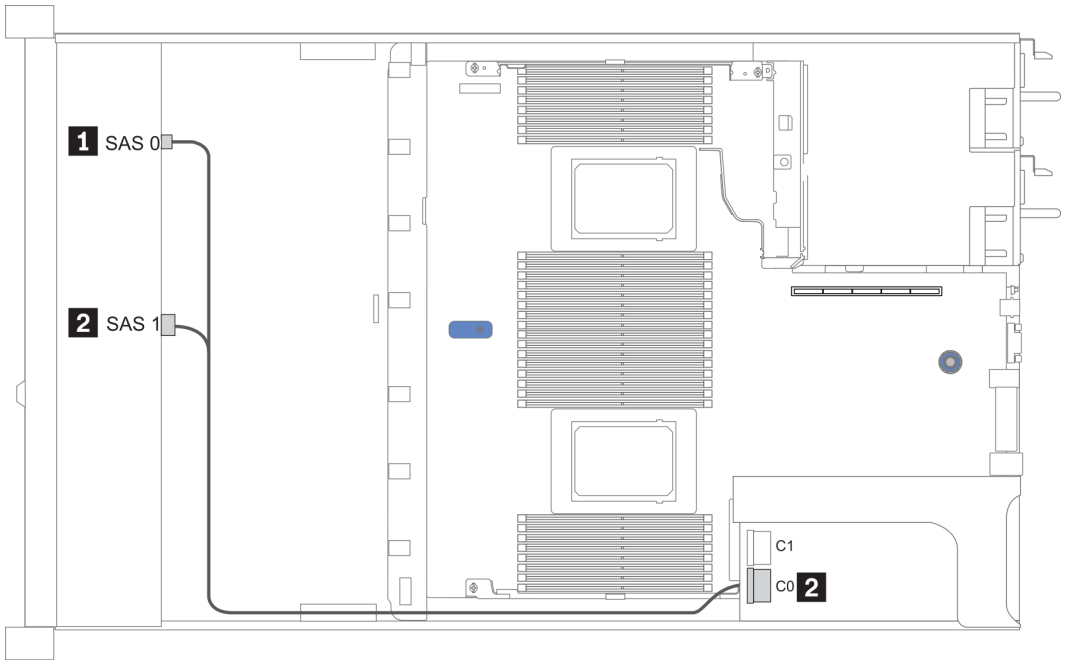

Figure 18. Cable routing for configuration 2

Configuration 4, 5, and 6: (front drive bays and rear drive bays)

Con-fig.	Front BP	Rear BP	System board	Storage controller	
				SFF 8i RAID	CFF 16i RAID/HBA
4	SAS 0		PCIe 2		
	SAS 1		PCIe 4		
		SAS	PCIe 5		
5	SAS 0, SAS 1			Gen 4: C 0 Gen 3: C 0, C 1	
		SAS	PCIe 5		
6	SAS 0				C 0
	SAS 1				C 1
			PCIe 8		MB
		SAS			C 3

The following illustration shows the cable routing for the configuration 6, the routing for configuration 4 and 5 is similar. Connections between connectors: 1 ↔ 1, 2 ↔ 2, 3 ↔ 3, ... n ↔ n

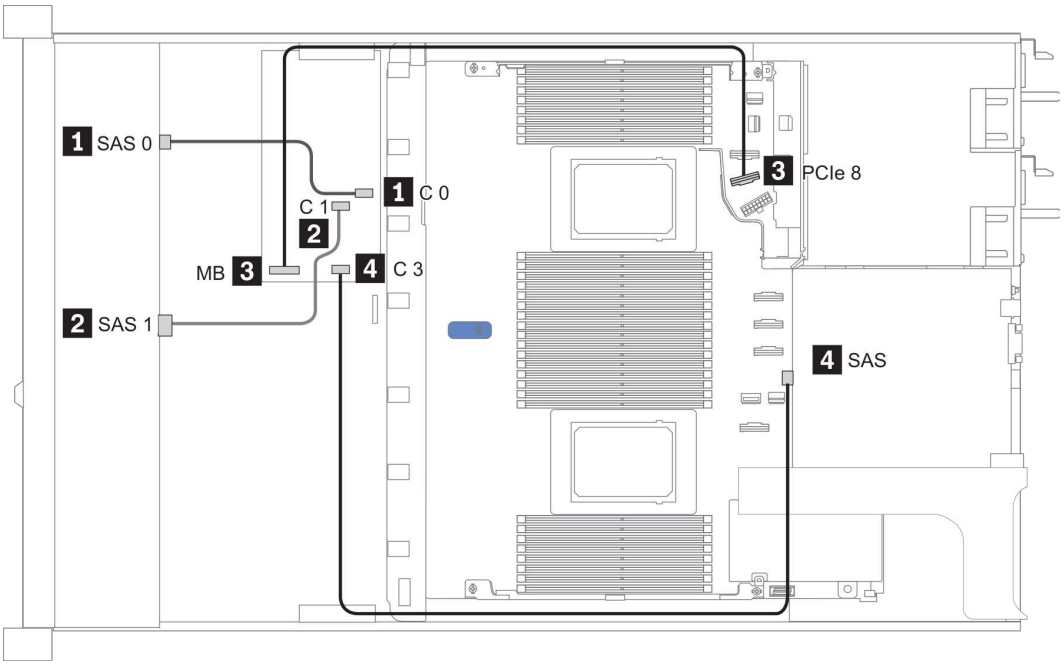

Figure 19. Cable routing for configuration 6

4 x 3.5-inch front drive bays (SAS/SATA)

The server model is configured with one 4 x 3.5-inch SAS/SATA front drive backplane. Below lists all supported configurations with this front drive backplane.

Configuration option	Rear BP		Storage controller	
	Qty.	Type	Qty.	Type
Config. 1				
Config. 2			1	SFF 8i RAID/HBA
Config. 3	1	2 x 2.5" SAS/SATA		
Config. 4	1	2 x 2.5" SAS/SATA	1	SFF 8i RAID/HBA
Config. 5	1	2 x 2.5" NVMe		
Config. 6	1	2 x 2.5" NVMe	1	SFF 8i RAID/HBA

Depending on your server configurations, refer to one of the following sections for cable routing information.

- Configuration 1 and 2: front drive bays only
- Configuration 3 to 6: front drive bays and rear drive bays

Configuration 1 and 2: (front drive bays only)

Front: one 4 x 3.5-inch SAS/SATA backplane

Config.	Front BP	System board	Storage controller
			SFF 8i RAID/HBA
1	SAS	PCIe 2	
2	SAS		Gen 4: C 0 Gen 3: C 0, C 1

The following illustration shows the cable routing for the configuration 2, the routing for configuration 1 is similar. Connections between connectors: 1 ↔ 1, 2 ↔ 2, 3 ↔ 3, ... n ↔ n

Note: For models that support Gen 3 and Gen4 adapters at the same slot, the illustration shows only the cable routing information for Gen 4 adapters, the routing and connector information is similar for Gen 3 adapters.

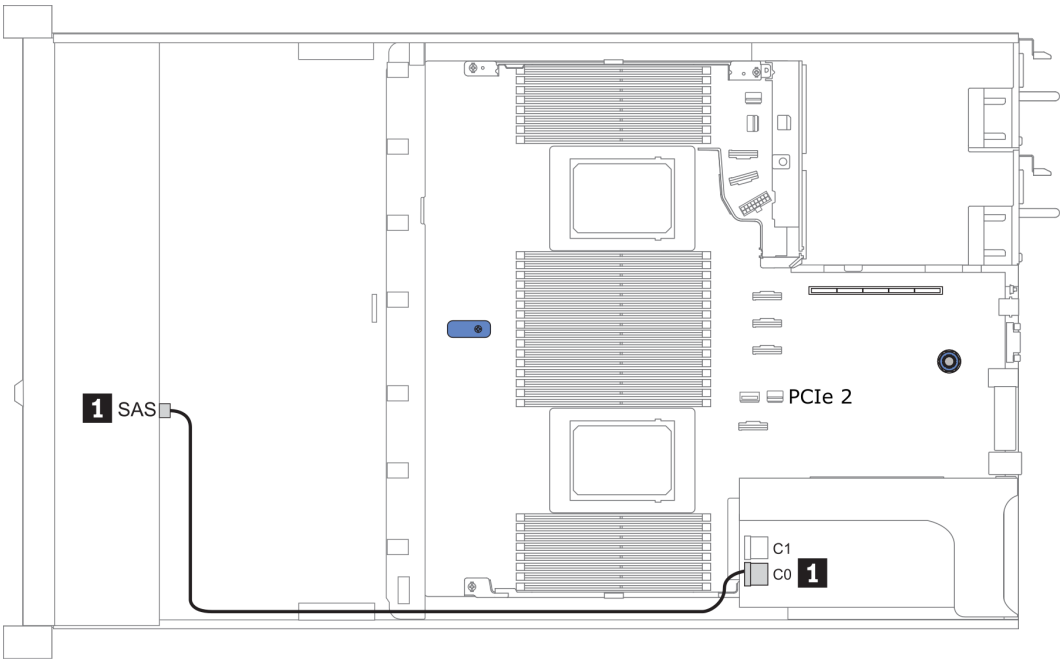

Figure 20. Cable routing for configuration 2

Configuration 3 and 4: (front drive bays and rear drive bays)

Front: one 4 x 3.5-inch SAS/SATA backplane

Rear: one 2 x 2.5-inch SAS/SATA backplane

Config.	Front BP	Rear BP	System board	Storage controller
				SFF 8i RAID/HBA
3	SAS		PCIe 2	
		SAS	PCIe 5	
4	SAS	SAS		Gen 4: C 0 Gen 3: C 0, C 1

The following illustration shows the cable routing for the configuration 4, the routing for configuration 3 is similar. Connections between connectors: 1 ↔ 1, 2 ↔ 2, 3 ↔ 3, ... n ↔ n

Note: For models that support Gen 3 and Gen4 adapters at the same slot, the illustration shows only the cable routing information for Gen 4 adapters, the routing and connector information is similar for Gen 3 adapters.

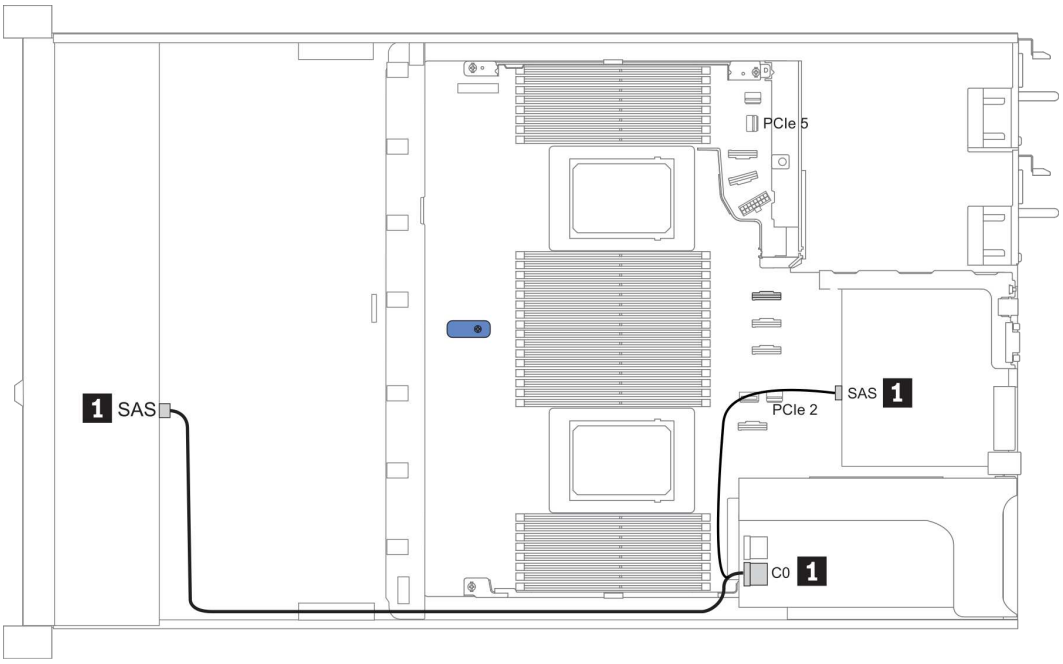

Figure 21. Cable routing for configuration 4

Front: one 4 x 3.5-inch SAS/SATA backplane

Rear: one 2 x 2.5-inch NVMe backplane

Con-fig.	Front BP	Rear BP	System board	Storage controller
				SFF 8i RAID/HBA
5	SAS		PCIe 2	
		NVMe 0, NVMe 1	PCIe 6	
6	SAS			Gen 4: C 0 Gen 3: C 0, C 1
		NVMe 0, NVMe 1	PCIe 6	

The following illustration shows the cable routing for the configuration 5, the routing for configuration 6 is similar. Connections between connectors: 1 ↔ 1, 2 ↔ 2, 3 ↔ 3, ... n ↔ n

Note: For models that support Gen 3 and Gen4 adapters at the same slot, the illustration shows only the cable routing information for Gen 4 adapters, the routing and connector information is similar for Gen 3 adapters.

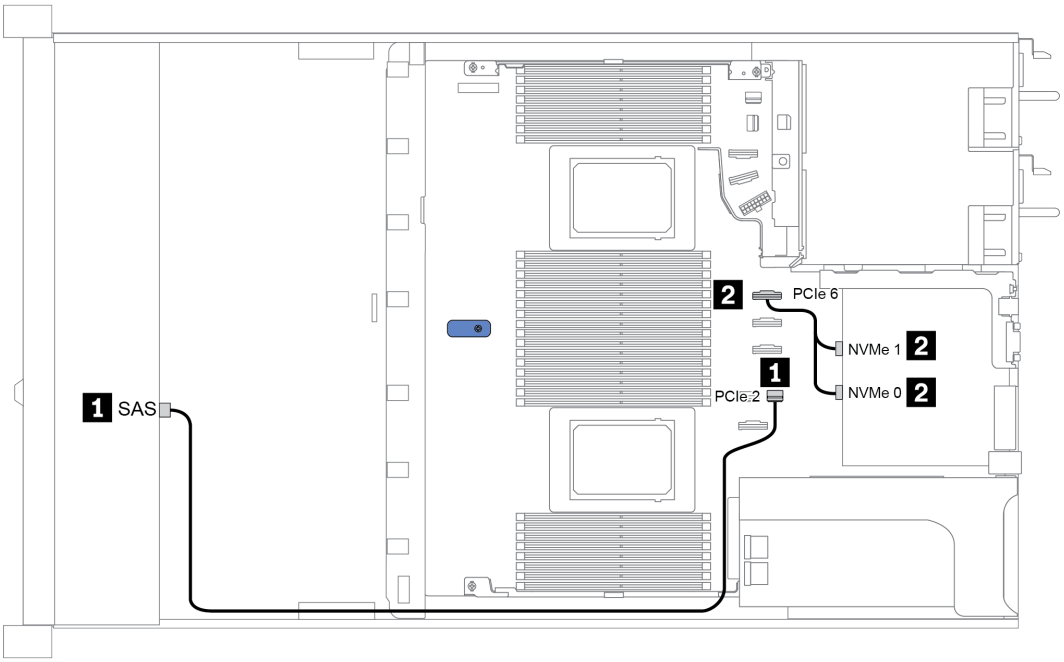

Figure 22. Cable routing for configuration 5

4 x 3.5-inch front drive bays (AnyBay)

The server model is configured with one 4 x 3.5-inch AnyBay front drive backplane. Below lists all supported configurations with this front drive backplane.

Configuration option	Rear BP		Storage controller	
	Qty.	Type	Qty.	Type
Config. 1				
Config. 2			1	SFF 8i RAID/HBA
Config. 3	1	2 x 2.5" SAS/SATA		
Config. 4	1	2 x 2.5" SAS/SATA	1	SFF 8i RAID/HBA
Config. 5	1	2 x 2.5" NVMe		
Config. 6	1	2 x 2.5" NVMe	1	SFF 8i RAID/HBA

Depending on your server configurations, refer to one of the following sections for cable routing information.

- Configuration 1 and 2: front drive bays only
- Configuration 3 to 6: front drive bays and rear drive bays

Configuration 1 and 2: (front drive bays only)

Front: one 4 x 3.5-inch AnyBay backplane

Con-fig.	Front BP	System board	Storage controller
			SFF 8i RAID/HBA
1	NVMe 0–1	PCIe 3	
	NVMe 2–3	PCIe 7	
	SAS	PCIe 2	
2	NVMe 0–1	PCIe 3	
	NVMe 2–3	PCIe 7	
	SAS		Gen 4: C 0 Gen 3: C 0, C 1

The following illustration shows the cable routing for the configuration 2, the routing for configuration 1 is similar. Connections between connectors: 1 ↔ 1, 2 ↔ 2, 3 ↔ 3, ... n ↔ n

Note: For models that support Gen 3 and Gen4 adapters at the same slot, the illustration shows only the cable routing information for Gen 4 adapters, the routing and connector information is similar for Gen 3 adapters.

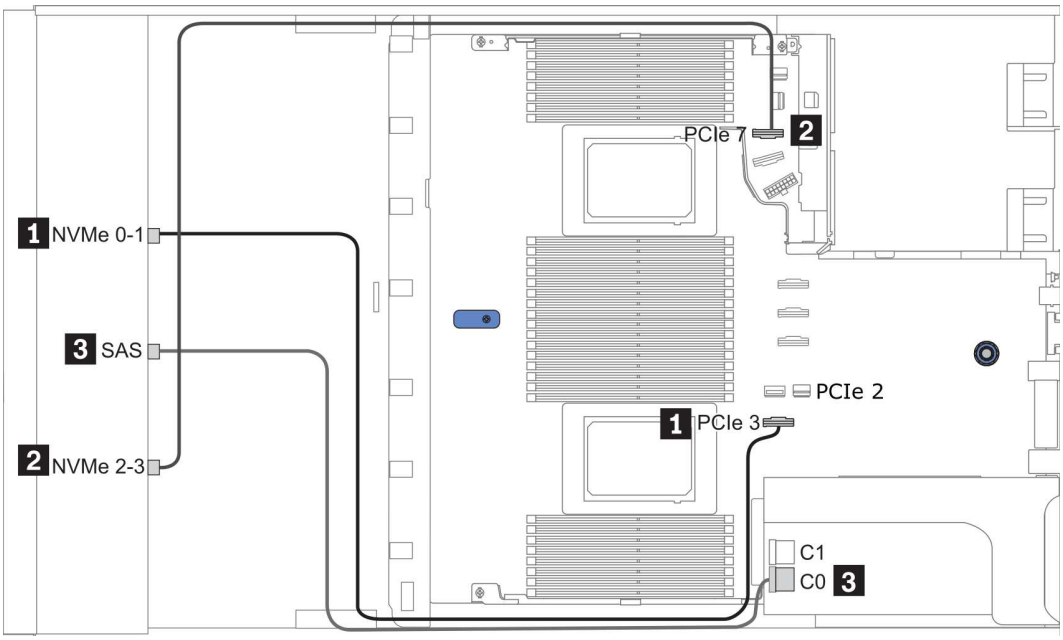

Figure 23. Cable routing for configuration 2

Configuration 3 and 4: (front drive bays and rear drive bays)

Front: one 4 x 3.5-inch AnyBay backplane

Rear: one 2 x 2.5-inch SAS/SATA backplane

Con-fig.	Front BP	Rear BP	System board	Storage controller
				SFF 8i RAID/HBA
3	NVMe 0–1		PCIe 3	
	NVMe 2–3		PCIe 7	
	SAS		PCIe 2	
		SAS	PCIe 5	
4	NVMe 0–1		PCIe 3	
	NVMe 2–3		PCIe 7	
	SAS	SAS		Gen 4: C 0 Gen 3: C 0, C 1

The following illustration shows the cable routing for the configuration 4, the routing for configuration 3 is similar. Connections between connectors: 1 ↔ 1, 2 ↔ 2, 3 ↔ 3, ... n ↔ n

Note: For models that support Gen 3 and Gen4 adapters at the same slot, the illustration shows only the cable routing information for Gen 4 adapters, the routing and connector information is similar for Gen 3 adapters.

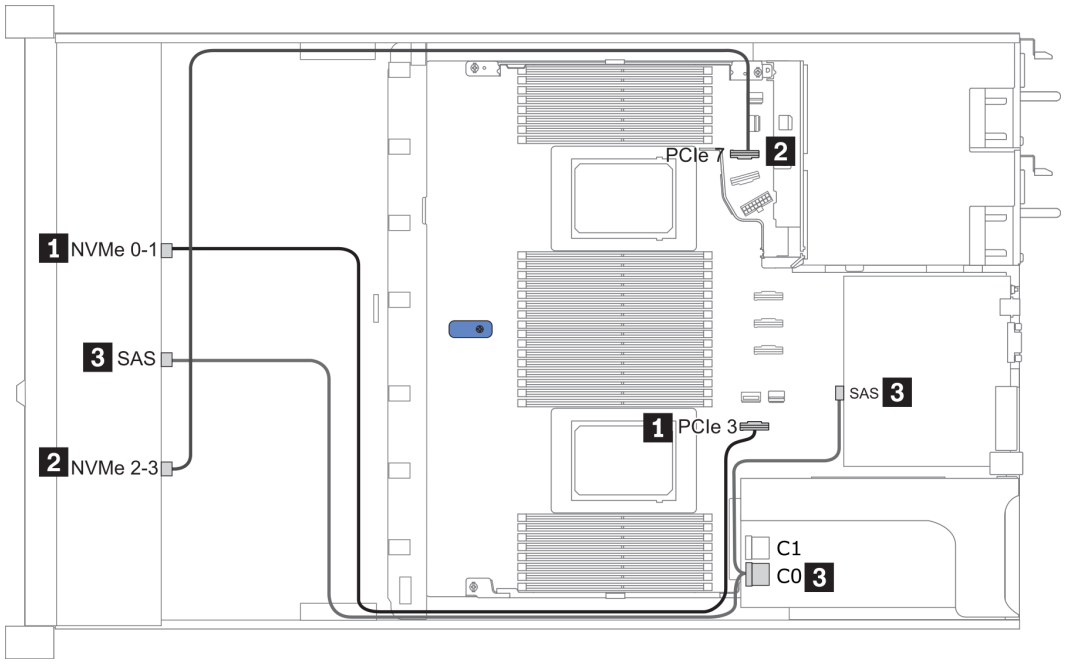

Figure 24. Cable routing for configuration 4

Front: one 4 x 3.5-inch AnyBay backplane

Rear: one 2 x 2.5-inch NVMe backplane

Con-fig.	Front BP	Rear BP	System board	Storage controller
				SFF 8i RAID/HBA
5	NVMe 0–1		PCIe 3	
	NVMe 2–3		PCIe 7	
	SAS		PCIe 2	
		NVMe 0, NVMe 1	PCIe 6	
6	NVMe 0–1		PCIe 3	
	NVMe 2–3		PCIe 7	
	SAS			Gen 4: C 0 Gen 3: C 0, C 1
		NVMe 0, NVMe 1	PCIe 6	

The following illustration shows the cable routing for the configuration 6, the routing for configuration 5 is similar. Connections between connectors: 1 ↔ 1, 2 ↔ 2, 3 ↔ 3, ... n ↔ n

Note: For models that support Gen 3 and Gen4 adapters at the same slot, the illustration shows only the cable routing information for Gen 4 adapters, the routing and connector information is similar for Gen 3 adapters.

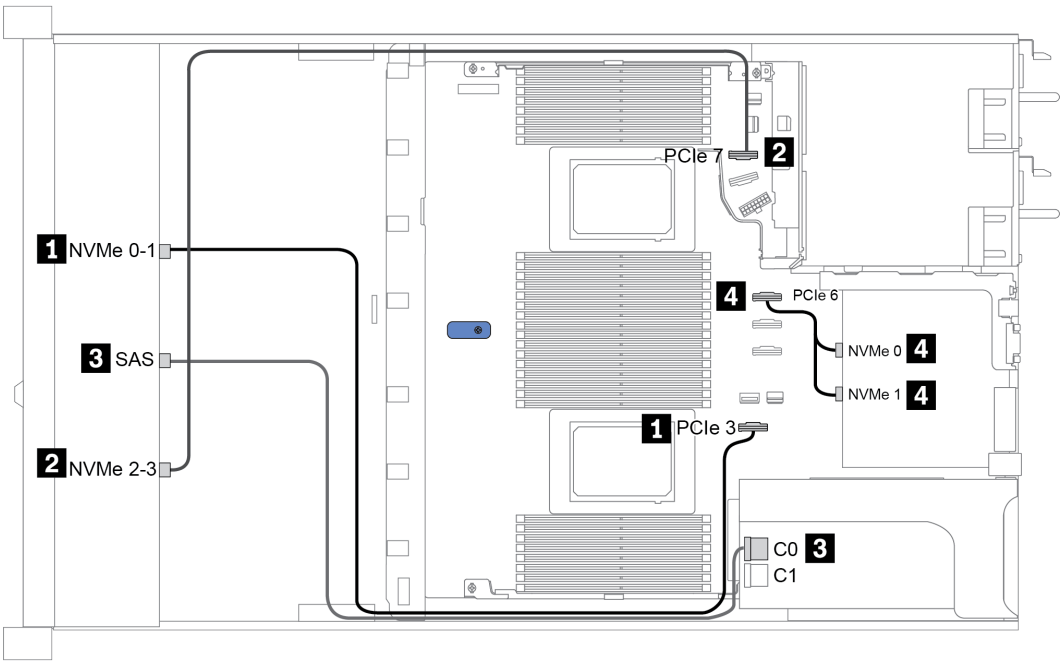

Figure 25. Cable routing for configuration 6

10 x 2.5-inch front drive bays (AnyBay)

The server model is configured with one 10 x 2.5-inch AnyBay front drive backplane. Below lists all supported configurations with this front drive backplane.

Configuration option	Front BP		Rear BP		Storage controller	
	Qty.	Onboard	Qty.	Onboard	Qty.	Type
Config. 1	1	10 NVMe			1	SFF 16i RAID/HBA
Config. 2	1	10 NVMe	1		1	SFF 16i RAID/HBA

Table 20. Cable routing information for configuration 1 and 2

Config.	Front BP	Rear BP	System board	Storage controller
				SFF 16i RAID/HBA
1	NVMe 0-1		PCIe 1, PCIe 2	
	NVMe 2-3		PCIe 3	
	NVMe 4-5		PCIe 7	
	NVMe 6-7		PCIe 8	
	NVMe 8-9		PCIe 6	
	SAS 0, SAS 1			Gen 4: C 0 Gen 3: C 0, C 1
	SAS 2			Gen 3: C 2
2	NVMe 0-1		PCIe 1, PCIe 2	
	NVMe 2-3		PCIe 3	
	NVMe 4-5		PCIe 7	
	NVMe 6-7		PCIe 8	
	NVMe 8-9		PCIe 6	
	SAS 0, SAS 1			Gen 4: C 0 Gen 3: C 0, C 1
	SAS 2	SAS		Gen 4: C 1 Gen 3: C 2, C 3

The following illustration shows the cable routing for the configuration 1, the routing for configuration 2 is similar. Connections between connectors: 1 ↔ 1, 2 ↔ 2, 3 ↔ 3, ... n ↔ n

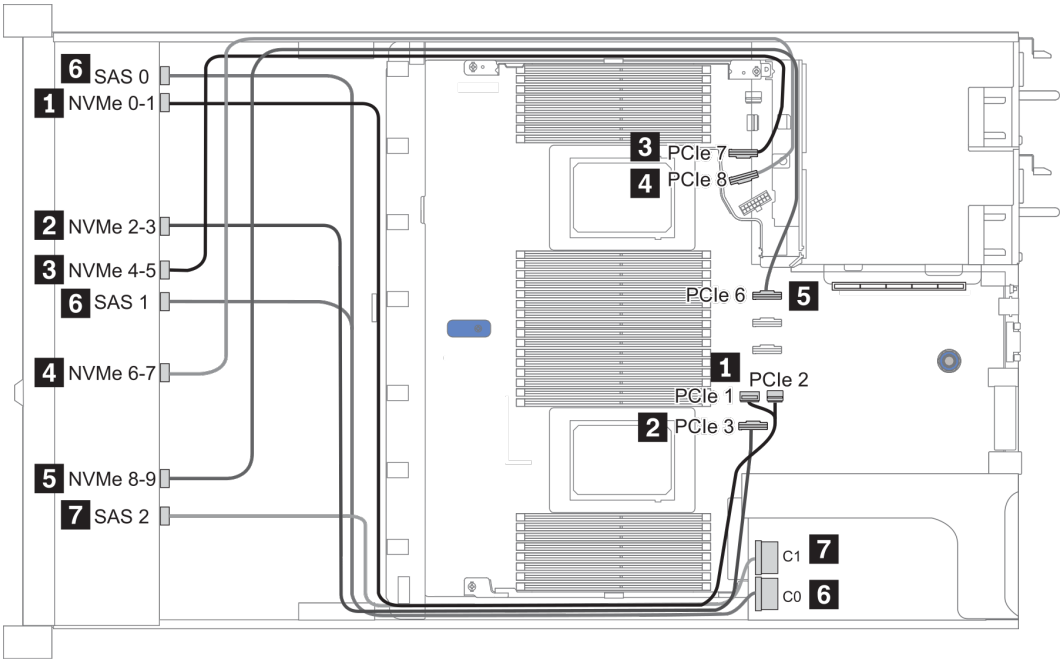

Figure 26. Cable routing for configuration 1

10 x 2.5-inch front drive bays (NVMe)

The server model is configured with one 10 x 2.5-inch AnyBay front drive backplane. Below lists all supported configurations with this front drive backplane.

Note: The AnyBay backplane is used as a pure NVMe backplane.

Configuration options	Rear BP	
	Qty.	Type
Config. 1		
Config. 2	1	2 x 2.5" SAS/SATA

Table 21. Cable routing information for configuration 1 and 2

Config.	Front BP	Rear BP	System board
1	NVMe 0-1		PCIe 1, PCIe 2
	NVMe 2-3		PCIe 3
	NVMe 4-5		PCIe 7
	NVMe 6-7		PCIe 8
	NVMe 8-9		PCIe 6
2	NVMe 0-1		PCIe 1, PCIe 2
	NVMe 2-3		PCIe 3
	NVMe 4-5		PCIe 7
	NVMe 6-7		PCIe 8
	NVMe 8-9		PCIe 6
		SAS	PCIe 5

The following illustration shows the cable routing for the configuration 1, the routing for configuration 2 is similar.

Connections between connectors: 1 ↔ 1, 2 ↔ 2, 3 ↔ 3, ... n ↔ n

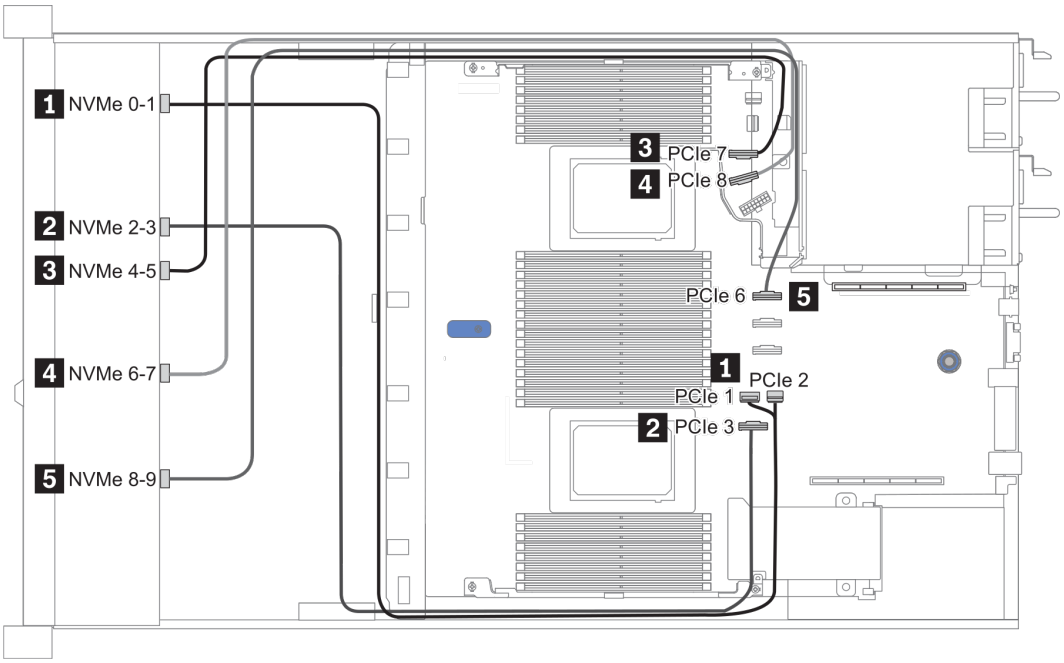

Figure 27. Cable routing for configuration 2

10 x 2.5-inch front drive bays (8AnyBay + 2NVMe)

The server model is configured with one 10 x 2.5-inch AnyBay front drive backplane. Below lists all supported configurations with this front drive backplane.

Note: 10 AnyBay backplane is used as “8AnyBay + 2NVMe” backplane.

Configuration option	Storage controller	
	Qty.	Type
Config. 1		
Config. 2	1	SFF 8i RAID/HBA

Table 22. Cable routing information for configuration 1 and 2

Config.	Front BP	System board	Storage controller
			SFF 8i RAID/HBA
1	NVMe 0-1	PCIe 1, PCIe 2	
	NVMe 2-3	PCIe 3	
	NVMe 4-5	PCIe 7	
	NVMe 6-7	PCIe 8	
	NVMe 8-9	PCIe 6	
	SAS 0	PCIe 4	
	SAS 1	PCIe 5	
2	NVMe 0-1	PCIe 1, PCIe 2	
	NVMe 2-3	PCIe 3	
	NVMe 4-5	PCIe 7	
	NVMe 6-7	PCIe 8	
	NVMe 8-9	PCIe 6	
	SAS 0, SAS 1		Gen 4: C 0 Gen 3: C 0, C 1

The following illustration shows the cable routing for the configuration 2, the routing for configuration 1 is similar. Connections between connectors: 1 ↔ 1, 2 ↔ 2, 3 ↔ 3, ... n ↔ n

Note: For models that support Gen 3 and Gen4 adapters at the same slot, the illustration shows only the cable routing information for Gen 4 adapters, the routing and connector information is similar for Gen 3 adapters.

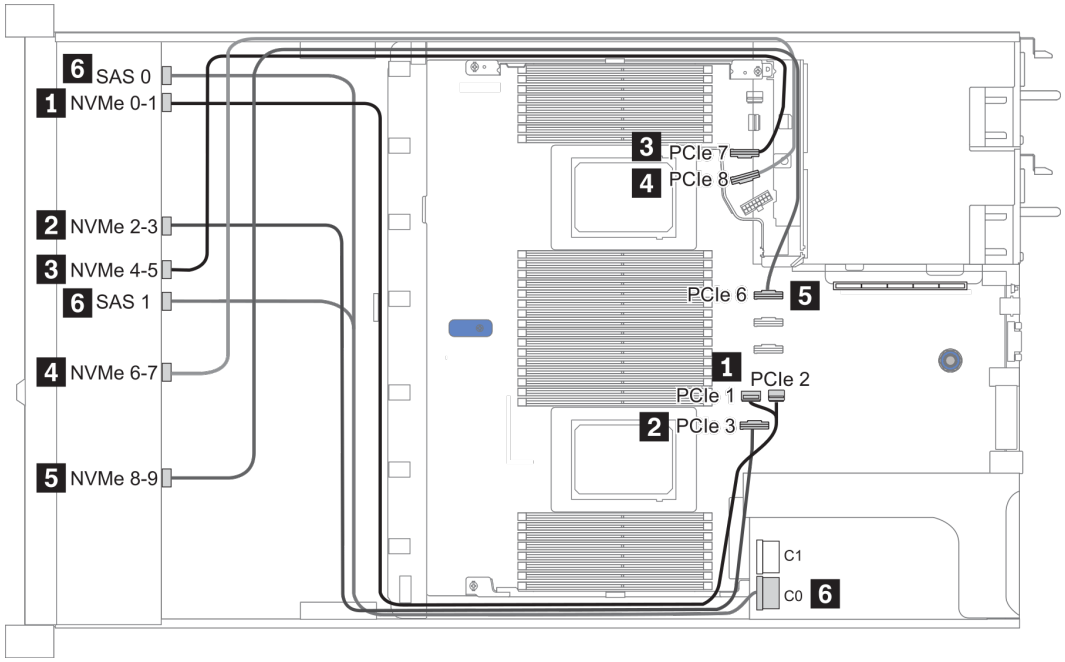

Figure 28. Cable routing for configuration 1

10 x 2.5-inch front drive bays (6SAS/SATA + 4AnyBay)

The server model is configured with one 10 x 2.5-inch AnyBay front drive backplane. Below lists all supported configurations with this front drive backplane.

Note: The AnyBay backplane is used as “6 SAS/SATA + 4 AnyBay” backplane.

Configuration option	Rear BP		Storage controller	
	Qty.	Type	Qty.	Type
Config. 1				
Config. 2			1	SFF 16i RAID/HBA
Config. 3			1	CFF 16i RAID/HBA
Config. 4	1	2 x 2.5" SAS/SATA		
Config. 5	1	2 x 2.5" SAS/SATA	1	CFF 16i RAID/HBA

Depending on your server configurations, refer to one of the following sections for cable routing information.

- Configuration 1, 2, and 3: front drive bays only
- Configuration 4 and 5: front drive bays and rear drive bays

Configuration 1, 2, and 3: (front drive bays only)

Con-fig.	Front BP	System board	Storage controller	
			SFF 16i RAID/HBA	CFF 16i RAID/HBA
1	NVMe 0-1	PCIe 3		
	NVMe 2–3	PCIe 7		
	SAS 0	PCIe 2		
	SAS 1	PCIe 4		
	SAS 2	PCIe 5		
2	NVMe 0–1	PCIe 3		
	NVMe 2–3	PCIe 7		
	SAS 0, SAS 1		Gen 4: C 0 Gen 3: C 0, C 1	
	SAS 2		Gen 4: C 1 Gen 3: C 2, C 3	
3	NVMe 0–1	PCIe 3		
	NVMe 2–3	PCIe 7		
	SAS 0			C 0
	SAS 1			C 1
	SAS 2			C 2
		PCIe 8		MB

The following illustration shows the cable routing for the configuration 2, the routing for configurations 1 and 3 is similar. Connections between connectors: 1 ↔ 1, 2 ↔ 2, 3 ↔ 3, ... n ↔ n

Note: For models that support Gen 3 and Gen4 adapters at the same slot, the illustration shows only the cable routing information for Gen 4 adapters, the routing and connector information is similar for Gen 3 adapters.

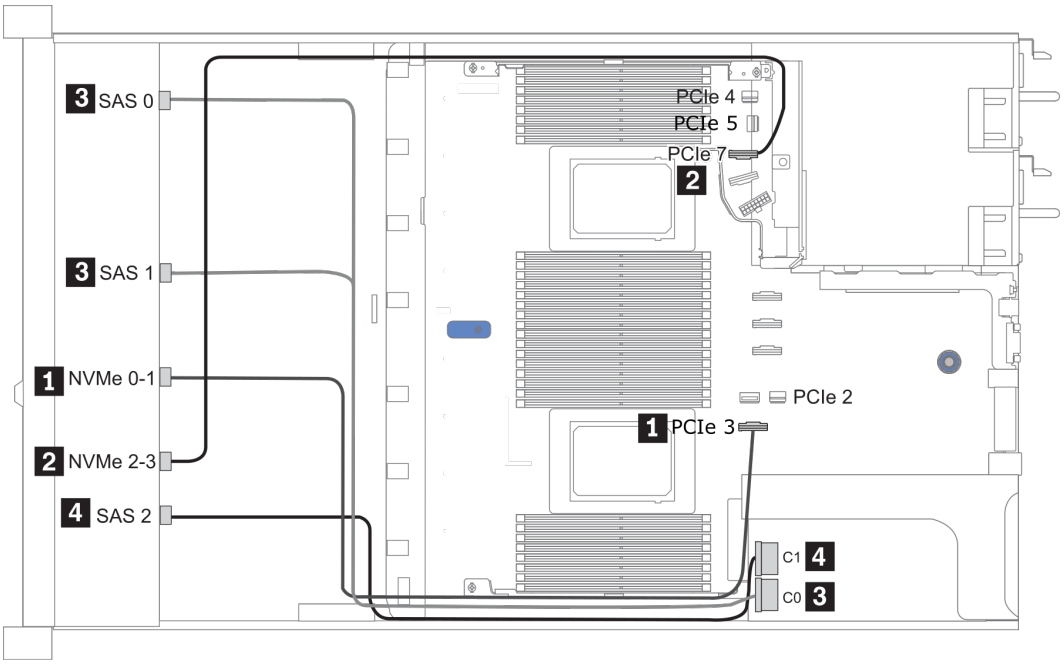

Figure 29. Cable routing for configuration 2

Configurations 4 and 5: (front drive bays and rear drive bays)

Config.	Front BP	Rear BP	System board	Storage controller
				CFF 16i RAID/HBA
4	NVMe 0-1		PCIe 3	
	NVMe 2–3		PCIe 7	
	SAS 0		PCIe 2	
	SAS 1		PCIe 4	
	SAS 2	SAS	PCIe 5	
5	NVMe 0–1		PCIe 3	
	NVMe 2–3		PCIe 7	
	SAS 0			C 0
	SAS 1			C 1
	SAS 2			C 2
		SAS		C 3
			PCIe 8	MB

The following illustration shows the cable routing for the configuration 5, the routing for configurations 4 is similar. Connections between connectors: 1 ↔ 1, 2 ↔ 2, 3 ↔ 3, ... n ↔ n

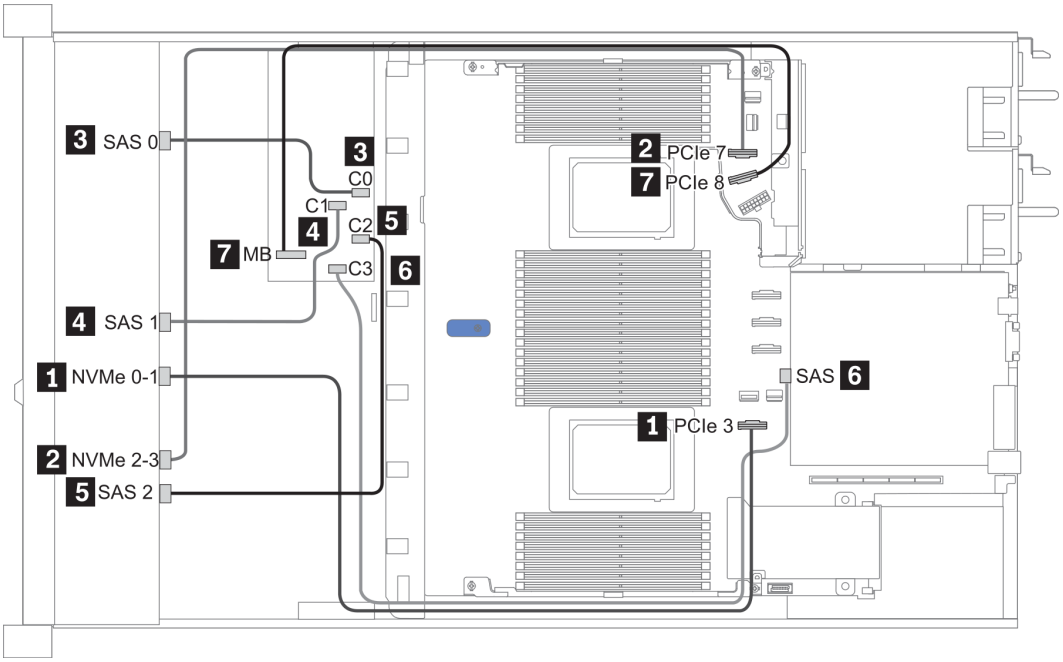

Figure 30. Cable routing for configuration 5

10 x 2.5-inch front drive bays (6SAS/SATA + 4NVMe)

The server model is configured with one 10 x 2.5-inch AnyBay front drive backplane. Below lists all supported configurations with this front drive backplane.

Note: The AnyBay backplane is used as “6 SAS/SATA + 4 NVMe” backplane.

Configuration option	Rear BP	
	Qty.	Type
Config. 1	1	2 x 2.5" SAS/SATA

Cable routing information for configuration 1

Config.	Front BP	Rear BP	System board
1	NVMe 0-1		PCIe 3
	NVMe 2–3		PCIe 7
	SAS 0		PCIe 2
	SAS 1		PCIe 4
		SAS	PCIe 5

The following illustration shows the cable routing for the configuration 1. Connections between connectors: 1 ↔ 1, 2 ↔ 2, 3 ↔ 3, ... n ↔ n

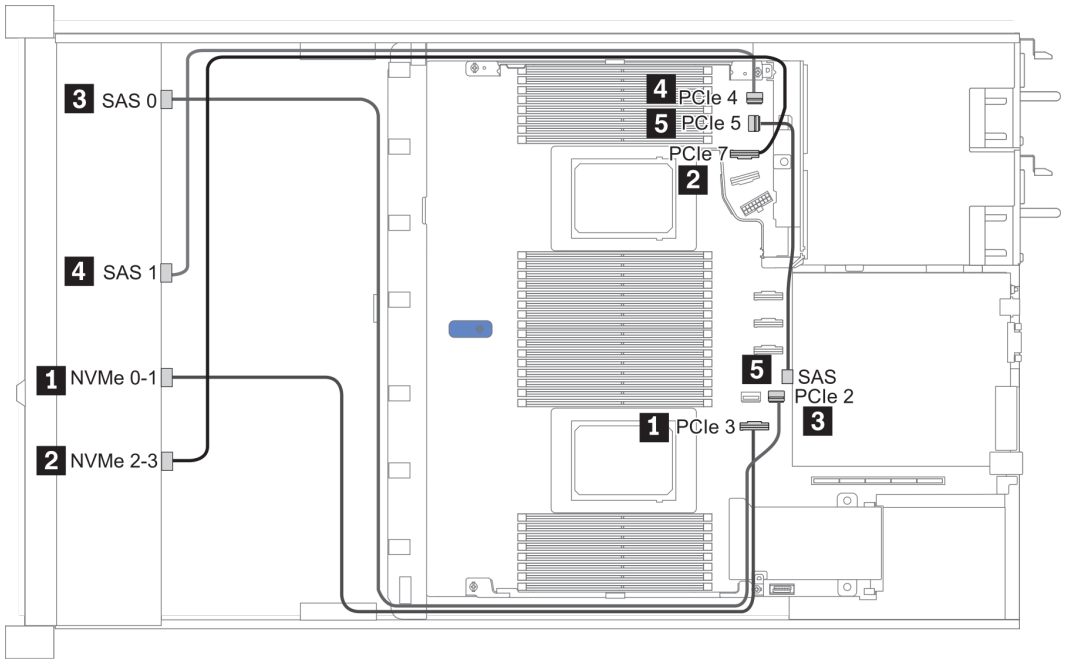

Figure 31. Cable routing for configuration 1

10 x 2.5-inch front drive bays (6 SAS/SATA + 2 AnyBay + 2 NVMe)

The server model is configured with one 10 x 2.5-inch AnyBay front drive backplane. Below lists all supported configurations with this front drive backplane.

Note: The AnyBay backplane is used as “6 SAS/SATA + 2 AnyBay + 2 NVMe” backplane.

Configuration option	Storage controller	
	Qty.	Type
Config. 1		
Config. 2	1	SFF 8i RAID/HBA
Config. 3	1	CFF 16i RAID/HBA

Cable routing information for configuration 1, 2, and 3

Con-fig.	Front BP	System board	Storage controller	
			SFF 8i RAID/HBA	CFF 16i RAID/HBA
1	NVMe 0–1	PCIe 3		
	NVMe 2–3	PCIe 7		
	SAS 0	PCIe 2		
	SAS 1	PCIe 4		
2	NVMe 0–1	PCIe 3		
	NVMe 2–3	PCIe 7		
	SAS 0, SAS 1		Gen 4: C 0 Gen 3: C 0, C 1	
3	NVMe 0–1	PCIe 3		
	NVMe 2–3	PCIe 7		
	SAS 0			C 0
	SAS 1			C 1
		PCIe 8		MB

The following illustration shows the cable routing for the configuration 3, the routing for configurations 1 and 2 is similar. Connections between connectors: 1 ↔ 1, 2 ↔ 2, 3 ↔ 3, ... n ↔ n

Note: For models that support Gen 3 and Gen4 adapters at the same slot, the illustration shows only the cable routing information for Gen 4 adapters, the routing and connector information is similar for Gen 3 adapters.

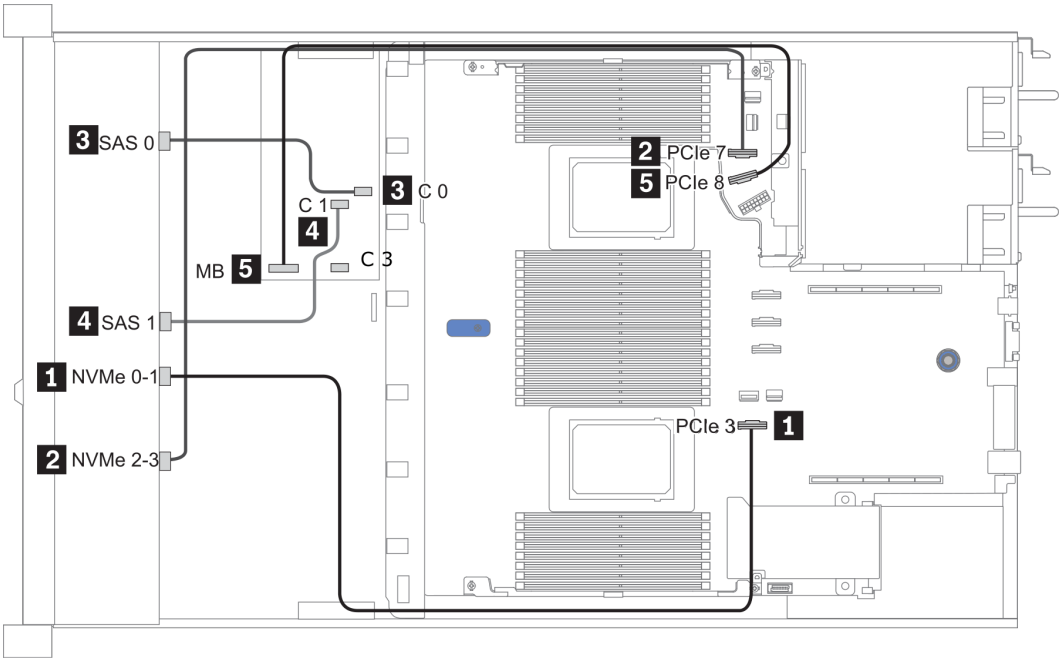

Figure 32. Cable routing for configuration 3

Chapter 4. Hardware replacement procedures

This section provides installation and removal procedures for all serviceable system components. Each component replacement procedure references any tasks that need to be performed to gain access to the component being replaced.

For more information about ordering parts:

https://datacentersupport.lenovo.com/products/servers/thinksystem/sr645/7d2x/parts

Note: If you replace a part, such as an adapter, that contains firmware, you might also need to update the firmware for that part. For more information about updating firmware, see Firmware updates.

Installation Guidelines

Before installing components in your server, read the installation guidelines.

Before installing optional devices, read the following notices carefully:

Attention: Prevent exposure to static electricity, which might lead to system halt and loss of data, by keeping static-sensitive components in their static-protective packages until installation, and handling these devices with an electrostatic-discharge wrist strap or other grounding system.

- Read the safety information and guidelines to ensure to ensure your safety at work: http://thinksystem.lenovofiles.com/help/topic/safety_documentation/pdf_files.html
- When you install a new server, download and apply the latest firmware. This will help ensure that any known issues are addressed, and that your server is ready to work with optimal performance. Go to ThinkSystem SR645 Drivers and Software to download firmware updates for your server.

  Important: Some cluster solutions require specific code levels or coordinated code updates. If the component is part of a cluster solution, verify that the latest level of code is supported for the cluster solution before you update the code.
- It is good practice to make sure that the server is working correctly before you install an optional component.
- Keep the working area clean, and place removed components on a flat and smooth surface that does not shake or tilt.
- Do not attempt to lift an object that might be too heavy for you. If you have to lift a heavy object, read the following precautions carefully:
  - Make sure that you can stand steadily without slipping.
  - Distribute the weight of the object equally between your feet.
  - Use a slow lifting force. Never move suddenly or twist when you lift a heavy object.
  - To avoid straining the muscles in your back, lift by standing or by pushing up with your leg muscles.
- Back up all important data before you make changes related to the disk drives.
- Have a small flat-blade screwdriver, a small Phillips screwdriver, and a T8 torx screwdriver available.
- To view the error LEDs on the system board and internal components, leave the power on.
- You do not have to turn off the server to remove or install hot-swap power supplies, hot-swap fans, or hot-plug USB devices. However, you must turn off the server before you perform any steps that involve removing or installing adapter cables, and you must disconnect the power source from the server before you perform any steps that involve removing or installing a riser card.

© Copyright Lenovo 2020

- Blue on a component indicates touch points, where you can grip to remove a component from or install it in the server, open or close a latch, and so on.
- The Red strip on the drives, adjacent to the release latch, indicates that the drive can be hot-swapped if the server and operating system support hot-swap capability. This means that you can remove or install the drive while the server is still running.

  Note: See the system specific instructions for removing or installing a hot-swap drive for any additional procedures that you might need to perform before you remove or install the drive.
- After finishing working on the server, make sure you reinstall all safety shields, guards, labels, and ground wires.

System reliability guidelines

Review the system reliability guidelines to ensure proper system cooling and reliability.

Make sure the following requirements are met:

- When the server comes with redundant power, a power supply must be installed in each power-supply bay.
- Adequate space around the server must be spared to allow server cooling system to work properly. Leave approximately 50 mm (2.0 in.) of open space around the front and rear of the server. Do not place any object in front of the fans.
- For proper cooling and airflow, refit the server cover before you turn the power on. Do not operate the server for more than 30 minutes with the server cover removed, for it might damage server components.
- Cabling instructions that come with optional components must be followed.
- A failed fan must be replaced within 48 hours after malfunction.
- A removed hot-swap fan must be replaced within 30 seconds after removal.
- A removed hot-swap drive must be replaced within two minutes after removal.
- A removed hot-swap power supply must be replaced within two minutes after removal.
- Every air baffle that comes with the server must be installed when the server starts (some servers might come with more than one air baffle). Operating the server with a missing air baffle might damage the processor.
- All processor sockets must contain either a socket cover or a processor with heat sink.
- When more than one processor is installed, fan population rules for each server must be strictly followed.

Working inside the server with the power on

You might need to keep the power on with the server cover removed to look at system information on the display panel or to replace hot-swap components. Review these guidelines before doing so.

Attention: The server might stop and data loss might occur when internal server components are exposed to static electricity. To avoid this potential problem, always use an electrostatic-discharge wrist strap or other grounding systems when working inside the server with the power on.

- Avoid loose-fitting clothing, particularly around your forearms. Button or roll up long sleeves before working inside the server.
- Prevent your necktie, scarf, badge rope, or hair from dangling into the server.
- Remove jewelry, such as bracelets, necklaces, rings, cuff links, and wrist watches.
- Remove items from your shirt pocket, such as pens and pencils, in case they fall into the server as you lean over it.
- Avoid dropping any metallic objects, such as paper clips, hairpins, and screws, into the server.

Handling static-sensitive devices

Review these guidelines before you handle static-sensitive devices to reduce the possibility of damage from electrostatic discharge.

Attention: Prevent exposure to static electricity, which might lead to system halt and loss of data, by keeping static-sensitive components in their static-protective packages until installation, and handling these devices with an electrostatic-discharge wrist strap or other grounding system.

- Limit your movement to prevent building up static electricity around you.
- Take additional care when handling devices during cold weather, for heating would reduce indoor humidity and increase static electricity.
- Always use an electrostatic-discharge wrist strap or other grounding system, particularly when working inside the server with the power on.
- While the device is still in its static-protective package, touch it to an unpainted metal surface on the outside of the server for at least two seconds. This drains static electricity from the package and from your body.
- Remove the device from the package and install it directly into the server without putting it down. If it is necessary to put the device down, put it back into the static-protective package. Never place the device on the server or on any metal surface.
- When handling a device, carefully hold it by the edges or the frame.
- Do not touch solder joints, pins, or exposed circuitry.
- Keep the device from others' reach to prevent possible damages.

Technical rules

Refer to the below technical rules and limitations when you install the related server components.

Technical rules for processors and heat sinks

Understanding the technical rules helps you choose the correct heat sinks, fans, and other components based on what processors are configured for your server.

Supported heat sinks for processors

The following lists the required heat sinks when different processors are installed.

Heat sink/fan	Processor TDP	
	120W-155W	180W-280W
Heat sink	Standard	Performance

Supported fans for processors

The following lists the required fans when different processors are installed.

Processor		Fan type				Fan quantity
		10 x 2.5'' models		4 x 2.5'', 4 x 3.5'', 8 x 2.5'' models		
		STD[1]	Perf.	STD	Perf.	
TDP	120W	√		√		
	155W		√	√		
	180W-280W		√		√	
Quantity	One					6[2]
	Two					8

1. Standard fans are enough for low-wattage processors while you can still use performance fans for better cooling.
2. Two fan dummies (fan cages 7 and 8) are required when one processor is installed.

Supported processors by server model

Server model	Processor				
	Group C	Group B	Group A	Group D[2]	Group Z
	120 W	155 W	180 W, 200 W	225 W, 240 W	280 W
4 x 2.5''					√[4]
4 x 3.5''	√	√	√	√[3]	
8 x 2.5''	√	√	√	√[3]	
10 x 2.5''	√	√	√[1]	√[3]	

1. For the server model, the 200W processors are supported only when:
   - No 2.5-inch rear drives are installed
2. Maximum GPU quantity supported:
   - When group C, group B, or group A processors are installed, the server supports up to 3 GPUs;
   - When group D processors are installed, the server supports up to 2 GPUs.
3. The type of processors are supported only when:
   - No 2.5-inch rear drives installed
   - No more than two GPUs installed (supported slots: 1, 3)
4. The type of processors are supported only when:
   - Performance fans are installed.
   - No 2.5-inch or 7mm rear drives are installed

Drive bay configurations and requirements

Understanding the drive bay configurations supported by the server helps you better and the requirements for hardware configurations.

Depending on models, the server supports:

- Up to ten 2.5-inch or four 3.5-inch SAS/SATA/NVMe front drives
- Up to two 2.5-inch SAS/SATA or two 7mm SAS/SATA rear drives
- Up to two M.2 SATA/NVMe drives

For a list of supported drives, see:
https://static.lenovo.com/us/en/serverproven/index.shtml

Drive bay combinations

The following table shows the supported drive bay combinations for the chassis with 3.5-inch/2.5-inch front drive bays.

Table 23. 2.5-inch drive bay combinations

No.	Total drives	Front bays			Rear bays	7mm drives	M.2 drives
		SAS/SATA	AnyBay	NVMe	SAS/SATA	SATA/NVMe	SATA/NVMe
1	4	4					Optional
2a	8	8				Optional	Optional

Table 23. 2.5-inch drive bay combinations (continued)

No.	Total drives	Front bays			Rear bays	7mm drives	M.2 drives
		SAS/SATA	AnyBay	NVMe	SAS/SATA	SATA/NVMe	SATA/NVMe
2b	10	8			2		Optional
3a	10		10			Optional	Optional
3b	12		10		2		Optional
3c	10			10		Optional	Optional
3d	12			10	2		Optional
3e	10		8	2			
3f	10	6	4			Optional	Optional
3g	12	6	4		2		Optional
3h	12	6		4	2		Optional
3i	10	6	2	2			Optional

Table 24. 3.5-inch drive bay combinations

No.	Total drives	Front bays		Rear bays		7mm drives	M.2 drives
		SAS/SATA	AnyBay	SAS/SATA	NVMe	SATA/NVMe	SATA/NVMe
1a	4	4				Optional	Optional
1b	6	4		2			Optional
1c	6	4			2		Optional
2a	4		4			Optional	Optional
2c	6			2			Optional
2d	6				2		Optional

Note: For models without any backplanes or drives, field upgrades to other models are available. For details, check the option part numbers you will need when ordering for different configurations:Field upgrades

Drive installation requirements

The following notes describe information that you must consider when you install a drive.

- The drive bays are numbered to indicate the installation order (starting from number “0”). Follow the installation order when you install a drive. See Front view.
- The drives in a single RAID array must be the same type, same size, and same capacity.
- You can mix drives of different types and different capacities in one system, but not in one RAID array. The following priorities are recommended:
  - Drive type priority: NVMe SSD, SAS SSD, SATA SSD, SAS HDD, SATA HDD
  - Drive capacity priority: the lowest capacity first
  - RAID arrays are not support for NVMe SSD drives.
  - RAID arrays are not support for AIC(all-in-card) SSD drives.
  - RAID arrays are not support for SED or FIPS HDD/SSD drives.

Note: FIPS (Federal Information Processing Standard) 140-2 is a U.S. government standard that describes the encryption and related security requirements for sensitive but unclassified (SBU) information technology (IT) products. FIPS 140-2 defines four levels of security, SEDs(Self-Encrypting Drives) are FIPS 140-2 Level 2 validated drives.

- When one or more SED drives are installed, the following internal SAS HBA adapters are not supported:
  - 430-8i
  - 430-16i
  - 440-16i

Technical rules for DIMMs

Memory modules must be installed in a specific sequence based on the memory configuration that you implement on your server. Understanding the technical rules for DIMMs helps you install the correct DIMMs in the correct sequence.

Your server has 8 channels, 32 memory slots, and supports:

- Minimum capacity:
  - 16 GB using RDIMMs
  - 128 GB using 3DS RDIMMs
- Maximum capacity:
  - 2 TB using RDIMMs
  - 4 TB using 3DS RDIMMs
- Type (depending on the model): TruDDR4 3200, dual-rank, 16 GB/32 GB/64 GB RDIMM
  For a list of supported memory options, see: https://static.lenovo.com/us/en/serverproven/index.shtml

Note: The operating speed and total memory capacity depend on the processor model and UEFI settings.

The following figure and table help you locate the memory slots and channels on the system board.

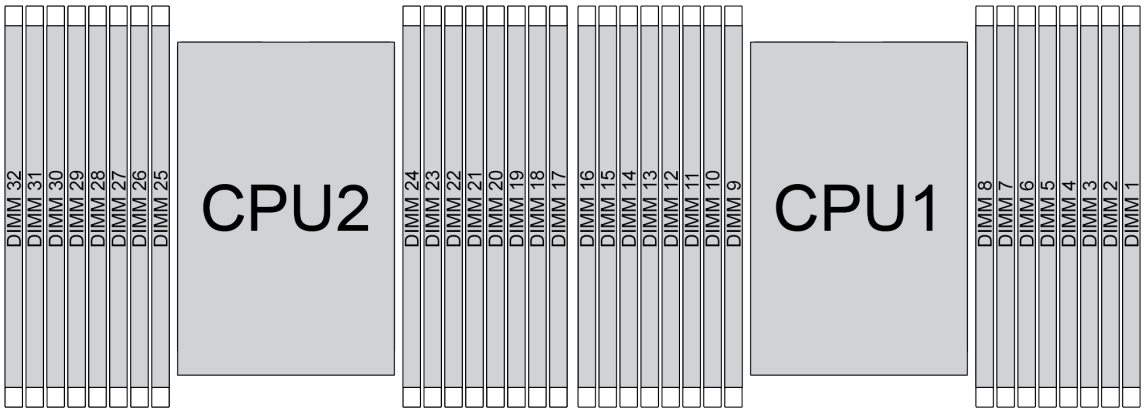

Figure 33. Memory module locations

Table 25. Memory slot and channel identification

Channel	D1	D0	C1	C0	B1	B0	A1	A0	E0	E1	F0	F1	G0	G1	H0	H1
Slot number	16	15	14	13	12	11	10	9	8	7	6	5	4	3	2	1
	32	31	30	29	28	27	26	25	24	23	22	21	20	19	18	17

Rules you need to follow when installing or replacing a DIMM.

- **Slot**:
  - When a **data bus daisy chain topology** is used: populate DIMMs **from farthest slot (slot 1) to closest slot (slot 0) to the processor** on a per-channel basis.
  - When a **data bus balanced tee route topology** is used: populate DIMMs **in either slot** on a per-channel basis.

  Table 26. DIMM installation sequence

Number of processor	Slot sequence
With one processor	14, 16, 3, 1, 10, 12, 7, 5, 13, 15, 4, 2, 9, 11, 8, 6
With two processors	14, 30, 16, 32, 3, 19, 1, 17, 10, 26, 12, 28, 7, 23, 5, 21, 13, 29, 15, 31, 4, 20, 2, 18, 9, 25, 11, 27, 8, 24, 6, 22

- **Capacity**:

  DIMMs with different capacities (only two different capacities) **can be mixed**, install the one with **the highest capacity first**.
- **Rank**:

  DIMMs with different ranks **can be mixed**, install the one with **the highest rank first**.
- **Frequency**:

  DIMMs with different frequencies **can be mixed** in the same channel.
- **Voltage**:

  DIMMs with different operating voltage **cannot be mixed**. (The only supported DIMM voltage is 1.2V.)
- **ECC/Non-ECC**:

  ECC and non-ECC DIMM **cannot be mixed**. (Non-ECC DIMM is not supported for the server.)
- **DRAM**:

  x4 and x8 DRAM based DIMMs **can be mixed**, but **not in the same channel**.
- **Type**:

  DIMMs of different base module types **can be mixed**, but **not in the same channel**.
- **Vendor**:

  DIMMs from different vendors **can be mixed** in the same channel.

Technical rules for PCIe adapters

Understanding

Type of PCIe adapters supported for different models

Server models	Supported types and slot location
Server models with three PCIe slots	**Riser 1 assembly** • Slot 1: PCIe x16 (x8, x4, x1), low-profile • Slot 2: PCIe x16 (x8, x4, x1), low-profile **Riser 2 assembly** • Slot 3: PCIe x16 (x8, x4, x1), low-profile
Server models with two PCIe slots	**Riser 1 assembly** • Slot 1: PCIe x16 (x8, x4, x1), low-profile • Slot 2: PCIe x16 (x8, x4, x1), full-height **Note:** One rearwall bracket must be installed next to the two PCIe slots.
Server models with two hot-swap 7mm drive bays and two PCIe slots	**Riser 1 assembly** • Slot 1: PCIe x16 (x8, x4, x1), low-profile • Slot 2: PCIe x16 (x8, x4, x1), low-profile
Server models with two hot-swap 2.5-inch drive bays and one PCIe slot	**Riser 1 assembly** • Slot 1: PCIe x16 (x8, x4, x1), low-profile

Rules you need to follow when installing or replacing a PCIe adapter.

- Slot priority for most PCIe adapters:
  - One processor installed: Slot 1, slot 2
  - Two processors installed: Slot 1, slot 3, slot 2
- Slot priority exceptions:
  - CFF RAID/HBA adapters are always installed on slot 5.
  - P2200 GPU is always installed on slot 2.
  - The following two Mellanox ConnectX-6 adapters are always installed on slot 1:
    - Mellanox ConnectX-6 HDR IB/200GbE Single Port x16 PCIe Adapter
    - Mellanox HDR Auxiliary x16 PCIe 3.0 Connection Card
- Gen 3 riser cards **only** support Gen 3 adapters.
- Gen 4 riser cards support **both** Gen 3 and Gen 4 adapters.
- Gen 3 and Gen 4 SFF RAID adapters are available on the following server models when **one** processor is installed.
  - Server models with 8 x 2.5-inch front drive bays (SAS/SATA)
  - Server models with 4 x 2.5-inch front drive bays (SAS/SATA)
  - Server models with 4 x 3.5-inch front drive bays (SAS/SATA)
- Gen 3 and Gen 4 internal SFF RAID adapters are available on the following server models when **two** processors are installed.
  - Server models with 10 x 2.5-inch front drive bays (6 SAS/SATA +4 AnyBay, 10 AnyBay, or 10 NVMe)
  - Server models with 4 x 3.5-inch front drive bays (AnyBay)
  - Server models with 2 x 2.5-inch rear drive bays (SAS/SATA)
- Gen 4 internal CFF RAID/HBA adapters are available on the following server models and when **two** processors are installed.
  - Server models with 8 x 2.5-inch front drive bays (SAS/SATA)
  - Server models with 10 x 2.5-inch front drive bays (6 SAS/SATA +4 AnyBay, 10 AnyBay, or 10 NVMe)
  - Server models with 4 x 3.5-inch front drive bays (AnyBay)
  - Server models with 2 x 2.5-inch rear drive bays (SAS/SATA)
- One super capacitor module is required for each 930/940 series internal RAID adapter. Locations and quantities of RAID super capacitors vary by models:

Table 27. Super capacitor installation rules

Server model	**Max. qty.**	**Installation priority**	**With standard heat sinks**	**With performance heat sinks**	**Cable**
Server models with 2.5'' chassis	3	Super cap 1---> 2---->3	– Super cap 1 on front chassis – Super cap 2 and 3 on front chassis	Super cap 1 on front chassis	– Long cable: not for CFF RAID/HBA – Short cable: for CFF RAID/HBA
Server models with 3.5'' chassis	2		Super cap 1 and 2 on front chassis	Super cap 1 in an low-profile riser cage	Long cable

Technical rules for GPU adapters

Understanding the technical rules helps you choose the correct GPUs and install them in the supported slots based on what is configured for your server.

The following are installation rules for installing GPUs for your server:

- Performance fan must be selected.
- PCIe SSD adapter is not supported.
- PCIe slot priority when one processor is installed:
  - Tesla T4, P620: Slot 1, slot 2
  - P2200: Slot 2
- PCIe slot priority when two processors are installed:
  - Tesla T4, P620: Slot 1, slot 3, slot 2
  - P2200: Slot 2
- Maximum quantity supported:

When processor TDP is...	Maximun. quantity supported
≤ 200W	3
≥225W	2 **Note:** Slot priority: slot 1, slot 3

Technical rules for system fans

Depending on models, the server supports:

- Standard fan (21000 RPM)
- Performance fan (24000 RPM)

The following lists the required fans when different processors are installed.

Server model	Processor TDP			
	120W	155W	180W-240W	280 W
4 x 2.5'', 4 x 3.5'', 8 x 2.5'' models	Standard	Standard	Performance	NA
10 x 2.5'' models	Standard	Performance	Performance	NA
backplane-less	NA	NA	NA	Performance

Notes:

- Standard fans are enough for low-wattage processors while you can still use performance fans for better cooling.
- If there is an OCP 3.0 Ethernet adapter installed, when the system is powered off but still plugged in to AC power, fans 5 and fan 6 will continue to spin at a much lower speed. This is the system design to provide proper cooling for the OCP 3.0 Ethernet adapter.

Environmental restrictions

Use this topic to understand the environmental restrictions for different server models.

Server model	Ambient temperature restrictions
All models	**Mellanox CX6 adapter** • With all-optical communication (AOC) module: All models support Mellanox CX6 adapters under an ambient temperature of no more than 30°(86°F). • Without AOC module: All models support Mellanox CX6 adapters under an ambient temperature of no more than 35°(95°F). **GPU adapters**: All models support up to three P620/P2200 GPUs under an ambient temperature of no more than 35°(95°F). **OCP 3.0 adapter** All models support an OCP 3.0 adapters under an ambient temperature of no more than 35°(95°F). **2.5'' rear drives**: When 120W or 155W processors are installed, all models support 2.5'' rear drives under an ambient tempera (95°F) . **7mm rear drives**: All models support 7mm rear drives under an ambient temperature of no more than 35°(95°F).
8 x 2.5'' and 4 x 3.5'' models	**GPU adapters**: • When 120W, 155W, 180W, or 200W processors are installed, the models support up to three Tesla T4 GP temperature of no more than 35°(95°F). • When 225W or 240W processors are installed, the models support up to two Tesla T4 GPUs under an am more than 35°(95°F). **2.5'' rear drives**: When 180W or 200W processors are installed, the models support 2.5'' rear drives up to an ambient tempera
10 x 2.5'' models	**GPU adapters**: • When 120W or 155W processors are installed, the models support up to three Tesla T4 GPUs under an ar more than 30°(86°F). • When 180W or 200W processors are installed, the models support up to three Tesla T4 GPUs under an ar more than 35°(95°F). • When 225W or 240W processors are installed, the models support up to two Tesla T4 GPUs under an am more than 35°(95°F).
4 x 2.5'' models	**GPU adapters**: The only supported processors are 280W processors. The models support up to three Tesla T4 GPUs under of no more than 35°(95°F).

Air baffle replacement

Use this information to remove and install the air baffle.

Note: Air baffle is unavailable when performance heat sink is installed.

Remove the air baffle

Use this information to remove the air baffle.

About this task

Depending on the model, your server might not have an air baffle installed. The air baffle you want to remove might be different from the following illustrations, but the removal method is the same.

S033

CAUTION:
Hazardous energy present. Voltages with hazardous energy might cause heating when shorted with metal, which might result in spattered metal, burns, or both.

S017

CAUTION:
Hazardous moving fan blades nearby.

Attention:

- Read Installation Guidelines to ensure that you work safely.
- Power off the server and disconnect all power cords for this task.

A video for this task is available at:

- Youtube: https://www.youtube.com/playlist?list=PLYV5R7hVcs-DY1RaWHYM4xDloAwuBQHR0
- Youku: http://list.youku.com/albumlist/show/id_52339628

Procedure

Step 1. Remove the top cover. See Remove the top cover.

Step 2. If there is a RAID super capacitor module installed on the bottom of the air baffle, disconnect the RAID super capacitor module cable first.

Step 3. Grasp the air baffle and carefully lift it out of the server.

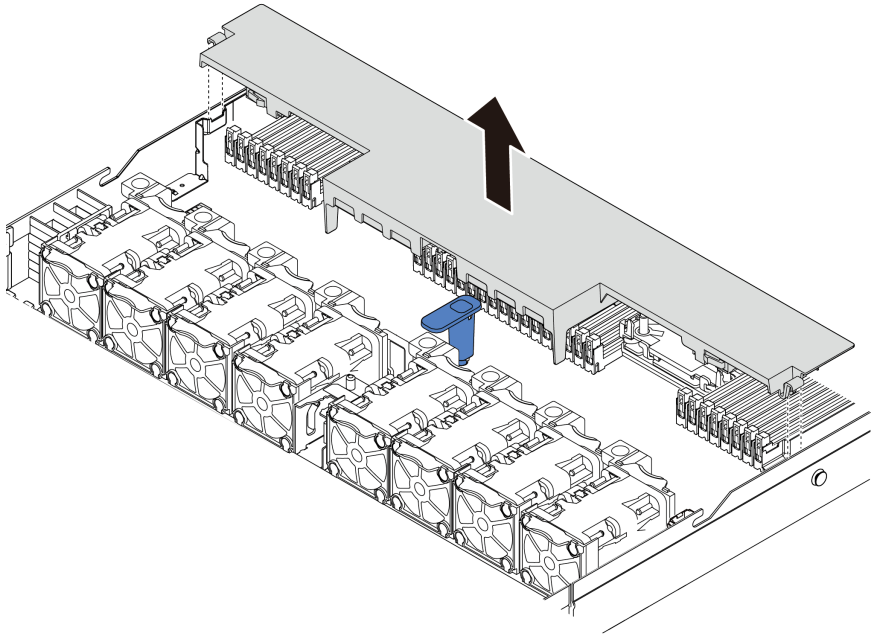

Figure 34. Air baffle removal

Attention: Operating the server with the air baffle removed might damage server components. For proper cooling and airflow, install the air baffle before you power on the server.

After you finish

If you would like to reuse the RAID super capacitor module installed on the bottom of the air baffle, remove it from the air baffle. See Remove the RAID super capacitor module on the air baffle.

Install the air baffle

Use this information to install the air baffle.

About this task

Depending on the model, your server might not have an air baffle installed. The air baffle you want to install might be different from the following illustrations, but the removal method is the same.

S033

CAUTION:
Hazardous energy present. Voltages with hazardous energy might cause heating when shorted with metal, which might result in spattered metal, burns, or both.

S017

CAUTION:
Hazardous moving fan blades nearby.

Attention:

- Read Installation Guidelines to ensure that you work safely.
- Power off the server and disconnect all power cords for this task.

A video for this task is available at:

- Youtube: https://www.youtube.com/playlist?list=PLYV5R7hVcs-DY1RaWHYM4xDloAwuBQHR0
- Youku: http://list.youku.com/albumlist/show/id_52339628

Procedure

Step 1. If you need to install a RAID super capacitor module on the bottom of the air baffle, install it first. See Install the RAID super capacitor module on the air baffle.

Step 2. Align the direction of the air baffle according to indications on it.

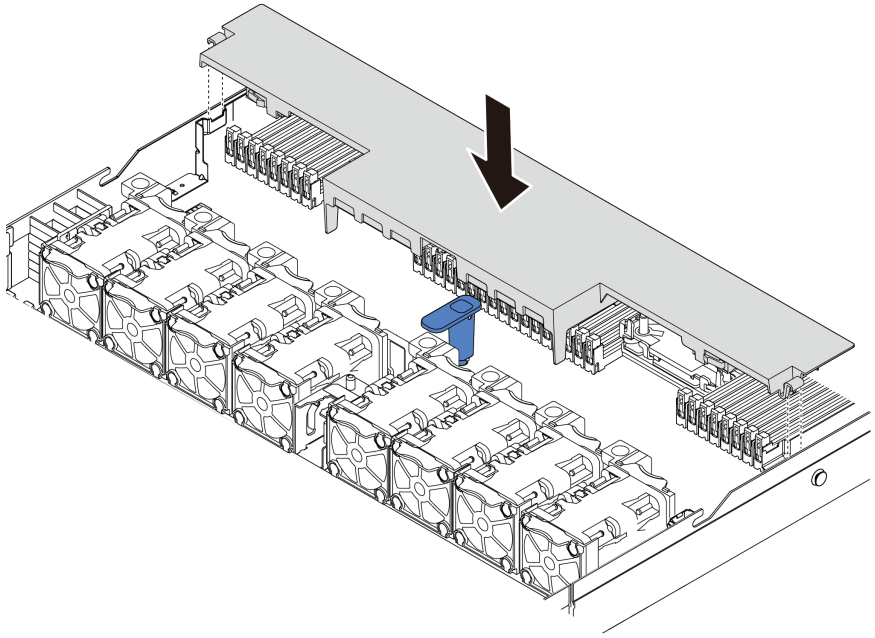

Figure 35. Air baffle installation

Step 3. Lower the air baffle into the chassis and press the air baffle down until it is securely seated.

After you finish

1. If there is a RAID super capacitor module installed on the bottom of the air baffle, connect it to the RAID adapter with the extension cable that comes with the RAID super capacitor module.
2. Complete the parts replacement. See Complete the parts replacement.

CMOS battery replacement

Use this information to remove and install the CMOS battery.

Remove the CMOS battery

Use this information to remove the CMOS battery.

About this task

The following tips describe information that you must consider when removing the CMOS battery.

- Lenovo has designed this product with your safety in mind. The lithium CMOS battery must be handled correctly to avoid possible danger. If you replace the CMOS battery, you must adhere to the following instructions.
- If you replace the original lithium battery with a heavy-metal battery or a battery with heavy-metal components, be aware of the following environmental consideration. Batteries and accumulators that contain heavy metals must not be disposed of with normal domestic waste. They will be taken back free of charge by the manufacturer, distributor, or representative, to be recycled or disposed of in a proper manner.
- To order replacement batteries, call 1-800-IBM-SERV within the U.S., and 1-800-465-7999 or 1-800-465-6666 within Canada. Outside the U.S. and Canada, call your support center or business partner.

  Note: After you replace the CMOS battery, you must reconfigure the server and reset the system date and time.

S004

CAUTION:
When replacing the lithium battery, use only Lenovo specified part number or an equivalent type battery recommended by the manufacturer. If your system has a module containing a lithium battery, replace it only with the same module type made by the same manufacturer. The battery contains lithium and can explode if not properly used, handled, or disposed of. *Do not:*

- **Throw or immerse into water**
- **Heat to more than 100°C (212°F)**
- **Repair or disassemble**

Dispose of the battery as required by local ordinances or regulations.

S002

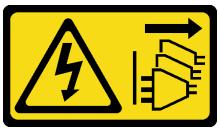

CAUTION:
The power-control button on the device and the power switch on the power supply do not turn off the electrical current supplied to the device. The device also might have more than one power cord. To remove all electrical current from the device, ensure that all power cords are disconnected from the power source.

Attention:

- Read Installation Guidelines to ensure that you work safely.
- Power off the server and disconnect all power cords for this task.
- Prevent exposure to static electricity, which might lead to system halt and loss of data, by keeping static-sensitive components in their static-protective packages until installation, and handling these devices with an electrostatic-discharge wrist strap or other grounding system.

A video for this task is available at:

- Youtube: https://www.youtube.com/playlist?list=PLYV5R7hVcs-DY1RaWHYM4xDloAwuBQHR0
- Youku: http://list.youku.com/albumlist/show/id_52339628

Procedure

Step 1. Remove the top cover. See Remove the top cover.

Step 2. Remove any parts and disconnect any cables that might impede your access to the CMOS battery.

Step 3. Locate the CMOS battery. See System board components.

Step 4. Open the battery clip as shown and carefully take the CMOS battery out of the socket.

Attention:

- Failing to remove the CMOS battery properly might damage the socket on the system board. Any damage to the socket might require replacing the system board.
- Do not tilt or push the CMOS battery by using excessive force.

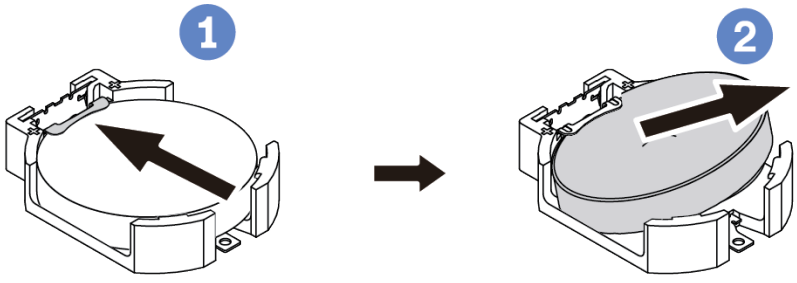

Figure 36. CMOS battery removal

After you finish

1. Install a new one. See Install the CMOS battery.

2. Dispose of the CMOS battery as required by local ordinances or regulations.

Install the CMOS battery

Use this information to install the CMOS battery.

About this task

The following tips describe information that you must consider when installing the CMOS battery.

- Lenovo has designed this product with your safety in mind. The lithium battery must be handled correctly to avoid possible danger. If you install the CMOS battery, you must adhere to the following instructions.

  Note: In the U.S., call 1-800-IBM-4333 for information about battery disposal.
- If you replace the original lithium battery with a heavy-metal battery or a battery with heavy-metal components, be aware of the following environmental consideration. Batteries and accumulators that contain heavy metals must not be disposed of with normal domestic waste. They will be taken back free of charge by the manufacturer, distributor, or representative, to be recycled or disposed of in a proper manner.
- To order replacement batteries, call 1-800-IBM-SERV within the U.S., and 1-800-465-7999 or 1-800-465-6666 within Canada. Outside the U.S. and Canada, call your support center or business partner.

  Note: After you install the CMOS battery, you must reconfigure the server and reset the system date and time.

S004

CAUTION:
When replacing the lithium battery, use only Lenovo specified part number or an equivalent type battery recommended by the manufacturer. If your system has a module containing a lithium battery, replace it only with the same module type made by the same manufacturer. The battery contains lithium and can explode if not properly used, handled, or disposed of. *Do not:*

- **Throw or immerse into water**
- **Heat to more than 100°C (212°F)**
- **Repair or disassemble**

Dispose of the battery as required by local ordinances or regulations.

S002

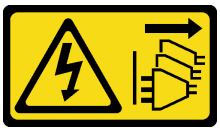

CAUTION:
The power-control button on the device and the power switch on the power supply do not turn off the electrical current supplied to the device. The device also might have more than one power cord. To remove all electrical current from the device, ensure that all power cords are disconnected from the power source.

Attention:

- Read Installation Guidelines to ensure that you work safely.
- Power off the server and disconnect all power cords for this task.
- Prevent exposure to static electricity, which might lead to system halt and loss of data, by keeping static-sensitive components in their static-protective packages until installation, and handling these devices with an electrostatic-discharge wrist strap or other grounding system.

A video for this task is available at:

- Youtube: https://www.youtube.com/playlist?list=PLYV5R7hVcs-DY1RaWHYM4xDloAwuBQHR0
- Youku: http://list.youku.com/albumlist/show/id_52339628

Procedure

Step 1. Touch the static-protective package that contains the CMOS battery to any unpainted surface on the outside of the server. Then, take the CMOS battery out of the package.

Step 2. Install the CMOS battery. Ensure that the CMOS battery is seated in place.

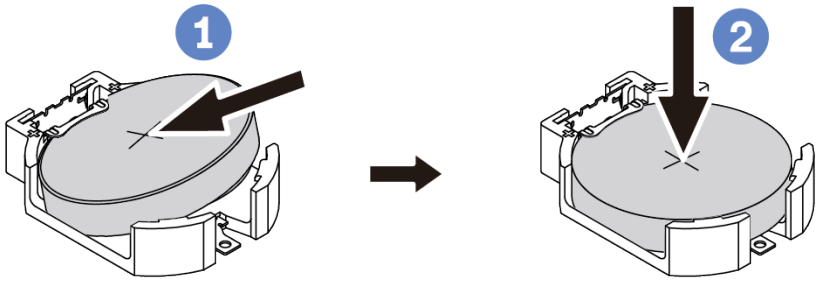

Figure 37. CMOS battery installation

After you finish

1. Complete the parts replacement. See Complete the parts replacement.
2. Use the Setup utility to set the date, time, and any passwords.

Front I/O assembly replacement

Use this information to remove and install the front I/O assembly.

Depending on server models, your server supports the following front I/O assemblies.

Type	Front I/O assembly
For server models with • four 2.5-inch front drive bays • ten 2.5-inch front drive bays • eight 2.5-inch front drive bays (1)	Front I/O assembly with diagnostics panel (right) 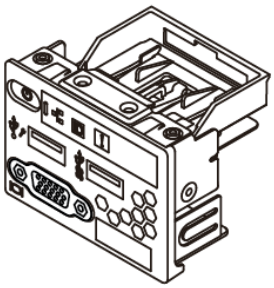
For server models with four 3.5-inch front drive bays.	Front I/O assembly with diagnostics panel (top) 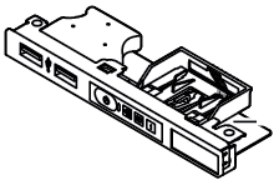
For server models with eight 2.5-inch front drive bays (2)	Front I/O assembly+ LCD diagnostics panel assembly 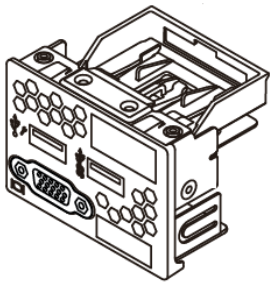 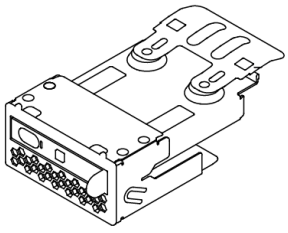

Remove the front I/O assembly

Use this information to remove the front I/O assembly.

About this task

The following illustrates how to remove the front I/O assembly with diagnostics panel. You can remove other front I/O assemblies in the same way.

Attention:

- Read Installation Guidelines to ensure that you work safely.
- Power off the server and disconnect all power cords for this task.
- Prevent exposure to static electricity, which might lead to system halt and loss of data, by keeping static-sensitive components in their static-protective packages until installation, and handling these devices with an electrostatic-discharge wrist strap or other grounding system.

A video for this task is available at:

- Youtube: https://www.youtube.com/playlist?list=PLYV5R7hVcs-DY1RaWHYM4xDloAwuBQHR0
- Youku: http://list.youku.com/albumlist/show/id_52339628

Procedure

Step 1. Remove the top cover. See Remove the top cover.

Step 2. If the security bezel is installed, remove it. See Remove the security bezel.

Step 3. Disconnect the front I/O cables from the system board.

Step 4. Remove the front I/O assembly.

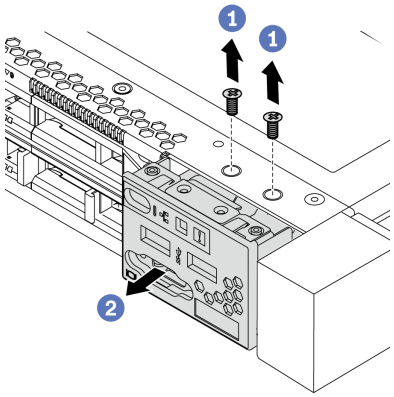

Figure 38. Removal of the front I/O assembly

a. Remove the screws that secure the front I/O assembly.

b. Slide the front I/O assembly out of the front chassis.

After you finish

If you are instructed to return the old front I/O assembly, follow all packaging instructions and use any packaging materials that are provided.

Install the front I/O assembly

Use this information to install the front I/O assembly.

About this task

The following illustrates how to install the front I/O assembly with diagnostics panel. You can install other front I/O assemblies in the same way.

Attention:

- Read Installation Guidelines to ensure that you work safely.
- Power off the server and disconnect all power cords for this task.
- Prevent exposure to static electricity, which might lead to system halt and loss of data, by keeping static-sensitive components in their static-protective packages until installation, and handling these devices with an electrostatic-discharge wrist strap or other grounding system.

A video for this task is available at:

- Youtube: https://www.youtube.com/playlist?list=PLYV5R7hVcs-DY1RaWHYM4xDloAwuBQHR0
- Youku: http://list.youku.com/albumlist/show/id_52339628

Procedure

Step 1. Touch the static-protective package that contains the front I/O assembly to any unpainted surface on the outside of the server. Then, take the front I/O assembly out of the package and place it on a static-protective surface.

Step 2. Install the front I/O assembly.

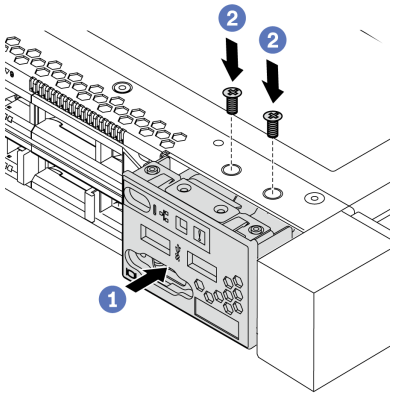

Figure 39. Installation of the front I/O assembly

a. Insert the front I/O assembly into the front chassis.

b. Install the screws to secure the front I/O assembly in place.

After you finish

1. Connect the front I/O cables to the system board. For detailed cable routing information, see Internal cable routing.
2. Complete the parts replacement. See Complete the parts replacement.

Remove the LCD diagnostics panel assembly

Use this information to remove the LCD diagnostics panel assembly.

About this task

Attention:

- Read Installation Guidelines to ensure that you work safely.
- Power off the server and disconnect all power cords for this task.
- Prevent exposure to static electricity, which might lead to system halt and loss of data, by keeping static-sensitive components in their static-protective packages until installation, and handling these devices with an electrostatic-discharge wrist strap or other grounding system.

A video for this task is available at:

- Youtube: https://www.youtube.com/playlist?list=PLYV5R7hVcs-DY1RaWHYM4xDloAwuBQHR0
- Youku: http://list.youku.com/albumlist/show/id_52339628

Procedure

Step 1. Remove the top cover. See Remove the top cover.

Step 2. If the security bezel is installed, remove it. See Remove the security bezel.

Step 3. Remove the LCD diagnostics panel assembly.

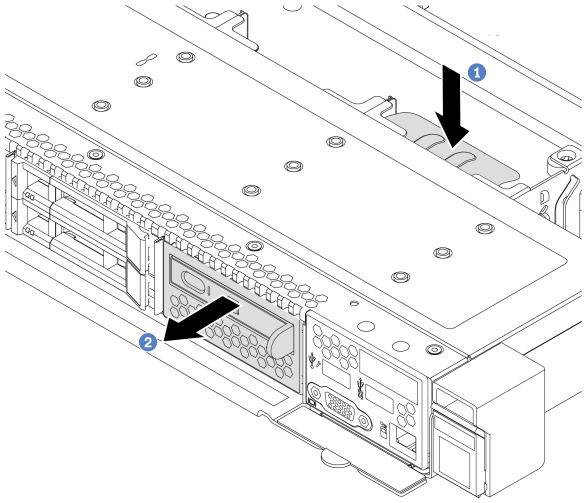

Figure 40. LCD diagnostics panel assembly removal

a. Press down the extended tab on the other side of the front chassis.

b. Slide the assembly out of the front chassis.

After you finish

1. Install a new LCD diagnostics panel assembly or filler. See Install the LCD diagnostics panel assembly.
2. If you are instructed to return the old LCD diagnostics panel assembly, follow all packaging instructions and use any packaging materials that are provided.

Install the LCD diagnostics panel assembly

Use this information to install the diagnostics panel assembly.

About this task

Attention:

- Read Installation Guidelines to ensure that you work safely.
- Power off the server and disconnect all power cords for this task.
- Prevent exposure to static electricity, which might lead to system halt and loss of data, by keeping static-sensitive components in their static-protective packages until installation, and handling these devices with an electrostatic-discharge wrist strap or other grounding system.

A video for this task is available at:

- Youtube: https://www.youtube.com/playlist?list=PLYV5R7hVcs-DY1RaWHYM4xDloAwuBQHR0
- Youku: http://list.youku.com/albumlist/show/id_52339628

Procedure

Step 1. Touch the static-protective package that contains the diagnostics panel assembly to any unpainted surface on the outside of the server. Then, take the assembly out of the package and place it on a static-protective surface.

Step 2. If there is a filler installed on the front chassis, remove it.

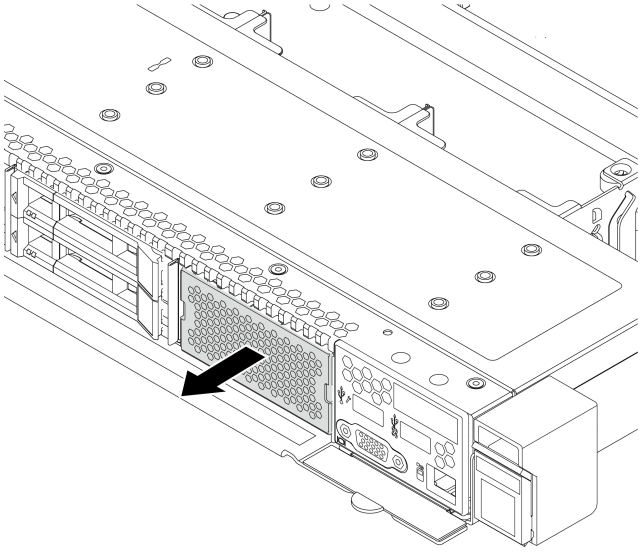

Figure 41. Filler removal

Step 3. Slide the diagnostics panel assembly into the front chassis as shown. Ensure that it is seated in place.

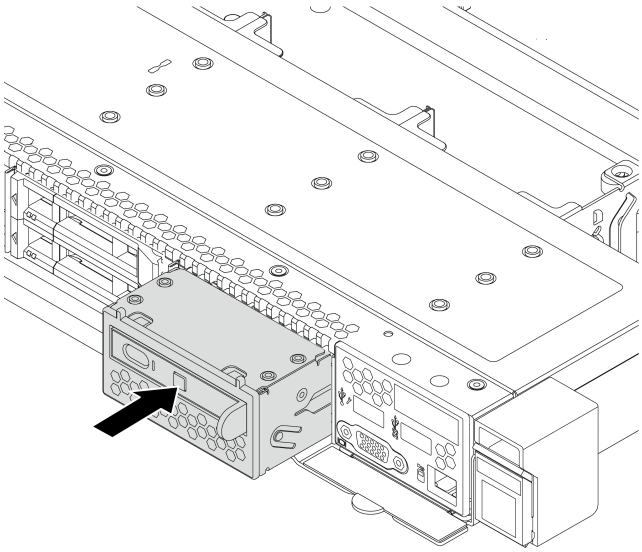

Figure 42. Diagnostics panel assembly installation

After you finish

Complete the parts replacement. See Complete the parts replacement.

Hot-swap drive replacement

Use this information to remove and install a hot-swap drive. You can remove or install a hot-swap drive without turning off the server, which helps you avoid significant interruption to the operation of the system.

Notes:

- The term “hot-swap drive” refers to all the supported types of hot-swap hard disk drives, hot-swap solid-state drives, and hot-swap NVMe drives.
- Use any documentation that comes with the drive and follow those instructions in addition to the instructions in this topic.
- The electromagnetic interference (EMI) integrity and cooling of the server are protected by having all drive bays covered or occupied. The vacant bays are either covered by an EMI-protective panel or occupied by drive fillers. When installing a drive, save the removed drive filler in case that you later remove the drive and need the drive filler to cover the place.
- To avoid damage to the drive connectors, ensure that the top cover is in place and fully closed whenever you install or remove a drive.

Remove a hot-swap drive

Use this information to remove a hot-swap drive.

About this task

The following describes the information that you must consider for this task:

- Ensure that you have backed up data on your drive, especially if it is part of a RAID array.
  - Before you make changes to drives, RAID adapters, or drive backplanes, back up all important data that is stored on the drives.
  - Before you remove any component of a RAID array, back up all RAID configuration information.
- If one or more NVMe drives are to be removed, it is recommended to disable them first in Safely Remove Hardware and Eject Media (Windows) or filesystem (Linux). Log in to XClarity Controller and go to the **Storage** menu to identify and locate the drive type and corresponding drive bay number. If the drive bay numbers come with the term “NVMe”, it indicates the installed drives are NVMe drives.

Attention:

- Read Installation Guidelines to ensure that you work safely.
- Prevent exposure to static electricity, which might lead to system halt and loss of data, by keeping static-sensitive components in their static-protective packages until installation, and handling these devices with an electrostatic-discharge wrist strap or other grounding system.
- To ensure that there is adequate system cooling, do not operate the server for more than two minutes without either a drive or a drive filler installed in each bay.

A video for this task is available at:

- Youtube: https://www.youtube.com/playlist?list=PLYV5R7hVcs-DY1RaWHYM4xDloAwuBQHR0
- Youku: http://list.youku.com/albumlist/show/id_52339628

Procedure

Step 1. If the security bezel is installed, remove it first. See Remove the security bezel.

Step 2. Slide the release latch to the left to open the drive tray handle.

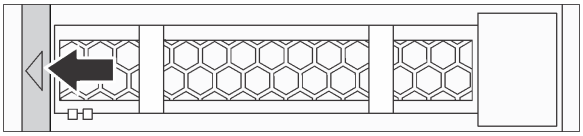

Figure 43. Opening the drive tray handle

Step 3. Grasp the handle and slide the drive out of the drive bay.

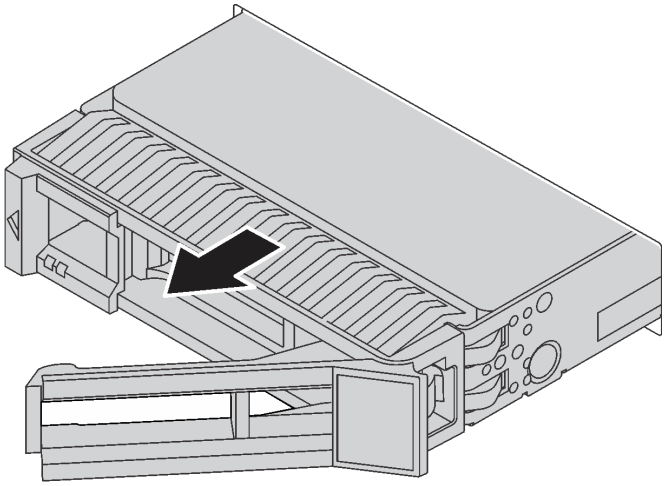

Figure 44. Hot-swap drive removal

After you finish

1. Install the drive filler or a new drive to cover the drive bay. See Install a hot-swap drive.
2. If you are instructed to return the old hot-swap drive, follow all packaging instructions and use any packaging materials that are provided.

Install a hot-swap drive

Use this information to install a hot-swap drive.

About this task

Attention:

- Read Installation Guidelines to ensure that you work safely.
- Prevent exposure to static electricity, which might lead to system halt and loss of data, by keeping static-sensitive components in their static-protective packages until installation, and handling these devices with an electrostatic-discharge wrist strap or other grounding system.

A video for this task is available at:

- Youtube: https://www.youtube.com/playlist?list=PLYV5R7hVcs-DY1RaWHYM4xDloAwuBQHR0
- Youku: http://list.youku.com/albumlist/show/id_52339628

Procedure

Step 1. Touch the static-protective package that contains the drive to any unpainted surface on the outside of the server. Then, take the drive out of the package and place it on a static-protective surface.

Note: Ensure that drive installation meets Drive bay configurations and requirements.

Step 2. Remove the drive filler from the drive bay and keep the drive filler in a safe place.

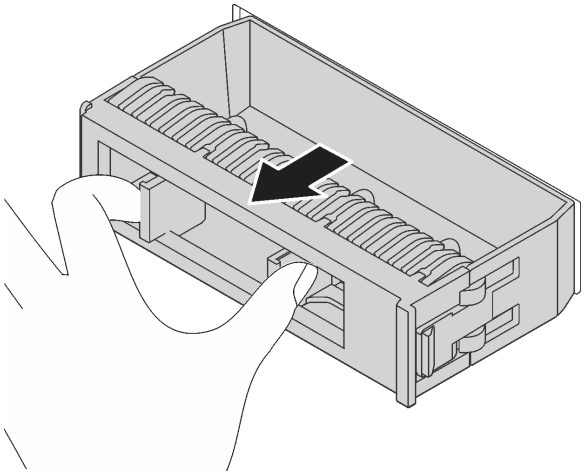

Figure 45. Drive filler removal

Step 3. Install the drive in the drive bay.

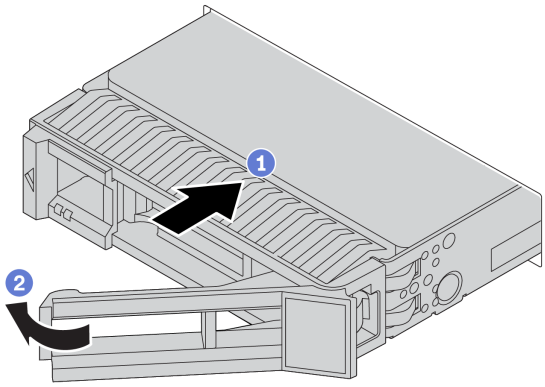

Figure 46. Hot-swap drive installation

a. Ensure that the drive tray handle is in the open position. Slide the drive into the drive bay until it snaps into position.

b. Close the drive tray handle to lock the drive in place.

Step 4. Check the drive LEDs to verify that the drive is operating correctly. For details, see Drive LEDs.

Step 5. Continue to install additional hot-swap drives if necessary.

After you finish

1. Reinstall the security bezel if you have removed it. See Install the security bezel.
2. Use the Lenovo XClarity Provisioning Manager V3 to configure the RAID if necessary. For more information, see:
   https://sysmgt.lenovofiles.com/help/topic/LXPMv3/LXPMv3_introduction.html

Backplane replacement

Use this information to remove and install a backplane.

Remove the front 2.5-inch-drive backplane

Use this information to remove the backplane for eight or ten 2.5-inch hot-swap drives.

About this task

The following describes how to remove the backplane for ten 2.5-inch hot-swap drives. You can remove the backplane for eight 2.5-inch hot-swap drives in the same way.

Attention:

- Read Installation Guidelines to ensure that you work safely.
- Power off the server and disconnect all power cords for this task.
- Prevent exposure to static electricity, which might lead to system halt and loss of data, by keeping static-sensitive components in their static-protective packages until installation, and handling these devices with an electrostatic-discharge wrist strap or other grounding system.

A video for this task is available at:

- Youtube: https://www.youtube.com/playlist?list=PLYV5R7hVcs-DY1RaWHYM4xDloAwuBQHR0
- Youku: http://list.youku.com/albumlist/show/id_52339628

Procedure

Step 1. Remove the top cover. See Remove the top cover.

Step 2. Remove all the installed drives and drive fillers from the drive bays. See Remove a hot-swap drive.

Step 3. Grasp the backplane and carefully lift it out of the chassis.

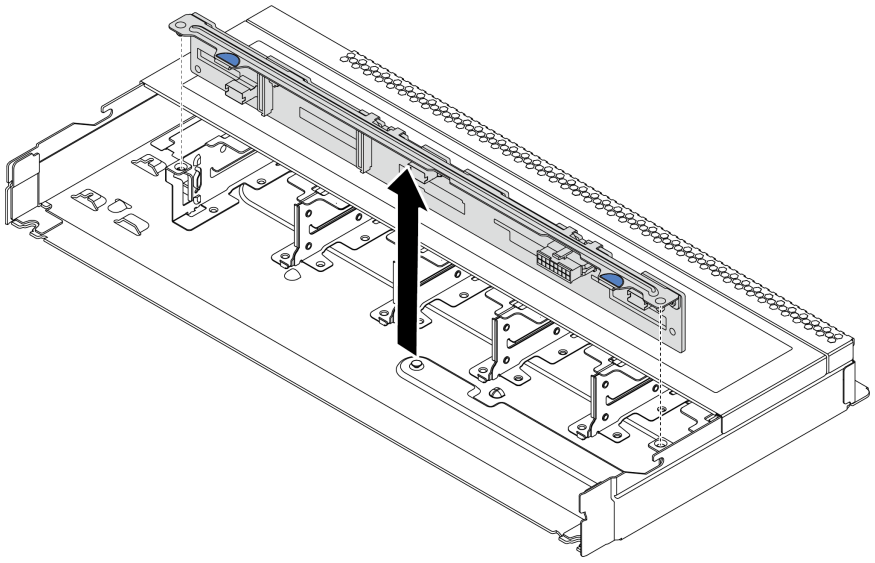

Figure 47. Removal of backplane for ten 2.5-inch hot-swap drives

Step 4. Disconnect the cables from the backplane. See 2.5-inch/3.5-inch drive backplane (power) and 2.5-inch/3.5-inch drive backplane (signal).

After you finish

If you are instructed to return the old backplane, follow all packaging instructions and use any packaging materials that are provided.

Install the front 2.5-inch-drive backplane

Use this information to install the backplane for eight or ten 2.5-inch hot-swap drives.

About this task

The following describes how to install the backplane for ten 2.5-inch hot-swap drives. You can install the backplane for eight 2.5-inch hot-swap drives in the same way.

Attention:

- Read Installation Guidelines to ensure that you work safely.
- Power off the server and disconnect all power cords for this task.
- Prevent exposure to static electricity, which might lead to system halt and loss of data, by keeping static-sensitive components in their static-protective packages until installation, and handling these devices with an electrostatic-discharge wrist strap or other grounding system.

A video for this task is available at:

- Youtube: https://www.youtube.com/playlist?list=PLYV5R7hVcs-DY1RaWHYM4xDloAwuBQHR0
- Youku: http://list.youku.com/albumlist/show/id_52339628

Procedure

Step 1. Touch the static-protective package that contains the backplane to any unpainted surface on the outside of the server. Then, take the backplane out of the package and place it on a static-protective surface.

Step 2. Connect the cables to the backplane. See 2.5-inch/3.5-inch drive backplane (power) and 2.5-inch/3.5-inch drive backplane (signal).

Step 3. Align the two pins on the backplane with the corresponding holes in the chassis.

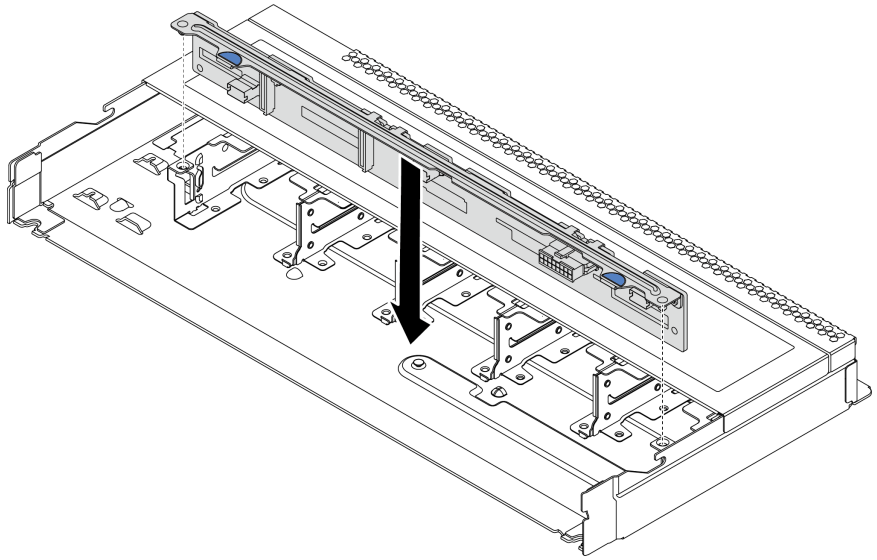

Figure 48. Installation of backplane for ten 2.5-inch hot-swap drives

Step 4. Lower the backplane into the chassis. Ensure that the pins pass through the holes and the backplane is fully seated in place.

After you finish

1. Reinstall all the drives and drive fillers into the drive bays. See Install a hot-swap drive.
2. Complete the parts replacement. See Complete the parts replacement.

Remove the front 3.5-inch-drive backplane

Use this information to remove the front 3.5-inch-drive backplane.

About this task

Attention:

- Read Installation Guidelines to ensure that you work safely.
- Power off the server and disconnect all power cords for this task.
- Prevent exposure to static electricity, which might lead to system halt and loss of data, by keeping static-sensitive components in their static-protective packages until installation, and handling these devices with an electrostatic-discharge wrist strap or other grounding system.

A video for this task is available at:

- Youtube: https://www.youtube.com/playlist?list=PLYV5R7hVcs-DY1RaWHYM4xDloAwuBQHR0
- Youku: http://list.youku.com/albumlist/show/id_52339628

Procedure

Note: Depending on the specific type, your backplane might look different from the illustration in this topic.

Step 1. Prepare your server.

a. Remove the top cover. See Remove the top cover.

b. Remove the system fan cage for easier operation. See Remove a system fan.

c. Remove all the installed drives and fillers (if any) from the drive bays. See Remove a hot-swap drive.

Step 2. Remove the backplane from the chassis.

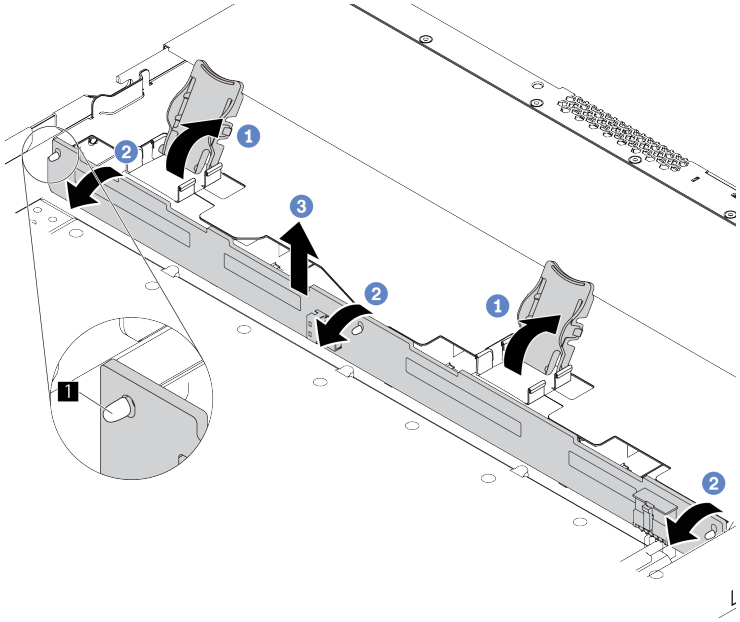

Figure 49. 3.5-inch-drive backplane removal

a. Open the release latches that secure the backplane.
b. Rotate the backplane backward slightly to release it from the two pins on the front drive cage.
c. Slightly lift the backplane up.

Step 3. Record the cable connections on the backplane and then disconnect all cables from the backplane. See 2.5-inch/3.5-inch drive backplane (power) and 2.5-inch/3.5-inch drive backplane (signal).

After you finish

If you are instructed to return the old backplane, follow all packaging instructions and use any packaging materials that are provided.

Install the front 3.5-inch-drive backplane

Use this information to install the backplane for eight or ten 2.5-inch hot-swap drives.

About this task

The following describes how to install the backplane for four 3.5-inch hot-swap drives.

Attention:

- Read Installation Guidelines to ensure that you work safely.
- Power off the server and disconnect all power cords for this task.
- Prevent exposure to static electricity, which might lead to system halt and loss of data, by keeping static-sensitive components in their static-protective packages until installation, and handling these devices with an electrostatic-discharge wrist strap or other grounding system.

A video for this task is available at:

- Youtube: https://www.youtube.com/playlist?list=PLYV5R7hVcs-DY1RaWHYM4xDloAwuBQHR0
- Youku: http://list.youku.com/albumlist/show/id_52339628

Procedure

Step 1. Touch the static-protective package that contains the backplane to any unpainted surface on the outside of the server. Then, take the backplane out of the package and place it on a static-protective surface.

Step 2. Connect the cables to the backplane.

Step 3. Put the backplane down into place.

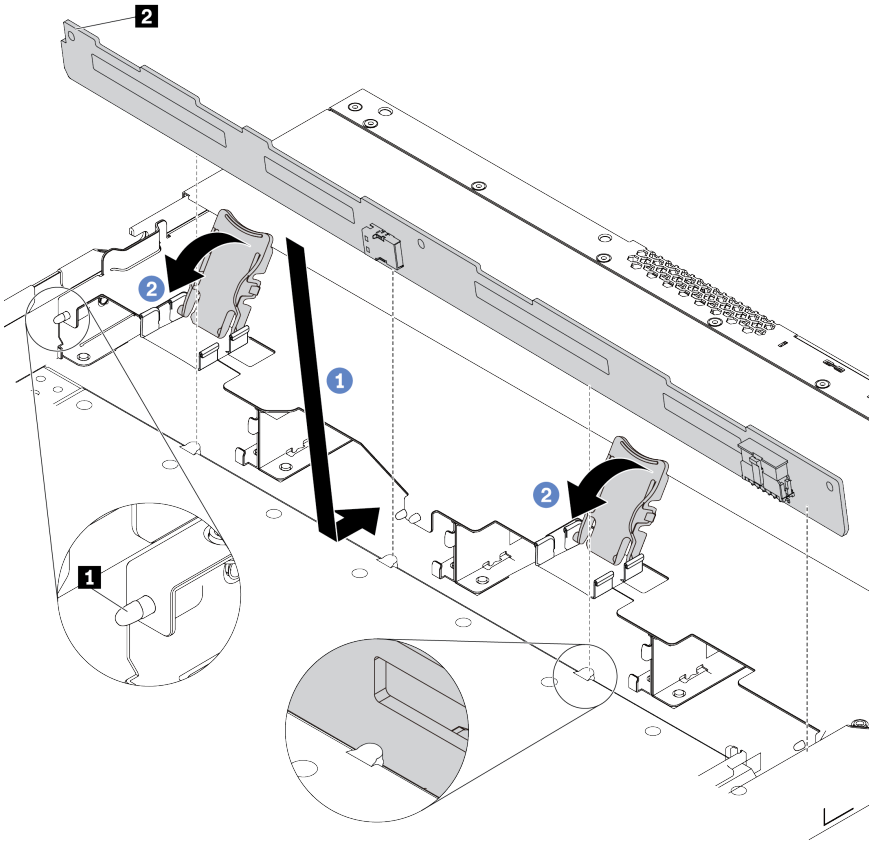

Figure 50. Installation of backplane for four 3.5-inch hot-swap drives

a. Lean the backplane backward, align its bottom with the two pins on the front chassis base, then align the two holes on the backplane with the two pins on the front drive cage so that the holes can pass through the two pins.

b. Close the release latches to secure the backplane in place.

Step 4. Connect the cables to the system board or expansion slots. See 2.5-inch/3.5-inch drive backplane (power) and 2.5-inch/3.5-inch drive backplane (signal).

After you finish

1. Reinstall all the drives and drive fillers into the drive bays. See Install a hot-swap drive.
2. Complete the parts replacement. See Complete the parts replacement.

Remove the 2.5-inch rear drive backplane

Use this information to remove the 2.5-inch rear drive backplane.

About this task

Attention:

- Read Installation Guidelines to ensure that you work safely.
- Power off the server and disconnect all power cords for this task.
- Prevent exposure to static electricity, which might lead to system halt and loss of data, by keeping static-sensitive components in their static-protective packages until installation, and handling these devices with an electrostatic-discharge wrist strap or other grounding system.

A video for this task is available at:

- Youtube: https://www.youtube.com/playlist?list=PLYV5R7hVcs-DY1RaWHYM4xDloAwuBQHR0
- Youku: http://list.youku.com/albumlist/show/id_52339628

Procedure

Step 1. Remove the top cover. See Remove the top cover.

Step 2. Remove the drives or drive fillers installed in the rear hot-swap drive cage. See Remove a hot-swap drive.

Step 3. Gently press and hold the tab on the rear hot-swap drive cage as shown and remove the air baffle from the rear hot-swap drive cage.

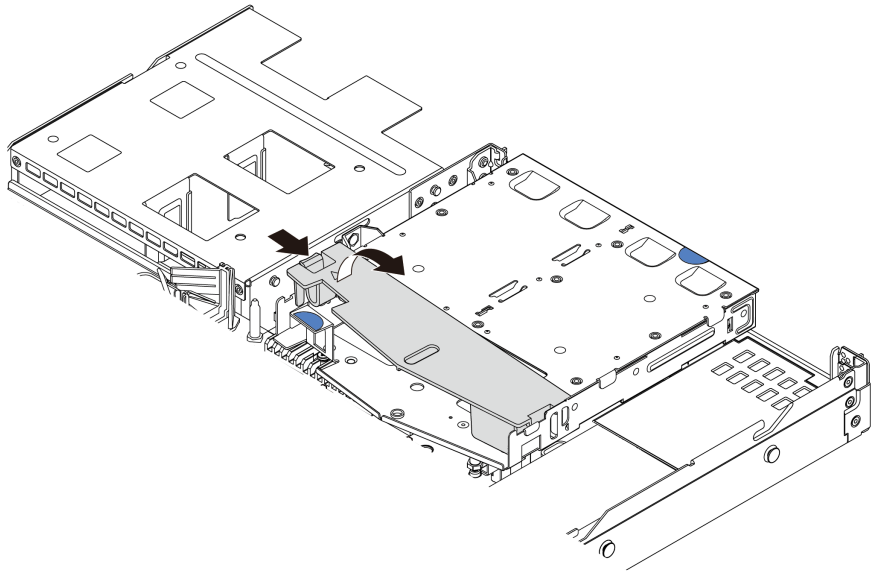

Figure 51. Air baffle removal

Step 4. Disconnect the cables from the 2.5-inch rear drive backplane.

Step 5. Carefully lift the 2.5-inch rear drive backplane out of the rear hot-swap drive cage.

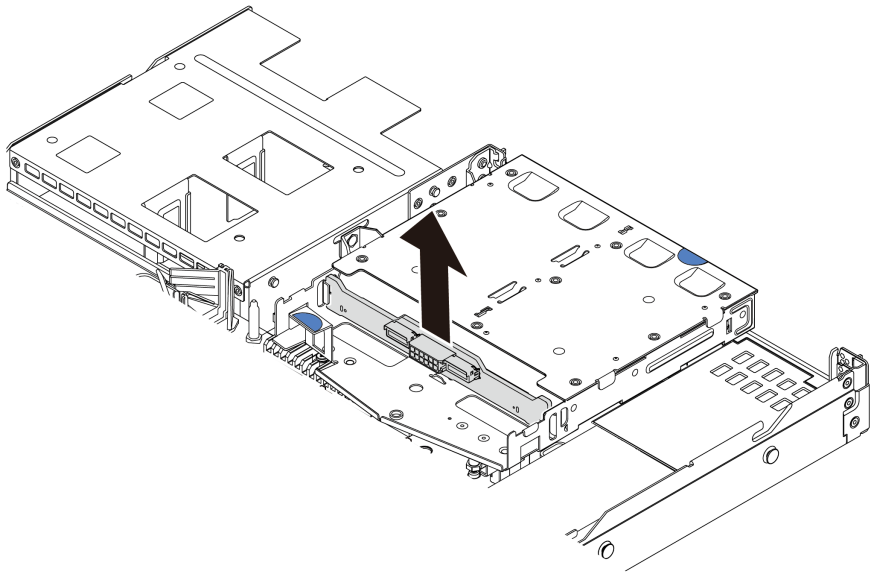

Figure 52. 2.5-inch rear drive backplane removal

After you finish

If you are instructed to return the old backplane, follow all packaging instructions and use any packaging materials that are provided.

Install the rear backplane

Use this information to install the rear backplane.

About this task

Attention:

- Read Installation Guidelines to ensure that you work safely.
- Power off the server and disconnect all power cords for this task.
- Prevent exposure to static electricity, which might lead to system halt and loss of data, by keeping static-sensitive components in their static-protective packages until installation, and handling these devices with an electrostatic-discharge wrist strap or other grounding system.

A video for this task is available at:

- Youtube: https://www.youtube.com/playlist?list=PLYV5R7hVcs-DY1RaWHYM4xDloAwuBQHR0
- Youku: http://list.youku.com/albumlist/show/id_52339628

Procedure

Step 1. Touch the static-protective package that contains the rear backplane to any unpainted surface on the outside of the server. Then, take the rear backplane out of the package and place it on a static-protective surface.

Step 2. Align the rear backplane with the rear hot-swap drive cage and lower it into the rear hot-swap drive cage.

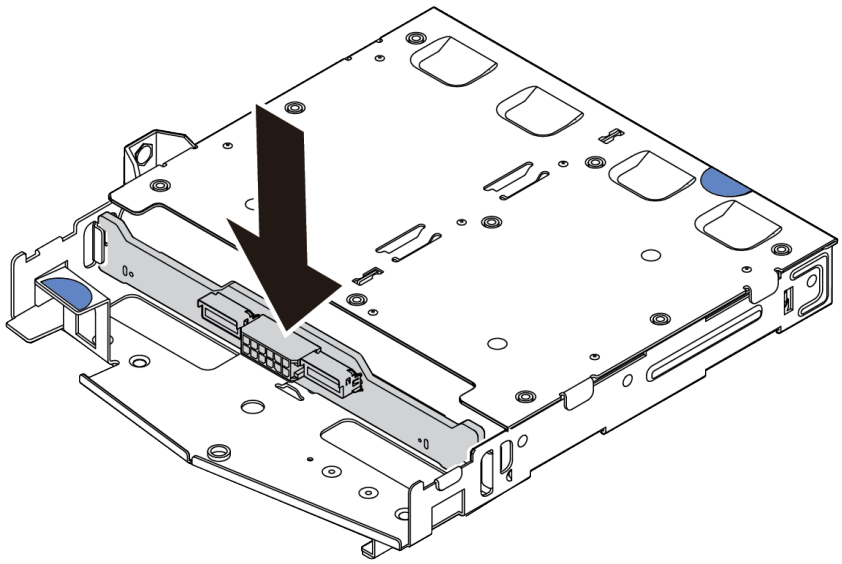

Figure 53. Rear backplane installation

Step 3. Connect the signal cable and the power cable on the rear backplane. You can refer to the Internal cable routing and locate the cable routing information for your configuration options.

Step 4. Install the air baffle into the rear hot-swap drive cage as shown.

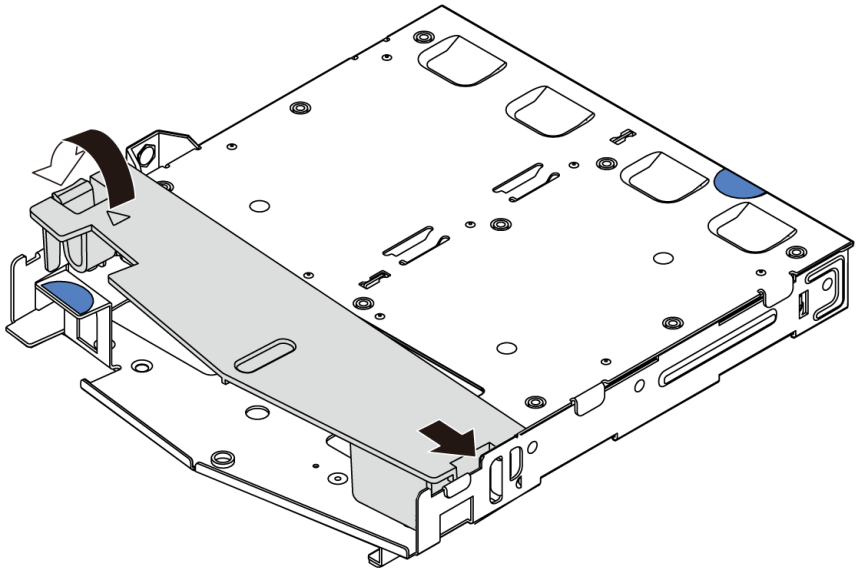

Figure 54. Air baffle installation

After you finish

1. Reinstall the drives or drive fillers into the rear hot-swap drive cage. See Install a hot-swap drive.
2. Complete the parts replacement. See Complete the parts replacement.

Remove the 7mm drive backplane

Use this information to remove the 7mm drive backplane.

About this task

Attention:

- Read Installation Guidelines to ensure that you work safely.
- Power off the server and disconnect all power cords for this task.
- Prevent exposure to static electricity, which might lead to system halt and loss of data, by keeping static-sensitive components in their static-protective packages until installation, and handling these devices with an electrostatic-discharge wrist strap or other grounding system.

A video for this task is available at:

- Youtube: https://www.youtube.com/playlist?list=PLYV5R7hVcs-DY1RaWHYM4xDloAwuBQHR0
- Youku: http://list.youku.com/albumlist/show/id_52339628

Procedure

Note: Depending on the specific type, your backplane might look different from the illustration in this topic.

Step 1. Prepare your server.

a. Remove the top cover. See Remove the top cover.

b. Remove all the installed drives and fillers (if any) from the drive bays. See Remove a hot-swap drive.

c. Record the cable connections for 7mm drives and then disconnect all cables from the backplanes. For information about the backplane cable routing, see 7mm drive backplane cable routing (power & signal).

d. Remove the 7mm drive assembly (if any) from the rear chassis. See Remove the hot-swap rear drive assembly.

Step 2. Remove the 7mm drive backplane on the top.

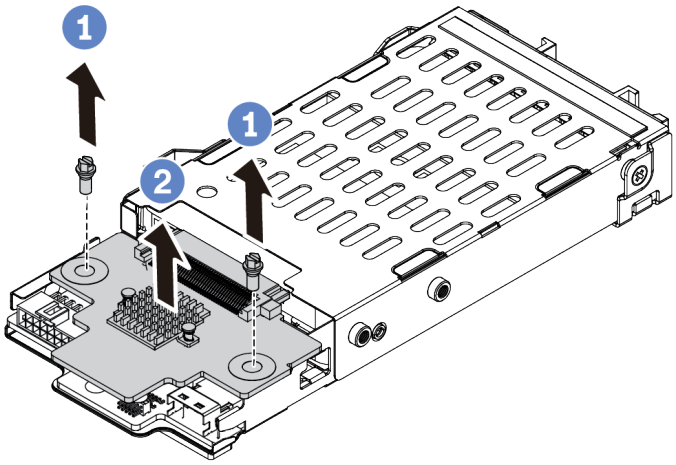

Figure 55. 7mm drive backplane removal (top)

a. Remove the two screws as shown.
b. Vertically lift the backplane up and put it aside.

Step 3. Remove the 7mm drive backplane at the bottom.

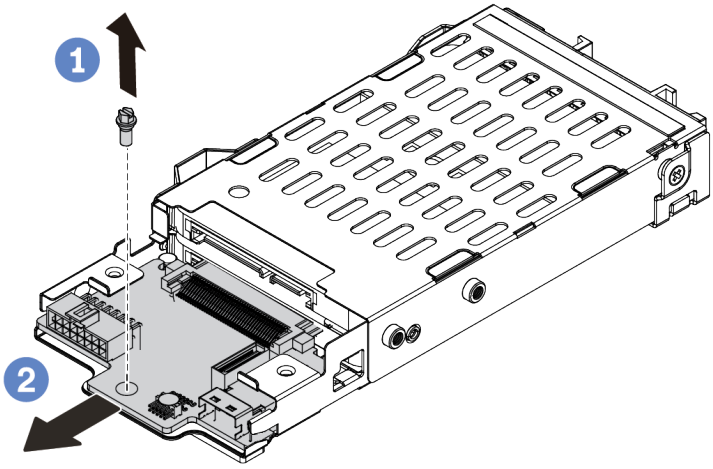

Figure 56. 7mm drive backplane removal (bottom)

a. Remove the screw as shown.
b. Remove the backplane horizontally from the cage as shown.

After you finish

If you are instructed to return the old backplanes, follow all packaging instructions and use any packaging materials that are provided.

Install the 7mm drive backplanes

Use this information to install the 7mm drive backplanes.

About this task

Attention:

- Read Installation Guidelines to ensure that you work safely.
- Power off the server and disconnect all power cords for this task.
- Prevent exposure to static electricity, which might lead to system halt and loss of data, by keeping static-sensitive components in their static-protective packages until installation, and handling these devices with an electrostatic-discharge wrist strap or other grounding system.

A video for this task is available at:

- Youtube: https://www.youtube.com/playlist?list=PLYV5R7hVcs-DY1RaWHYM4xDloAwuBQHR0
- Youku: http://list.youku.com/albumlist/show/id_52339628

Procedure

Step 1. Touch the static-protective package that contains the new backplane to any unpainted surface on the outside of the server. Then, take the new backplane out of the package and place it on a static-protective surface.

Step 2. Install the 7mm drive backplane at the bottom.

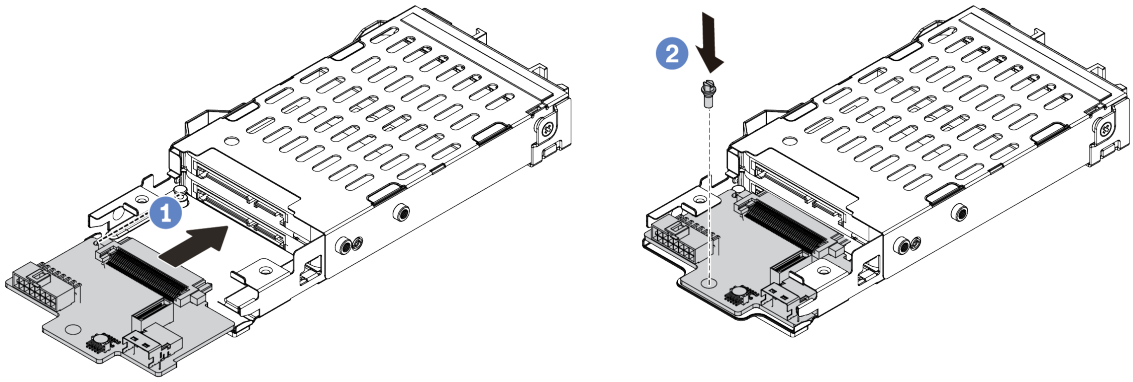

Figure 57. 7mm drive backplane installation (bottom)

a. Align the pin on the cage and slightly slide the backplane into the cage until it is fully seated.
b. Install the screw as shown.

Step 3. Install the 7mm drive backplane on the top.

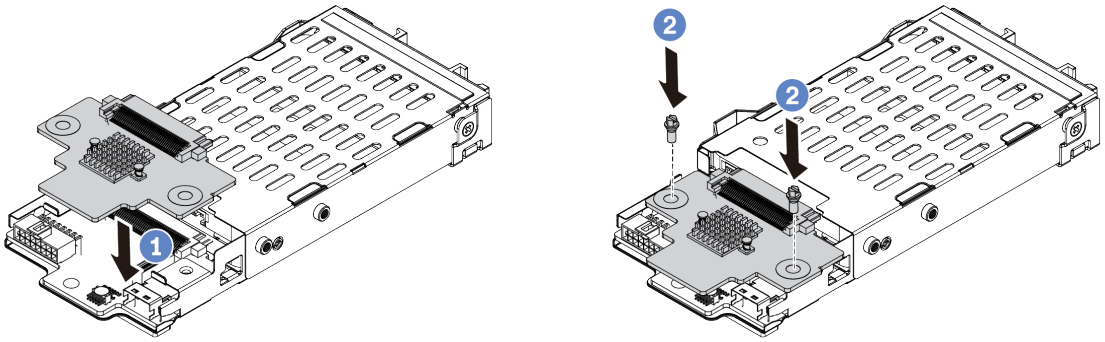

Figure 58. 7mm drive backplane installation (top)

a. Put the backplane down on the cage as shown.
b. Install the two screws to secure the backplane in place

Step 4. Connect the cables from the backplanes to the system board and riser slot. See 7mm drive backplane cable routing (power & signal).

After you finish

1. Install the 7mm drive cage assembly on the rear chassis. See Install the hot-swap rear drive assembly.
2. Reinstall all the drives and fillers (if any) into the drive bays. See Install a hot-swap drive.
3. Complete the parts replacement. See Complete the parts replacement.

Hot-swap rear drive assembly replacement

Use this information to remove and install the hot-swap rear drive assembly.

Note: The term “hot-swap drive” refers to all the supported types of 2.5-inch hot-swap hard disk drives and hot-swap solid-state drives.

Remove the hot-swap rear drive assembly

Use this information to remove the hot-swap rear drive assembly.

About this task

The following illustrates how to remove the 2.5-inch rear drive assembly. You can remove the 7mm rear drive assembly in the same way.

Attention:

- Read Installation Guidelines to ensure that you work safely.
- Power off the server and disconnect all power cords for this task.
- Prevent exposure to static electricity, which might lead to system halt and loss of data, by keeping static-sensitive components in their static-protective packages until installation, and handling these devices with an electrostatic-discharge wrist strap or other grounding system.

A video for this task is available at:

- Youtube: https://www.youtube.com/playlist?list=PLYV5R7hVcs-DY1RaWHYM4xDloAwuBQHR0
- Youku: http://list.youku.com/albumlist/show/id_52339628

Procedure

Step 1. Remove the top cover. See Remove the top cover.

Step 2. Remove the drives or drive fillers installed in the hot-swap rear drive cage. See Remove a hot-swap drive.

Step 3. Disconnect the hot-swap rear drive cage cables from the system board or the PCIe adapter.

Step 4. Hold the two blue touch points and directly lift the hot-swap rear drive cage out of the chassis.

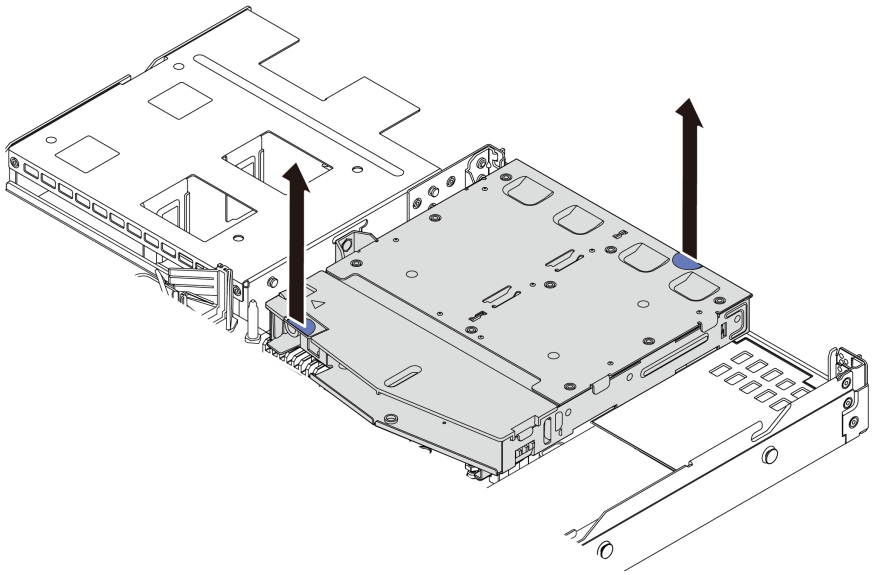

Figure 59. Hot-swap rear drive cage removal

Step 5. If the rear backplane is reused, remove the rear backplane. See Remove the 2.5-inch rear drive backplane.

After you finish

If you are instructed to return the old hot-swap rear drive cage, follow all packaging instructions and use any packaging materials that are provided.

Install the hot-swap rear drive assembly

Use this information to install the hot-swap rear drive assembly.

About this task

The following illustrates how to install the 2.5-inch rear drive assembly. You can install the 7mm rear drive assembly in the same way.

Attention:

- Read Installation Guidelines to ensure that you work safely.
- Power off the server and disconnect all power cords for this task.
- Prevent exposure to static electricity, which might lead to system halt and loss of data, by keeping static-sensitive components in their static-protective packages until installation, and handling these devices with an electrostatic-discharge wrist strap or other grounding system.

A video for this task is available at:

- Youtube: https://www.youtube.com/playlist?list=PLYV5R7hVcs-DY1RaWHYM4xDloAwuBQHR0
- Youku: http://list.youku.com/albumlist/show/id_52339628

Procedure

Step 1. Touch the static-protective package that contains the hot-swap rear drive cage to any unpainted surface on the outside of the server. Then, take the hot-swap rear drive cage out of the package and place it on a static-protective surface.

Step 2. Gently press and hold the tab on the hot-swap rear drive cage as shown and remove the air baffle from the hot-swap rear drive cage.

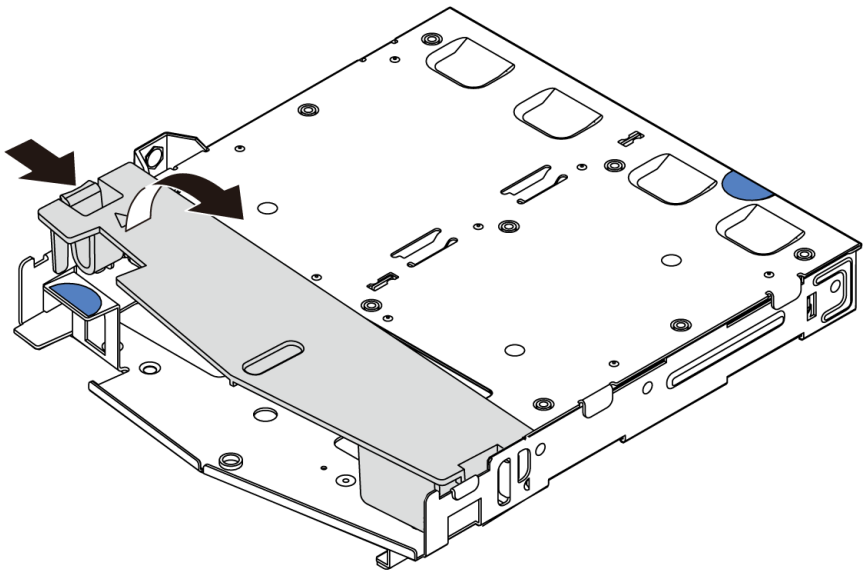

Figure 60. Air baffle removal

Step 3. Align the rear backplane with the hot-swap rear drive cage and lower it into the hot-swap rear drive cage.

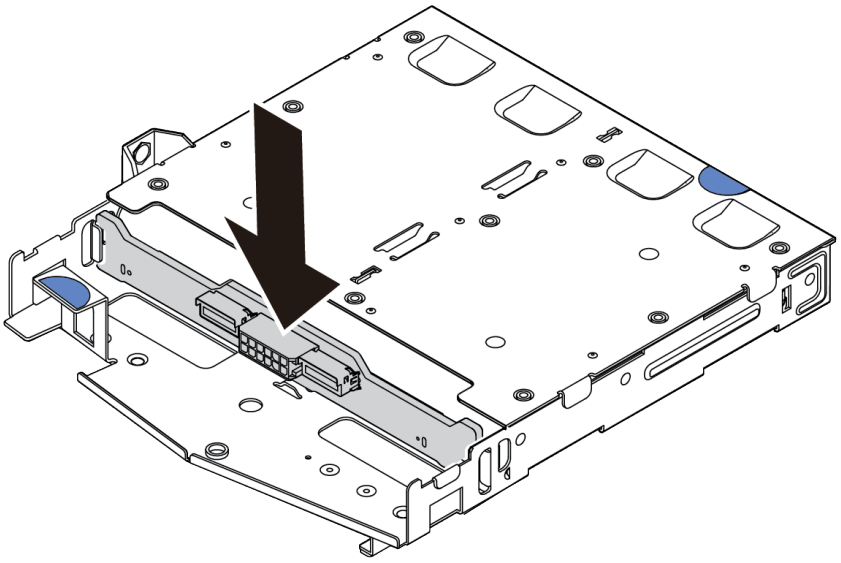

Figure 61. Rear backplane installation

Step 4. Connect the signal cable and the power cable on the rear backplane. You can refer to the Internal cable routing and locate the cable routing information for your configuration options.

Step 5. Install the air baffle into the hot-swap rear drive cage as shown.

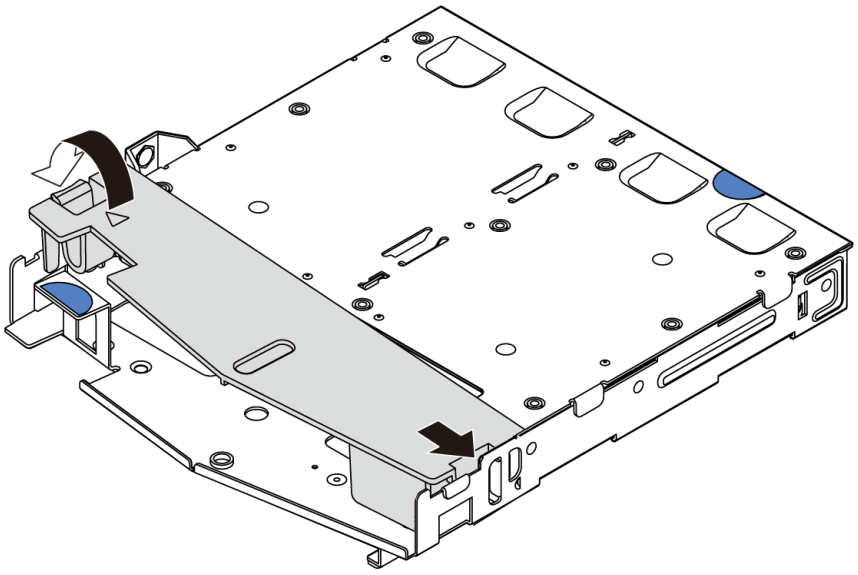

Figure 62. Air baffle installation

Step 6. Align the pins on the hot-swap rear drive cage with the corresponding hole and slot in the chassis. Then, lower the hot-swap rear drive cage into the chassis until it is fully seated.

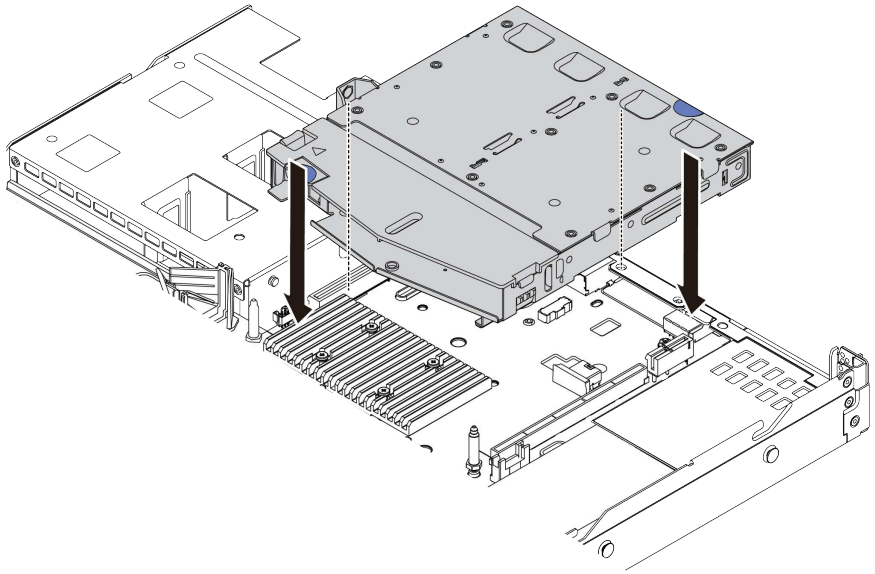

Figure 63. Hot-swap rear drive cage installation

Step 7. Connect the signal cable and connect the power cable to the system board. You can refer to the Internal cable routing and locate the cable routing information for your configuration options.

After you finish

1. Reinstall the drives or drive fillers into the hot-swap rear drive cage. See Install a hot-swap drive.
2. Complete the parts replacement. See Complete the parts replacement.

Hot–swap power supply unit replacement

Use this information to remove and install a hot-swap power supply unit.

Remove a hot-swap power supply unit

Use this information to remove a power supply unit.

About this task

The following describes the information that you must consider when installing a power supply:

- The server is shipped with only one power supply by default. In this case, the power supply is non-hot-swap and before removing it, you must turn off the server first. To support redundancy mode or hot-swap, install an additional hot-swap power supply.
- If you are replacing the existing power supply with a new power supply:
  - Use Lenovo Capacity Planner to calculate the required power capacity for what is configured for your server. More information about Lenovo Capacity Planner is available at:

    https://datacentersupport.lenovo.com/solutions/lnvo-lcp
  - Ensure that the devices that you are installing are supported. For a list of supported optional devices for the server, go to:
    https://static.lenovo.com/us/en/serverproven/index.shtml
  - Attach the power information label that comes with this option onto the existing label near the power supply.

Figure 64. Example power supply unit label on the top cover

Safety information for AC power supplies

S035

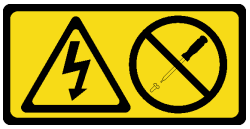

CAUTION:
Never remove the cover on a power supply or any part that has this label attached. Hazardous voltage, current, and energy levels are present inside any component that has this label attached. There are no serviceable parts inside these components. If you suspect a problem with one of these parts, contact a service technician.

S002

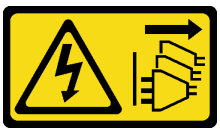

CAUTION:
The power-control button on the device and the power switch on the power supply do not turn off the electrical current supplied to the device. The device also might have more than one power cord. To remove all electrical current from the device, ensure that all power cords are disconnected from the power source.

S001

DANGER

Electrical current from power, telephone, and communication cables is hazardous.
To avoid a shock hazard:

- **Do not connect or disconnect any cables or perform installation, maintenance, or reconfiguration of this product during an electrical storm.**
- **Connect all power cords to a properly wired and grounded electrical outlet.**
- **Connect any equipment that will be attached to this product to properly wired outlets .**
- **When possible, use one hand only to connect or disconnect signal cables.**
- **Never turn on any equipment when there is evidence of fire, water, or structural damage.**
- **Disconnect the attached power cords, telecommunications systems, networks, and modems before you open the device covers, unless instructed otherwise in the installation and configuration procedures.**
- **Connect and disconnect cables as described in the following table when installing, moving, or opening covers on this product or attached devices.**

To Connect:	**To Disconnect:**
1. Turn everything OFF. 2. Attach all cables to devices. 3. Attach signal cables to connectors. 4. Attach power cords to outlet. 5. Turn device ON.	1. Turn everything OFF. 2. Remove power cords from outlet. 3. Remove signal cables from connectors. 4. Remove all cables from devices.

Safety information for DC power supplies

CAUTION:
240 V dc input (input range: 180-300 V dc) is supported in Chinese Mainland ONLY. Power supply with 240 V dc input cannot support hot plugging power cord function. Before removing the power supply with dc input, please turn off server or disconnect dc power sources at the breaker panel or by turning off the power source. Then, remove the power cord.

在直流输入状态下，若电源供应器插座不支持热插拔功能，请务必不要对设备电源线进行热插拔，此操作可能导致设备损坏及数据丢失。因错误执行热插拔导致的设备故障或损坏，不属于保修范围。

NEVER CONNECT AND DISCONNECT THE POWER SUPPLY CABLE AND EQUIPMENT WHILE YOUR EQUIPMENT IS POWERED ON WITH DC SUPPLY (hot-plugging). Otherwise you may damage the equipment and result in data loss, the damages and losses result from incorrect operation of the equipment will not be covered by the manufacturers' warranty.

S035

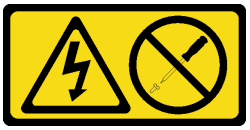

CAUTION:
Never remove the cover on a power supply or any part that has this label attached. Hazardous voltage, current, and energy levels are present inside any component that has this label attached. There are no serviceable parts inside these components. If you suspect a problem with one of these parts, contact a service technician.

S019

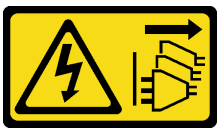

CAUTION:
The power-control button on the device does not turn off the electrical current supplied to the device. The device also might have more than one connection to dc power. To remove all electrical current from the device, ensure that all connections to dc power are disconnected at the dc power input terminals.

S029

DANGER

Electrical current from power, telephone, and communication cables is hazardous.
To avoid a shock hazard:

- **Do not connect or disconnect any cables or perform installation, maintenance, or reconfiguration of this product during an electrical storm.**
- **Connect all power cords to a properly wired and grounded power source.**
- **Connect to properly wired power sources any equipment that will be attached to this product.**
- **When possible, use one hand only to connect or disconnect signal cables.**
- **Never turn on any equipment when there is evidence of fire, water, or structural damage.**
- **Disconnect the attached ac power cords, dc power sources, network connections, telecommunications systems, and serial cables before you open the device covers, unless you are instructed otherwise in the installation and configuration procedures.**
- **Connect and disconnect cables as described in the following table when installing, moving, or opening covers on this product or attached devices.**

To Connect:

1. Turn OFF all power sources and equipment that is to be attached to this product.
2. Attach signal cables to the product.
3. Attach power cords to the product.
   - For ac systems, use appliance inlets.
   - For dc systems, ensure correct polarity of -48 V dc connections: RTN is + and -48 V dc is -. Earth ground should use a two-hole lug for safety.
4. Attach signal cables to other devices.
5. Connect power cords to their sources.
6. Turn ON all the power sources.

To Disconnect:

1. Turn OFF all power sources and equipment that is to be attached to this product.
   - For ac systems, remove all power cords from the chassis power receptacles or interrupt power at the ac power distribution unit.
   - For dc systems, disconnect dc power sources at the breaker panel or by turning off the power source. Then, remove the dc cables.
2. Remove the signal cables from the connectors.
3. Remove all cables from the devices.

Attention:

- Read Installation Guidelines to ensure that you work safely.
- Prevent exposure to static electricity, which might lead to system halt and loss of data, by keeping static-sensitive components in their static-protective packages until installation, and handling these devices with an electrostatic-discharge wrist strap or other grounding system.

A video for this task is available at:

- Youtube: https://www.youtube.com/playlist?list=PLYV5R7hVcs-DY1RaWHYM4xDloAwuBQHR0
- Youku: http://list.youku.com/albumlist/show/id_52339628

Procedure

Step 1. If the server is in a rack, adjust the cable management arm (CMA) to gain access to the power supply bay.

If you have installed the 1U CMA Upgrade Kit for Toolless Slide Rail or Toolless Slide Rail Kit with 1U CMA, do the following:

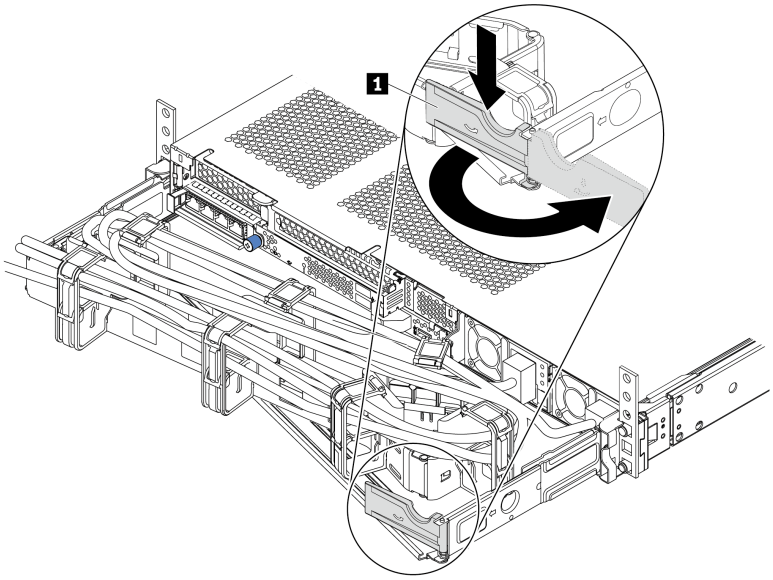

Figure 65. CMA adjustment

1. Press down the stop bracket 1 and rotate it to the open position.
2. Rotate the CMA out of the way to gain access to the power supply.

Step 2. Disconnect the power cord from the hot-swap power supply.

Note: If you are replacing two power supplies, replace them one by one to ensure that the power supply to the server is not interrupted. Do not disconnect the power cord from the secondly replaced power supply until the power output LED for the firstly replaced power supply is lit. For the location of the power output LED, refer to Rear view LEDs.

Step 3. Press the release tab toward the handle and carefully pull the handle at the same time to slide the hot-swap power supply out of the chassis.

Note:

Slightly pull the power supply upwards when sliding the power supply out of the chassis, if you have installed one of the following CMA kits:

- 1U CMA Upgrade Kit for Toolless Slide Rail
- Toolless Slide Rail Kit with 1U CMA

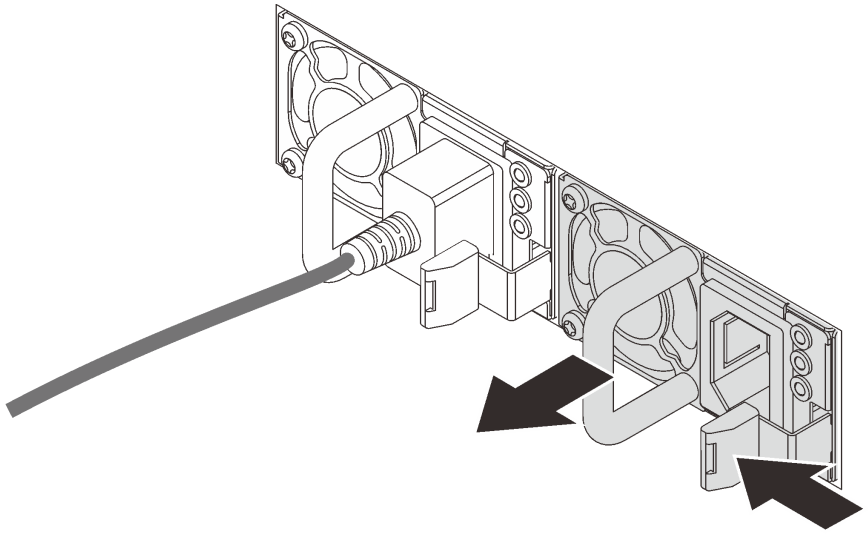

Figure 66. Hot-swap power supply removal

After you finish

1. Install a new power supply or install the power-supply filler to cover the power supply bay. See Install a hot-swap power supply.

   Important: To ensure proper cooling during normal server operation, both of the power supply bays must be occupied. This means that each bay must have a power supply installed; or one has a power supply installed and the other has a power supply filler installed.

2. If you are instructed to return the old hot-swap power supply, follow all packaging instructions and use any packaging materials that are provided.

Install a hot-swap power supply

Use this information to install a hot-swap power supply.

About this task

The following describes the information that you must consider when installing a power supply:

- The server is shipped with only one power supply by default. In this case, the power supply is non-hot-swap and before removing it, you must turn off the server first. To support redundancy mode or hot-swap, install an additional hot-swap power supply.
- If you are replacing the existing power supply with a new power supply:
  - Use Lenovo Capacity Planner to calculate the required power capacity for what is configured for your server. More information about Lenovo Capacity Planner is available at:

    https://datacentersupport.lenovo.com/solutions/lnvo-lcp
  - Ensure that the devices that you are installing are supported. For a list of supported optional devices for the server, go to:
    https://static.lenovo.com/us/en/serverproven/index.shtml
  - Attach the power information label that comes with this option onto the existing label near the power supply.

Figure 67. Example power supply unit label on the top cover

Safety information for AC power supplies

S035

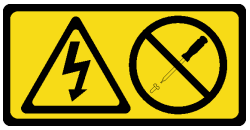

CAUTION:
Never remove the cover on a power supply or any part that has this label attached. Hazardous voltage, current, and energy levels are present inside any component that has this label attached. There are no serviceable parts inside these components. If you suspect a problem with one of these parts, contact a service technician.

S002

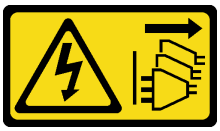

CAUTION:
The power-control button on the device and the power switch on the power supply do not turn off the electrical current supplied to the device. The device also might have more than one power cord. To remove all electrical current from the device, ensure that all power cords are disconnected from the power source.

S001

DANGER

Electrical current from power, telephone, and communication cables is hazardous.
To avoid a shock hazard:

- **Do not connect or disconnect any cables or perform installation, maintenance, or reconfiguration of this product during an electrical storm.**
- **Connect all power cords to a properly wired and grounded electrical outlet.**
- **Connect any equipment that will be attached to this product to properly wired outlets .**
- **When possible, use one hand only to connect or disconnect signal cables.**
- **Never turn on any equipment when there is evidence of fire, water, or structural damage.**
- **Disconnect the attached power cords, telecommunications systems, networks, and modems before you open the device covers, unless instructed otherwise in the installation and configuration procedures.**
- **Connect and disconnect cables as described in the following table when installing, moving, or opening covers on this product or attached devices.**

To Connect:	To Disconnect:
1. Turn everything OFF. 2. Attach all cables to devices. 3. Attach signal cables to connectors. 4. Attach power cords to outlet. 5. Turn device ON.	1. Turn everything OFF. 2. Remove power cords from outlet. 3. Remove signal cables from connectors. 4. Remove all cables from devices.

Safety information for DC power supplies

CAUTION:
240 V dc input (input range: 180-300 V dc) is supported in Chinese Mainland ONLY. Power supply with 240 V dc input cannot support hot plugging power cord function. Before removing the power supply with dc input, please turn off server or disconnect dc power sources at the breaker panel or by turning off the power source. Then, remove the power cord.

在直流输入状态下，若电源供应器插座不支持热插拔功能，请务必不要对设备电源线进行热插拔，此操作可能导致设备损坏及数据丢失。因错误执行热插拔导致的设备故障或损坏，不属于保修范围。

NEVER CONNECT AND DISCONNECT THE POWER SUPPLY CABLE AND EQUIPMENT WHILE YOUR EQUIPMENT IS POWERED ON WITH DC SUPPLY (hot-plugging). Otherwise you may damage the equipment and result in data loss, the damages and losses result from incorrect operation of the equipment will not be covered by the manufacturers' warranty.

S035

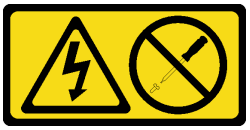

CAUTION:
Never remove the cover on a power supply or any part that has this label attached. Hazardous voltage, current, and energy levels are present inside any component that has this label attached. There are no serviceable parts inside these components. If you suspect a problem with one of these parts, contact a service technician.

S019

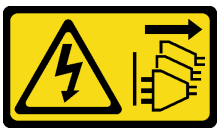

CAUTION:
The power-control button on the device does not turn off the electrical current supplied to the device. The device also might have more than one connection to dc power. To remove all electrical current from the device, ensure that all connections to dc power are disconnected at the dc power input terminals.

S029

DANGER

Electrical current from power, telephone, and communication cables is hazardous.
To avoid a shock hazard:

- **Do not connect or disconnect any cables or perform installation, maintenance, or reconfiguration of this product during an electrical storm.**
- **Connect all power cords to a properly wired and grounded power source.**
- **Connect to properly wired power sources any equipment that will be attached to this product.**
- **When possible, use one hand only to connect or disconnect signal cables.**
- **Never turn on any equipment when there is evidence of fire, water, or structural damage.**
- **Disconnect the attached ac power cords, dc power sources, network connections, telecommunications systems, and serial cables before you open the device covers, unless you are instructed otherwise in the installation and configuration procedures.**
- **Connect and disconnect cables as described in the following table when installing, moving, or opening covers on this product or attached devices.**

To Connect:

1. Turn OFF all power sources and equipment that is to be attached to this product.
2. Attach signal cables to the product.
3. Attach power cords to the product.
   - For ac systems, use appliance inlets.
   - For dc systems, ensure correct polarity of -48 V dc connections: RTN is + and -48 V dc is -. Earth ground should use a two-hole lug for safety.
4. Attach signal cables to other devices.
5. Connect power cords to their sources.
6. Turn ON all the power sources.

To Disconnect:

1. Turn OFF all power sources and equipment that is to be attached to this product.
   - For ac systems, remove all power cords from the chassis power receptacles or interrupt power at the ac power distribution unit.
   - For dc systems, disconnect dc power sources at the breaker panel or by turning off the power source. Then, remove the dc cables.
2. Remove the signal cables from the connectors.
3. Remove all cables from the devices.

Attention:

- Read Installation Guidelines to ensure that you work safely.
- Prevent exposure to static electricity, which might lead to system halt and loss of data, by keeping static-sensitive components in their static-protective packages until installation, and handling these devices with an electrostatic-discharge wrist strap or other grounding system.

A video for this task is available at:

- Youtube: https://www.youtube.com/playlist?list=PLYV5R7hVcs-DY1RaWHYM4xDloAwuBQHR0
- Youku: http://list.youku.com/albumlist/show/id_52339628

Procedure

Step 1. Touch the static-protective package that contains the hot-swap power supply to any unpainted surface on the outside of the server. Then, take the hot-swap power supply out of the package and place it on a static-protective surface.

Step 2. If there is a power-supply filler installed, remove it.

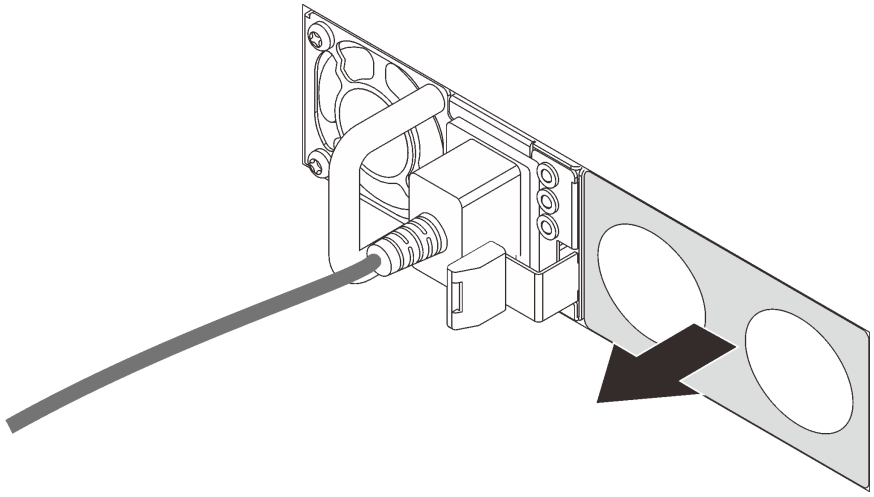

Figure 68. Hot-swap power supply filler removal

Step 3. Slide the new hot-swap power supply into the bay until it snaps into position.

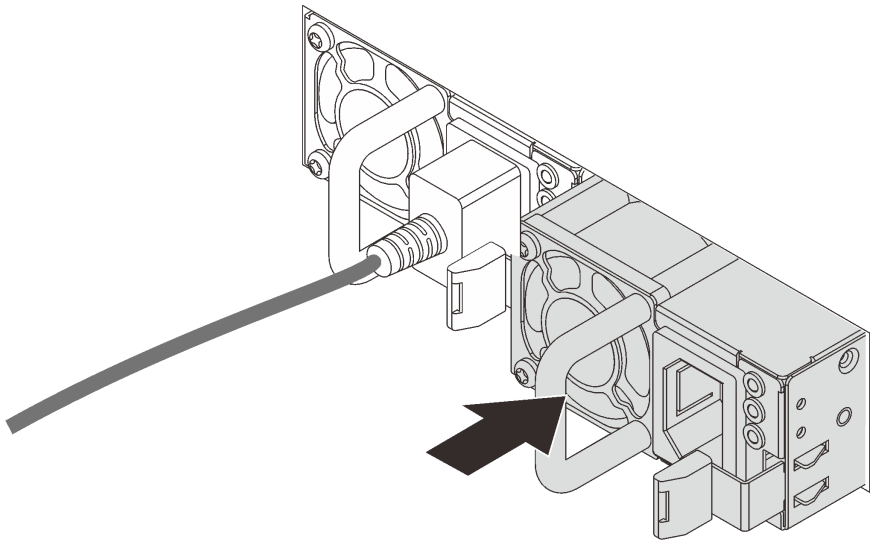

Figure 69. Hot-swap power supply installation

After you finish

1. Connect one end of the power cord to the new power supply connector; then, connect the other end of the power cord into a properly grounded electrical outlet.
2. If you have adjusted the CMA to gain access to the power supply bay, properly readjust the CMA back in place.

3. If the server is turned off, turn on the server. Ensure that both the power input LED and the power output LED on the power supply are lit, indicating that the power supply is operating properly.

Internal CFF RAID/HBA adapter replacement

Use this information to remove and install the internal CFF RAID/HBA adapter.

Remove the internal CFF RAID/HBA adapter

Use this information to remove the internal CFF RAID/HBA adapter.

About this task

Attention:

- Read Installation Guidelines to ensure that you work safely.
- Power off the server and disconnect all power cords for this task.
- Prevent exposure to static electricity, which might lead to system halt and loss of data, by keeping static-sensitive components in their static-protective packages until installation, and handling these devices with an electrostatic-discharge wrist strap or other grounding system.

A video for this task is available at:

- Youtube: https://www.youtube.com/playlist?list=PLYV5R7hVcs-DY1RaWHYM4xDloAwuBQHR0
- Youku: http://list.youku.com/albumlist/show/id_52339628

Procedure

Step 1. Remove the top cover. See Remove the top cover.

Step 2. Remove any components that may impede access to the internal CFF RAID/HBA adapter.

Step 3. Disconnect all cables from the internal CFF RAID/HBA adapter.

Step 4. Lift the release pin, slightly slide the internal CFF RAID/HBA adapter as shown, and carefully lift it out of the chassis.

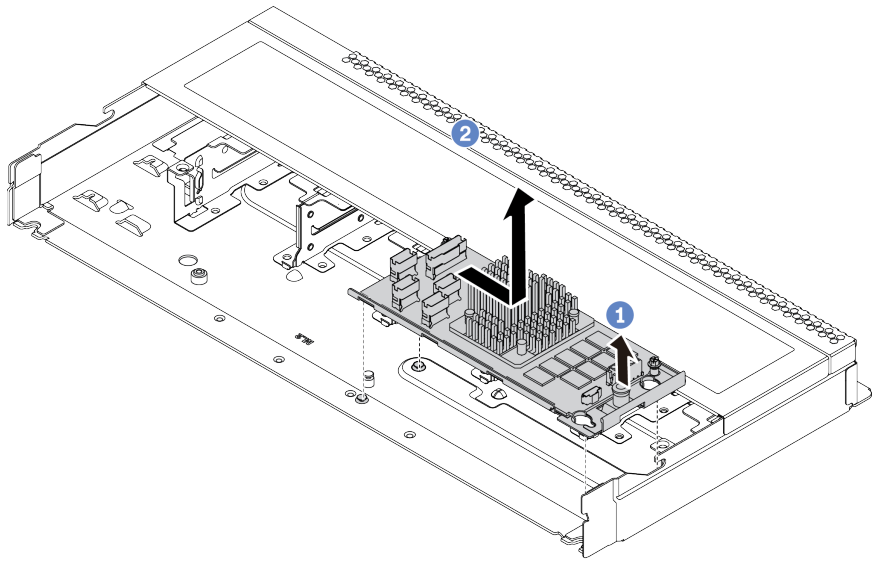

Figure 70. Internal CFF RAID/HBA adapter removal

After you finish

If you are instructed to return the old internal CFF RAID/HBA adapter, follow all packaging instructions and use any packaging materials that are provided.

Install the internal CFF RAID/HBA adapter

Use this information to install the internal CFF RAID/HBA adapter.

About this task

Attention:

- Read Installation Guidelines to ensure that you work safely.
- Power off the server and disconnect all power cords for this task.
- Prevent exposure to static electricity, which might lead to system halt and loss of data, by keeping static-sensitive components in their static-protective packages until installation, and handling these devices with an electrostatic-discharge wrist strap or other grounding system.

A video for this task is available at:

- Youtube: https://www.youtube.com/playlist?list=PLYV5R7hVcs-DY1RaWHYM4xDloAwuBQHR0
- Youku: http://list.youku.com/albumlist/show/id_52339628

Procedure

Step 1. Touch the static-protective package that contains the internal CFF RAID/HBA adapter to any unpainted surface on the outside of the server. Then, take the internal CFF RAID/HBA adapter out of the package and place it on a static-protective surface.

Step 2. Align the notches on the tray with the pins on the chassis, place down the internal CFF RAID/HBA adapter, and slightly slide it as shown to secure it on the chassis.

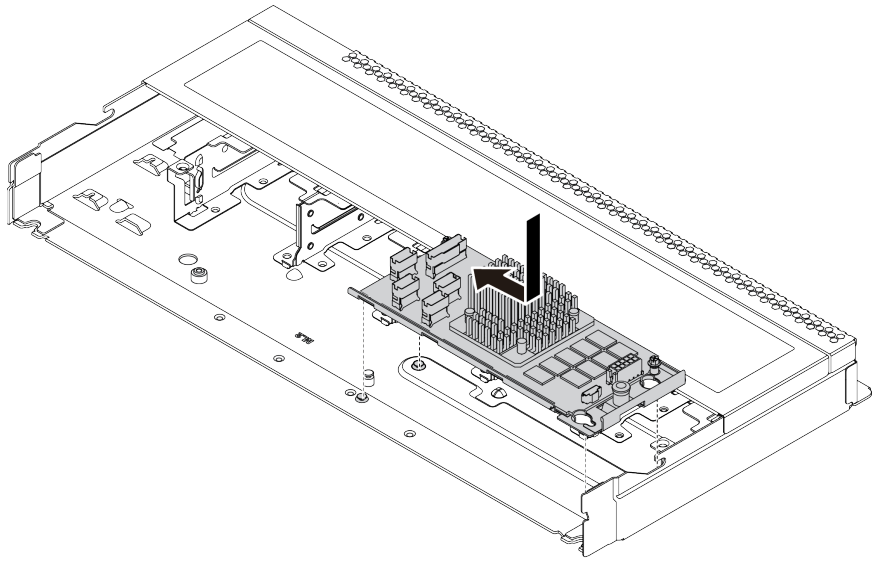

Figure 71. Internal CFF RAID/HBA adapter installation

Step 3. Connect cables to the internal CFF RAID/HBA adapter.

After you finish

Complete the parts replacement. See Complete the parts replacement.

Intrusion switch replacement

Use this information to remove and install an intrusion switch.

The intrusion switch informs you that the server cover is not properly installed or closed by creating an event in the system event log (SEL).

Remove an intrusion switch

Use this information to remove an intrusion switch.

About this task

Attention:

- Read Installation Guidelines to ensure that you work safely.
- Power off the server and disconnect all power cords for this task.
- Prevent exposure to static electricity, which might lead to system halt and loss of data, by keeping static-sensitive components in their static-protective packages until installation, and handling these devices with an electrostatic-discharge wrist strap or other grounding system.

A video for this task is available at:

- Youtube: https://www.youtube.com/playlist?list=PLYV5R7hVcs-DY1RaWHYM4xDloAwuBQHR0
- Youku: http://list.youku.com/albumlist/show/id_52339628

Procedure

Step 1. Remove the top cover. See Remove the top cover.

Step 2. Disconnect the cable of the intrusion switch from the system board. For the location of the intrusion switch connector and cable routing information, refer to System board components and Intrusion switch cable routing.

Step 3. Slide the intrusion switch as shown to remove it.

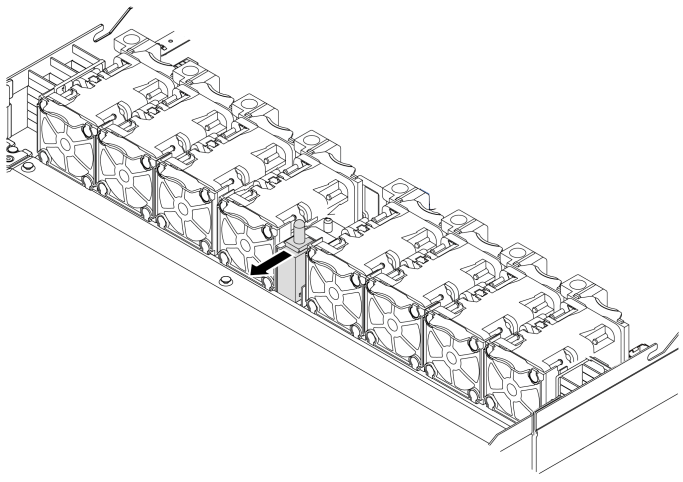

Figure 72. Intrusion switch removal

After you finish

If you are instructed to return the old intrusion switch, follow all packaging instructions and use any packaging materials that are provided.

Install an intrusion switch

Use this information to install an intrusion switch.

About this task

Attention:

- Read Installation Guidelines to ensure that you work safely.
- Power off the server and disconnect all power cords for this task.
- Prevent exposure to static electricity, which might lead to system halt and loss of data, by keeping static-sensitive components in their static-protective packages until installation, and handling these devices with an electrostatic-discharge wrist strap or other grounding system.

A video for this task is available at:

- Youtube: https://www.youtube.com/playlist?list=PLYV5R7hVcs-DY1RaWHYM4xDloAwuBQHR0
- Youku: http://list.youku.com/albumlist/show/id_52339628

Procedure

Step 1. Touch the static-protective package that contains the intrusion switch to any unpainted surface on the outside of the server. Then, take the intrusion switch out of the package and place them on a static-protective surface.

Step 2. Insert the intrusion switch and push it in the direction as shown until it is fully seated.

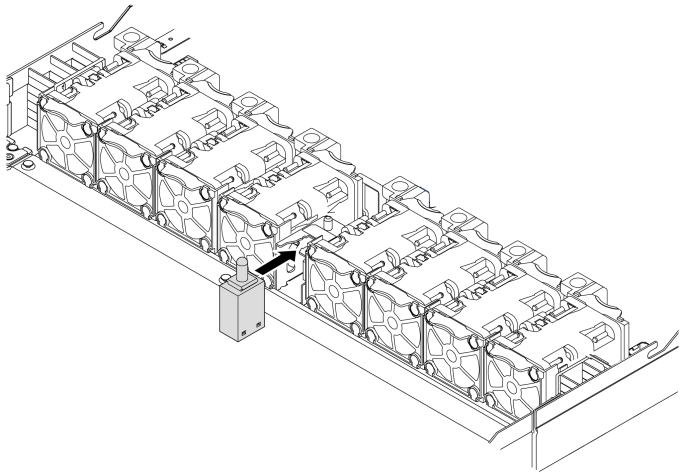

Figure 73. Intrusion switch installation

After you finish

1. Connect the cable of the intrusion switch to the intrusion switch connector on the system board by referring to Intrusion switch cable routing. For the location of the intrusion switch connector, refer to System board components.
2. Complete the parts replacement. See Complete the parts replacement.

Memory module replacement

Use this information to remove and install a memory module.

Remove a memory module

Use this information to remove a memory module.

About this task

Attention:

- Read Installation Guidelines to ensure that you work safely.
- Power off the server and disconnect all power cords for this task.
- Memory modules are sensitive to static discharge and require special handling. Refer to the standard guidelines for Handling static-sensitive devices.
  - Always wear an electrostatic-discharge strap when removing or installing memory modules. Electrostatic-discharge gloves can also be used.
  - Never hold two or more memory modules together so that they touch. Do not stack memory modules directly on top of each other during storage.
  - Never touch the gold memory module connector contacts or allow these contacts to touch the outside of the memory module connector housing.
  - Handle memory modules with care: never bend, twist, or drop a memory module.
  - Do not use any metal tools (such as jigs or clamps) to handle the memory modules, because the rigid metals may damage the memory modules.
  - Do not insert memory modules while holding packages or passive components, which can cause package cracks or detachment of passive components by the high insertion force.

A video for this task is available at:

- Youtube: https://www.youtube.com/playlist?list=PLYV5R7hVcs-DY1RaWHYM4xDloAwuBQHR0
- Youku: http://list.youku.com/albumlist/show/id_52339628

Procedure

Step 1. Remove the top cover. See Remove the top cover.

Step 2. If your server comes with an air baffle, remove it. See Remove the air baffle.

Step 3. Remove the memory module from the slot.

mm

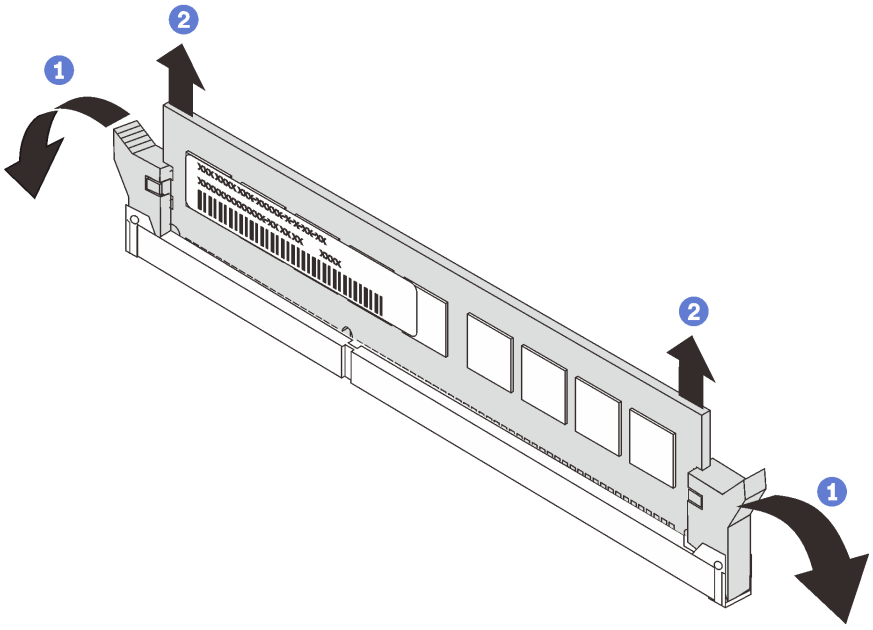

Figure 74. Memory module removal

a. Open the retaining clip on each end of the memory module slot.

Attention: To avoid breaking the retaining clips or damaging the memory module slots, handle the clips gently.

b. Grasp the memory module at both ends and carefully lift it out of the slot.

After you finish

1. Install a memory module filler or a new memory module to cover the slot. See Install a memory module.
2. If you are instructed to return the old memory module, follow all packaging instructions and use any packaging materials that are provided.

Memory module installation rules

Memory modules must be installed in a specific order based on the memory configuration that you implement on your server.

Your server has 8 channels, 32 memory slots, and supports:

- Minimum capacity:
  - 16 GB using RDIMMs
  - 128 GB using 3DS RDIMMs
- Maximum capacity:
  - 2 TB using RDIMMs
  - 4 TB using 3DS RDIMMs
- Type (depending on the model): TruDDR4 3200, dual-rank, 16 GB/32 GB/64 GB RDIMM
  For a list of supported memory options, see: https://static.lenovo.com/us/en/serverproven/index.shtml

Note: The operating speed and total memory capacity depend on the processor model and UEFI settings.

The following figure and table help you locate the memory slots and channels on the system board.

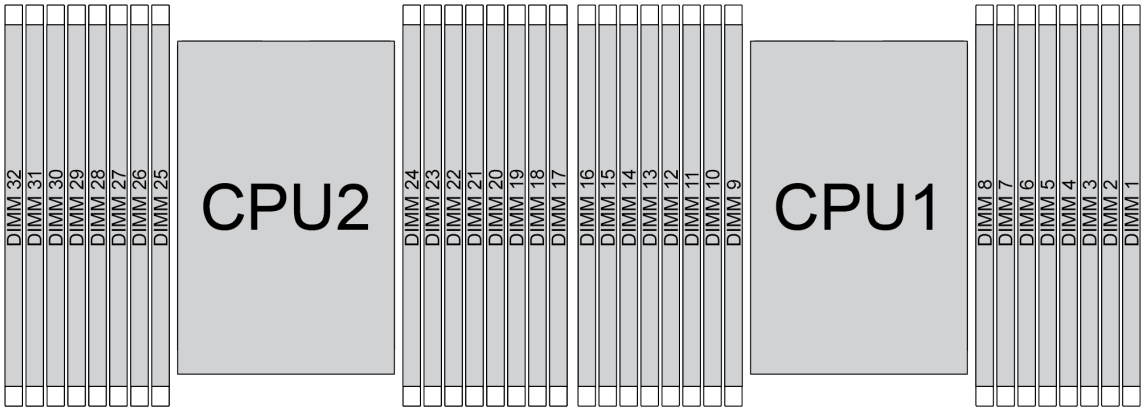

Figure 75. Memory module locations

Table 28. Memory slot and channel identification

Channel	D1	D0	C1	C0	B1	B0	A1	A0	E0	E1	F0	F1	G0	G1	H0	H1
Slot number	16	15	14	13	12	11	10	9	8	7	6	5	4	3	2	1
	32	31	30	29	28	27	26	25	24	23	22	21	20	19	18	17

Rules you need to follow when installing or replacing a DIMM.

- **Slot**:
  - When a **data bus daisy chain topology** is used: populate DIMMs **from farthest slot (slot 1) to closest slot (slot 0) to the processor** on a per-channel basis.
  - When a **data bus balanced tee route topology** is used: populate DIMMs **in either slot** on a per-channel basis.

  Table 29. DIMM installation sequence

Number of processor	Slot sequence
With one processor	14, 16, 3, 1, 10, 12, 7, 5, 13, 15, 4, 2, 9, 11, 8, 6
With two processors	14, 30, 16, 32, 3, 19, 1, 17, 10, 26, 12, 28, 7, 23, 5, 21, 13, 29, 15, 31, 4, 20, 2, 18, 9, 25, 11, 27, 8, 24, 6, 22

- **Capacity**:

  DIMMs with different capacities (only two different capacities) **can be mixed**, install the one with **the highest capacity first**.
- **Rank**:

  DIMMs with different ranks **can be mixed**, install the one with **the highest rank first**.
- **Frequency**:

  DIMMs with different frequencies **can be mixed** in the same channel.
- **Voltage**:

  DIMMs with different operating voltage **cannot be mixed**. (The only supported DIMM voltage is 1.2V.)
- **ECC/Non-ECC**:

  ECC and non-ECC DIMM **cannot be mixed**. (Non-ECC DIMM is not supported for the server.)
- **DRAM**:

  x4 and x8 DRAM based DIMMs **can be mixed**, but **not in the same channel**.
- **Type**:

  DIMMs of different base module types **can be mixed**, but **not in the same channel**.
- **Vendor**:

  DIMMs from different vendors **can be mixed** in the same channel.

Install a memory module

Use this information to install a memory module.

About this task

Attention:

- Read Installation Guidelines to ensure that you work safely.
- Power off the server and disconnect all power cords for this task.
- Memory modules are sensitive to static discharge and require special handling. Refer to the standard guidelines for Handling static-sensitive devices:
  - Always wear an electrostatic-discharge strap when removing or installing memory modules. Electrostatic-discharge gloves can also be used.
  - Never hold two or more memory modules together so that they do not touch each other. Do not stack memory modules directly on top of each other during storage.
  - Never touch the gold memory module connector contacts or allow these contacts to touch the outside of the memory module connector housing.
  - Handle memory modules with care: never bend, twist, or drop a memory module.
  - Do not use any metal tools (such as jigs or clamps) to handle the memory modules, because the rigid metals may damage the memory modules.
  - Do not insert memory modules while holding packages or passive components, which can cause package cracks or detachment of passive components by the high insertion force.

A video for this task is available at:

- Youtube: https://www.youtube.com/playlist?list=PLYV5R7hVcs-DY1RaWHYM4xDloAwuBQHR0
- Youku: http://list.youku.com/albumlist/show/id_52339628

Procedure

Step 1. Touch the static-protective package that contains the memory module to any unpainted surface on the outside of the server. Then, take the memory module out of the package and place it on a static-protective surface.

Step 2. Locate the required memory module slot on the system board.

Note: Ensure that you observe the installation rules and sequence in Memory module installation rules.

Step 3. Install the memory module into the slot.

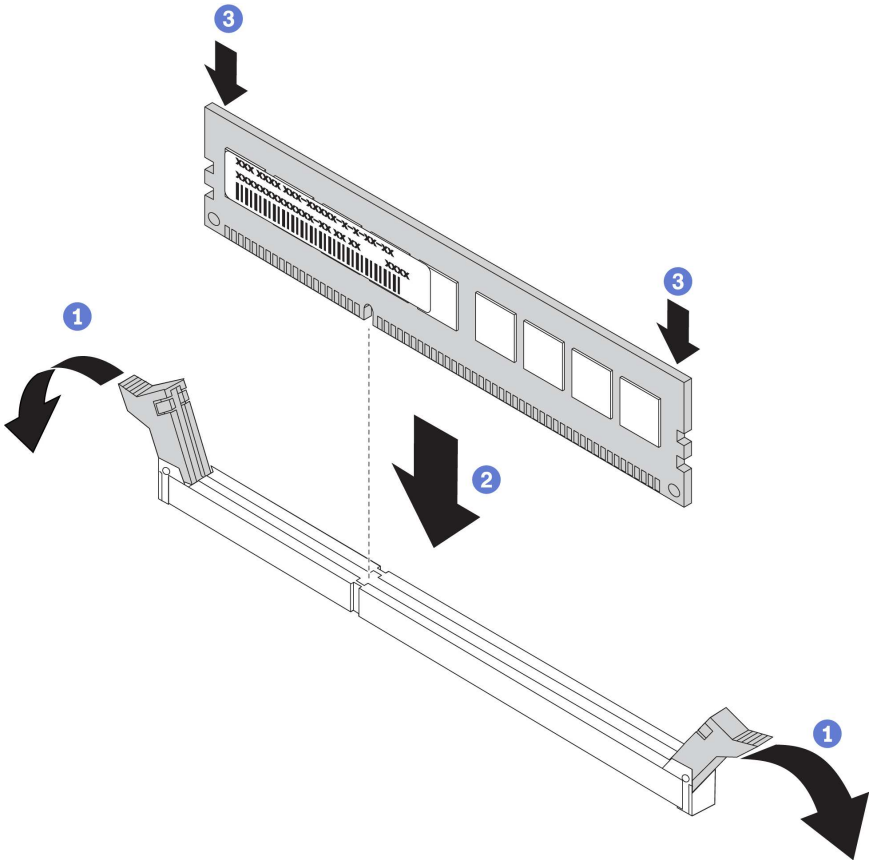

Figure 76. Memory module installation

a. Open the retaining clip on each end of the memory module slot.

   Attention: To avoid breaking the retaining clips or damaging the memory module slots, open and close the clips gently.

b. Align the memory module with the slot, and gently place the memory module on the slot with both hands.

c. Firmly press both ends of the memory module straight down into the slot until the retaining clips snap into the locked position.

   Note: If there is a gap between the memory module and the retaining clips, the memory module has not been correctly inserted. In this case, open the retaining clips, remove the memory module, and then reinsert it.

After you finish

Complete the parts replacement. See Complete the parts replacement.

M.2 adapter and M.2 drive replacement

Use this information to remove and install the M.2 adapter and M.2 drive (an assembled M.2 adapter and M.2 drive is also known as M.2 module).

Remove the M.2 adapter and M.2 drive

Use this information to remove the M.2 adapter and M.2 drive.

About this task

Attention:

- Read Installation Guidelines to ensure that you work safely.
- Power off the server and disconnect all power cords for this task.
- Prevent exposure to static electricity, which might lead to system halt and loss of data, by keeping static-sensitive components in their static-protective packages until installation, and handling these devices with an electrostatic-discharge wrist strap or other grounding system.

A video for this task is available at:

- Youtube: https://www.youtube.com/playlist?list=PLYV5R7hVcs-DY1RaWHYM4xDloAwuBQHR0
- Youku: http://list.youku.com/albumlist/show/id_52339628

Procedure

Step 1. Remove the top cover. See Remove the top cover.

Step 2. Remove the M.2 drive from the M.2 adapter.

Note: The M.2 adapter you want to remove might be different from the following illustrations, but the removal method is the same.

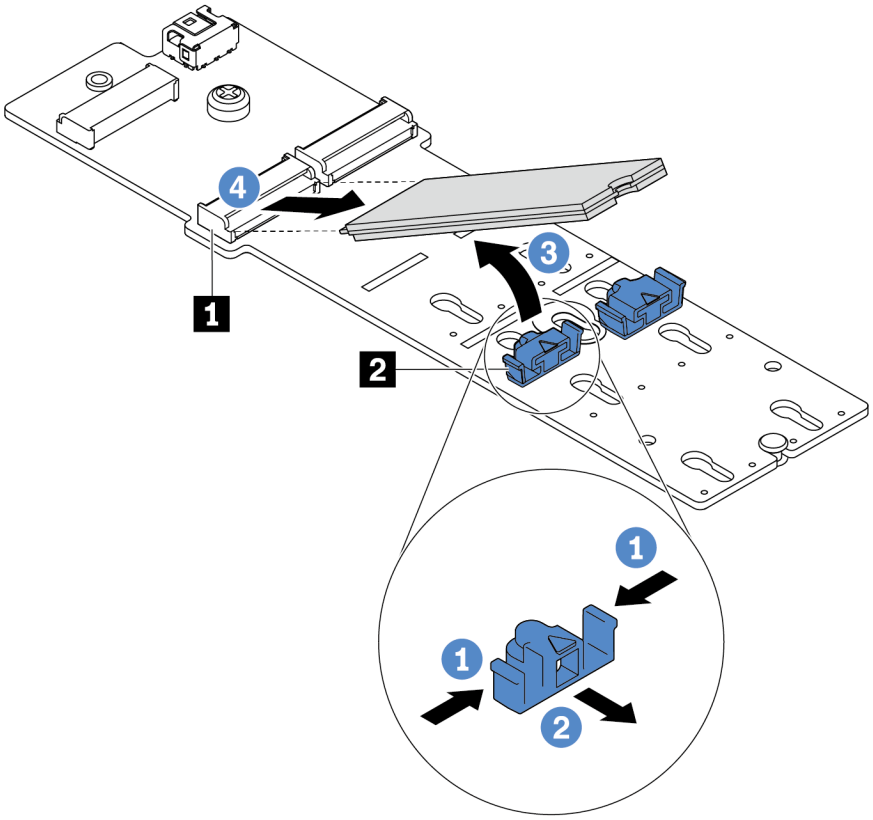

Figure 77. M.2 drive removal

a. Press both sides of the retainer **2**.
b. Slide the retainer backward to loosen the M.2 drive from the M.2 adapter.
c. Rotate the M.2 drive away from the M.2 adapter.
d. Pull the M.2 drive away from the connector **1** at an angle of approximately 30 degrees.

Step 3. Remove the M.2 module from the chassis.

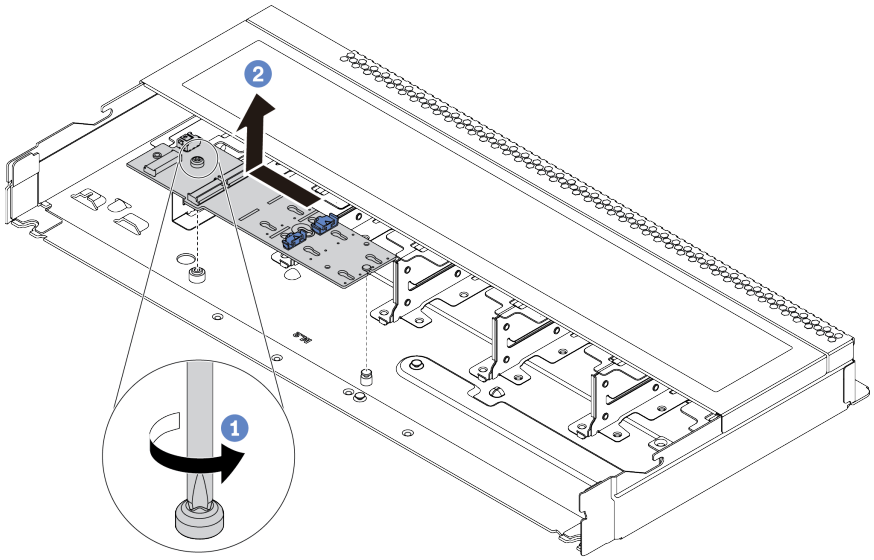

Figure 78. M.2 module removal

a. Loosen the screw.
b. Release the M.2 adapter from the pin and carefully lift the M.2 adapter out from the chassis.

Step 4. Disconnect all M.2 cables from the system board.

After you finish

If you are instructed to return the old M.2 adapter or M.2 drive, follow all packaging instructions and use any packaging materials that are provided.

Adjust the retainer on the M.2 adapter

Use this information to adjust the retainer on the M.2 adapter.

About this task

Attention:

- Read Installation Guidelines to ensure that you work safely.
- Power off the server and disconnect all power cords for this task.
- Prevent exposure to static electricity, which might lead to system halt and loss of data, by keeping static-sensitive components in their static-protective packages until installation, and handling these devices with an electrostatic-discharge wrist strap or other grounding system.

A video for this task is available at:

- Youtube: https://www.youtube.com/playlist?list=PLYV5R7hVcs-DY1RaWHYM4xDloAwuBQHR0
- Youku: http://list.youku.com/albumlist/show/id_52339628

Procedure

Note: The M.2 adapter you want to adjust might be different from the following illustrations, but the adjustment method is the same.

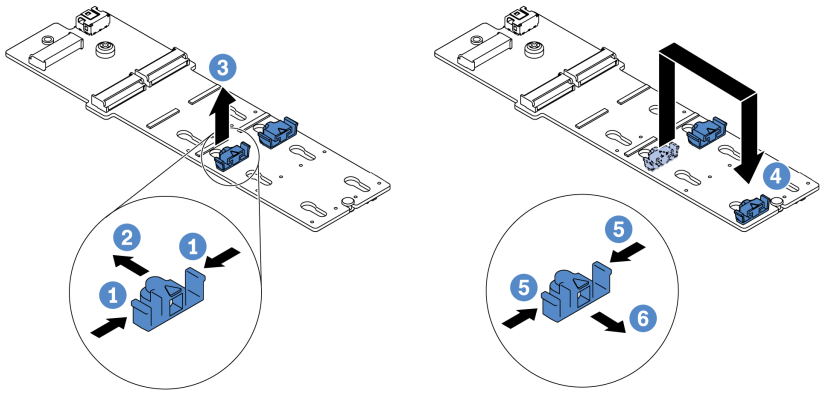

Figure 79. M.2 retainer adjustment

Step 1. Press both sides of the retainers.

Step 2. Move the retainer forward until it is in the large opening of the keyhole.

Step 3. Take the retainer out of the keyhole.

Step 4. Insert the retainer into the correct keyhole into which the retainer should be installed to accommodate the particular size of the M.2 drive you wish to install.

Step 5. Press both sides of the retainer.

Step 6. Slide the retainer backwards until it is seated in place.

Install the M.2 adapter and M.2 drive

Use this information to install the M.2 adapter and M.2 drive.

About this task

Attention:

- Read Installation Guidelines to ensure that you work safely.
- Power off the server and disconnect all power cords for this task.
- Prevent exposure to static electricity, which might lead to system halt and loss of data, by keeping static-sensitive components in their static-protective packages until installation, and handling these devices with an electrostatic-discharge wrist strap or other grounding system.

A video for this task is available at:

- Youtube: https://www.youtube.com/playlist?list=PLYV5R7hVcs-DY1RaWHYM4xDloAwuBQHR0
- Youku: http://list.youku.com/albumlist/show/id_52339628

Procedure

Step 1. Touch the static-protective package that contains the M.2 adapter and M.2 drive to any unpainted surface on the outside of the server. Then, take the M.2 adapter and M.2 drive out of the package and place them on a static-protective surface.

Notes:

- The M.2 adapter module is shipped with a loose screw, but the screw is not necessarily used for the installation.
- The M.2 adapter you want to install might be different from the following illustrations, but the installation method is the same.

Step 2. Adjust the retainer on the M.2 adapter to accommodate the particular size of the M.2 drive you wish to install. See Adjust the retainer on the M.2 adapter.

Step 3. Locate the M.2 drive slot on the M.2 adapter.

Note: For some M.2 adapters that support two identical M.2 drives, install the M.2 drive in slot 0 first.

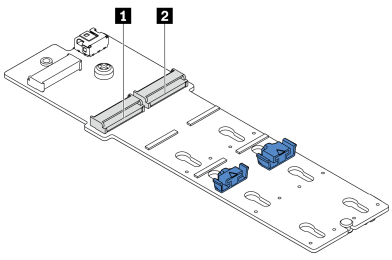

1 Slot 0
2 Slot 1

Figure 80. M.2 drive slot

Step 4. Install the M.2 adapter onto the chassis.

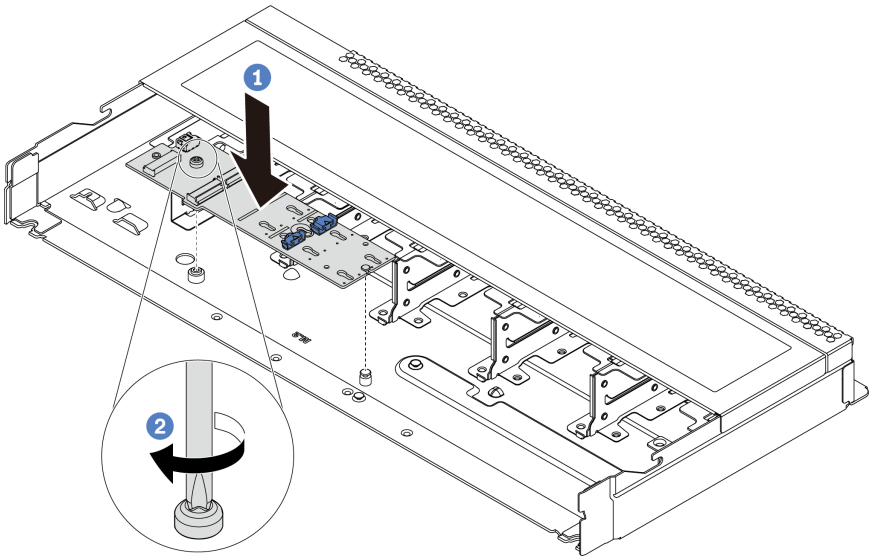

Figure 81. M.2 adapter installation

a. Align the notch of the M.2 adapter with the pin on the chassis, and then place down the M.2 adapter.

b. Tighten the screw to secure the M.2 adapter.

Step 5. Install the M.2 drive on the M.2 adapter.

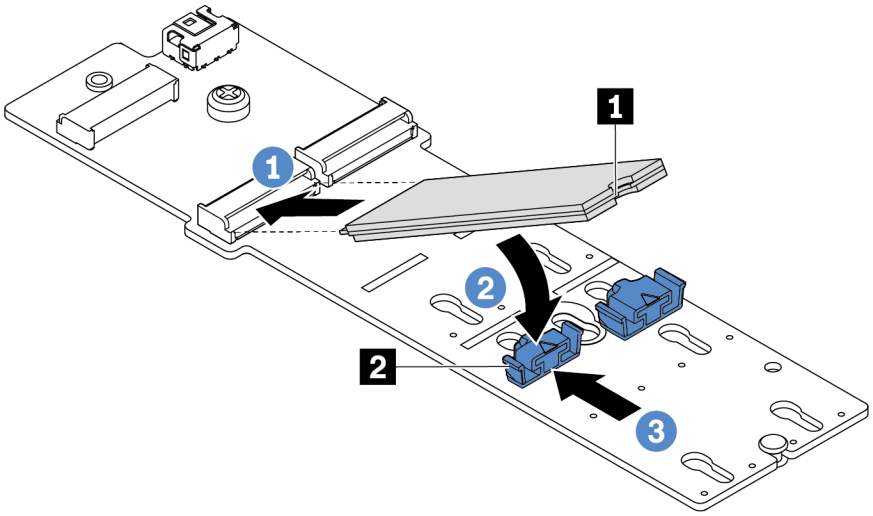

Figure 82. M.2 drive installation

a. Insert the M.2 drive at an angle of approximately 30 degrees into the connector.

b. Rotate the M.2 drive down until the notch 1 catches on the lip of the retainer 2.

c. Slide the retainer forward (toward the connector) to secure the M.2 drive into place.

Step 6. Connect the M.2 cables to the system board. You can refer to the Internal cable routing and locate the cable routing information for your configuration options.

After you finish

1. Complete the parts replacement. See Complete the parts replacement.
2. Use the Lenovo XClarity Provisioning Manager V3 to configure the RAID. For more information, see: https://sysmgt.lenovofiles.com/help/topic/LXPMv3/LXPMv3_introduction.html

OCP 3.0 Ethernet adapter replacement

Use this information to remove and install the OCP 3.0 Ethernet adapter.

Note: The OCP 3.0 Ethernet adapter is available only on some models.

Remove the OCP 3.0 Ethernet adapter

Use this information to remove the OCP 3.0 Ethernet adapter.

About this task

Attention:

- Read Installation Guidelines to ensure that you work safely.
- Power off the server and disconnect all power cords for this task.
- Prevent exposure to static electricity, which might lead to system halt and loss of data, by keeping static-sensitive components in their static-protective packages until installation, and handling these devices with an electrostatic-discharge wrist strap or other grounding system.

A video for this task is available at:

- Youtube: https://www.youtube.com/playlist?list=PLYV5R7hVcs-DY1RaWHYM4xDloAwuBQHR0
- Youku: http://list.youku.com/albumlist/show/id_52339628

Procedure

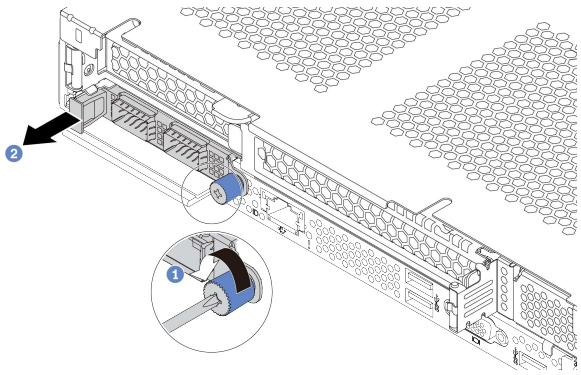

Figure 83. OCP 3.0 Ethernet adapter removal

Step 1. Loosen the thumbscrew that secures the adapter.

Step 2. Pull out the OCP 3.0 Ethernet adapter by its handle on the left as shown.

After you finish

Install a new OCP 3.0 Ethernet adapter or a card filler. See Install the OCP 3.0 Ethernet adapter.

Install the OCP 3.0 Ethernet adapter

Use this information to install the OCP 3.0 Ethernet adapter.

About this task

Attention:

- Read Installation Guidelines to ensure that you work safely.
- Power off the server and disconnect all power cords for this task.
- Prevent exposure to static electricity, which might lead to system halt and loss of data, by keeping static-sensitive components in their static-protective packages until installation, and handling these devices with an electrostatic-discharge wrist strap or other grounding system.

A video for this task is available at:

- Youtube: https://www.youtube.com/playlist?list=PLYV5R7hVcs-DY1RaWHYM4xDloAwuBQHR0
- Youku: http://list.youku.com/albumlist/show/id_52339628

Procedure

Step 1. Touch the static-protective package that contains the OCP 3.0 Ethernet adapter to any unpainted surface on the outside of the server. Then, take the OCP 3.0 Ethernet adapter out of the package and place it on a static-protective surface.

Step 2. Attach the OCP 3.0 Ethernet adapter label that comes with this option on the rear of the server.

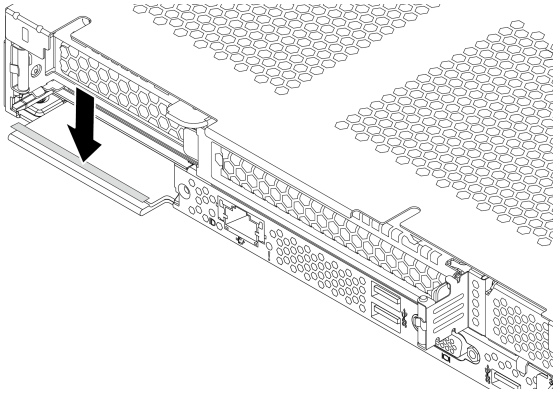

Figure 84. OCP 3.0 Ethernet adapter label installation

Step 3. Install the OCP 3.0 Ethernet adapter.

Notes:

- Ensure that the Ethernet adapter is fully seated and the thumbscrew is securely tightened. Otherwise, the OCP 3.0 Ethernet adapter will not get full connection and may not function.
- If there is an OCP 3.0 Ethernet adapter installed, when the system is powered off but still plugged in to AC power, system fans will continue to spin at a much lower speed. This is the system design to provide proper cooling for the OCP 3.0 Ethernet adapter.

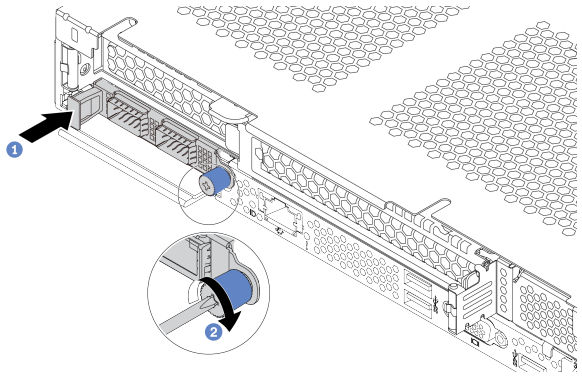

Figure 85. OCP 3.0 Ethernet adapter installation

a. Push the OCP 3.0 Ethernet adapter by its handle on the left until it is fully inserted into the connector on the system board.
b. Fully tighten the thumbscrew to secure the adapter.

After you finish

Complete the parts replacement. See Complete the parts replacement.

PCIe adapter replacement

Use this information to remove and install a PCIe adapter.

The PCIe adapter can be an Ethernet adapter, a host bus adapter (HBA), a PCIe RAID adapter, a PCIe interposer adapter, a PCIe solid-state drive, a PCIe GPU, and any other supported PCIe adapter.

Notes:

- Depending on the specific type, the PCIe adapter might look different from the illustrations in this topic.
- Use any documentation that comes with the PCIe adapter and follow those instructions in addition to the instructions in this topic.

Remove a PCIe adapter

Use this information to remove a PCIe adapter.

About this task

Attention:

- Read Installation Guidelines to ensure that you work safely.
- Power off the server and disconnect all power cords for this task.
- Prevent exposure to static electricity, which might lead to system halt and loss of data, by keeping static-sensitive components in their static-protective packages until installation, and handling these devices with an electrostatic-discharge wrist strap or other grounding system.

A video for this task is available at:

- Youtube: https://www.youtube.com/playlist?list=PLYV5R7hVcs-DY1RaWHYM4xDloAwuBQHR0
- Youku: http://list.youku.com/albumlist/show/id_52339628

Procedure

Step 1. Remove the top cover. See Remove the top cover.

Step 2. Remove the riser assembly. See Remove a riser card.

Step 3. Remove the PCIe adapter from the riser assembly.

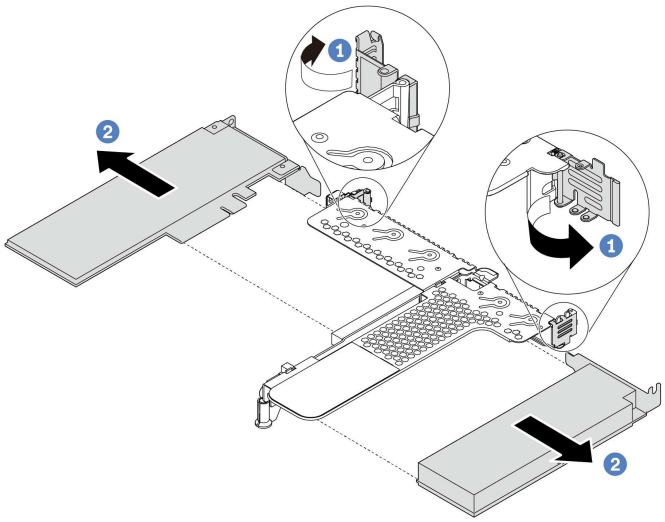

Figure 86. PCIe adapter removal from the LP-FH riser assembly

a. Rotate the latch on the riser bracket to the open position.

b. Grasp the PCIe adapter by its edges and carefully pull it out of the PCIe adapter slot on the riser card.

Note: The procedure for removing a PCIe adapter is similar for different types of riser assembly. In this topic, the LP-FH riser assembly is used as an example.

After you finish

1. Install a PCIe adapter or PCIe adapter filler. See Install a PCIe adapter.
2. If you are instructed to return the old PCIe adapter, follow all packaging instructions and use any packaging materials that are provided.

Install a PCIe adapter

Use this information to install a PCIe adapter.

About this task

Attention:

- Read Installation Guidelines to ensure that you work safely.
- Power off the server and disconnect all power cords for this task.
- Prevent exposure to static electricity, which might lead to system halt and loss of data, by keeping static-sensitive components in their static-protective packages until installation, and handling these devices with an electrostatic-discharge wrist strap or other grounding system.

A video for this task is available at:

- Youtube: https://www.youtube.com/playlist?list=PLYV5R7hVcs-DY1RaWHYM4xDloAwuBQHR0
- Youku: http://list.youku.com/albumlist/show/id_52339628

Procedure

Step 1. Touch the static-protective package that contains the PCIe adapter to any unpainted surface on the outside of the server. Then, take the PCIe adapter out of the package and place it on a static-protective surface.

Step 2. Locate the correct PCIe slot for the PCIe adapter. For information about the PCIe slots and supported PCIe adapters, see Rear view.

Step 3. Install the PCIe adapter and secure it to the riser assembly.

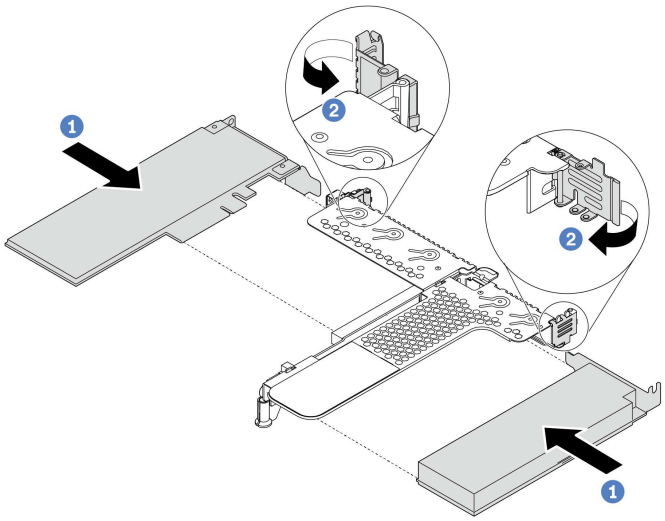

Figure 87. PCIe adapter installation into the LP-FH riser assembly

a. Align the PCIe adapter with the PCIe slot on the riser card. Then, carefully press the PCIe adapter straight into the slot until it is securely seated and its bracket also is secured.

b. Rotate the latch on the riser bracket to the closed position.

Notes:

1. Ensure that PCIe adapter installation meets Technical rules for PCIe adapters.
2. The procedure for installing a PCIe adapter is similar for different types of riser assembly. In this topic, the LP-FH riser assembly is used as an example.

Step 4. Connect the cables to the PCIe adapter in the riser assembly. You can refer to the Internal cable routing and locate the cable routing information for your configuration options.

After you finish

1. Reinstall the riser assembly. See Install a riser card.
2. Complete the parts replacement. See Complete the parts replacement.

Processor and heat sink replacement

Use this information to remove and install a processor and heat sink assembly.

- Remove a standard heat sink
- Remove a T-shaped heat sink
- Remove a processor
- Install a processor
- Install a standard heat sink
- Install a T-shaped heat sink

Remove a standard heat sink

Use this information to remove a standard heat sink.

About this task

Attention:

- Read Installation Guidelines to ensure that you work safely.
- Power off the server and disconnect all power cords for this task.
- Prevent exposure to static electricity, which might lead to system halt and loss of data, by keeping static-sensitive components in their static-protective packages until installation, and handling these devices with an electrostatic-discharge wrist strap or other grounding system.

Notes:

- It may take some time for the heat sink to cool down after the system has been powered down.
- The heat sink is necessary to maintain proper thermal conditions for the processor. Do not power on the server with the heat sink removed.

A video for this task is available at:

- Youtube: https://www.youtube.com/playlist?list=PLYV5R7hVcs-DY1RaWHYM4xDloAwuBQHR0
- Youku: http://list.youku.com/albumlist/show/id_52339628

Procedure

Step 1. Remove the top cover. See Remove the top cover.

Step 2. Remove the air baffle. See Remove the air baffle.

Step 3. Remove any parts and disconnect any cables that might impede your access to the heat sink and processor.

Step 4. Remove the heat sink.

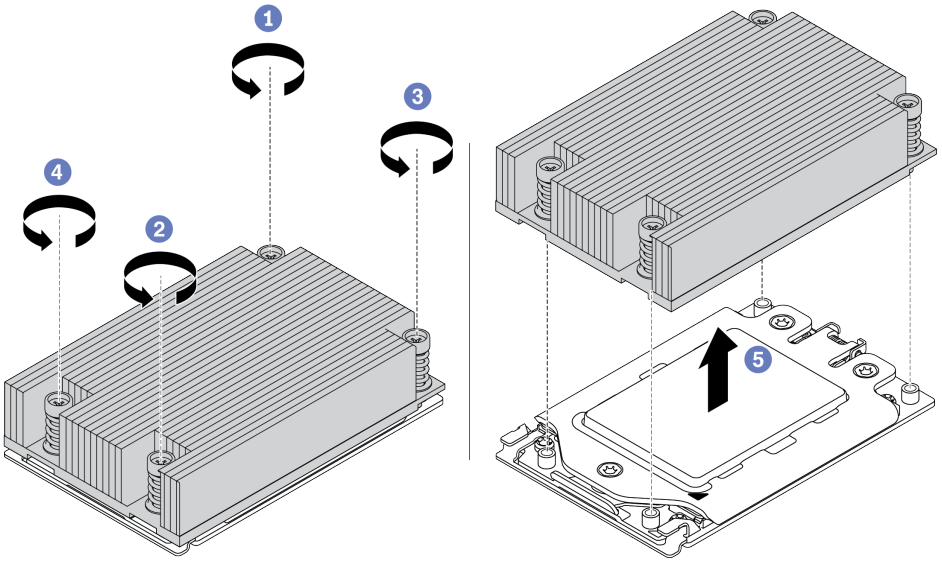

Figure 88. Heat sink removal

a. Use a Torx #T20 screwdriver to loosen all the captive screws in the *removal sequence* shown on the heat-sink label. After loosening each captive screw, wait for several seconds for the heat sink to loosen from the processor.

b. Slightly lift the heat sink away from the system.

After you finish

- If you are replacing a heat sink, install a new heat sink. See Install a standard heat sink.
- If you are replacing a processor, remove the processor. See Remove a processor.

Remove a T-shaped heat sink

Use this information to remove a T-shaped heat sink.

About this task

Attention:

- Read Installation Guidelines to ensure that you work safely.
- Power off the server and disconnect all power cords for this task.
- Prevent exposure to static electricity, which might lead to system halt and loss of data, by keeping static-sensitive components in their static-protective packages until installation, and handling these devices with an electrostatic-discharge wrist strap or other grounding system.

Notes:

- It may take some time for the heat sink to cool down after the system has been powered down.
- The heat sink is necessary to maintain proper thermal conditions for the processor. Do not power on the server with the heat sink removed.

A video for this task is available at:

- Youtube: https://www.youtube.com/playlist?list=PLYV5R7hVcs-DY1RaWHYM4xDloAwuBQHR0
- Youku: http://list.youku.com/albumlist/show/id_52339628

Procedure

Step 1. Remove the top cover. See Remove the top cover.

Step 2. Remove the air baffle. See Remove the air baffle.

Step 3. Remove any parts and disconnect any cables that might impede your access to the heat sink and processor.

Step 4. Remove the heat sink.

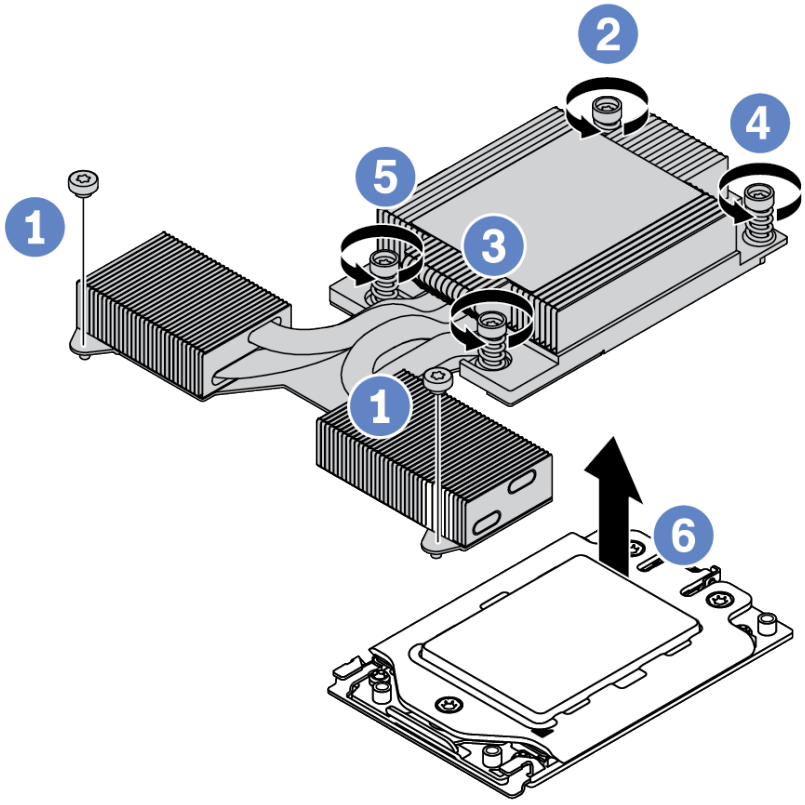

Figure 89. Heat sink removal

a. Loosen the two screws in the front of the T-shaped heat sink.
b. Use a Torx #T20 screwdriver to loosen all the captive screws in the *removal sequence* shown on the heat-sink label. After loosening each captive screw, wait for several seconds for the heat sink to loosen from the processor.
c. Slightly lift the heat sink away from the system.

After you finish

- If you are replacing a heat sink, install a new heat sink. See Install a T-shaped heat sink.
- If you are replacing a processor, remove the processor. See Remove a processor.

Remove a processor

Use this information to remove a processor.

About this task

Attention:

- Read Installation Guidelines to ensure that you work safely.
- Power off the server and disconnect all power cords for this task.
- Prevent exposure to static electricity, which might lead to system halt and loss of data, by keeping static-sensitive components in their static-protective packages until installation, and handling these devices with an electrostatic-discharge wrist strap or other grounding system.

A video for this task is available at:

- Youtube: https://www.youtube.com/playlist?list=PLYV5R7hVcs-DY1RaWHYM4xDloAwuBQHR0
- Youku: http://list.youku.com/albumlist/show/id_52339628

Procedure

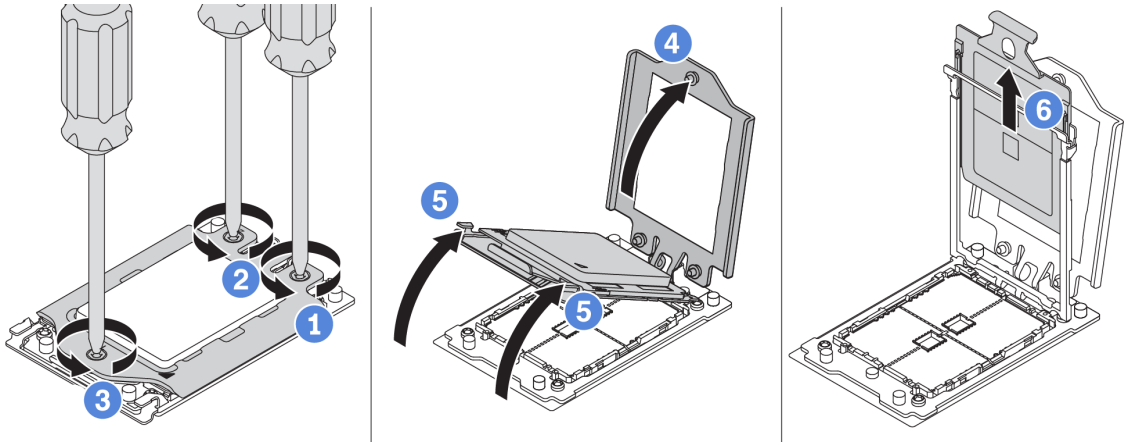

Figure 90. Processor removal

Step 1. Use a Torx #T20 screwdriver to loosen the captive screws in the *removal sequence* shown on the force frame.

Step 2. Slightly lift up the force frame and the rail frame in the direction shown. The processor in the rail frame is spring-loaded.

Step 3. Hold the blue tab of the processor carrier and slide the processor carrier out of the rail frame.

After you finish

Install a new processor. See Install a processor.

Install a processor

Use this information to install a processor.

About this task

Attention:

- Read Installation Guidelines to ensure that you work safely.
- Power off the server and disconnect all power cords for this task.
- Prevent exposure to static electricity, which might lead to system halt and loss of data, by keeping static-sensitive components in their static-protective packages until installation, and handling these devices with an electrostatic-discharge wrist strap or other grounding system.

A video for this task is available at:

- Youtube: https://www.youtube.com/playlist?list=PLYV5R7hVcs-DY1RaWHYM4xDloAwuBQHR0
- Youku: http://list.youku.com/albumlist/show/id_52339628

Notes:

- See https://static.lenovo.com/us/en/serverproven/index.shtml for a list of processors supported for your server. All processors on the system board must have the same speed, number of cores, and frequency.
- Before you install a new processor, update your system firmware to the latest level. See Firmware updates.
- Optional devices available for your system might have specific processor requirements. See Technical rules.

Procedure

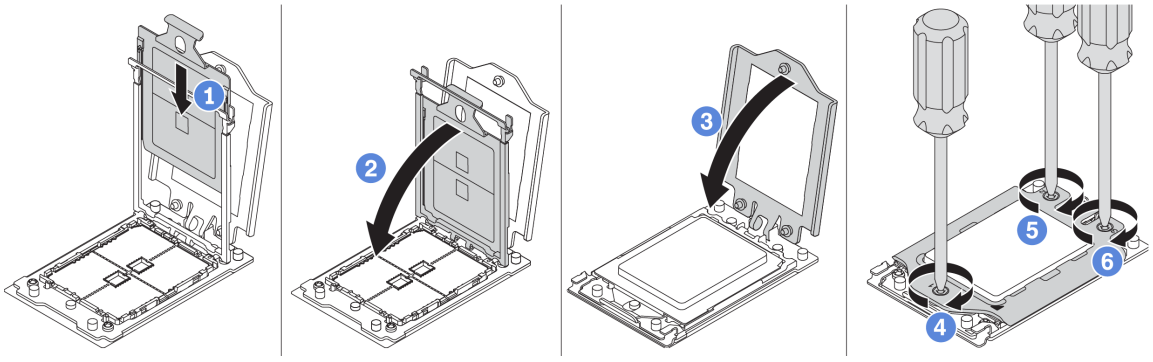

Figure 91. Processor installation

Step 1. Slide the processor carrier into the rail frame.

Step 2. Push the rail frame down until the blue latches lock into place.

Step 3. Close the force frame.

Step 4. Tighten the screws in the *installation sequence* shown on the force frame.

Note: Use an ESD safe screwdriver and set the maximum torque value to 14.0 ± 0.5 inch-pounds.

After you finish

Install the heat sink. See Install a standard heat sink or Install a T-shaped heat sink.

Install a standard heat sink

Use this information to install a standard heat sink.

About this task

Attention:

- Read Installation Guidelines to ensure that you work safely.
- Power off the server and disconnect all power cords for this task.
- Prevent exposure to static electricity, which might lead to system halt and loss of data, by keeping static-sensitive components in their static-protective packages until installation, and handling these devices with an electrostatic-discharge wrist strap or other grounding system.

Before installing the heat sink:

- If you use the existing heat sink:
  1. Remove the thermal grease on the heat sink by using an alcohol cleaning pad.
  2. Apply new thermal grease (TaiSol TC5288) in a quadrilateral design on the top of the processor.

     Note: Do not apply too much thermal grease. Too much thermal grease can result in excess grease coming in contact with and contaminating the processor socket.

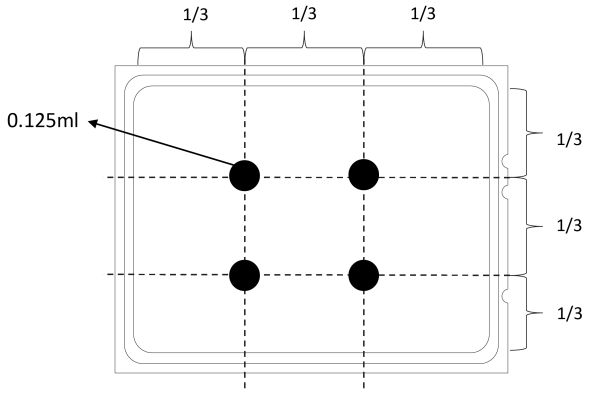

Figure 92. Applying thermal grease

- If you use a new heat sink, the thermal grease is pre-applied to the heat sink. Remove the protective cover and install the heat sink.

A video for this task is available at:

- Youtube: https://www.youtube.com/playlist?list=PLYV5R7hVcs-DY1RaWHYM4xDloAwuBQHR0
- Youku: http://list.youku.com/albumlist/show/id_52339628

Procedure

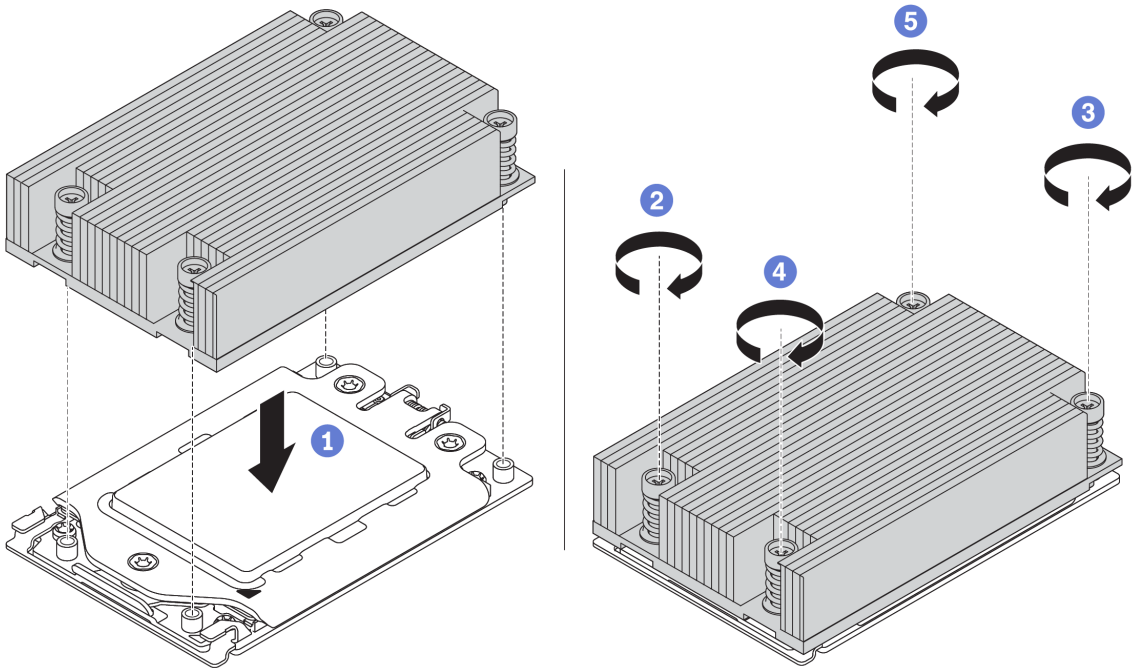

Figure 93. Heat sink installation

Step 1. Orient the heat sink with the screw holes on the processor plate. The captive screws on the heat sink should align with the screw holes on the processor plate.

Step 2. Tighten all the captive screws in the *installation sequence* shown on the heat-sink label.

After you finish

1. Install the air baffle. See Install the air baffle.
2. Install any parts that you have removed.
3. Complete the parts replacement. See Complete the parts replacement.

Install a T-shaped heat sink

Use this information to install a T-shaped heat sink.

About this task

Attention:

- Read Installation Guidelines to ensure that you work safely.
- Power off the server and disconnect all power cords for this task.
- Prevent exposure to static electricity, which might lead to system halt and loss of data, by keeping static-sensitive components in their static-protective packages until installation, and handling these devices with an electrostatic-discharge wrist strap or other grounding system.

Before installing the heat sink:

- If you use the existing heat sink:
  1. Remove the thermal grease on the heat sink by using an alcohol cleaning pad.
  2. Apply new thermal grease (TaiSol TC5288) in a quadrilateral design on the top of the processor.

     Note: Do not apply too much thermal grease. Too much thermal grease can result in excess grease coming in contact with and contaminating the processor socket.

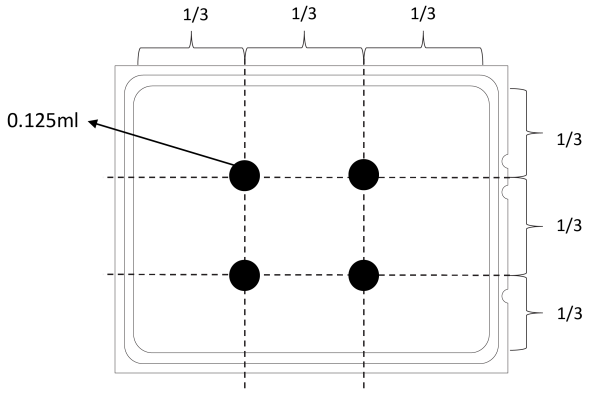

Figure 94. Applying thermal grease

- If you use a new heat sink, the thermal grease is pre-applied to the heat sink. Remove the protective cover and install the heat sink.

A video for this task is available at:

- Youtube: https://www.youtube.com/playlist?list=PLYV5R7hVcs-DY1RaWHYM4xDloAwuBQHR0
- Youku: http://list.youku.com/albumlist/show/id_52339628

Procedure

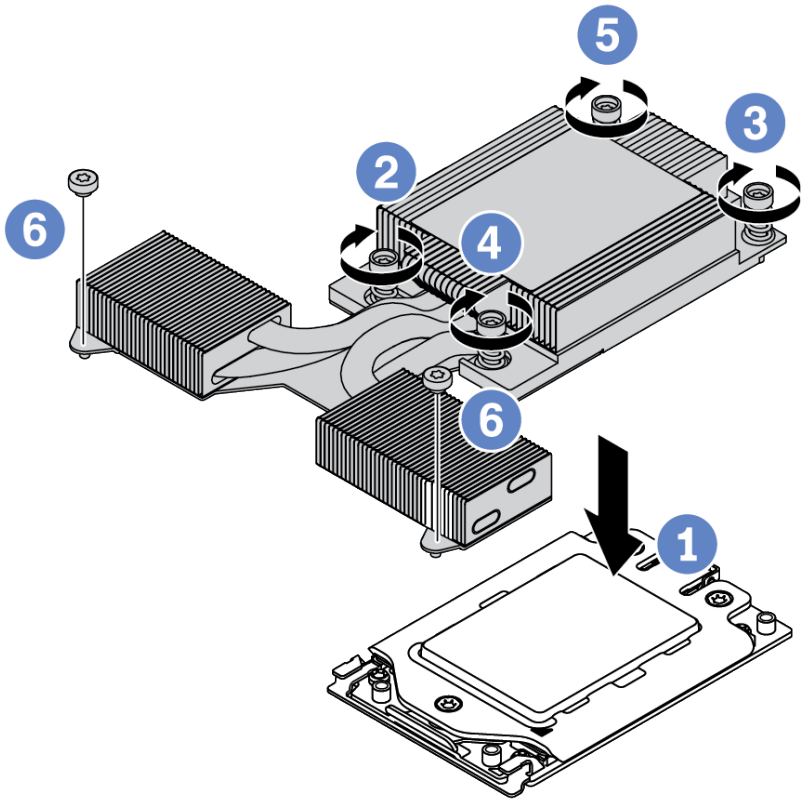

Figure 95. Heat sink installation

Step 1. Orient the heat sink with the screw holes on the processor plate. The captive screws on the heat sink should align with the screw holes on the processor plate.

Step 2. Tighten all the captive screws in the *installation sequence* shown on the heat-sink label.

Step 3. Tighten the two screws located in the front of the T-shaped heat sink.

After you finish

1. Install the air baffle. See Install the air baffle.
2. Install any parts that you have removed.
3. Complete the parts replacement. See Complete the parts replacement.

Rack latches replacement

Use this information to remove and install the rack latches.

Remove the rack latches

Use this information to remove the rack latches.

About this task

Attention: Read Installation Guidelines to ensure that you work safely.

A video for this task is available at:

- Youtube: https://www.youtube.com/playlist?list=PLYV5R7hVcs-DY1RaWHYM4xDloAwuBQHR0
- Youku: http://list.youku.com/albumlist/show/id_52339628

Procedure

Step 1. If the server is installed with the security bezel, remove it first. See Remove the security bezel.

Step 2. Use a flat-blade screwdriver to remove the ID label plate on the right rack latch and place it in a safe place.

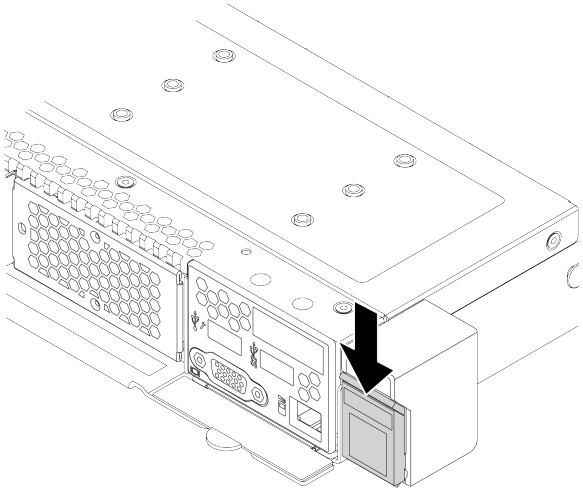

Figure 96. ID label plate removal

Step 3. On each side of the server, remove the two screws that secure the rack latch.

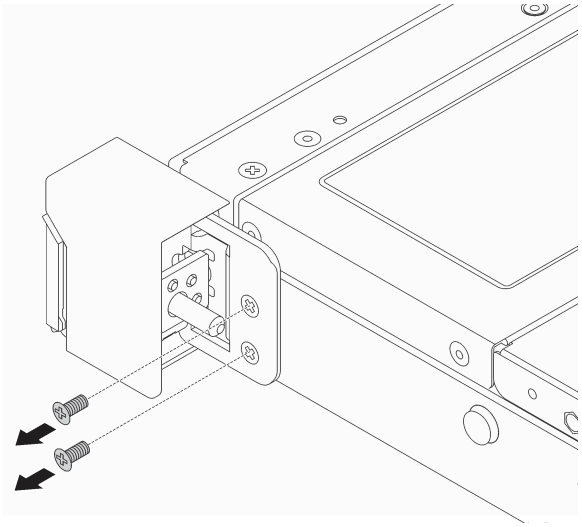

Figure 97. Rack latch screws removal

Step 4. On each side of the server, remove the rack latch from the chassis as shown.

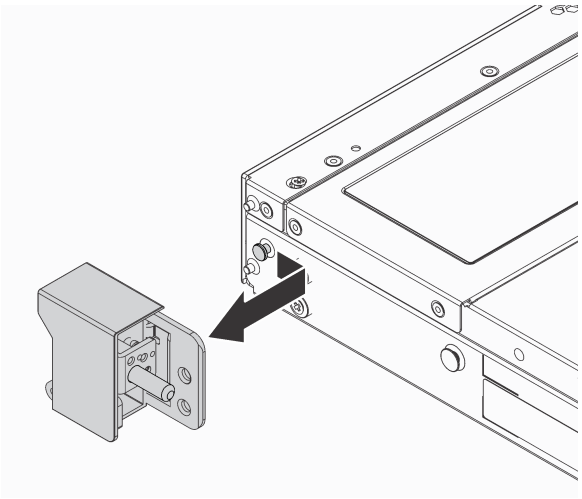

Figure 98. Rack latch removal

After you finish

If you are instructed to return the old rack latches, follow all packaging instructions and use any packaging materials that are provided.

Install the rack latches

Use this information to install the rack latches.

About this task

Attention: Read Installation Guidelines to ensure that you work safely.

A video for this task is available at:

- Youtube: https://www.youtube.com/playlist?list=PLYV5R7hVcs-DY1RaWHYM4xDloAwuBQHR0
- Youku: http://list.youku.com/albumlist/show/id_52339628

Procedure

Step 1. Touch the static-protective package that contains the rack latches to any unpainted surface on the outside of the server. Then, take the rack latches out of the package and place them on a static-protective surface.

Step 2. On each side of the server, align the rack latch with the pin on the chassis. Then, press the rack latch onto the chassis and slightly slide it forward as shown.

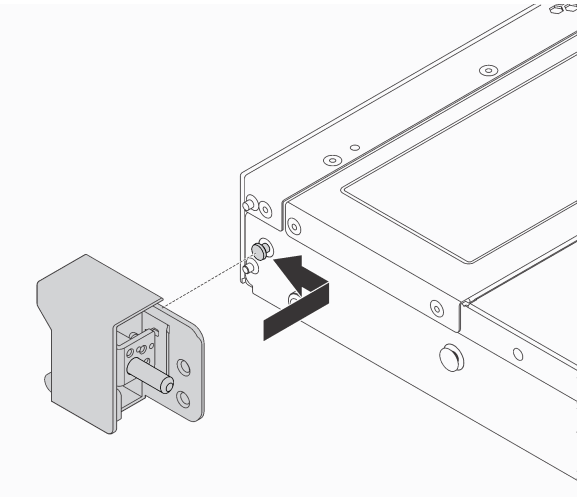

Figure 99. Rack latch installation

Step 3. Install the two screws to secure the rack latch on each side of the server.

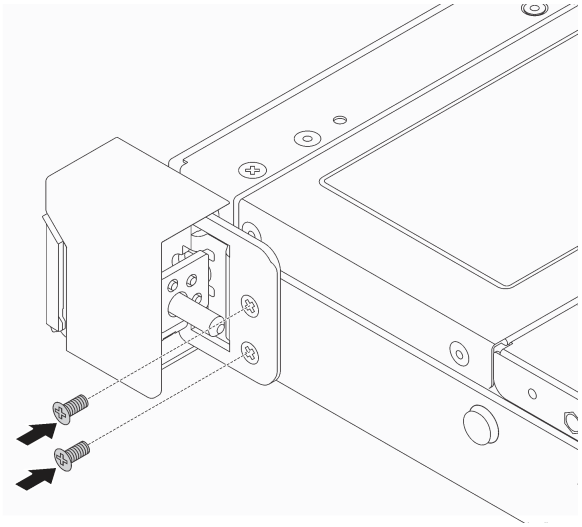

Figure 100. Rack latch screws installation

After you finish

1. Install the ID label plate to the right rack latch as shown.

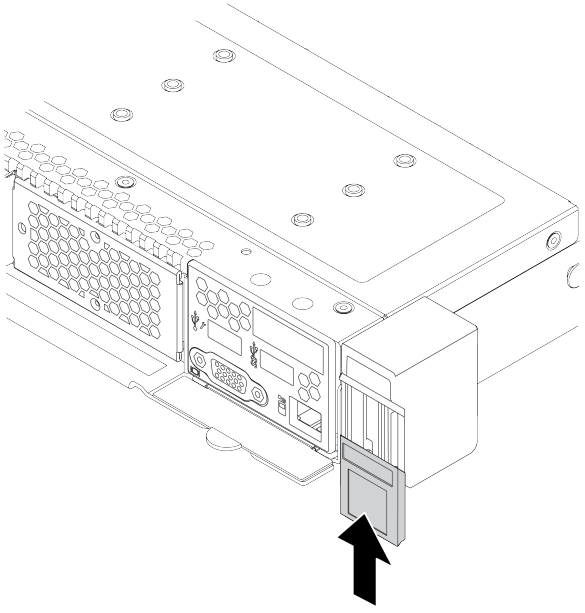

Figure 101. ID label plate installation

2. Complete the parts replacement. See Complete the parts replacement.

RAID super capacitor module replacement

The RAID super capacitor module protects the cache memory on the installed RAID adapter. You can purchase a RAID super capacitor module from Lenovo. Use this information to remove and install a RAID super capacitor module.

For a list of supported options, see:
https://static.lenovo.com/us/en/serverproven/index.shtml

RAID super capacitors can be installed on the chaissis, in the air baffle, or to one riser slot.

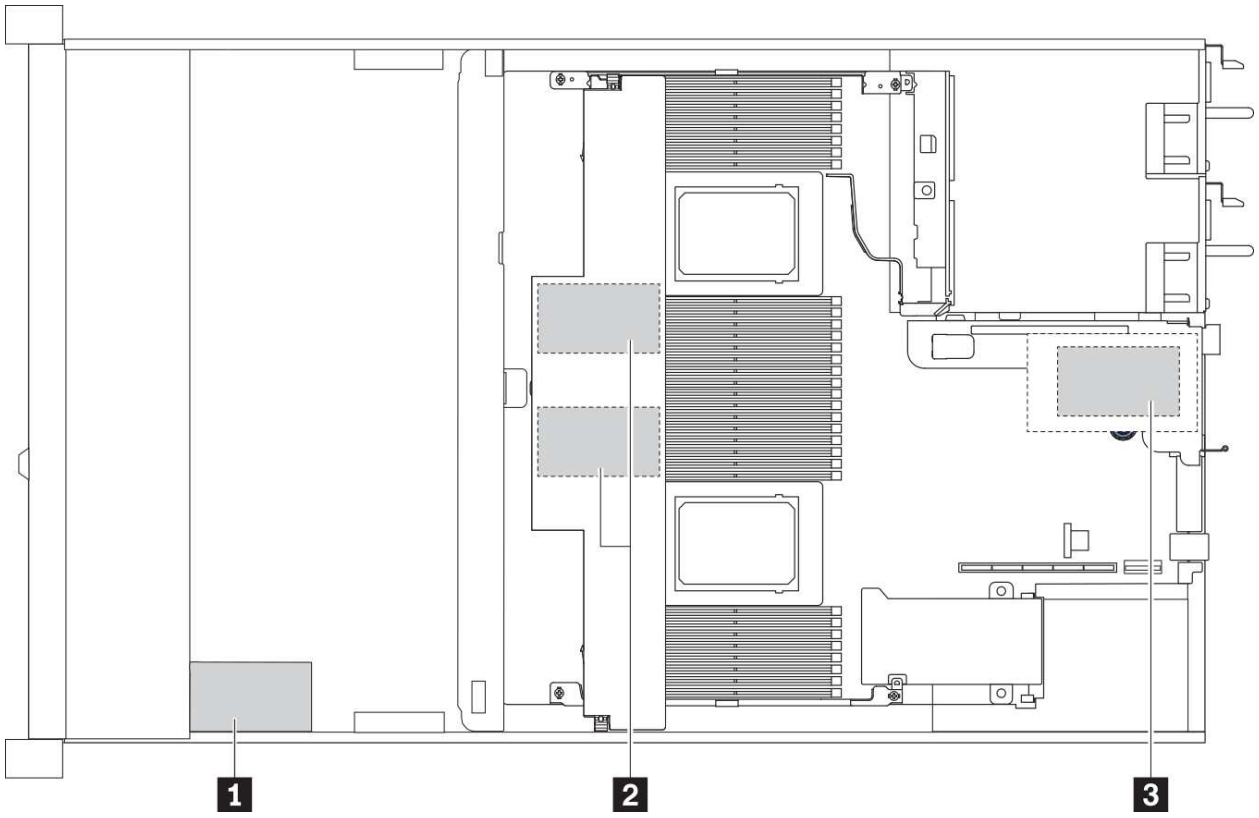

1	Super capacitor on the chassis
2	Super capacitors in the air baffle
3	Super capacitors in the riser 1 slot

Figure 102. RAID super capacitor module location

Remove the RAID super capacitor module on the chassis

Use this information to remove the RAID super capacitor module on the chassis.

About this task

Attention:

- Read Installation Guidelines to ensure that you work safely.
- Power off the server and disconnect all power cords for this task.
- Prevent exposure to static electricity, which might lead to system halt and loss of data, by keeping static-sensitive components in their static-protective packages until installation, and handling these devices with an electrostatic-discharge wrist strap or other grounding system.

A video for this task is available at:

- Youtube: https://www.youtube.com/playlist?list=PLYV5R7hVcs-DY1RaWHYM4xDloAwuBQHR0
- Youku: http://list.youku.com/albumlist/show/id_52339628

Procedure

Step 1. Remove the top cover. See Remove the top cover.

Step 2. Disconnect the cable of the RAID super capacitor module.

Step 3. Remove the RAID super capacitor module on the chassis.

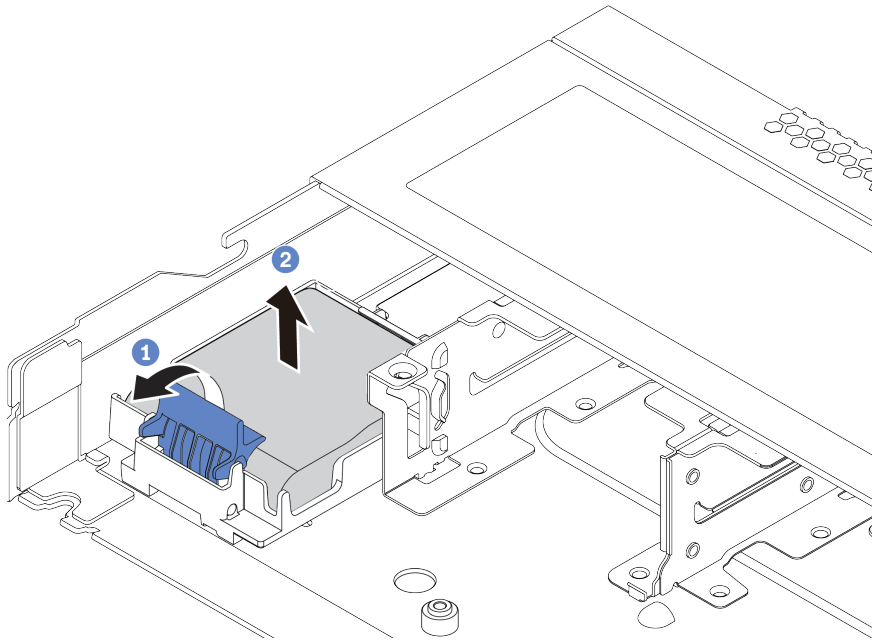

Figure 103. Removal of the RAID super capacitor module on the chassis

a. Open the retention clip on the holder of the RAID super capacitor module.

b. Take the RAID super capacitor module out of the holder.

Step 4. Remove the RAID super capacitor module holder as shown if necessary.

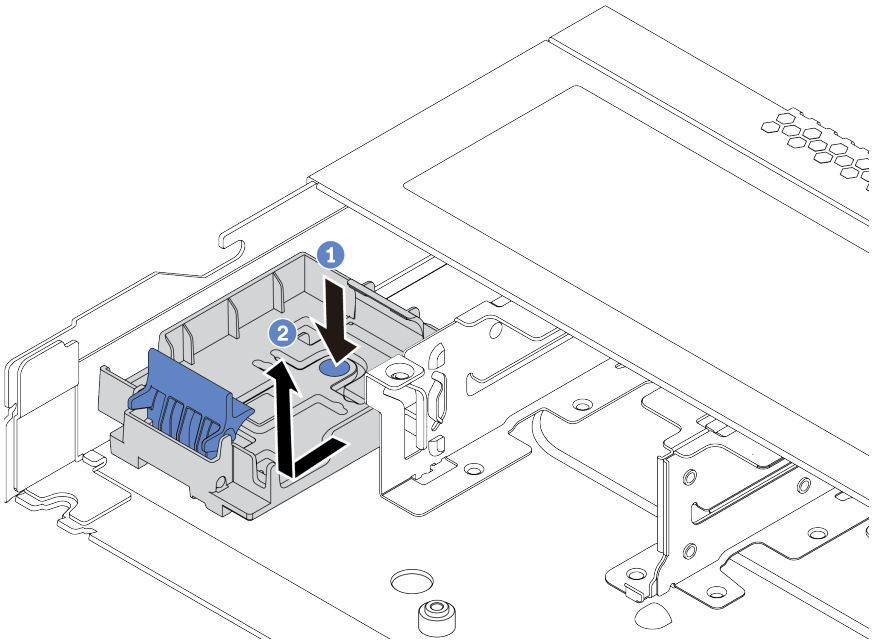

Figure 104. RAID super capacitor module holder removal

After you finish

If you are instructed to return the old RAID super capacitor module, follow all packaging instructions and use any packaging materials that are provided.

Install the RAID super capacitor module on the chassis

Use this information to install the RAID super capacitor module on the chassis.

About this task

Attention:

- Read Installation Guidelines to ensure that you work safely.
- Power off the server and disconnect all power cords for this task.
- Prevent exposure to static electricity, which might lead to system halt and loss of data, by keeping static-sensitive components in their static-protective packages until installation, and handling these devices with an electrostatic-discharge wrist strap or other grounding system.

A video for this task is available at:

- Youtube: https://www.youtube.com/playlist?list=PLYV5R7hVcs-DY1RaWHYM4xDloAwuBQHR0
- Youku: http://list.youku.com/albumlist/show/id_52339628

Procedure

Step 1. Touch the static-protective package that contains the RAID super capacitor module to any unpainted surface on the outside of the server. Then, take the RAID super capacitor module out of the package and place it on a static-protective surface.

Step 2. If the server comes with a tray that covers the place of the RAID super capacitor module on the chassis, remove it first.

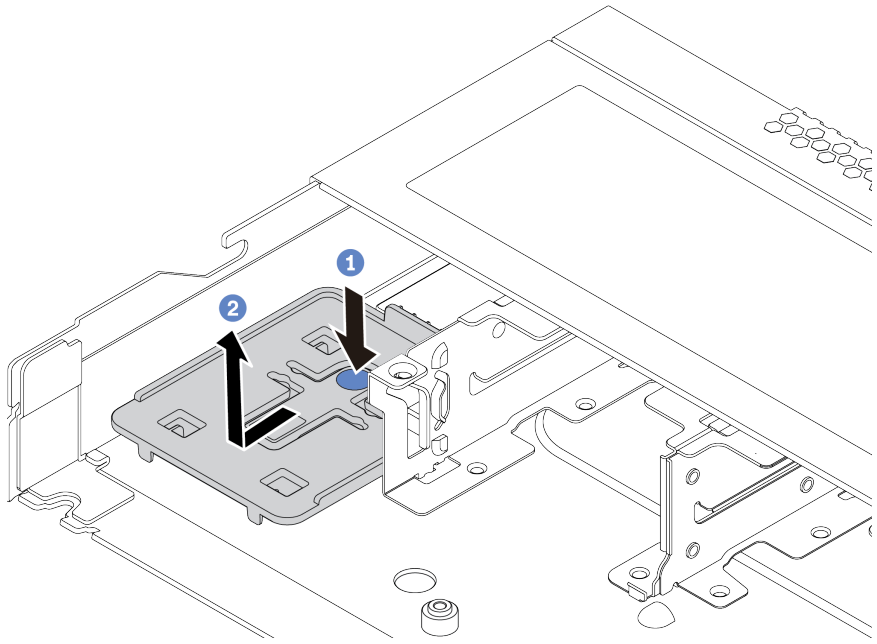

Figure 105. Tray removal

Step 3. If the server does not have a RAID super capacitor module holder on the chassis, install one first.

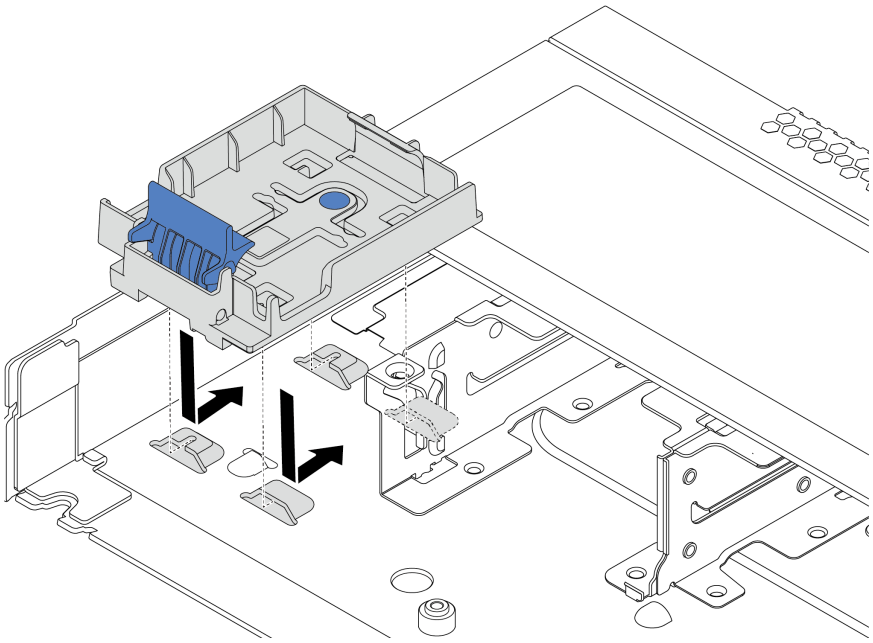

Figure 106. RAID super capacitor module holder installation

Step 4. Install the RAID super capacitor module on the chassis.

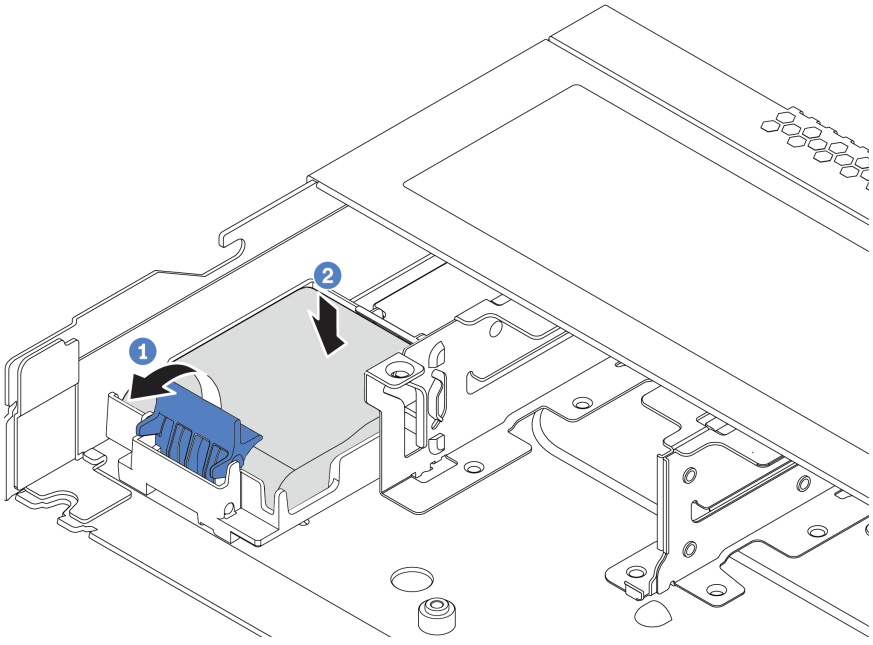

Figure 107. Installation of the RAID super capacitor module on the chassis

a. Open the retention clip on the holder.

b. Put the RAID super capacitor module into the holder and press it down to secure it into the holder.

After you finish

1. Connect the super capacitor module to an adapter with the extension cable that comes with the super capacitor module. For detailed cable routing information, see Internal cable routing.
2. Complete the parts replacement. See Complete the parts replacement.

Remove the RAID super capacitor module on the air baffle

Use this information to remove the RAID super capacitor module on the air baffle.

About this task

Attention:

- Read Installation Guidelines to ensure that you work safely.
- Power off the server and disconnect all power cords for this task.
- Prevent exposure to static electricity, which might lead to system halt and loss of data, by keeping static-sensitive components in their static-protective packages until installation, and handling these devices with an electrostatic-discharge wrist strap or other grounding system.

A video for this task is available at:

- Youtube: https://www.youtube.com/playlist?list=PLYV5R7hVcs-DY1RaWHYM4xDloAwuBQHR0
- Youku: http://list.youku.com/albumlist/show/id_52339628

Procedure

Step 1. Remove the top cover. See Remove the top cover.

Step 2. Disconnect the cable of the RAID super capacitor module.

Step 3. Remove the air baffle from the chassis. See Remove the air baffle.

Step 4. Remove the RAID super capacitor module on the air baffle.

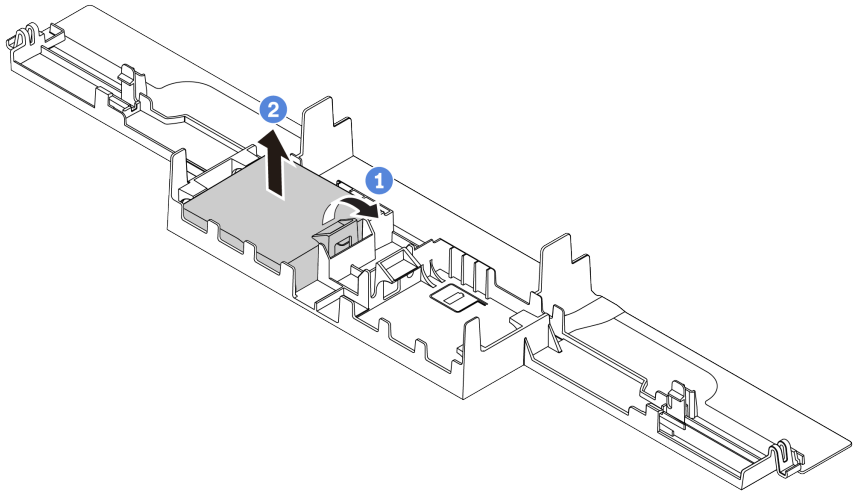

Figure 108. Removal of the RAID super capacitor module on the air baffle

a. Open the retention clip on the holder of the RAID super capacitor module.

b. Take the RAID super capacitor module out of the holder.

After you finish

If you are instructed to return the old RAID super capacitor module, follow all packaging instructions and use any packaging materials that are provided.

Install the RAID super capacitor module on the air baffle

Use this information to install the RAID super capacitor module on the air baffle.

About this task

Attention:

- Read Installation Guidelines to ensure that you work safely.
- Power off the server and disconnect all power cords for this task.
- Prevent exposure to static electricity, which might lead to system halt and loss of data, by keeping static-sensitive components in their static-protective packages until installation, and handling these devices with an electrostatic-discharge wrist strap or other grounding system.

A video for this task is available at:

- Youtube: https://www.youtube.com/playlist?list=PLYV5R7hVcs-DY1RaWHYM4xDloAwuBQHR0
- Youku: http://list.youku.com/albumlist/show/id_52339628

Procedure

Step 1. Touch the static-protective package that contains the RAID super capacitor module to any unpainted surface on the outside of the server. Then, take the RAID super capacitor module out of the package and place it on a static-protective surface.

Step 2. Install the RAID super capacitor module on the air baffle.

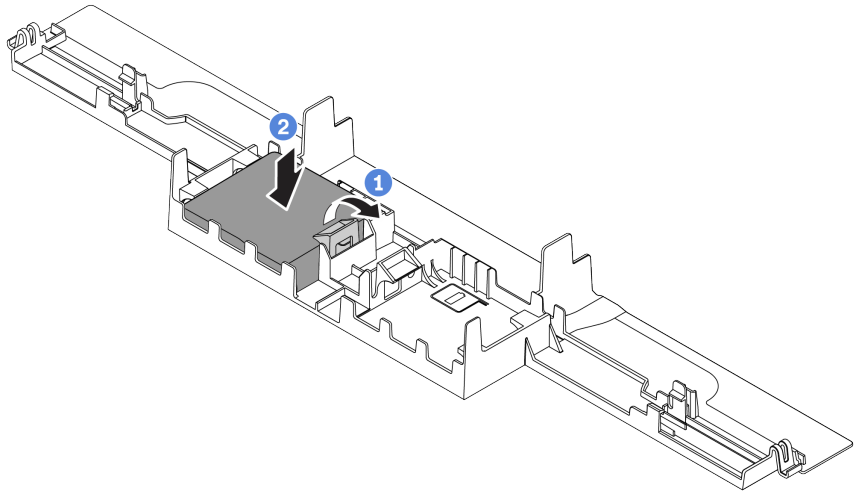

Figure 109. Installation of the RAID super capacitor module on the air baffle

a. Open the retention clip on the holder.

b. Put the RAID super capacitor module into the air baffle and press it down to secure it into the air baffle.

After you finish

1. Install the air baffle on the chassis. See Install the air baffle.
2. Connect the super capacitor module to an adapter with the extension cable that comes with the super capacitor module. For detailed cable routing information, see Internal cable routing.

3. Complete the parts replacement. See Complete the parts replacement.

Remove the RAID super capacitor module on the riser

Use this information to remove the RAID super capacitor module on the riser.

About this task

Attention:

- Read Installation Guidelines to ensure that you work safely.
- Power off the server and disconnect all power cords for this task.
- Prevent exposure to static electricity, which might lead to system halt and loss of data, by keeping static-sensitive components in their static-protective packages until installation, and handling these devices with an electrostatic-discharge wrist strap or other grounding system.

A video for this task is available at:

- Youtube: https://www.youtube.com/playlist?list=PLYV5R7hVcs-DY1RaWHYM4xDloAwuBQHR0
- Youku: http://list.youku.com/albumlist/show/id_52339628

Procedure

Step 1. Remove the top cover. See Remove the top cover.

Step 2. Disconnect the cable of the RAID super capacitor module.

Step 3. Remove the riser assembly. See Remove a riser card.

Step 4. Remove the RAID super capacitor module from the riser.

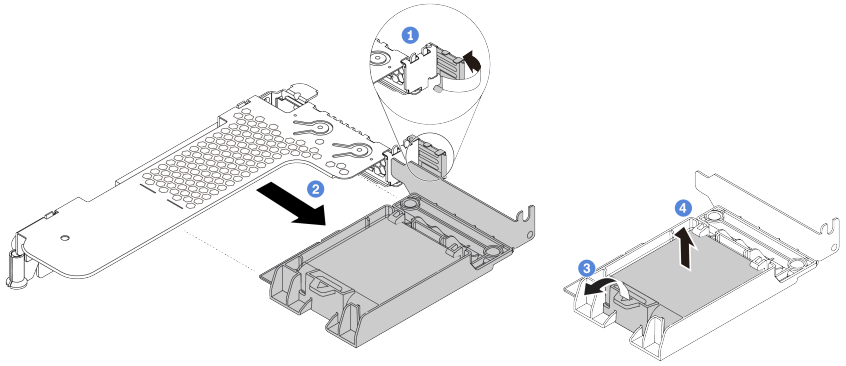

Figure 110. Removal of the RAID super capacitor assembly from the riser

a. Rotate the latch on the riser bracket to the open position.

b. Remove the RAID super capacitor assembly from the riser.

c. Open the retention clip on the holder of the RAID super capacitor module.

d. Take the RAID super capacitor module out of the holder.

After you finish

If you are instructed to return the old RAID super capacitor module, follow all packaging instructions and use any packaging materials that are provided.

Install the RAID super capacitor module on the riser

Use this information to install the RAID super capacitor module on the riser.

About this task

Attention:

- Read Installation Guidelines to ensure that you work safely.
- Power off the server and disconnect all power cords for this task.
- Prevent exposure to static electricity, which might lead to system halt and loss of data, by keeping static-sensitive components in their static-protective packages until installation, and handling these devices with an electrostatic-discharge wrist strap or other grounding system.

A video for this task is available at:

- Youtube: https://www.youtube.com/playlist?list=PLYV5R7hVcs-DY1RaWHYM4xDloAwuBQHR0
- Youku: http://list.youku.com/albumlist/show/id_52339628

Procedure

Step 1. Touch the static-protective package that contains the RAID super capacitor module to any unpainted surface on the outside of the server. Then, take the RAID super capacitor module out of the package and place it on a static-protective surface.

Step 2. Install the RAID super capacitor module on the riser.

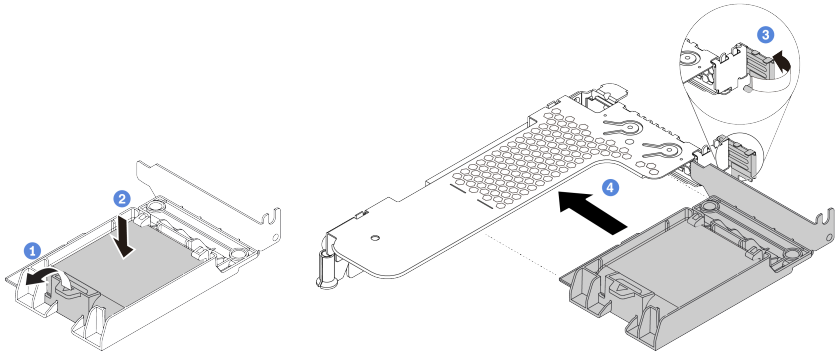

Figure 111. Installation of the RAID super capacitor module on the riser

a. Open the retention clip on the holder.

b. Put the RAID super capacitor module into the holder and press it down to secure it into the holder.

c. Rotate the latch on the riser bracket to the open position.

d. Align the RAID super capacitor assembly with the slot on the riser card. Then, carefully press the RAID super capacitor assembly straight into the slot until it is securely seated and its bracket also is secured.

After you finish

1. Install the riser assembly on the chassis. See Install a riser card.

2. Connect the super capacitor module to an adapter with the extension cable that comes with the super capacitor module. For detailed cable routing information, see Internal cable routing.
3. Complete the parts replacement. See Complete the parts replacement.

Riser card replacement

Use this information to remove and install a riser card.

There are different types of riser assembly configurations. The removal or installation procedure of the riser card is similar for all types of riser assembly. The following takes the LP-FH riser assembly as an example.

Remove a riser card

Use this information to remove a riser card.

About this task

The riser assembly you want to remove might be different from the following illustrations, but the removal method is the same. The following takes the LP-FH riser assembly as an example.

Attention:

- Read Installation Guidelines to ensure that you work safely.
- Power off the server and disconnect all power cords for this task.
- Prevent exposure to static electricity, which might lead to system halt and loss of data, by keeping static-sensitive components in their static-protective packages until installation, and handling these devices with an electrostatic-discharge wrist strap or other grounding system.

A video for this task is available at:

- Youtube: https://www.youtube.com/playlist?list=PLYV5R7hVcs-DY1RaWHYM4xDloAwuBQHR0
- Youku: http://list.youku.com/albumlist/show/id_52339628

Procedure

Step 1. Remove the top cover. See Remove the top cover.

Step 2. If there is any PCIe adapter installed on the riser card, record the cable connections first. Then, disconnect all cables from the PCIe adapter.

Step 3. Grasp the riser assembly by its edges and carefully lift it out of the chassis.

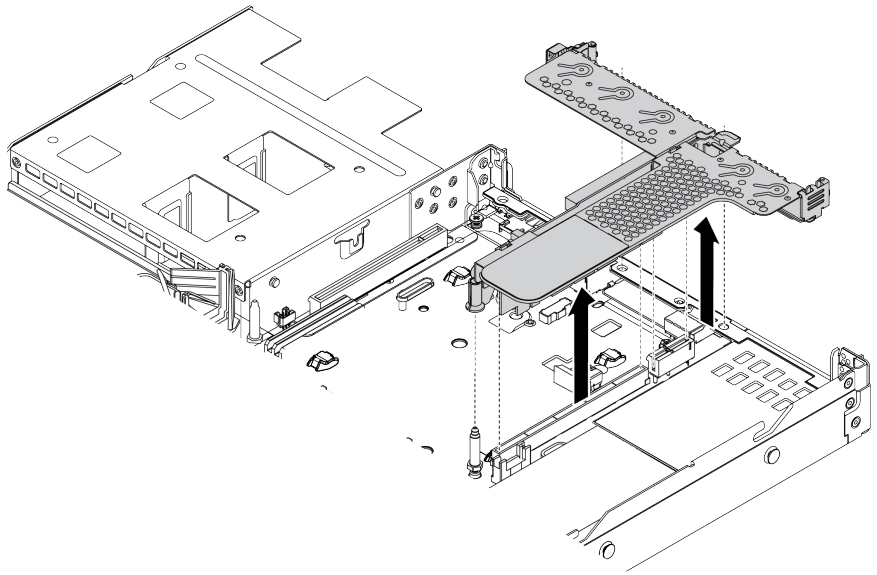

Figure 112. Riser assembly removal

Step 4. If necessary, remove the PCIe adapters that are installed on the riser card. See Remove a PCIe adapter.

Step 5. Remove the riser card from the bracket.

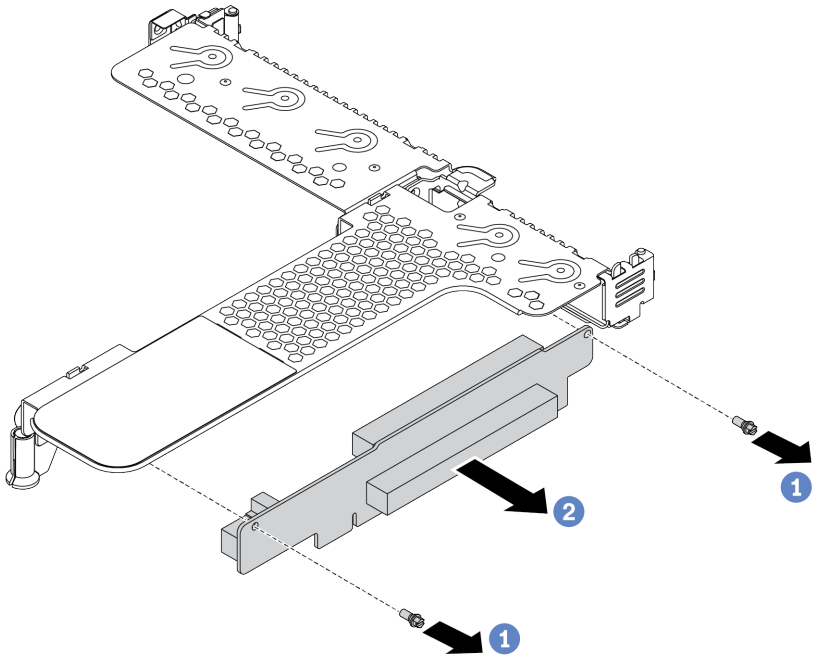

Figure 113. Riser card removal

a. Remove the two screws that secure the riser card to the bracket.

b. Remove the riser card.

After you finish

1. If you are instructed to return the old riser card, follow all packaging instructions and use any packaging materials that are provided.
2. Remove the rear wall bracket if you would like to install a non-LP-FH riser assembly.

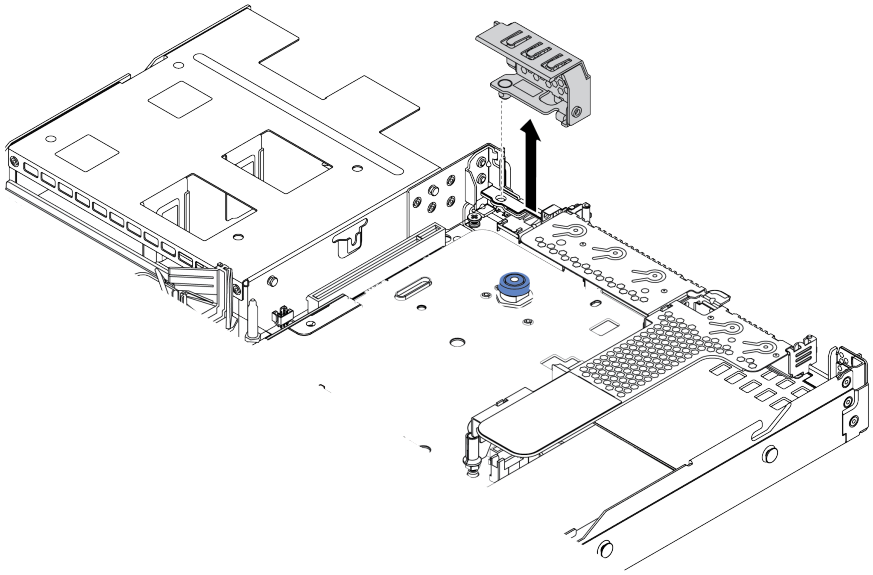

Figure 114. Rear wall bracket removal

Install a riser card

Use this information to install a riser card.

About this task

The riser assembly you want to install might be different from the following illustrations, but the installation method is the same. The following takes the LPFH riser assembly as an example.

Attention:

- Read Installation Guidelines to ensure that you work safely.
- Power off the server and disconnect all power cords for this task.
- Prevent exposure to static electricity, which might lead to system halt and loss of data, by keeping static-sensitive components in their static-protective packages until installation, and handling these devices with an electrostatic-discharge wrist strap or other grounding system.

A video for this task is available at:

- Youtube: https://www.youtube.com/playlist?list=PLYV5R7hVcs-DY1RaWHYM4xDloAwuBQHR0
- Youku: http://list.youku.com/albumlist/show/id_52339628

Procedure

Step 1. Touch the static-protective package that contains the riser card to any unpainted surface on the outside of the server. Then, take the riser card out of the package and place it on a static-protective surface.

Step 2. Install the riser card and secure it to the bracket.

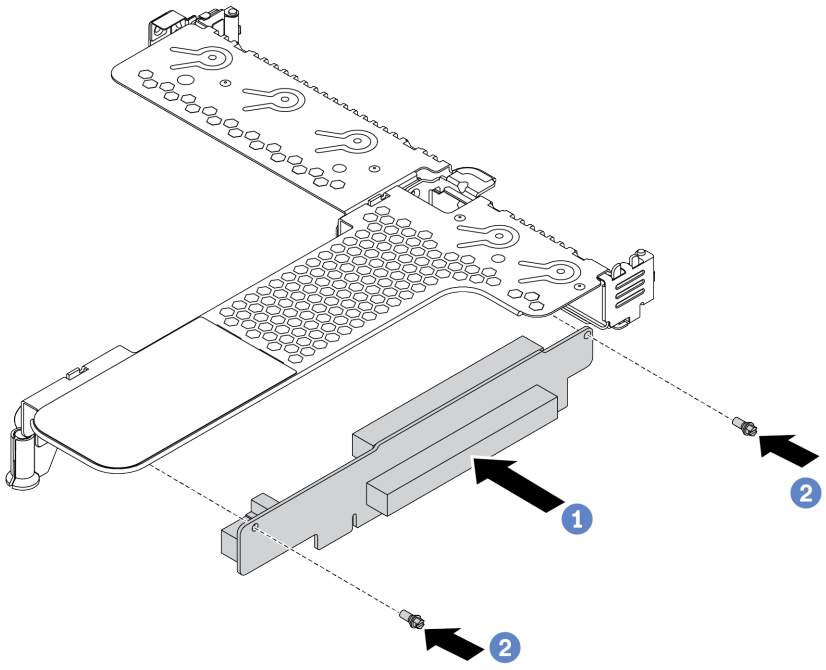

Figure 115. Riser card installation

1. Align the screw holes in the riser card with the corresponding ones in the bracket.
2. Install the two screws to secure the riser card to the bracket

Step 3. If necessary, reinstall the PCIe adapters on the riser card. See Install a PCIe adapter. Then, refer to your note to reconnect any cables of the PCIe adapters on the riser card. Or you can refer to the Internal cable routing and locate the cable routing information for your configuration options.

Step 4. Position the riser assembly on the chassis. Align the plastic clip and two pins on the bracket with the guide pin and two holes on the chassis and align the riser card with the riser slot on the system board. Then, carefully press the riser assembly straight down into the slot until it is fully seated.

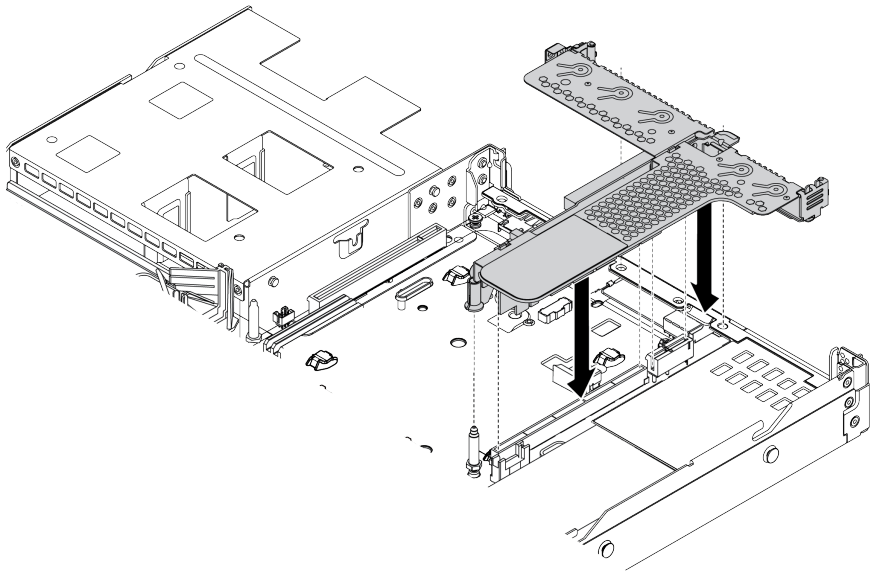

Figure 116. Riser assembly installation

After you finish

Complete the parts replacement. See Complete the parts replacement.

System fan replacement

Use this information to remove and install a system fan.

Remove a system fan

Use this information to remove a system fan. You can remove a hot-swap fan without powering off the server, which helps you avoid significant interruption to the operation of the system.

About this task

S033

CAUTION:
Hazardous energy present. Voltages with hazardous energy might cause heating when shorted with metal, which might result in spattered metal, burns, or both.

S017

CAUTION:
Hazardous moving fan blades nearby.

Attention:

- Read Installation Guidelines to ensure that you work safely.
- Prevent exposure to static electricity, which might lead to system halt and loss of data, by keeping static-sensitive components in their static-protective packages until installation, and handling these devices with an electrostatic-discharge wrist strap or other grounding system.

A video for this task is available at:

- Youtube: https://www.youtube.com/playlist?list=PLYV5R7hVcs-DY1RaWHYM4xDloAwuBQHR0
- Youku: http://list.youku.com/albumlist/show/id_52339628

Procedure

Step 1. Remove the top cover. See Remove the top cover.

Step 2. Grasp the fan tabs on both ends of the system fan and carefully lift the system fan out of the server.

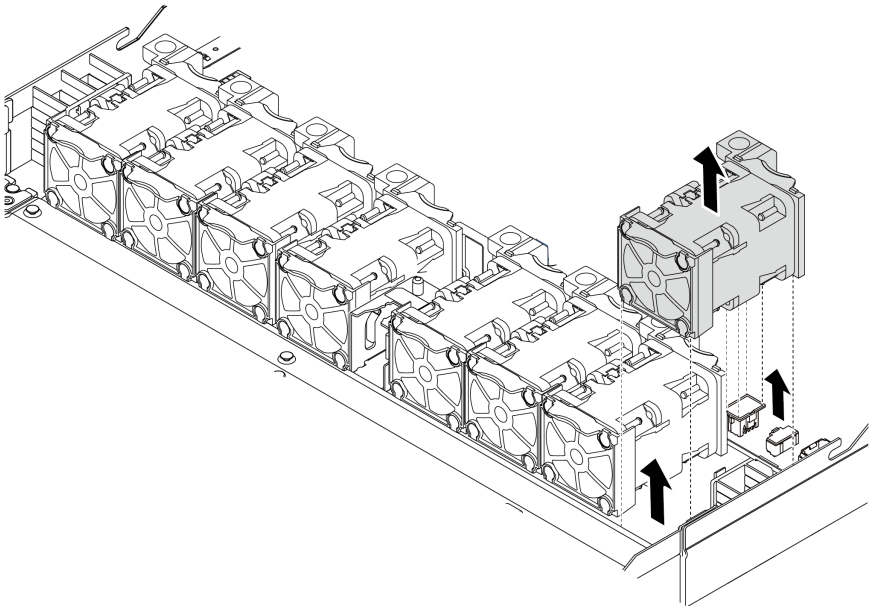

Figure 117. System fan removal

After you finish

1. Install a new system fan or install a fan filler to cover the place. See Install a system fan.
2. If you are instructed to return the old system fan, follow all packaging instructions and use any packaging materials that are provided.

Install a system fan

Use this information to install a system fan. You can install a hot-swap fan without powering off the server, which helps you avoid significant interruption to the operation of the system.

About this task

S033

CAUTION:
Hazardous energy present. Voltages with hazardous energy might cause heating when shorted with metal, which might result in spattered metal, burns, or both.

S017

CAUTION:
Hazardous moving fan blades nearby.

Attention:

- Read Installation Guidelines to ensure that you work safely.
- Prevent exposure to static electricity, which might lead to system halt and loss of data, by keeping static-sensitive components in their static-protective packages until installation, and handling these devices with an electrostatic-discharge wrist strap or other grounding system.

A video for this task is available at:

- Youtube: https://www.youtube.com/playlist?list=PLYV5R7hVcs-DY1RaWHYM4xDloAwuBQHR0
- Youku: http://list.youku.com/albumlist/show/id_52339628

Procedure

Step 1. Touch the static-protective package that contains the system fan to any unpainted surface on the outside of the server. Then, take the system fan out of the package and place it on a static-protective surface.

Note: Ensure that fan installation meets Technical rules for system fans.

Step 2. Place the system fan down in the slot and then press the point on its edge to secure it in place. Ensure that the fan connector is installed correctly to the connector on the system board.

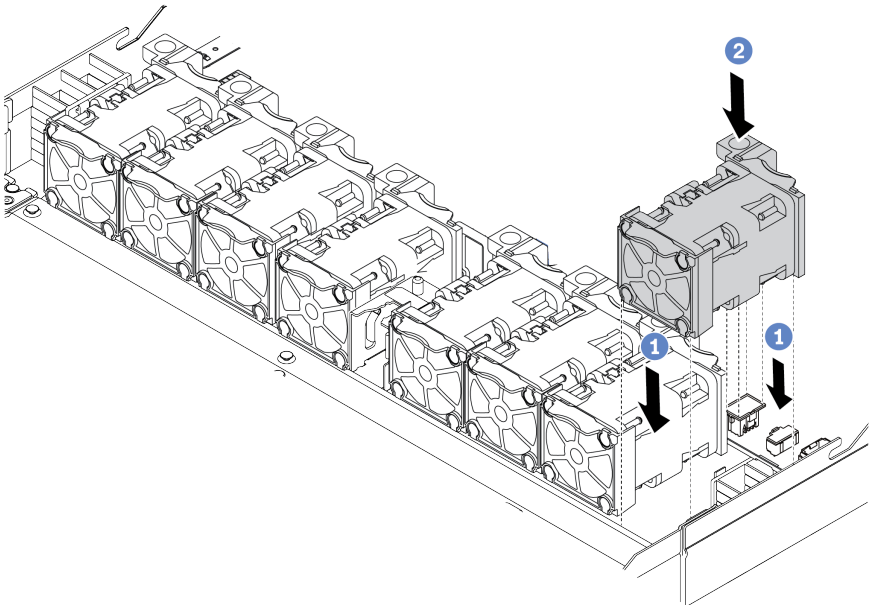

Figure 118. System fan installation

After you finish

Complete the parts replacement. See Complete the parts replacement.

Security bezel replacement

Use this information to remove and install the security bezel.

Note: The security bezel is available on some models.

Remove the security bezel

Use this information to remove the security bezel.

About this task

Attention: Read Installation Guidelines to ensure that you work safely.

A video for this task is available at:

- Youtube: https://www.youtube.com/playlist?list=PLYV5R7hVcs-DY1RaWHYM4xDloAwuBQHR0
- Youku: http://list.youku.com/albumlist/show/id_52339628

Procedure

Step 1. Use the key to unlock the security bezel.

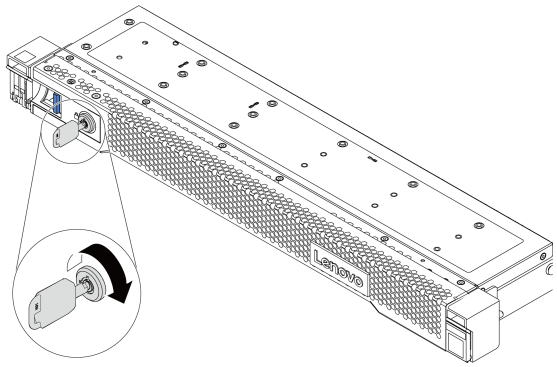

Figure 119. Unlocking the security bezel

Step 2. Press the release latch 1 and rotate the security bezel outward to remove it from the chassis.

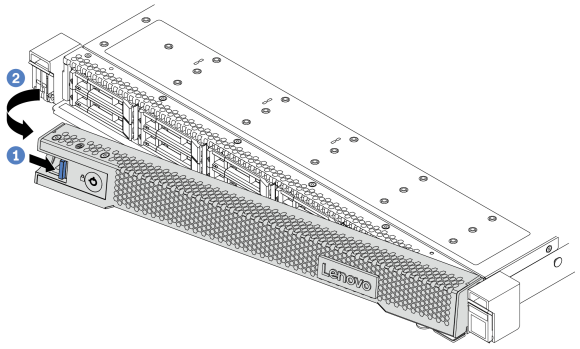

Figure 120. Security bezel removal

Attention: Before you ship the rack with the server installed, reinstall and lock the security bezel into place.

Install the security bezel

Use this information to install the security bezel.

About this task

Attention: Read Installation Guidelines to ensure that you work safely.

A video for this task is available at:

- Youtube: https://www.youtube.com/playlist?list=PLYV5R7hVcs-DY1RaWHYM4xDloAwuBQHR0
- Youku: http://list.youku.com/albumlist/show/id_52339628

Procedure

Step 1. If you have removed the rack latches, reinstall them. See Install the rack latches.

Step 2. If the key is held inside the security bezel, remove it out of the security bezel.

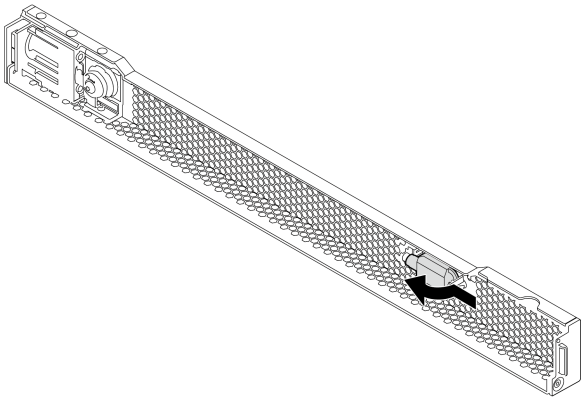

Figure 121. Key removal

Step 3. Carefully insert the tab on the security bezel into the slot on the right rack latch. Then, press and hold the blue release latch and rotate the security bezel inward until the other side clicks into place.

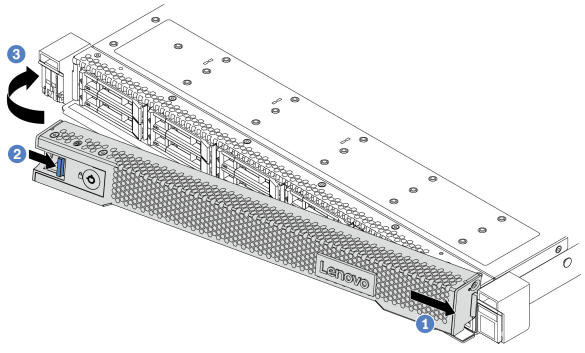

Figure 122. Security bezel installation

Step 4. Use the key to lock the security bezel to the closed position.

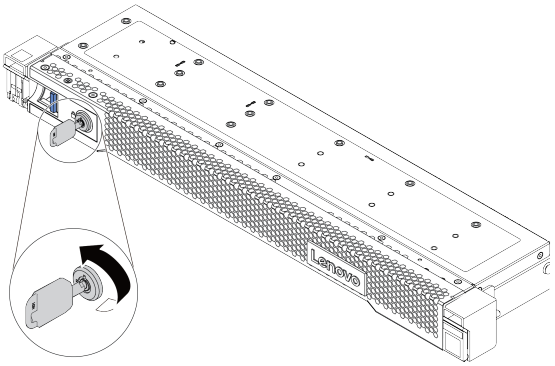

Figure 123. Locking the security bezel

System board replacement

Use this information to remove and install the system board.

S017

CAUTION:
Hazardous moving fan blades nearby.

S012

CAUTION:
Hot surface nearby.

Remove the system board

Use this information to remove the system board.

About this task

A system board, also known as the motherboard, provides different connectors or slots to connect different components or peripherals of the system for communication. If the system board fails, it must be replaced.

Attention:

- Read Installation Guidelines to ensure that you work safely.
- Power off the server and disconnect all power cords for this task.
- Prevent exposure to static electricity, which might lead to system halt and loss of data, by keeping static-sensitive components in their static-protective packages until installation, and handling these devices with an electrostatic-discharge wrist strap or other grounding system.

A video for this task is available at:

- Youtube: https://www.youtube.com/playlist?list=PLYV5R7hVcs-DY1RaWHYM4xDloAwuBQHR0
- Youku: http://list.youku.com/albumlist/show/id_52339628

Procedure

Step 1. Prepare your server.

a. Remove the top cover. See Remove the top cover.

b. If your server comes with an air baffle, remove it first. See Remove the air baffle.

c. If your server comes with a rear drive assembly, remove it first. See Remove the hot-swap rear drive assembly.

d. Record where the cables are connected to the system board; then, disconnect all the cables.

Attention: Disengage all latches, cable clips, release tabs, or locks on cable connectors beforehand. Failing to release them before removing the cables will damage the cable connectors on the system board. Any damage to the cable connectors may require replacing the system board.

e. Remove any of the following components that are installed on the system board and put them in a safe, static-protective place.
   - Processor and heat sink
   - Memory modules
   - System fans
   - RAID super capacitor modules
   - Riser assemblies
   - CMOS battery
   - OCP 3.0 Ethernet adapter

f. Pull out the power supplies slightly. Ensure that they are disconnected from the system board.

Step 2. Remove the system board.

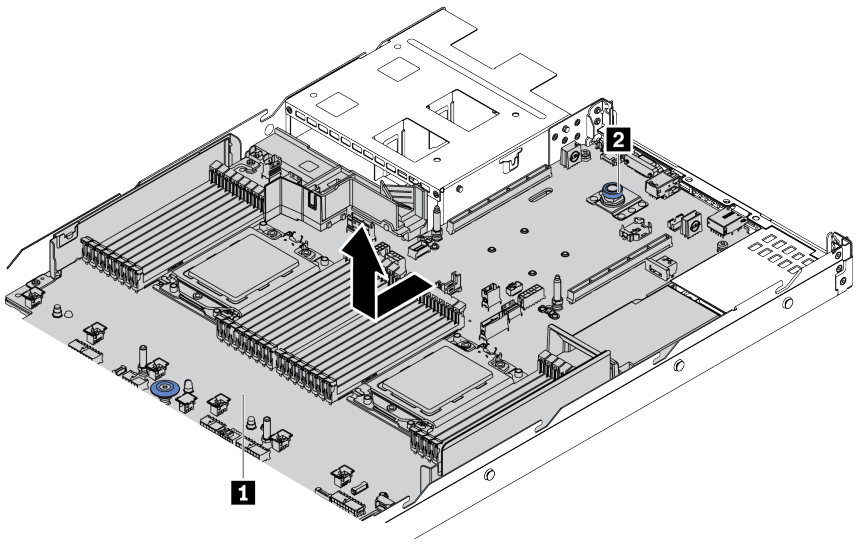

Figure 124. System board removal

a. Hold the lift handle 1 and lift the release pin 2 at the same time and slide the system board toward the front of the server.

b. Lift the system board out of the chassis.

After you finish

If you are instructed to return the old system board, follow all packaging instructions and use any packaging materials that are provided.

Important: Before you return the system board, make sure that the CPU socket is covered. There is a CPU external cap covering the CPU socket on the new system board. Slide the CPU external cap out from the CPU socket on the new system board, and install the external cap on the CPU socket on the removed system board.

If you are planning to recycle the system board, follow the instructions in Hardware disassembling for recycle for compliance with local regulations.

Install the system board

Use this information to install the system board.

About this task

Attention:

- Read Installation Guidelines to ensure that you work safely.
- Power off the server and disconnect all power cords for this task.
- Prevent exposure to static electricity, which might lead to system halt and loss of data, by keeping static-sensitive components in their static-protective packages until installation, and handling these devices with an electrostatic-discharge wrist strap or other grounding system.

A video for this task is available at:

- Youtube: https://www.youtube.com/playlist?list=PLYV5R7hVcs-DY1RaWHYM4xDloAwuBQHR0
- Youku: http://list.youku.com/albumlist/show/id_52339628

Procedure

Step 1. Touch the static-protective package that contains the system board to any unpainted surface on the outside of the server. Then, take the system board out of the package and place it on a static-protective surface.

Step 2. Install the system board to the server.

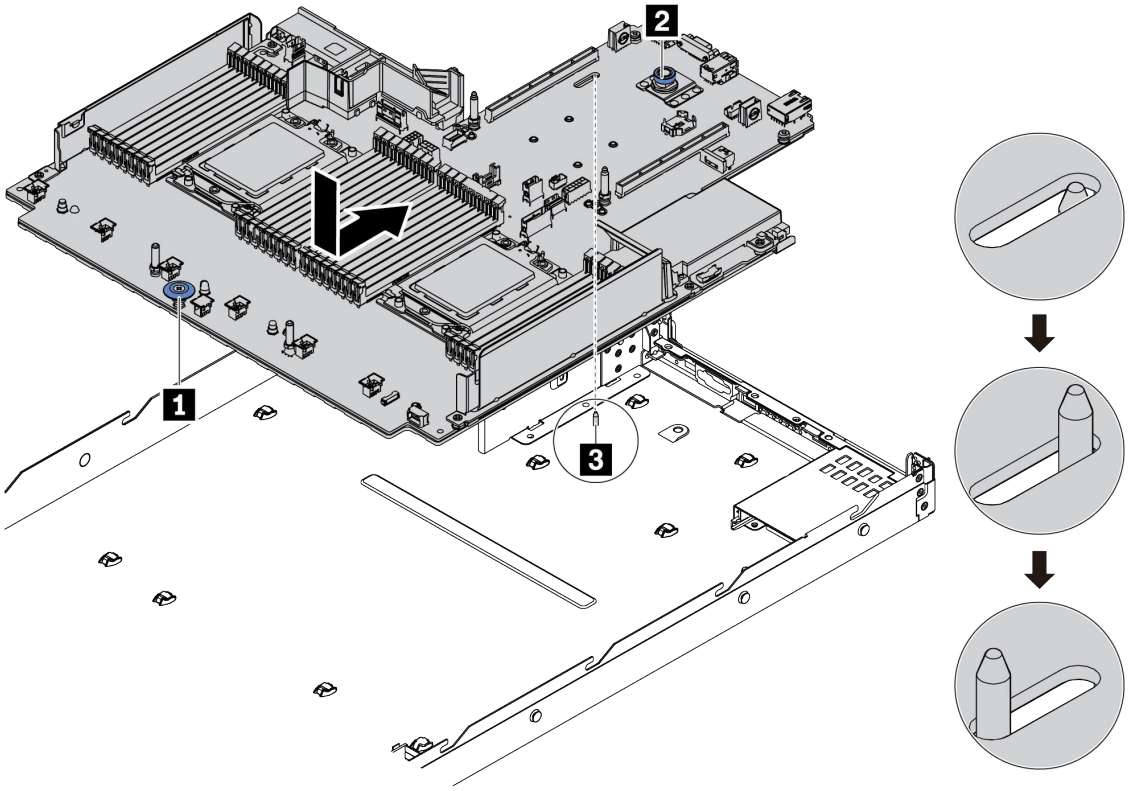

Figure 125. System board installation

a. Hold the lift handle 1 and the release pin 2 at the same time to lower the system board into the chassis.

b. Slide the system board to the rear of the server until the system board snaps into position. Ensure that:

- The new system board is engaged by the locating pin 3 on the chassis.
- The rear connectors on the new system board are inserted into the corresponding holes in the rear panel.
- The release pin 2 secures the system board in place.

After you finish

1. Install any components that you have removed from the failing system board.
   - Processor and heat sink
   - Memory modules
   - System fans
   - RAID super capacitor modules
   - Riser assemblies
   - CMOS battery
   - OCP 3.0 Ethernet adapter

2. Properly route and secure the cables in the server. Refer to detailed cable routing information for each component inInternal cable routing.
3. Install the rear drive cage if you have removed it. See Install the hot-swap rear drive assembly.
4. Install the air baffle if you have removed it. See Install the air baffle.
5. Install the top cover. See Install the top cover.
6. Push the power supplies into the bays until they click into place.
7. Connect power cords to the server and turn on the server.
8. Update the Universally Unique Identifier (UUID) and DMI/SMBIOS data with new vital product data (VPD). Use the Lenovo XClarity Provisioning Manager Liteto update the UUID and DMI/SMBIOS data. See Update the Universal Unique Identifier (UUID) and Update the DMI/SMBIOS data.
9. Enable TPM. See Enable TPM.
10. Optionally, enable Secure Boot.

Update the Universal Unique Identifier (UUID)

The Universal Unique Identifier (UUID) must be updated when the system board is replaced. Use the Lenovo XClarity Provisioning Manager V3 to update the UUID in the UEFI-based server.

1. Start the server and press F11 to display the Lenovo XClarity Provisioning Manager V3 interface.
2. From the System Summary page, click **Update VPD**.
3. Update the UUID.

Update the DMI/SMBIOS data

The Desktop Management Interface (DMI) must be updated when the system board is replaced. Use the Lenovo XClarity Provisioning Manager V3 to update the DMI in the UEFI-based server.

1. Start the server and press F11 to display the Lenovo XClarity Provisioning Manager V3 interface.
2. From the System Summary page, click **Update VPD**.
3. Update the asset tag information.

Enable TPM

The server supports Trusted Platform Module (TPM) of version 2.0 or 1.2.

Note: For customers in the Chinese Mainland, integrated TPM is not supported. However, customers in the Chinese Mainland can install a TPM adapter (sometimes called a daughter card), only version 2.0 is available.

When a system board is replaced, you must make sure that the TPM policy is set correctly.

CAUTION:
Take special care when setting the TPM policy. If it is not set correctly, the system board can become unusable.

Set the TPM policy

By default, a replacement system board is shipped with the TPM policy set to **undefined**. You must modify this setting to match the setting that was in place for the system board that is being replaced.

You can set the TPM policy from Lenovo XClarity Provisioning Manager V3.

Complete the following steps to set the TPM policy.

Step 1. Start the server and when prompted, press F1 to display Lenovo XClarity Provisioning Manager V3.

Step 2. If the power-on Administrator password is required, enter the password.

Step 3. From the System Summary page, click **Update VPD**.

Step 4. Set the policy to one of the following settings.

- **NationZ TPM 2.0 enabled - China only**. Customers in the Chinese Mainland should choose this setting if a NationZ TPM 2.0 adapter is installed.
- **TPM enabled - ROW**. Customers outside of the Chinese Mainland should choose this setting.
- **Permanently disabled**. Customers in the Chinese Mainland should use this setting if no TPM adapter is installed.

Although the setting **undefined** is available as a policy setting, it should not be used.

Assert Physical Presence

Before you can assert Physical Presence, the Physical Presence Policy must be enabled. By default, the Physical Presence Policy is enabled with a timeout of 30 minutes.

If the Physical Presence Policy is enabled, you can assert Physical Presence through hardware jumpers on the system board.

Notes: If the Physical Presence Policy has been disabled:

1. Set the hardware Physical Presence jumper on the system board to assert Physical Presence.
2. Enable the Physical Presence Policy using F1 (UEFI Settings).

Assert Physical Presence through the hardware

You can also assert hardware Physical Presence through the use of a jumper on the system board. For more information about asserting hardware Physical Presence through the use of a jumper, see: Switch block and jumper.

Enable UEFI Secure Boot

Optionally, you can enable UEFI Secure Boot.

Physical Presence must be asserted if you are going to enable UEFI Secure Boot. See Assert Physical Presence.

You can enable UEFI Secure Boot from UEFI System Setup interface. To enable UEFI Secure Boot from System Setup interface:

1. Start the server and when prompted, press **F1** to display System Setup interface.
2. From the UEFI Setup page, click **Security → Secure Boot**.
3. Enable Secure Boot and save the settings.

Top cover replacement

Use this information to remove and install the top cover.

S033

CAUTION:
Hazardous energy present. Voltages with hazardous energy might cause heating when shorted with metal, which might result in spattered metal, burns, or both.

S014

CAUTION:
Hazardous voltage, current, and energy levels might be present. Only a qualified service technician is authorized to remove the covers where the label is attached.

Remove the top cover

Use this information to remove the top cover.

About this task

S033

CAUTION:
Hazardous energy present. Voltages with hazardous energy might cause heating when shorted with metal, which might result in spattered metal, burns, or both.

S014

CAUTION:
Hazardous voltage, current, and energy levels might be present. Only a qualified service technician is authorized to remove the covers where the label is attached.

Attention:

- Read Installation Guidelines to ensure that you work safely.
- Power off the server and disconnect all power cords for this task.
- Prevent exposure to static electricity, which might lead to system halt and loss of data, by keeping static-sensitive components in their static-protective packages until installation, and handling these devices with an electrostatic-discharge wrist strap or other grounding system.

A video for this task is available at:

- Youtube: https://www.youtube.com/playlist?list=PLYV5R7hVcs-DY1RaWHYM4xDloAwuBQHR0
- Youku: http://list.youku.com/albumlist/show/id_52339628

Procedure

Step 1. If the server is installed in a rack, remove the server from the rack. See the Rack Installation Guide that comes with the rail kit for your server.

Step 2. Remove the top cover.

Attention: Handle the top cover carefully. Dropping the top cover with the cover latch open might damage the cover latch.

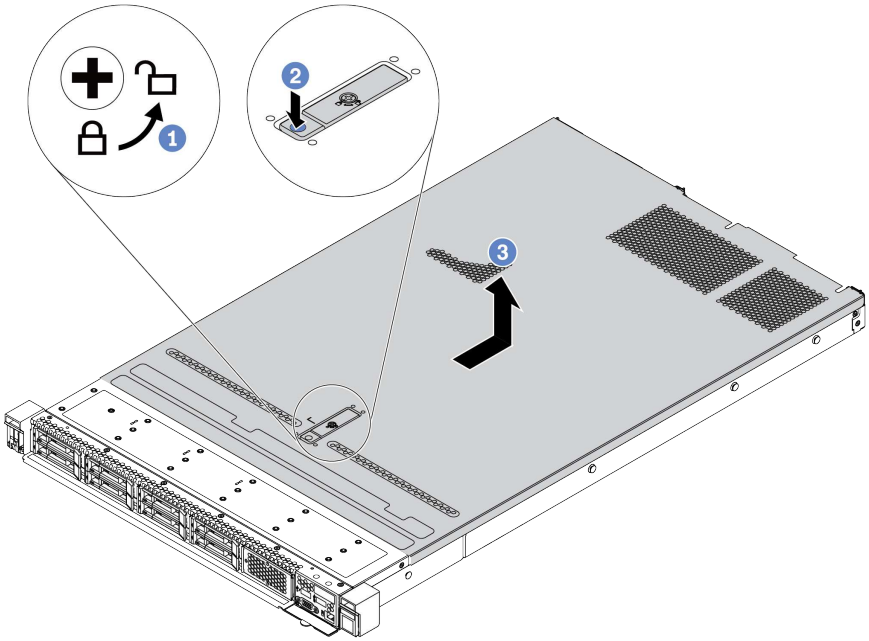

Figure 126. Top cover removal

a. Use a screwdriver to turn the cover lock to the unlocked position as shown.
b. Press the release button on the cover latch and then fully open the cover latch.
c. Slide the top cover to the rear until it is disengaged from the chassis. Then, lift the top cover off the chassis and place the top cover on a flat clean surface.

After you finish

Replace any options as required or install a new top cover. See Install the top cover.

Install the top cover

Use this information to install the top cover.

About this task

S033

CAUTION:
Hazardous energy present. Voltages with hazardous energy might cause heating when shorted with metal, which might result in spattered metal, burns, or both.

S014

CAUTION:
Hazardous voltage, current, and energy levels might be present. Only a qualified service technician is authorized to remove the covers where the label is attached.

Attention:

- Read Installation Guidelines to ensure that you work safely.
- Power off the server and disconnect all power cords for this task.
- Prevent exposure to static electricity, which might lead to system halt and loss of data, by keeping static-sensitive components in their static-protective packages until installation, and handling these devices with an electrostatic-discharge wrist strap or other grounding system.

Operating the server with the top cover removed might damage server components. For proper cooling and airflow, install the top cover before you turn on the server.

Note: A new top cover comes without a service label attached. If you need a service label, order it together with the new top cover and attach the service label to the new top cover first.

A video for this task is available at:

- Youtube: https://www.youtube.com/playlist?list=PLYV5R7hVcs-DY1RaWHYM4xDloAwuBQHR0
- Youku: http://list.youku.com/albumlist/show/id_52339628

Procedure

Step 1. Check your server and ensure that:

- All cables, adapters, and other components are installed and seated correctly and that you have not left loose tools or parts inside the server.
- All internal cables are connected and routed correctly. See Internal cable routing.

Step 2. Install the top cover to your server.

Attention: Handle the top cover carefully. Dropping the top cover with the cover latch open might damage the cover latch.

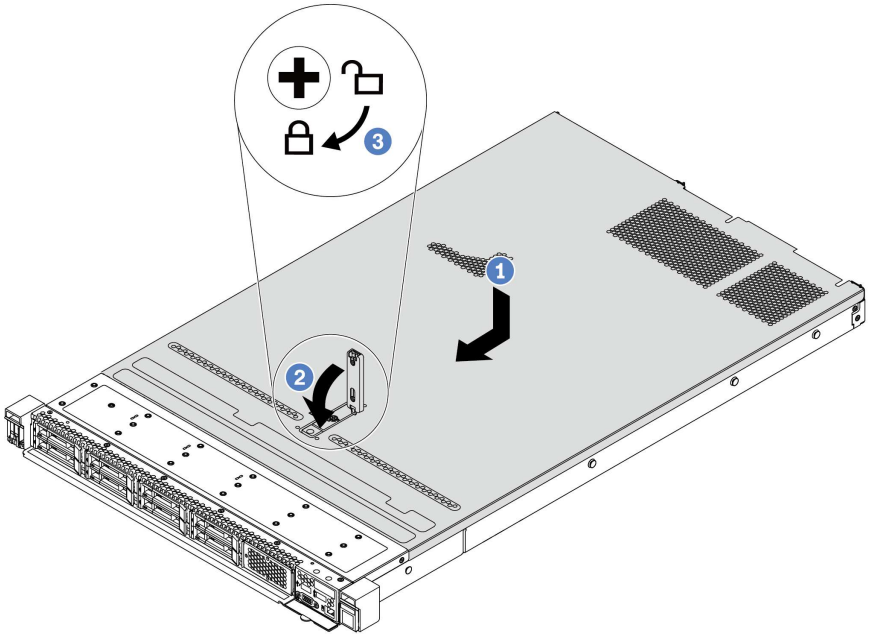

Figure 127. Top cover installation

a. Ensure that the cover latch is in the open position. Lower the top cover onto the chassis until both sides of the top cover engage the guides on both sides of the chassis. Then, slide the top cover to the front of the chassis.

   Note: Before you slide the top cover forward, ensure that all the tabs on the top cover engage the chassis correctly.

b. Press down the cover latch and ensure that the cover latch is completely closed.

c. Use a screwdriver to turn the cover lock to the locked position.

After you finish

After installing the top cover, complete the parts replacement. See Complete the parts replacement.

Complete the parts replacement

Use this information to complete the parts replacement.

To complete the parts replacement, do the following:

1. Ensure that all components have been reassembled correctly and that no tools or loose screws are left inside your server.
2. Properly route and secure the cables in the server. Refer to detailed cable routing information for each component inInternal cable routing.
3. If you have removed the top cover, reinstall it. See Install the top cover.
4. Reconnect external cables and power cords to the server.

   Attention: To avoid component damage, connect the power cords last.
5. Update the server configuration if necessary.
   - Download and install the latest device drivers: http://datacentersupport.lenovo.com
   - Update the system firmware. See Firmware updates.
   - Use the Lenovo XClarity Provisioning Manager V3 to configure the RAID if you have installed or removed a hot-swap drive, a RAID adapter, or the M.2 adapter and M.2 drive. For more information, see: https://sysmgt.lenovofiles.com/help/topic/LXPMv3/LXPMv3_introduction.html

Chapter 5. Problem determination

Use the information in this section to isolate and resolve issues that you might encounter while using your server.

Lenovo servers can be configured to automatically notify Lenovo Support if certain events are generated. You can configure automatic notification, also known as Call Home, from management applications, such as the Lenovo XClarity Administrator. If you configure automatic problem notification, Lenovo Support is automatically alerted whenever a server encounters a potentially significant event.

To isolate a problem, you should typically begin with the event log of the application that is managing the server:

- If you are managing the server from the Lenovo XClarity Administrator, begin with the Lenovo XClarity Administrator event log.
- If you are using some other management application, begin with the Lenovo XClarity Controller event log.

Event logs

An *alert* is a message or other indication that signals an event or an impending event. Alerts are generated by the Lenovo XClarity Controller or by UEFI in the servers. These alerts are stored in the Lenovo XClarity Controller Event Log.

Note: For a listing of events, including user actions that might need to be performed to recover from an event, see the *Messages and Codes Reference*, which is available at:
https://thinksystem.lenovofiles.com/help/topic/7D2X/pdf_files.html

Lenovo XClarity Controller event log

The Lenovo XClarity Controller monitors the physical state of the server and its components using sensors that measure internal physical variables such as temperature, power-supply voltages, fan speeds, and component status. The Lenovo XClarity Controller provides various interfaces to systems management software and to system administrators and users to enable remote management and control of a server.

The Lenovo XClarity Controller monitors all components of the server and posts events in the Lenovo XClarity Controller event log.

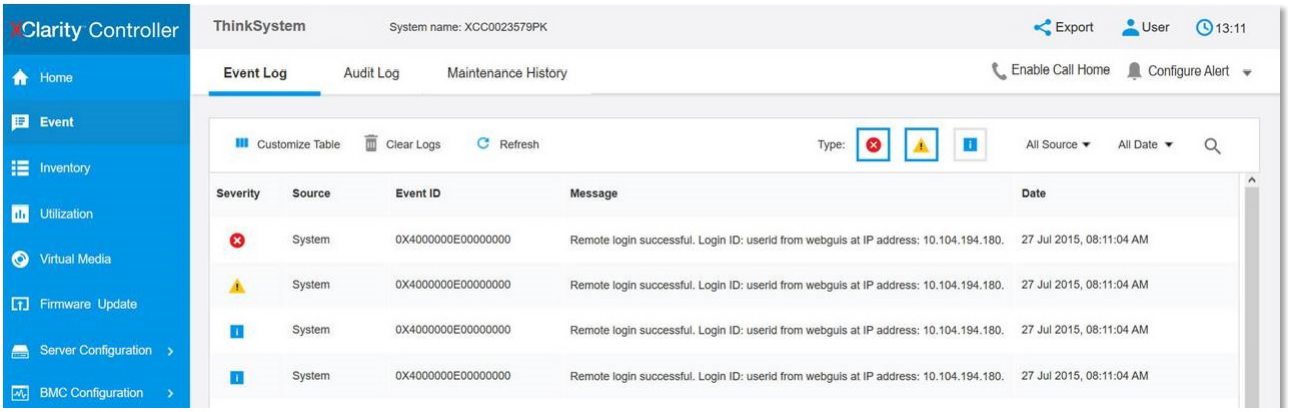

Figure 128. Lenovo XClarity Controller event log

© Copyright Lenovo 2020

For more information about accessing the Lenovo XClarity Controller event log, see:

http://sysmgt.lenovofiles.com/help/topic/com.lenovo.systems.management.xcc.doc/event_log.html

Light path diagnostics

Light path diagnostics is a system of LEDs on various external and internal components of the server that leads you to the failed component. When an error occurs, LEDs are lit on the front I/O assembly, the rear panel, the system board, and the failed component. By viewing the following LEDs, you can often identify the system and device status and diagnose problems.

- Front view
- Diagnostics panel
- LCD diagnostics panel/handset
- Rear view LEDs
- System board LEDs

General problem determination procedures

Use the information in this section to resolve problems if the event log does not contain specific errors or the server is inoperative.

If you are not sure about the cause of a problem and the power supplies are working correctly, complete the following steps to attempt to resolve the problem:

1. Power off the server.
2. Make sure that the server is cabled correctly.
3. Remove or disconnect the following devices, one at a time, until you find the failure. Power on and configure the server each time you remove or disconnect a device.
   - Any external devices.
   - Surge-suppressor device (on the server).
   - Printer, mouse, and non-Lenovo devices.
   - Each adapter.
   - Hard disk drives.
   - Memory modules until you reach the minimum configuration that is supported for the server.

   Note: The minimum configuration required for the server to start is one processor and one 2 GB DIMM.
4. Power on the server.

If the problem is solved when you remove an adapter from the server, but the problem recurs when you install the same adapter again, suspect the adapter. If the problem recurs when you replace the adapter with a different one, try a different PCIe slot.

If the problem appears to be a networking problem and the server passes all system tests, suspect a network cabling problem that is external to the server.

Resolving suspected power problems

Power problems can be difficult to solve. For example, a short circuit can exist anywhere on any of the power distribution buses. Usually, a short circuit will cause the power subsystem to shut down because of an overcurrent condition.

Complete the following steps to diagnose and resolve a suspected power problem.

Step 1. Check the event log and resolve any errors related to the power.

Note: Start with the event log of the application that is managing the server. For more information about event logs, see Event logs.

Step 2. Check for short circuits, for example, if a loose screw is causing a short circuit on a circuit board.

Step 3. Remove the adapters and disconnect the cables and power cords to all internal and external devices until the server is at the minimum configuration that is required for the server to start. See Specifications to determine the minimum configuration for your server.

Step 4. Reconnect all ac power cords and turn on the server. If the server starts successfully, reseat the adapters and devices one at a time until the problem is isolated.

If the server does not start from the minimum configuration, replace the components in the minimum configuration one at a time until the problem is isolated.

Resolving suspected Ethernet controller problems

The method that you use to test the Ethernet controller depends on which operating system you are using. See the operating-system documentation for information about Ethernet controllers, and see the Ethernet controller device-driver readme file.

Complete the following steps to attempt to resolve suspected problems with the Ethernet controller.

Step 1. Make sure that the correct device drivers, which come with the server are installed and that they are at the latest level.

Step 2. Make sure that the Ethernet cable is installed correctly.

- The cable must be securely attached at all connections. If the cable is attached but the problem remains, try a different cable.
- If you set the Ethernet controller to operate at 100 Mbps or 1000 Mbps, you must use Category 5 cabling.

Step 3. Determine whether the hub supports auto-negotiation. If it does not, try configuring the integrated Ethernet controller manually to match the speed and duplex mode of the hub.

Step 4. Check the Ethernet controller LEDs on the rear panel of the server. These LEDs indicate whether there is a problem with the connector, cable, or hub.

- The Ethernet link status LED is lit when the Ethernet controller receives a link pulse from the hub. If the LED is off, there might be a defective connector or cable or a problem with the hub.
- The Ethernet transmit/receive activity LED is lit when the Ethernet controller sends or receives data over the Ethernet network. If the Ethernet transmit/receive activity is off, make sure that the hub and network are operating and that the correct device drivers are installed.

Step 5. Check the LAN activity LED on the rear of the server. The LAN activity LED is lit when data is active on the Ethernet network. If the LAN activity LED is off, make sure that the hub and network are operating and that the correct device drivers are installed.

Step 6. Check for operating-system-specific causes of the problem, and also make sure that the operating system drivers are installed correctly.

Step 7. Make sure that the device drivers on the client and server are using the same protocol.

If the Ethernet controller still cannot connect to the network but the hardware appears to be working, the network administrator must investigate other possible causes of the error.

Troubleshooting by symptom

Use this information to find solutions to problems that have identifiable symptoms.

To use the symptom-based troubleshooting information in this section, complete the following steps:

1. Check the event log of Lenovo XClarity Controller and follow the suggested actions to resolve any event codes.

   For more information about event logs, see Event logs)
2. Review this section to find the symptoms that you are experiencing and follow the suggested actions to resolve the issue.
3. If the problem persists, contact support (see Contacting Support).

Power on and power off problems

Use this information to resolve issues when powering on or powering off the server.

- Embedded hypervisor is not in the boot list
- The power button does not work (server does not start)
- Server does not power on

Embedded hypervisor is not in the boot list

Complete the following steps until the problem is solved.

1. If the server has been installed, moved, or serviced recently, or if this is the first time the embedded hypervisor is being used, make sure that the device is connected properly and that there is no physical damage to the connectors.
2. See the documentation that comes with the optional embedded hypervisor flash device for setup and configuration information.
3. Check https://static.lenovo.com/us/en/serverproven/index.shtml to validate that the embedded hypervisor device is supported for the server.
4. Make sure that the embedded hypervisor device is listed in the list of available boot options. From the management controller user interface, click **Server Configuration → Boot Options**.

   For information about accessing the management controller user interface, see the XClarity Controller product documentation:

   http://sysmgt.lenovofiles.com/help/topic/com.lenovo.systems.management.xcc.doc/dw1lm_c_chapter2_openingandusing.html
5. Check http://datacentersupport.lenovo.com for any tech tips (service bulletins) related to the embedded hypervisor and the server.
6. Make sure that other software works on the server to ensure that it is working properly.

The power button does not work (server does not start)

Note: The power button will not function until approximately 1 to 3 minutes after the server has been connected to ac power to allow time for BMC to initialize.

Complete the following steps until the problem is resolved:

1. Make sure that the power button on the server is working correctly:
   a. Disconnect the server power cords.
   b. Reconnect the server power cords.
   c. Reseat the operator information panel cable, and then repeat steps a and b.
      - If the server starts, reseat the operator information panel.
      - If the problem remains, replace the operator information panel.

2. Make sure that:
   - The power cords are correctly connected to the server and to a working electrical outlet.
   - The LEDs on the power supply do not indicate a problem.
   - The Power button LED is lit on and flash slowly.
   - The push force is enough and with button force response.
3. If the power button LED didn't lit on or flash correctly, Please reseat all the power supplies and make sure AC LED on PSU rear side are lit on.
4. If you have just installed an optional device, remove it, and restart the server.
5. If the issue is still observed or without power button LED lit on, implement the minimum configuration to check whether any specific components lock the power permission. Replace the each power supply and check the power button function after installing the each one.
6. If everything is still done and the issue cannot be resolved, please collect the failure information with system logs captured to Lenovo support.

Server does not power on

Complete the following steps until the problem is resolved:

1. Check the event log for any events related to the server not powering on.
2. Check for any LEDs that are flashing amber.
3. Check the power LED on the system board.
4. Check if AC power LED is lit on or the amber LED is lit on at the PSU rear side.
5. AC cycle the system.
6. Remove the CMOS battery for at least ten seconds, then, reinstall the CMOS battery.
7. Try to power on the system by IPMI command through XCC or by the power button.
8. Implement the minimum configuration (one processor, one DIMM and one PSU without any adapter and any drive installed).
9. Reseat all power supplies and make sure that AC LEDs on the PSU rear side are lit.
10. Replace the each power supply and check the power button function after installing the each one.
11. If the issue cannot be resolved by above actions, please call service to review the issue symptom and see whether the system board replacement is necessary.

Memory problems

Use this information to resolve issues related to memory.

- Displayed system memory is less than installed physical memory
- Multiple rows of DIMMs in a branch identified as failing
- DIMM PFA issue

Displayed system memory is less than installed physical memory

Complete the following steps until the problem is resolved.

Note: Each time you install or remove a DIMM, you must disconnect the server from the power source; then, wait 10 seconds before restarting the server.

1. Make sure that:
   - Memory modules from different vendors are not in the same channel.
   - No error LEDs are lit on the operator information panel.

- No DIMM error LEDs are lit on the system board.
- Memory mirrored channel does not account for the discrepancy.
- The memory modules are seated correctly.
- You have installed the correct type of memory.
- If you changed the memory, you updated the memory configuration in the Setup utility.
- All banks of memory are enabled. The server might have automatically disabled a memory bank when it detected a problem, or a memory bank might have been manually disabled.
- There is no memory mismatch when the server is at the minimum memory configuration.

2. Reseat the DIMMs and then restart the server.
3. Run the memory module diagnostics. When you start a server and press F1, the Lenovo XClarity Provisioning Manager V3 interface is displayed by default. You can perform memory diagnostics from this interface. From the Diagnostic page, click **Run Diagnostic → Memory test**.
4. Check the POST error log:
   - If a DIMM was disabled by a systems-management interrupt (SMI), replace the DIMM.
   - If a DIMM was disabled by the user or by POST, reseat the DIMM; then, run the Setup utility and enable the DIMM.
5. Reseat the DIMM.
6. Restart the server.

Multiple rows of DIMMs in a branch identified as failing

1. Reseat the DIMMs; then, restart the server.
2. Remove the lowest-numbered DIMM pair of those that are identified and replace it with an identical known good DIMM; then, restart the server. Repeat as necessary. If the failures continue after all identified DIMMs are replaced, go to step 4.
3. Return the removed DIMMs, one at a time, to their original connectors, restarting the server after each DIMM, until a DIMM fails. Replace each failing DIMM with an identical known good DIMM, restarting the server after each DIMM replacement. Repeat step 3 until you have tested all removed DIMMs.
4. Replace the lowest-numbered DIMM of those identified; then, restart the server. Repeat as necessary.
5. Reverse the DIMMs between the channels (of the same processor), and then restart the server. If the problem is related to a DIMM, replace the failing DIMM.
6. Swap processors to see if the memory issue followed by the processors or DIMMs. If it follows the failing components, then replace the failing components.
7. (Trained technician only) Replace the system board.

DIMM PFA issue

1. Update the UEFI and XCC firmware to the latest version.
2. Reseat the failing DIMMs.
3. Swap processors and make sure that there are no damages to processor socket pins.
4. (Train service only) Ensure there is no abnormal material in any DIMM slot.
5. Run the memory module diagnostics. When you start a server and press F1, the Lenovo XClarity Provisioning Manager V3 interface is displayed by default. You can perform memory diagnostics from this interface. From the Diagnostic page, click **Run Diagnostic → Memory test**.
6. Replace the failing DIMMs that fails Memory Test.

Hard disk drive problems

Use this information to resolve issues related to the hard disk drives.

- Server cannot recognize a hard drive
- Multiple hard drives fail
- Multiple hard drives are offline
- A replacement hard disk drive does not rebuild
- Green hard disk drive activity LED does not represent actual state of associated drive

Server cannot recognize a hard drive

Complete the following steps until the problem is solved.

1. Observe the associated yellow hard disk drive status LED. If the LED is lit, it indicates a drive fault.
2. If the status LED is lit, remove the drive from the bay, wait 45 seconds, and reinsert the drive, making sure that the drive assembly connects to the hard disk drive backplane.
3. Observe the associated green hard disk drive activity LED and the yellow status LED and perform corresponding operations in different situations:
   - If the green activity LED is flashing and the yellow status LED is not lit, the drive is recognized by the controller and is working correctly. Run the diagnostics tests for the hard disk drives. When you start a server and press F1, the Lenovo XClarity Provisioning Manager V3 interface is displayed by default. You can perform hard drive diagnostics from this interface. From the Diagnostic page, click **Run Diagnostic → HDD test**.
   - If the green activity LED is flashing and the yellow status LED is flashing slowly, the drive is recognized by the controller and is rebuilding.
   - If neither LED is lit or flashing, check whether the hard disk drive backplane is correctly seated. For details, go to step 4.
   - If the green activity LED is flashing and the yellow status LED is lit, replace the drive. If the activity of the LEDs remains the same, go to step Hard disk drive problems. If the activity of the LEDs changes, return to step 1.
4. Make sure that the hard disk drive backplane is correctly seated. When it is correctly seated, the drive assemblies correctly connect to the backplane without bowing or causing movement of the backplane.
5. Reseat the backplane power cable and repeat steps 1 through 3.
6. Reseat the backplane signal cable and repeat steps 1 through 3.
7. Suspect the backplane signal cable or the backplane:
   - Replace the affected backplane signal cable.
   - Replace the affected backplane.
8. Run the diagnostics tests for the hard disk drives. When you start a server and press F1, the Lenovo XClarity Provisioning Manager V3 interface is displayed by default. You can perform hard drive diagnostics from this interface. From the Diagnostic page, click **Run Diagnostic → HDD test**.

   Based on those tests:
   - If the backplane passes the test but the drives are not recognized, replace the backplane signal cable and run the tests again.
   - Replace the backplane.
   - If the adapter fails the test, disconnect the backplane signal cable from the adapter and run the tests again.
   - If the adapter fails the test, replace the adapter.

Multiple hard drives fail

Complete the following steps until the problem is solved:

- View the Lenovo XClarity Controller event log for events related to power supplies or vibration issues and resolve those events.
- Make sure that the device drivers and firmware for the hard disk drive and server are at the latest level

Important: Some cluster solutions require specific code levels or coordinated code updates. If the device is part of a cluster solution, verify that the latest level of code is supported for the cluster solution before you update the code.

Multiple hard drives are offline

Complete the following steps until the problem is solved:

- View the Lenovo XClarity Controller event log for events related to power supplies or vibration issues and resolve those events.
- View the storage subsystem log for events related to the storage subsystem and resolve those events.

One or two 7mm drives identified as failing

Complete the following steps until the problem is solved:

1. Remove and reinstall the reported drive(s) in the same drive bay or another drive bay.
2. If the problem persists, consider replacing the current drives with new ones.
3. If the problem is persists, consider replacing the bottom backplane.
4. If the problem is persists, consider replacing the top backplane.

A replacement hard disk drive does not rebuild

Complete the following steps until the problem is solved:

1. Make sure that the hard disk drive is recognized by the adapter (the green hard disk drive activity LED is flashing).
2. Review the SAS/SATA RAID adapter documentation to determine the correct configuration parameters and settings.

Green hard disk drive activity LED does not represent actual state of associated drive

Complete the following steps until the problem is solved:

1. If the green hard disk drive activity LED does not flash when the drive is in use, run the diagnostics tests for the hard disk drives. When you start a server and press F1, the Lenovo XClarity Provisioning Manager V3 interface is displayed by default. You can perform hard drive diagnostics from this interface. From the Diagnostic page, click **Run Diagnostic → HDD test**
2. If the drive passes the test, replace the backplane.
3. If the drive fails the test, replace the drive.

Monitor and video problems

Use this information to solve problems related to a monitor or video.

- Incorrect characters are displayed
- Screen is blank
- Screen goes blank when you start some application programs
- The monitor has screen jitter, or the screen image is wavy, unreadable, rolling, or distorted

- The wrong characters appear on the screen

Incorrect characters are displayed

Complete the following steps:

1. Verify that the language and locality settings are correct for the keyboard and operating system.
2. If the wrong language is displayed, update the server firmware to the latest level. See Firmware updates.

Screen is blank

Note: Make sure that the expected boot mode has not been changed from the UEFI to Legacy or vice versa.

1. If the server is attached to a KVM switch, bypass the KVM switch to eliminate it as a possible cause of the problem: connect the monitor cable directly to the correct connector on the rear of the server.
2. The management controller remote presence function is disabled if you install an optional video adapter. To use the management controller remote presence function, remove the optional video adapter.
3. If the server is installed with the graphical adapters while turning on the server, the Lenovo logo is displayed on the screen after approximately 3 minutes. This is normal operation while the system loads.
4. Make sure that:
   - The server is turned on and there is power supplied to the server.
   - The monitor cables are connected correctly.
   - The monitor is turned on and the brightness and contrast controls are adjusted correctly.
5. Make sure that the correct server is controlling the monitor, if applicable.
6. Make sure that the video output is not affected by corrupted server firmware; see Firmware updates.
7. If the problem remains, contact Lenovo Support.

Screen goes blank when you start some application programs

1. Make sure that:
   - The application program is not setting a display mode that is higher than the capability of the monitor.
   - You installed the necessary device drivers for the application.

The monitor has screen jitter, or the screen image is wavy, unreadable, rolling, or distorted

1. If the monitor self-tests show that the monitor is working correctly, consider the location of the monitor. Magnetic fields around other devices (such as transformers, appliances, fluorescents, and other monitors) can cause screen jitter or wavy, unreadable, rolling, or distorted screen images. If this happens, turn off the monitor.

   Attention: Moving a color monitor while it is turned on might cause screen discoloration.

   Move the device and the monitor at least 305 mm (12 in.) apart, and turn on the monitor.

   Notes:

   a. To prevent diskette drive read/write errors, make sure that the distance between the monitor and any external diskette drive is at least 76 mm (3 in.).

   b. Non-Lenovo monitor cables might cause unpredictable problems.
2. Reseat the monitor cable.
3. Replace the components listed in step 2 one at a time, in the order shown, restarting the server each time:
   a. Monitor cable
   b. Video adapter (if one is installed)
   c. Monitor

d. (Trained technician only) System board.

The wrong characters appear on the screen

Complete the following steps until the problem is solved:

1. Verify that the language and locality settings are correct for the keyboard and operating system.
2. If the wrong language is displayed, update the server firmware to the latest level. See Firmware updates.

Keyboard, mouse, KVM switch or USB-device problems

Use this information to solve problems related to a keyboard, mouse, KVM switch or USB-device problems.

- All or some keys on the keyboard do not work
- Mouse does not work
- KVM switch problems
- USB-device does not work

All or some keys on the keyboard do not work

1. Make sure that:
   - The keyboard cable is securely connected.
   - The server and the monitor are turned on.
2. If you are using a USB keyboard, run the Setup utility and enable keyboardless operation.
3. If you are using a USB keyboard and it is connected to a USB hub, disconnect the keyboard from the hub and connect it directly to the server.
4. Replace the keyboard.

Mouse does not work

1. Make sure that:
   - The mouse cable is securely connected to the server.
   - The mouse device drivers are installed correctly.
   - The server and the monitor are turned on.
   - The mouse option is enabled in the Setup utility.
2. If you are using a USB mouse and it is connected to a USB hub, disconnect the mouse from the hub and connect it directly to the server.
3. Replace the mouse.

KVM switch problems

1. Make sure that the KVM switch is supported by your server.
2. Make sure that the KVM switch is powered on correctly.
3. If the keyboard, mouse or monitor can be operated normally with direct connection to the server, then replace the KVM switch.

USB-device does not work

1. Make sure that:
   - The correct USB device driver is installed.
   - The operating system supports USB devices.
2. Make sure that the USB configuration options are set correctly in system setup.

Restart the server and press F1 to display the Lenovo XClarity Provisioning Manager V3 system setup interface. Then, click **System Settings → Devices and I/O Ports → USB Configuration**.

3. If you are using a USB hub, disconnect the USB device from the hub and connect it directly to the server.

Optional-device problems

Use this information to solve problems related to optional devices.

- External USB device is not recognized
- PCIe adapter is not recognized or is not functioning
- A Lenovo optional device that worked previously does not work now
- A Lenovo optional device that was just installed does not work.
- A Lenovo optional device that worked previously does not work now

External USB device is not recognized

Complete the following steps until the problem is resolved:

1. Update the UEFI firmware to the latest version.
2. Make sure that the proper drivers are installed on the compute node. See the product documentation for the USB device for information about device drivers.
3. Use the Setup utility to make sure that the device is configured correctly.
4. If the USB device is plugged into a hub or the console breakout cable, unplug the device and plug it directly into the USB port on the front of the compute node.

PCIe adapter is not recognized or is not functioning

Complete the following steps until the problem is resolved:

1. Update the UEFI firmware to the latest version.
2. Check the event log and resolve any issues related to the device.
3. Validate that the device is supported for the server (see https://static.lenovo.com/us/en/serverproven/index.shtml). Make sure that the firmware level on the device is at the latest supported level and update the firmware if applicable.
4. Make sure that the adapter is installed in a correct slot.
5. Make sure that the proper device drivers are installed for the device.
6. Resolve any resource conflicts if running legacy mode (UEFI). Check legacy ROM boot orders and modify the UEFI setting for MM config base.

   Note: Ensure that you modify the ROM boot order associated with the PCIe adapter to the first execution order.
7. Check http://datacentersupport.lenovo.com for any tech tips (also known as retain tips or service bulletins) that might be related to the adapter.
8. Ensure any adapter external connections are correct and that the connectors are not physically damaged.
9. Make sure that the PCIe adapter is installed with the supported operating system.

Insufficient PCIe resources are detected.

If you see an error message stating “Insufficient PCI Resources Detected,” complete the following steps until the problem is resolved:

1. Press Enter to access System Setup Utility.

2. Select **System Settings → Devices and I/O Ports → MM Config Base**; then, modify the setting to increase the device resources. For example, modify 3 GB to 2 GB or modify 2 GB to 1 GB.
3. Save the settings and restart the system.
4. If the error recurs with the highest device resource setting (1GB), shutdown the system and remove some PCIe devices; then, power on the system.
5. If the reboot failed, repeat step 1 to step 4.
6. If the error recurs, press Enter to access System Setup Utility.
7. Select **System Settings → Devices and I/O Ports → PCI 64–Bit Resource Allocation**, then; modify the setting from **Auto** to **Enable**.
8. If the Boot Device does not support MMIO above 4GB for Legacy Boot, use UEFI Boot Mode or remove/disable some PCIe devices.
9. DC cycle the system and ensure the system is enter UEFI boot menu or the operating system; then, capture the FFDC log.
10. Contact Lenovo technical support.

A Lenovo optional device that was just installed does not work.

1. Make sure that:
   - The device is supported for the server (see https://static.lenovo.com/us/en/serverproven/index.shtml).
   - You followed the installation instructions that came with the device and the device is installed correctly.
   - You have not loosened any other installed devices or cables.
   - You updated the configuration information in system setup. When you start a server and press F1 to display the Setup Utility. Whenever memory or any other device is changed, you must update the configuration.
2. Reseat the device that you have just installed.
3. Replace the device that you have just installed.
4. Reseat the cable connection and check there is no physical damage to the cable.
5. If there is any cable damages, then replace the cable.

A Lenovo optional device that worked previously does not work now

1. Make sure that all of the cable connections for the device are secure.
2. If the device comes with test instructions, use those instructions to test the device.
3. Reseat the cable connection and check if any physical parts have been damaged, .
4. Replace the cable.
5. Reseat the failing device.
6. Replace the failing device.

Serial-device problems

Use this information to solve problems with serial ports or devices.

- Number of displayed serial ports is less than the number of installed serial ports
- Serial device does not work

Number of displayed serial ports is less than the number of installed serial ports

Complete the following steps until the problem is solved.

1. Make sure that:

- Each port is assigned a unique address in the Setup utility and none of the serial ports is disabled.
- The serial-port adapter (if one is present) is seated correctly.

2. Reseat the serial port adapter.
3. Replace the serial port adapter.

Serial device does not work

1. Make sure that:
   - The device is compatible with the server.
   - The serial port is enabled and is assigned a unique address.
   - The device is connected to the correct connector.
2. Reseat the following components:
   a. Failing serial device.
   b. Serial cable.
3. Replace the following components:
   a. Failing serial device.
   b. Serial cable.
4. (Trained technician only) Replace the system board.

Intermittent problems

Use this information to solve intermittent problems.

- Intermittent external device problems
- Intermittent KVM problems
- Intermittent unexpected reboots

Intermittent external device problems

Complete the following steps until the problem is solved.

1. Update the UEFI and XCC firmware to the latest versions.
2. Make sure that the correct device drivers are installed. See the manufacturer's website for documentation.
3. For a USB device:
   a. Make sure that the device is configured correctly.

      Restart the server and press F1 to display the Lenovo XClarity Provisioning Manager V3 system setup interface. Then, click **System Settings → Devices and I/O Ports → USB Configuration**.

   b. Connect the device to another port. If using a USB hub, remove the hub and connect the device directly to the compute node. Make sure that the device is configured correctly for the port.

Intermittent KVM problems

Complete the following steps until the problem is solved.

Video problems:

1. Make sure that all cables and the console breakout cable are properly connected and secure.
2. Make sure that the monitor is working properly by testing it on another compute node.

3. Test the console breakout cable on a working compute node to ensure that it is operating properly. Replace the console breakout cable if it is defective.

Keyboard problems:

Make sure that all cables and the console breakout cable are properly connected and secure.

Mouse problems:

Make sure that all cables and the console breakout cable are properly connected and secure.

Intermittent unexpected reboots

Note: Some correctable errors require that the server reboot so that it can disable a device, such as a memory DIMM or a processor to allow the machine to boot up properly.

1. If the reset occurs during POST and the POST watchdog timer is enabled, make sure that sufficient time is allowed in the watchdog timeout value (POST Watchdog Timer).

   To check the POST watchdog time, restart the server and press F1 to display the Lenovo XClarity Provisioning Manager V3 system setup interface. Then, click **BMC Settings → POST Watchdog Timer**.
2. If the reset occurs after the operating system starts, enter the operating system when the system operates normally and set up operating system kernel dump process (Windows and Linux base operating systems will be using different method). Enter the UEFI setup menus and disable the feature, or disable it with the following OneCli command.
   `OneCli.exe config set SystemRecovery.RebootSystemOnNMI Disable --bmc`*xcc_userid* `PASSWORD@`*xcc_ipaddress*
3. See the management controller event log to check for an event code that indicates a reboot. See Event logs for information about viewing the event log. If you are using Linux base operating system, then capture all logs back to Lenovo support for further investigation.

Power problems

Use this information to resolve issues related to power.

System error LED is on and event log "Power supply has lost input" is displayed

To resolve the problem, ensure that:

1. The power supply is properly connected to a power cord.
2. The power cord is connected to a properly grounded electrical outlet for the server.
3. Make sure that the power supply AC source is stable within the supported range.
4. Swap the power supply to see if the issue follows the power supply, if it follows the power supply, then replace the failing one.
5. Review the event log and see how the problem it is to follow the event log actions to resolved the problems.

Network problems

Use this information to resolve issues related to networking.

- Cannot wake server using Wake on LAN
- Could not log in using LDAP account with SSL enabled

Cannot wake server using Wake on LAN

Complete the following steps until the problem is resolved:

1. If you are using the dual-port network adapter and the server is connected to the network using Ethernet 5 connector, check the system-error log or IMM2 system event log (see Event logs), make sure:
   a. Fan 3 is running in standby mode, if Emulex dual port 10GBase-T embedded adapter is installed.
   b. The room temperature is not too high (see Specifications).
   c. The air vents are not blocked.
   d. The air baffle is installed securely.
2. Reseat the dual-port network adapter.
3. Turn off the server and disconnect it from the power source; then, wait 10 seconds before restarting the server.
4. If the problem still remains, replace the dual-port network adapter.

Could not log in using LDAP account with SSL enabled

Complete the following steps until the problem is resolved:

1. Make sure that the license key is valid.
2. Generate a new license key and log in again.

Observable problems

Use this information to solve observable problems.

- Server hangs during the UEFI boot process
- The server immediately displays the POST Event Viewer when it is turned on
- Server is unresponsive (POST is complete and operating system is running)
- Server is unresponsive (cannot press F1 to start System Setup)
- Voltage planar fault is displayed in the event log
- Unusual smell
- Server seems to be running hot
- Cracked parts or cracked chassis

Server hangs during the UEFI boot process

If the system hangs during the UEFI boot process with the message `UEFI: DXE INIT` on the display, make sure that Option ROMs were not configured with a setting of **Legacy**. You can remotely view the current settings for Option ROMs by running the following command using the Lenovo XClarity Essentials OneCLI:

```
onecli config show EnableDisableAdapterOptionROMSupport --bmc xcc_userid:xcc_password@xcc_ipaddress
```

To recover a system that hangs during the boot process with Legacy Option ROM settings, see the following Tech Tip:

https://datacentersupport.lenovo.com/us/en/solutions/ht506118

If legacy Option ROMs must be used, do not set slot Option ROMs to **Legacy** on the Devices and I/O Ports menu. Instead, set slot Option ROMs to **Auto** (the default setting), and set the System Boot Mode to **Legacy Mode**. Legacy option ROMs will be invoked shortly before the system boots.

The server immediately displays the POST Event Viewer when it is turned on

Complete the following steps until the problem is solved.

1. Correct any errors that are indicated by the light path diagnostics LEDs.
2. Make sure that the server supports all the processors and that the processors match in speed and cache size.

   You can view processor details from system setup.

   To determine if the processor is supported for the server, see https://static.lenovo.com/us/en/serverproven/index.shtml.
3. (Trained technician only) Make sure that processor 1 is seated correctly
4. (Trained technician only) Remove processor 2 and restart the server.
5. Replace the following components one at a time, in the order shown, restarting the server each time:
   a. (Trained technician only) Processor
   b. (Trained technician only) System board

Server is unresponsive (POST is complete and operating system is running)

Complete the following steps until the problem is solved.

- If you are in the same location as the compute node, complete the following steps:
  1. If you are using a KVM connection, make sure that the connection is operating correctly. Otherwise, make sure that the keyboard and mouse are operating correctly.
  2. If possible, log in to the compute node and verify that all applications are running (no applications are hung).
  3. Restart the compute node.
  4. If the problem remains, make sure that any new software has been installed and configured correctly.
  5. Contact your place of purchase of the software or your software provider.
- If you are accessing the compute node from a remote location, complete the following steps:
  1. Make sure that all applications are running (no applications are hung).
  2. Attempt to log out of the system and log back in.
  3. Validate the network access by pinging or running a trace route to the compute node from a command line.
     a. If you are unable to get a response during a ping test, attempt to ping another compute node in the enclosure to determine whether it is a connection problem or compute node problem.
     b. Run a trace route to determine where the connection breaks down. Attempt to resolve a connection issue with either the VPN or the point at which the connection breaks down.
  4. Restart the compute node remotely through the management interface.
  5. If the problem remains, verify that any new software has been installed and configured correctly.
  6. Contact your place of purchase of the software or your software provider.

Server is unresponsive (cannot press F1 to start System Setup)

Configuration changes, such as added devices or adapter firmware updates, and firmware or application code problems can cause the server to fail POST (the power-on self-test).

If this occurs, the server responds in either of the following ways:

- The server restarts automatically and attempts POST again.
- The server hangs, and you must manually restart the server for the server to attempt POST again.

After a specified number of consecutive attempts (automatic or manual), the server reverts to the default UEFI configuration and starts System Setup so that you can make the necessary corrections to the

configuration and restart the server. If the server is unable to successfully complete POST with the default configuration, there might be a problem with the system board.

You can specify the number of consecutive restart attempts in System Setup. Restart the server and press F1 to display the Lenovo XClarity Provisioning Manager V3 system setup interface. Then, click **System Settings → Recovery and RAS → POST Attempts → POST Attempts Limit**. Available options are 3, 6, 9, and disable.

Voltage planar fault is displayed in the event log

Complete the following steps until the problem is solved.

1. Revert the system to the minimum configuration. See Specifications for the minimally required number of processors and DIMMs.
2. Restart the system.
   - If the system restarts, add each of the removed items one at a time and restart the system each time until the error occurs. Replace the item for which the error occurs.
   - If the system does not restart, suspect the system board.

Unusual smell

Complete the following steps until the problem is solved.

1. An unusual smell might be coming from newly installed equipment.
2. If the problem remains, contact Lenovo Support.

Server seems to be running hot

Complete the following steps until the problem is solved.

Multiple compute nodes or chassis:

1. Make sure that the room temperature is within the specified range (see Specifications).
2. Make sure that the fans are installed correctly.
3. Update the UEFI and XCC to the latest versions.
4. Make sure that the fillers in the server are installed correctly (see *Maintenance Manual* for detailed installation procedures).
5. Use the IPMI command to ramp up the fan speed to the full fan speed to see whether the issue can be resolved.

   Note: The IPMI raw command should only be used by trained technician and the each system has its own specific PMI raw command.
6. Check the management processor event log for rising temperature events. If there are no events, the compute node is running within normal operating temperatures. Note that you can expect some variation in temperature.

Cracked parts or cracked chassis

Contact Lenovo Support.

Software problems

Use this information to solve software problems.

1. To determine whether the problem is caused by the software, make sure that:
   - The server has the minimum memory that is needed to use the software. For memory requirements, see the information that comes with the software.

Note: If you have just installed an adapter or memory, the server might have a memory-address conflict.

- The software is designed to operate on the server.
- Other software works on the server.
- The software works on another server.

2. If you receive any error messages while you use the software, see the information that comes with the software for a description of the messages and suggested solutions to the problem.
3. Contact your place of purchase of the software.

Appendix A. Hardware disassembling for recycle

Follow the instructions in this section to recycle components with compliance with local laws or regulations.

Disassembling the system board for recycle

Follow the instructions in this section to disassemble the system board before recycling.

Before disassembling the system board:

1. Remove the system board from the server (see Remove the system board).
2. Refer to local environmental, waste or disposal regulations to ensure compliance.

Complete the following steps to disassemble the system board:

© Copyright Lenovo 2020

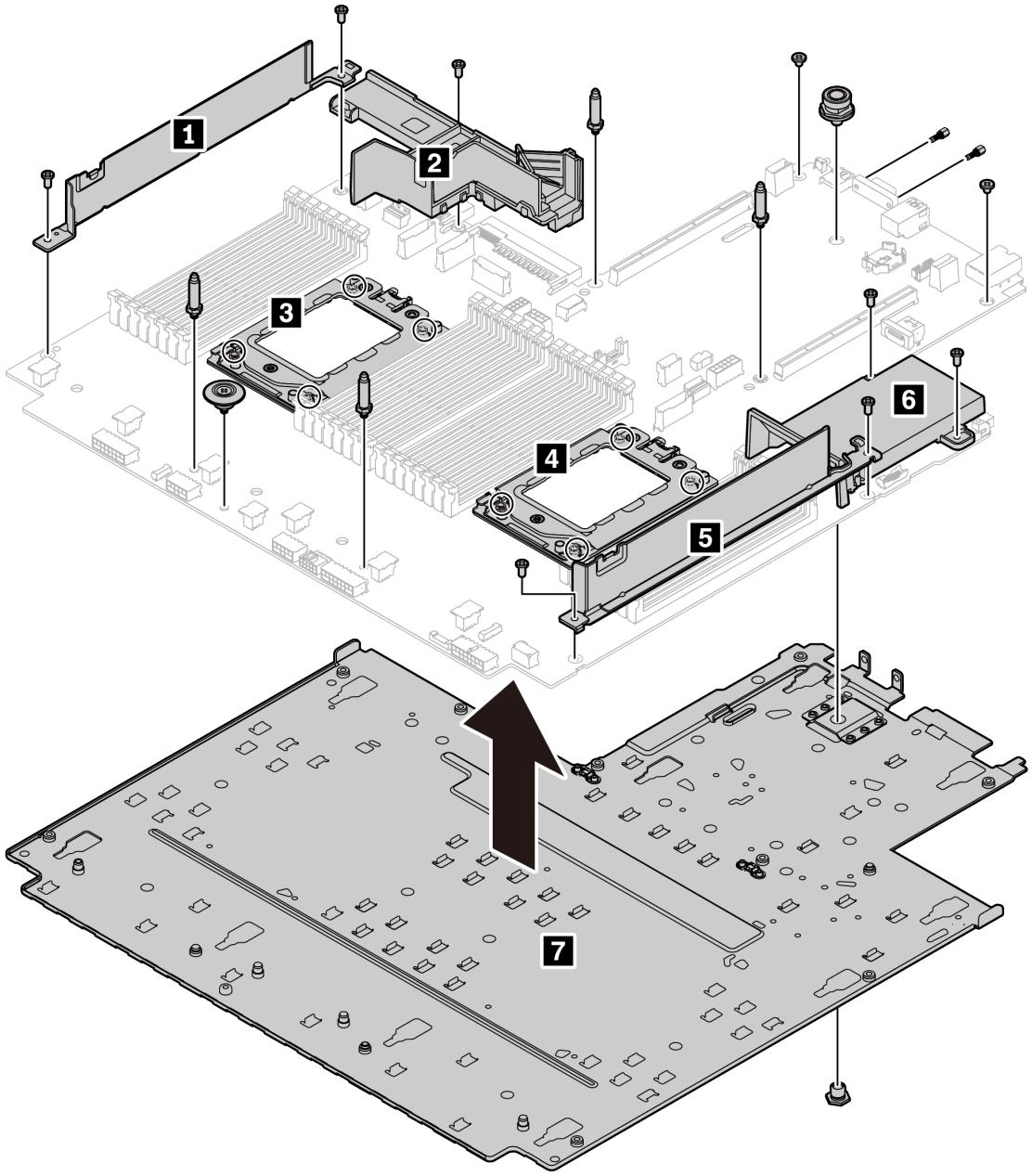

Figure 129. Disassembling the system board

Step 1. Remove the following screws as illustrated:

- 12 slotted screws (with PH2 screwdriver)
- Two guiding pin standoffs (with 7 mm wrench)
- One plunger (with 11 mm and 16 mm wrench)
- Eight T20 screws on the CPU sockets (with T20 screwdriver)
- Two hexagon bolts on the VGA connector (with 5 mm wrench)

Step 2. Separate the components **1** **2** **3** **4** **5** **6** **7** from the system board.

After disassembling the system board, comply with local regulations when recycling.

Appendix B. Getting help and technical assistance

If you need help, service, or technical assistance or just want more information about Lenovo products, you will find a wide variety of sources available from Lenovo to assist you.

On the World Wide Web, up-to-date information about Lenovo systems, optional devices, services, and support are available at:

http://datacentersupport.lenovo.com

Note: This section includes references to IBM Web sites and information about obtaining service. IBM is Lenovo's preferred service provider for ThinkSystem.

Before you call

Before you call, there are several steps that you can take to try and solve the problem yourself. If you decide that you do need to call for assistance, gather the information that will be needed by the service technician to more quickly resolve your problem.

Attempt to resolve the problem yourself

You can solve many problems without outside assistance by following the troubleshooting procedures that Lenovo provides in the online help or in the Lenovo product documentation. The Lenovo product documentation also describes the diagnostic tests that you can perform. The documentation for most systems, operating systems, and programs contains troubleshooting procedures and explanations of error messages and error codes. If you suspect a software problem, see the documentation for the operating system or program.

You can find the product documentation for your ThinkSystem products at the following location:

http://thinksystem.lenovofiles.com/help/index.jsp

You can take these steps to try to solve the problem yourself:

- Check all cables to make sure that they are connected.
- Check the power switches to make sure that the system and any optional devices are turned on.
- Check for updated software, firmware, and operating-system device drivers for your Lenovo product. The Lenovo Warranty terms and conditions state that you, the owner of the Lenovo product, are responsible for maintaining and updating all software and firmware for the product (unless it is covered by an additional maintenance contract). Your service technician will request that you upgrade your software and firmware if the problem has a documented solution within a software upgrade.
- If you have installed new hardware or software in your environment, check https://static.lenovo.com/us/en/serverproven/index.shtml to make sure that the hardware and software are supported by your product.
- Go to http://datacentersupport.lenovo.com and check for information to help you solve the problem.
  - Check the Lenovo forums at https://forums.lenovo.com/t5/Datacenter-Systems/ct-p/sv_eg to see if someone else has encountered a similar problem.

You can solve many problems without outside assistance by following the troubleshooting procedures that Lenovo provides in the online help or in the Lenovo product documentation. The Lenovo product documentation also describes the diagnostic tests that you can perform. The documentation for most systems, operating systems, and programs contains troubleshooting procedures and explanations of error

© Copyright Lenovo 2020

messages and error codes. If you suspect a software problem, see the documentation for the operating system or program.

Gathering information needed to call Support

If you require warranty service for your Lenovo product, the service technicians will be able to assist you more efficiently if you prepare the appropriate information before you call. You can also go to http://datacentersupport.lenovo.com/warrantylookup for more information about your product warranty.

Gather the following information to provide to the service technician. This data will help the service technician quickly provide a solution to your problem and ensure that you receive the level of service for which you might have contracted.

- Hardware and Software Maintenance agreement contract numbers, if applicable
- Machine type number (Lenovo 4-digit machine identifier)
- Model number
- Serial number
- Current system UEFI and firmware levels
- Other pertinent information such as error messages and logs

As an alternative to calling Lenovo Support, you can go to https://support.lenovo.com/servicerequest to submit an Electronic Service Request. Submitting an Electronic Service Request will start the process of determining a solution to your problem by making the pertinent information available to the service technicians. The Lenovo service technicians can start working on your solution as soon as you have completed and submitted an Electronic Service Request.

Collecting service data

To clearly identify the root cause of a server issue or at the request of Lenovo Support, you might need collect service data that can be used for further analysis. Service data includes information such as event logs and hardware inventory.

Service data can be collected through the following tools:

- **Lenovo XClarity Provisioning Manager V3**

  Use the Collect Service Data function of Lenovo XClarity Provisioning Manager V3 to collect system service data. You can collect existing system log data or run a new diagnostic to collect new data.

- **BMC**

  You can use the BMC Web user interface or the CLI to collect service data for the server. The file can be saved and sent to Lenovo Support.

  – For more information about using the web interface to collect service data, see .

    https://sysmgt.lenovofiles.com/help/topic/LXPMv3/LXPMv3_introduction.html

Contacting Support

You can contact Support to obtain help for your issue.

You can receive hardware service through a Lenovo Authorized Service Provider. To locate a service provider authorized by Lenovo to provide warranty service, go to https://datacentersupport.lenovo.com/serviceprovider and use filter searching for different countries. For Lenovo support telephone numbers, see https://datacentersupport.lenovo.com/supportphonelist for your region support details.

Appendix C. Notices

Lenovo may not offer the products, services, or features discussed in this document in all countries. Consult your local Lenovo representative for information on the products and services currently available in your area.

Any reference to a Lenovo product, program, or service is not intended to state or imply that only that Lenovo product, program, or service may be used. Any functionally equivalent product, program, or service that does not infringe any Lenovo intellectual property right may be used instead. However, it is the user's responsibility to evaluate and verify the operation of any other product, program, or service.

Lenovo may have patents or pending patent applications covering subject matter described in this document. The furnishing of this document is not an offer and does not provide a license under any patents or patent applications. You can send inquiries in writing to the following:

Lenovo (United States), Inc.
8001 Development Drive
Morrisville, NC 27560
U.S.A.
Attention: Lenovo Director of Licensing

LENOVO PROVIDES THIS PUBLICATION “AS IS” WITHOUT WARRANTY OF ANY KIND, EITHER EXPRESS OR IMPLIED, INCLUDING, BUT NOT LIMITED TO, THE IMPLIED WARRANTIES OF NON-INFRINGEMENT, MERCHANTABILITY OR FITNESS FOR A PARTICULAR PURPOSE. Some jurisdictions do not allow disclaimer of express or implied warranties in certain transactions, therefore, this statement may not apply to you.

This information could include technical inaccuracies or typographical errors. Changes are periodically made to the information herein; these changes will be incorporated in new editions of the publication. Lenovo may make improvements and/or changes in the product(s) and/or the program(s) described in this publication at any time without notice.

The products described in this document are not intended for use in implantation or other life support applications where malfunction may result in injury or death to persons. The information contained in this document does not affect or change Lenovo product specifications or warranties. Nothing in this document shall operate as an express or implied license or indemnity under the intellectual property rights of Lenovo or third parties. All information contained in this document was obtained in specific environments and is presented as an illustration. The result obtained in other operating environments may vary.

Lenovo may use or distribute any of the information you supply in any way it believes appropriate without incurring any obligation to you.

Any references in this publication to non-Lenovo Web sites are provided for convenience only and do not in any manner serve as an endorsement of those Web sites. The materials at those Web sites are not part of the materials for this Lenovo product, and use of those Web sites is at your own risk.

Any performance data contained herein was determined in a controlled environment. Therefore, the result obtained in other operating environments may vary significantly. Some measurements may have been made on development-level systems and there is no guarantee that these measurements will be the same on generally available systems. Furthermore, some measurements may have been estimated through extrapolation. Actual results may vary. Users of this document should verify the applicable data for their specific environment.

© Copyright Lenovo 2020

Trademarks

LENOVO, THINKSYSTEM, and XCLARITY are trademarks of Lenovo.

AMD and EPYC are trademarks of AMD Corporation in United States. Microsoft and Windows are trademarks of the Microsoft group of companies. Linux is a registered trademark of Linus Torvalds. All other trademarks are the property of their respective owners. © 2020 Lenovo.

Important notes

Processor speed indicates the internal clock speed of the microprocessor; other factors also affect application performance.

CD or DVD drive speed is the variable read rate. Actual speeds vary and are often less than the possible maximum.

When referring to processor storage, real and virtual storage, or channel volume, KB stands for 1 024 bytes, MB stands for 1 048 576 bytes, and GB stands for 1 073 741 824 bytes.

When referring to hard disk drive capacity or communications volume, MB stands for 1 000 000 bytes, and GB stands for 1 000 000 000 bytes. Total user-accessible capacity can vary depending on operating environments.

Maximum internal hard disk drive capacities assume the replacement of any standard hard disk drives and population of all hard-disk-drive bays with the largest currently supported drives that are available from Lenovo.

Maximum memory might require replacement of the standard memory with an optional memory module.

Each solid-state memory cell has an intrinsic, finite number of write cycles that the cell can incur. Therefore, a solid-state device has a maximum number of write cycles that it can be subjected to, expressed as `total bytes written` (TBW). A device that has exceeded this limit might fail to respond to system-generated commands or might be incapable of being written to. Lenovo is not responsible for replacement of a device that has exceeded its maximum guaranteed number of program/erase cycles, as documented in the Official Published Specifications for the device.

Lenovo makes no representations or warranties with respect to non-Lenovo products. Support (if any) for the non-Lenovo products is provided by the third party, not Lenovo.

Some software might differ from its retail version (if available) and might not include user manuals or all program functionality.

Particulate contamination

Attention: Airborne particulates (including metal flakes or particles) and reactive gases acting alone or in combination with other environmental factors such as humidity or temperature might pose a risk to the device that is described in this document.

Risks that are posed by the presence of excessive particulate levels or concentrations of harmful gases include damage that might cause the device to malfunction or cease functioning altogether. This specification sets forth limits for particulates and gases that are intended to avoid such damage. The limits must not be viewed or used as definitive limits, because numerous other factors, such as temperature or moisture content of the air, can influence the impact of particulates or environmental corrosives and gaseous contaminant transfer. In the absence of specific limits that are set forth in this document, you must

implement practices that maintain particulate and gas levels that are consistent with the protection of human health and safety. If Lenovo determines that the levels of particulates or gases in your environment have caused damage to the device, Lenovo may condition provision of repair or replacement of devices or parts on implementation of appropriate remedial measures to mitigate such environmental contamination. Implementation of such remedial measures is a customer responsibility.

Table 30. Limits for particulates and gases

Contaminant	Limits
Particulate	• The room air must be continuously filtered with 40% atmospheric dust spot efficiency (MERV 9) according to ASHRAE Standard 52.2[1]. • Air that enters a data center must be filtered to 99.97% efficiency or greater, using high-efficiency particulate air (HEPA) filters that meet MIL-STD-282. • The deliquescent relative humidity of the particulate contamination must be more than 60%[2]. • The room must be free of conductive contamination such as zinc whiskers.
Gaseous	• Copper: Class G1 as per ANSI/ISA 71.04-1985[3] • Silver: Corrosion rate of less than 300 Å in 30 days

[1] ASHRAE 52.2-2008 - *Method of Testing General Ventilation Air-Cleaning Devices for Removal Efficiency by Particle Size*. Atlanta: American Society of Heating, Refrigerating and Air-Conditioning Engineers, Inc.

[2] The deliquescent relative humidity of particulate contamination is the relative humidity at which the dust absorbs enough water to become wet and promote ionic conduction.

[3] ANSI/ISA-71.04-1985. *Environmental conditions for process measurement and control systems: Airborne contaminants*. Instrument Society of America, Research Triangle Park, North Carolina, U.S.A.

Telecommunication regulatory statement

This product may not be certified in your country for connection by any means whatsoever to interfaces of public telecommunications networks. Further certification may be required by law prior to making any such connection. Contact a Lenovo representative or reseller for any questions.

Electronic emission notices

When you attach a monitor to the equipment, you must use the designated monitor cable and any interference suppression devices that are supplied with the monitor.

Additional electronic emissions notices are available at:

http://thinksystem.lenovofiles.com/help/index.jsp

Taiwan BSMI RoHS declaration

單元 Unit	限用物質及其化學符號 Restricted substances and its chemical symbols					
	鉛Lead (PB)	汞Mercury (Hg)	鎘Cadmium (Cd)	六價鉻 Hexavalent chromium (Cr^{+6})	多溴聯苯 Polybrominated biphenyls (PBB)	多溴二苯醚 Polybrominated diphenyl ethers (PBDE)
機架	○	○	○	○	○	○
外部蓋板	○	○	○	○	○	○
機械組合件	–	○	○	○	○	○
空氣傳動設備	–	○	○	○	○	○
冷卻組合件	–	○	○	○	○	○
內存模組	–	○	○	○	○	○
處理器模組	–	○	○	○	○	○
電纜組合件	–	○	○	○	○	○
電源供應器	–	○	○	○	○	○
儲備設備	–	○	○	○	○	○
電路卡	–	○	○	○	○	○
光碟機	–	○	○	○	○	○

備考1. 〝超出0.1 wt %〞及〝超出0.01 wt %〞係指限用物質之百分比含量超出百分比含量基準值。

Note1 : “exceeding 0.1wt%” and “exceeding 0.01 wt%” indicate that the percentage content of the restricted substance exceeds the reference percentage value of presence condition.

備考2. 〝○〞係指該項限用物質之百分比含量未超出百分比含量基準值。

Note2 : “○”indicates that the percentage content of the restricted substance does not exceed the percentage of reference value of presence.

備考3. 〝-〞係指該項限用物質為排除項目。

Note3 : The “-“ indicates that the restricted substance corresponds to the exemption.

Taiwan import and export contact information

Contacts are available for Taiwan import and export information.

委製商/進口商名稱: 台灣聯想環球科技股份有限公司
進口商地址: 台北市南港區三重路 66 號 8 樓
進口商電話: 0800-000-702

Index

2.5-inch rear drive backplane
  removing 135
2.5-inch/3.5-inch drive
  power cable routing 65
7mm drive backplane
  installing 142
  removing 139

A

air baffle
  installing 109
  removing 107
  replacing 107
assert
  physical presence 236

B

backplane
  installing 142
  removing 131, 139
  replacing 127
bezel
  installing 229
  removing 227
  replacing 227

C

cable routing
  backplane 59, 61
  FIO 59
  intrusion switch 60
  super capacitor 61
Cable routing for the 7mm drives. 63
Cable routing for the M.2 drives. 64
Cable routing for the server model with 10 x 2.5-inch (6 SAS/SATA + 2 AnyBay + 2 NVMe) 92
Cable routing for the server model with 10 x 2.5-inch (6 SAS/SATA + 4 AnyBay) 86
Cable routing for the server model with 10 x 2.5-inch (6 SAS/SATA + 4 NVMe) 90
Cable routing for the server model with 4 x 2.5-inch front drive bays (SAS/SATA) 67
Cable routing for the server model with 4 x 3.5-inch front drive bays (AnyBay) 75
Cable routing for the server model with 4 x 3.5-inch front drive bays (SAS/SATA) 71
Cable routing for the server model with 8 x 2.5-inch front drive bays (SAS/SATA) 68
Cable routing for the server model with one 10 x 2.5-inch front drive backplane 79
Cable routing for the server model with one 10 x 2.5-inch front drive backplane (8 AnyBay + 2 NVMe) 84
Cable routing for the server model with one 10 x 2.5-inch front drive backplane(NVMe) 81
CFF RAID/HBA adapter
  power cable routing 58
CMOS battery
  install 114
  remove 111
  replacing 111
collecting service data 264
completing
  parts replacement 241
contamination, particulate and gaseous 266
cover
  installing 239
  removing 237
  replacing 237
CPU
  installing 196
  replacing 191
creating a personalized support web page 263
custom support web page 263

D

devices, static-sensitive
  handling 97
diagnostics panel
  LCD 27
diagnostics panel assembly
  installing 121
DIMM
  replacing 171
disassembling 261

E

enable
  TPM 235
environmental restrictions 105
Ethernet
  controller
    troubleshooting 245
Ethernet controller problems
  solving 245
External
  LCD diagnostics handset 27

F

fan
  installing 225
  removing 223
  replacing 223
fan error LED 45
firmware updates 8
front 2.5-inch-drive backplane
  installing 129
  removing 127
front 3.5-inch-drive backplane
  installing 133
  removing 131
front I/O assembly
  installing 118
  removing 117
  replacing 116

G

gaseous contamination 266
Getting help 263
GPU 105
guidelines

© Copyright Lenovo 2020

options installation 95
system reliability 96

H

handling static-sensitive devices 97
hard disk drive
installing 125
replacing 123
hard disk drive problems 249
hard disk drives
removing 123
hardware service and support telephone numbers 264
heat sink
replacing 191
Heat sink and processor
replacing 191
help 263
hot-swap drive
installing 125
replacing 123
hot-swap drives
removing 123
hot-swap power supply
installing 157
hot-swap rear drive assembly
installing 146
removing 144
replacing 144

I

ID label 1
important notices 266
install
CMOS battery 114
installation
guidelines 95
installation guidelines 95
installing
air baffle 109
backplane 142
CPU 196
diagnostics panel assembly 121
front 2.5-inch-drive backplane 129
front 3.5-inch-drive backplane 133
front I/O assembly 118
hard disk drive 125
hot-swap drive 125
hot-swap power supply 157
hot-swap rear drive assembly 146
internal CFF RAID/HBA adapter 167
intrusion switch 170
memory module 174
OCP 3.0 Ethernet adapter 185
PCIe adapter 189
processor 196, 198, 200
rack latches 204
RAID super capacitor module on the air baffle 213
RAID super capacitor module on the chassis 209
RAID super capacitor module on the riser 216
rear backplane 137
riser card 221
security bezel 229
standard heat sink 198
system board 233
system fan 225
T-shaped heat sink 200
top cover 239
insufficient PCIe resource
solving 253
intermittent problems 255
internal cable routing 55
internal CFF RAID/HBA adapter
installing 167
removing 165
replacing 165
introduction 1
intrusion switch
installing 170
removing 168
replacing 168

J

jumper 48

K

keyboard problems 252

L

LCD
diagnostics panel 27
LCD diagnostics handset
External 27
LCD diagnostics panel assembly
removing 120
light path diagnostics 244

M

M.2 adapter and M.2 drive
installing 181
replacing 177
memory
problems 247
memory module
removing 171
memory module error LED 45
memory module, install 174
memory modules
removal 171
memory modules installation rules 101, 173
microprocessor
replacing 191
monitor problems 250
mouse problems 252

N

network
problems 256
network access label 1
notes, important 266
notices 265

O

observable problems 257
OCP 3.0 Ethernet adapter
replacing 184
optional-device problems 253

P

particulate contamination 266
parts list 50
parts replacement, completing 241
PCIe
  troubleshooting 253
PCIe adapter
  installing 189
  removing 187
  replacing 187
physical presence 236
power
  problems 256
power cable routing
  2.5-inch/3.5-inch drive backplanes 65
  CFF RAID/HBA adapter 58
power cords 54
power off the server 12
power on the server 12
power problems 244
power supply unit
  removing 150
  replacing 149
problems
  Ethernet controller 245
  hard disk drive 249
  intermittent 255
  keyboard 252
  memory 247
  monitor 250
  mouse 252
  network 256
  observable 257
  optional devices 253
  PCIe 253
  power 244, 256
  power on and power off 246
  serial-device 254
  software 259
  USB device 252
  video 250
processor
  installing 191, 193, 195–196, 198, 200
  removing 195
  replacing 191
processor and memory expansion tray 261
processor-heat-sink module
  installing 196

R

rack latches
  installing 204
  removing 202
  replacing 202
RAID super capacitor module
  replacing 206
RAID super capacitor module on the air baffle
  installing 213
  removing 212
RAID super capacitor module on the chassis
  installing 209
  removing 207
RAID super capacitor module on the riser
  installing 216
  removing 215
rear backplane
  installing 137
Rear view 34
recycle 261
recycling 261
remove
  CMOS battery 111
  M.2 adapter and M.2 drive 177
  OCP 3.0 Ethernet adapter 184
removing
  2.5-inch rear drive backplane 135
  7mm drive backplane 139
  air baffle 107
  backplane 131, 139
  front 2.5-inch-drive backplane 127
  front I/O assembly 117
  hard disk drive 123
  hot-swap drive 123
  hot-swap rear drive assembly 144
  internal CFF RAID/HBA adapter 165
  intrusion switch 168
  LCD diagnostics panel assembly 120
  memory modules 171
  PCIe adapter 187
  power supply unit 150
  processor 191, 193, 195
  rack latches 202
  RAID super capacitor module on the air baffle 212
  RAID super capacitor module on the chassis 207
  RAID super capacitor module on the riser 215
  riser card 218
  security bezel 227
  standard heat sink 191
  system board 231
  system fan 223
  T-shaped heat sink 193
  top cover 237
removing, memory module 171
replacing
  air baffle 107
  backplane 127
  CMOS battery 111
  CPU 191
  DIMM 171
  front I/O assembly 116
  hard disk drive 123
  heat sink 191
  hot-swap drive 123
  hot-swap rear drive assembly 144
  internal CFF RAID/HBA adapter 165
  intrusion switch 168
  M.2 adapter and M.2 drive 177
  microprocessor 191
  OCP 3.0 Ethernet adapter 184
  PCIe adapter 187
  power supply unit 149
  processor 191
  Processor and heat sink 191
  rack latches 202
  RAID super capacitor module 206
  riser card 218
  security bezel 227
  system board 231
  system fan 223
  top cover 237
retainer on M.2 adapter
  adjusting 180
riser card
  installing 221
  removing 218
  replacing 218

S

safety v
safety inspection checklist vi
Secure Boot 236
security advisories 11
security bezel

© Copyright Lenovo 2020

installing 229
removing 227
replacing 227
serial-device problems 254
server power on or power off problems 246
service and support
before you call 263
hardware 264
software 264
service data 264
signal cable routing
2.5-inch/3.5-inch drive backplanes 66
software 13
software problems 259
software service and support telephone numbers 264
solving
Ethernet controller problems 245
insufficient PCIe resource 253
solving power problems 244
standard heat sink
installing 198
removing 191
static-sensitive devices
handling 97
support web page, custom 263
supported drive bay combinations 99
system board 261
installing 233
removing 231
replacing 231
system board components 43
system board LED 45
system error LED 45
system fan
installing 225
removing 223
replacing 223
system ID LED 45
system power LED 45
system reliability guidelines 96

T

T-shaped heat sink
installing 200
removing 193
Taiwan BSMI RoHS declaration 268
Taiwan import and export contact information 268
tech tips 11
technical rules 105
Technical rules for PCIe adapter 103
Technical rules for processors and heat sinks 98
technical rules for system fans 105
telecommunication regulatory statement 267
telephone numbers 264
top cover
installing 239
removing 237
replacing 237
TPM 235
TPM policy 235
trademarks 266
troubleshooting 250, 253, 259
by symptom 245
hard disk drive problems 249
intermittent problems 255
keyboard problems 252
memory problems 247
mouse problems 252
network problems 256
observable problems 257
power on and power off problems 246
power problems 256
serial-device problems 254
symptoms-based troubleshooting 245
USB-device problems 252
video 250
Trusted Platform Module 235

U

UEFI Secure Boot 236
update firmware 8
updating
DMI/SMBIOS 235
Universal Unique Identifier (UUID) 235
USB-device problems 252

V

video problems 250

W

warranty 1
working inside the server
power on 96