

INSTRUCTION BOOK FOR

Advantage® Manual With CSR (Controlled Screen Return)

DA-LITE®

Disclaimer

Legrand AV Inc. and its affiliated companies and subsidiaries (collectively, "Legrand AV"), intend to make this manual accurate and complete. However, Legrand AV makes no claim that the information contained herein covers all details, conditions or variations, nor does it provide for every possible contingency in connection with the installation or use of the products described herein. The content herein is subject to change without notice or obligation of any kind. To the maximum extent permitted by applicable law, Legrand AV makes no representation or warranty, expressed or implied, regarding the information contained herein. Furthermore, Legrand AV assumes no responsibility for accuracy, completeness or sufficiency of the information contained in this document.

Da-Lite® is a registered trademark of Legrand AV.

All rights reserved.

Important Safety Instructions

When using your video equipment, basic safety precautions should always be followed, including the following:

1. Read and understand all instructions before using.
2. Failure to provide adequate structural strength for this component can result in serious personal injury or damage to equipment! It is the installer's responsibility to make sure the structure to which this component is attached can support the weight of all equipment. Reinforce the structure as required before installing the component.
3. Use this projection screen only for its intended use as described in these instructions. Do not use attachments not recommended by the manufacturer.

Save These Instructions

Pre-Installation

1. Carefully unpack case from shipping carton. DO NOT unpack fabric and roller assembly yet.
2. Make sure to recheck measurement of case for proper installation clearance.
3. Remove any protective foam or tape from case.

Case Installation

1. Hang case and attach to support structure with bolts. See suggested methods of installation on page 3.

   NOTE: Carriage bolts can be installed anywhere along the length of the case. The head of the carriage bolt slides into the variable-position mounting channel. It is recommended that the center is supported on cases longer than 7 feet.

2. Tighten bolts until trim flange is flush with ceiling.

   NOTE: For proper operation, screen assembly must be level after installation.

Screen and Roller Assembly Installation for 60" to 96" Wide Screens

If your screen was shipped with the fabric and roller already installed, skip this section.

1. Remove access door. First remove the 2 screws from the ends (Figure 1). Be sure to support the door during this step to avoid injury. Lift the door slightly and pull away from the edge of the case.
2. Carefully unpack screen and roller assembly. Leave packing paper on roller.
3. Loosen (but do not remove) two 1/4-20 nuts securing the spring and dampener end bracket (stage left) to the case housing. Slide the bracket towards the end of the case.
4. Insert the pin end of the roller (stage right) into the pin end bracket. The mounting brackets have a formed tab that the slat bar will rest against. Be sure to install the roller assembly so the slat bar is positioned onto the tab. (Figure 2).
5. Slide the spring and dampener end bracket onto the square end of the dampener assembly. Tighten the 1/4-20 nuts securely.
6. Re-install the access door. Procedure is reverse of removal.

Screen and Roller Assembly Installation for 100" to 164" Wide Screens

If your screen was shipped with the fabric and roller already installed, skip this section.

1. Remove access door. First remove the 2 screws from the ends (Figure 1). Be sure to support the door during this step to avoid injury. Lift the door slightly and pull away from the edge of the case.
2. Carefully unpack screen and roller assembly. Leave packing paper on roller.
3. Loosen (but do not remove) two 1/4-20 nuts securing the pin end bracket (stage left) to the case housing. Slide the bracket towards the end of the case.
4. Insert the spring end of the roller into the spring end bracket. The mounting brackets have a formed tab that the slat bar will rest against. Be sure to install the roller assembly so the slat bar is positioned onto the tab. (Figure 2).

   NOTE: The spring end has a brass paw that catches on a notch. This feature must be disabled on screens with CSR. Make sure the notch is pointing down towards the opening of the case.
5. Slide the pin end bracket onto the CSR pin. Tighten the 1/4-20 nuts securely.
6. Re-install the access door. Procedure is reverse of removal.

Operating 60" to 96" Wide Screens

1. Pull down on pull bail until desired picture area is obtained. Lock into position as on a window shade. Be sure surface is locked before releasing.
2. To re-roll the screen, pull the picture surface down and start the fabric up quickly and release.

Operating 100" to 164" Wide Screens

1. Pull down on pull bail until desired picture area is obtained. Lock into position as on a window shade. Be sure surface is locked before releasing.

   NOTE: this screen will not lock into position in the upper portion of its travel.
2. To re-roll the screen, pull the picture surface down about 6 inches and start the fabric up quickly and release.

Large picture surfaces are heavy and will start up too slowly to prevent the locking pawl from catching unless help is provided. If the locking pawl catches pull the picture surface down and start the surface up rapidly.

The CSR feature of this screen will allow the fabric to retract rapidly until about the last 6-12 inches of travel then it will slow and retract gently into the case.

Figure 1

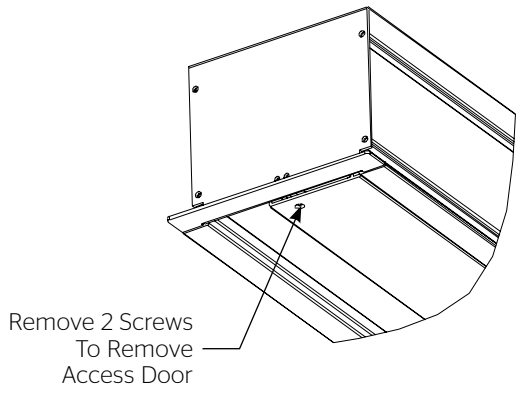

Figure 2

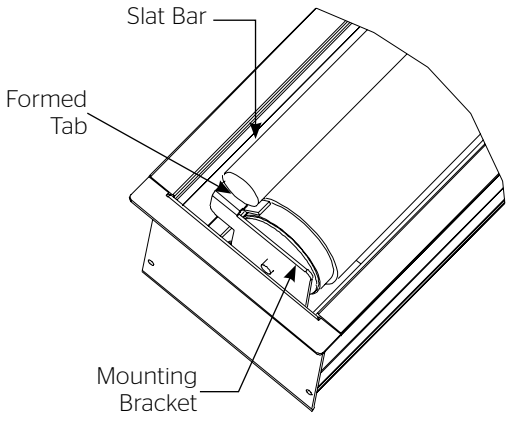

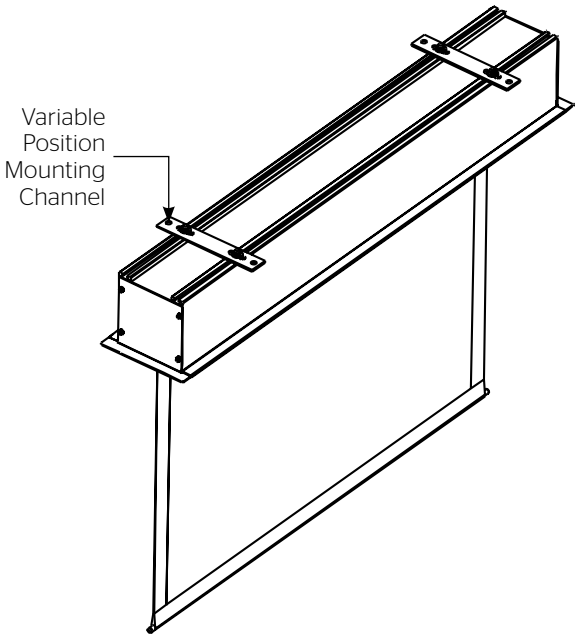
Variable
Position
Mounting
Channel

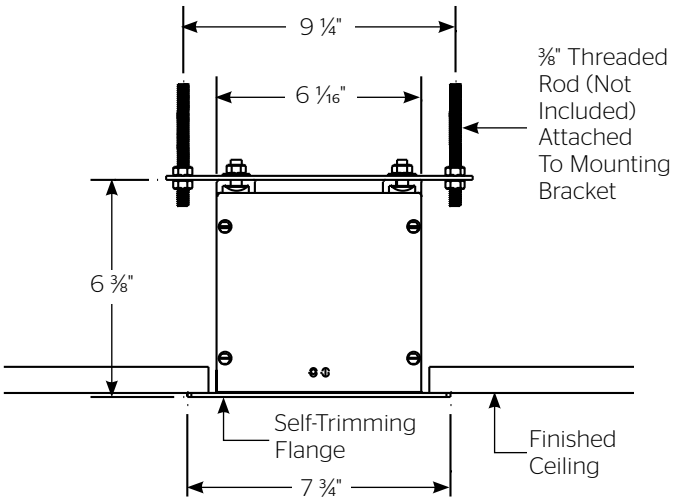
9 ¼"
6 1⁄16"
⅜" Threaded
Rod (Not
Included)
Attached
To Mounting
Bracket
6 ⅜"
Self-Trimming
Flange
Finished
Ceiling
7 ¾"

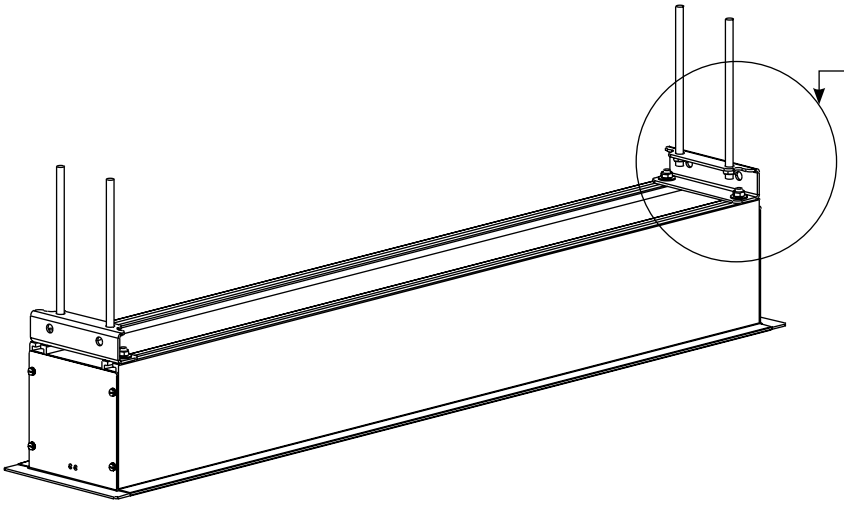
See Detail A

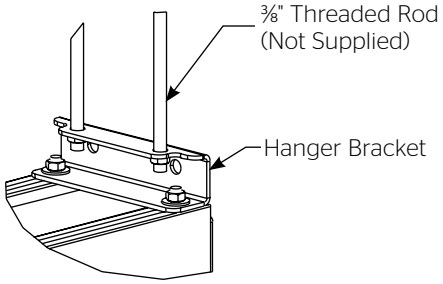
⅜" Threaded Rod
(Not Supplied)
Hanger Bracket

Detail A

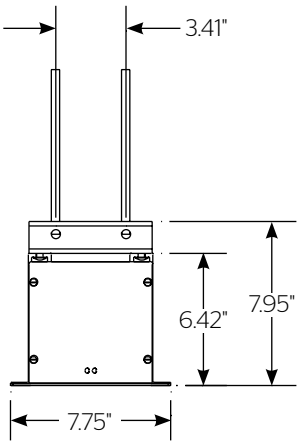
3.41"
6.42"
7.95"
7.75"

Troubleshooting

Symptom	Cause	Solution
Screen is retracting too slowly. Over 8 seconds retracting from the bottom into the case.	The CSR adjustment is not correct.	Retract screen completely, and then rotate CSR shaft 1/2 turn at a time counterclockwise.
Screen is retracting too fast. Under 3 seconds retracting from the bottom into the case.	The CSR adjustment is not correct.	Retract screen completely, and then rotate CSR shaft 1/2 turn at a time clockwise.
Screen is retracting too slowly, and then slams the case when adjusted counterclockwise.	The CSR unit (shock absorber) is too strong.	Reset the CSR unit. Call Da-Lite (800-622-3737) for detailed instructions.
Screen does not retract.	Retraction procedure*.	Pull the screen down, and then retract firmly and quickly.
	The CSR has been over adjusted counterclockwise.	The CSR unit is jammed. Reset or replace the CSR unit. Call Da-Lite (800-622-3737) for detailed instructions.
	The roller tube is bent and binding.	Replace the screen.
Screen does not stay down.	Locking procedure.	Pull the screen down, and then slowly retract until it locks.
	Dog is not locking.	Retract screen completely, and then rotate CSR shaft 1/2 turn counterclockwise.

LIMITED ONE YEAR WARRANTY ON DA-LITE PRESENTATION PRODUCTS

Legrand AV Inc. warrants certain Da-Lite branded products to the original purchaser only, to be free from defects in materials and workmanship for a period of one (1) year from the date of purchase by the original purchaser; provided they are properly operated according to Da-Lite's instructions and are not damaged due to improper handling or treatment after shipment from the factory.

Limited one-year warranty applies to the following products:

Cut-to-Size Screen Surface, Lace & Grommet Screen Surface, Series 200 Lace & Grommet Frame, Series 300 Lace & Grommet Frame, Advantage Manual with CSR, Model C, Model C with CSR, Floor Model C, Carpeted Floor Model C, Designer Contour Manual with CSR, Model B®, Model B with CSR, Scenic Roller, Heavy Duty-Fast-Fold Deluxe, Heavy Duty-Fast-Fold Deluxe Drapery Kits, Fast-Fold Truss, Fast-Fold Truss Drapery Kits, Pipe & Drapery Background System, Picture King®, Carpeted Picture King, Versatol®, Deluxe Insta-Theater®, Concord Lectern, Lexington Lectern, Equipment Rack Cart, PixMate Plastic Cart, Confident Monitor Stand, Project-O-Stand, Paper Pad Easel, A-Frame Easel, Designer Easel, and Display Easel.

This warranty does not apply to equipment showing evidence of misuse, abuse or accidental damage, or which has been tampered with or repaired by a person other than authorized Da-Lite personnel.

Da-Lite's sole obligation under this warranty shall be to repair or to replace (at Da-Lite's option) the defective part of the merchandise. Returns for service should be made to your Da-Lite dealer. If it is necessary for the dealer to return the screen or part to Da-Lite, transportation expenses to and from Da-Lite are payable by the purchaser and Da-Lite is not responsible for damage in shipment. To protect yourself against damage or loss in transit, insure the product and prepay all transportation expenses.

TO THE MAXIMUM EXTENT PERMITTED BY APPLICABLE LAW, THIS WARRANTY IS IN LIEU OF ALL OTHER WARRANTIES, EXPRESS OR IMPLIED, INCLUDING WARRANTIES AS TO FITNESS FOR USE AND MERCHANTABILITY. Any implied warranties of fitness for use, or merchantability, that may be mandated by statute or rule of law are limited to the one (1) year warranty period. This warranty gives you specific legal rights, and you may also have other rights, which vary from state-to-state. **TO THE MAXIMUM EXTENT PERMITTED BY APPLICABLE LAW, NO LIABILITY IS ASSUMED FOR EXPENSES OR DAMAGES RESULTING FROM INTERRUPTION IN OPERATION OF EQUIPMENT, OR FOR INCIDENTAL, DIRECT, OR CONSEQUENTIAL DAMAGES OF ANY NATURE.**

In the event that there is a defect in materials or workmanship of a Da-Lite product, you may contact Customer Care at 3100 North Detroit Street, Warsaw, IN 46582, (866) 977-3901.

IMPORTANT: THIS WARRANTY SHALL NOT BE VALID AND DA-LITE BRANDED PRODUCTS SHALL NOT BE BOUND BY THIS WARRANTY IF THE PRODUCT IS NOT OPERATED IN ACCORDANCE WITH THE DA-LITE WRITTEN INSTRUCTIONS.

Keep your sales receipt to prove the date of purchase and your original ownership.

DA-LITE®

FOR YOUR IMAGE | legrandav.com

USA	**P** 866.977.3901	**E** av.da-lite.support@legrand.com
CANADA	**P** 877.345.4329	**E** av.da-lite.support@legrand.com
EMEA	**P** +31 495 580 840	**E** av.emea.sales@legrand.com
APAC	**P** +852 2145 4099	**E** av.asia.sales@legrand.com

© 2020 Legrand AV Inc. DL-0281 Rev 3 1/20 Da-Lite is a registered trademark of Legrand AV Inc.
All other brand names or marks are used for identification purposes and are trademarks of their respective owners. All patents are protected under existing designations. Other patents pending.

legrand® | AV

COMMERCIAL BRANDS

Chief | Da-Lite | Middle Atlantic | Projecta | Vaddio