Coronis Uniti



User Guide

MDMC-12133

ENABLING BRIGHT OUTCOMES

Barco NV
Beneluxpark 21, 8500 Kortrijk, Belgium
www.barco.com/en/support
www.barco.com

Registered office: Barco NV
President Kennedypark 35, 8500 Kortrijk, Belgium
www.barco.com/en/support
www.barco.com

Table of contents

1 **Welcome!** 5
- 1.1 About the product 6
- 1.2 What's in the box 6

2 **Parts, controls and connectors** 7
- 2.1 Display front view 8
- 2.2 Display rear view 9
- 2.3 Accessories 10

3 **Display installation** 13
- 3.1 Removing the connector compartment cover 14
- 3.2 Unlocking the tilt mechanism 14
- 3.3 Unlocking the height mechanism 15
- 3.4 Adjusting the display position 16
- 3.5 Connecting the signal cables 17
- 3.6 Connecting the power cable 19
- 3.7 Mounting the film clip 20
- 3.8 Mounting the MultiTouchPad 20
- 3.9 Routing the cables & Reattach the connector compartment cover 21
- 3.10 Fixation of the foot on the desk 23
- 3.11 VESA-mount installation 23
- 3.12 First time starting up 26

4 **Daily operation** 27
- 4.1 Recommendations for daily operation 28
- 4.2 Key indicator lights 28
- 4.3 Standby switching 29
- 4.4 Bringing up the OSD menus 29
- 4.5 Navigating through the OSD menus 30
- 4.6 Overview of the functionality of the Left/Right keys 30
- 4.7 I-Luminate 31
- 4.8 Extended display keypad functions 31
  - 4.8.1 I-luminate mode 31
  - 4.8.2 Viewing mode 32

5 **Advanced operation** 33
- 5.1 OSD menu language 34
- 5.2 OSD menu automatic close function 34
- 5.3 Power LED 34
- 5.4 Key indicator lights 35
- 5.5 Power lock function 35

5.6 SoftGlow Task light ... 35
5.7 SoftGlow Wall light ... 36
5.8 DPMS mode ... 36
5.9 Hibernate ... 36
5.10 Delayed power down ... 37
5.11 I-Luminate default mode ... 37
5.12 I-Luminate film position ... 38
5.13 Luminance target ... 38
5.14 Color presets ... 39
5.15 Color temperature ... 39
5.16 Color coordinates ... 39
5.17 Viewing modes ... 40
5.18 Display functions ... 40
5.19 Ambient Light Compensation (ALC) ... 41
5.20 Reading rooms ... 41
5.21 Continuous ALC ... 42
5.22 Embedded QA ... 42
5.22.1 About Embedded QA ... 42
5.22.2 DICOM status report ... 43
5.22.3 DICOM compliance check ... 43
5.22.4 DICOM calibration ... 43
5.22.5 Reset DICOM calibration ... 44
5.22.6 DICOM error threshold ... 44
5.23 Image scaling ... 44
5.24 Image source selection modes ... 45
5.25 Grayscale conversion modes ... 45
5.26 Input interface standard version ... 46
5.27 EDID timings ... 46
5.28 Display info ... 46
5.29 Display status ... 47

6 Cleaning your display ... 49
6.1 Cleaning instructions ... 50

7 Repackaging instructions ... 51
7.1 Repacking your Coronis Uniti system ... 52

8 Important information ... 59
8.1 Safety information ... 60
8.2 Environmental information ... 61
8.3 Regulatory compliance information ... 63
8.4 EMC notice ... 64
8.5 Explanation of symbols ... 67
8.6 Legal disclaimer ... 68
8.7 Technical specifications ... 69
8.8 Open source license information ... 71

1 Welcome!

1.1 About the product

Overview

Thank you for choosing this Coronis Uniti!

Coronis Uniti is an ingenious PACS display system designed to enhance flexibility and productivity in diagnostic imaging. Featuring the industry's first 33-inch color LCD that can be used as two seamless heads or one wide-screen display, Coronis Uniti offers you the freedom to organize your workspace just the way you want it. It allows you to read radiology, mammography, and breast tomosynthesis images, side by side on a single diagnostic screen. Coronis Uniti features Barco Optical Glass illuminated by DuraLight Brilliance to provide an exceptional image over your entire field of view. Use the instructions in this guide to install your Coronis Uniti display and discover the productive features and included accessories!

CAUTION: Read all the important safety information before installing and operating your Coronis Uniti. Please refer to the dedicated chapter in this user guide.

1.2 What's in the box

Overview

Your Coronis Uniti comes with:

- this Coronis Uniti user guide
- Quick Installation Sheet
- a system CD
- two DisplayPort cables
- a USB cable
- a set of AC power cords
- an external power supply
- Film clip
- MultiTouchPad

If you ordered a Barco display controller, it's also in the box together with its accessories. A dedicated user guide is available on the system CD.

Keep your original packaging. It is designed for this display and is the ideal protection during transport and storage.

Parts, controls and connectors

2

2.1 Display front view

Overview

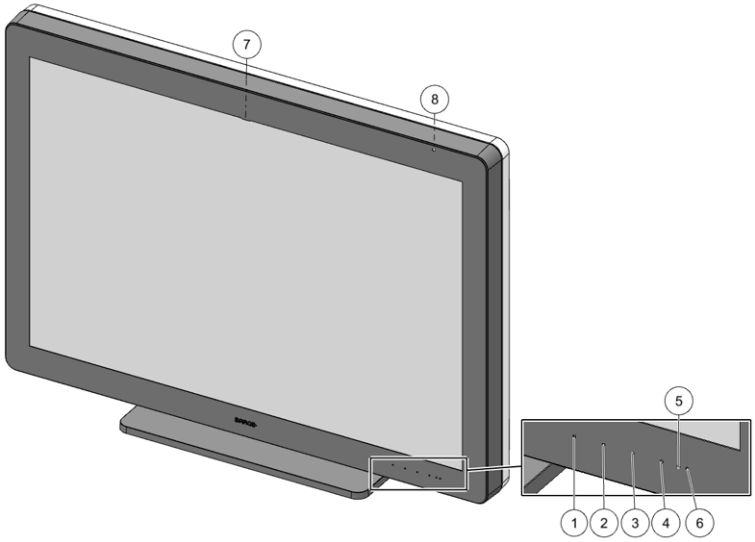

Image 2-1: Front view

1. I-Luminate/Left key
2. Right key
3. Menu key
4. Standby key
5. Power status indicator light (Power On)
6. Power status indicator light (Standby)
7. I-Guard
8. Ambient light sensor

2.2 Display rear view

Connector compartment cover closed

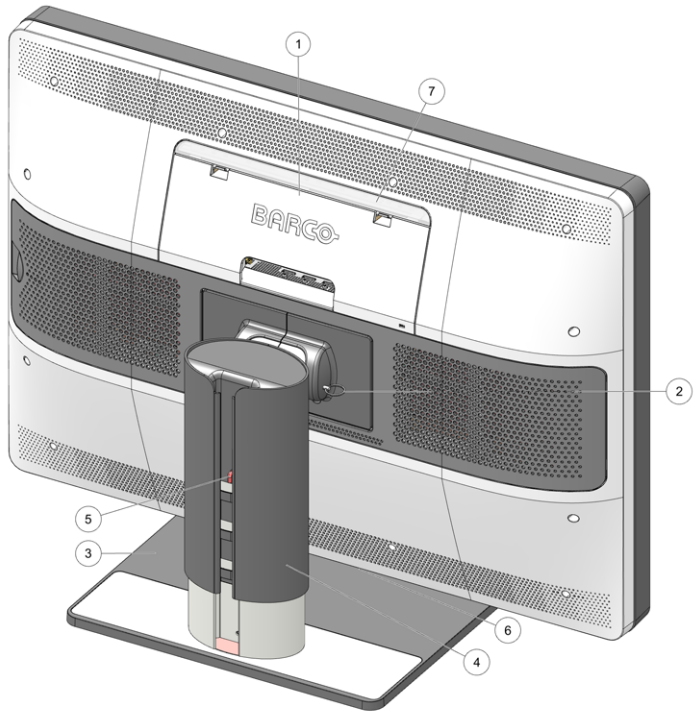

Image 2-2: Rear view with closed connector compartment cover

1. Connector compartment cover
2. Tilt lock pin (only for transportation)
3. Tilt & swivel foot
4. Cable duct
5. Foot lock pin (only for transportation)
6. SoftGlow Task light
7. SoftGlow Wall light

Store the foot lock pin and tilt lock pin for possible future transportation of the display.

Connector compartment cover open

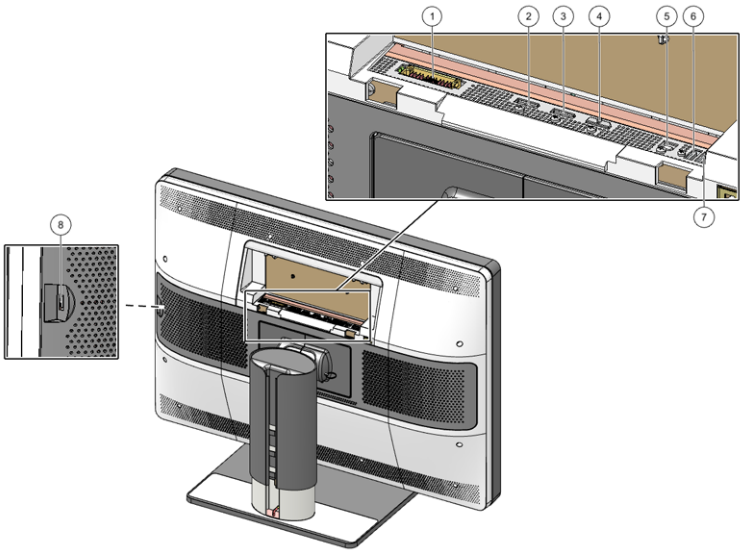

Image 2-3: Rear view with open connector compartment cover

1. Power connector
2. Display port connector
3. Display port connector
4. Not used
5. USB upstream connector
6. USB downstream connector (see tip below)
7. USB downstream connector (see tip below)
8. USB downstream connector (see tip below)

Please connect your keyboard or mouse to your PC rather than to the Uniti USB ports when hibernate is enabled (default setting). Please refer to “Hibernate”, page 36 to disable hibernation.

2.3 Accessories

Film clip

The film clip can be used to hold a radiological film when using the I-Luminate function as a light box.

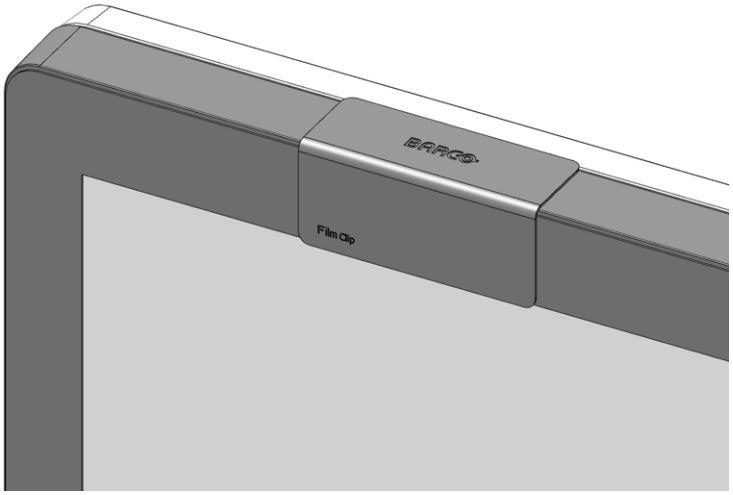

Image 2-4: Film clip

MultiTouchPad

The MultiTouchPad enables and controls SpotView.

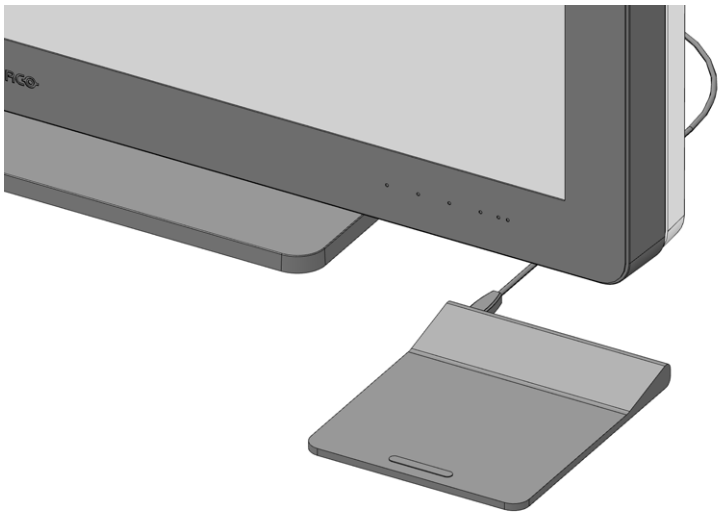

Image 2-5: MultiTouchPad

3 Display installation

Prior to installing your Coronis Uniti and connecting all necessary cables, make sure to have a suitable display controller physically installed in your computer. If you are using a Barco display controller, please consult the user guide delivered with it to do this.
For a list of compatible display controllers, please refer to the latest version of the compatibility matrix available on *my.barco.com* (MyBarco > My Support > Healthcare > Compatibility Matrices > Barco Systems Compatibility Matrices).

3.1 Removing the connector compartment cover

The connector compartment cover should be removed to get access to the connectors.

To remove the connector compartment cover

1. Gently push the two lips on the top of the cover.
2. Pull the top of the cover slightly away from the display and lift the cover upwards.

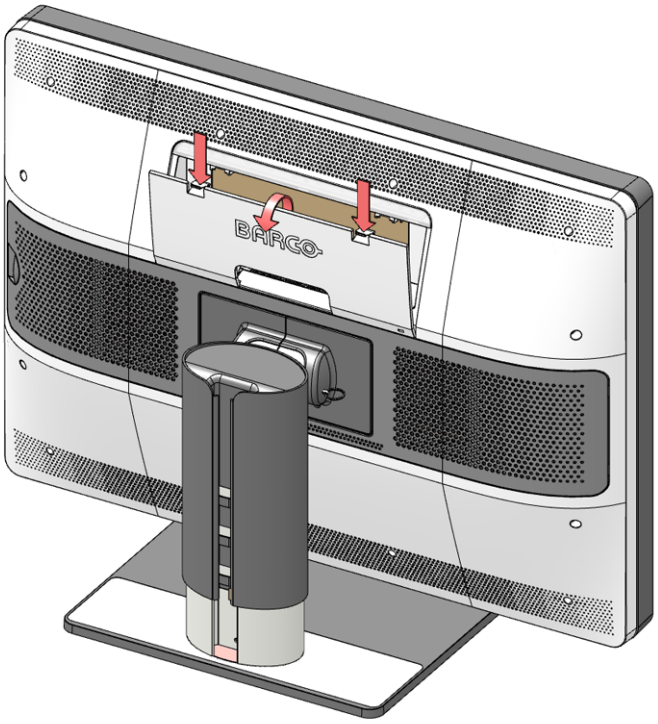

3. Remove the cover.

3.2 Unlocking the tilt mechanism

In the factory, the tilt system in the display stand is locked with a red pin to prevent damage during transportation. You'll have to remove this pin before adjusting your display position.

Push the display against the buffer part to easily remove the pin.

To remove the pin:

1. Position the display with its rear side facing you.
2. Pull out the red pin in the display stand.

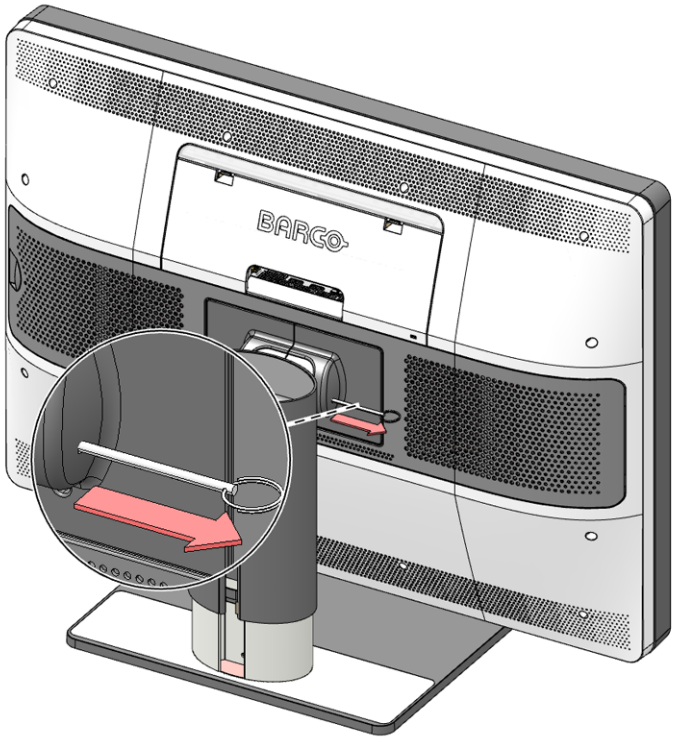

3. Keep the pin in case the display needs to be shipped later.

WARNING: Before transportation of the display, insert the pin in the lock mechanism so that the grey color of the pin isn't visible anymore.

3.3 Unlocking the height mechanism

In the factory, the height-positioning system in the display stand is locked with a red pin to prevent damage during transportation. You'll have to remove this pin before adjusting your display height position.

To remove the pin:

1. Position the display with its rear side facing you.
2. While holding the display panel pushed down, pull out the red pin in the display stand.

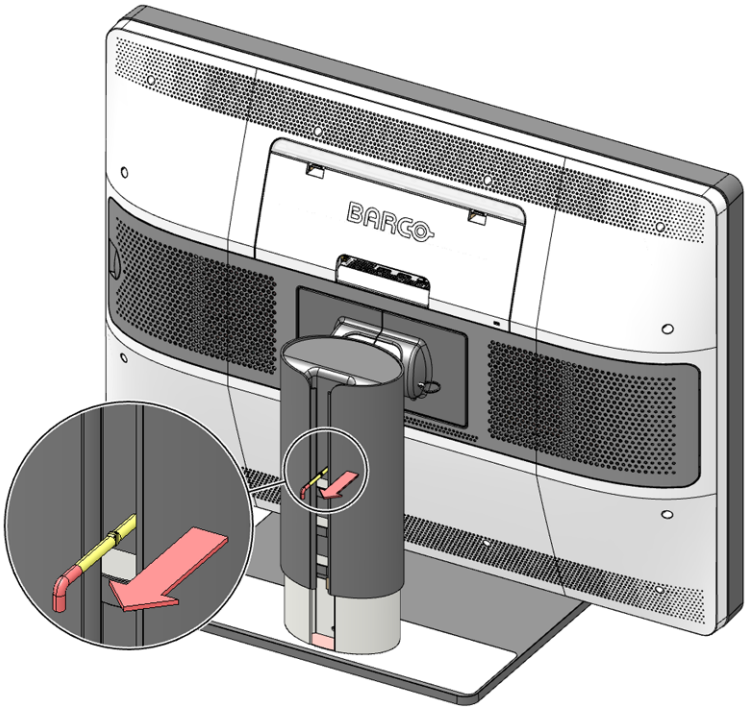

3. Keep the pin in the dedicated hole in case the display needs to be shipped later.

> To retain the pin for possible future transportation, insert the short, red end of the pin back into the stand of your display.

3.4 Adjusting the display position

> In the factory, the height-positioning and the tilt system in the display stand are locked with red pins to prevent damage during transportation. You'll have to remove both pins before adjusting your display position.

To adjust the display position

1. Remove the tilt lock pin, see "Unlocking the tilt mechanism", page 14.
2. Remove the height lock pin in the display stand, see "Unlocking the height mechanism", page 15.
3. Tilt, swivel, raise and lower the display as desired.

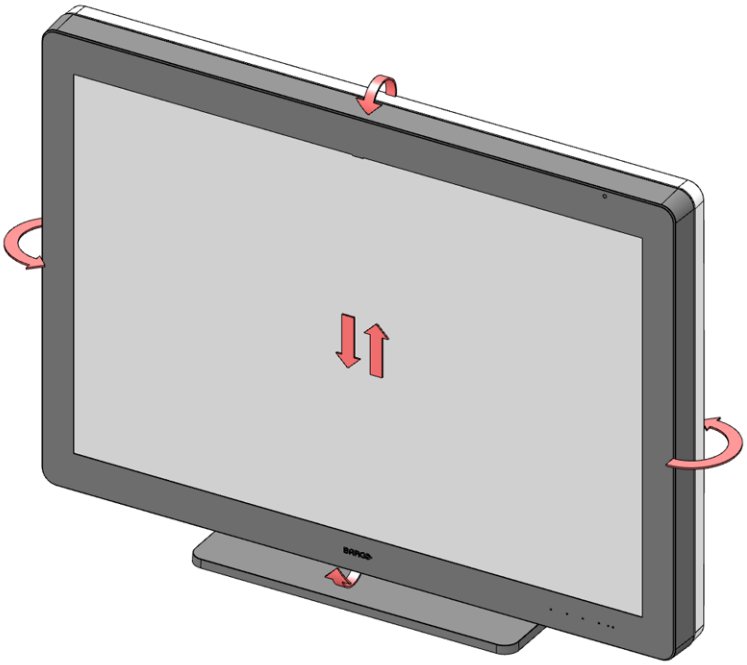

CAUTION: Do not try to pivot your display when attached to the stand. Trying to do so could cause serious damage to your display and its stand.

3.5 Connecting the signal cables

To get access to the connectors, remove the connector compartment cover. See “Removing the connector compartment cover”, page 14.

To connect the signal cables to the display:

1. Connect one head of the display controller to the DisplayPort connector with one of the supplied DisplayPort cables.

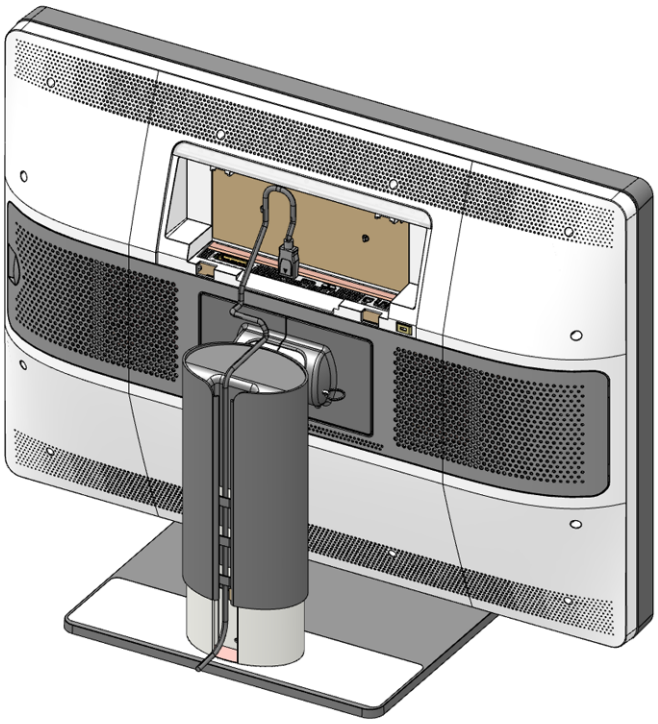

2. Connect another head of the display controller to the other DisplayPort connector with one of the supplied DisplayPort cables.

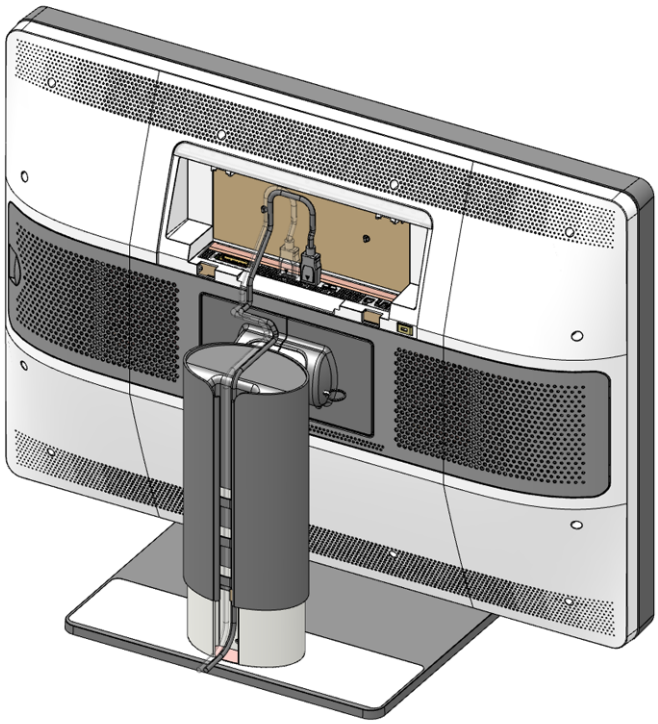

3. Connect a PC USB downstream connector to the display’s USB upstream connector by means of the supplied USB 2.0 cable.

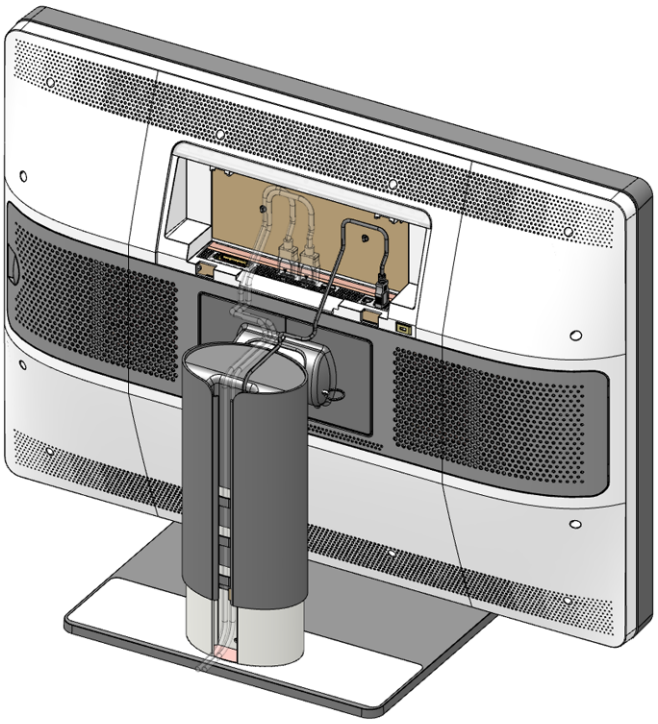

Please connect all your displays to their workstation with a USB cable to ensure undisturbed communication and to make optimal use of MediCal QAWeb and the Barco intuitive workflow tools.

3.6 Connecting the power cable

To connect the power cable to the display:

1. Connect the supplied external DC power supply to the +24 VDC power input of your Coronis Uniti display.

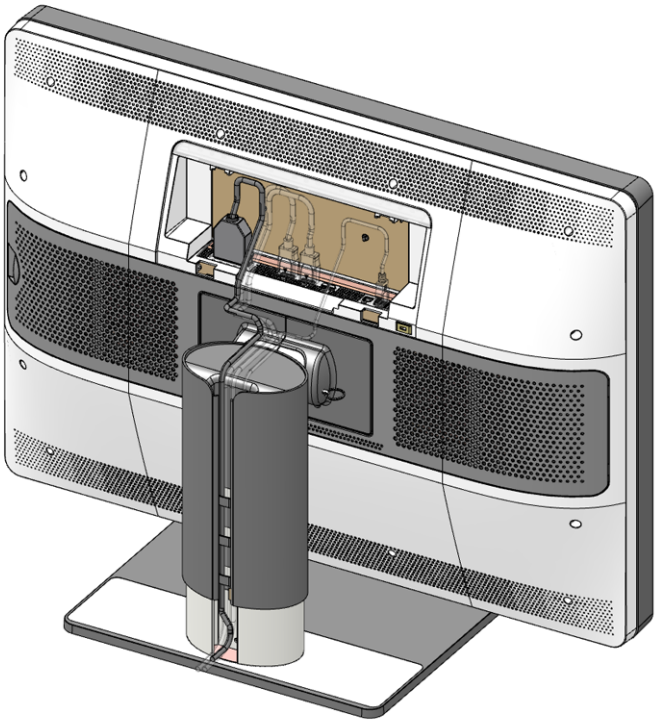

Warning: Fasten the power connector to your display with the screws provided at the sides of the connector.

2. Plug the other end of the external DC power supply into a grounded power outlet by means of the proper power cord delivered in the packaging.

Use the external power supply delivered with your display. If you do not use the correct power supply, the display will not start up.

3.7 Mounting the film clip

To mount the film clip

The film clip can be mounted on the top side of the display.

1. Position the film clip on the top side of the bezel at the desired location (in the middle, left or right).

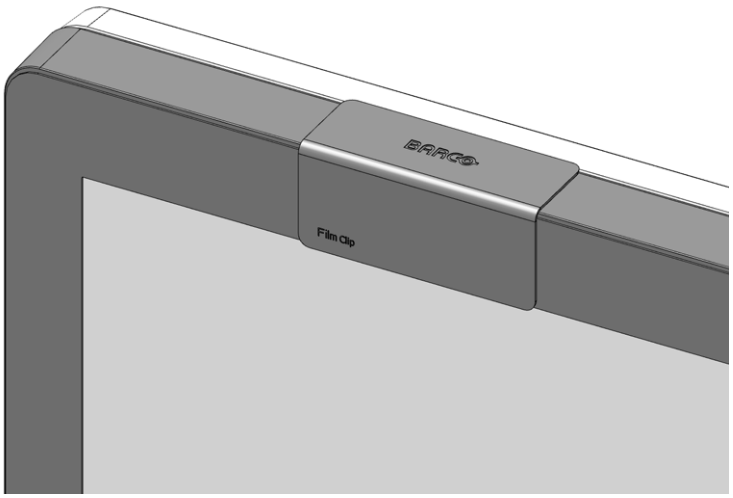

2. To remove the film clip, lift the front end or rear end of the clip.

3.8 Mounting the MultiTouchPad

To mount the MultiTouchPad

1. Connect the MultiTouchPad to one of the USB downstream connectors (using either those found in the cable compartment or on the right side of the display).

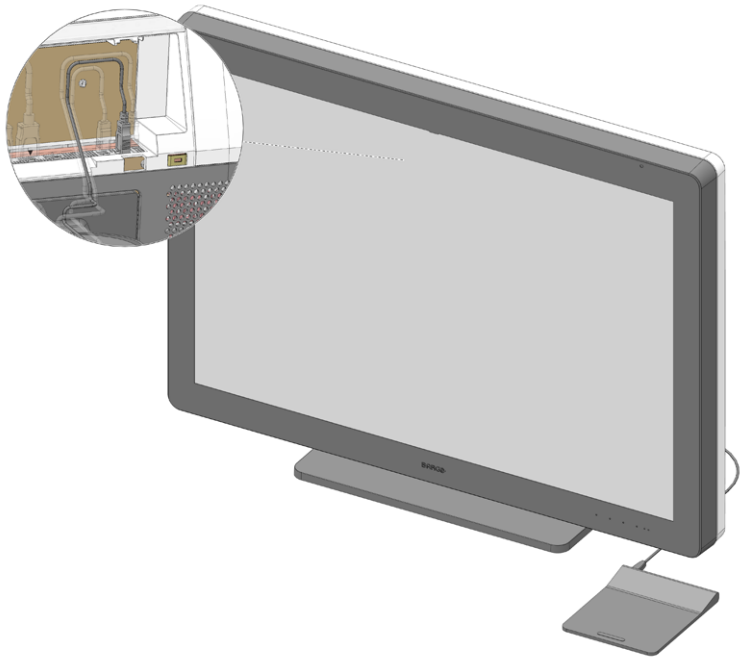

2. With the MultiTouchPad attached and the driver installed, simply press on the MultiTouchPad to move the focus on the SpotView around the display(s). The SpotView vanishes when no finger is pressing on the MultiTouchPad, unless the left side of the MultiTouchPad button is held down.

3.9 Routing the cables & Reattach the connector compartment cover

To route the cables

1. Route all connected cables through the cable routing channel in the stand of your display.

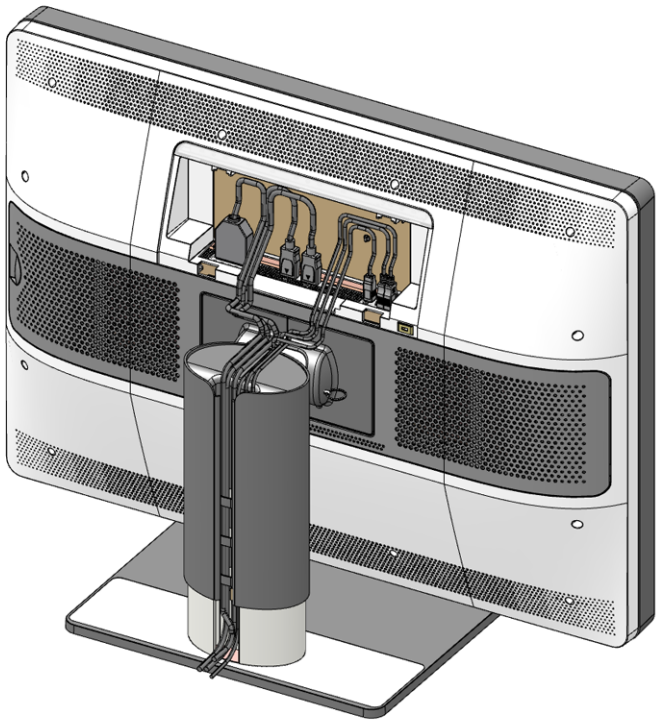

Tip: The cable straps at the inside of the connector compartment allow you to fix the cables for better shielding of the cables.

To reattach the connector compartment cover

1. Reattach the connector compartment cover by sliding the cover's top. You'll hear a “click” sound of the cover's clips when the connector compartment cover is in position.

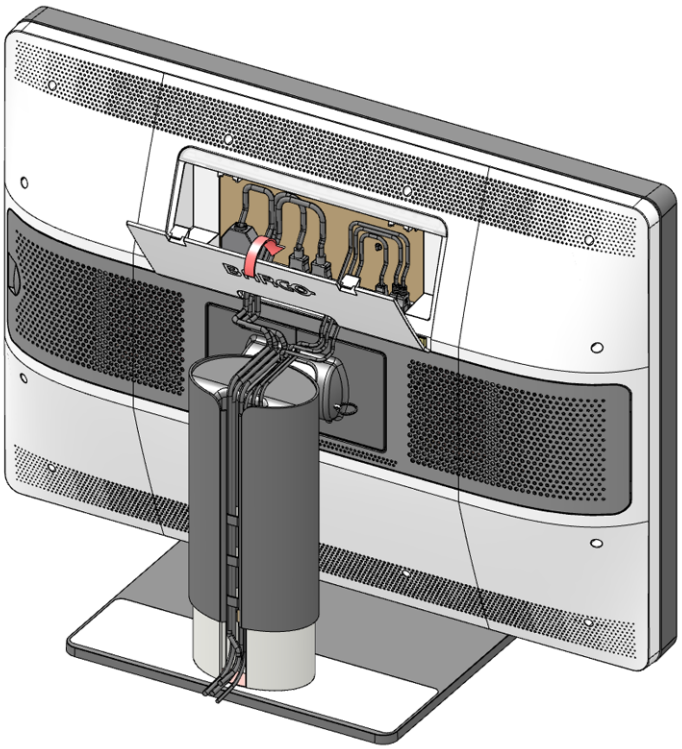

3.10 Fixation of the foot on the desk

Overview

If you would like to attach the Coronis Uniti to a desk, the tilt & swivel foot has 4 screw holes (4x M4) to mount the foot on a desk.

1. Drill four holes in the desk.

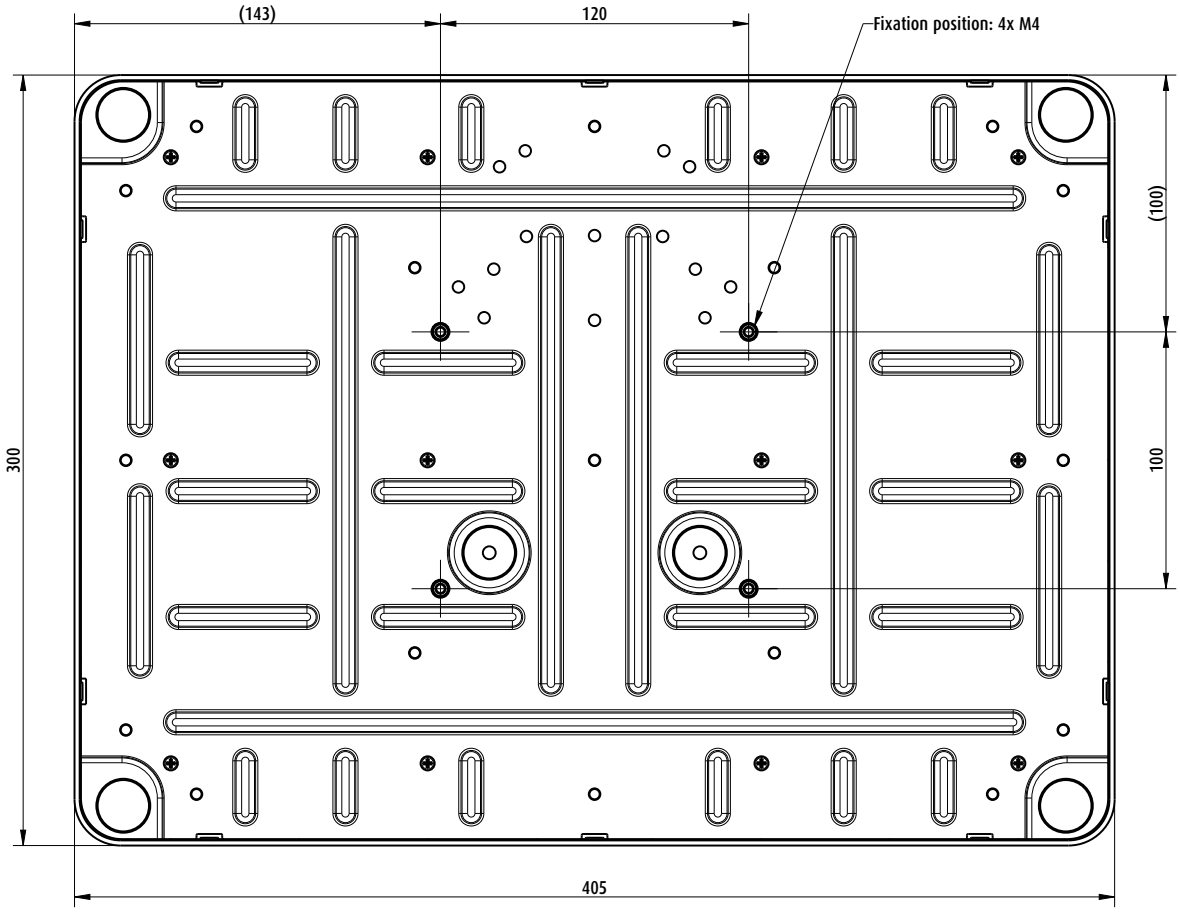

2. Fasten the foot on the desk with 4x M4 screws (length of the screws depending on the depth of the desk).

3.11 VESA-mount installation

CAUTION: Use suitable mounting apparatus to avoid risk of injury.

WARNING: Never move a display attached to an arm by pulling or pushing the display itself.
Instead, make sure that the arm is equipped with a VESA approved handle and use this to move the display.
Please refer to the instruction manual of the arm for more information and instructions.

WARNING: Use an arm that is approved by VESA (according to the VESA 200 x 100 mm or VESA 100 x 100 mm standard).
Use an arm that can support the weight of the display. Refer to the technical specifications of this display for the applicable weight.

CAUTION: You should mount the panel in landscape position. Portrait position is possible but not supported.

WARNING: To avoid muscle strain or back injury, use lifting aids and proper lifting techniques when removing or replacing.

Overview

The panel, standard attached to the tilt & swivel foot, is compatible with the VESA 200 x 100 mm and VESA 100 x100 mm standard. So it can be used with an arm stand according to the VESA 200 x 100 mm or VESA 100 x 100 mm standard.

Therefore, the tilt & swivel foot must be removed from the panel.

1. Fasten the height mechanism of the foot by putting the red pin in the hole “Unlocking the height mechanism”, page 15.
2. Put the display face down on a clean and soft surface. Be careful not to damage the panel screen.
3. Loosen the plastic covers with a cross head screwdriver.

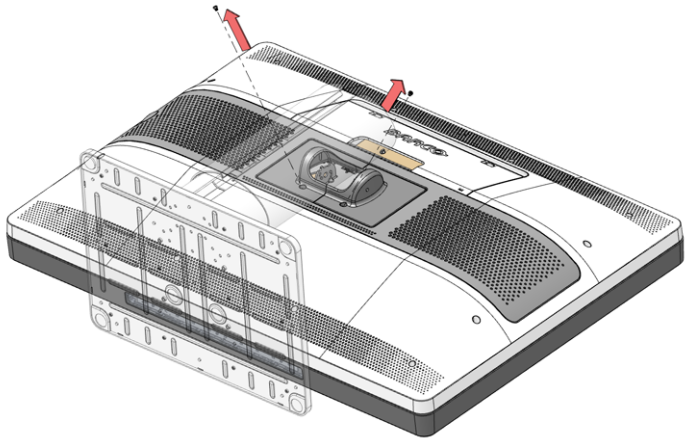

4. Remove the two plastic covers.

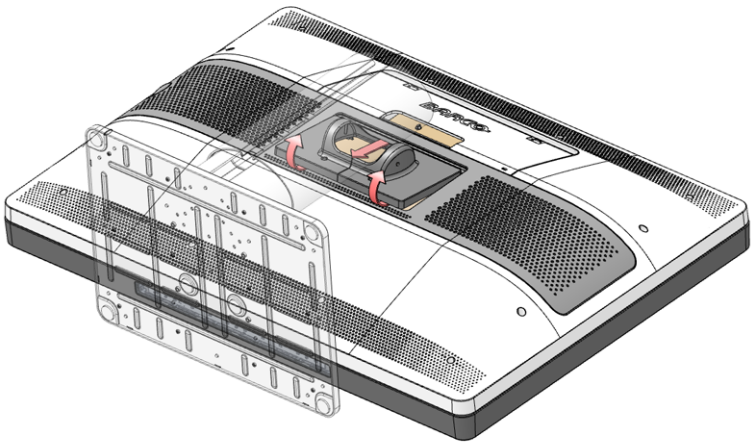

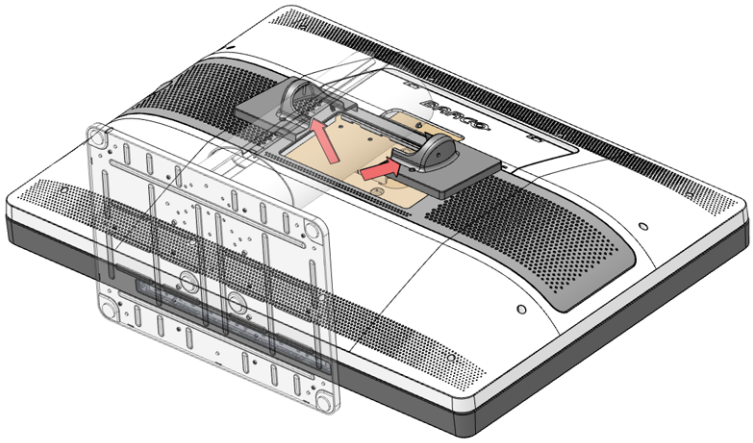

5. Remove the 9 screws fixing the foot while supporting the foot.

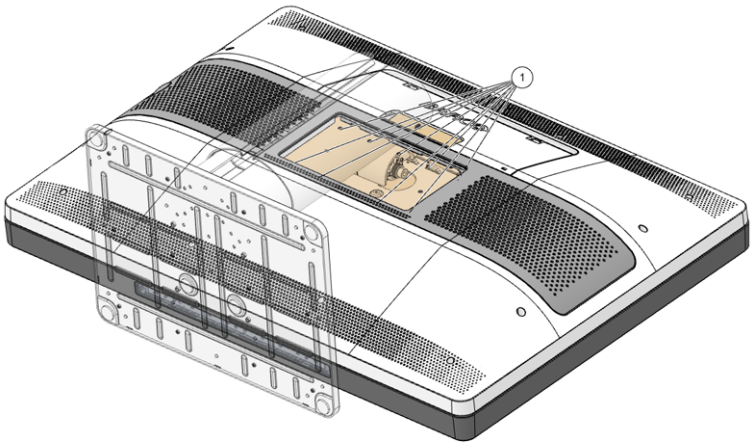

6. Attach the arm stand **firmly** to the panel using 6 screws M4 x 6 mm for a 200 x 100 mm VESA solution or 4 screws M4 x 6 mm for a 100 x 100 mm VESA solution.

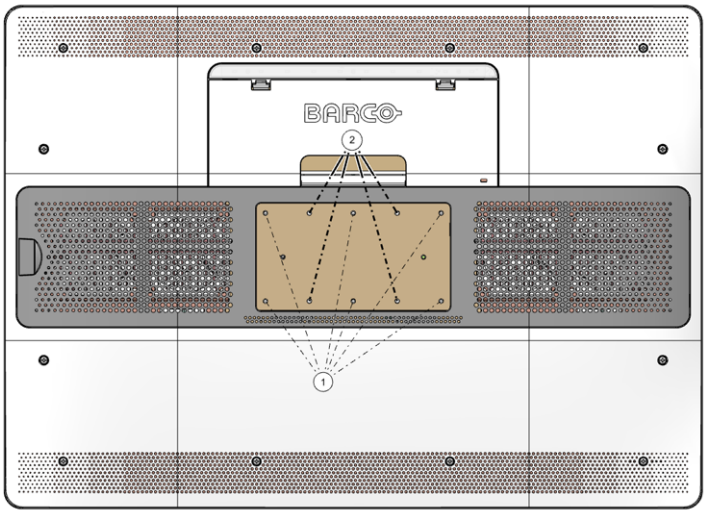

WARNING: Never move a display attached to an arm by pulling or pushing the display itself.
Instead, make sure that the arm is equipped with a VESA approved handle and use this to move the display.
Please refer to the instruction manual of the arm for more information and instructions.

3.12 First time starting up

Overview

You are now ready to start up your Coronis Uniti for the first time.

1. Switch on your Coronis Uniti as described in “Standby switching”, page 29.
2. Turn on the computer connected to your display.

If you have properly installed your display and display controller, the Windows start-up messages will appear once the boot procedure is finished.



Your Coronis Uniti display will be running in a basic video mode at a default refresh rate when first time starting up. If you are using a Barco display controller, please consult the dedicated user guide available on the system CD to install the drivers, software and documentation. When this is done, your display will automatically detect the connected video input signal(s) and apply the correct video mode and refresh rate.

4 Daily operation

4.1 Recommendations for daily operation

Optimize the lifetime of your display

Enabling the Display Power Management System (DPMS) of your display will optimize its diagnostic lifetime by automatically switching off the backlight when the display is not used for a specified period of time. By default, DPMS is enabled on your display, but it also needs to be activated on your workstation. To do this, go to “Power Options Properties” in the “Control Panel”.

Barco recommends to set DPMS activation 20 minutes after the display blanks.

Use a screen saver to avoid image retention

Prolonged operation of an LCD with the same content on the same screen area may result in a form of image retention.

You can avoid or significantly reduce the occurrence of this phenomenon by using a screen saver. You can activate a screen saver in the “Display properties” window of your workstation.

In case you are working with the same image or an application with static image elements (e. g. toolbars, icons) during almost a full working day continuously (so that the screen saver is not activated), allow the screen saver to activate afterwards and keep it running for 2 to 4 hours.

Barco recommends setting screen saver activation after 10 minutes of non-usage. A good screen saver displays moving content.

Understand pixel technology

LCD displays use technology based on pixels. As a normal tolerance in the manufacturing of the LCD, a limited number of these pixels may remain either dark or permanently lit, without affecting the diagnostic performance of the product. To ensure optimal product quality, Barco applies strict selection criteria for its LCD panels.

To learn more about LCD technology and missing pixels, consult the dedicated white papers available at *www.barco.com/healthcare*.

Enhance user comfort

Every Barco multi-head display system is color matched with the highest specifications in the market.

Barco recommends keeping color-matched displays together. Furthermore, it is important to use all displays of a multi-head configuration at the same rate to preserve color matching throughout the economic lifetime of the system.

Maximize quality assurance

The 'MediCal QAWeb' system offers online service for high-grade Quality Assurance, providing maximum diagnostic confidence and uptime.

Barco recommends to install MediCal QAWeb Agent and apply the default QAWeb policy at least. This policy includes calibration on regular intervals. Connecting to MediCal QAWeb Server offers even more possibilities.
Learn more and sign up for the free MediCal QAWeb Essential level at *www.barco.com/QAWeb*.

4.2 Key indicator lights

About the key indicator lights

By default, the indicator lights of the keys will be dimmed which makes the keys unavailable at that moment. To make the keys illuminate and available for further actions touch one of the keys. As a result, all keys will be

illuminated and are now available for further actions. However, if no further actions are taken within the following 5 seconds, the keys will dim again.

The I-Luminate/Left key is always lit and available for activation of the I-Luminate feature. Please refer to “I-Luminate”, page 31 for more information.

The key auto-dim function can be disabled in the OSD menus. Please refer to “Key indicator lights”, page 35 for detailed instructions on how to do this.

4.3 Standby switching

The connected power supply also provides a switch that can be used to turn the power completely off. To use the display, please make sure to switch on this power supply. This can be done by pushing the on/off switch on the power supply into the “ | ” position.

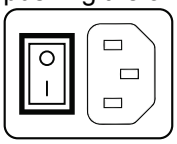

To switch your display on using the keys:

Switching on the display while it is in standby mode can be done by:

1. Push the standby key once.

As a result, the display will switch on and the **power status indicator** light is **white**.

During start-up phase, the orange indicator light and the white indicator light are lit, until the unit is fully started.

To switch your display to Stand-by using the keys:

Switching off the display can be done by:

1. Push the standby key shortly for three times. After the second push, the OSD message “Power off” appears on the display, this means the display will go in standby mode.

As a result, the display will switch to stand-by mode and the **power status indicator** light is **orange**.

In case of a power outage recovery, your display will always start-up in the power mode it was in before the power interruption (i.e. stand-by or on). This protects your display against inadvertent image retention problems.

4.4 Bringing up the OSD menus

How to bring up the OSD menus

The OSD menu allows you to configure different settings to make your Coronis Uniti fit your needs within your working environment. Also, you can retrieve general information about your display and its current configuration settings through the OSD menu.

Bringing up the OSD menus can be done by:

1. If not already done so, switch on the display as previously described.
2. Illuminate the keys as previously described.
3. While the keys are illuminated, touch the menu key.

As a result, the OSD main menu comes up. However, if no further actions are taken within the following 90 seconds, the OSD will disappear again.






The OSD menu auto-exit function can be disabled in the OSD menu. Please refer to “OSD menu automatic close function”, page 34 for detailed instructions on how to do this.

4.5 Navigating through the OSD menus

How to navigate through the OSD menus

Navigating through the OSD menus can be done by:

- Use the left/right keys to move through the (sub)menus, change values or make selections.
- To go into a submenu or confirm adjustments and selections, use the menu key.
- Use the standby key to cancel adjustments or exit a (sub)menu.
- Exit all OSD menus at once by touching the standby key for approximately 2 seconds.

The key icons are displayed above the keys, adapted to the function that it is used for (menu dependent).

I-Luminate is not available while the OSD menu is activated.

Overview key icons


Left, Right


Menu


Enter


Cancel


Standby (IEC 60417–5009)

4.6 Overview of the functionality of the Left/Right keys

Overview

Left key	Right key	Behavior			
Push	Push	Cycle viewing mode between text, diagnostic			
Push	No Push	Toggle on I-Luminate			
		Left key	Right key	Menu	Behavior
		Push	No push	No menu	Toggle off I-Luminate

Left key	Right key	Behavior			
		No push	Push	No menu	Cycle I-Luminate modes between text small film, large film, no film
		Push	Push	No menu	Cycle viewing mode between text and diagnostic, also toggle off I-Luminate
		No push	No push	Menu	Nothing
No Push	Push	Enable OSD			
		Left key	Right key	Menu	Behavior
		No push	Push	No menu	Cycle SoftGlow modes between task light, wall light, both, none.
		Push	No push	No menu	Nothing
		Push	Push	No menu	Cycle viewing mode between text and diagnostic
		No push	No push	Menu	Enter the OSD menu

4.7 I-Luminate

About I-Luminate

When the display is in power on mode and the OSD menu is not shown, I-Luminate can be activated by touching the I-luminate/left key.

When touching the I-Luminate key, the display will enter the I-Luminate mode, for approximately 1 minute. Touch the I-Luminate key again to immediately switch back to normal mode.

4.8 Extended display keypad functions

About extended display keypad functions

The concept of the extended display keypad functions is to present a selection of functions immediately available to the user without the need to navigate through the OSD Menu.



The extended display keypad functions will only be available when no OSD menu is visible on the screen.

4.8.1 I-luminate mode

To quickly change the I-luminate mode

1. While no OSD menu is on the screen, press the I-luminate/Left key to bring up the I-luminate quick selection menu.
2. Toggle the available I-luminate modes (see “I-Luminate default mode”, page 37) by pressing the Right key.

4.8.2 Viewing mode

To quickly change the viewing mode

1. While no OSD menu is on the screen, press the Left key and Right key simultaneously to change the viewing mode.
2. Toggle the available viewing modes (see “Viewing modes”, page 40) by pressing the Left/Right key simultaneously.

5 Advanced operation

5.1 OSD menu language

About the OSD menu language

By default, the OSD menu comes up in English. However, there's a wide range of other languages available for the OSD menu of your Coronis Uniti.

To change the language of the OSD menu:

1. Bring up the OSD main menu.
2. Navigate to the *Configuration* > *User Interface* > *Menu* menu.
3. Enter the *Language* submenu.
4. Select one of the available languages and confirm.

5.2 OSD menu automatic close function

About the OSD menu automatic close function

By default, the OSD menu will disappear automatically after approximately 90 seconds of inactivity. However, this function can be disabled so that the OSD menu remains on the screen until manually closed.

To enable/disable the OSD menu automatic close function:

1. Bring up the OSD main menu.
2. Navigate to the *Configuration* > *User Interface* > *Menu* menu.
3. Enter the *Automatic Close* submenu.
4. Select *Enabled/Disabled* as desired and confirm.

5.3 Power LED

About the power LED

To prevent distractions, the power LED is dimmed by default when the display is switched on and used in normal operation. This behavior can be changed so that the power LED will light up during normal operation. Below is an overview of the different power LED states, in ascending order of power consumption:

Display status	Power LED behavior
Off[1]	Dimmed
Hibernate[2] / Soft off[3]	Steady amber
Suspend mode[4]	Slow blinking amber
Standby mode[4]	Fast blinking amber
Normal operation	Dimmed (power LED disabled in OSD, default setting)
	Steady white (power LED enabled in OSD)

To enable/disable the power LED:

1. Bring up the OSD main menu.
2. Navigate to the *Configuration* > *User Interface* > *Indicator Lights* menu.
3. Enter the *Power Status* submenu.

1: Power supply unplugged or switched off.
2: Requires DPMS mode and Hibernate to be enabled in the OSD menu.
3: Switched off via the standby touch key.
4: Requires DPMS mode to be enabled in the OSD menu.

4. Select *Enabled/Disabled* as desired and confirm.

5.4 Key indicator lights

About the key indicator lights

By default, after lighting up, the key indicator lights will dim again if no further actions are taken within the following 5 seconds. However, this behavior can be changed so that the key indicator lights are always on or always off.

To configure the key indicator lights

1. Bring up the OSD main menu.
2. Navigate to the *Configuration* > *User Interface* > *Indicator Lights* menu.
3. Enter the *Keys* submenu.
4. Select *Automatic/Always On/Always Off* as desired and confirm.

5.5 Power lock function

About the power lock function

By enabling the power lock function, the Coronis Uniti is forced to remain switched on. This means that it can't be switched to stand-by mode manually until the power lock function is disabled again.

To enable/disable the power lock function:

1. Bring up the OSD main menu.
2. Navigate to the *Configuration* > *User Interface* > *Controls* menu.
3. Enter the *Power Lock* submenu.
4. Select *Enabled/Disabled* as desired and confirm.

5.6 SoftGlow Task light

About the SoftGlow Task light

The Coronis Uniti is equipped with a SoftGlow Task light. This allows you to have light on your desk in a dark environment. The brightness of the SoftGlow Task light can be adjusted.

To enable/disable the SoftGlow Task light:

1. Bring up the OSD main menu.
2. Navigate to the *Configuration* > *Lights* menu.
3. Enter the *SoftGlow Task Light* submenu.
4. Select *Enabled/Disabled* as desired and confirm.

To adjust the SoftGlow Task light brightness:

1. Bring up the OSD main menu.
2. Navigate to the *Configuration* > *Lights* menu.
3. Enter the *SoftGlow Task Light brightness* submenu.
4. Set a *SoftGlow Task Light brightness* value as desired and confirm.

5.7 SoftGlow Wall light

About the SoftGlow Wall light

The Coronis Uniti is equipped with a SoftGlow Wall light. This allows you to have light on the wall at the back of your display in a dark environment. The brightness of the SoftGlow Wall light can be adjusted.

To enable/disable the SoftGlow Wall light:

1. Bring up the OSD main menu.
2. Navigate to the *Configuration* > *Lights* menu.
3. Enter the *SoftGlow Wall Light* submenu.
4. Select *Enabled/Disabled* as desired and confirm.

To adjust the SoftGlow Wall light brightness:

1. Bring up the OSD main menu.
2. Navigate to the *Configuration* > *Lights* menu.
3. Enter the *SoftGlow Wall Light brightness* submenu.
4. Set a *SoftGlow Wall Light brightness* value as desired and confirm.

5.8 DPMS mode

About DPMS mode

Enabling the Display Power Management System (DPMS) mode on your display will optimize its diagnostic lifetime by automatically switching off the backlight when the display is not used for a specified period of time. By default, DPMS mode is enabled on your display, but it also needs to be activated on your workstation. To do this, go to the “Power options properties” window of your workstation.

Barco recommends setting DPMS activation after 20 minutes of non-usage.

When DPMS mode is enabled on your display, an additional OSD power saving function becomes available: hibernate. Please refer to “Hibernate”, page 36 for more information on hibernation and how to enable this function.

To enable/disable DPMS mode on your display:

1. Bring up the OSD main menu.
2. Navigate to the *Configuration* > *Power Management* menu.
3. Enter the *DPMS Mode* submenu.
4. Select *Enabled/Disabled* as desired and confirm.

5.9 Hibernate

About hibernate

When hibernate is enabled, not only the backlight will be switched off, but also other functionalities will be disabled to further reduce power consumption to a minimum. This happens after a specific period of time which can be manually adjusted.

Hibernate can only be enabled on your display when the DPMS mode is enabled first. Therefore, please refer to “DPMS mode”, page 36 to do this.

Please connect your keyboard or mouse to your PC rather than to the display's USB ports when hibernate is enabled.

To enable/disable hibernation on your display:

1. Bring up the OSD main menu.
2. Navigate to the *Configuration* > *Power Management* menu.
3. Enter the *Hibernate* submenu.
4. Select *Enabled/Disabled* as desired and confirm.

To specify the hibernate time-out:

1. Bring up the OSD main menu.
2. Navigate to the *Configuration* > *Power Management* menu.
3. Enter the *Hibernate Timeout* submenu.
4. Set the time-out value as desired and confirm.

5.10 Delayed power down

About delayed power down

Working with the same image or an application with static image elements (e.g. toolbars, icons) during almost a full working day continuously may result in a form of image retention. You can avoid or significantly reduce the occurrence of this phenomenon by enabling the delayed power down option.

This option will keep the display’s backlight running for 4 hours after DPMS mode is activated (instead of immediately switching off the backlight upon DPMS activation).

Enabling delayed power down is only effective when the DPMS mode is also enabled. Please refer to “DPMS mode”, page 36 to do this.

To enable/disable delayed power down on your display:

1. Bring up the OSD main menu.
2. Navigate to the *Configuration* > *Power Management* menu.
3. Enter the *Delayed Power Down* submenu.
4. Select *Enabled/Disabled* as desired and confirm.

5.11 I-Luminate default mode

About the I-Luminate default mode

The I-Luminate mode defines the default activated mode during the I-Luminate boost. This mode can be:

Screen	The boost mode is applied on the screen display.
Film (large or small)	Film (large or small): the boost mode activates a high illuminated rectangle on top of the screen, simulating a light box for use with radiological film. The size of this rectangle is similar to a classic (large or small) radiological film.

To set the I-Luminate mode:

1. Bring up the OSD main menu.
2. Navigate to the *Configuration* > *I-Luminate* menu.
3. Enter the *Default mode* submenu.
4. Select *Screen/Small Film/Large Film* as desired and confirm.

5.12 I-Luminate film position

About the I-Luminate film position

By default, the I-Luminate film rectangle comes up in the left side, top center of the screen. This position can be changed to one of the following options:

- *Left Side Top Left*
- *Left Side Top Center*
- *Left Side Top Right*
- *Right Side Top Left*
- *Right Side Top Center*
- *Right Side Top Right*
- *Hidden*: By selecting this option, the I-Luminate Film mode is disabled and will not be available when toggling the different I-Luminate modes. Only full screen I-Luminate is available in this case.

To set the I-Luminate film position:

1. Bring up the OSD main menu.
2. Navigate to the *Configuration* > *I-Luminate* menu.
3. Enter the *Film Position* submenu.
4. Select one of the available options and confirm.

5.13 Luminance target

About the luminance target

The luminance target of your Coronis Uniti is adjustable over a predefined range. When you change the luminance target, the display will adjust its backlight to reach the target.

To set the luminance target:

1. Bring up the OSD main menu.
2. Navigate to the *Configuration* > *Calibration* menu.
3. Enter the *Luminance Target* submenu.
4. Set a luminance target value as desired and confirm.



The default, factory DICOM calibrated luminance value is available in the technical specifications table. The guaranteed backlight lifetime is valid for this setting.

5.14 Color presets

About color presets

The available color preset settings for your display are:

- **Clearbase:** Simulation of the clearbase film color temperature.
- **Bluebase:** Simulation of the bluebase film color temperature.
- **User:** When selecting the User color temperature setting, you will be able to manually define the X and Y coordinates or the display color temperature in separate submenus.
- **Native White:** The native, unmodified color temperature of the LCD panel.

To select a color preset:

1. Bring up the OSD main menu.
2. Navigate to the *Configuration* > *Calibration* > *Color Settings* menu.
3. Enter the *Color Presets* submenu.
4. Select one of the available Color Presets and confirm.

5.15 Color temperature

About color temperature:

It is possible to change the color temperature of your display.

Color temperature can only be changed on your display when color presets is set to *User*. Please refer to “Hibernate”, page 36 to do this.

To change the color temperature:

1. Bring up the OSD main menu.
2. Navigate to the *Configuration* > *Calibration* > *Color Settings* menu.
3. Enter the *Color Definition* submenu.
4. Select Color Temperature and confirm.
5. Enter the *Color Temperature* submenu.
6. Set the Temperature value as desired and confirm.

5.16 Color coordinates

About color coordinates:

It is possible to change the color coordinates of your display.

Color coordinates can only be changed on your display when color presets is set to *User*. Please refer to “Hibernate”, page 36 to do this.

To change the color coordinates:

1. Bring up the OSD main menu.
2. Navigate to the *Configuration* > *Calibration* > *Color Settings* menu.
3. Enter the *Color Definition* submenu.
4. Select Color Coordinates and confirm.

5. Enter the *x and/or y* submenu.
6. Set the coordinate value for x and/or y as desired and confirm.

5.17 Viewing modes

About viewing modes

The Coronis Uniti can be used in two viewing modes:

- **Diagnostic:** This mode provides the full calibrated luminance and is intended for using the display for diagnostic purposes.
- **Text:** In this mode, the luminance is reduced to approximately half of the luminance. This is intended for using the display with office applications such as word processing.
  Please note that text mode is not persistent, once powered off, the unit will restart in diagnostic mode.

To quickly switch the viewing mode without having to enter the OSD menu, touch the left and right key at the same time during normal operation.

The diagnostic mode should always be selected when the Coronis Uniti is intended to be used in a diagnostic environment.

To select a viewing mode:

1. Bring up the OSD main menu.
2. Navigate to the *Configuration* > *Calibration* menu.
3. Enter the *Viewing Mode* submenu.
4. Select *Diagnostic/Text* as desired and confirm.

5.18 Display functions

About display functions

Native, uncorrected panels will display all grayscale/color levels with luminance increments that are not optimal for crucial diagnostic information. Studies have shown however, that in medical images certain grayscale/color parts contain more diagnostic information then others. To respond to these conclusions, display functions have been defined. These functions emphasize on these parts containing crucial diagnostic information by correcting the native panel behavior.

The available display functions for your Coronis Uniti are:

- **Native:** If you select Native, the native panel behavior will not be corrected.
- **Dynamic Gamma 1.8** or **2.2**: These are gamma functions that are shifted to take into account the non-zero luminance of an LCD panel when driven with a “black” signal. They are especially useful in CT applications to improve the perception of low Hounsfield values.
- **DICOM:** DICOM (Digital Imaging and Communications in Medicine) is an international standard that was developed to improve the quality and communication of digital images in radiology. In short, the DICOM display function results in more visible grayscales in the images. Barco recommends selecting the DICOM display function for most medical viewing applications.
- **User:** This display function will be automatically selected when display functions are defined by MediCal QAWeb.
- **Gamma 1.8** or **2.2**: Select one of these display functions in case the display is to replace a CRT display with a gamma of 1.8 or 2.2 respectively.

The settings of the display must be adapted to suit the requirements of the visualization software. In case of doubt, please contact the vendor of the visualization software.

To select a display function:

1. Bring up the OSD main menu.
2. Navigate to the *Configuration* > *Calibration* menu.
3. Enter the *Display Function* submenu.
4. Select one of the available display functions and confirm.

5.19 Ambient Light Compensation (ALC)

About ALC

Ambient Light Compensation (ALC) can only be enabled on your display when the DICOM display function is selected. Therefore, please refer to “Display functions”, page 40 to correctly set the display function.

When ALC is enabled, the DICOM display function will be recalculated taking a preset ambient light correction value into account. This value is determined by the selected reading room. Therefore, it is also important to select a realistic reading room when enabling ALC. This can be done by following the instructions in “Reading rooms”, page 41.

To enable/disable ALC:

1. Bring up the OSD main menu.
2. Navigate to the *Configuration* > *Calibration* > *Ambient Light* menu.
3. Enter the *Ambient Light Compensation* submenu.
4. Select *Enabled/Disabled* as desired and confirm.

5.20 Reading rooms

About reading rooms

Reading rooms can only be selected when the DICOM display function is selected. Therefore, please refer to “Display functions”, page 40 to correctly set the display function.

The American Association of Physicists in Medicine (AAPM) composed a list of pre-defined reading rooms. Each of these reading rooms are defined by following parameters:

- the maximum light allowed in this type of room
- the preset ambient light correction value for this reading room

These parameters are stored in your display and determine the preset ambient light correction value to take into account to recalculate the DICOM display function when Ambient Light Compensation (ALC) is enabled. Please refer to “Ambient Light Compensation (ALC)”, page 41 to enable ALC.

The available reading rooms for your Coronis Uniti are:

- **CR/DR/ MAMMO:** Corresponds to light conditions in diagnostic reading rooms for computed radiology, digital radiology or mammography. This setting has the lowest maximum ambient light.
- **CT/MR/NM:** Corresponds to light conditions in diagnostic reading rooms for computed tomography, magnetic resonance or nuclear medicine scans.
- **Staff Office:** Corresponds to light conditions in office rooms.
- **Clinical Viewing Room:** Corresponds to light conditions in diagnostic reading rooms for clinical viewing.
- **Emergency Room:** Corresponds to light conditions in emergency rooms.
- **Operating Room:** Corresponds to light conditions in operating rooms. This setting has the highest maximum ambient light.

To select a reading room:

1. Bring up the OSD main menu.
2. Navigate to the *Configuration* > *Calibration* > *Ambient Light* menu.
3. Enter the *Reading Room* submenu.
4. Select one of the available reading rooms and confirm.

5.21 Continuous ALC

About Continuous ALC

Continuous ALC can only be selected when the DICOM display function is selected. Therefore, please refer to “Display functions”, page 40 to correctly set the display function.

Enabling continuous ALC will continuously recalculate the DICOM display function taking the averaged ambient light into account.

To select continuous ALC:

1. Bring up the OSD main menu.
2. Navigate to the *Configuration* > *Calibration* > *Ambient Light* menu.
3. Enter the *Continuous ALC* submenu.
4. Select *Enabled/Disabled* as desired and confirm.

5.22 Embedded QA

Overview

- About Embedded QA
- DICOM status report
- DICOM compliance check
- DICOM calibration
- Reset DICOM calibration
- DICOM error threshold

5.22.1 About Embedded QA

About

Embedded QA allows you to run a display calibration or compliance test directly from the display using the OSD menus described in the next sections. Embedded QA will use the front sensor / I-Guard to measure the necessary luminance levels for either a calibration or compliance test. Various settings for both actions can be selected from the display’s OSD menu. The last results of both actions can be consulted from the OSD.

Embedded QA or MediCal QAWeb?

Embedded QA is not a replacement for the Barco MediCal QAWeb solution.

Although Embedded QA is a reliable option to perform a simple calibration or compliance test, Barco still highly recommends MediCal QAWeb as the solution of choice for calibration and QA. Medical QAWeb brings many benefits such as centralized asset management, the ability to schedule tasks, remote management, automated reporting, alerting and specific support of regional QA standards such as DIN 6868-57, JESRA and AAPM TG18. That's why MediCal QAWeb Agent acts as the master for all supported displays from the moment it is installed and running. MediCal QAWeb Agent will take over from Embedded QA and overwrite any settings which were applied by Embedded QA.

5.22.2 DICOM status report

About DICOM status report

Following information is available:

DICOM Compliance Status (status since last compliance check)

- **Compliance status:** Shows if the current DICOM curve is compliant or not.
- **Maximum error:** Shows the maximum error of the current DICOM curve. This is the deviation compared to a perfect DICOM.
- **Error threshold:** Shows the error threshold. This is the maximum error allowed before a DICOM calibration is required.
- **Time elapsed since latest compliance check:** Shows the backlight runtime since last compliance check.
- **Display Function:** Shows the current display function.
- **Ambient light compensation:** Shows the ambient light compensation status.
- **Reading Room:** Shows the selected reading room.
- **Luminance:** Shows the measured luminance.
- **Black luminance:** Shows the measured black luminance.

DICOM Calibration Status

- **No calibration executed yet:** No other information is visible
- **Calibration executed:** When the calibration is executed, the following extra information is shown: Time elapsed since latest calibration, Display Function, Ambient Light Compensation and Reading Room.

Current DICOM Settings

- **Display Function:** Shows the current display function.
- **Ambient Light Compensation:** Shows the ambient light compensation status.
- **Reading room:** Shows the selected reading room.

To retrieve the DICOM status report:

1. Bring up the OSD main menu.
2. Navigate to the *Configuration* > *Calibration* > *Embedded QA* menu.
3. Select *DICOM Status Report* to make the information visible on the screen.

5.22.3 DICOM compliance check

About DICOM compliance check

The DICOM compliance check will measure the DICOM curve of your display in different steps. After measurement, the DICOM status report is shown.

To start DICOM compliance check:

1. Bring up the OSD main menu.
2. Navigate to the *Configuration* > *Calibration* > *Embedded QA* menu.
3. Select *DICOM Compliance Check* to start the compliance check.

Warning: Pressing a key during the compliance check will abort the check.

5.22.4 DICOM calibration

About DICOM calibration

The DICOM calibration will add a correction to the current DICOM curve to approach the perfect DICOM curve as well as possible.

To start DICOM calibration:

1. Bring up the OSD main menu.

2. Navigate to the *Configuration* > *Calibration* > *Embedded QA* menu.
3. Select *DICOM calibration* to start the calibration.

Warning: Pressing a key during calibration will abort the calibration, previous values will be restored.

Note: After calibration, the compliance check will start automatically.

5.22.5 Reset DICOM calibration

About reset DICOM calibration

It is possible to restore the original (not corrected) DICOM curve.

To reset the DICOM calibration:

1. Bring up the OSD main menu.
2. Navigate to the *Configuration* > *Calibration* > *Embedded QA* menu.
3. Enter the *DICOM Preferences* submenu.
4. Select *Reset DICOM Calibration* to restore the original (not corrected) DICOM curve.

5.22.6 DICOM error threshold

About DICOM error threshold

The threshold to define the DICOM compliance can be modified in steps of 5% starting from 5 to 30%. When the maximum deviation is not bigger than the selected threshold, the compliance check will be OK.

To set the DICOM error threshold:

1. Bring up the OSD main menu.
2. Navigate to the *Configuration* > *Calibration* > *Embedded QA* menu.
3. Enter the *DICOM Preferences* submenu.
4. Set *Error Threshold* as desired and confirm.

5.23 Image scaling

About image scaling

Enabling image scaling will copy each individual pixel to one or more adjacent pixels so that the size of the displayed image will be a multiple of the original image source video input signal.

Image scaling is only possible when the resolution of your display's video input signal is less than or equal to half the maximum resolution of the display.

To enable/disable image scaling:

1. Bring up the OSD main menu.
2. Navigate to the *Configuration* > *Image Source* menu.
3. Enter the *Scaling* submenu.
4. Select *Enabled/Disabled* as desired and confirm.

5.24 Image source selection modes

About image source selection modes

Your Coronis Uniti automatically detects the number of video input signals connected, attaches them to the correct display side and applies the correct video settings to it (resolution, video encoding mode, refresh rate,...). However, it may be needed to manually select the video input signal(s) to be displayed on a certain display side or to adjust certain video settings yourself. The start to this is selecting one of the following image source selection modes available for your display:

- **Automatic:** In this mode, your display automatically detects the connected video input signals, attaches them to the correct display side and applies the correct video settings to it (resolution, video encoding mode, refresh rate,...). No video settings are available when this mode is selected.
- **One Image Source:** This mode is intended for displaying and manually configuring only one connected video input signal. When selecting this mode, the video settings become available for the selected video input signal.
- **Two Image Sources:** This mode is intended for displaying and manually configuring two connected video input signals (one on each display side). When selecting this mode, the video settings become available for the selected video input signal on each side of the display.
- **Expert mode:** This mode is intended for displaying and manually configuring one or two connected video input signals. When selecting this mode, the video settings become available for both video input signals on both sides of the display.

To select an image source selection mode:

1. Bring up the OSD main menu.
2. Navigate to the *Configuration* > *Image Sources* menu.
3. Enter the *Image Source Selection* submenu.
4. Select one of the available image source selection modes and confirm.

5.25 Grayscale conversion modes

About grayscale conversion modes

Grayscale conversion modes specify how color generated on the display controller is converted to grayscale in your display.

The available grayscale conversion modes are:

No Conversion	
Use Red Channel	This mode is intended for grayscale displays where gray is sent over the red channel.
Use Green Channel	This mode is intended for grayscale displays where gray is sent over the green channel.
Use Blue Channel	This mode is intended for grayscale displays where gray is sent over the blue channel.

To manually select a grayscale conversion mode:

1. Bring up the OSD main menu.
2. Navigate to the *Configuration* > *Image Sources* > *Input Settings* > *DisplayPort1/2* menu.
3. Enter the *Grayscale Conversion* submenu.
4. Select one of the available color conversion modes and confirm.

5.26 Input interface standard version

About Input interface standard version

The Coronis Uniti supports 2 input interface standard versions: DPCD V1.1 and DPCD V1.2

To select the Input interface standard version

1. Bring up the OSD main menu.
2. Navigate to the *Configuration* > *Image Sources* > *Input Settings* > *DisplayPort1/2* menu.
3. Enter the *Input Interface Standard Version* submenu.
4. Select one of the available versions and confirm.

To obtain full resolution and full refresh rate, DPCD V1.2 should be selected.

5.27 EDID timings

About EDID timings

Following EDID timings are available for your Coronis Uniti:

Refresh Rate	Allows to manually select the refresh rate of the image source video input signal depending on the maximum refresh rate of the display controller connected to your display.
Color Depth	Allows to change the color depth to 8 or to 10 bit.

To manually set EDID timings:

1. Bring up the OSD main menu.
2. Navigate to the *Configuration* > *Image Sources* > *Input Settings* > *DisplayPort 1/2* menu.
3. Enter the *EDID* submenu.
4. Select *Resolution, Refresh Rate, Preferred Orientation* or *Color Depth*.
5. Select one of the available settings and confirm.

5.28 Display info

About display info

Your display serial number, native resolution, firmware versions, etc. are available in a dedicated submenu of the OSD menu.

To retrieve info about your display:

1. Bring up the OSD main menu.
2. Navigate to the *About this Display* menu to make the information visible on the screen.

5.29 Display status

About display status

The Status submenu of the OSD menu provides info on the current status of your display (runtimes, temperatures, etc.), the status of the connected image sources (video encoding mode, timings, etc.) and the current calibration status of your display (display function, luminance, ALC, etc.).

To retrieve the status of your display:

1. Bring up the OSD main menu.
2. Navigate to the *Status* menu.
3. Enter the *Display, Image Sources* or *Calibration* submenu as desired.

Cleaning your display

6

6.1 Cleaning instructions

To clean the display

Clean the display using a sponge, cleaning cloth or soft tissue, lightly moistened with a recognized cleaning product for medical equipment. Read and follow all label instructions on the cleaning product. In case of doubt about a certain cleaning product, use plain water.

Do not use following products:

- Alcohol/solvents at higher concentration > 5%
- Strong alkalis lye, strong solvents
- Acid
- Detergents with fluoride
- Detergents with ammonia
- Detergents with abrasives
- Steel wool
- Sponge with abrasives
- Steel blades
- Cloth with steel thread

CAUTION: Take care not to damage or scratch the front glass or LCD. Be careful with rings or other jewelry and do not apply excessive pressure on the front glass or LCD.

CAUTION: Do not apply or spray liquid directly to the display as excess liquid may cause damage to internal electronics. Instead, apply the liquid to a cleaning cloth.

Repackaging instructions

7

7.1 Repacking your Coronis Uniti system

How to repack your Coronis Uniti system

1. Insert the connector cover in the small buffer.

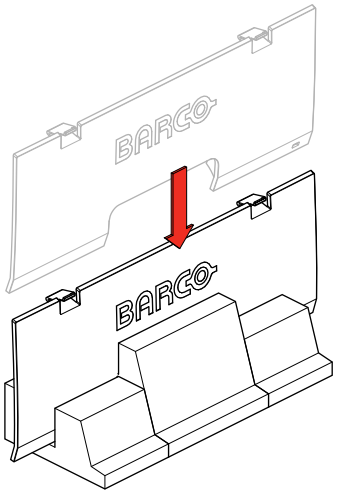

Image 7-1

2. Lock the height mechanism at the lowest display position by inserting the hook pin in the back of the stand.

   ⚠ *Caution:* Make sure that the hook pin is inserted deep enough until only the red part of the pin is visible.

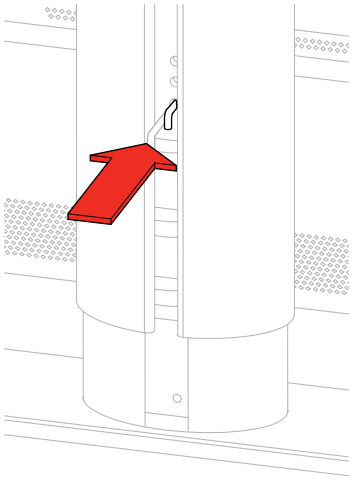

Image 7-2

3. Remove the tilt lock pin from the back of the display, if this was not yet done during installation.

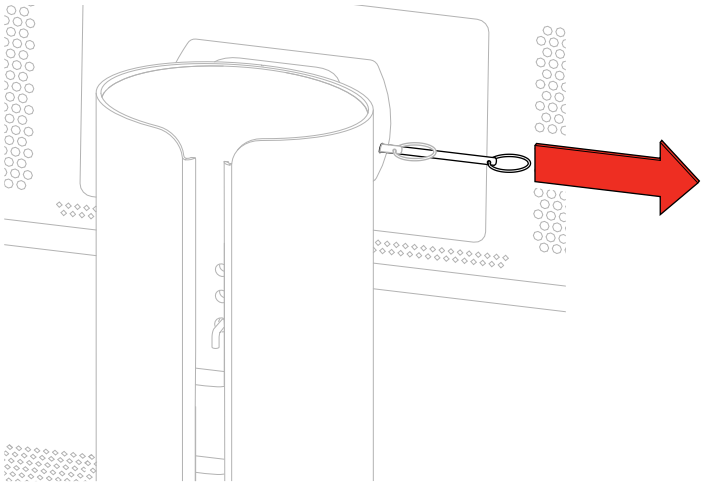

Image 7-3

4. Tilt the display in the most upwards position.

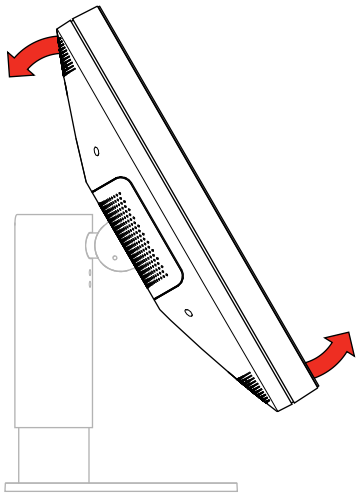

Image 7-4

5. Slide the small buffer between the display and the stand.

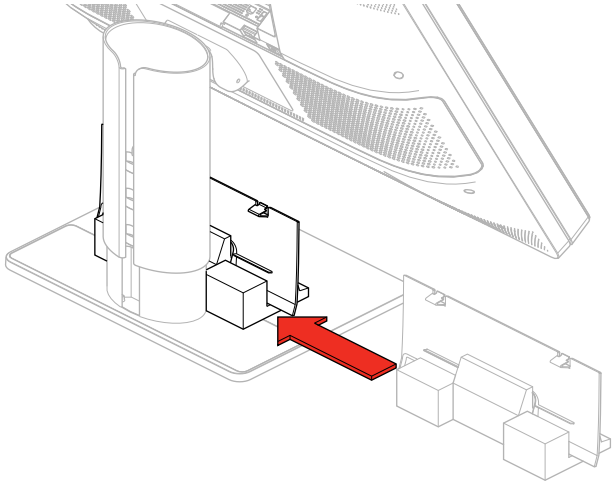

Image 7-5

6. Tilt the display back, to the most downward position.

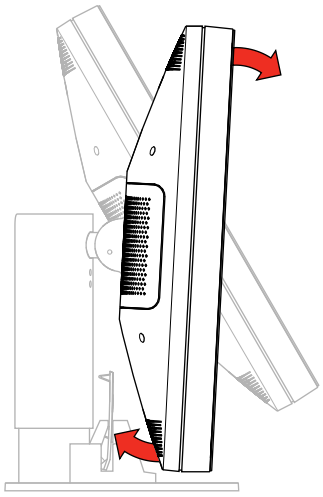

Image 7-6

7. Lock the tilt mechanism by inserting the tilt lock pin in the lock hole at the back of the display.

   Caution: Make sure that the tilt lock pin is inserted deep enough until only the red part of the pin is visible.

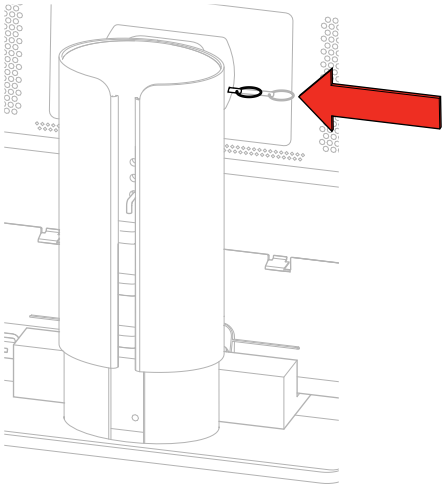

Image 7-7

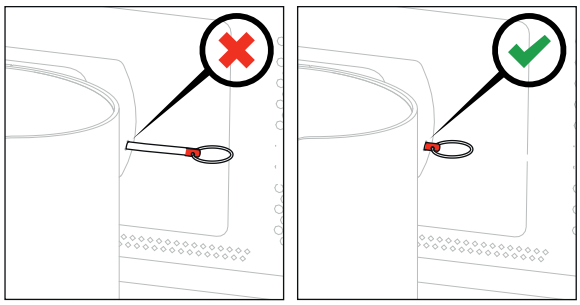

Image 7-8

8. Place the display in the bottom box so that it fits in the buffers.

   Caution: It takes 2 persons to safely execute this action.

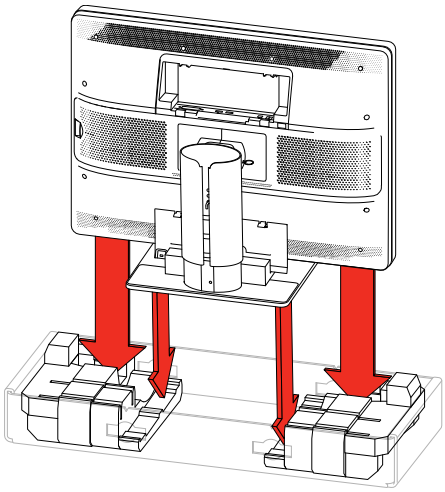

Image 7-9

9. Insert the 2 cardboard compartments in the bottom buffers.

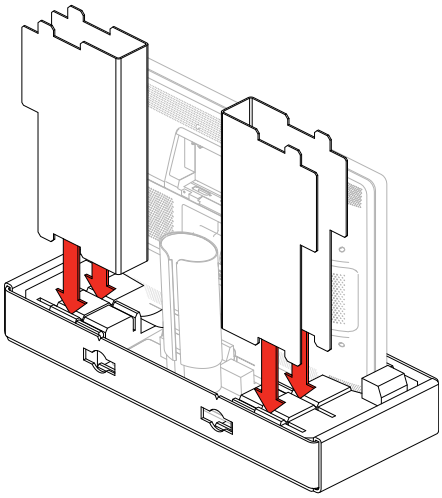

Image 7-10

10. Position the 2 top buffers on the display and cardboard compartments.

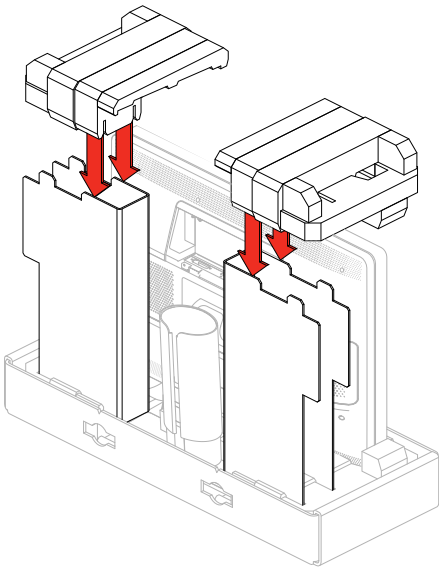

Image 7-11

11. Slide the accessory box and the display controller box in the cardboard compartments.

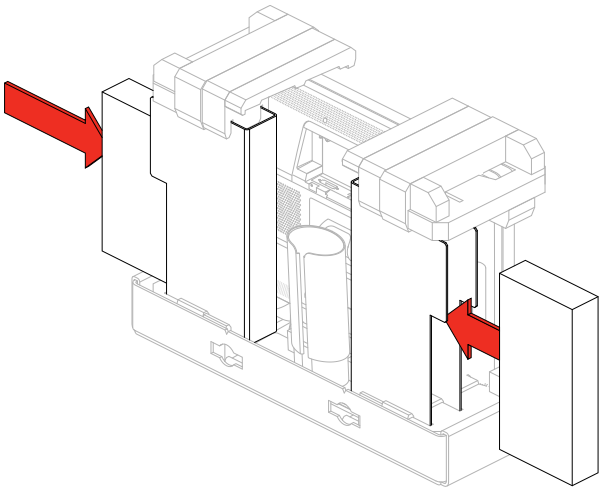

Image 7-12

12. Put the touchpad box in the dedicated cutout.

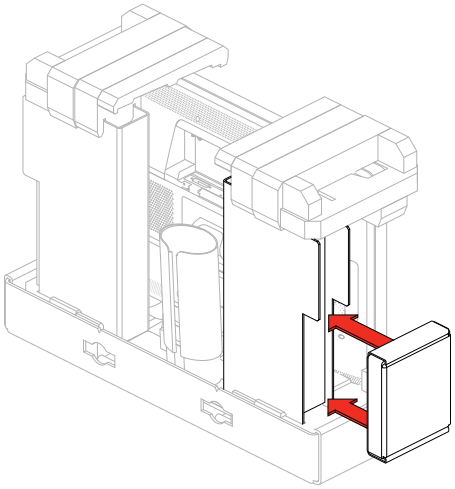

Image 7-13

13. Slide the top box over the display, in the bottom box.

⚠ *Caution:* Make sure that the position of the lock cutouts in the bottom box and top box fit together.

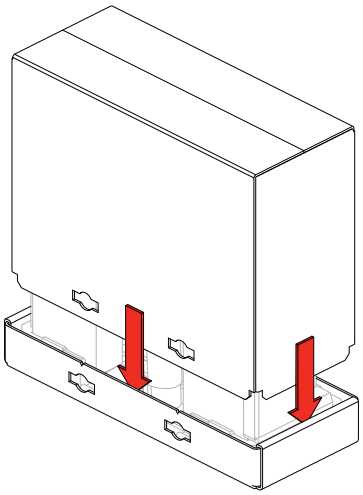

Image 7-14

14. Insert the 4 locks in the provided cutouts of the box.

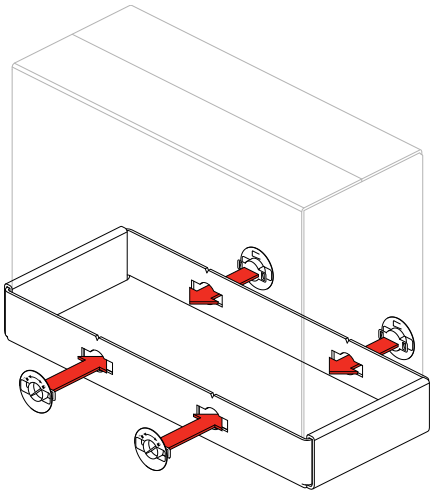

Image 7-15

15. Turn each lock a quarter turn to the right.

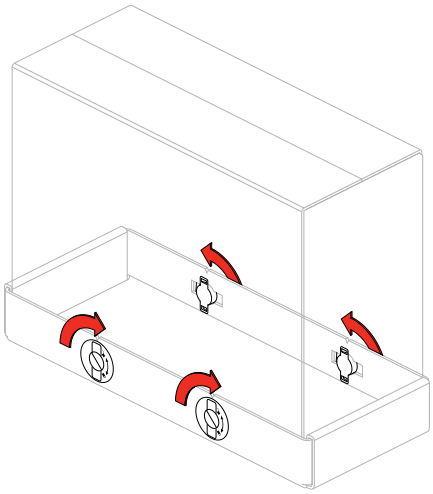

Image 7-16

16. The Coronis Uniti system is ready to be shipped.

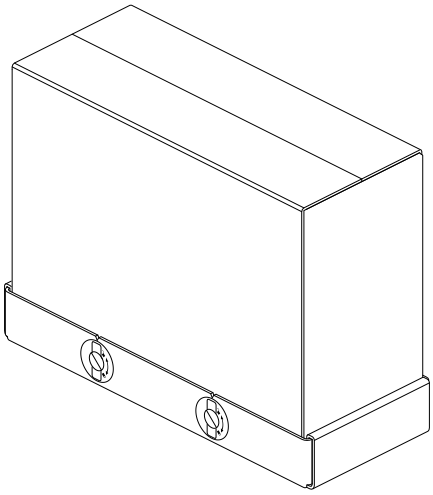

Image 7-17

Important information

8

8.1 Safety information

General recommendations

Read the safety and operating instructions before operating the device.

Retain safety and operating instructions for future reference.

Adhere to all warnings on the device and in the operating instructions manual.

Follow all instructions for operation and use.

Electrical Shock or Fire Hazard

To prevent electric shock or fire hazard, do not remove cover.

No serviceable parts inside. Refer servicing to qualified personnel.

Do not expose this apparatus to rain or moisture.

Modifications to the unit

Do not modify this equipment without authorization of the manufacturer.

Type of protection (electrical):

Display with external power supply: Class I equipment.

Degree of safety (flammable anesthetic mixture)

Equipment not suitable for use in the presence of a flammable anesthetic mixture with air or with oxygen or nitrous oxide.

Non-patient care equipment

- Equipment primarily for use in a health care facility that is intended for use where contact with a patient is unlikely (no applied part).
- The equipment shall not be used with life support equipment.
- The user should not touch the equipment, nor its signal input ports (SIP)/signal output ports (SOP) and the patient at the same time.

Power connection – Equipment with external 24 VDC power supply

- Power requirements: The equipment must be powered using the delivered medical approved 24 VDC (⎓) SELV power supply.
- The medical approved DC (⎓) power supply must be powered by the AC mains voltage.
- The power supply is specified as a part of the ME equipment or combination is specified as a ME system.
- To avoid the risk of electric shock, this equipment must only be connected to a supply mains with protective earth.
- The equipment should be installed near an easily accessible outlet.
- The equipment is intended for continuous operation.

Transient over-voltage

If the device is not used for a long time, disconnect it from the AC inlet to avoid damage by transient over-voltage.

To fully disengage the power to the device, please disconnect the power cord from the AC inlet.

High magnetic environment

- The device shall not be used in the high magnetic environment of an MRI scanner.
- The installer shall assess the magnetic environment before installation or use of the device.

Power cords:

- Do not overload wall outlets and extension cords as this may result in fire or electric shock.

- Mains lead protection (U.S.: Power cord): Power cords should be routed so that they are not likely to be walked upon or pinched by items placed upon or against them, paying particular attention to cords at plugs and receptacles.
- Use a power cord that matches the voltage of the power outlet, which has been approved and complies with the safety standard of your particular country.

Water and moisture

Never expose the device to rain or moisture.

Never use the device near water - e.g. near a bathtub, washbasin, swimming pool, kitchen sink, laundry tub or in a wet basement.

Ventilation

Do not cover or block any ventilation openings in the cover of the set. When installing the device in a cupboard or another enclosed location, heed the necessary space between the set and the sides of the cupboard.

Installation

Place the device on a flat, solid and stable surface that can support the weight of at least 3 devices. If you use an unstable cart or stand, the device may fall, causing serious injury to a child or adult, and serious damage to the device.

Malfunctions

Disconnect the equipment's power cord from the AC inlet and refer servicing to qualified service technicians under the following conditions:

- If the power cord or plug is damaged or frayed.
- If liquid has been spilled into the equipment.
- If the equipment has been exposed to rain or water.
- If the equipment does not operate normally when the operating instructions are followed. Adjust only those controls that are covered by the operating instructions since improper adjustment of other controls may result in damage and will often require extensive work by a qualified technician to restore the product to normal operation.
- If the equipment has been dropped or the cabinet has been damaged.
- If the product exhibits a distinct change in performance, indicating a need for service.

National Scandinavian Deviations for CL. 1.7.2

Finland: "Laite on liitettävä suojamaadoituskoskettimilla varustettuun pistorasiaan"

Norway: "Apparatet må tilkoples jordet stikkontakt"

Sweden: "Apparaten skall anslutas till jordat uttag"

8.2 Environmental information

Disposal Information

Waste Electrical and Electronic Equipment



This symbol on the product indicates that, under the European Directive 2012/19/EU governing waste from electrical and electronic equipment, this product must not be disposed of with other municipal waste. Please dispose of your waste equipment by handing it over to a designated collection point for the recycling of waste electrical and electronic equipment. To prevent possible harm to the environment or human health from uncontrolled waste disposal, please separate these items from other types of waste and recycle them responsibly to promote the sustainable reuse of material resources.

For more information about recycling of this product, please contact your local city office or your municipal waste disposal service.

For details, please visit the Barco website at: *http://www.barco.com/AboutBarco/weee*

Turkey RoHS compliance



Türkiye Cumhuriyeti: AEEE Yönetmeliğine Uygundur.

[Republic of Turkey: In conformity with the WEEE Regulation]

中国大陆 RoHS

Chinese Mainland RoHS

根据中国大陆《电器电子产品有害物质限制使用管理办法》（也称为中国大陆RoHS），以下部分列出了Barco产品中可能包含的有毒和/或有害物质的名称和含量。中国大陆RoHS指令包含在中国信息产业部MCV标准："电子信息产品中有毒物质的限量要求"中。

According to the "Management Methods for the Restriction of the Use of Hazardous Substances in Electrical and Electronic Products " (Also called RoHS of Chinese Mainland), the table below lists the names and contents of toxic and/or hazardous substances that Barco's product may contain. The RoHS of Chinese Mainland is included in the MCV standard of the Ministry of Information Industry of China, in the section "Limit Requirements of toxic substances in Electronic Information Products".

零件项目(名称) Component name	有毒有害物质或元素 Hazardous substances and elements					
	铅 Pb	汞 Hg	镉 Cd	六价铬 Cr6+	多溴联苯 PBB	多溴二苯醚 PBDE
印制电路配件 Printed Circuit Assemblies	x	o	o	o	o	o
液晶面板 LCD panel	x	o	o	o	o	o
外接电(线)缆 External Cables	x	o	o	o	o	o
内部线路 Internal wiring	o	o	o	o	o	o
金属外壳 Metal enclosure	o	o	o	o	o	o
塑胶外壳 Plastic enclosure	o	o	o	o	o	o
散热片(器) Heatsinks	o	o	o	o	o	o
电源供应器 Power Supply Unit	x	o	o	o	o	o
风扇 Fan	o	o	o	o	o	o
文件说明书 Paper Manuals	o	o	o	o	o	o

零件项目(名称) Component name	有毒有害物质或元素 Hazardous substances and elements					
	铅 Pb	汞 Hg	镉 Cd	六价铬 Cr6+	多溴联苯 PBB	多溴二苯醚 PBDE
光盘说明书 CD manual	o	o	o	o	o	o

本表格依据SJ/T 11364的规定编制

This table is prepared in accordance with the provisions of SJ/T 11364.

o: 表示该有毒有害物质在该部件所有均质材料中的含量均在 GB/T 26572 标准规定的限量要求以下.

o: Indicates that this toxic or hazardous substance contained in all of the homogeneous materials for this part is below the limit requirement in GB/T 26572.

x: 表示该有毒有害物质至少在该部件的某一均质材料中的含量超出 GB/T 26572 标准规定的限量要求.

x: Indicates that this toxic or hazardous substance contained in at least one of the homogeneous materials used for this part is above the limit requirement in GB/T 26572.

在中国大陆销售的相应电子信息产品（EIP）都必须遵照中国大陆《电子电气产品有害物质限制使用标识要求》标准贴上环保使用期限（EFUP）标签。Barco产品所采用的EFUP标签（请参阅实例，徽标内部的编号使用于指定产品）基于中国大陆的《电子信息产品环保使用期限通则》标准。

All Electronic Information Products (EIP) that are sold within Chinese Mainland must comply with the “Marking for the restriction of the use of hazardous substances in electrical and electronic product” of Chinese Mainland, marked with the Environmental Friendly Use Period (EFUP) logo. The number inside the EFUP logo that Barco uses (please refer to the photo) is based on the “General guidelines of environment-friendly use period of electronic information products” of Chinese Mainland.



8.3 Regulatory compliance information

Intended use

The Barco MDMC-12133 display is intended to be used in displaying and viewing digital images, including standard and multi-frame digital mammography, for review, analysis, and diagnosis by trained medical practitioners. It is especially designed for breast tomosynthesis (3D mammography) applications, breast MRI and breast US. It is especially designed for CT and ultrasound including vascular and gynaecological US.

Indications for use

- The display is not in contact with patients.
- The display is not in the same environment as the patient.
- The display is intended to be used in a dedicated diagnostic reading room.

Caution (USA): Federal law restricts this device to sale by or on the order of a physician. (Details & exemptions are in the Code of Federal Regulations Title 21, 801 Part D).

Contra-indications

Not applicable

Intended users

Barco diagnostic and mammography displays are intended to be used for primary diagnosis by trained medical practitioners. The device is initially set up by trained integrators or medical IT staff.

Manufacturing country

The manufacturing country of the product is indicated on the product label (“**Made in** …”).

Importers contact information

To find your local importer, contact one of Barco's regional offices via the contact information provided on our website (*www.barco.com*).

FCC class B

This device complies with Part 15 of the FCC Rules. Operation is subject to the following two conditions: (1) this device may not cause harmful interference, and (2) this device must accept any interference received, including interference that may cause undesired operation.

This device has been tested and found to comply with the limits for a Class B digital device, pursuant to Part 15 of the FCC Rules. These limits are designed to provide reasonable protection against harmful interference in a residential installation. This device generates, uses and can radiate radio frequency energy and, if not installed and used in accordance with the instructions, may cause harmful interference to radio communications. However, there is no guarantee that interference will not occur in a particular installation. If this device does cause harmful interference to radio or television reception, which can be determined by turning the device off and on, the user is encouraged to try to correct the interference by one or more of the following measures:

- Reorient or relocate the receiving antenna.
- Increase the separation between the device and receiver.
- Connect the device into an outlet on a circuit different from that to which the receiver is connected.
- Consult the dealer or an experienced radio/TV technician for help.

Changes or modifications not expressly approved by the party responsible for compliance could void the user's authority to operate the equipment.

FCC responsible: Barco Inc., 3059 Premiere Parkway Suite 400, 30097 Duluth GA, United States, Tel: +1 678 475 8000

Canadian notice

CAN ICES-1/NMB-1

8.4 EMC notice

General information

This device is for use in professional healthcare facility environments only.

With the installation of the device, use only the delivered external cables and power supply or a spare part provided by the legal manufacturer. Using another can result in a decrease of the immunity level of the device.

WARNING: Use of this equipment adjacent to or stacked with other equipment should be avoided because it could result in improper operation. If such use is necessary, this equipment and the other equipment should be observed to verify that they are operating normally.

WARNING: Use of accessories, transducers and cables other than those specified or provided by the manufacturer of this equipment could result in increased electromagnetic emissions or decreased electromagnetic immunity of this equipment and result in improper operation.

WARNING: Portable RF communications equipment (including peripherals such as antenna cables and external antennas) should be used no closer than 30 cm (12 inches) to any part of the Coronis Uniti, including cables specified by the manufacturer. Otherwise, degradation of the performance of this equipment could result.

Electromagnetic emissions

The Coronis Uniti is intended for use in the electromagnetic environment specified below. The customer or the user of the Coronis Uniti should assure that it is used in such an environment.

Emissions test	Compliance	Electromagnetic environment – Guidance
RF emissions CISPR 11	Group 1	The Coronis Uniti uses RF energy only for its internal function. Therefore, its RF emissions are very low and are not likely to cause any interference in nearby electronic equipment.
RF emissions CISPR 11	Class B	The Coronis Uniti is suitable for use in all establishments, including domestic establishments and those directly connected to the public low-voltage power supply network that supplies buildings used for domestic purposes.
Harmonic emissions IEC 61000-3-2	Class D	
Voltage fluctuations/ flicker emissions IEC 61000-3-3	Complies	

This Coronis Uniti complies with appropriate medical EMC standards on emissions to, and interference from surrounding equipment. Operation is subject to the following two conditions: (1) this device may not cause harmful interference, and (2) this device must accept any interference received, including interference that may cause undesired operation.

Interference can be determined by turning the equipment off and on.

If this equipment does cause harmful interference to, or suffer from harmful interference of, surrounding equipment, the user is encouraged to try to correct the interference by one or more of the following measures:

- Reorient or relocate the receiving antenna or equipment.
- Increase the separation between the equipment and receiver.
- Connect the equipment into an outlet on a circuit different from that to which the receiver is connected.
- Consult the dealer or an experienced technician for help.

Electromagnetic immunity

The Coronis Uniti is intended for use in the electromagnetic environment specified below. The customer or the user of the Coronis Uniti should assure that it is used in such an environment.

Immunity test	IEC 60601 test levels	Compliance level	Electromagnetic environment – guidance
Electrostatic discharge (ESD) IEC 61000-4-2	± 8 kV contact ± 2 kV, ± 4 kV, ± 8 kV, ± 15 kV air	± 8 kV contact ± 2 kV, ± 4 kV, ± 8 kV, ± 15 kV air	Floors should be wood, concrete or ceramic tile. If floors are covered with synthetic material, the relative humidity should be at least 30%
Electrical fast transient/ burst IEC 61000-4-4	± 2 kV for power supply lines ± 1 kV for input/ output lines 100 kHz repetition frequency	± 2 kV for power supply lines ± 1 kV for input/ output lines 100 kHz repetition frequency	Mains power quality should be that of a typical commercial or hospital environment
Surge IEC61000-4-5	Line to line: ± 0.5 kV, ± 1 kV Line to ground: ± 0.5 kV, ± 1 kV, ± 2 kV	Line to line: ± 0.5 kV, ± 1 kV Line to ground: ± 0.5 kV, ± 1 kV, ± 2 kV	Mains power quality should be that of a typical commercial or hospital environment
Voltage dips, short interruptions and voltage variations on power supply input lines IEC 61000-4-11	0% residual voltage for 0.5 period at 0°, 45°, 90°, 135°, 180°, 225°, 270° and 315° 0% residual voltage for 1 period at 0° 70% residual voltage for 25 periods at 0°	0% residual voltage for 0.5 period at 0°, 45°, 90°, 135°, 180°, 225°, 270° and 315° 0% residual voltage for 1 period at 0° 70% residual voltage for 25 periods at 0°	Mains power quality should be that of a typical commercial or hospital environment. If the user of the Coronis Uniti requires continued operation during power mains interruptions, it is recommended that the

Immunity test	IEC 60601 test levels	Compliance level	Electromagnetic environment – guidance
	Voltage interruptions: 0% residual voltage for 250 periods at 0°	Voltage interruptions: 0% residual voltage for 250 periods at 0°	Coronis Uniti be powered from an uninterruptible power supply or a battery
Power frequency (50/60 Hz) magnetic field IEC 61000-4-8	30 A/m	Not applicable [5]	Power frequency magnetic fields should be at levels characteristic of a typical location in a typical commercial or hospital environment
Conducted RF IEC 61000-4-6	3 Vrms (6 Vrms in ISM bands) 150 kHz to 80 MHz	3 Vrms (6 Vrms in ISM bands)	-
Radiated RF IEC 61000-4-3	3 V/m 80 MHz to 2.7 GHz	3 V/m	

Immunity to RF wireless communications equipment

Test frequency (MHz)	Band (MHz)	Service	Modulation	Maximum power (W)	Distance (m)	Immunity test level (V/m)
385	380 – 390	TETRA 400	Pulse modulation 18 Hz	1.8	0.3	27
450	430 – 470	GMRS 460, FRS 460	FM ± 5 kHz deviation 1 kHz sine	2	0.3	28
710	704 – 787	LTE Band 13, 17	Pulse modulation 217 Hz	0.2	0.3	9
745						
780						
810	800 – 960	GSM 800/ 900, TETRA 800, iDEN 820, CDMA 850, LTE Band 5	Pulse modulation 18 Hz	2	0.3	28
870						
930						
1720	1700 – 1990	GSM 1800, CDMA 1900, GSM 1900, DECT, LTE Band 1/3/4/ 25, UMTS	Pulse modulation 217 Hz	2	0.3	28
1845						
1970						
2450	2400 – 2570	Bluetooth, WLAN, 802.11 b/g/n, RFID 2450, LTE Band 7	Pulse modulation 217 Hz	2	0.3	28
5240	5100 – 5800	W LAN 802.11 a/n	Pulse modulation 217 Hz	0.2	0.3	9
5500						
5785						

5: Coronis Uniti doesn't contain susceptible components to magnetic fields

8.5 Explanation of symbols

Symbols on the device

On the device or power supply, you may find the following symbols (nonrestrictive list):

	Indicates compliance with Part 15 of the FCC rules (Class A or Class B)
	Indicates the device is approved according to the UL regulations
	Indicates the device is approved according to the UL regulations for Canada and US
	Indicates the device is approved according to the UL regulations for Canada and US
	Indicates the device is approved according to the UL Demko regulations
	Indicates the device is approved according to the CCC regulations
	Indicates the device is approved according to the VCCI regulations
	Indicates the device is approved according to the KC regulations
	Indicates the device is approved according to the BSMI regulations
	Indicates the device is approved according to the PSE regulations
	Indicates the device is approved according to the EAC regulations
	Caution: Federal law (United Stated of America) restricts this device to sale by or on the order of a licensed healthcare practitioner.
	Indicates the USB connectors on the device
	Indicates the DisplayPort connectors on the device

	Indicates the legal manufacturer
	Indicates the manufacturing date
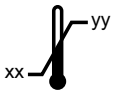	Indicates the temperature limitations[6] for the device to safely operate within specs
	Indicates the device serial number
	Indicates the device part number or catalogue number
	**Warning**: dangerous voltage
	**Caution**
	Consult the operating instructions
	Indicates this device must not be thrown in the trash but must be recycled, according to the European WEEE (Waste Electrical and Electronic Equipment) directive
	Indicates Direct Current (DC)
	Indicates Alternating Current (AC)
	Stand-by
	Equipotentiality
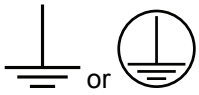	Protective earth (ground)

8.6 Legal disclaimer

Disclaimer notice

Although every attempt has been made to achieve technical accuracy in this document, we assume no responsibility for errors that may be found. Our goal is to provide you with the most accurate and usable documentation possible; if you discover errors, please let us know.

6: Values for xx and yy can be found in the technical specifications paragraph.

Barco software products are the property of Barco. They are distributed under copyright by Barco NV or Barco Inc., for use only under the specific terms of a software license agreement between Barco NV or Barco Inc. and the licensee. No other use, duplication, or disclosure of a Barco software product, in any form, is authorized.

The specifications of Barco products are subject to change without notice.

Trademarks

All trademarks and registered trademarks are property of their respective owners.

Copyright notice

This document is copyrighted. All rights are reserved. Neither this document, nor any part of it, may be reproduced or copied in any form or by any means - graphical, electronic, or mechanical including photocopying, taping or information storage and retrieval systems - without written permission of Barco.

© 2019 Barco NV all rights reserved.

Patent protection

Please refer to *www.barco.com/about-barco/legal/patents*

8.7 Technical specifications

Overview

Screen technology	IPS
Active screen size (diagonal)	853.44 mm (33.6")
Active screen size (H x V)	708.1 x 472.1 mm (27.8 x 18.6")
Aspect ratio (H:V)	3:2
Resolution	12MP (4200 x 2800 pixels)
Pixel pitch	0.1686 mm
Color imaging	Yes
Gray imaging	Yes
Bit depth	30 bit
Viewing angle (H, V)	178°
Optical glass	Yes
Uniformity correction	PPU
SteadyColor	Yes
I-Luminate	Yes
Ambient Light Compensation (ALC)	Yes, reading room selection
Ambient light sensor	Yes
Backlight Output Stabilization (BLOS)	Yes
Front sensor	Yes, I-Guard
Maximum luminance	2100 cd/m² (PPU on)

DICOM calibrated luminance	1000 cd/m²
Contrast ratio (panel typical)	1200:1 (PPU on)
Response time ((Tr + Tf)/2) (typical)	16.5 ms
Housing color	RAL 9004 / RAL 9003
Video input signals	DisplayPort 1.2
USB ports	1x USB 2.0 upstream (endpoint) 3x USB 2.0 downstream
Power rating	24 VDC, 16.25 A; 5 VDC, 0.1 A
Power requirements	This device shall only be powered by the medical approved power supply of Efore (Roal Electronics), type RHPS390. Ratings marked on the medical approved power supply: • Input rating: 100-240 VAC, 5.5 A, 50/60 Hz • Output rating: 24 VDC, 16.25 A; 5 VDC, 0.1 A
Power consumption	190 W (nominal) < 0.5 W (hibernate)
Dimensions with stand (W x H x D)	795 x 610 x 300 mm (lowest position)
Dimensions w/o stand (W x H x D)	795 x 572 x 131 mm
Dimensions packaged (W x H x D)	960 x 715 x 395 mm
Net weight with stand	33 kg
Net weight w/o stand	24 kg
Net weight packaged	42 kg
Tilt	-5° / +30°
Swivel	-23° / +23°
Pivot	N/A
Height adjustment range	95 mm
Mounting standard	VESA (200 x 100 mm & 100 x 100 mm)
Screen protection	Protective, non-reflective glass cover
Recommended modalities	Radiology, mammography and digital breast tomosynthesis
Certifications	FDA 510(K) K141428 and K151505 for General Radiology CE1639 (MDD 93/42/EEC; A1:2007/47/EC class IIb product) CCC (China), KC (Korea), PSE (Japan), Inmetro (Brazil), BIS (India), EAC (Russia, Kazakhstan, Belarus, Armenia and Kyrgyzstan) Safety specific: IEC 60950-1:2005 + A1:2009 EN 60950-1:2006 + A1:2010 + A11:2009 + A12:2011 + A2:2013 IEC 60601-1:2005 + A1:2012 EN 60601-1:2006 + A1:2013 + A12:2014 ANSI/AAMI ES 60601-1:2005 + R1:2012 CAN/CSA C22.2 No. 60601-1:14

	EMI specific: IEC 60601-1-2:2014 (ed4) EN 60601-1-2:2015 (ed4) FCC part 15 Class B ICES-001 Level B VCCI (Japan) Environmental: China Energy Label, EU RoHS, China RoHS, REACH, Canada Health, WEEE, Packaging Directive
Supplied accessories	User Guide Quick Installation Sheet Video cables (2 x DisplayPort) Main cables (UK, European (CEBEC/KEMA), USA (UL/CSA; adaptor plug NEMA 5-15P), Chinese (CCC)) USB 2.0 cable External power supply Film clip MultiTouchPad
Optional accessories	None
QA software	MediCal QAWeb
Warranty	5 years, including 40000 hours backlight warranty
Operating temperature	0°C to +35°C (+20°C to +30°C within spec)
Storage temperature	-20°C to +60°C
Operating humidity	20% - 85% (non-condensing)
Storage humidity	5% - 85% (non-condensing)
Operating pressure	70 kPa minimum
Storage pressure	50 to 106 kPa

8.8 Open source license information

Open source license information

This product contains software components released under an Open Source license. You acknowledge living up to the conditions of each separate Open Source Software license.

A list of the Open Source Software components used is available in the applicable EULA, through the “My Barco” section of the Barco website or through other (online) means.

Copyright on each Open Source Software component belongs to the respective initial copyright holder, each additional contributor and/or their respective assignee(s), as may be identified in the respective Open Source Software documentation, source code, README file, or otherwise. You shall not remove or obscure or otherwise alter the respective copyrights.

EACH SEPARATE OPEN SOURCE SOFTWARE COMPONENT AND ANY RELATED DOCUMENTATION ARE PROVIDED "AS IS" WITHOUT EXPRESS OR IMPLIED WARRANTY INCLUDING, BUT NOT LIMITED TO, THE IMPLIED WARRANTIES OF MERCHANTABILITY AND FITNESS FOR A PARTICULAR PURPOSE. IN NO EVENT SHALL THE COPYRIGHTHOLDER OR ANY OTHER CONTRIBUTOR BE LIABLE FOR DIRECT, INCIDENTAL, SPECIAL, EXEMPLARY OR CONSEQUENTIAL DAMAGES, EVEN IF ADVISED OF THE POSSIBILITY OF SUCH DAMAGES, HOWEVER CAUSED AND ON ANY THEORY OF LIABILITY. MORE INFORMATION/DETAILS IS TO BE FOUND IN EACH SPECIFIC OPEN SOURCE LICENSE.

With respect to GPL, LGPL or similar licenses with regard to corresponding source code access and automatic license terms applicability:

- You acknowledge living up to the conditions of each such specific applicable Open Source Software license. You are responsible for your own additions, changes or modifications without any recourse or claim towards Barco whatsoever. You further acknowledge that any such additions, changes or modifications may impair the ability of Barco – at Barco's sole discretion - to continue to provide service, warranties, software updates, fixes, maintenance, access or such similar abilities, without any recourse or claim towards Barco whatsoever.
- Barco offers to provide the corresponding source code, and shall make the corresponding source code available to you via email or download link, except where the applicable license entitles you to require Barco to provide you the corresponding source code on a tangible medium, in which case Barco will charge you for the actual costs of performing such distribution, such as the cost of media, shipping and handling. You may exercise this option upon written request to Barco N.V, attn. legal department, President Kennedypark 35, 8500 Kortrijk (Belgium). This offer is valid for a period of three (3) years from the date of the distribution of this product by Barco.

CE
1639



Barco NV
President Kennedypark 35
8500 Kortrijk
Belgium

K5902079 /09 | 2019-03-29