SuperServer®
E300-9A-4C
E300-9A-8C

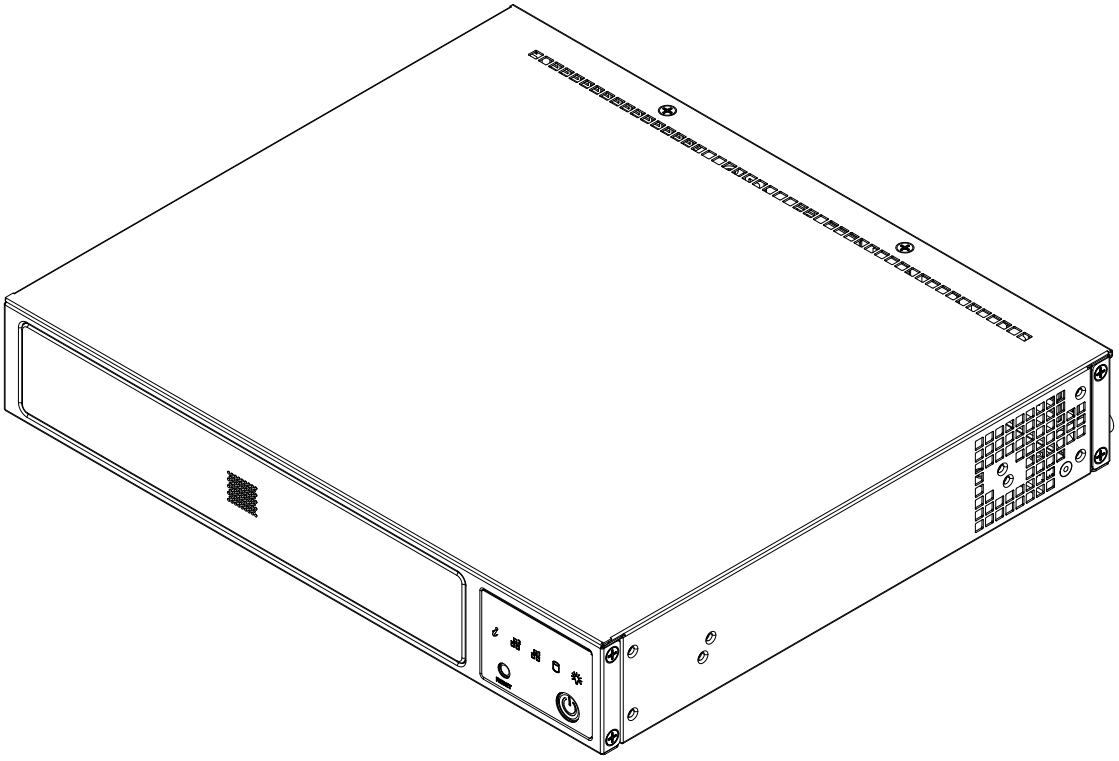

USER'S MANUAL

Revision 1.0

The information in this User's Manual has been carefully reviewed and is believed to be accurate. The vendor assumes no responsibility for any inaccuracies that may be contained in this document, and makes no commitment to update or to keep current the information in this manual, or to notify any person or organization of the updates. **Please Note: For the most up-to-date version of this manual, please see our website at www.supermicro.com.**

Super Micro Computer, Inc. ("Supermicro") reserves the right to make changes to the product described in this manual at any time and without notice. This product, including software and documentation, is the property of Supermicro and/or its licensors, and is supplied only under a license. Any use or reproduction of this product is not allowed, except as expressly permitted by the terms of said license.

IN NO EVENT WILL Super Micro Computer, Inc. BE LIABLE FOR DIRECT, INDIRECT, SPECIAL, INCIDENTAL, SPECULATIVE OR CONSEQUENTIAL DAMAGES ARISING FROM THE USE OR INABILITY TO USE THIS PRODUCT OR DOCUMENTATION, EVEN IF ADVISED OF THE POSSIBILITY OF SUCH DAMAGES. IN PARTICULAR, SUPER MICRO COMPUTER, INC. SHALL NOT HAVE LIABILITY FOR ANY HARDWARE, SOFTWARE, OR DATA STORED OR USED WITH THE PRODUCT, INCLUDING THE COSTS OF REPAIRING, REPLACING, INTEGRATING, INSTALLING OR RECOVERING SUCH HARDWARE, SOFTWARE, OR DATA.

Any disputes arising between manufacturer and customer shall be governed by the laws of Santa Clara County in the State of California, USA. The State of California, County of Santa Clara shall be the exclusive venue for the resolution of any such disputes. Supermicro's total liability for all claims will not exceed the price paid for the hardware product.

FCC Statement: This equipment has been tested and found to comply with the limits for a Class A digital device pursuant to Part 15 of the FCC Rules. These limits are designed to provide reasonable protection against harmful interference when the equipment is operated in a commercial environment. This equipment generates, uses, and can radiate radio frequency energy and, if not installed and used in accordance with the manufacturer's instruction manual, may cause harmful interference with radio communications. Operation of this equipment in a residential area is likely to cause harmful interference, in which case you will be required to correct the interference at your own expense.

California Best Management Practices Regulations for Perchlorate Materials: This Perchlorate warning applies only to products containing CR (Manganese Dioxide) Lithium coin cells. "Perchlorate Material-special handling may apply. See www.dtsc.ca.gov/hazardouswaste/perchlorate".

WARNING: This product can expose you to chemicals including lead, known to the State of California to cause cancer and birth defects or other reproductive harm. For more information, go to www.P65Warnings.ca.gov.

The products sold by Supermicro are not intended for and will not be used in life support systems, medical equipment, nuclear facilities or systems, aircraft, aircraft devices, aircraft/emergency communication devices or other critical systems whose failure to perform be reasonably expected to result in significant injury or loss of life or catastrophic property damage. Accordingly, Supermicro disclaims any and all liability, and should buyer use or sell such products for use in such ultra-hazardous applications, it does so entirely at its own risk. Furthermore, buyer agrees to fully indemnify, defend and hold Supermicro harmless for and against any and all claims, demands, actions, litigation, and proceedings of any kind arising out of or related to such ultra-hazardous use or sale.

Manual Revision 1.0

Release Date: July 06, 2018

Unless you request and receive written permission from Super Micro Computer, Inc., you may not copy any part of this document. Information in this document is subject to change without notice. Other products and companies referred to herein are trademarks or registered trademarks of their respective companies or mark holders.

Copyright © 2018 by Super Micro Computer, Inc.
All rights reserved.
Printed in the United States of America

Preface

About this Manual

This manual is written for professional system integrators and PC technicians. It provides information for the installation and use of the SuperServer E300-9A-4C/E300-9A-8C. Installation and maintenance should be performed by experienced technicians only.

Notes

For your system to work properly, please follow the links below to download all necessary drivers/utilities and the user's manual for your server.

- Supermicro product manuals: http://www.supermicro.com/support/manuals/
- Product drivers and utilities: ftp://ftp.supermicro.com
- Product safety info: http://www.supermicro.com/about/policies/safety_information.cfm

If you have any questions, please contact our support team at:
support@supermicro.com

This manual may be periodically updated without notice. Please check the Supermicro website (http://www.supermicro.com) for possible updates to the manual revision level.

Warnings

Special attention should be given to the following symbols used in this manual.

Warning! Indicates important information given to prevent equipment/property damage or personal injury.

Warning! Indicates high voltage may be encountered when performing a procedure.

Contents

Chapter 1 Introduction

1.1 Overview....7

1.2 System Features....8

1.3 Chassis Features....9

Front Features....9

Rear Features....10

1.4 Motherboard Layout....11

Quick Reference Table....12

Chipset Block Diagram....13

1-5 Server Installation and Setup....14

Unpacking the System....14

Warnings and Precautions....14

Adding Components to your System....14

Installing Rack Mounting Brackets....15

Chapter 2 Maintenance and Component Installation

2.1 Removing Power....16

2.2 Accessing the System....17

2.3 Motherboard Components....18

Processor....18

Memory Support....18

Memory Population Sequence....18

Installing Memory....19

Solid State Storage....20

Mini-PCI-E mSATA....21

M.2....21

Motherboard Battery....22

2.4 Chassis Components....23

Installing the Storage Drive....23

Installing the Riser Card....24

System Cooling....25

Chapter 3 Motherboard Connections

3.1 Power Connections 26

3.2 Headers and Connectors 27

Control Panel 30

3.3 Ports 32

3.4 Jumpers 34

Explanation of Jumpers.....34

3.5 LED Indicators 36

3.6 SATA Connections 39

Chapter 4 Software

4.1 Driver Installation.....40

4.2 SuperDoctor® 5.....41

4.3 IPMI 42

Chapter 5 BIOS

5.1 Introduction.....43

Starting the Setup Utility 43

5.2 Main Setup 44

5.3 Advanced.....46

5.4 Event Logs 72

5.5 IPMI 74

5.6 Security.....77

5.7 Boot 82

5.8 Save & Exit.....84

Appendix A BIOS Error Codes

Appendix B Standardized Warning Statements for DC Systems

Appendix C System Specifications

Contacting Supermicro

Headquarters

Address:	Super Micro Computer, Inc. 980 Rock Ave. San Jose, CA 95131 U.S.A.
Tel:	+1 (408) 503-8000
Fax:	+1 (408) 503-8008
Email:	marketing@supermicro.com (General Information) support@supermicro.com (Technical Support)
Website:	www.supermicro.com

Europe

Address:	Super Micro Computer B.V. Het Sterrenbeeld 28, 5215 ML 's-Hertogenbosch, The Netherlands
Tel:	+31 (0) 73-6400390
Fax:	+31 (0) 73-6416525
Email:	sales@supermicro.nl (General Information) support@supermicro.nl (Technical Support) rma@supermicro.nl (Customer Support)
Website:	www.supermicro.nl

Asia-Pacific

Address:	Super Micro Computer, Inc. 3F, No. 150, Jian 1st Rd. Zhonghe Dist., New Taipei City 235 Taiwan (R.O.C)
Tel:	+886-(2) 8226-3990
Fax:	+886-(2) 8226-3992
Email:	support@supermicro.com.tw
Website:	www.supermicro.com.tw

Chapter 1

Introduction

1.1 Overview

The SuperServer E300-9A-4C/E300-9A-8C is a compact, embedded system comprised of the SCE300 chassis and the A2SDi-4C-HLN4F/A2SDi-8C-HLN4F single processor motherboard. Refer to our website for information on operating systems that have been certified for use with the system (www.supermicro.com).

This chapter provides a brief outline of the functions and features. In addition to the motherboard and chassis, several important parts that are included with the system are listed below.

Main Parts List		
Description	**Part Number**	**Quantity**
84W DC Power Adapter	MCP-250-10122-0N	1
4-cm Cooling Fans	FAN-0065L4	2
PCI-E x8 Riser Card	RSC-RR1U-E8	1
Rackmount Rail Kit (optional)	MCP-290-30002-0B	1 set
RJ45 Serial Cable for Console (optional)	CBL-CUSB-0975	1

1.2 System Features

The following table provides an overview of the main features of the E300-9A-4C/E300-9A-8C. Please refer to Appendix C for additional specifications.

System Features
Motherboard
A2SDi-4C-HLN4F/A2SDi-8C-HLN4F
Chassis
SCE300: Compact Embedded Mini ITX Box
CPU
Intel Atom processor C3558/C3758 (System on a Chip)
Memory
Four DDR4 DIMM sockets; supports up to 256GB DDR4 ECC RDIMM or up to 64GB DDR4 ECC/non-ECC UDIMM; Memory Type 2666/2400/2133MHz; DIMM Sizes 64GB, 32GB, 16GB, 8GB, 4GB
Expansion Slots
One PCI-E 3.0 x4 slot (low profile)
Storage Drives
Two fixed 2.5" drive bays, one with bracket, one on base mount (one fixed drive bay when AOC area is occupied) One PCI-E 3.0 x2 interface for M.2 (M Key 2242/2280)
Power
One 84W DC power adapter
Input/Output Ports
LAN: Four 1Gbe RJ45 LAN ports IPMI: One dedicated LAN port USB: Two USB 2.0 ports Display: VGA SATA: One SATA 3.0 port DOM: SuperDOM (Disk on Module) power connectors TPM 2.0 header
Cooling
Two 4-cm PWM chassis fans, plus a passive CPU heatsink
Dimensions
W x H x D: 10" (254 mm) x 1.7" (43 mm) x 8.9" (226 mm)

1.3 Chassis Features

The SCE300 is a compact embedded 1U chassis for Mini-ITX and a Flex-ATX motherboards.

Front Features

The front of the chassis includes the control panel.

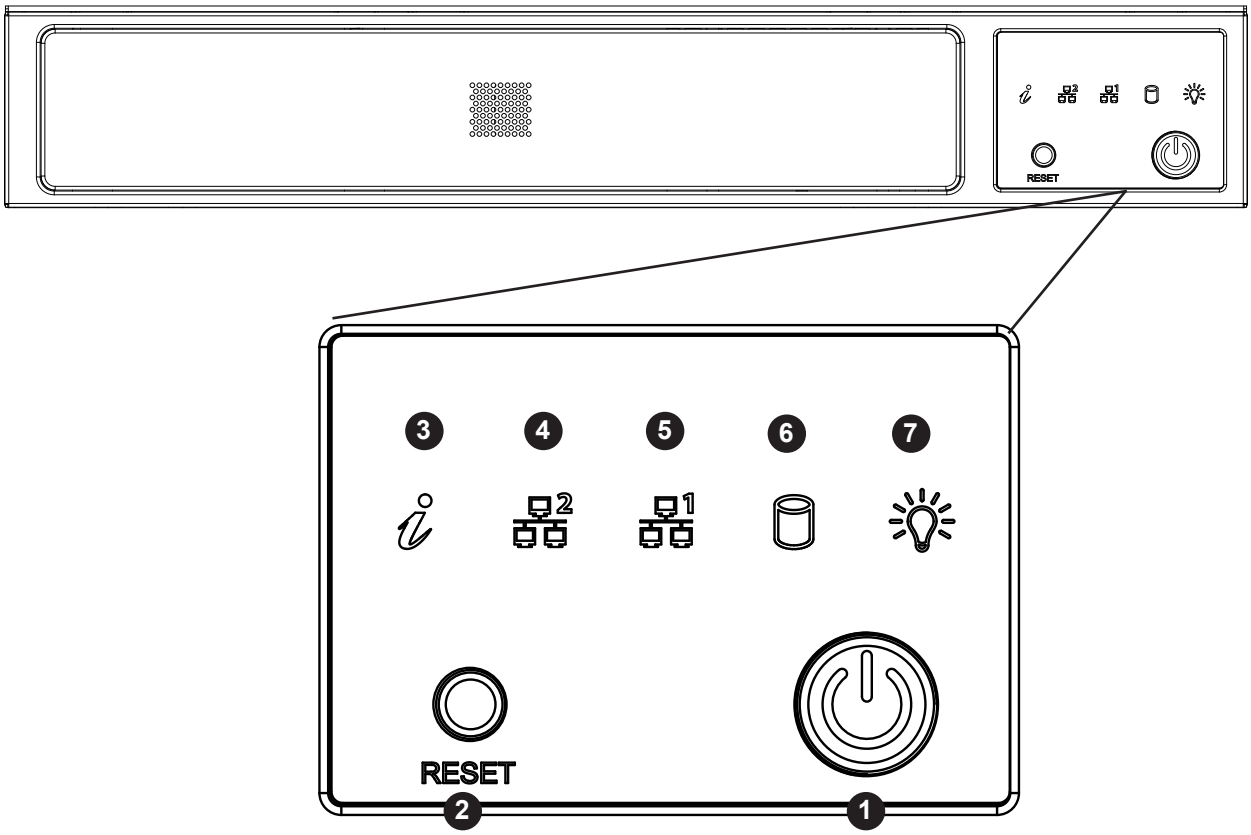

Figure 1-1. Chassis Front and Control Panel

Control Panel Features		
Item	**Features**	**Description**
1	Power button	The main power switch applies or removes primary power from the power supply to the server but maintains standby power. To perform most maintenance tasks, unplug the system to remove all power.
2	Reset button	Resets the system
3	Information LED	Alerts operator to several states, as noted in the table below
4 and 5	NIC LED	Indicates network activity on the LAN when flashing.
6	HDD LED	Indicates hard disk drive activity when flashing.
7	Power LED	Indicates power is being supplied to the system power supply units. This LED is illuminated when the system is operating normally.

Information LED	
Status	**Description**
Continuously on and red	An overheat condition has occurred. (This may be caused by cable congestion.)
Blinking red (1Hz)	Fan failure, check for an inoperative fan.
Blinking red (0.25Hz)	Power failure, check for a non-operational power supply.
Solid blue	UID has been activated locally to locate the server in a rack environment.
Blinking blue	UID has been activated using IPMI to locate the server in a rack environment..

Rear Features

The chassis rear holds input/output ports, described in chapter 3.

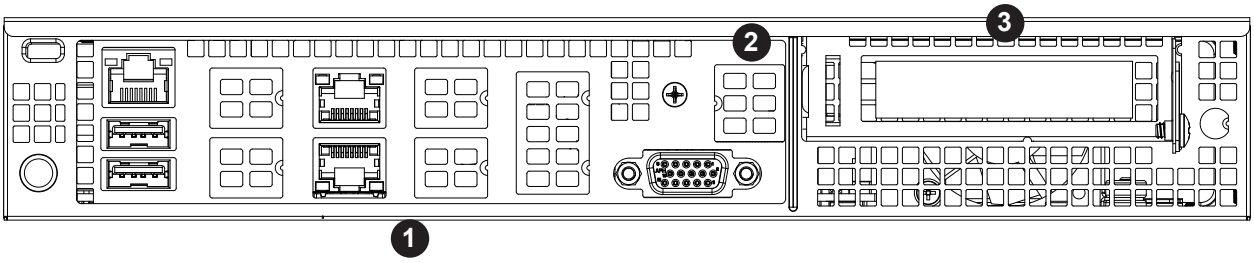

Figure 1-2. Rear Chassis View

Rear Chassis Features		
Item	**Features**	**Description**
1	I/O Ports	IPMI LAN, USB, LAN, VGA (further described in Chapter 3)
2	AOM Window	Reserved for RJ45 console redirection cable
3	PCI Bay	Bay for low-profile PCI-E add-on card

1.4 Motherboard Layout

Below is a layout of the A2SDi-4C-HLN4F/A2SDi-8C-HLN4F with jumper, connector and LED locations shown. See the table on the following page for descriptions. For detailed descriptions, pin-out information and jumper settings, refer to Chapter 3.

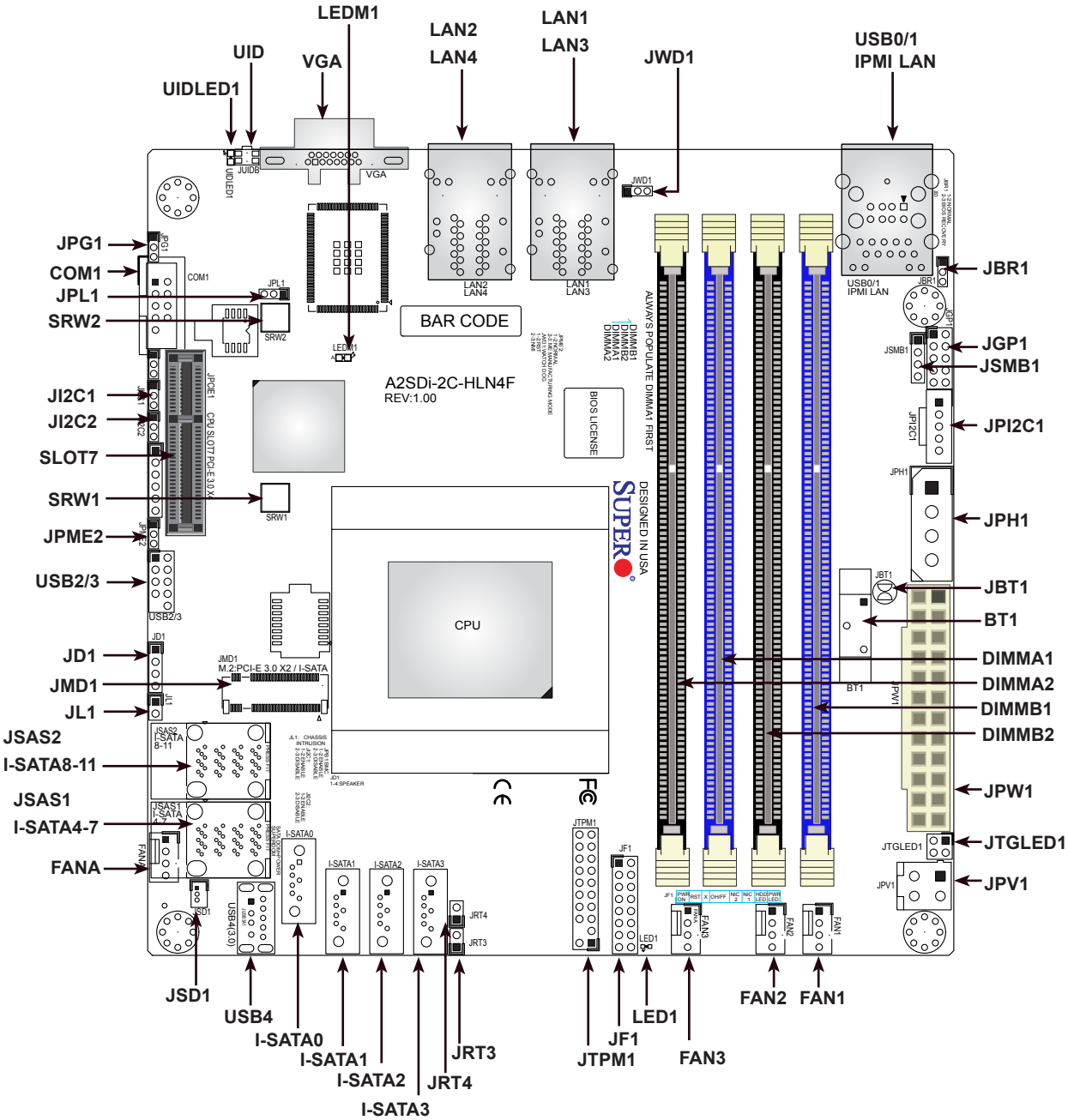

Figure 1-3. Motherboard Layout

Notes:

- "■" indicates the location of pin 1.
- Jumpers/LED indicators not indicated are used for testing only.
- The JSAS1 connector (I-SATA4-7) is not included on the A2SDi-8C-HLN4F.

Quick Reference Table

Jumper	Description	Default Setting
JBR1	BIOS Recovery	Pins 1-2 (Normal)
JBT1	CMOS Clear	Open (Normal)
JI2C1/JI2C2	SMB to PCI-E Slots Enable/Disable	Pins 2-3 (Disable)
JPG1	VGA Enable/Disable	Pins 1-2 (Enabled)
JPL1	LAN Enable/Disable	Pins 1-2 (Enabled)
JPME2	ME Manufacturing Mode	Pins 1-2 (Normal)
JWD1	Watch Dog	Pins 1-2 (Reset)

LED	Description	Status
LED1	Onboard Power LED	Solid Green: Power On
LEDM1	BMC Heartbeat LED	Blinking Green: BMC Normal
UIDLED1	UID LED	Solid Blue: Unit Identified

Connector	Description
BT1	Onboard Battery
COM1	COM Header
FAN1 - FAN3, FANA	System/CPU Fan Headers (FAN1: CPU Fan)
IPMI LAN	Dedicated IPMI LAN Port
I-SATA0 - I-SATA3	Intel SATA 3.0 Ports (I-SATA0 supports SuperDOM)
JD1	Speaker Header
JF1	Front Control Panel Header
JGP1	General Purpose I/O Header
JL1	Chassis Intrusion Header
JMD1	M.2 PCI-E 3.0 x2 / I-SATA Slot
JPH1	4-pin Power Connector for HDD use (To provide power from the motherboard to onboard HDD devices)
JPI^{2}C1	Power Supply SMBbus I^{2}C Header
JPV1	4-pin DC Power Connector (To provide alternative power for special enclosure when the 24-pin ATX power is not in use.)
JPW1	24-pin ATX Power Connector
JRT3	Thermal Diode 1 Header
JRT4	Thermal Diode 2 Header
JSAS1	I-SATA Ports 4-7
JSAS2	I-SATA Ports 8-11 (Not available on A2SDi-4C-HLN4F)
JSD1	SATA DOM Power Connector
JSMB1	SMBus Header
JTGLED1	LAN3/LAN4 Front Activity LED
JTPM1	Trusted Platform Module/Port 80 Connector
LAN1 - LAN4	Gigabit Ethernet (RJ45) Ports

Connector	Description
SLOT7	CPU PCI-E 3.0 x4 Slot
SRW1, SRW2	M.2 Holding Screws
UID	Unit ID Button
USB0/1	Back Panel Universal Serial Bus (USB) 2.0 Ports
USB2/3	Front Accessible USB 2.0 Header
USB4	Front Accessible USB 3.0 Type A Port
VGA	VGA Port

Chipset Block Diagram

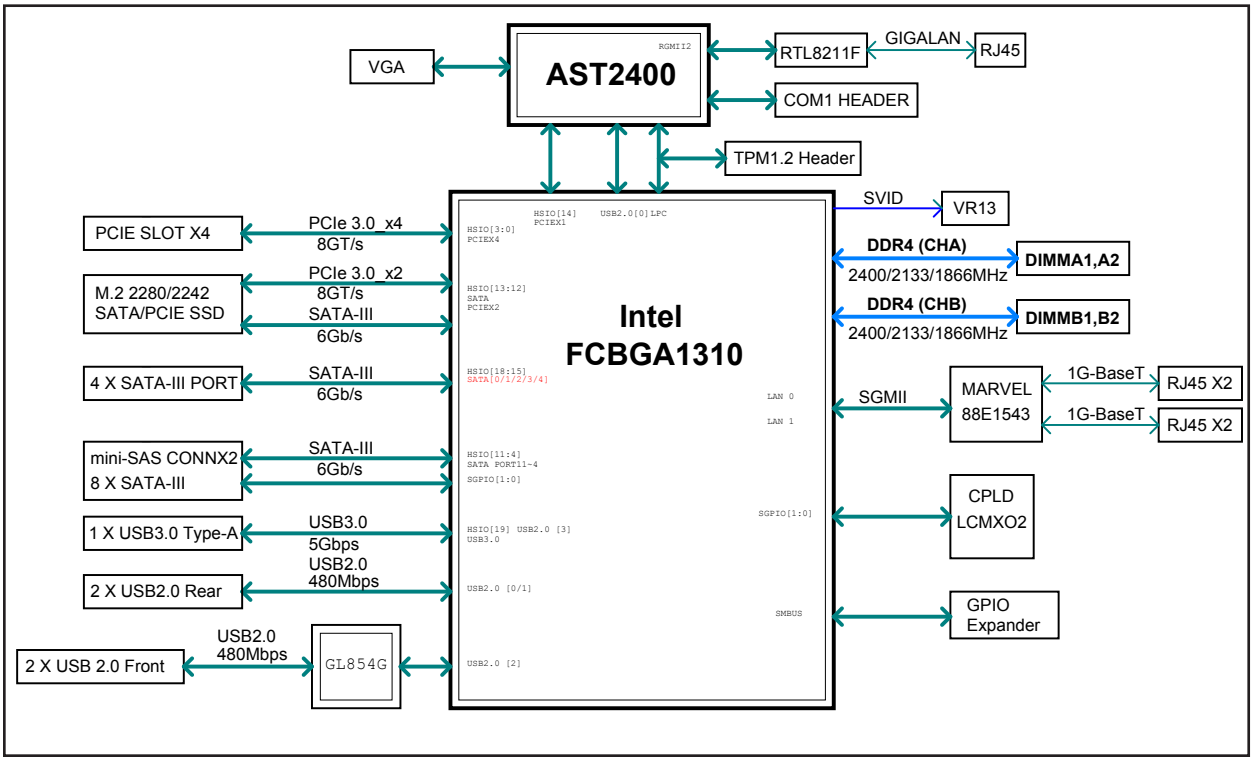

Figure 1-4. Chipset Block Diagram

Note: This is a general block diagram and may not exactly represent the features on your motherboard. See the System Specifications appendix for the actual specifications of your motherboard.

1-5 Server Installation and Setup

The server is shipped with the onboard processor and the motherboard pre-installed. Several steps are necessary to begin using your server. You must add memory, mount the hard disk drive, and mount the system in place.

Unpacking the System

Inspect the box in which the system was shipped and note if it was damaged. If the server itself shows damage, file a damage claim with the carrier.

Warnings and Precautions

- Use a regulating uninterruptible power supply (UPS) to protect the server from power surges, voltage spikes and to keep your system operating in case of a power failure.
- Review the electrical and general safety precautions in Appendix B.

Adding Components to your System

- **Memory**: If your system is not already fully integrated with system memory, refer to Chapter 2 for details on compatible types of memory and the installation procedure.
- **Drives and Storage**: To add storage capabilities to your server, see Chapter 2.
- **Input/Output:** See Chapter 3 for I/O ports and connect them as needed.
- **Software**: See Chapter 4 for description and procedures for installing software, including drivers and monitoring programs.

Installing Rack Mounting Brackets

The chassis can be mounted in a rack using two rack brackets and a two-part power adapter shelf bracket (optional, MCP-290-30002-0B).

1. Attach the rack brackets using three screws through the holes in each bracket to secure the bracket to the chassis.
2. Install the handles, using two screws through the bracket and into each handle.
3. If you are using the optional power adapter bracket, install the power adapter on its bracket. Place it as shown, then add the retention bracket using two screws.
4. Mount the power adapter bracket assembly on the right side of the chassis using three screws.

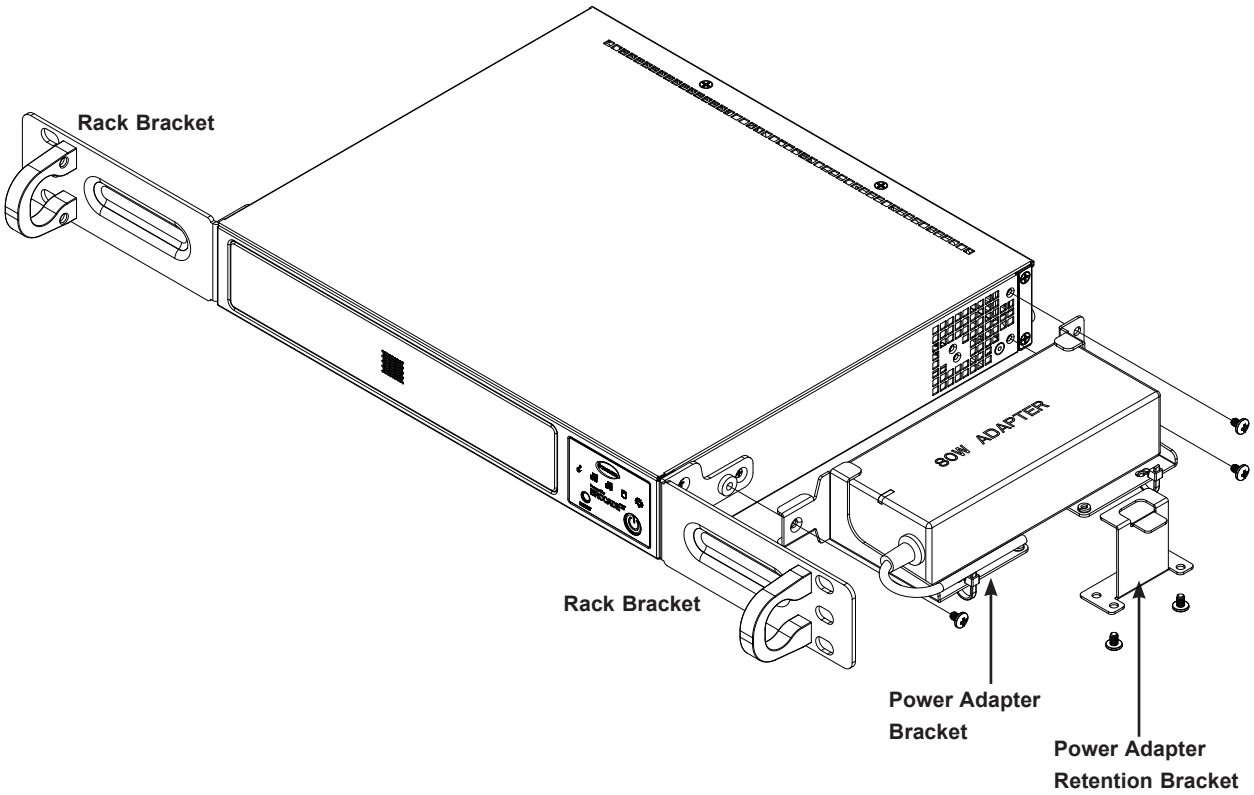

Figure 1-5. Installing Rack Mounting Brackets

Chapter 2

Maintenance and Component Installation

This chapter provides instructions on installing and replacing main system components. To prevent compatibility issues, only use components that match the specifications and/or part numbers given.

Installation or replacement of most components require that power first be removed from the system. Please follow the procedures given in each section.

2.1 Removing Power

Use the following procedure to ensure that power has been removed from the system. This step is necessary when removing or installing non hot-swap components or when replacing a non-redundant power supply.

1. Use the operating system to power down the system.
2. After the system has completely shut-down, disconnect the AC adapter power cord from the power source.
3. Disconnect the power cord from the chassis.

2.2 Accessing the System

The SCE300 features a removable top cover to access to the inside of the chassis.

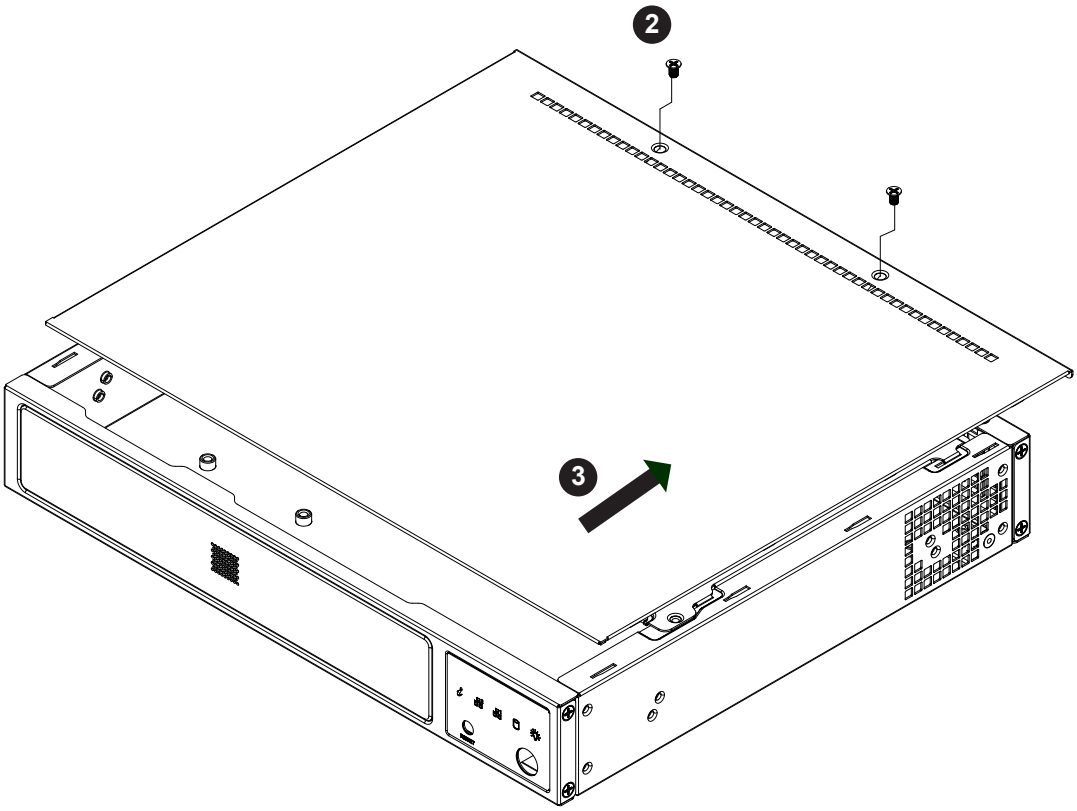

Figure 2-1. Removing the Chassis Cover

Removing the Top Cover

1. Power down the system as described in section 2.1.
2. Remove the two screws that hold the cover in place.
3. Slide the cover sideways as illustrated above to release the front and rear cover hooks from the chassis.
4. Lift the cover up and off the chassis.

Caution: Except for short periods of time, do *not* operate the server without the cover in place. The chassis cover must be in place to allow proper airflow and prevent overheating.

2.3 Motherboard Components

Installing Memory

Memory Support

The A2SDi-4C-HLN4F/A2SDi-8C-HLN4F supports up to 128GB of ECC RDIMM or 64GB of ECC/non-ECC UDIMM DDR4 memory in four DIMM slots. Refer to the tables below for additional memory information.

Recommended Population (Balanced)				
DIMMA1	**DIMMB1**	**DIMMA2**	**DIMMB2**	**Total System Memory**
4GB	4GB			8GB
4GB	4GB	4GB	4GB	16GB
8GB	8GB			16GB
8GB	8GB	8GB	8GB	32GB
16GB	16GB			32GB
16GB	16GB	16GB	16GB	64GB
32GB	32GB			64GB
32GB	32GB	32GB	32GB	128GB
64GB	64GB			128GB

Unbuffered DDR4 ECC/Non-ECC DIMM Memory				
DIMMs per channel	**DIMMs per channel**	**DIMM Type**	**POR Speed MT/s**	**Memory Population Sequence**
1	1	Unbuffered DDR4 DIMM	1866, 2133, 2400	A1, A2 (2 DIMMs)
2	2	Unbuffered DDR4 DIMM	1866, 2133, 2400	A1, B1, A2, B2 (4 DIMMs)

DIMM Installation

Begin by removing power from the system as described in Section 2.1 and removing the cover as described in Section 2.2.

1. Insert DIMM modules in the following order: DIMMA1, DIMMB1, DIMMA2, DIMMB2. For the system to work properly, use memory modules of the same type and speed.
2. Push the release tabs outwards on both ends of the DIMM slot to unlock it.
3. Align the key of the DIMM module with the receptive point on the memory slot.
4. Align the notches on both ends of the module against the receptive points on the slot.
5. Seat the module firmly into the slot, pushing down with your thumbs evenly on both sides of the module until it snaps into place.
6. Press the release tabs to the lock positions to secure the DIMM module into the slot.

DIMM Removal

Reverse the steps above to remove the DIMM modules from the motherboard.

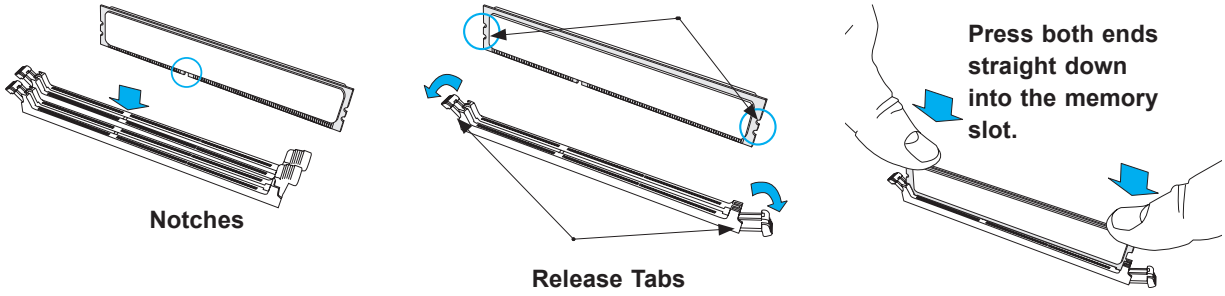

Figure 2-2. Installing DIMMs

Note: Visit the product page on the Supermicro website for possible updates to memory support (www.supermicro.com).

Solid State Storage

This motherboard supports two internally mounted solid state storage cards:

- One mini-PCI-E mSATA slot
- One M.2 slot supporting SATA

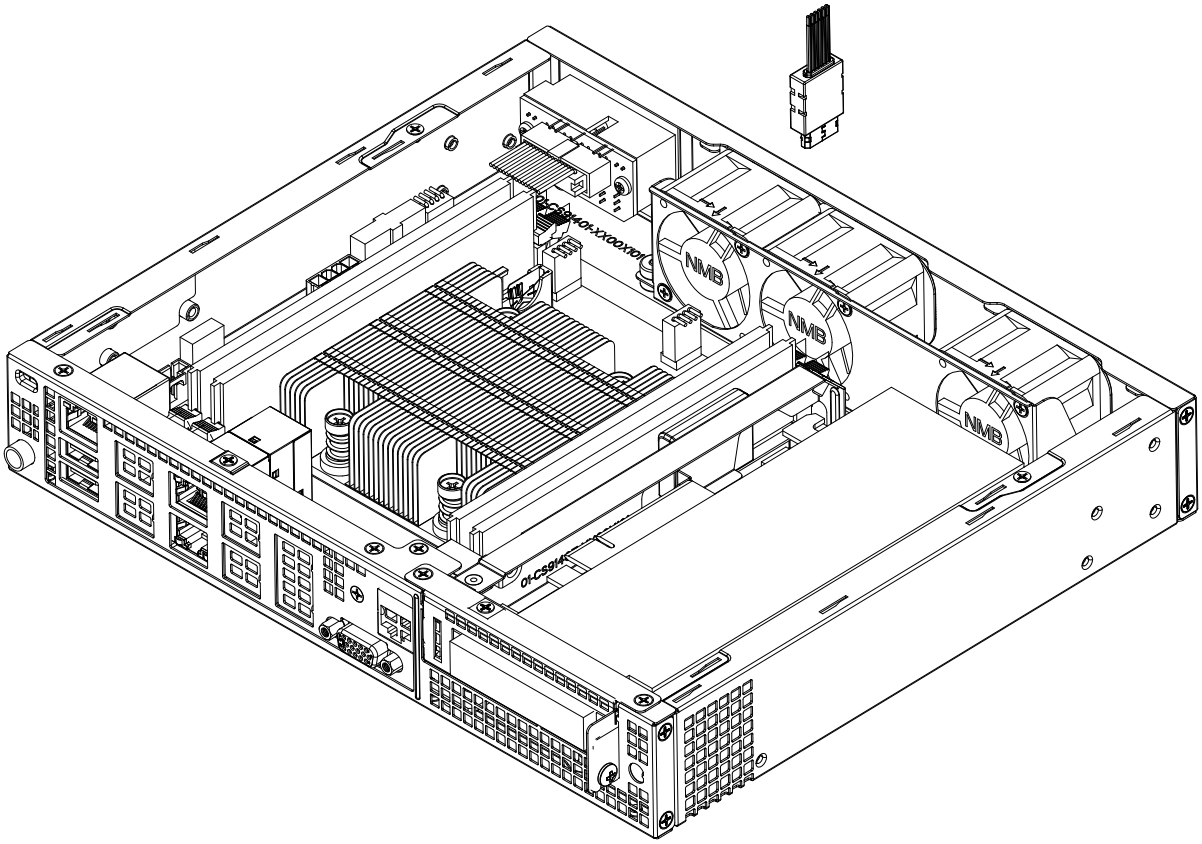

Figure 2-2. Installing a Mini-PCI-E mSATA Card

Mini-PCI-E mSATA

The A2SDi-4C-HLN4F/A2SDi-8C-HLN4F supports a PCI-E x4 slot for NVMe drives. The mSATA is muxed with the I-SATA5.

M.2

M.2 is formerly known as Next Generation Form Factor (NGFF). The A2SDi-4C-HLN4F/A2SDi-8C-HLN4F deploys an M key (2242/2280) dedicated for SSD devices with the ultimate performance capability in a PCI Express 3.0 x4 interface for native PCI-E SSD support. The M.2 is muxed with the I-SATA4 port for legacy SATA SSD devices.

Installing the M.2 Card

1. Access the motherboard and locate the M.2 connector (Figure 1.3, JMD1: M2)
2. Gently insert the M.2 card into the connector.
3. Use a screw to secure the M.2 card to the M2_SRW1 or M2_SRW2 standoff.

Motherboard Battery

The motherboard uses non-volatile memory to retain system information when system power is removed. This memory is powered by a lithium battery residing on the motherboard.

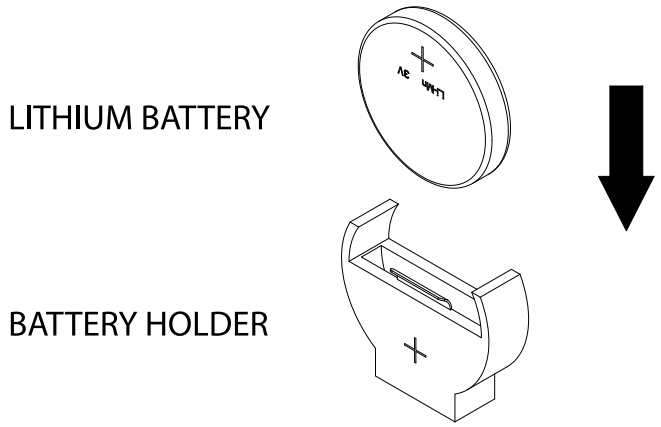

Figure 2-3. Installing the Onboard Battery

Replacing the Battery

1. Remove power from the system as described in section 2.1 and remove the chassis cover as described in section 2.2.
2. Push aside the small clamp that covers the edge of the battery. When the battery is released, lift it out of the holder.
3. To insert a new battery, slide one edge under the lip of the holder with the positive (+) side facing up. Then push the other side down until the clamp snaps over it.

Note: Handle used batteries carefully. Do not damage the battery in any way; a damaged battery may release hazardous materials into the environment. Do not discard a used battery in the garbage or a public landfill. Please comply with the regulations of your local hazardous waste management agency to dispose of your used battery properly.

Warning: There is a danger of explosion if the onboard battery is installed upside down (which reverses its polarities). This battery must be replaced only with the same or an equivalent type recommended by the manufacturer (CR2032).

2.4 Chassis Components

Installing the Storage Drive

The SCE300 can accommodate two fixed 2.5" drives, one with bracket, one on a base mount (only one fixed drive supported when the AOC area is occupied). Use enterprise quality drives only.

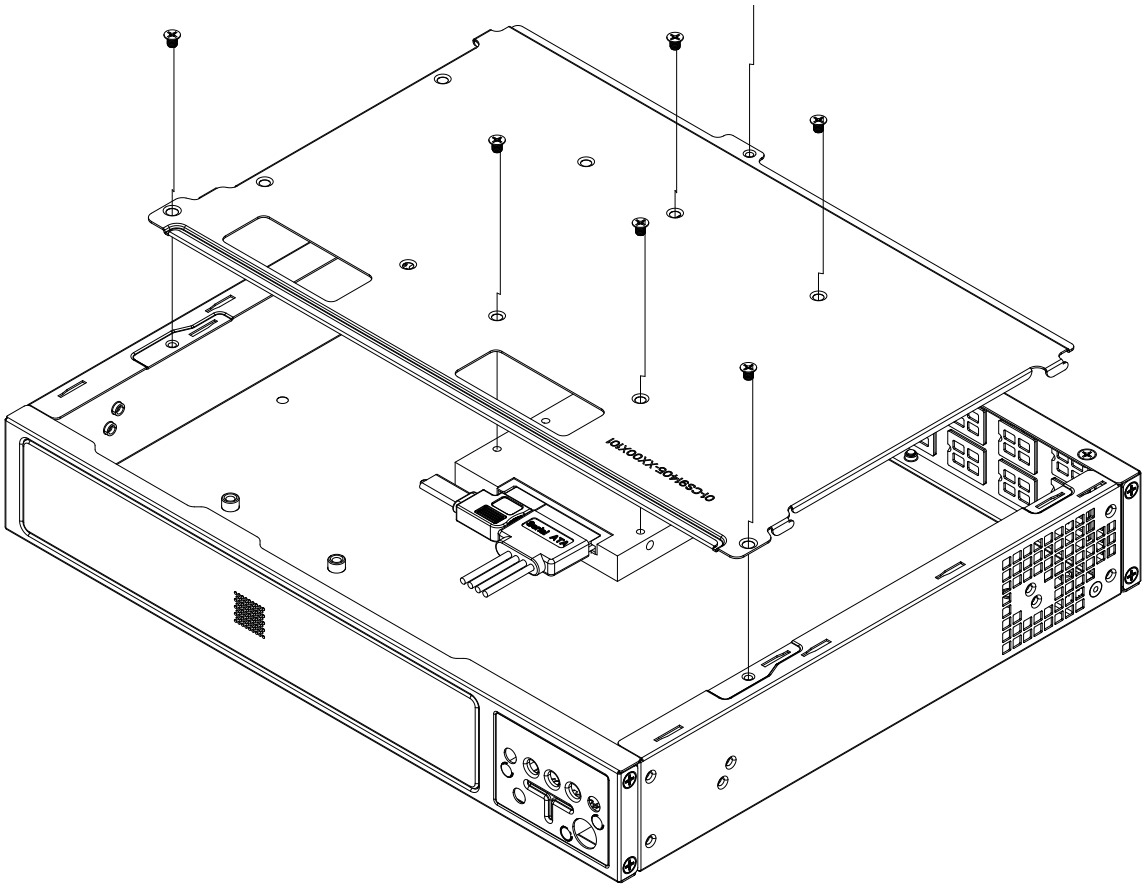

Figure 2-4. Installing the Hard Drive

Installing the Hard Drive

The motherboard should be installed before installing the drive.

1. Remove power from the system as described in section 2.1 and remove the chassis cover as described in section 2.2.
2. Remove the screws securing the hard drive tray to the support bracket and set them aside for later use. Lift the tray out.
3. Place the drive into the tray and secure it to the tray with the screws provided with drive.

4. Return the drive tray assembly into the chassis, aligning the tabs of the tray with the slots in the chassis. Secure the tray to the chassis support bracket with the screws previously set aside.

5. Attach the cable SATA connector and to the motherboard connector. This cable carries both the SATA signal and the SATA power.

6. Reinstall the chassis cover and power up the system.

Installing the Riser Card

The system can support one PCI-E x8 expansion card by means of an optional riser card. The riser card is inserted in the expansion slot on the motherboard. Installation of the riser card and riser card bracket is pictured below.

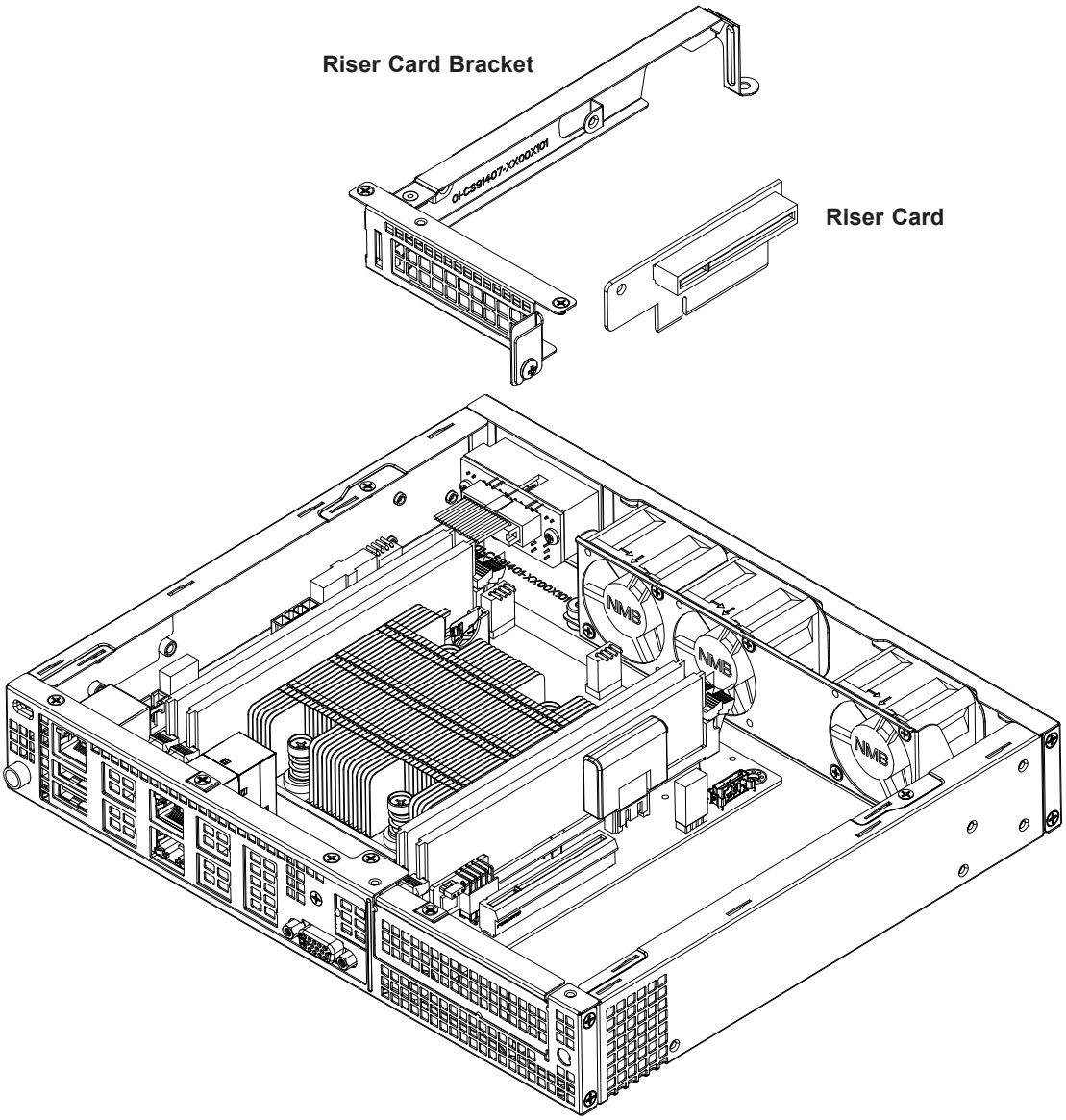

Figure 2-5. Installing the Riser Card

System Cooling

The SCE300 includes two replaceable 4-cm fans. An optional third fan can be purchased.

Replacing the System Fan

1. Remove power from the system as described in section 2.1 and remove the chassis cover as described in section 2.2.
2. Remove the failed fan power cable from motherboard.
3. Remove the screws securing the fan to the chassis wall and save them.
4. Lift the fan out of the chassis.
5. Align the replacement fan with the holes in the wall of the chassis.
6. Secure the fan to the chassis wall using the screws previously set aside.
7. Reconnect the fan cable to motherboard.
8. Reinstall the chassis top cover, reconnect the AC power cord and power up the system.

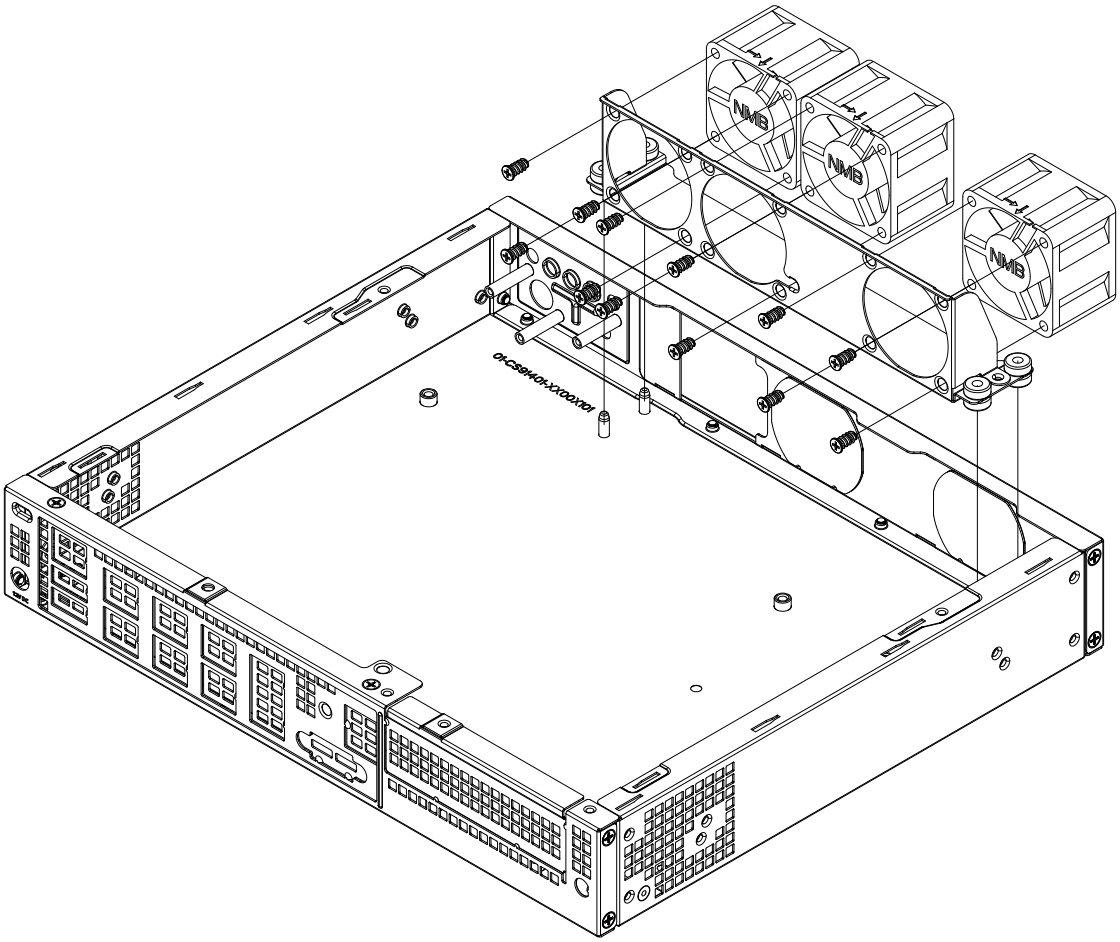

Figure 2-6. System Fans (third fan optional)

Chapter 3

Motherboard Connections

This section describes the connections on the A2SDi-4C-HLN4F/A2SDi-8C-HLN4F motherboard and provides pinout definitions. Note that depending on how the system is configured, not all connections are required. The LEDs on the motherboard are also described here. A motherboard layout indicating component locations may be found in Chapter 1.

Please review the safety precautions in Appendix B before installing or removing components.

3.1 Power Connections

Three power connections on the A2SDi-4C-HLN4F must be connected to the power supply. The wiring is included with the power supply.

Main ATX Power, 4-pin HDD Power, 4-pin DC Power

The primary power connector (JPW1) meets the ATX SSI EPS 24-pin specification. JPH1 is a 4-pin power connector for HDD devices. JPV1 is a 4-pin DC power connector. Refer to the following page for connector details and locations.

Important: To provide adequate power to the motherboard, connect the 24-pin *and* the 4-pin power connectors to the power supply. Failure to do so may void the manufacturer's warranty on your power supply and motherboard.

ATX Power 24-pin Connector Pin Definitions

Pin#	Definition	Pin#	Definition
13	+3.3V	1	+3.3V
14	-12V	2	+3.3V
15	COM	3	COM
16	PS_ON	4	+5V
17	COM	5	COM
18	COM	6	+5V
19	COM	7	COM
20	Res (NC)	8	PWR_OK
21	+5V	9	5VSB
22	+5V	10	+12V
23	+5V	11	+12V
24	COM	12	+3.3V

Required Connection

4-pin HDD Power Pin Definitions

Pin#	Definition
1	12V
2-3	Ground
4	5V

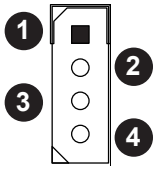

JPH1

+12V 4-pin Power Pin Definitions

Pin#	Definition
1-2	Ground
3-4	+12V

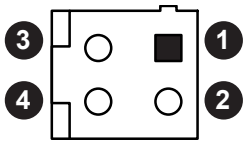

JPV1

3.2 Headers and Connectors

Fan Headers

There are four 4-pin fan headers on the motherboard. Pins 1-3 are backward compatible with traditional 3-pin fans. The onboard fan speeds are controlled by Thermal Management via IPMI. When using Thermal Management setting, use all 3-pin fans or all 4-pin fans. Refer to the table below for pin definitions.

Fan Header Pin Definitions	
Pin#	**Definition**
1	Ground (Black)
2	+12V (Red)
3	Tachometer
4	PWM_Control

Speaker

JD1 is the speaker header. Connect the cable of the external speaker to pins 1-4.

General Purpose I/O Header

JGP1 is a general purpose input/ouput header via Intel PCH. Refer the table below for pin definitions.

JGP1 Header Pin Definitions		
Pin#	**Definition**	**Definition**
1	+5V	+5V
2	Ground	Ground
3	GP0	GPP_E0
4	GP1	GPP_F1
5	GP2	GPP_E1
6	GP3	GPP_F2
7	GP4	GPP_E2
8	GP5	GPP_F3
9	GP6	GPP_F0
10	GP7	GPP_F4

TPM/Port 80 Header

The JTPM1 header is used to connect a Trusted Platform Module (TPM), which is available from Supermicro. A TPM is a security device that supports encryption and authentication in hard drives. It enables the motherboard to deny access if the TPM associated with the hard drive is not installed in the system. Refer the table below for pin definitions. The following document provides information about the TPM: http://www.supermicro.com/manuals/other/TPM.pdf.

Trusted Platform Module Header Pin Definitions

Pin#	Definition	Pin#	Definition
1	LCLK	2	GND
3	LFRAME#	4	No Pin
5	LRESET#	6	+5V (X)
7	LAD3	8	LAD2
9	3.3V	10	LAD1
11	LAD0	12	GND
13	SMB_CLK (X)	14	SMB_DAT (X)
15	P3V3_STBY	16	SERIRQ
17	GND	18	LPC_CLKRUN (X)
19	SUS_STAT_N	20	LDRQ# (X)

Disk-On-Module Power Connector

The Disk-On-Module (DOM) power connector at JSD1 provides 5V power to a solid-state DOM storage device connected to one of the SATA ports. Refer the table below for pin definitions.

DOM Power Pin Definitions

Pin#	Definition
1	5V
2	Ground
3	Ground

Chassis Intrusion

A Chassis Intrusion header is located at JL1 on the motherboard. Attach the appropriate cable from the chassis to inform you when the chassis is opened. Refer to the table below for pin definitions.

Chassis Intrusion Pin Definitions

Pins	Definition
1	Intrusion Input
2	Ground

Power SMB (I^2C) Header

The Power System Management Bus (I^2C) connector (JPI^2C1) monitors the power supply, fan, and system temperatures. Refer to the table below for pin definitions.

Power SMB Header Pin Definitions	
Pin#	**Definition**
1	Clock
2	Data
3	Power Failure
4	Ground
5	No Connection

System Management Bus Header

A System Management Bus header for additional slave devices or sensors is located at JSMB1. Refer to the table below for pin definitions.

SMBus Header Pin Definitions	
Pin#	**Definition**
1	Data
2	Ground
3	Clock
4	No Connection

LAN Port Activity LED Headers

JTGLED1 is the activity header for LAN1 and LAN2. Refer to the table below for pin definitions.

LAN Activity LED Pin Definitions	
Pins	**Definition**
1	3V3 Stby
2	LAN3_ACT_N
3	3V3 Stby
4	LAN4_ACT_N

Thermal Diode Headers

JRT3 is the thermal diode 1 header, and JRT4 is the thermal diode 2 header. They are thermal sensor headers that provide additional system temperature monitoring. Refer to the table below for pin definitions.

Thermal Diode Pin Definitions	
Pins	**Definition**
1	TD1_P
2	TD1_N

SATA Ports

The A2SDi-4C-HLN4F/A2SDi-8C-HLN4F has twelve SATA 3.0 ports that are supported by the Intel Atom SoC chipset. I-SATA0 has built-in power pins to support Supermicro's SATA DOM (Disk On Module) solutions. I-SATA ports 4-11 are available via miniSAS. JMD1 is an M.2 PCI-E 3.0 x2 slot that is muxed with I-SATA.

Unit Identifier Switch/UID LED Indicator

A Unit Identifier (UID) switch and an LED Indicator are located on the motherboard. The UID switch is located at UID, which is next to the VGA port on the back panel. The UID LED (UIDLED1) is located next to the UID switch. When you press the UID switch, the UID LED activates. Press the UID switch again to deactivate the LED indicator. The UID Indicator provides easy identification of a system unit that may be in need of service.

Note: UID can also be triggered via IPMI on the motherboard. For more information on IPMI, please refer to the IPMI User's Guide posted on our website at http://www.supermicro.com.

UID Switch Pin Definitions

Pin#	Definition
1	Ground
2	Ground
3	Button In
4	Button In

UID LED Pin Definitions

Color	Status
Blue: On	Unit Identified

Control Panel

JF1 contains header pins for various control panel connections. Refer to the figure below for the pin locations and definitions of the control panel buttons and LED indicators.

All JF1 wires have been bundled into a single cable to simplify this connection. Verify that the red wire plugs into pin 1 as marked on the motherboard. The other end connects to the control panel PCB board.

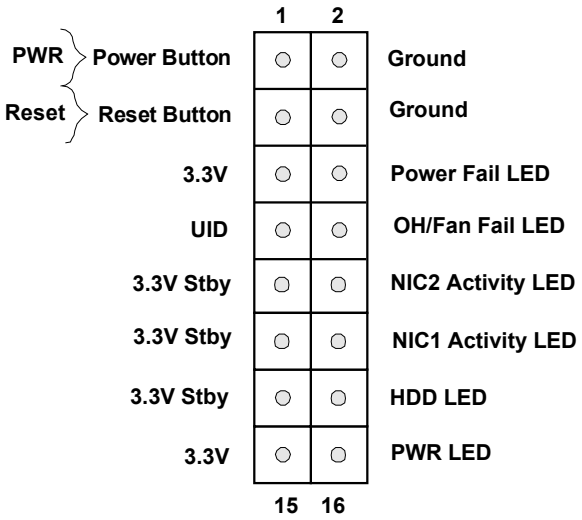

Figure 3-1. JF1: Control Panel Pins

Power LED

The Power LED connection is located on pins 15 and 16 of JF1. Refer to the table below for pin definitions.

Power LED Pin Definitions (JF1)	
Pins	**Definition**
15	3.3V
16	PWR LED

HDD LED

The HDD LED connection is located on pins 13 and 14 of JF1. Attach a cable to pin 14 to show hard drive activity status. Refer to the table below for pin definitions.

HDD LED Pin Definitions (JF1)	
Pins	**Definition**
13	3.3V Stdby
14	HDD Active

Reset Button

The Reset Button connection is located on pins 3 and 4 of JF1. Attach it to a hardware reset switch on the computer case to reset the system. Refer to the table below for pin definitions.

Reset Button Pin Definitions (JF1)	
Pins	**Definition**
3	Reset
4	Ground

Power Button

The Power Button connection is located on pins 1 and 2 of JF1. Momentarily contacting both pins will power on/off the system. This button can also be configured to function as a suspend button with a setting in the BIOS (see Chapter 4). To turn off the power when the system is in suspend mode, press the button for 4 seconds or longer. Refer to the table below for pin definitions.

Power Button Pin Definitions (JF1)	
Pins	**Definition**
1	Signal
2	Ground

Overheat (OH)/Fan Fail

Connect an LED cable to pins 7 and 8 of JF1 to use the Overheat/Fan Fail LED connections. The LED on pin 8 provides warnings of overheat or fan failure.

OH/Fan Fail Indicator Status	
Pin#	**Definition**
Off	Normal
On	Overheat
Flashing	Fan Fail

OH/Fan Fail LED Pin Definitions (JF1)	
Pins	**Definition**
7	Vcc/Blue UID LED
8	OH/Fan Fail LED

NIC1/NIC2 (LAN1/LAN2 or LAN3/LAN4)

The NIC (Network Interface Controller) LED connection for LAN port 1 is located on pins 11 and 12 of JF1, and the LED connection for LAN Port 2 is on pins 9 and 10. Attach the NIC LED cables here to display network activity.

LAN1/LAN2 LED Pin Definitions (JF1)	
Pins	**Definition**
9/11	3.3V Stby
10/12	NIC2/NIC1 Active LED

3.3 Ports

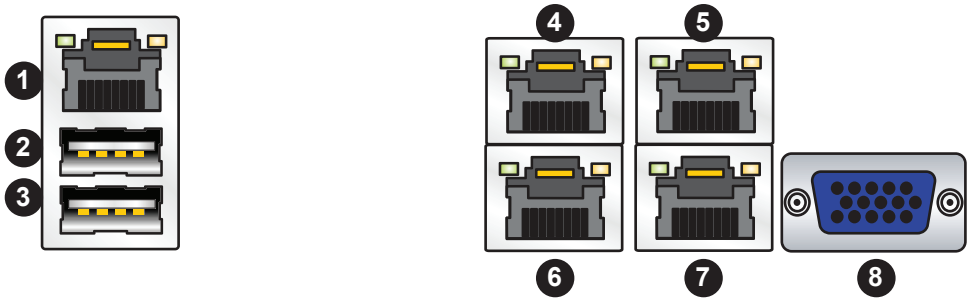

Figure 3-2. I/O Ports

#	Description	#	Description
1	Dedicated IPMI LAN	5	LAN4 Port
2	USB1 Port (USB2.0)	6	LAN1 Port
3	USB0 Port (USB2.0)	7	LAN2 Port
4	LAN3 Port	8	VGA Port

LAN Ports

Two 10G Ethernet ports (LAN1/2) are located on the I/O panel. In addition, a dedicated IPMI LAN is located above the USB0/1 ports on the back panel. Refer to the LED Indicator section for LAN LED information.

VGA Port

A video (VGA) port is located next to LAN ports 2 and 4 on the I/O panel. Refer to the motherboard layout diagram in Section 1.5.

Universal Serial Bus (USB) Ports

There are two USB ports (USB0/1) on the I/O panel. The motherboard also has one front access USB 2.0 header (USB2/3) and one USB 3.0 Type A header (USB4). The onboard headers can be used to provide front side USB access with a cable (not included).

Type A USB (3.0) Pin Definitions	
Pin#	**Definition**
1	VBUS
2	D-
3	D+
4	Ground
5	StdA_SSRX-
6	StdA_SSRX+
7	GND_DRAIN
8	StdA_SSTX-
9	StdA_SSTX+

Front Panel USB 2.0 Header Pin Definitions			
Pin#	**Definition**	**Pin#**	**Definition**
1	+5V	2	+5V
3	USB_PN2	4	USB_PN3
5	USB_PP2	6	USB_PP3
7	Ground	8	Ground
9	Key	10	Ground

COM Header

There is one COM header (COM1) on the motherboard. Refer to the motherboard layout diagram in Section 1.4.

3.4 Jumpers

Explanation of Jumpers

To modify the operation of the motherboard, jumpers are used to choose between optional settings. Jumpers create shorts between two pins to change the function associated with it. Pin 1 is identified with a square solder pad on the printed circuit board. Refer to the motherboard layout diagram in Section 1.5 for jumper locations.

Note: On a two-pin jumper, "Closed" means the jumper is on both pins and "Open" indicates the jumper is either on only one pin or has been completely removed.

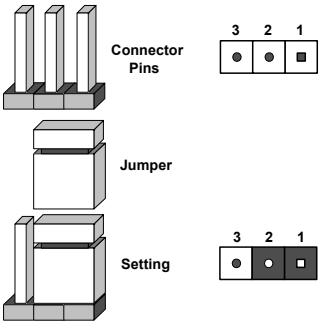

CMOS Clear

JBT1 is used to clear CMOS, which will also clear any passwords. Instead of pins, this jumper consists of contact pads to prevent accidentally clearing the contents of CMOS.

To Clear CMOS

1. First power down the system and unplug the power cord(s).
2. Remove the cover of the chassis to access the motherboard.
3. Remove the onboard battery from the motherboard.
4. Short the CMOS pads with a metal object such as a small screwdriver for at least four seconds.
5. Remove the screwdriver (or shorting device).
6. Replace the cover, reconnect the power cord(s) and power on the system.

Notes: Clearing CMOS also clears all passwords. Do *not* use the PW_ON connector to clear CMOS.

JBT1 contact pads

Watch Dog

Watch Dog (JWD1) is a system monitor that can reboot the system when a software application hangs. Close pins 1-2 to reset the system if an application hangs. Close pins 2-3 to generate a non-maskable interrupt (NMI) signal for the application that hangs. Refer to the table below for jumper settings. The Watch Dog must also be enabled in the BIOS.

Watch Dog Jumper Settings	
Jumper Setting	**Definition**
Pins 1-2	Reset
Pins 2-3	NMI
Open	Disabled

VGA Enable/Disable

Jumper JPG1 allows the user to enable the onboard VGA connector. The default setting is pins 1-2 to enable the connection. Refer to the table below for jumper settings.

VGA Enable/Disable Jumper Settings	
Jumper Setting	**Definition**
Pins 1-2	Enabled
Pins 2-3	Disabled

ME Manufacturing Mode

Close pins 2-3 of jumper JPME2 to bypass SPI flash security and force the system to operate in manufacturing mode. This allows the user to flash the system firmware from a host server for system setting modifications. Refer to the table below for jumper settings. The default setting is Normal.

Manufacturing Mode Jumper Settings	
Jumper Setting	**Definition**
Pins 1-2	Normal
Pins 2-3	Manufacturing Mode

BIOS Recovery

Close pins 2 and 3 of jumper JBR1 for BIOS recovery. The default setting is on pins 1 and 2 for normal operation. Refer to the table below for jumper settings. The default setting is Normal.

BIOS Recovery Jumper Settings	
Jumper Setting	**Definition**
Pins 1-2	Normal (Default)
Pins 2-3	BIOS Recovery

SMBus to PCI Slots

Jumpers JI^{2}C1 and JI^{2}C2 allow you to connect the System Management Bus (I^{2}C) to the PCI-E/PCI slots. Both jumpers must use the same setting. (JI^{2}C1 controls the clock and JI^{2}C2 controls the data). The default setting is Disabled.

SMBus to PCI Slots Jumper Settings		
JI^{2}C1 Setting	**JI^{2}C2 Setting**	**Definition**
JI^{2}C1: Pins 1-2	JI^{2}C2: Pins 1-2	Enabled
JI^{2}C1: Pins 2-3	JI^{2}C2: Pins 2-3	Disabled (Default)

LAN Enable/Disable

Use jumper JPL1 to enable or disable the four LAN ports.

LAN Port Enable/Disable Jumper Settings	
Jumper Setting	**Definition**
Pins 1-2	Enabled (Default)
Pins 2-3	Disabled

BIOS Recovery

Close pins 2 and 3 of jumper JBR1 for BIOS recovery. The default setting is on pins 1 and 2 for normal operation. Refer to the table below for jumper settings. The default setting is Normal.

BIOS Recovery Jumper Settings	
Jumper Setting	**Definition**
Pins 1-2	Normal (Default)
Pins 2-3	BIOS Recovery

3.5 LED Indicators

LAN LEDs

Four LAN ports (LAN1 - LAN4) are located on the I/O panel of the motherboard. Each Ethernet LAN port has two LEDs. The green LED indicates activity, while the other Link LED may be green, amber, or off to indicate the speed of the connection. Refer to the table below for more information.

LAN LED (Connection Speed Indicator)	
LED Color	**Definition**
Off	10 Mbps
Green	100 Mbps
Amber	1 Gb/s

IPMI LAN LEDs

In addition to LAN1 - LAN4, an IPMI LAN is also located on the I/O panel. The amber LED on the right indicates activity, while the green LED on the left indicates the speed of the connection. Refer to the table below for more information.

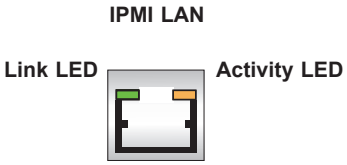

IPMI LAN LEDs		
	Color/State	**Definition**
Link (left)	Green: Solid Amber: Solid	100 Mbps 1Gbps
Activity (Right)	Amber: Blinking	Active

BMC Heartbeat LED

A BMC Heartbeat LED is located at LEDM1 on the motherboard. When LEDM1 is blinking, the BMC is functioning normally. Refer to the table below for more information.

BMC Heartbeat LED Indicator	
LED Color	**Definition**
Green: Blinking	BMC Normal

Onboard Power LED

The Onboard Power LED is located at LEDPWR on the motherboard. When this LED is on, the system is on. Turn off the system and unplug the power cord before removing or installing components. Refer to the table below for more information.

Onboard Power LED Indicator	
LED Color	**Definition**
Off	System Off (power cable not connected)
Green	System On
Blinking	System Suspended

Chapter 4

Software

This section describes the installation of drivers and management programs for the system.

4.1 Driver Installation

The Supermicro FTP site contains drivers and utilities for your system at ftp://ftp.supermicro.com. Some of these must be installed, such as the chipset driver.

After accessing the FTP site, go into the CDR_Images directory and locate the ISO file for your motherboard. Download this file to create a DVD of the drivers and utilities it contains. (You may also use a utility to extract the ISO file if preferred.)

After creating a DVD with the ISO files, insert the disk into the DVD drive on your system and the display shown in Figure 4-1 should appear.

Another option is to go to the Supermicro website at http://www.supermicro.com/products/. Find the product page for your motherboard here, where you may download individual drivers and utilities to your hard drive or a USB flash drive and install from there.

Note: To install the Windows OS, please refer to the instructions posted on our website at http://www.supermicro.com/support/manuals/.

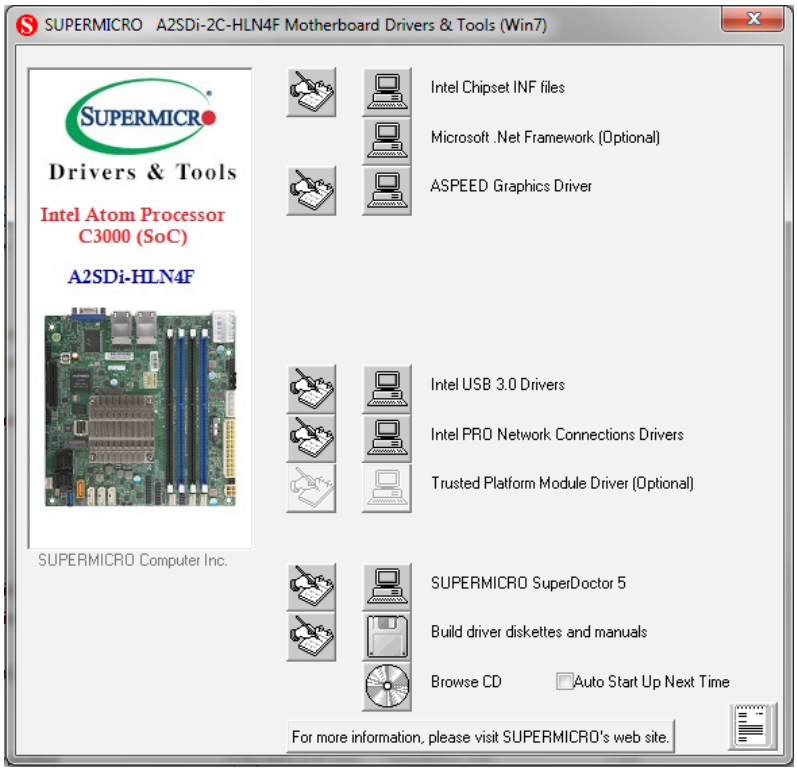

Figure 4-1. Driver & Tool Installation Screen

Note: Click the icons showing a hand writing on paper to view the readme files for each item. Click the computer icons to the right of these items to install each item (from top to the bottom) one at a time. After installing each item, you must re-boot the system before moving on to the next item on the list. The bottom icon with a CD on it allows you to view the entire contents.

4.2 SuperDoctor® 5

The Supermicro SuperDoctor 5 is a program that functions in a command-line or web-based interface for Windows and Linux operating systems. The program monitors such system health information as CPU temperature, system voltages, system power consumption, fan speed, and provides alerts via email or Simple Network Management Protocol (SNMP).

SuperDoctor 5 comes in local and remote management versions and can be used with Nagios to maximize your system monitoring needs. With SuperDoctor 5 Management Server (SSM Server), you can remotely control power on/off and reset chassis intrusion for multiple systems with SuperDoctor 5 or IPMI. SuperDoctor 5 Management Server monitors HTTP, FTP, and SMTP services to optimize the efficiency of your operation.

Note: The default User Name and Password for SuperDoctor 5 is ADMIN / ADMIN.

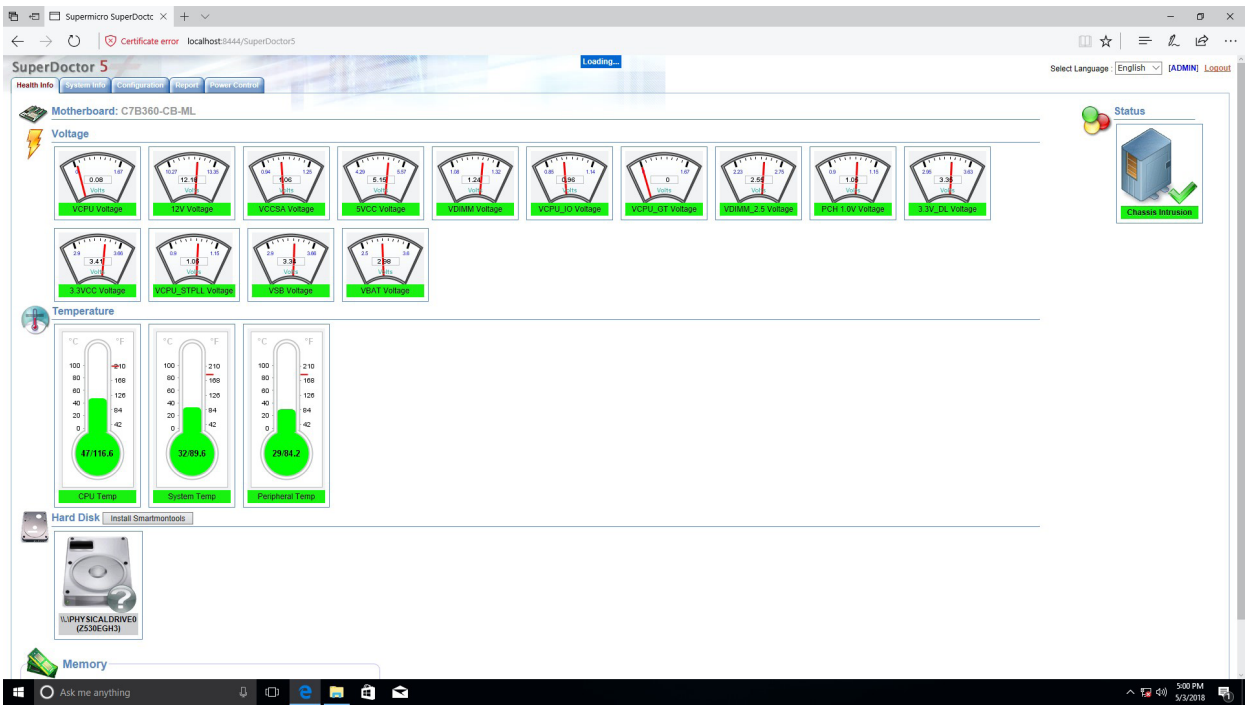

Figure 4-2. SuperDoctor 5 Interface Display Screen (Health Information)

4.3 IPMI

The A2SDi-4C-HLN4F/A2SDi-8C-HLN4F supports the Intelligent Platform Management Interface (IPMI) v2.0. IPMI is used to provide remote access, monitoring and management. There are several BIOS settings that are related to IPMI.

For general documentation and information on IPMI, please visit our website at: http://www.supermicro.com/products/nfo/IPMI.cfm.

Chapter 5

BIOS

5.1 Introduction

This chapter describes the AMIBIOS™ Setup utility for the A2SDi-HLN4F series motherboard. The BIOS is stored on a chip and can be easily upgraded using a flash program.

Note: Due to periodic changes to the BIOS, some settings may have been added or deleted and might not yet be recorded in this manual. Please refer to the Manual Download area of our website for any changes to the BIOS that may not be reflected in this manual.

Starting the Setup Utility

To enter the BIOS Setup Utility, hit the <Delete> key while the system is booting-up. (In most cases, the <Delete> key is used to invoke the BIOS setup screen. There are a few cases when other keys are used, such as <F1>, <F2>, etc.) Each main BIOS menu option is described in this manual.

The Main BIOS screen has two main frames. The left frame displays all the options that can be configured. “Grayed-out” options cannot be configured. The right frame displays the key legend. Above the key legend is an area reserved for a text message. When an option is selected in the left frame, it is highlighted in white. Often a text message will accompany it. (Note that BIOS has default text messages built in. We retain the option to include, omit, or change any of these text messages.) Settings printed in **Bold** are the default values.

A " ▶" indicates a submenu. Highlighting such an item and pressing the <Enter> key will open the list of settings within that submenu.

The BIOS setup utility uses a key-based navigation system called hot keys. Most of these hot keys (<F1>, <Enter>, <ESC>, <Arrow> keys, etc.) can be used at any time during the setup navigation process.

5.2 Main Setup

When you first enter the AMI BIOS setup utility, you will enter the Main setup screen. You can always return to the Main setup screen by selecting the Main tab on the top of the screen. The Main BIOS setup screen is shown below and the following items will be displayed:

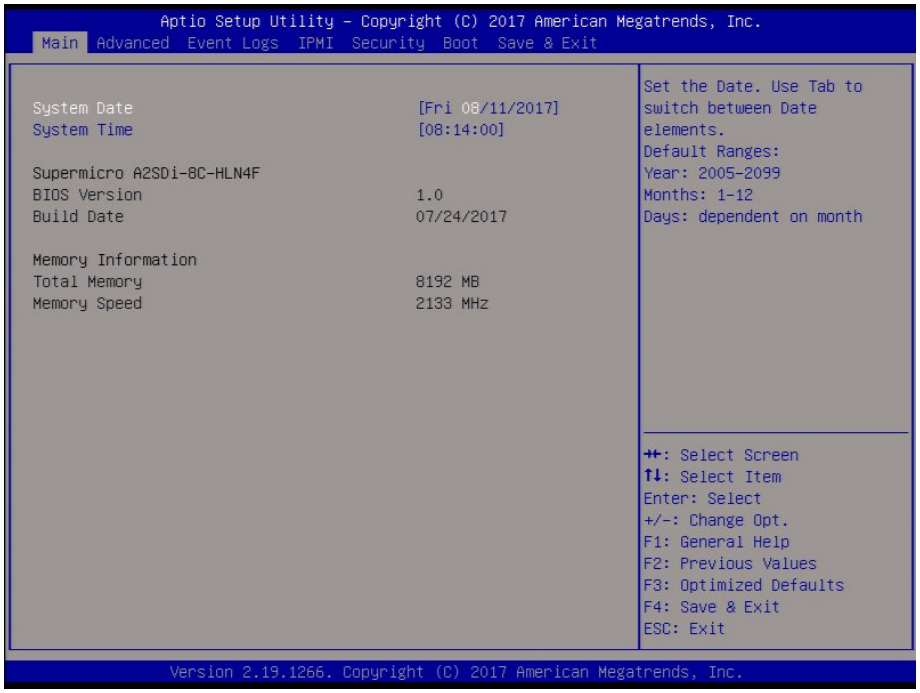

System Date/System Time

Use this option to change the system date and time. Highlight *System Date* or *System Time* using the arrow keys. Enter new values using the keyboard. Press the <Tab> key or the arrow keys to move between fields. The date must be entered in MM/DD/YYYY format. The time is entered in HH:MM:SS format.

> **Note:** The time is in the 24-hour format. For example, 5:30 P.M. appears as 17:30:00. The date's default value is the BIOS build date after RTC reset.

Supermicro A2SDi-2C/4C/8C/8C+/12C/16C-HLN4F

BIOS Version

This item displays the version of the BIOS ROM used in the system.

Build Date

This item displays the date when the version of the BIOS ROM used in the system was built.

Memory Information

Total Memory

This item displays the total size of memory available in the system.

Memory Speed

This item displays the default speed of the memory modules installed in the system.

5.3 Advanced

Use the arrow keys to select Advanced setup and press <Enter> to access the submenu items:

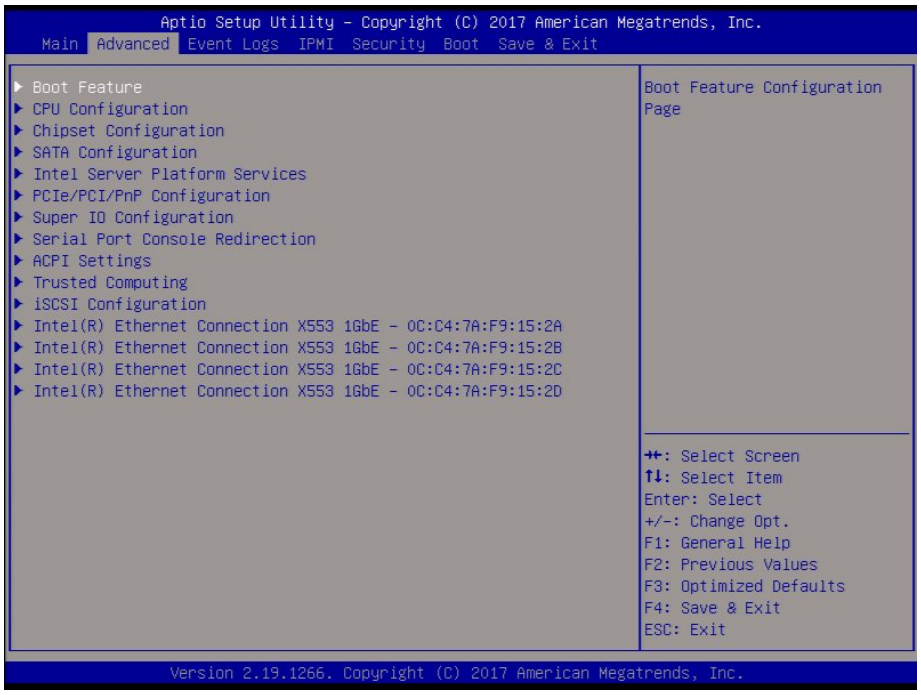

Warning: Take caution when changing the Advanced settings. An incorrect value, a very high DRAM frequency or an incorrect BIOS timing setting may cause the system to malfunction. When this occurs, restore to default manufacturer settings.

▶Boot Feature

Quiet Boot

Use this feature to select the screen display between POST messages or the OEM logo at bootup. Select Disabled to display the POST messages. Select Enabled to display the OEM logo instead of the normal POST messages. The options are Disabled and **Enabled**.

Bootup NumLock State

Use this feature to set the Power-on state for the Numlock key. The options are Off and **On**.

Wait For "F1" If Error

This feature forces the system to wait until the F1 key is pressed if an error occurs. The options are Disabled and **Enabled**.

Power Configuration

Watch Dog Function

If enabled, the Watch Dog timer will allow the system to reboot when it is inactive for more than 5 minutes. The options are **Disabled** and Enabled.

Power Button Function

This feature controls how the system shuts down when the power button is pressed. Select 4 Seconds Override for the user to power off the system after pressing and holding the power button for 4 seconds or longer. Select Instant Off to instantly power off the system as soon as the user presses the power button. The options are 4 Seconds Override and **Instant Off.**

Restore on AC Power Loss

Use this feature to set the power state after a power outage. Select Power Off for the system power to remain off after a power loss. Select Power On for the system power to be turned on after a power loss. Select Last State to allow the system to resume its last power state before a power loss. The options are Stay Off, Power On, and **Last State**.

▶CPU Configuration

The following CPU information will display:

- Displays the CPU model
- Processor ID
- Microcode Revision
- Processor Frequency
- CPU BCLK Frequency
- L1 Cache RAM
- L2 Cache RAM

EIST (GV3)

EIST (Enhanced Intel SpeedStep Technology) allows the system to automatically adjust processor voltage and core frequency to reduce power consumption and heat dissipation. The options are Disable and **Enable.**

BIOS Request Frequency

Use this feature to instruct how much frequency will be delivered to the processor. The options are Disable and **Enable**.

Turbo

Select Enable for processor cores to run faster than the frequency specified by the manufacturer. The options are Disable and **Enable**.

The feature above is not available when EIST (GV3) is disabled.

TM1

Select Enable to activate TM1 support for system thermal monitoring. TM1 allows the CPU to regulate its power consumption based upon the modulation of the CPU Internal clock when the CPU temperature reaches a pre-defined overheating threshold. The options are Disable and **Enable**.

TM2 Mode

Use this feature to select the throttling mode for TM2. The options are LFM Throttling and **Adaptive Throttling**.

The feature above is not available when EIST (GV3) or TM1 is disabled.

Dynamic Self Refresh

Select Enable to support Dynamic Self-Refreshing for the onboard memory controller. The options are **Disable** and Enable.

CPU C State

Select Eanbled to enhance the Cx state of the CPU. Reboot the system for this feature to take effect. The options are Disable and **Enable**.

Package C State limit

Use this item to set the limit on the C-State package register. The options are No Pkg C-State, No S0Ix, and **No Limit**.

The feature above is not available when CPU C State is disabled.

Max Core C-State

Use this feature to select the CPU C-state. The options are C1 and **C6**.

The feature above is not available when CPU C State is disabled.

Enhanced Halt State (C1E)

Select Enable to enable "Enhanced Halt State" support, which will significantly reduce the CPU's power consumption by minimizing the CPU's clock cycles and voltage use during a Halt State. The options are Disable and **Enable**.

The feature above is not available when CPU C State is disabled.

Monitor/Mwait

Select Enable to enable the Monitor/Mwait instructions. The Monitor instructions monitors a region of memory for writes, and MWait instructions instruct the CPU to stop until the monitored region begins to write. The options are Disable and **Enable**.

The feature above is not available when CPU C State is disabled.

L1 Prefetcher

If enabled, the hardware prefetcher will prefetch streams of data and instructions from the main memory to the L1 cache to improve CPU performance. The options are **Enable** and Disable.

L2 Prefetcher

If enabled, the hardware prefetcher will prefetch streams of data and instructions from the main memory to the L2 cache to improve CPU performance. The options are **Enable** and Disable.

ACPI 3.0 T-States

Select Enable to support ACPI (Advanced Configuration and Power Interface) 3.0 T-States to determine how the processor will report to the operating system during CPU-Throttling states. The options are **Disable** and Enable.

Max CPUID Value Limit

Use this feature to set the maximum CPU ID value. Enable this feature to boot the legacy operating systems that cannot support processors with extended CPUID functions. The options are Enable and **Disable**.

Execute Disable Bit

Set to Enable for Execute Disable Bit support, which will allow the processor to designate areas in the system memory where an application code can execute and where it cannot, thus preventing a worm or a virus from flooding illegal codes to overwhelm the processor or damaging the system during a virus attack. The options are Disable and **Enable**. (Refer to Intel and Microsoft websites for more information.)

Virtualization Technology

Select Enable to use Intel Virtualization Technology to allow one platform to run multiple operating systems and applications in independent partitions, creating multiple virtual systems in one physical computer. The options are Disable and **Enable**.

Extended APIC (Advanced Programmable Interrupt Controller)

Based on the Intel Hyper-Threading technology, each logical processor (thread) is assigned 256 APIC IDs (APIDs) in 8-bit bandwidth. When this item is set to Enable, the APIC ID will be expanded from 8 bits to 16 bits to provide 512 APIDs to each thread to enhance CPU performance. The options are Disable and **Enable**.

AES-NI

Select Enable to use the Intel Advanced Encryption Standard (AES) New Instructions (NI) to ensure data security. The options are **Enable** and Disable.

Lock PACKAGE_RAPL_LIMIT

Use this feature to lock the MSR 0x610 bit. The options are **Disable** and Enable.

PL1 Time Window

Use this feature to define the Running Average Power Limit (RAPL) time window 1 in miliseconds. The default setting is **45**. Use the "+" or "-" keys to define the setting.

PL1 Power Level

Use this feature to define the Running Average Power Limit (RAPL) power limit 1 in Watts. The default setting is **25**. Use the "+" or "-" keys to define the setting.

PL2 Power Level

Use this feature to define the Running Average Power Limit (RAPL) power limit 2 in Watts. The default setting is **29**. Use the "+" or "-" keys to define the setting.

Active Processor Cores

Use this feature to set the number of processor cores that will be activated for each CPU. Select **0** to activate all processor cores**.**

▶Chipset Configuration

Warning: Setting the wrong values in the following sections may cause the system to malfunction.

▶North Bridge Configuration

North Bridge Configuration

Memory Information

- MRC Version
- Total Memory
- Memory Frequency

VT-d

Select Enabled to enable Intel Virtualization Technology support for Direct I/O VT-d by reporting the I/O device assignments to VMM through the DMAR ACPI Tables. This feature offers fully-protected I/O resource-sharing across the Intel platforms, providing the user with greater reliability, security and availability in networking and data-sharing. The options are Disabled and **Enabled**.

Interrupt Remapping

Use this feature to enable Interrupt Remapping support, which detects and controls external interrupt requests. The options are Disabled and **Enabled**.

▶NonVolatile Memory Setup

Method

Use this feature to select how data will be saved after power loss. The options are **Disabled** and NVDIMM.

If the feature above is set to NVDIMM, the following items will become available for configuration:

SoC Pwr Loss Support

Use this feature to enable the internal detection of an Asynchronous DRAM Refresh (ADR) entry instead of a CPLD. The options are **Disabled** and Enabled.

Cache Flushing

Use this feature to select the amount of cache that should be flushed. The options are **MemCtrlr only** and L1, L2 and MemCtrlr.

ADR State Source

Use this feature to select whether the ADR State source is internal or external. The options are **external** and internal.

▶Internal Pwr Loss Event Setup

SoC Pwr Loss Support

The feature is always **Disabled**.

PMC Reset

Enable this feature to receive a notification when there is a global reset because of an SMBus slave power down. The options are Disabled and **Enabled**.

Power Button Override

When this feature is set to Enabled, it sends a notification when there is a power button override. The options are Disabled and **Enabled**.

ME Pwr Button Override

When this feature is set to Enabled, it sends a notification when ME initiates the Power Button Override. The options are Disabled and **Enabled.**

ME WDT

When this feature is Enabled, it sends a notification when the ME watchdog timer expires. The options are Disabled and **Enabled**.

ME Reset

When this feature is set to Enabled, it sends a notification when ME initiates a global reset. The options are Disabled and **Enabled**.

PMC WDT

When this feature is Enabled, it sends a notification when the PMC watchdog timer expires. The options are Disabled and **Enabled**.

ME Uncorr Error

When this feature is set to Enabled, it sends a notification when there is an uncorrectable ME error. The options are Disabled and **Enabled**.

SYS_PWROK

This feature sends a notification when there is a system power failure. SYS_PWROK informs the PCH that power to system components is stable. The options are **Disabled** and Enabled.

PMC Parity Error

Set this feature to Enabled to receive PMC parity error notifications. The options are **Disabled** and Enabled.

Return Power

Set this feature to Enabled for the system to power up within four seconds after an ADR entry. The options are Disabled and **Enabled**.

Interleaving

Set this feature to Enabled for NVDIMM interleaving support. Interleaving is a technique that increases memory speed. The options are **Disabled** and Enabled.

Restore

When this feature is set to Enabled, data is restored to NVDIMM after a system power-up. The options are Disable and **Enabled**.

Erase & ARM

Select Enabled to enable erasing and arming of NVDIMM after data recovery. The options are Disabled and **Enabled**.

NVDIMM Battery

Inactive - charging

LAB Start Location	[Fixed LAB]
LAB	[0]
Size(MB)	[1024]

The feature above is not available when the Method feature is disabled.

Test NonVol Mode:

Use this feature to force a nonvolatile memory flow. The options are **Disable**, ADR recovery, ADR-C2F save, and ADR-C2F restore.

Fast Boot

Use this feature to enable or disable fast path through the memory reference code. The options are **Enabled** and Disabled.

Command Address Parity

Use this feature to address the DDR4 command parity. The options are **Disabled** and Enabled.

Memory Frequency

Use this feature to set the maximum memory frequency for onboard memory modules. The options are DDR-1600, DDR-1867, DDR-2133, and **DDR-2400**.

MMIO Size / BMBOUND Base

Use this feature to select the memory mapped IO size and BMBOUND base setting. The low for the two settings will always be 4GB. The options are **Auto**, 1024M/3072M, and 3072M/1024M.

TCL Performance

Use this feature to enable the CAS Latency (tCL) to increase memory performance. The options are Disabled and **Enabled**.

Memory Preservation

Enable this feature for the memory content to be preserved through a warm reset. The options are **Disabled** and Enabled.

Patrol Scrub Enable

Patrol Scrubbing is a process that allows the CPU to correct correctable memory errors detected in a memory module and send the correction to the requestor (the original source). When this item is set to Enable, the IO hub will read and write back one cache line every 16K cycles if there is no delay caused by internal processing. By using this method, roughly 64GB of memory behind the IO hub will be scrubbed every day. The options are **Enabled** and Disabled.

Patrol Scrub Period

Use this feature to select the Patrol Scrub period. The options are **24 hours**, 10 hours, 4 hours, and 1 hour.

Demand Scrub Enable

Demand Scrubbing is a process that allows the CPU to correct correctable memory errors found in a memory module. When the CPU or I/O issues a demand-read command, and the read data from memory turns out to be a correctable error, the error is corrected and sent to the requestor (the original source). Memory is corrected as well. Select Enable to use Demand Scrubbing for ECC memory correction. The options are **Enabled** and Disabled.

Write Data Early Enable

Use this feature to enable or disable write data early. The options are **Disabled** and Enabled.

Select Refresh Rate

Use this feature to select the memory refresh rate. The options are **1x/2x** and 1x/2x/4x.

CKE Power Down

Clock enable (CKE) Power Down controls the low power down for the memory. The options are **Disabled,** Active Power Down, and Precharge Power Down.

Memory Thermal Throttling

Memory thermal throttling is a power management feature that monitors read and write activities to control power consumption. The options are Auto and **Disabled**.

If the feature above is set to Auto or Enabled, CLTT Mode and MEMTRIP are available to configure:

CLTT Mode

Use this feature to select the Closed Loop Thermal Throttling (CLTT) mode. The options are **Normal** and Passthru.

MEMTRIP

Use this feature to enable or disable MEMTRIP. The options are **Disabled** and Enabled.

Scrambler

This feature scrambles data in the memory and makes it inaccessible. The options are Disabled and **Enabled**.

Slow Power Down Exit

Use this feature to enable or disable the slow power down exit from pre-charge. The options are Disabled and **Enabled**.

▶South Bridge Configuration

South Bridge Configuration

- USB Module Version
- USB Controllers
- USB Devices

Legacy USB Support

Select Enabled to support onboard legacy USB devices. Select Auto to disable legacy support if there are no legacy USB devices present. Select Disable to have all USB devices available for EFI applications only. The options are **Enabled,** Disabled, and Auto.

XHCI Hand-Off

This is a work-around solution for operating systems that do not support XHCI (Extensible Host Controller Interface) hand-off. The XHCI ownership change should be claimed by the XHCI driver. The settings are **Enabled** and Disabled.

Port 60/64 Emulation

Select Enabled for I/O port 60h/64h emulation support, which in turn, will provide complete legacy USB keyboard support for the operating systems that do not support legacy USB devices. The options are Disabled and **Enabled**.

The following two options are displayed if they are detected by and available on the system:

Flexible I/O Selection

This is a feature on the -2C/4C models only. Up to a total of 8 in selected combinations of SATA ports and four lanes on the PCIe slot can be made available at any given time. Mini SAS offers 4 SATA ports from the Mini SAS HD header. The options are [Mini SAS/SATA (3:0)], **[PCIe x2/Mini SAS/SATA (1:0)]**, [PCIe x4/SATA (3:0)], and [PCIe x4/Mini SAS].

▶IQAT Configuration

IQAT

Select Enabled to hide IQAT devices from the operating system. The options are Disabled and **Enabled**.

Set 64B MRR/MPL

Use this feature to enable setting for the 64B MRR/MPL in IQAT DevCTL register. The options are Disabled and **Enabled**.

▶SATA Configuration

▶SATA0

SATA 0 Enable controller

This item enables or disables the onboard SATA controller supported by the processor. The options are **Enabled** and Disabled.

SATA 0 LPM (Link Power Management)

When this item is set to Enabled, the SATA AHCI controller manages the power usage of the SATA link. The controller will put the link in a low power mode during extended periods of I/O inactivity and will return the link to an active state when I/O activity resumes. The options are Enabled and **Disabled**.

If the feature above is set to Enabled, SATA 0 ALPM is available to configure:

SATA 0 ALPM

Use this feature to enable or disable Aggressive Link Power Management. The options are **Enabled** and Disabled.

SATA 0 SGPIO/LED

Use this feature to select SATA SGPIO or SATA LED. The options are SATA SGPIO and **SATA LED**.

▶I-SATA4 ~ I-SATA11

This following information is displayed for each SATA drive entry:

- Device Information
- Device Size

Enable/disable port

Use this feature to disable or enable the SATA port number. The options are **Enabled** and Disabled.

Hot Plug

Set this item to Enabled for hot plug support, allowing for a SATA disk drive to be replaced without shutting down the system. The options are **Enabled** and Disabled.

Spin up

When the value of an edge detect or the value of an image binary (pixel) of a device is from 0 to 1, select Enabled to allow the PCH to start a COMRESET initialization sequence on this device. The options are Enabled and **Disabled**.

▶SATA1

SATA 1 Enable controller

This item enables or disables the onboard SATA controller supported by the Intel PCH chip. The options are **Enabled** and Disabled.

SATA 1 LPM (Link Power Management)

When this item is set to Enabled, the SATA AHCI controller manages the power usage of the SATA link. The controller will put the link in a low power mode during extended periods of I/O inactivity and will return the link to an active state when I/O activity resumes. The options are Enabled and **Disabled**.

If the feature above is set to Enabled, SATA 1 ALPM is available for configuration:

SATA 1 ALPM

Use this feature to enable or disable Aggressive Link Power Management. The options are Enabled and **Disabled**.

SATA 1 SGPIO/LED

Use this feature to select SATA SGPIO or SATA LED. The options are SATA SGPIO and **SATA LED**.

▶I-SATA0 ~ I-SATA3, I-SATA (M.2)

This following information is displayed for each SATA drive entry:

- Device Information
- Device Size

Enable/disable port

Use this feature to disable or enable the SATA port number. The options are **Enabled** and Disabled.

Hot Plug

Set this item to Enabled for hot plug support, allowing for a SATA disk drive to be replaced without shutting down the system. The options are **Enabled** and Disabled.

Spin up

When the value of an edge detect or the value of an image binary (pixel) of a device is from 0 to 1, select Enabled to allow the PCH to start a COMRESET initialization sequence on this device. The options are Enabled and **Disabled**.

▶Intel Server Platform Services

This feature displays the following ME information:

- General ME Configuration
- Operational Firmware Version
- ME Firmware Type
- Backup Firmware Version
- Recovery Firmware Version
- ME Firmware Features
- ME Firmware Status #1
- ME Firmware Status #2
  - Current State
  - Error Code

▶PCIe/PCI/PnP Configuration

The following PCI information will be displayed:

- PCI Bus Driver Version
- PCI Devices Common Settings:

Above 4G Decoding (Available if the system supports 64-bit PCI decoding)

Select Enabled to decode a PCI device that supports 64-bit in the space above 4G Address. The options are Enabled and **Disabled**.

SR-IOV Support (Available if the system supports Single-Root Virtualization)

Select Enabled for Single-Root IO Virtualization (SR-IOV) support. SR-IOV is an extension of the PCI Express interface and consists of two functions: physical functions (PF) and virtual functions (VF). PF is the primary function and is used to control and configure PCI Express devices, whereas VF is the lightweight function that offers limited configuration. The options are Enabled and **Disabled.**

Maximum Payload

Select Auto for the system BIOS to automatically set the maximum payload value for a PCI-E device to enhance system performance. The options are **Auto**, 128 Bytes, 256 Bytes, 512 Bytes, 1024 Bytes, 2048 Bytes, and 4096 Bytes.

Maximum Read Request

Select Auto for the system BIOS to automatically set the maximum size for a read request for a PCI-E device to enhance system performance. The options are **Auto**, 128 Bytes, 256 Bytes, 512 Bytes, 1024 Bytes, 2048 Bytes, and 4096 Bytes.

ASPM Support

Use this item to set the Active State Power Management (ASPM) level for a PCI-E device. Select Auto for the system BIOS to automatically set the ASPM level based on the system configuration. Select Disabled to disable ASPM support. Select Force L0s to force all links to L0s state. The options are **Disabled**, Auto, and Force L0s.

Warning: Enabling ASPM support may cause some PCI-E devices to fail!

ARI Forwarding

Select Enabled to lift a traditional Device Number restriction when turning a Type1 Configuration request into a Type0 Configuration request to permit access to extended functions in an ARI Device immediately below the port. The options are **Disabled** and Enabled.

CPU SLOT7 PCI-E 3.0 X4 OPROM

Use this item to select the firmware type for the add-on card for this slot. The options are Disabled, Legacy, and **EFI**.

M.2 PCI-E 3.0 X2 OPROM

Use this item to select the firmware type for the add-on card for this slot. The options are Disabled, Legacy, and **EFI**.

Onboard LAN Option ROM Type

Use this item to select the Onboard LAN Option ROM type. The options are Disabled, Legacy, and **EFI**.

Onboard Video Option ROM

Use this item to select the Onboard Video Option ROM type. The options are Disabled, Legacy, and **EFI**.

VGA Priority

Use this item to select the active video type. The options are **Onboard** and Offboard.

Network Stack

Select Enabled to enable PXE (Preboot Execution Environment) or UEFI (Unified Extensible Firmware Interface) for network stack support. The options are **Enabled** and Disabled.

If "Network Stack" is set to Enabled, the following items will display:

Ipv4 PXE Support

Use this feature to enable Ipv4 PXE Boot Support. If this feature is disabled, it will not create the Ipv4 PXE Boot option. The options are Disabled and **Enabled**.

Ipv6 PXE Support

Use this feature to enable Ipv6 PXE Boot Support. If this feature is disabled, it will not create the Ipv6 PXE Boot option. The options are **Disabled** and Enabled.

PXE Boot Wait Time

Use this feature to select the wait time to press the ESC key to abort the PXE boot. The default is **0**.

Media Detect Count

Use this feature to select the wait time in seconds to detect LAN media. The default is **1**.

▶Super IO Configuration

Super IO Chip AST2400

▶Serial Port 1 Configuration

COM1

Serial Port 1

Select Enabled to enable the onboard serial port specified by the user. The options are **Enabled** and Disabled.

Device Settings

This item displays the base I/O port address and the Interrupt Request address of a serial port specified by the user.

Note: This item is hidden when Serial Port 1 is set to Disabled.

Serial Port 1 Change Settings

This feature specifies the base I/O port address and the Interrupt Request address of Serial Port 1. Select **Auto** for the BIOS to automatically assign the base I/O and IRQ address to a serial port specified. The options are **Auto**, (IO=3F8h; IRQ=4), (IO=3F8h; IRQ=3, 4, 5, 6, 7, 9, 10, 11, 12), (IO=2F8h; IRQ=3, 4, 5, 6, 7, 9, 10, 11, 12); (IO=3E8h; IRQ=3, 4, 5, 6, 7, 9, 10, 11, 12), and (IO=2E8h; IRQ=3, 4, 5, 6, 7, 9, 10, 11, 12).

▶Serial Port Console Redirection

COM 1 Console Redirection

Select Enabled to enable COM Port 1 for Console Redirection, which will allow a client machine to be connected to a host machine at a remote site for networking. The options are Enabled and **Disabled**.

If the feature above is set to Enabled, the following items will become available for configuration:

▶COM1 Console Redirection Settings

COM1 Terminal Type

This feature allows the user to select the target terminal emulation type for Console Redirection. Select VT100 to use the ASCII Character set. Select VT100+ to add color and function key support. Select ANSI to use the Extended ASCII Character Set. Select VT-UTF8 to use UTF8 encoding to map Unicode characters into one or more bytes. The options are VT100, **VT100+**, VT-UTF8, and ANSI.

COM1 Bits Per second

Use this item to set the transmission speed for a serial port used in Console Redirection. Make sure that the same speed is used in the host computer and the client computer. A lower transmission speed may be required for long and busy lines. The options are 9600, 19200, 38400, 57600, and **115200** (bits per second).

COM1 Data Bits

Use this feature to set the data transmission size for Console Redirection. The options are 7 (Bits) and **8 (Bits)**.

COM1 Parity

A parity bit can be sent along with regular data bits to detect data transmission errors. Select Even if the parity bit is set to 0, and the number of 1's in data bits is even. Select Odd if the parity bit is set to 0, and the number of 1's in data bits is odd. Select None if you do not want to send a parity bit with your data bits in transmission. Select Mark to add a mark as a parity bit to be sent along with the data bits. Select Space to add a Space as a parity bit to be sent with your data bits. The options are **None**, Even, Odd, Mark, and Space.

COM1 Stop Bits

A stop bit indicates the end of a serial data packet. Select 1 Stop Bit for standard serial data communication. Select 2 Stop Bits if slower devices are used. The options are **1** and 2.

COM1 Flow Control

Use this item to set the flow control for Console Redirection to prevent data loss caused by buffer overflow. Send a "Stop" signal to stop sending data when the receiving buffer is full. Send a "Start" signal to start sending data when the receiving buffer is empty. The options are **None** and Hardware RTS/CTS.

COM1 VT-UTF8 Combo Key Support

Select Enabled to enable VT-UTF8 Combination Key support for ANSI/VT100 terminals. The options are Disabled and **Enabled.**

COM1 Recorder Mode

Select Enabled to capture the data displayed on a terminal and send it as text messages to a remote server. The options are **Disabled** and Enabled.

COM1 Resolution 100x31

Select Enabled for extended-terminal resolution support. The options are Disabled and **Enabled**.

COM1 Putty KeyPad

This feature selects Function Keys and KeyPad settings for Putty, which is a terminal emulator designed for the Windows OS. The options are **VT100**, LINUX, XTERMR6, SCO, ESCN, and VT400.

SOL

SOL Console Redirection

Select Enabled to use the SOL port for Console Redirection. The options are Disabled and **Enabled.**

If the feature above is set to Enabled, the following items will become available for configuration:

▶SOL Console Redirection Settings

Use this feature to specify how the host computer will exchange data with the client computer, which is the remote computer used by the user.

SOL Terminal Type

Use this feature to select the target terminal emulation type for Console Redirection. Select VT100 to use the ASCII Character set. Select VT100+ to add color and function key support. Select ANSI to use the Extended ASCII Character Set. Select VT-UTF8 to use UTF8 encoding to map Unicode characters into one or more bytes. The options are VT100, **VT100+**, VT-UTF8, and ANSI.

SOL Bits Per second

Use this feature to set the transmission speed for a serial port used in Console Redirection. Make sure that the same speed is used in the host computer and the client computer. A lower transmission speed may be required for long and busy lines. The options are 9600, 19200, 38400, 57600, and **115200** (bits per second).

SOL Data Bits

Use this feature to set the data transmission size for Console Redirection. The options are 7 (Bits) and **8 (Bits)**.

SOL Parity

A parity bit can be sent along with regular data bits to detect data transmission errors. Select Even if the parity bit is set to 0, and the number of 1's in data bits is even. Select Odd if the parity bit is set to 0, and the number of 1's in data bits is odd. Select None if you do not want to send a parity bit with your data bits in transmission. Select Mark to add a mark as a parity bit to be sent along with the data bits. Select Space to add a Space as a parity bit to be sent with your data bits. The options are **None**, Even, Odd, Mark and Space.

SOL Stop Bits

A stop bit indicates the end of a serial data packet. Select 1 Stop Bit for standard serial data communication. Select 2 Stop Bits if slower devices are used. The options are **1** and 2.

SOL Flow Control

Use this feature to set the flow control for Console Redirection to prevent data loss caused by buffer overflow. Send a "Stop" signal to stop sending data when the receiving buffer is full. Send a "Start" signal to start sending data when the receiving buffer is empty. The options are **None** and Hardware RTS/CTS.

SOL VT-UTF8 Combo Key Support

Select Enabled to enable VT-UTF8 Combination Key support for ANSI/VT100 terminals. The options are Disabled and **Enabled.**

SOL Recorder Mode

Select Enabled to capture the data displayed on a terminal and send it as text messages to a remote server. The options are **Disabled** and Enabled.

SOL Resolution 100x31

Select Enabled for extended-terminal resolution support. The options are Disabled and **Enabled**.

SOL Putty KeyPad

This feature selects Function Keys and KeyPad settings for Putty, which is a terminal emulator designed for the Windows OS. The options are **VT100**, LINUX, XTERMR6, SCO, ESCN, and VT400.

Serial Port for Out-of-Band Management/Windows Emergency Management Services (EMS)

The submenu allows the user to configure Console Redirection settings to support Out-of-Band Serial Port management.

EMS (Emergency Management Services) Console Redirection

Select Enabled to use a COM port selected by the user for EMS Console Redirection. The options are **Disabled** and Enabled**.**

If the item above is set to Enabled, the following items will become available for configuration:

▶EMS Console Redirection Settings

This feature allows the user to specify how the host computer will exchange data with the client computer, which is the remote computer used by the user.

Out-of-Band Mgmt Port

The feature selects a serial port in a client server to be used by the Microsoft Windows Emergency Management Services (EMS) to communicate with a remote host server. The options are COM1 and **SOL**.

Terminal Type

Use this feature to select the target terminal emulation type for Console Redirection. Select VT100 to use the ASCII character set. Select VT100+ to add color and function key support. Select ANSI to use the extended ASCII character set. Select VT-UTF8 to use UTF8 encoding to map Unicode characters into one or more bytes. The options are VT100, VT100+, **VT-UTF8,** and ANSI.

Bits Per Second

This item sets the transmission speed for a serial port used in Console Redirection. Make sure that the same speed is used in the host computer and the client computer. A lower transmission speed may be required for long and busy lines. The options are 9600, 19200, 57600, and **115200** (bits per second).

Flow Control

Use this item to set the flow control for Console Redirection to prevent data loss caused by buffer overflow. Send a "Stop" signal to stop sending data when the receiving buffer is full. Send a "Start" signal to start sending data when the receiving buffer is empty. The options are **None,** Hardware RTS/CTS, and Software Xon/Xoff.

Data Bits

Use this feature to set the data transmission size for Console Redirection. The options are 7 (Bits) and **8 (Bits)**.

Parity

A parity bit can be sent along with regular data bits to detect data transmission errors. Select Even if the parity bit is set to 0, and the number of 1's in data bits is even. Select Odd if the parity bit is set to 0, and the number of 1's in data bits is odd. Select None if you do not want to send a parity bit with your data bits in transmission. Select Mark to add a mark as a parity bit to be sent along with the data bits. Select Space to add a Space as a parity bit to be sent with your data bits. The options are **None**, Even, Odd, Mark and Space.

Stop Bits

A stop bit indicates the end of a serial data packet. Select 1 Stop Bit for standard serial data communication. Select 2 Stop Bits if slower devices are used. The options are **1** and 2.

▶ACPI Settings

Use this feature to configure Advanced Configuration and Power Interface (ACPI) power management settings for your system.

ACPI Settings

WHEA Support

Select Enabled to support the Windows Hardware Error Architecture (WHEA) platform and provide a common infrastructure for the system to handle hardware errors within the Windows OS environment to reduce system crashes and to enhance system recovery and health monitoring. The options are Disabled and **Enabled**.

▶Trusted Computing (Available when a TPM device is installed and detected by the BIOS)

The features from here to Current Status Information are displayed if a TPM module is detected:

Security Device Support

If this feature and the TPM jumper on the motherboard are both set to Enabled, onboard security devices will be enabled for TPM support to enhance data integrity and network security. Please reboot the system for a change on this setting to take effect. The options are Disable and **Enable**.

TPM State

Select Enabled to use TPM (Trusted Platform Module) settings to enhance system data security. Please reboot your system for any change on the TPM state to take effect. The options are **Disable** and Enable**.**

Pending operation

Use this item to schedule a TPM-related operation to be performed by a security device for system data integrity. Your system will reboot to carry out a pending TPM operation. The options are **None** and TPM Clear.

Note: Your system will reboot to carry out a pending TPM operation.

Device Select

Use this feature to select the TPM version. TPM 1.2 will restrict support to TPM 1.2 devices. TPM 2.0 will restrict support for TPM 2.0 devices. Select Auto to enable support for both versions. The default setting is **Auto**.

Current Status Information

This item displays the status of the TPM support on this motherboard.

- TPM Enabled Status
- TPM Active Status
- TPM Owner Status

The features from here to Device Select on the next page are displayed if a TPM 2.0 module is detected:

TPM20 Device Found

Vendor: IFX

Firmware Version: 5.51

Configuration

Security Device Support

If this feature and the TPM jumper on the motherboard are both set to Enabled, onboard security devices will be enabled for TPM support to enhance data integrity and network security. Please reboot the system for a change on this setting to take effect. The options are Disable and **Enable**.

The following TPM information will be displayed:

- Active PCR banks
- Available PCR banks

If the feature "Security Device Support" is set to Enable, the following features will become available for configuration:

SHA-1 PCR Bank

Use this item to disable or enable the SHA-1 Platform Configuration Register (PCR) bank for the installed TPM device. The options are Disabled and **Enabled**.

SHA256 PCR Bank

Use this item to disable or enable the SHA256 Platform Configuration Register (PCR) bank for the installed TPM device. The options are Disabled and **Enabled**.

Pending operation

Use this item to schedule a TPM-related operation to be performed by a security device for system data integrity. Your system will reboot to carry out a pending TPM operation. The options are **None** and TPM Clear.

Platform Hierarchy

Use this item to disable or enable platform hierarchy for platform protection. The options are Disabled and **Enabled**.

Storage Hierarchy

Use this item to disable or enable storage hierarchy for cryptographic protection. The options are Disabled and **Enabled**.

Endorsement Hierarchy

Use this item to disable or enable endorsement hierarchy for privacy control. The options are Disabled and **Enabled**.

TPM2.0 UEFI Spec Version

Use this feature to specify the TPM UEFI spec version. TCG 1.2 has support for Windows® 2012, Windows 8, and Windows 10. TCG 2 has support for Windows 10 or later. The options are TCG_1_2 and **TCG_2**.

Physical Presence Spec Version

Use this feature to select the PPI spec version. The options are **1.2** and 1.3**.**

Device Select

Use this feature to select the TPM version. TPM 1.2 will restrict support to TPM 1.2 devices. TPM 2.0 will restrict support for TPM 2.0 devices. Select Auto to enable support for both versions. The default setting is **Auto**.

▶iSCSI Configuration

iSCSI Initiator Name

This feature allows the user to enter the unique name of the iSCSI Initiator in IQN format. Once the name of the iSCSI Initiator is entered into the system, configure the proper settings for the following items.

▶Add an Attempt

▶Delete Attempts

▶Change Attempt Order

▶Intel® Ethernet Connection X553 1GbE - 0C:C4:7A:XX:XX:XX
▶Intel® Ethernet Connection X553 1GbE - 0C:C4:7A:XX:XX:XX
▶Intel® Ethernet Connection X553 1GbE - 0C:C4:7A:XX:XX:XX
▶Intel® Ethernet Connection X553 1GbE - 0C:C4:7A:XX:XX:XX

These items display the following information :

▶NIC Configuration

Link Speed

Use this feature to change the link speed and duplex for the current port. The options are **Auto Negotiated**, 10Mbps Half, 10Mbps Full, 100Mbps Half, and 100Mbps full.

Wake On LAN

Select enabled to wake the system with a magic packet. The options are **Enabled** and Disabled.

Blink LEDs

This feature allows the user to specify the duration for LEDs to blink. The range is from 0 ~ 15 seconds. The default setting is **0**.

UEFI Driver

This item displays the UEFI driver version.

Adapter PBA

This item displays the Processor Bus Adapter (PBA) model number. The PBA number is a nine digit number (i.e., 010B00-000) located near the serial number.

Device Name

This item displays the adapter device name.

Chip Type

This item displays the network adapter chipset name.

PCI Device ID

This item displays the device ID number.

PCI Address

This item displays the PCI address for this computer. PCI addresses are three two-digit hexadecimal numbers.

Link Status

This item displays the connection status.

MAC Address

This item displays the MAC address for this computer. Mac addresses are six two-digit hexadecimal numbers.

Virtual MAC Address

This item displays the Virtual MAC address for this computer. Mac addresses are six two-digit hexadecimal numbers.

5.4 Event Logs

Use this feature to configure Event Log settings.

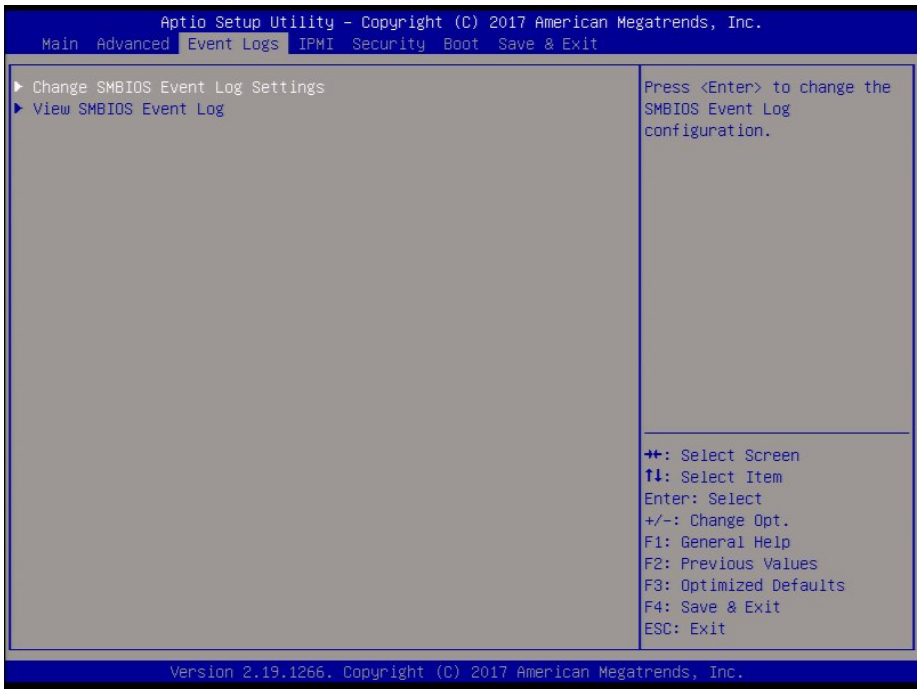

▶Change SMBIOS Event Log Settings

Enabling/Disabling Options

PCIe ELog Support

Use this feature to enable or disable PCIe error logging suport. The options are Disabled and **Enabled**.

Memory ELog Support

Use this feature to enable or disable memory error logging suport. The options are Disabled and **Enabled**.

SMBIOS Event Log

Change this item to enable or disable all features of the SMBIOS Event Logging during system boot. The options are **Enabled** and Disabled.

Erasing Settings

Erase Event Log

Select Enabled to erase all error events in the SMBIOS (System Management BIOS) log before an event logging is initialized at bootup. The options are **No,** Yes, Next reset, and Yes, Every reset.

When Log is Full

Select Erase Immediately to immediately erase all errors in the SMBIOS event log when the event log is full. Select Do Nothing for the system to do nothing when the SMBIOS event log is full. The options are **Do Nothing** and Erase Immediately.

SMBIOS Event Log Standard Settings

Log System Boot Event

Select Enabled to log system boot events. The options are Enabled and **Disabled**.

MECI (Multiple Event Count Increment)

Enter the increment value for the multiple event counter. Enter a number between 1 to 255. The default setting is **1**.

METW (Multiple Event Count Time Window)

This item is used to determine how long (in minutes) should the multiple event counter wait before generating a new event log. Enter a number between 0 to 99. The default setting is **60**.

Note: Please reboot the system for the changes to take effect.

▶View SMBIOS Event Log

This item allows the user to view the event in the SMBIOS event log. The following categories are displayed:

DATE/TIME/ERROR CODE/SEVERITY

5.5 IPMI

Use this feature to configure Intelligent Platform Management Interface (IPMI) settings.

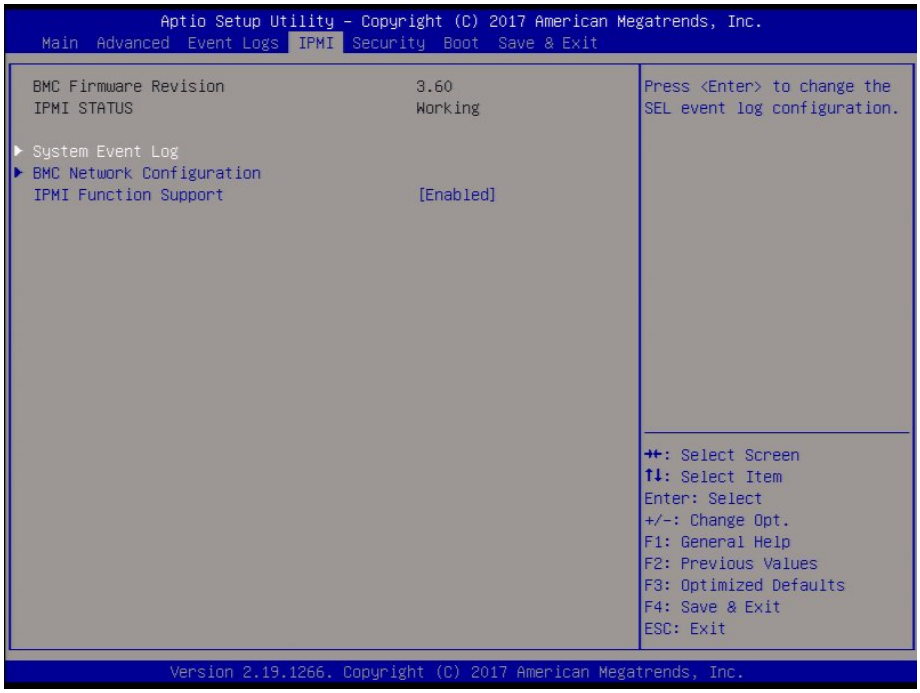

BMC Firmware Revision

This feature indicates the IPMI firmware revision used in your system.

IPMI Status

This feature indicates the status of the IPMI firmware installed in your system.

▶System Event Log

Enabling/Disabling Options

SEL Components

Select Enabled for all system event logging at bootup. The options are Disabled and **Enabled**.

Erasing Settings

Erase SEL

Select Yes, On next reset to erase all system event logs upon next system reboot. Select Yes, On every reset to erase all system event logs upon each system reboot. Select No to keep all system event logs after each system reboot. The options are **No,** Yes, On next reset, and Yes, On every reset.

When SEL is Full

This feature allows the user to determine what the BIOS should do when the system event log is full. Select Erase Immediately to erase all events in the log when the system event log is full. The options are **Do Nothing** and Erase Immediately.

Note: After making changes on a setting, be sure to reboot the system for the changes to take effect.

▶BMC Network Configuration

The following items will be displayed:

IPMI LAN Selection

This item displays the IPMI LAN setting. The default setting is **Failover**.

IPMI Network Link Status

This item displays the IPMI Network Link status. The default setting is **Dedicated LAN**.

Update IPMI LAN Configuration

Select Yes for the BIOS to implement all IP/MAC address changes at the next system boot. The options are **No** and Yes.

If the item above is set to Yes, "Configuration Address Source" and "VLAN" will become available for configuration:

Configuration Address Source

Use this item to select the source of the IP address for this computer. If Static is selected, you will need to know the IP address of this computer and enter it to the system manually in the field. If DHCP is selected, the BIOS will search for a DHCP (Dynamic Host Configuration Protocol) server in the network that is attached to and request the next available IP address for this computer. The options are **DHCP** and Static.

The following items are assigned IP addresses automatically if DHCP is selected, or they can be configured manually if Static is selected.

Station IP Address

This item displays the Station IP address for this computer. This should be in decimal and in dotted quad form (i.e., 192.168.10.253).

Subnet Mask

This item displays the sub-network that this computer belongs to. The value of each three-digit number separated by dots should not exceed 255.

Station MAC Address

This item displays the Station MAC address for this computer. Mac addresses are 6 two-digit hexadecimal numbers.

Gateway IP Address

This item displays the Gateway IP address for this computer. This should be in decimal and in dotted quad form (i.e., 192.168.10.253).

VLAN

This feature is configurable if the Update IPMI LAN Configuration feature is set to Yes. Use this feature to enable or disable the IPMI VLAN function. The options are **Disable** and Enable.

IPMI Function Support

Use this feature to enable IPMI support. The options are **Enabled** and Disabled. When disabled, the system powers on quicker by removing BIOS support for extended IPMI features. The Disable option is for applications that require faster power on time wthout using Supermicro Update Manager (SUM) or extended IPMI features. The BMC network configuration in the BIOS setup is also invalid when IPMI Function Support is disabled. The general BMC function and motherboard health monitor such as fan control are still functioning even when this option is disabled.

5.6 Security

This menu allows the user to configure the following security settings for the system.

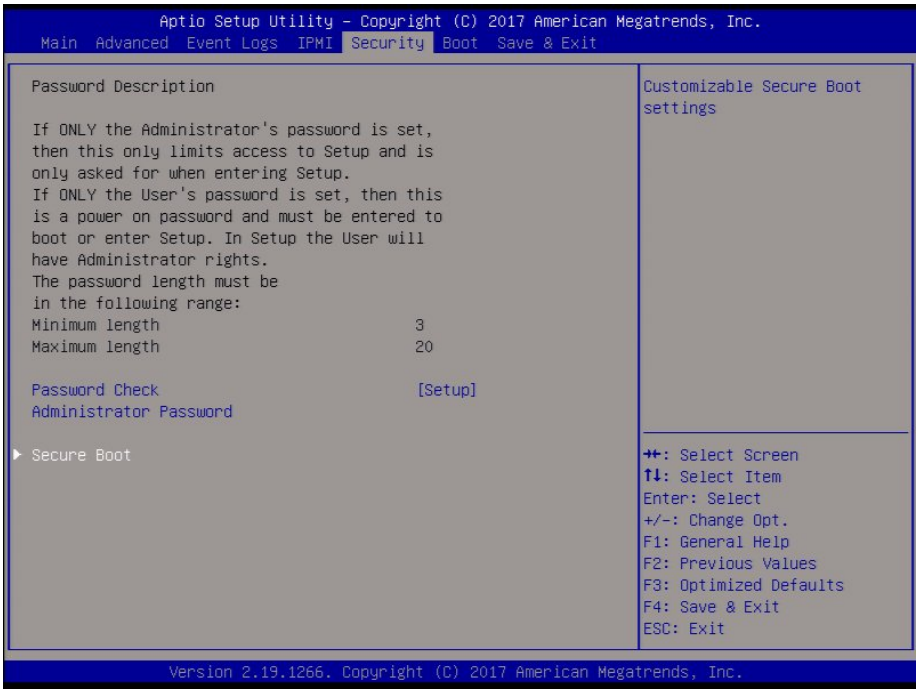

Password Check

Select Setup for the system to check for a password at Setup. Select Always for the system to check for a password at bootup or upon entering the BIOS Setup utility. The options are **Setup** and Always.

Administrator Password

Use this feature to set the administrator password which is required to enter the BIOS setup utility. The length of the password should be from 3 characters to 20 characters long.

The feature below is displayed if an Administrator Password is set:

User Password

Use this feature to set a user password.

▶Secure Boot

Platform Mode - Setup

Secure Boot - Not Active

Vendor Keys - Not Active

Enable Secure Boot

Select Enable for secure boot support to ensure system security at bootup. The options are **Disabled** and Enabled.

Secure Boot Mode

This feature allows the user to select the desired secure boot mode for the system. The options are Standard and **Custom**.

If Secure Boot Mode is set to Customized, Key Management features will be available for configuration:

▶CSM Support

This feature is for manufacturing debugging purposes.

▶Reset to Setup Mode

Select Yes to delete all Secure Boot key databases and force the system to Setup Mode. The options are Yes and No.

▶Restore Factory Keys

Select Yes to restore all factory keys to the default settings. The options are Yes and No.

▶Key Management

This submenu allows the user to configure the following Key Management settings.

Provision Factory Defaults

Select Enabled to install the default Secure Boot keys set by the manufacturer. The options are **Disabled** and Enabled.

Install Factory Default Keys

Select Yes to install the default settings for all keys. The options are Yes and No.

▶Enroll Efi Image

This feature allows the image to run in Secure Boot mode.

▶Save All Secure Boot Variables

This feature allows the user to decide if all secure boot variables should be saved.

▶Platform Key (PK)

This feature allows the user to configure the settings of the platform keys.

Set New

Select Yes to load the new platform keys (PK) from the manufacturer's defaults. Select No to load the platform keys from a file. The options are **Yes** and No.

▶Key Exchange Key (KEK)

Set New

Select Yes to load the KEK from the manufacturer's defaults. Select No to load the KEK from a file. The options are Yes and No.

Append

Select Yes to add the KEK from the manufacturer's defaults list to the existing KEK. Select No to load the KEK from a file. The options are Yes and No.

▶Authorized Signatures

Set New

Select Yes to load the database from the manufacturer's defaults. Select No to load the DB from a file. The options are Yes and No.

Append

Select Yes to add the database from the manufacturer's defaults to the existing DB. Select No to load the DB from a file. The options are Yes and No.

▶Forbidden Signatures

Set New

Select Yes to load the DBX from the manufacturer's defaults. Select No to load the DBX from a file. The options are Yes and No.

Append

Select Yes to add the DBX from the manufacturer's defaults to the existing DBX. Select No to load the DBX from a file. The options are Yes and No.

▶Authorized TimeStamps

Set New

Select Yes to load the DBT from the manufacturer's defaults. Select No to load the DBT from a file. The options are Yes and No.

Append

Select Yes to add the DBT from the manufacturer's defaults list to the existing DBT. Select No to load the DBT from a file. The options are Yes and No.

▶OsRecovery Signature

This item uploads and installs an OSRecovery Signature. You may insert a factory default key or load from a file. The file formats accepted are:

1) Public Key Certificate

a. EFI Signature List

b. EFI CERT X509 (DER Encoded)

c. EFI CERT RSA2048 (bin)

d. EFI SERT SHA256 (bin)

2) EFI Time Based Authenticated Variable

When prompted, select "Yes" to load Factory Defaults or "No' to load from a file.

5.7 Boot

Use this feature to configure Boot Settings:

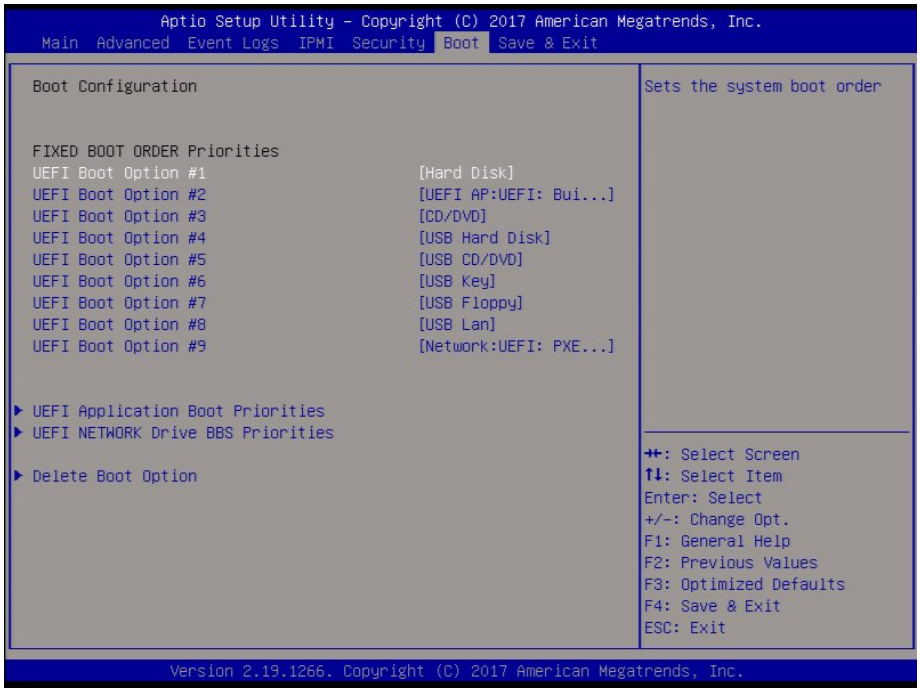

Fixed Boot Order Priorities

This option prioritizes the order of bootable devices that the system boots from. Press <Enter> on each entry from top to bottom to select devices.

- UEFI Boot Option #1
- UEFI Boot Option #2
- UEFI Boot Option #3
- UEFI Boot Option #4
- UEFI Boot Option #5
- UEFI Boot Option #6
- UEFI Boot Option #7
- UEFI Boot Option #8
- UEFI Boot Option #9

▶UEFI Application Boot Priorities

- Boot Option # - This feature sets the system boot order of detected devices. The options are **[the list of detected boot device(s)]** and Disabled.

▶UEFI USB Key Drive BBS Priorities

This feature is displayed when a storage media is detected.

▶UEFI Network Drive BBS Priorities

- Boot Option # - This feature sets the system boot order of detected devices. The options are **[the list of detected boot device(s)]** and Disabled.

▶Add New Boot Option

This feature is displayed when a storage media is detected.

▶Delete Boot Option

Use this item to select a boot device to delete from the boot priority list.

Delete Boot Option

Select the target boot device to delete.

5.8 Save & Exit

Select the Save & Exit tab from the BIOS setup screen to configure the settings below.

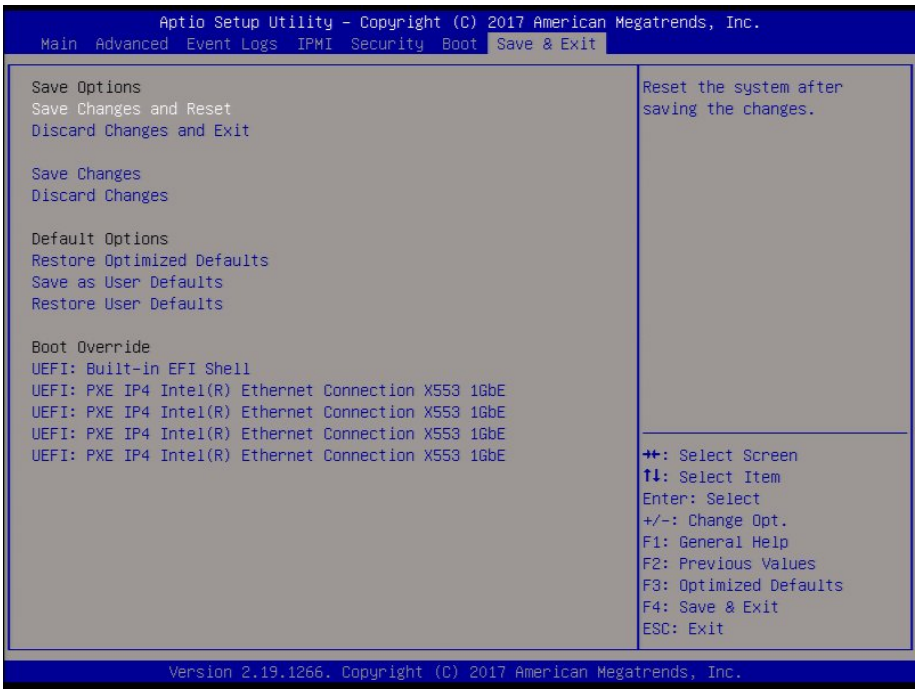

Save Options

Save Changes and Reset

When you have completed the system configuration changes, select this option to save all changes made and reset the system.

Discard Changes and Exit

Select this option to quit the BIOS Setup without making any permanent changes to the system configuration and reboot the computer. Select Discard Changes and Exit from the Exit menu and press <Enter>.

Save Changes

When you have completed the system configuration changes, select this option to save all changes made. This will not reset (reboot) the system.

Discard Changes

Select this option and press <Enter> to discard all the changes and return to the AMI BIOS Utility Program.

Default Options

Restore Optimized Defaults

To set this feature, select Restore Optimized Defaults and press <Enter>. These are factory settings designed for maximum system performance but not for maximum stability.

Save as User Defaults

To set this feature, select Save as User Defaults from the Exit menu and press <Enter>. This enables the user to save any changes to the BIOS setup for future use.

Restore User Defaults

To set this feature, select Restore User Defaults from the Exit menu and press <Enter>. Use this feature to retrieve user-defined settings that were saved previously.

Boot Override

This feature allows the user to override the Boot Option Priorities sequence in the Boot menu and immediately boot the system with another device specified by the user. This is a one-time override.

UEFI: Built-in EFI Shell

UEFI: PXE IP4 Intel® Ethernet Connection X553 1GbE

UEFI: PXE IP4 Intel® Ethernet Connection X553 1GbE

UEFI: PXE IP4 Intel® Ethernet Connection X553 1GbE

UEFI: PXE IP4 Intel® Ethernet Connection X553 1GbE

Appendix A

BIOS Codes

A.1 BIOS Error POST (Beep) Codes

During the POST (Power-On Self-Test) routines, which are performed each time the system is powered on, errors may occur.

Non-fatal errors are those which, in most cases, allow the system to continue the bootup process. Error messages normally appear on the screen.

Fatal errors are those which will not allow the system to continue the boot-up procedure. If a fatal error occurs, consult your system manufacturer for possible repairs.

Fatal errors are usually communicated through a series of audible beeps. The table shown below lists some common errors and their corresponding beep codes.

BIOS Beep (POST) Codes		
Beep Code	**Error Message**	**Description**
1 beep	Refresh	Circuits have been reset (Ready to power up)
5 short, 1 long	Memory error	No memory detected in system
5 long, 2 short	Display memory read/write error	Video adapter missing or with faulty memory
1 long continuous	System OH	System overheat condition

A.2 Additional BIOS POST Codes

The AMI BIOS supplies additional checkpoint codes, which are documented online at http://www.supermicro.com/support/manuals/ ("AMI BIOS POST Codes User's Guide").

When BIOS performs the Power On Self Test, it writes checkpoint codes to I/O port 0080h. If the computer cannot complete the boot process, a diagnostic card can be attached to the computer to read I/O port 0080h (Supermicro p/n AOC-LPC80-20).

For information on AMI updates, please refer to http://www.ami.com/products/.

Appendix B

Standardized Warning Statements for DC Systems

B.1 About Standardized Warning Statements

The following statements are industry standard warnings, provided to warn the user of situations which have the potential for bodily injury. Should you have questions or experience difficulty, contact Supermicro's Technical Support department for assistance. Only certified technicians should attempt to install or configure components.

Read this appendix in its entirety before installing or configuring components in the Supermicro chassis.

These warnings may also be found on our website at http://www.supermicro.com/about/policies/safety_information.cfm.

Warning Definition

Warning! This warning symbol means danger. You are in a situation that could cause bodily injury. Before you work on any equipment, be aware of the hazards involved with electrical circuitry and be familiar with standard practices for preventing accidents.

警告の定義

この警告サインは危険を意味します。

人身事故につながる可能性がありますので、いずれの機器でも動作させる前に、

電気回路に含まれる危険性に注意して、標準的な事故防止策に精通して下さい。

此警告符号代表危险。

您正处于可能受到严重伤害的工作环境中。在您使用设备开始工作之前，必须充分意识到触电的危险，并熟练掌握防止事故发生的标准工作程序。请根据每项警告结尾的声明号码找到此设备的安全性警告说明的翻译文本。

此警告符號代表危險。

您目前所處的工作環境可能讓您受傷。在您使用任何設備之前，請注意觸電的危險，並且要熟悉預防事故發生的標準工作程序。請依照每一注意事項後的號碼找到相關的翻譯說明內容。

Warnung

WICHTIGE SICHERHEITSHINWEISE

Dieses Warnsymbol bedeutet Gefahr. Sie befinden sich in einer Situation, die zu Verletzungen führen kann. Machen Sie sich vor der Arbeit mit Geräten mit den Gefahren elektrischer Schaltungen und den üblichen Verfahren zur Vorbeugung vor Unfällen vertraut. Suchen Sie mit der am Ende jeder Warnung angegebenen Anweisungsnummer nach der jeweiligen Übersetzung in den übersetzten Sicherheitshinweisen, die zusammen mit diesem Gerät ausgeliefert wurden.

BEWAHREN SIE DIESE HINWEISE GUT AUF.

INSTRUCCIONES IMPORTANTES DE SEGURIDAD

Este símbolo de aviso indica peligro. Existe riesgo para su integridad física. Antes de manipular cualquier equipo, considere los riesgos de la corriente eléctrica y familiarícese con los procedimientos estándar de prevención de accidentes. Al final de cada advertencia encontrará el número que le ayudará a encontrar el texto traducido en el apartado de traducciones que acompaña a este dispositivo.

GUARDE ESTAS INSTRUCCIONES.

IMPORTANTES INFORMATIONS DE SÉCURITÉ

Ce symbole d'avertissement indique un danger. Vous vous trouvez dans une situation pouvant entraîner des blessures ou des dommages corporels. Avant de travailler sur un équipement, soyez conscient des dangers liés aux circuits électriques et familiarisez-vous avec les procédures couramment utilisées pour éviter les accidents. Pour prendre connaissance des traductions des avertissements figurant dans les consignes de sécurité traduites qui accompagnent cet appareil, référez-vous au numéro de l'instruction situé à la fin de chaque avertissement.

CONSERVEZ CES INFORMATIONS.

תקנון הצהרות אזהרה

הצהרות הבאות הן אזהרות על פי תקני התעשייה, על מנת להזהיר את המשתמש מפני חבלה

פיזית אפשרית. במידה ויש שאלות או היתקלות בבעיה כלשהי, יש ליצור קשר עם מחלקת תמיכה

טכנית של סופרמיקרו. טכנאים מוסמכים בלבד רשאים להתקין או להגדיר את הרכיבים.

יש לקרוא את הנספח במלואו לפני התקנת או הגדרת הרכיבים במארזי סופרמיקרו.

ا كً ف حالة وٌكي أى تتسبب ف اصابة جسد ةٌ هذا الزهز عٌ خطز !تحذ زٌ .
قبل أى تعول على أي هعذات،كي على علن بالوخاطز ال أٌجوة عي الذوائز
الكهزبائ ةٍ
وكي على درا ةٌ بالووارسات البقائ ةٍ لو عٌ وقع أي حادث
استخذم رقن الب إِى الو صٌص ف هًا ةٌ كل تحذ زٌ للعثر تزجوتها

안전을 위한 주의사항

경고!

이 경고 기호는 위험이 있음을 알려 줍니다. 작업자의 신체에 부상을 야기 할 수 있는 상태에 있게 됩니다. 모든 장비에 대한 작업을 수행하기 전에 전기회로와 관련된 위험요소들을 확인하시고 사전에 사고를 방지할 수 있도록 표준 작업절차를 준수해 주시기 바랍니다.

해당 번역문을 찾기 위해 각 경고의 마지막 부분에 제공된 경고문 번호를 참조하십시오

BELANGRIJKE VEILIGHEIDSINSTRUCTIES

Dit waarschuwings symbool betekent gevaar. U verkeert in een situatie die lichamelijk letsel kan veroorzaken. Voordat u aan enige apparatuur gaat werken, dient u zich bewust te zijn van de bij een elektrische installatie betrokken risico's en dient u op de hoogte te zijn van de standaard procedures om ongelukken te voorkomen. Gebruik de nummers aan het eind van elke waarschuwing om deze te herleiden naar de desbetreffende locatie.

BEWAAR DEZE INSTRUCTIES

Installation Instructions

Warning! Read the installation instructions before connecting the system to the power source.

設置手順書

システムを電源に接続する前に、設置手順書をお読み下さい。

警告

将此系统连接电源前,请先阅读安装说明。

警告

將系統與電源連接前，請先閱讀安裝說明。

Warnung

Vor dem Anschließen des Systems an die Stromquelle die Installationsanweisungen lesen.

¡Advertencia!

Lea las instrucciones de instalación antes de conectar el sistema a la red de alimentación.

Attention

Avant de brancher le système sur la source d'alimentation, consulter les directives d'installation.

יש לקרוא את הוראות התקנה לפני חיבור המערכת למקור מתח.

اقر إرشادات التركيب قبل توصيل النظام إلى مصدر للطاقة

시스템을 전원에 연결하기 전에 설치 안내를 읽어주십시오.

Waarschuwing

Raadpleeg de installatie-instructies voordat u het systeem op de voedingsbron aansluit.

Circuit Breaker

Warning! This product relies on the building's installation for short-circuit (overcurrent) protection. Ensure that the protective device is rated not greater than: 60VDC, 20A.

サーキット・ブレーカー

この製品は、短絡（過電流）保護装置がある建物での設置を前提としています。

保護装置の定格が60VDC、20Aを超えないことを確認下さい。

警告

此产品的短路(过载电流)保护由建筑物的供电系统提供,确保短路保护设备的额定电流不大于60VDC,20A。

警告

此產品的短路(過載電流)保護由建築物的供電系統提供,確保短路保護設備的額定電流不大於60VDC,20A。

Warnung

Dieses Produkt ist darauf angewiesen, dass im Gebäude ein Kurzschluss- bzw. Überstromschutz installiert ist. Stellen Sie sicher, dass der Nennwert der Schutzvorrichtung nicht mehr als: 60VDC, 20A beträgt.

¡Advertencia!

Este equipo utiliza el sistema de protección contra cortocircuitos (o sobrecorrientes) del edificio. Asegúrese de que el dispositivo de protección no sea superior a: 60VDC, 20A.

Attention

Pour ce qui est de la protection contre les courts-circuits (surtension), ce produit dépend de l'installation électrique du local. Vérifiez que le courant nominal du dispositif de protection n'est pas supérieur à :60VDC, 20A.

מוצר זה מסתמך על הגנה המותקנת במבנים למניעת קצר חשמלי. יש לוודא כי
המכשיר המגן מפני הקצר החשמלי הוא לא יותר מ-60VDC, 20A

هذا المنتج يعتمد على معداث الحمايت مه الدوائرالقصيرة التي تم تثبيتها في
المبنى
تأكد من أن تقييم الجهاز الوقائي ليس أكثر من : 20A, 60VDC

경고!

이 제품은 전원의 단락(과전류)방지에 대해서 전적으로 건물의 관련 설비에 의존합니다.
보호장치의 정격이 반드시 60VDC(볼트), 20A(암페어)를 초과하지 않도록 해야 합니다.

Waarschuwing

Dit product is afhankelijk van de kortsluitbeveiliging (overspanning) van uw electrische installatie. Controleer of het beveiligde aparaat niet groter gedimensioneerd is dan 60VDC, 20A.

Power Disconnection Warning

Warning! The system must be disconnected from all sources of power and the power cord removed from the power supply module(s) before accessing the chassis interior to install or remove system components.

電源切断の警告

システムコンポーネントの取り付けまたは取り外しのために、シャーシー内部にアクセスするには、システムの電源はすべてのソースから切断され、電源コードは電源モジュールから取り外す必要があります。

警告

在你打开机箱并安装或移除内部器件前,必须将系统完全断电,并移除电源线。

警告

在您打開機殼安裝或移除內部元件前，必須將系統完全斷電，並移除電源線。

Warnung

Das System muss von allen Quellen der Energie und vom Netzanschlusskabel getrennt sein, das von den Spg.Versorgungsteilmodulen entfernt wird, bevor es auf den Chassisinnenraum zurückgreift, um Systemsbestandteile anzubringen oder zu entfernen.

¡Advertencia!

El sistema debe ser disconnected de todas las fuentes de energía y del cable eléctrico quitado de los módulos de fuente de alimentación antes de tener acceso el interior del chasis para instalar o para quitar componentes de sistema.

Attention

Le système doit être débranché de toutes les sources de puissance ainsi que de son cordon d'alimentation secteur avant d'accéder à l'intérieur du chassis pour installer ou enlever des composants de systéme.

אזהרה מפני ניתוק חשמלי

!אזהרה

יש לנתק את המערכת מכל מקורות החשמל ויש להסיר את כבל החשמלי מהספק לפני גישה לחלק הפנימי של המארז לצורך התקנת או הסרת רכיבים.

يجب فصم اننظاو من جميع مصادر انطاقت وإزانت سهك انكهرباء من وحدة امداد
انطاقت قبم
انصل إنى انمناطق انداخهيت نههيكم نتثبيج أو إزانت مكناث الجهاز

경고!

시스템에 부품들을 장착하거나 제거하기 위해서는 섀시 내부에 접근하기 전에 반드시 전원 공급장치로부터 연결되어있는 모든 전원과 전기코드를 분리해주어야 합니다.

Waarschuwing

Voordat u toegang neemt tot het binnenwerk van de behuizing voor het installeren of verwijderen van systeem onderdelen, dient u alle spanningsbronnen en alle stroomkabels aangesloten op de voeding(en) van de behuizing te verwijderen

Equipment Installation

Warning! Only trained and qualified personnel should be allowed to install, replace, or service this equipment.

機器の設置

トレーニングを受け認定された人だけがこの装置の設置、交換、またはサービスを許可されています。

警告

只有经过培训且具有资格的人员才能进行此设备的安装、更换和维修。

警告

只有經過受訓且具資格人員才可安裝、更換與維修此設備。

Warnung

Das Installieren, Ersetzen oder Bedienen dieser Ausrüstung sollte nur geschultem, qualifiziertem Personal gestattet werden.

¡Advertencia!

Solamente el personal calificado debe instalar, reemplazar o utilizar este equipo.

Attention

Il est vivement recommandé de confier l'installation, le remplacement et la maintenance de ces équipements à des personnels qualifiés et expérimentés.

אזהרה!

צוות מוסמך בלבד רשאי להתקין, להחליף את הציוד או לתת שירות עבור הציוד.

والمدربيه لتزكيب واستبدال أو خدمة هذا الجهاس يجب أن يسمح فقط للمنظفيه المؤهليه

경고!

훈련을 받고 공인된 기술자만이 이 장비의 설치, 교체 또는 서비스를 수행할 수 있습니다.

Waarschuwing

Deze apparatuur mag alleen worden geïnstalleerd, vervangen of hersteld door geschoold en gekwalificeerd personeel.

Restricted Area

Warning! This unit is intended for installation in restricted access areas. A restricted access area can be accessed only through the use of a special tool, lock and key, or other means of security. (This warning does not apply to workstations).

アクセス制限区域

このユニットは、アクセス制限区域に設置されることを想定しています。

アクセス制限区域は、特別なツール、鍵と錠前、その他のセキュリティの手段を用いてのみ出入りが可能です。

警告

此部件应安装在限制进出的场所，限制进出的场所指只能通过使用特殊工具、锁和钥匙或其它安全手段进出的场所。

警告

此裝置僅限安裝於進出管制區域，進出管制區域係指僅能以特殊工具、鎖頭及鑰匙或其他安全方式才能進入的區域。

Warnung

Diese Einheit ist zur Installation in Bereichen mit beschränktem Zutritt vorgesehen. Der Zutritt zu derartigen Bereichen ist nur mit einem Spezialwerkzeug, Schloss und Schlüssel oder einer sonstigen Sicherheitsvorkehrung möglich.

¡Advertencia!

Esta unidad ha sido diseñada para instalación en áreas de acceso restringido. Sólo puede obtenerse acceso a una de estas áreas mediante la utilización de una herramienta especial, cerradura con llave u otro medio de seguridad.

Attention

Cet appareil doit être installée dans des zones d'accès réservés. L'accès à une zone d'accès réservé n'est possible qu'en utilisant un outil spécial, un mécanisme de verrouillage et une clé, ou tout autre moyen de sécurité.

אזור עם גישה מוגבלת

אזהרה!

יש להתקין את היחידה באזורים שיש בהם הגבלת גישה. הגישה ניתנת בעזרת כלי אבטחה בלבד)מפתח, מנעול וכד.)'

تخصيص هذه انحذة نترك بُها ف مناطق محظورة تم .

،مَكن انصل إن منطقت محظورة فقط من خلال استخذاو أداة خاصت

أو أ وس هُت أخري نلالأمما قفم ومفتاح

경고!

이 장치는 접근이 제한된 구역에 설치하도록 되어있습니다. 특수도구, 잠금 장치 및 키, 또는 기타 보안 수단을 통해서만 접근 제한 구역에 들어갈 수 있습니다.

Waarschuwing

Dit apparaat is bedoeld voor installatie in gebieden met een beperkte toegang. Toegang tot dergelijke gebieden kunnen alleen verkregen worden door gebruik te maken van speciaal gereedschap, slot en sleutel of andere veiligheidsmaatregelen.

Battery Handling

Warning! There is the danger of explosion if the battery is replaced incorrectly. Replace the battery only with the same or equivalent type recommended by the manufacturer. Dispose of used batteries according to the manufacturer's instructions

電池の取り扱い

電池交換が正しく行われなかった場合、破裂の危険性があります。交換する電池はメーカーが推奨する型、または同等のものを使用下さい。使用済電池は製造元の指示に従って処分して下さい。

警告

电池更换不当会有爆炸危险。请只使用同类电池或制造商推荐的功能相当的电池更换原有电池。请按制造商的说明处理废旧电池。

警告

電池更換不當會有爆炸危險。請使用製造商建議之相同或功能相當的電池更換原有電池。請按照製造商的說明指示處理廢棄舊電池。

Warnung

Bei Einsetzen einer falschen Batterie besteht Explosionsgefahr. Ersetzen Sie die Batterie nur durch den gleichen oder vom Hersteller empfohlenen Batterietyp. Entsorgen Sie die benutzten Batterien nach den Anweisungen des Herstellers.

Attention

Danger d'explosion si la pile n'est pas remplacée correctement. Ne la remplacer que par une pile de type semblable ou équivalent, recommandée par le fabricant. Jeter les piles usagées conformément aux instructions du fabricant.

¡Advertencia!

Existe peligro de explosión si la batería se reemplaza de manera incorrecta. Reemplazar la batería exclusivamente con el mismo tipo o el equivalente recomendado por el fabricante. Desechar las baterías gastadas según las instrucciones del fabricante.

אזהרה!

קיימת סכנת פיצוץ של הסוללה במידה והוחלפה בדרך לא תקינה. יש להחליף
את הסוללה בסוג התואם מחברת יצרן מומלצת.
סילוק הסוללות המשומשות יש לבצע לפי הוראות היצרן.

هناك خطر من انفجار في حالة اسحبذال البطارية بطريقة غير صحيحة فعليل
اسحبذال البطارية
فقط بنفس النع أو ما يعادلها مما أوصث به الشرمة المصنعة
جخلص من البطاريات المسحعملة وفقا لحعليمات الشرمة الصانعة

경고!

배터리가 올바르게 교체되지 않으면 폭발의 위험이 있습니다. 기존 배터리와 동일하거나 제조사에서 권장하는 동등한 종류의 배터리로만 교체해야 합니다. 제조사의 안내에 따라 사용된 배터리를 처리하여 주십시오.

Waarschuwing

Er is ontploffingsgevaar indien de batterij verkeerd vervangen wordt. Vervang de batterij slechts met hetzelfde of een equivalent type die door de fabrikant aanbevolen wordt. Gebruikte batterijen dienen overeenkomstig fabrieksvoorschriften afgevoerd te worden.

Redundant Power Supplies

Warning! This unit might have more than one power supply connection. All connections must be removed to de-energize the unit.

冗長電源装置

このユニットは複数の電源装置が接続されている場合があります。

ユニットの電源を切るためには、すべての接続を取り外さなければなりません。

警告
此部件连接的电源可能不止一个，必须将所有电源断开才能停止给该部件供电。

警告
此裝置連接的電源可能不只一個，必須切斷所有電源才能停止對該裝置的供電。

Warnung

Dieses Gerät kann mehr als eine Stromzufuhr haben. Um sicherzustellen, dass der Einheit kein trom zugeführt wird, müssen alle Verbindungen entfernt werden.

¡Advertencia!

Puede que esta unidad tenga más de una conexión para fuentes de alimentación. Para cortar por completo el suministro de energía, deben desconectarse todas las conexiones.

Attention

Cette unité peut avoir plus d'une connexion d'alimentation. Pour supprimer toute tension et tout courant électrique de l'unité, toutes les connexions d'alimentation doivent être débranchées.

אם קיים יותר מספק אחד
אזהרה!
ליחדה יש יותר מחיבור אחד של ספק. יש להסיר את כל החיבורים על מנת לרוקן
את היחידה.

قد يكون لهذا الجهاز عدة اتصالات بوحدات امداد الطاقة .
يجب إزالة كافة الاتصالات لعسل الوحدة عن الكهرباء

경고!

이 장치에는 한 개 이상의 전원 공급 단자가 연결되어 있을 수 있습니다. 이 장치에 전원을 차단하기 위해서는 모든 연결 단자를 제거해야만 합니다.

Waarschuwing

Deze eenheid kan meer dan één stroomtoevoeraansluiting bevatten. Alle aansluitingen dienen verwijderd te worden om het apparaat stroomloos te maken.

Backplane Voltage

Warning! Hazardous voltage or energy is present on the backplane when the system is operating. Use caution when servicing.

バックプレーンの電圧

システムの稼働中は危険な電圧または電力が、バックプレーン上にかかっています。

修理する際には注意ください。

警告
当系统正在进行时，背板上有很危险的电压或能量，进行维修时务必小心。

警告
當系統正在進行時，背板上有危險的電壓或能量，進行維修時務必小心。

Warnung

Wenn das System in Betrieb ist, treten auf der Rückwandplatine gefährliche Spannungen oder Energien auf. Vorsicht bei der Wartung.

¡Advertencia!

Cuando el sistema está en funcionamiento, el voltaje del plano trasero es peligroso. Tenga cuidado cuando lo revise.

Attention

Lorsque le système est en fonctionnement, des tensions électriques circulent sur le fond de panier. Prendre des précautions lors de la maintenance.

מתח בפנל האחורי
אזהרה!
קיימת סכנת מתח בפנל האחורי בזמן תפעול המערכת. יש להיזהר במהלך העבודה.

هناك خطز مه التيار الكهزبائي أوالطاقة المجبدة على اللحة
عندما يكن النظام يعمل كه حذرا عند خدمة هذا الجهاس

경고!
시스템이 동작 중일 때 후면판 (Backplane)에는 위험한 전압이나 에너지가 발생 합니다.
서비스 작업 시 주의하십시오.

Waarschuwing
Een gevaarlijke spanning of energie is aanwezig op de backplane wanneer het systeem in gebruik is. Voorzichtigheid is geboden tijdens het onderhoud.

Comply with Local and National Electrical Codes

Warning! Installation of the equipment must comply with local and national electrical codes.

地方および国の電気規格に準拠

機器の取り付けはその地方および国の電気規格に準拠する必要があります。

警告
设备安装必须符合本地与本国电气法规。

警告
設備安裝必須符合本地與本國電氣法規。

Warnung
Die Installation der Geräte muss den Sicherheitsstandards entsprechen.

¡Advertencia!
La instalacion del equipo debe cumplir con las normas de electricidad locales y nacionales.

Attention
L'équipement doit être installé conformément aux normes électriques nationales et locales.

תיאום חוקי החשמל הארצי
אזהרה!
התקנת הציוד חייבת להיות תואמת לחוקי החשמל המקומיים והארציים.

تركيب المعدات الكهربائية يجب أن يمتثل للقاويه المحلية والبطية المتعلقة
بالكهرباء

경고!
현 지역 및 국가의 전기 규정에 따라 장비를 설치해야 합니다.

Waarschuwing
Bij installatie van de apparatuur moet worden voldaan aan de lokale en nationale elektriciteitsvoorschriften.

Product Disposal

Warning! Ultimate disposal of this product should be handled according to all national laws and regulations.

製品の廃棄

この製品を廃棄処分する場合、国の関係する全ての法律・条例に従い処理する必要があります。

警告
本产品的废弃处理应根据所有国家的法律和规章进行。

警告
本產品的廢棄處理應根據所有國家的法律和規章進行。

Warnung
Die Entsorgung dieses Produkts sollte gemäß allen Bestimmungen und Gesetzen des Landes erfolgen.

¡Advertencia!
Al deshacerse por completo de este producto debe seguir todas las leyes y reglamentos nacionales.

Attention

La mise au rebut ou le recyclage de ce produit sont généralement soumis à des lois et/ou directives de respect de l'environnement. Renseignez-vous auprès de l'organisme compétent.

סילוק המוצר

אזהרה!

סילוק סופי של מוצר זה חייב להיות בהתאם להנחיות וחוקי המדינה.

التخلص النهائي من هذا المنتج ينبغي التعامل معه وفقا لجميع القانين واللائح البطنية عند

경고!

이 제품은 해당 국가의 관련 법규 및 규정에 따라 폐기되어야 합니다.

Waarschuwing

De uiteindelijke verwijdering van dit product dient te geschieden in overeenstemming met alle nationale wetten en reglementen.

Hot Swap Fan Warning

Warning! Hazardous moving parts. Keep away from moving fan blades. The fans might still be turning when you remove the fan assembly from the chassis. Keep fingers, screwdrivers, and other objects away from the openings in the fan assembly's housing.

ファン・ホットスワップの警告

警告！回転部品に注意。運転中は回転部(羽根)に触れないでください。シャーシから冷却ファン装置を取り外した際、ファンがまだ回転している可能性があります。ファンの開口部に、指、ドライバー、およびその他のものを近づけないで下さい。

警告!

警告！危险的可移动性零件。请务必与转动的风扇叶片保持距离。 当您从机架移除风扇装置，风扇可能仍在转动。小心不要将手指、螺丝起子和其他物品太靠近风扇

警告

危險的可移動性零件。請務必與轉動的風扇葉片保持距離。 當您從機架移除風扇裝置，風扇可能仍在轉動。小心不要將手指、螺絲起子和其他物品太靠近風扇。

Warnung

Gefährlich Bewegende Teile. Von den bewegenden Lüfterblätter fern halten. Die Lüfter drehen sich u. U. noch, wenn die Lüfterbaugruppe aus dem Chassis genommen wird. Halten Sie Finger, Schraubendreher und andere Gegenstände von den Öffnungen des Lüftergehäuses entfernt.

¡Advertencia!

Riesgo de piezas móviles. Mantener alejado de las aspas del ventilador. Los ventiladores podran dar vuelta cuando usted quite ell montaje del ventilador del chasis. Mandtenga los dedos, los destornilladores y todos los objetos lejos de las aberturas del ventilador

Attention

Pieces mobiles dangereuses. Se tenir a l'ecart des lames du ventilateur Il est possible que les ventilateurs soient toujours en rotation lorsque vous retirerez le bloc ventilateur du châssis. Prenez garde à ce que doigts, tournevis et autres objets soient éloignés du logement du bloc ventilateur.

אזהרה!

חלקים נעים מסוכנים. התרחק מלהבי המאוורר בפעולהכאשר מסירים את חלקי המאוורר מהמארז, יתכן והמאוורר עדיין עובדים. יש להרחיק למרחק בטוח את האצבעות וכלי עבודה שונים מהפתחים בתוך המאוורר

تحذير! أجزاء متحركة خطرة. ابتعد عن شفرات المروحة المتحركة.من الممكن أن
المراوح لا تزال تدورعند إزالة كتلة المروحة من الهيكل يجب إبقاء الأصابع
.ومفكات البراغي وغيرها من الأشياء بعيدا عن الفتحات في كتلة المروحة

경고!

움직이는 위험한 부품. 회전하는 송풍 날개에 접근하지 마세요. 섀시로부터 팬 조립품을 제거할 때 팬은 여전히 회전하고 있을 수 있습니다. 팬 조림품 외관의 열려있는 부분들로부터 손가락 및 스크류드라이버, 다른 물체들이 가까이 하지 않도록 배치해 주십시오.

Waarschuwing

Gevaarlijk bewegende onderdelen. Houd voldoende afstand tot de bewegende ventilatorbladen. Het is mogelijk dat de ventilator nog draait tijdens het verwijderen van het ventilatorsamenstel uit het chassis. Houd uw vingers, schroevendraaiers en eventuele andere voorwerpen uit de buurt van de openingen in de ventilatorbehuizing.

DC Power Supply

Warning! When stranded wiring is required, use approved wiring terminations, such as closedloop or spade-type with upturned lugs. These terminations should be the appropriate size for the wires and should clamp both the insulation and conductor.

警告

より線が必要な場合、承認済みのケーブル終端（上向きの端子を備えたクローズループ型またはU字型の終端など）を使用してください。使用するワイヤーに適したサイズで、絶縁体および導体が両方ともクランプされている終端でなければなりません。

警告

需要多股佈線時，請使用經核准的佈線終端，例如閉環或鏟型接線片。 這些終端的大小應適合線路，並且可以同時夾住絕緣體和導體。

警告

需要使用绞线连接时，请使用经认可的连接端子，如闭环端子或具有接线柱的铲形端子。这些端子的大小应与线缆相吻合，并且可以将绝缘部分和导体夹紧固定。

Warnung

Wenn Litzenverdrahtung erforderlich ist, sind zugelassene Verdrahtungsabschlüsse, z.B. für einen geschlossenen Regelkreis oder gabelförmig, mit nach oben gerichteten Kabelschuhen zu verwenden. Diese Abschlüsse sollten die angemessene Größe für die Drähte haben und sowohl die Isolierung als auch den Leiter festklemmen.

¡Advertencia!

Cuando se necesite hilo trenzado, utilizar terminales para cables homologados, tales como las de tipo "bucle cerrado" o "espada", con las lengüetas de conexión vueltas hacia arriba. Estos terminales deberán ser del tamaño apropiado para los cables que se utilicen, y tendrán que sujetar tanto el aislante como el conductor.

Attention

Quand des fils torsadés sont nécessaires, utiliser des douilles terminales homologuées telles que celles à circuit fermé ou du type à plage ouverte avec cosses rebroussées. Ces douilles terminales doivent être de la taille qui convient aux fils et doivent être refermées sur la gaine isolante et sur le conducteur.

תקנון הצהרות אזהרה

הצהרות הבאות הן אזהרות על פי תקני התעשייה, על מנת להזהיר את המשתמש מפני חבלה פיזית אפשרית. במידה ויש שאלות או היתקלות בבעיה כלשהי, יש ליצור קשר עם מחלקת תמיכה טכנית של סופרמיקרו. טכנאים מוסמכים בלבד רשאים להתקין או להגדיר את הרכיבים.

יש לקרוא את הנספח במלואו לפני התקנת או הגדרת הרכיבים במארזי סופרמיקרו.

تحذير

أو عندما يكون مطلوبا الأسلاك الذين تقطعت بهم السبل، واستخدام الأسلاك إنهاء الموافقة عليها، مثل حلقة مغلقة ويجب الأشياء بأسمائها الحقيقية النوع مع العروات مقلوبة. وينبغي لهذه الإنهاءات يكون الحجم المناسب للأسلاك وموصل. كبح كل من العزل

주의!

꼬인 배선이 요구 될 때에는 폐회로나 돌출부가 위로 튀어 나온 Spade형태의 승인된 배선 터미네이션들을 사용하세요.

이 터미네이션들은 배선들을 위해 적절한 크기여야 하고, 절연체와 도체 모두를 고정시킬 수 있어야 합니다.

Waarschuwing

Wanneer geslagen bedrading vereist is, dient u bedrading te gebruiken die voorzien is van goedgekeurde aansluitingspunten, zoals het gesloten-lus type of het grijperschop type waarbij de aansluitpunten omhoog wijzen. Deze aansluitpunten dienen de juiste maat voor de draden te hebben en dienen zowel de isolatie als de geleider vast te klemmen.

DC Power Disconnection

Warning! Before performing any of the following procedures, ensure that power is removed from the DC circuit.

警告

次の手順を開始する前に、DC回路から電源が切断されていることを確認してください。

警告

進行以下任一操作程序前，請確保直流電路已斷電。

警告

请在进行以下任一操作程序前，确保直流电路的电源已经断开。

Warnung

Vor Ausführung der folgenden Vorgänge ist sicherzustellen, daß die Gleichstromschaltung keinen Strom erhält.

¡Advertencia!

Antes de proceder con los siguientes pasos, comprobar que la alimentación del circuito de corriente continua (CC) esté cortada (OFF).

Attention

Avant de pratiquer l'une quelconque des procédures ci-dessous, vérifier que le circuit en courant continu n'est plus sous tension.

אזהרה !

לפני ביצוע אחת הפעולות הבאת, ודא כי אספקת החשמל למעגל הזרם הישר DC הינה מנותקת.

تحذير

عندما يكون مطلوبا الأسلاك الذين تقطعت بهم السبل، واستخدام الأسلاك إنهاء الموافقة عليها، مثل حلقة مغلقة أو الأشياء بأسمائها الحقيقية النوع مع العروات مقلوبة. وينبغي لهذه الإنهاءات يكون الحجم المناسب للأسلاك ويجب كبح كل من العزل وموصل.

주의!

다음 절차들을 수행하기 전에, 전원이 DC회로로부터 제거되었는지를 확인해 주십시오.

Waarshuwing

Wanneer geslagen bedrading vereist is, dient u bedrading te gebruiken die voorzien is van goedgekeurde aansluitingspunten, zoals het gesloten-lus type of het grijperschop type waarbij de aansluitpunten omhoog wijzen. Deze aansluitpunten dienen de juiste maat voor de draden te hebben en dienen zowel de isolatie als de geleider vast te klemmen.

Hazardous Voltage or Energy Present on DC Power Terminals

Warning! Hazardous voltage or energy may be present on DC power terminals. Always replace cover when terminals are not in service. Be sure uninsulated conductors are not accessible when cover is in place.

警告

直接電力端子に危険な電圧やエネルギーが発生している可能性があります。使用していない端子には常にカバーをつけてください。カバーがついているときは非絶縁形コンダクターに接触していないことを確認してください。

警告

直流電源終端可能產生危險的電壓或能量。終端不使用時，請務必蓋上機蓋。當蓋上機蓋，確認不絕緣導體無法使用。

警告

直流电源终端可能会产生危险的电压或能量。终端不使用时，请务必盖上机盖。机盖盖上后，请确保导体未绝缘部分无法使用。

Warnung

In mit Gleichstrom betriebenen Terminals kann es zu gefährlicher Spannung kommen. Die Terminals müssen abgedeckt werden, wenn sie nicht in Betrieb sind. Stellen Sie bei Benutzung der Abdeckung sicher, dass alle nicht isolierten, stromführenden Kabel abgedeckt sind.

¡Advertencia!

Puede haber energía o voltaje peligrosos en los terminales eléctricos de CC. Reemplace siempre la cubierta cuando no estén utilizándose los terminales. Asegúrese de que no haya acceso a conductores descubiertos cuando la cubierta esté colocada.

Attention

Le voltage ou l'énergie électrique des terminaux à courant continu peuvent être dangereux. Veillez à toujours replacer le couvercle lors les terminaux ne sont pas en service. Assurez-vous que les conducteurs non isolés ne sont pas accessibles lorsque le couvercle est en place.

אזהרה !

מקור מתח מסוכן עלול להיות נוכח על הקטבים של זרם ה-DC. החלף תמיד
את המכסה כאשר הקטבים לא בשימוש. ודא כי המוליכים הלא מבודדים
אינם נגישים כאשר המכסה נמצא במקומו.

تحذير

قد الجهد الخطرة أو الطاقة تكون موجودة على محطات الطاقة العاصمة. استبدال غطاء دائما عندما المحطات ليست في الخدمة. مما الشك فيه الموصلات غير معزول لا يمكن الوصول إليها عندما الغطاء في مكانه.

주의!

DC전원 단자들에 위험한 전압이나 에너지가 발생할 수 있습니다.

단말기들을 운영하지 않을 때에는 덮개로 다시 덮어 놓아 주십시오. 덮개가 제자리에 있어야만 절연되지 않은 도체들의 접근을 막을 수 있습니다.

Waarshuwing

Op DC-aansluitingspunten kunnen zich gevaarlijke voltages of energieën voordoen. Plaats altijd de afsluiting wanneer de aansluitingspunten niet worden gebruikt Zorg ervoor dat blootliggende contactpunten niet toegankelijk zijn wanneer de afsluiting is geplaatst.

Appendix C

System Specifications

Processors
Single Intel Atom processor C3558/C3758
Chipset
SoC (System on a Chip)
BIOS
AMI® UEFI BIOS
Memory
Supports up to 256GB of ECC RDIMM or 64GB of ECC/non-ECC UDIMM DDR4 memory in four DIMM slots **Note:** See the memory section in Chapter 3 for details and our website for updates to supported memory.
SATA Controller
SoC controller for four SATA3 (6Gbps) ports
Drive Bays
Double fixed 2.5" hard drive bay with bracket (when AOC area is unoccupied)
Expansion Slots
One PCI Express 3.0 x4 slot One M.2 PCI Express 3.0 x2 slot
Motherboard
A2SDi-4C-HLN4F/A2SDi-8C-HLN4F; Mini-ITX form factor (6.7 x 6.7 in. / 170 x 170 mm.)
Chassis
SCE300; Mini ITX, Width 10" (254mm), Height 1.7" (43mm), Depth 8.9" (226mm)
System Cooling
Two to three 4-cm high performance PWM fans
Power Supply
84 W DC Power Adapter 12 Vdc, 5A (60W) DC Power Adapter; 12 Vdc, 7A (84W) DC Power Adapter
Weight
Gross Weight: 7.5 lbs (3.4 kg) Net Weight: 3.45 lbs (1.56 kg)
Operating Environment
Operating Temperature: 0°C to 40°C (32°F to 104°F) Non-operating Temperature: -40°C to 70°C (-40°F to 158°F) Operating Relative Humidity: 8% to 90% (non-condensing) Non-operating Relative Humidity: 5% to 95% (non-condensing)

Regulatory Compliance

Electromagnetic Emissions: FCC Class A, EN 55032 Class A, EN 61000-3-2/3-3, CISPR 32 Class A
Electromagnetic Immunity: EN 55024/CISPR 24, (EN 61000-4-2, EN 61000-4-3, EN 61000-4-4, EN 61000-4-5, EN 61000-4-6, EN 61000-4-8, EN 61000-4-11)
Safety: CSA/EN/IEC/UL 60950-1 Compliant, UL or CSA Listed (USA and Canada), CE Marking (Europe)
Other: VCCI-CISPR 32 and AS/NZS CISPR 32
Environmental: Directive 2011/65/EU and Directive 2012/19/EU

Perchlorate Warning

California Best Management Practices Regulations for Perchlorate Materials: This Perchlorate warning applies only to products containing CR (Manganese Dioxide) Lithium coin cells. “Perchlorate Material-special handling may apply. See www.dtsc.ca.gov/hazardouswaste/perchlorate”