

Maintenance and Service Guide

HP Z8 G4 Workstation

© Copyright 2017 HP Development Company, L.P.

Product notice

AMD is a trademark of Advanced Micro Devices, Inc. Bluetooth is a trademark owned by its proprietor and used by HP Inc. under license. Intel, Core, and Celeron are trademarks of Intel Corporation in the U.S. and other countries. Microsoft and Windows are either registered trademarks or trademarks of Microsoft Corporation in the United States and/or other countries. SD Logo is a trademark of its proprietor.

This guide describes features that are common to most models. Some features may not be available on your computer.

Not all features are available in all editions of Windows 10. This computer may require upgraded and/or separately purchased hardware, drivers and/or software to take full advantage of Windows 10 functionality. See http://www.microsoft.com for details.

The only warranties for HP products and services are set forth in the express warranty statements accompanying such products and services. Nothing herein should be construed as constituting an additional warranty. HP shall not be liable for technical or editorial errors or omissions contained herein.

The information contained herein is subject to change without notice. The only warranties for HP products and services are set forth in the express warranty statements accompanying such products and services. Nothing herein should be construed as constituting an additional warranty. HP shall not be liable for technical or editorial errors or omissions contained herein.

Second Edition: November 2017

First Edition: October 2017

Document Part Number: 932087-002

Software terms

By installing, copying, downloading, or otherwise using any software product preinstalled on this computer, you agree to be bound by the terms of the HP End User License Agreement (EULA). If you do not accept these license terms, your sole remedy is to return the entire unused product (hardware and software) within 14 days for a full refund subject to the refund policy of your seller.

About This Book

WARNING! Text set off in this manner indicates that failure to follow directions could result in bodily harm or loss of life.

CAUTION: Text set off in this manner indicates that failure to follow directions could result in damage to equipment or loss of information.

NOTE: Text set off in this manner provides important supplemental information.

Table of contents

1 Product features 1
Standard configuration features 1
Front panel components 2
Left-side components 4
Rear panel components 5

2 Illustrated parts catalog 6
Serial number location 6
Computer major components 6

3 Routine care, SATA drive guidelines, and disassembly preparation 10
Electrostatic discharge information 10
Generating static 10
Preventing electrostatic damage to equipment 11
Personal grounding methods and equipment 11
Grounding the work area 11
Recommended materials and equipment 12
Operating guidelines 12
Routine care 13
General cleaning safety precautions 13
Cleaning the computer case 13
Cleaning the keyboard 13
Cleaning the monitor 14
Service considerations 14
Tools and software requirements 14
Screws 14
Cables and connectors 15
Hard Drives 15
Lithium coin cell battery 15
SATA hard drives 16
SMART ATA drives 16

4 Removal and replacement procedures 17
Preparation for disassembly 17
Top cover 18
Front bezel 19

Right panel 20
Power supply 21
Access panel 22
Storage device 23
Interior covers 24
Rear fan 25
Optical drive 26
Internal PCIe bracket 27
Memory fan 28
I/O assembly 29
Front card guide and fans 31
System board 32
Heat sink 34
Processor 35

5 Computer Setup (F10) Utility 37
Computer Setup (F10) Utilities 37
Using Computer Setup (F10) Utilities 38
Computer Setup–Main 39
Computer Setup—Security 41
Computer Setup—Advanced 43
Recovering the Configuration Settings 47

6 Troubleshooting without diagnostics 48
Safety and comfort 48
Before you call for technical support 48
Helpful hints 49
Solving general problems 50
Solving power problems 53
Solving hard drive problems 53
Solving media card reader problems 55
Solving display problems 57
Solving audio problems 60
Solving printer problems 62
Solving keyboard and mouse problems 64
Solving hardware installation problems 65
Solving network problems 66
Solving memory problems 68
Solving USB flash drive problems 70
Solving front panel component problems 70
Solving Internet access problems 71

Solving software problems 72

7 POST error messages and diagnostic front panel LEDs and audible codes 73
POST numeric codes and text messages 73
Interpreting system validation diagnostic front panel LEDs and audible codes 78

8 Password security and resetting CMOS 80
Resetting CMOS and/or the password jumper 81
Changing a Setup or Power-on password 83
Deleting a Setup or Power-on password 83

9 Using HP PC Hardware Diagnostics (UEFI) 84
Using HP PC Hardware Diagnostics Windows 84
Downloading HP PC Hardware Diagnostics Windows 85
Downloading the latest HP PC Hardware Diagnostics Windows version 85
Downloading HP Hardware Diagnostics Windows by product name or number (select products only) 85
Installing HP PC Hardware Diagnostics Windows 85
Using HP PC Hardware Diagnostics UEFI 86
Starting HP PC Hardware Diagnostics UEFI 86
Downloading HP PC Hardware Diagnostics UEFI to a USB device 86
Downloading the latest HP PC Hardware Diagnostics UEFI version 87
Downloading HP PC Hardware Diagnostics UEFI by product name or number (select products only) 87
Using Remote HP PC Hardware Diagnostics UEFI settings (select products only) 87
Downloading Remote HP PC Hardware Diagnostics UEFI 87
Downloading the latest Remote HP PC Hardware Diagnostics UEFI version 87
Downloading Remote HP PC Hardware Diagnostics UEFI by product name or number 87
Customizing Remote HP PC Hardware Diagnostics UEFI settings 88

10 System backup and recovery 89
Backing up, restoring, and recovering in Windows 10 89
Creating recovery media and backups 89
Creating HP Recovery media (select products only) 89
Using Windows tools 90
Restore and recovery 91
Recovering using HP Recovery Manager 91
What you need to know before you get started 91
Using the HP Recovery partition (select products only) 92

Using HP Recovery media to recover 92
Changing the computer boot order 93
Removing the HP Recovery partition (select products only) 93

Appendix A Battery replacement 94

Appendix B Statement of memory volatility 97
Current BIOS steps 97
Nonvolatile memory usage 99
Questions and answers 101
Using HP Sure Start (select models only) 102

Appendix C Specifications 103

Appendix D Linux technical notes 105
System RAM 105
Audio 106
Network cards 106
Hyper-Threading Technology 106
NVIDIA Graphics Workstations 107

Index 108

1 Product features

Standard configuration features

Features may vary depending on the model.



Front panel components

NOTE: Refer to the illustration that most closely matches your computer. The computer model in the following image features the premium front input/output module.

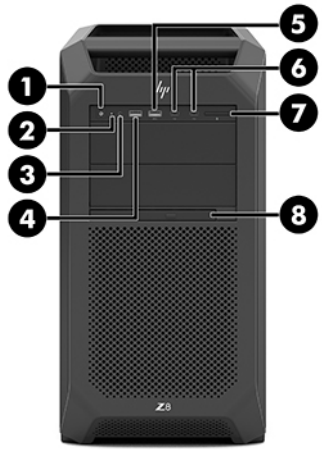

Item	Icon	Component
(1)		Power button
(2)		Drive light
(3)		Audio-out (headphone)/Audio-in (microphone) combo jack
(4)		USB 3.x SuperSpeed port with HP Sleep and Charge
(5)		USB 3.x SuperSpeed port
(6)		USB Type-C ports (2)
(7)		Memory card reader
(8)		Optical drive

NOTE: Refer to the illustration that most closely matches your computer. The computer model in the following image features the standard front input/output module.

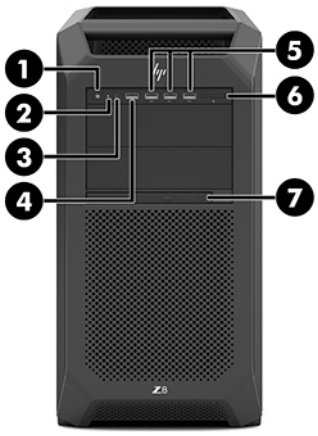

Item	Icon	Component
(1)		Power button
(2)		Drive light
(3)		Audio-out (headphone)/Audio-in (microphone) combo jack
(4)	SS	USB 3.x SuperSpeed port with HP Sleep and Charge
(5)	SS	USB 3.x SuperSpeed ports (3)
(6)		Memory card reader
(7)		Optical drive

Left-side components



Item	Component
(1)	Access panel handle
(2)	Access panel lock

Rear panel components

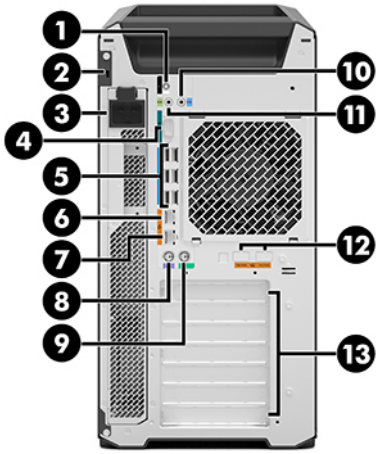

Item	Icon	Component	Item	Icon	Component
(1)		Power button On: The computer is on. Blinking white: The hard drive is being accessed.	(8)		PS/2 keyboard jack
(2)		Security cable slot	(9)		PS/2 mouse jack
(3)		Power connector	(10)		Audio-in (microphone) jack
(4)		Serial port	(11)		Audio-out (headphone)
(5)		USB 3.x SuperSpeed ports (6)	(12)		Ethernet ports (2; select products only)
(6)		RJ-45 (network) jack	(13)		PCIe slots (7)
(7)		RJ-45 (network) jack (AMT enabled)			

2 Illustrated parts catalog

Serial number location

Each computer has a unique serial number and a product ID number that are located on the exterior of the computer. Keep these numbers available for use when contacting support for assistance. [issue — email sent regarding serial number location]



Computer major components

Description
System boards (includes replacement thermal material):
Equipped with the Windows 10 operating system
Equipped with a non-Windows operating system
Processors (featuring Intel® vPro™ technology):
Intel® Xeon™ Platinum 8180 2.50-GHz (Turbo Boost 3.80-GHz) processor (38.50-MB cache, 28 cores, 205-W TDP)
Intel Xeon Platinum 8160 2.10-GHz (Turbo Boost 3.70-GHz) processor (33.00-MB cache, 24 cores, 150-W TDP)
Intel Xeon Gold 6154 3.00-GHz (Turbo Boost 3.70-GHz) processor (24.75-MB cache, 18 cores, 200-W TDP)
Intel Xeon Gold 6152 2.10-GHz (Turbo Boost 3.70-GHz) processor (30.25-MB cache, 22 cores, 140-W TDP)
Intel Xeon Gold 6148 2.40-GHz (Turbo Boost 3.70-GHz) processor (27.50-MB cache, 20 cores, 150-W TDP)
Intel Xeon Gold 6142 2.60-GHz (Turbo Boost 3.70-GHz) processor (22.00-MB cache, 16 cores, 150-W TDP)
Intel Xeon Gold 6140 2.30-GHz (Turbo Boost 3.70-GHz) processor (24.75-MB cache, 18 cores, 140-W TDP)
Intel Xeon Gold 6136 3.00-GHz (Turbo Boost 3.70-GHz) processor (24.75-MB cache, 12 cores, 150-W TDP)
Intel Xeon Gold 6134 3.20-GHz (Turbo Boost 3.70-GHz) processor (24.75-MB cache, 8 cores, 130-W TDP)

Description
Intel Xeon Gold 6132 2.60-GHz (Turbo Boost 3.70-GHz) processor (19.25-MB cache, 14 cores, 140-W TDP)
Intel Xeon Gold 6130 2.10-GHz (Turbo Boost 3.70-GHz) processor (22.00-MB cache, 16 cores, 125-W TDP)
Intel Xeon Gold 6128 3.40-GHz (Turbo Boost 3.70-GHz) processor (19.25-MB cache, 6 cores, 115-W TDP)
Intel Xeon Gold 5122 3.60-GHz (Turbo Boost 3.70-GHz) processor (16.50-MB cache, 4 cores, 105-W TDP)
Intel Xeon Gold 5120 2.20-GHz (Turbo Boost 3.20-GHz) processor (19.25-MB cache, 14 cores, 105-W TDP)
Intel Xeon Gold 5118 2.30-GHz (Turbo Boost 3.20-GHz) processor (16.50-MB cache, 12 cores, 105-W TDP)
Intel Xeon Silver 4116 2.10-GHz (Turbo Boost 3.00-GHz) processor (16.50-MB cache, 12 cores, 85-W TDP)
Intel Xeon Silver 4114 2.20-GHz (Turbo Boost 3.00-GHz) processor (13.75-MB cache, 10 cores, 85-W TDP)
Intel Xeon Silver 4112 2.60-GHz (Turbo Boost 3.00-GHz) processor (8.25-MB cache, 4 cores, 85-W TDP)
Intel Xeon Silver 4108 1.80-GHz (Turbo Boost 3.00-GHz) processor (11.00-MB cache, 8 cores, 85-W TDP)
Intel Xeon Bronze 3106 1.70-GHz processor (11.00-MB cache, 8 cores, 85-W TDP)
Intel Xeon Bronze 3104 1.70-GHz processor (8.25-MB cache, 6 cores, 85-W TDP)
I/O assembly:
Premium (includes audio-out [headphone]/audio-in [microphone] combo jack [with cable], drive light, memory card reader [select products only], power button [with cable], USB 3.x SuperSpeed port with HP Sleep and Charge, USB 3.x SuperSpeed port, USB Type-C ports [2], and speaker [with cable])
Entry-level (includes audio-out [headphone]/audio-in [microphone] combo jack [with cable], drive light, memory card reader [select products only], power button [with cable], USB 3.x SuperSpeed port with HP Sleep and Charge, USB 3.x SuperSpeed ports [3], and speaker [with cable])
Networking:
10-GBE Network Module Kit
Intel PRO/1000 single port GBE
Intel 1350 1-GBE PCIeG2×4 2p network interface card (NIC)
X550 10-GBE PCIeG3×4 2p NIC
X710 10-GB PCIeG3×8 2p NIC
Hard drive:
4-TB, 7200-rpm, SATA, 6-Gb/s
2-TB, 7200-rpm, SATA, 6-Gb/s
1-TB, 7200-rpm, SATA 3, 6-Gb/s
500-GB, 7200-rpm, SATA 3, 6-Gb/s
500-GB, 7200-rpm, small form factor (SFF) with self-encryption (SED)
300-GB, 7200-rpm, SFF, 15K SAS 12G
Memory (dual in-line memory module [DIMM]):
64-GB, PC4-2666V-L, 2-GB×4 CL19
32-GB, PC4-2666V-R, 2-GB×4 CL19
16-GB, PC4-2666V-R, 2-GB×4 CL19

Description
8-GB, PC4-2666V-R, 1-GB×8 CL19
HP Solid-state drives for workstations:
2-TB, SATA solid-state drive
1-TB, SATA solid-state drive
512-GB, SATA SED OPAL2 solid-state drive
512-GB, SATA solid-state drive
480-GB, SATA Enterprise solid-state drive
256-GB, SATA SED OPAL2 solid-state drive
256-GB, SATA solid-state drive
240-GB, SATA Enterprise solid-state drive
HP PCIe solid state drives for workstations:
HP Z Turbo Drive 1-TB MLC Z8G4 solid-state drive
HP Z Turbo Drive 512-GB MLC Z8G4 solid-state drive
HP Z Turbo Drive 256-GB MLC Z8G4 solid-state drive
HP Z Turbo Drive 1-TB TLC Z8G4 solid-state drive
HP Z Turbo Drive 512-GB TLC Z8G4 solid-state drive
HP Z Turbo Drive 256-GB TLC Z8G4 solid-state drive
HP Z Turbo Drive 512-GB Z8G4 SED solid-state drive
HP Z Turbo Drive 512-GB Z8G4 SED solid-state drive
PCIe Solid State Drive Kits (includes Dual M.2 solid-state drive and carrier) for workstations:
HP Z Turbo Drive 1-TB MLC Z8G4 Solid-State Drive Kit
HP Z Turbo Drive 512-GB MLC Z8G4 Solid-State Drive Kit
HP Z Turbo Drive 256-GB MLC Z8G4 Solid-State Drive Kit
HP Z Turbo Drive 1-TB TLC Z8G4 Solid-State Drive Kit
HP Z Turbo Drive 512-GB TLC Z8G4 Solid-State Drive Kit
HP Z Turbo Drive 256-GB TLC Z8G4 Solid-State Drive Kit
HP Z Turbo Drive 512-GB Z8G4 SED Solid-State Drive Kit
HP Z Turbo Drive 512-GB Z8G4 SED Solid-State Drive Kit
HP Z Turbo Drive Quad Pro solid state drives for workstations:
HP Z Turbo Drive Quad Pro 2×1-TB PCIe solid-state drive
HP Z Turbo Drive Quad Pro 2×512-GB PCIe solid-state drive
HP Z Turbo Drive Quad Pro 2×256-GB PCIe solid-state drive
HP Z Turbo Drive Quad Pro 1-TB solid-state drive
HP Z Turbo Drive Quad Pro 512-GB solid-state drive

Description
HP Z Turbo Drive Quad Pro 256-GB solid-state drive
Graphics cards:
FirePro W2100 2GB graphics card
NVIDIA Quadro P6000 24GB graphics card
NVIDIA Quadro P5000 16GB graphics card
NVIDIA Quadro P4000 8GB graphics card
NVIDIA Quadro P2000 5GB graphics card
NVIDIA Quadro P1000 4GB graphics card
NVIDIA Quadro P600 2GB graphics card
NVIDIA Quadro P400 2GB graphics card
Radeon Pro WX 7100 8GB graphics card
Radeon Pro WX 3100 4GB graphics card

3 Routine care, SATA drive guidelines, and disassembly preparation

This chapter provides general service information for the computer. Adherence to the procedures and precautions described in this chapter is essential for proper service.

⚠ CAUTION: When the computer is plugged into an AC power source, voltage is always applied to the system board. The power cord must be disconnected from the power source before opening the computer to prevent system board or component damage.

Electrostatic discharge information

A sudden discharge of static electricity from your finger or other conductor can destroy static-sensitive devices or microcircuitry. Often the spark is neither felt nor heard, but damage occurs. An electronic device exposed to electrostatic discharge (ESD) may not appear to be affected at all and can work perfectly throughout a normal cycle. The device may function normally for a while, but it has been degraded in the internal layers, reducing its life expectancy.

Networks built into many integrated circuits provide some protection, but in many cases, the discharge contains enough power to alter device parameters or melt silicon junctions.

Generating static

The following table shows how humidity affects the electrostatic voltage levels generated by different activities. A product can be degraded by 700 volts.

- Different activities generate different amounts of static electricity.
- Static electricity increases as humidity decreases.

	Relative Humidity		
Event	**55%**	**40%**	**10%**
Walking across carpet	7,500 V	15,000 V	35,000 V
Walking across vinyl floor	3,000 V	5,000 V	12,000 V
Motions of bench worker	400 V	800 V	6,000 V
Removing DIPs from plastic tube	400 V	700 V	2,000 V
Removing DIPs from vinyl tray	2,000 V	4,000 V	11,500 V
Removing DIPs from Styrofoam	3,500 V	5,000 V	14,500 V
Removing bubble pack from PCB	7,000 V	20,000 V	26,500 V
Packing PCBs in foam-lined box	5,000 V	11,000 V	21,000 V

Preventing electrostatic damage to equipment

Many electronic components are sensitive to ESD. Circuitry design and structure determine the degree of sensitivity. The following packaging and grounding precautions are necessary to prevent damage to electric components and accessories.

- To avoid hand contact, transport products in static-safe containers such as tubes, bags, or boxes.
- Protect all electrostatic-sensitive parts and assemblies with conductive or approved containers or packaging.
- Keep electrostatic-sensitive parts in their containers until they arrive at static-free stations.
- Place items on a grounded surface before removing them from their containers.
- Always be properly grounded when touching a sensitive component or assembly.
- Avoid contact with pins, leads, or circuitry.
- Place reusable electrostatic-sensitive parts from assemblies in protective packaging or conductive foam.

Personal grounding methods and equipment

Use the following equipment to prevent static electricity damage to equipment:

- **Wrist straps** are flexible straps with a maximum of one-megohm ± 10% resistance in the ground cords. To provide proper ground, a strap must be worn snugly against bare skin. The ground cord must be connected to the banana plug connector on the grounding mat or workstation and fit snugly into it.
- **Heel straps/Toe straps/Boot straps** can be used at standing workstations and are compatible with most types of shoes or boots. On conductive floors or dissipative floor mats, use them on both feet with a maximum of one-megohm ± 10% resistance between the operator and ground.

Static Shielding Protection Levels

Method	Voltage
Antistatic plastic	1,500
Carbon-loaded plastic	7,500
Metallized laminate	15,000

Grounding the work area

To prevent static damage at the work area, observe the following precautions:

- Cover the work surface with approved static-dissipative material. Provide a wrist strap connected to the work surface and use properly grounded tools and equipment.
- Use static-dissipative mats, foot straps, or air ionizers to give added protection.
- Handle electrostatic-sensitive components, parts, and assemblies by the case or PCB laminate. Handle them only at static-free work areas.
- Turn off power and input signals before inserting and removing connectors or test equipment.
- Use fixtures made of static-safe materials when fixtures must directly contact dissipative surfaces.
- Keep work area free of nonconductive materials such as ordinary plastic assembly aids and Styrofoam.
- Use field service tools, such as cutters, screwdrivers, and vacuums, that are conductive.

Recommended materials and equipment

The following grounding equipment is recommended to prevent electrostatic damage:

- Antistatic tape
- Antistatic smocks, aprons, or sleeve protectors
- Conductive bins and other assembly or soldering aids
- Conductive foam
- Conductive tabletop workstations with ground cords of one-megohm +/- 10% resistance
- Static-dissipative table or floor mats with hard ties to ground
- Field service kits
- Static awareness labels
- Wrist straps and footwear straps providing one-megohm +/- 10% resistance
- Material handling packages
- Conductive plastic bags
- Conductive plastic tubes
- Conductive tote boxes
- Opaque shielding bags
- Transparent metallized shielding bags
- Transparent shielding tubes

Operating guidelines

To prevent overheating and to help prolong the life of the computer:

- Keep the computer away from excessive moisture, direct sunlight, and extremes of heat and cold.
- Operate the computer on a sturdy, level surface. Leave a 10.2 cm (4-inch) clearance on all vented sides of the computer and above the monitor to permit the required airflow.
- Never restrict the airflow into the computer by blocking any vents or air intakes. Do not place the keyboard, with the keyboard feet down, directly against the front of the desktop unit as this also restricts airflow.
- Occasionally clean the air vents on all vented sides of the computer. Lint, dust, and other foreign matter can block the vents and limit the airflow. Be sure to unplug the computer before cleaning the air vents.
- Never operate the computer with the cover or side panel removed.
- Do not stack computers on top of each other or place computers so near each other that they are subject to each other's re-circulated or preheated air.
- If the computer is to be operated within a separate enclosure, intake and exhaust ventilation must be provided on the enclosure, and the same operating guidelines listed above will still apply.
- Keep liquids away from the computer and keyboard.
- Never cover the ventilation slots on the monitor with any type of material.
- Install or enable power management functions of the operating system or other software, including sleep states.

Routine care

General cleaning safety precautions

1. Never use solvents or flammable solutions to clean the computer.
2. Never immerse any parts in water or cleaning solutions; apply any liquids to a clean cloth and then use the cloth on the component.
3. Always unplug the computer when cleaning with liquids or damp cloths.
4. Always unplug the computer before cleaning the keyboard, mouse, or air vents.
5. Disconnect the keyboard before cleaning it.
6. Wear safety glasses equipped with side shields when cleaning the keyboard.

Cleaning the computer case

Follow all safety precautions in General cleaning safety precautions on page 13 before cleaning the computer.

To clean the computer case, follow the procedures described below:

- To remove light stains or dirt, use plain water with a clean, lint-free cloth or swab.
- For stronger stains, use a mild dishwashing liquid diluted with water. Rinse well by wiping the surface with a cloth or swab dampened with clear water.
- For stubborn stains, use isopropyl (rubbing) alcohol. No rinsing is needed; alcohol will evaporate quickly without leaving a residue.
- After cleaning, always wipe the unit with a clean, lint-free cloth.
- Occasionally clean the air vents on the computer. Lint and other foreign matter can block the vents and limit the airflow.

Cleaning the keyboard

Follow all safety precautions in General cleaning safety precautions on page 13 before cleaning the keyboard.

To clean the tops of the keys or the keyboard body, follow the procedures described in Cleaning the computer case on page 13.

When cleaning debris from under the keys, review all rules in General cleaning safety precautions on page 13 before following these procedures:

⚠ CAUTION: Use safety glasses equipped with side shields before attempting to clean debris from under the keys.

- Visible debris underneath or between the keys may be removed by vacuuming or shaking.
- Canned, pressurized air may be used to clean debris from under the keys. Caution should be used as too much air pressure can dislodge lubricants applied under the wide keys.
- If you want to remove a key, use a specially designed key puller to prevent damage to the keys. This tool is available through many electronics supply outlets.

CAUTION: Never remove a wide, level key (like the space bar) from the keyboard. If these keys are improperly removed or installed, the keyboard may not function properly.

- Cleaning under a key may be done with a swab moistened with isopropyl alcohol and then squeezed out. Be careful not to wipe away lubricants necessary for proper key functions. Use tweezers to remove any fibers or dirt in confined areas. Allow the parts to air dry before reassembly.

Cleaning the monitor

- Wipe the monitor screen with a towelette designed for cleaning monitors or with a clean cloth moistened with water. Do not use sprays or aerosols directly on the screen; the liquid may seep into the housing and damage a component. Never use solvents or flammable liquids on the monitor.
- To clean the monitor body follow the procedures in Cleaning the computer case on page 13.

Service considerations

Listed below are some of the considerations that you should keep in mind during the disassembly and assembly of the computer.

Tools and software requirements

To service the computer, you need the following:

- Diagnostics software
- Flat-bladed screwdriver (may sometimes be used in place of a Torx screwdriver)
- Phillips #2 screwdriver
- Torx30 screwdriver
- Torx15 screwdriver

Screws

The screws used in the computer are not interchangeable. They may have standard or metric threads and may be of different lengths. If an incorrect screw is used during the reassembly process, it can damage the unit. HP strongly recommends that all screws removed during disassembly be kept with the part that was removed, then returned to their proper locations.

CAUTION: As each subassembly is removed from the computer, it should be placed away from the work area to prevent damage.

Cables and connectors

Most cables used throughout the unit are flat, flexible cables. These cables must be handled with care to avoid damage. Apply only the tension required to seat or unseat the cables during insertion or removal from the connector. Handle cables by the connector whenever possible. In all cases, avoid bending or twisting the cables, and ensure that the cables are routed in such a way that they cannot be caught or snagged by parts being removed or replaced.

⚠ CAUTION: When servicing this computer, ensure that cables are placed in their proper location during the reassembly process. Improper cable placement can damage the computer.

Hard Drives

Handle hard drives as delicate, precision components, avoiding all physical shock and vibration. This applies to failed drives as well as replacement spares.

- If a drive must be mailed, place the drive in a bubble-pack mailer or other suitable protective packaging and label the package “Fragile: Handle With Care.”
- Do not remove hard drives from the shipping package for storage. Keep hard drives in their protective packaging until they are actually mounted in the computer.
- Avoid dropping drives from any height onto any surface.
- If you are inserting or removing a hard drive, turn off the computer. Do not remove a hard drive while the computer is on or in standby mode.
- Before handling a drive, ensure that you are discharged of static electricity. While handling a drive, avoid touching the connector.
- Do not use excessive force when inserting a drive.
- Avoid exposing a hard drive to liquids, temperature extremes, or products that have magnetic fields such as monitors or speakers.

Lithium coin cell battery

The battery that comes with the computer provides power to the real-time clock and has a minimum lifetime of about three years.

See the appropriate removal and replacement chapter for the chassis you are working on in this guide for instructions on the replacement procedures.

⚠ WARNING! This computer contains a lithium battery. There is a risk of fire and chemical burn if the battery is handled improperly. Do not disassemble, crush, puncture, short external contacts, dispose in water or fire, or expose it to temperatures higher than 140ºF (60ºC). Do not attempt to recharge the battery.

NOTE: Batteries, battery packs, and accumulators should not be disposed of together with general household waste. In order to forward them for recycling or proper disposal, please use the public collection system or return them to HP.

SATA hard drives

Serial ATA Hard Drive Characteristics	
Number of pins/conductors in data cable	7/7
Number of pins in power cable	15
Maximum data cable length	39.37 in (100 cm)
Data interface voltage differential	400-700 mV
Drive voltages	3.3 V, 5 V, 12 V
Jumpers for configuring drive	N/A
Data transfer rate	6.0 Gb/s

SMART ATA drives

The Self Monitoring Analysis and Recording Technology (SMART) ATA drives for HP personal computers have built-in drive failure prediction that warns the user or network administrator of an impending failure (crash) of the hard drive. The SMART drive tracks fault prediction and failure indication parameters such as reallocated sector count, spin retry count, and calibration retry count. If the drive determines that a failure is imminent, it generates a fault alert.

4 Removal and replacement procedures

Adherence to the procedures and precautions described in this chapter is essential for proper service. After completing all necessary removal and replacement procedures, run the Diagnostics utility to verify that all components operate properly.

NOTE: Not all features listed in this guide are available on all computers.

Preparation for disassembly

WARNING! Voltage is always present on the system board when the computer is plugged into an active AC outlet. To avoid possible personal injury and damage to the equipment the power cord should be disconnected from the computer and/or the AC outlet before opening the computer.

See Routine care, SATA drive guidelines, and disassembly preparation on page 10 for initial safety procedures.

1. Remove/disengage any security devices that prohibit opening the computer.
2. Remove all removable media, such as compact discs or USB flash drives, from the computer.
3. Turn off the computer properly through the operating system, then turn off any external devices.
4. Disconnect the power cord from the power outlet and disconnect any external devices.

CAUTION: Turn off the computer before disconnecting any cables.

Regardless of the power-on state, voltage is always present on the system board as long as the system is plugged into an active AC outlet. In some systems the cooling fans are on even when the computer is in the “Standby,” or “Suspend” modes. The power cord should always be disconnected before servicing a unit.

NOTE: During disassembly, label each cable as you remove it, noting its position and routing. Keep all screws with the removed components.

Top cover

1. Prepare the computer for disassembly (see Preparation for disassembly on page 17).
2. Position the computer in the upright position with the right side toward you.
3. Release the two tabs **(1)** on the rear panel from the computer.
4. Swing the rear edge of the top cover **(2)** away from the computer.
5. Remove the top cover **(3)**.



6. Remove the top cover.

Reverse this procedure to install the top cover.

Front bezel

1. Prepare the computer for disassembly (see Preparation for disassembly on page 17).
2. Position the computer on its right side with the bottom toward you.
3. Release the two tabs **(1)** on the bottom of the front bezel from the computer.
4. Swing the bottom edge of the front bezel **(2)** away from the computer.
5. Remove the front bezel **(3)**.



6. Remove the front bezel.

Reverse this procedure to install the front bezel.

Right panel

1. Prepare the computer for disassembly (see Preparation for disassembly on page 17).
2. Position the computer with the right side toward you.
3. Remove the two Torx15 M3.3×7.0 screws **(1)** that secure the right panel to the computer.
4. Remove the right panel **(2)** by swinging the right edge away from the computer.

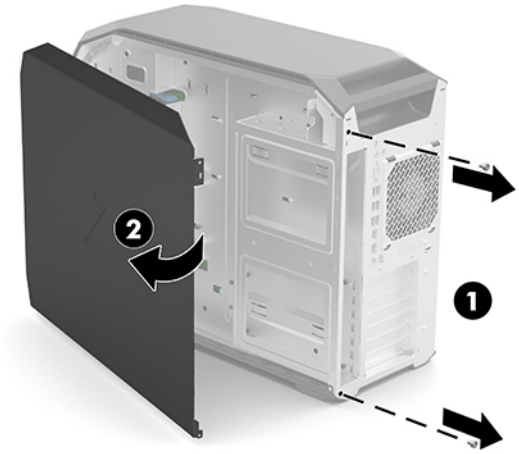

Reverse this procedure to install the right panel.

Power supply

Follow these steps to remove the power supply:

1. Prepare the computer for disassembly (see Preparation for disassembly on page 17).
2. Position the computer with the rear panel toward you.
3. Press down and hold the power supply release latch **(1)**.
4. Remove the power supply **(2)** by sliding it out of the computer.

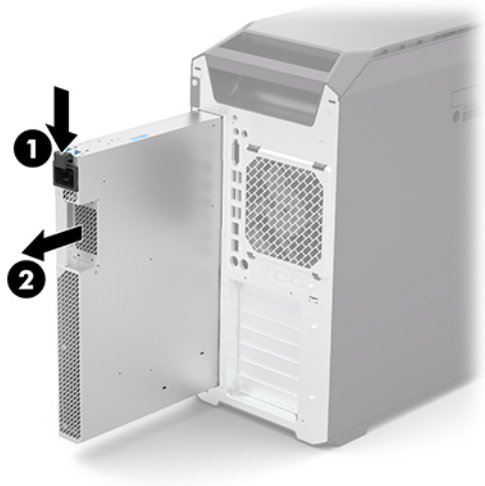

To test the power supply:

1. Remove the power supply from the computer.
2. Connect the power cord to the wall outlet.
3. Connect power cord to the power supply **(1)**.
4. If the power supply fans **(2)** turn on and the built-in self-test (BIST) light **(3)** illuminates, the power supply is good and the power supply does not need to be replaced.

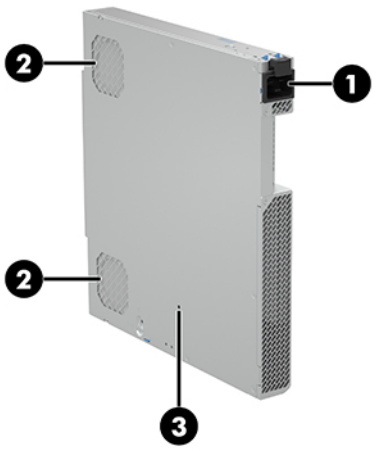

To install the power supply, slide it into the computer until it latches into place.

Access panel

1. Prepare the computer for disassembly (see Preparation for disassembly on page 17).
2. Position the computer with the left side toward you.
3. Swing the access panel release latch **(1)** up.
4. Use the access panel release latch to swing the top edge of the access panel **(2)** away from the computer.
5. Remove the access panel **(3)** by lifting it straight up.

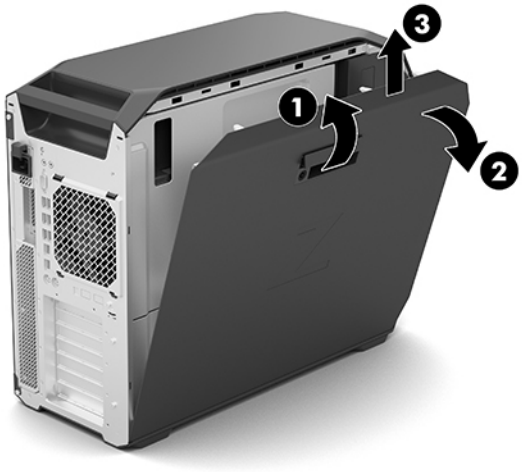

Reverse this procedure to install the access panel.

Storage device

1. Prepare the computer for disassembly (see Preparation for disassembly on page 17).
2. Remove the access panel (see Access panel on page 22).
3. Release the drive cage door **(1)** by swinging it open.
4. Remove the drive cage **(2)** from the computer.

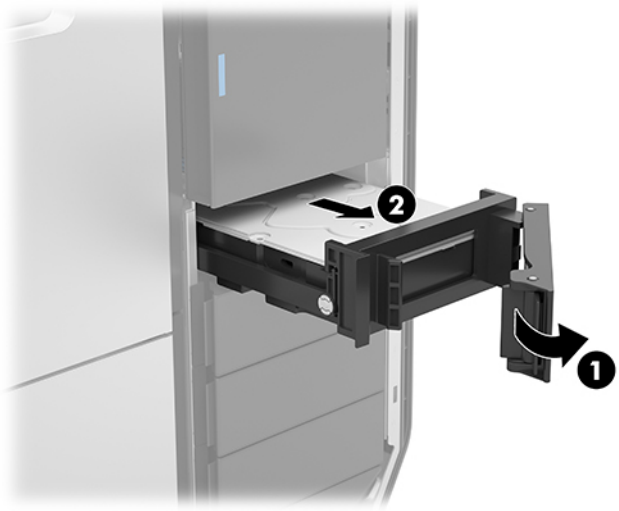

5. Separate the drive cage retention arms **(1)** from the storage device, making sure the retention pins **(2)** fully release from the device.
6. Remove the storage device **(3)** from the drive cage.

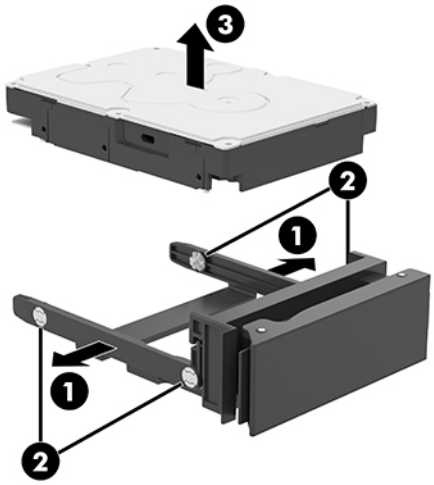

Reverse this procedure to install the storage device.

Interior covers

1. Prepare the computer for disassembly (see Preparation for disassembly on page 17).
2. Remove the access panel (see Access panel on page 22).
3. Position the computer on its right side with the bottom toward you.
4. Use the interior upper cover release latch **(1)** to swing the interior upper cover **(2)** up and back until it rests at angle.
5. Remove the interior upper cover **(3)**.

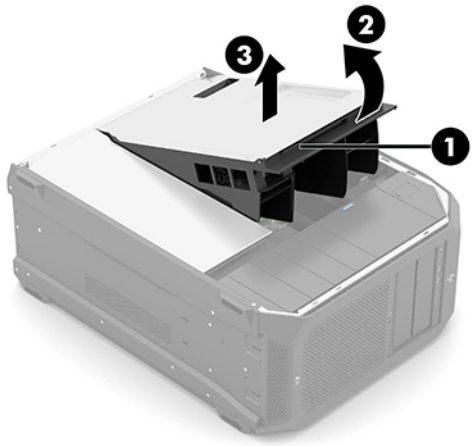

6. Use the interior lower cover release latch **(1)** to swing the interior lower cover **(2)** up and back until it rests at angle.
7. Remove the interior lower cover **(3)**.

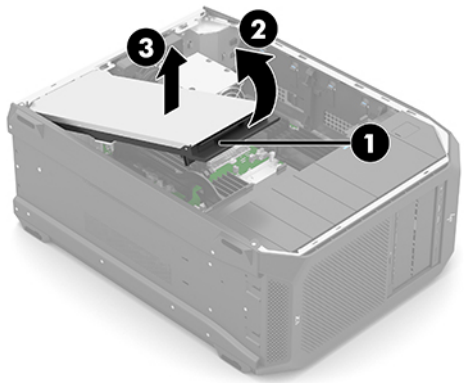

Reverse this procedure to install the interior upper cover and interior lower cover.

Rear fan

Follow these steps to remove the rear fan:

1. Prepare the computer for disassembly (see Preparation for disassembly on page 17).
2. Remove the access panel (see Access panel on page 22).
3. Remove the interior upper cover (see Interior covers on page 24).
4. Release the two upper retention clips **(1)** that secure the rear fan to the computer chassis.
5. Slide the rear fan **(2)** away from the computer.
6. Lift the rear fan **(3)** as far as the rear fan cable allows.
7. Disconnect the rear fan cable **(4)** from the system board.

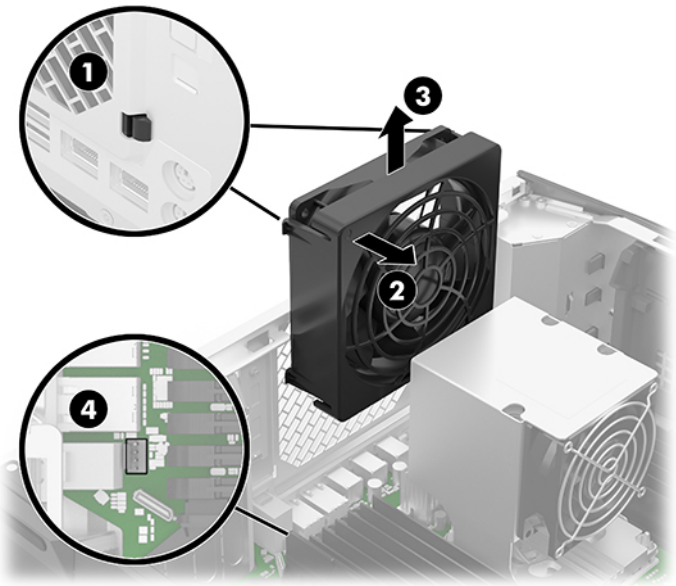

8. Remove the rear fan.

Reverse this procedure to install the rear fan.

Optical drive

1. Prepare the computer for disassembly (see Preparation for disassembly on page 17).
2. Remove the access panel (see Access panel on page 22).
3. Remove the interior upper cover (see Interior covers on page 24).
4. Disconnect the optical drive cables from the optical drive rear panel **(1)**.
5. Release the optical drive by lifting up on the drive release bar **(2)**.
6. Press on the optical drive rear panel **(3)**.
7. Remove the optical drive **(4)**.

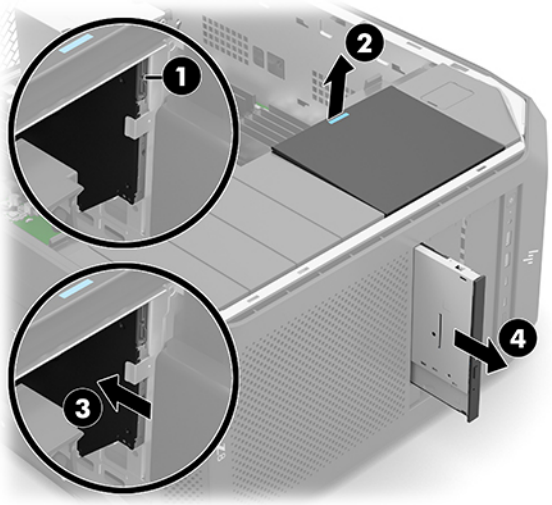

Reverse this procedure to install the optical drive.

Internal PCIe bracket

Follow these steps to remove the internal PCIe bracket:

1. Prepare the computer for disassembly (see Preparation for disassembly on page 17).
2. Remove the access panel (see Access panel on page 22).
3. Remove the interior upper cover and interior lower cover (see Interior covers on page 24).
4. Release the retention tab **(1)** that secures the internal PCIe bracket to the computer.
5. Release the internal PCIe bracket **(2)** by sliding it to the left.
6. Remove the internal PCIe bracket **(3)**.

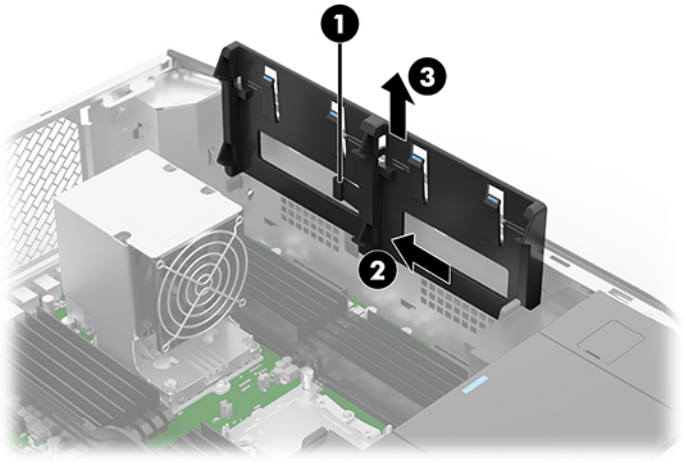

Reverse this procedure to install the internal PCIe bracket.

Memory fan

Follow these steps to remove the memory fan:

1. Prepare the computer for disassembly (see Preparation for disassembly on page 17), and then remove the following components:
   a. Access panel (see Access panel on page 22)
   b. Interior upper cover (see Interior covers on page 24)
   c. Internal PCIe bracket (see Internal PCIe bracket on page 27)
2. Release the two retention clips **(1)** that secure the memory fan to the computer.
3. Tilt the memory fan **(2)** away from the computer.
4. Lift the memory fan **(3)** as far as the memory fan cable allows.
5. Disconnect the memory fan cable **(4)** from the system board.

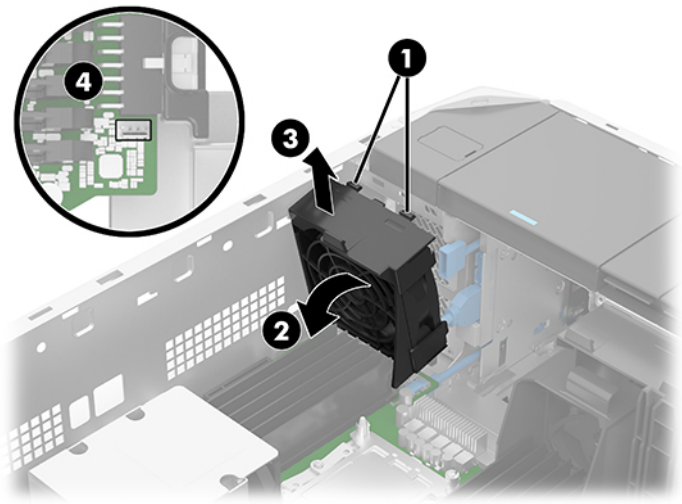

6. Remove the memory fan.

Reverse this procedure to install the memory fan.

I/O assembly

Follow these steps to remove the I/O assembly:

1. Prepare the computer for disassembly (see Preparation for disassembly on page 17), and then remove the following components:
   a. Access panel (see Access panel on page 22)
   b. Interior upper cover (see Interior covers on page 24)
   c. Internal PCIe bracket (see Internal PCIe bracket on page 27)
   d. Memory fan (see Memory fan on page 28)
2. Disconnect the I/O front audio cable **(1)** from the system board.
3. Disconnect the I/O assembly UI cable **(2)** from the I/O assembly.
4. Disconnect the I/O assembly USB cable **(3)** from the I/O assembly.
5. Disconnect the I/O assembly memory card reader cable **(4)** from the I/O assembly.
6. Disconnect the I/O assembly FIOUI-Premium (OClink) cable **(5)** from the I/O assembly.

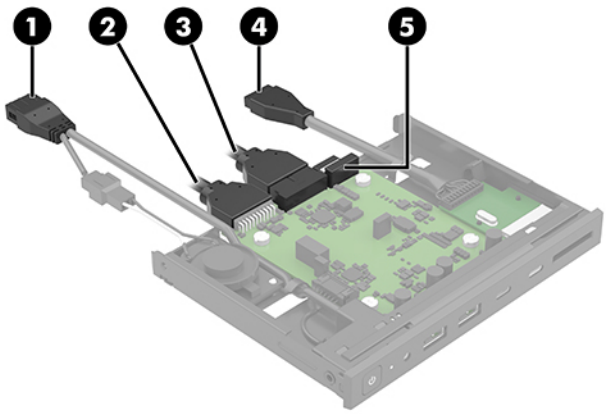

7. Release the I/O assembly by lifting up on the drive release bar **(1)**.

8. Remove the I/O assembly **(2)**.

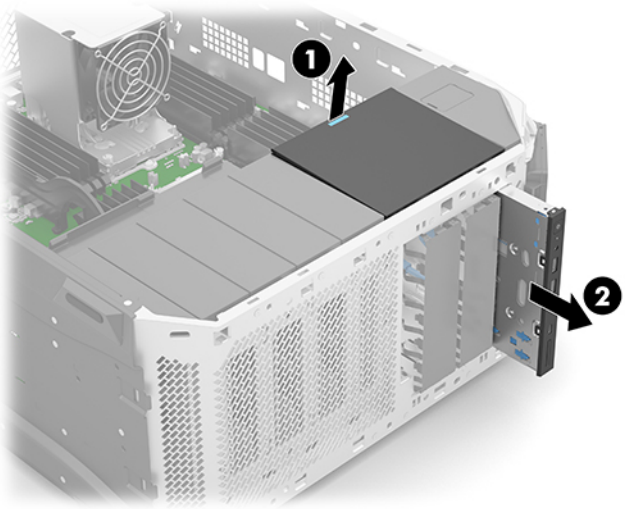

Reverse this procedure to install the I/O assembly.

Front card guide and fans

Follow these steps to remove the front card guide and fans:

1. Prepare the computer for disassembly (see Preparation for disassembly on page 17).
2. Remove the access panel (see Access panel on page 22).
3. Remove the interior upper cover and interior lower cover (see Interior covers on page 24).
4. Disconnect the cables from the placeholder sockets **(1)** on the front card guide and fans housing.
5. Release the two retention clips **(2)** that secure the front card guide and fans to the computer.
6. Tilt the front card guide and fans **(3)** away from the computer.
7. Lift the front card guide and fans **(4)** as far as the front card guide and fans cable allows.
8. Disconnect the front card guide and fans cables **(5)** from the system board.

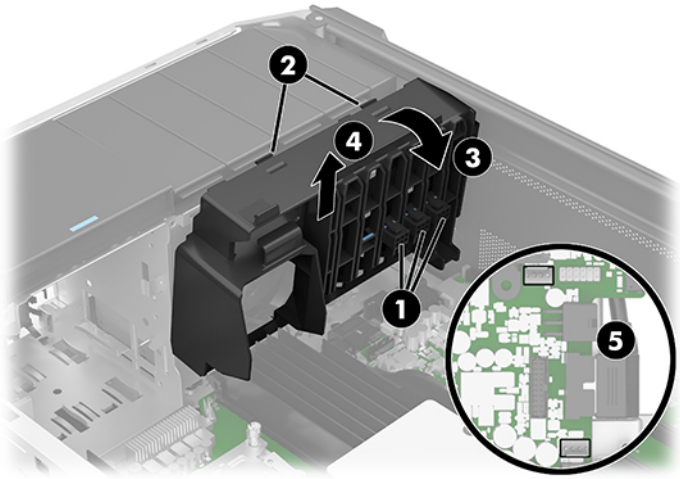

9. Remove the front card guide and fans.

Reverse this procedure to install the front card guide and fans.

System board

NOTE: The system board spare part kit includes replacement thermal material.

Follow these steps to remove the system board:

1. Prepare the computer for disassembly (see Preparation for disassembly on page 17), and then remove the following components:
   a. Access panel (see Access panel on page 22)
   b. Interior upper cover and interior lower cover (see Interior covers on page 24)
   c. Rear fan (see Rear fan on page 25)
   d. Internal PCIe bracket (see Internal PCIe bracket on page 27)
   e. Memory fan (see Memory fan on page 28)
   f. Front card guide and fans (see Front card guide and fans on page 31)

   NOTE: When replacing the system board, be sure that the heat sink (see Heat sink on page 34) is removed from the defective system board and installed on the replacement system board.

2. Disconnect the following cables from the system board:

   (1) Power supply P3 cable

   (2) Front audio cable

   (3) Power supply P2 cable

   (4) Power supply P4 cable

   (5) USB cable

   (6) FUI cable

   (7) Power supply P1 cable

   (8) Drive SATA cables (up to 8 locations)

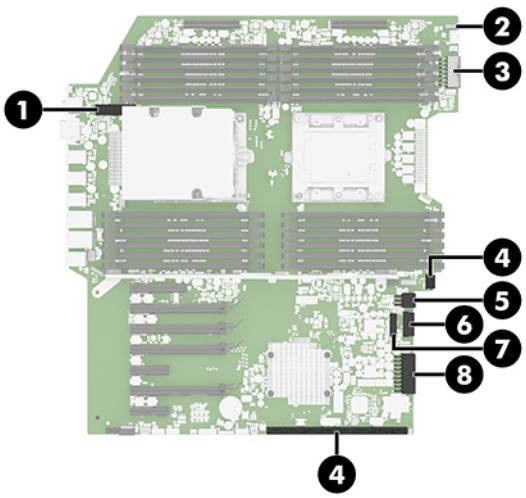

3. Use the plastic handle **(1)** to slide the system board **(2)** away from the computer rear chassis, and then remove the system board.

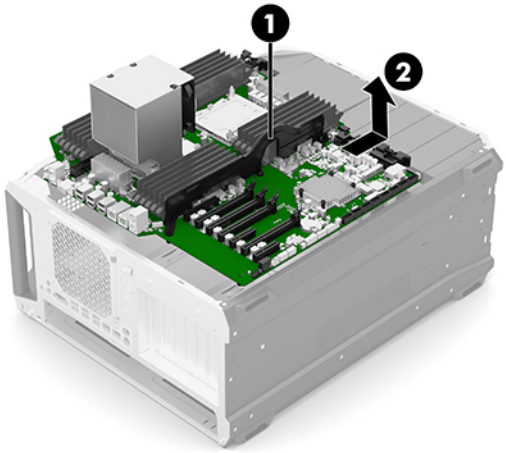

Reverse this procedure to install the system board.

Heat sink

NOTE: The heat sink spare part kit includes replacement thermal material.

Follow these steps to remove the heat sink:

NOTE: When replacing the heat sink, be sure that the processor (see Processor on page 35) is removed from the defective heat sink and installed on the replacement heat sink.

1. Prepare the computer for disassembly (see Preparation for disassembly on page 17).
2. Remove the access panel (see Access panel on page 22).
3. Remove the interior upper cover and interior lower cover (see Interior covers on page 24).
4. Disconnect the heat sink fan cable **(1)** from the system board.

   CAUTION: The heat sink captive screws must be loosened and tightened in the sequence indicated on the label on the heat sink. Failure to follow this sequence can result in damage to the heat sink, the processor, and the system board.

5. In the sequence indicated on the label on the heat sink, loosen the four slotted Torx30 captive screws **(2)** that secure the heat sink to the computer.

   CAUTION: The processor is attached to the bottom of the heat sink. When the heat sink is removed, it is recommended that the heat sink be left resting upside down, with the processor resting on top of the heat sink. Failure to follow this caution can result in damage to the processor.

6. Remove the heat sink **(3)**.

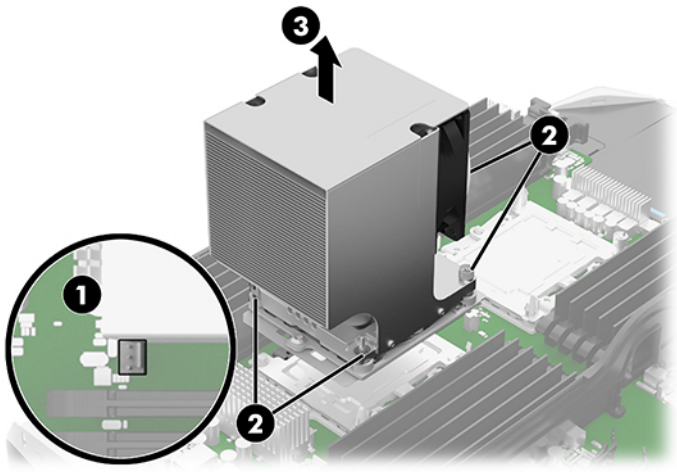

Reverse this procedure to install the heat sink.

Processor

NOTE: The processor spare park kit includes replacement thermal material.

Follow these steps to remove the processor:

1. Prepare the computer for disassembly (see Preparation for disassembly on page 17), and then remove the following components:
   a. Access panel (see Access panel on page 22)
   b. Interior upper cover and interior lower cover (see Interior covers on page 24)
   c. Heat sink (see Heat sink on page 34)
2. Turn the heat sink upside down with the heat sink fan toward you.
3. Release the four clips **(1)** that secure the processor holder to the heat sink.
4. Remove the processor holder **(2)** from the heat sink by lifting it straight up.
5. Carefully release the processor holder clips **(3)**.
6. Remove the processor **(4)** from the processor holder by lifting it straight up.

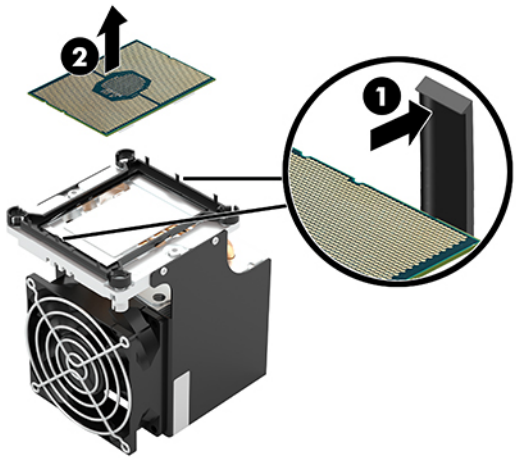

NOTE: The thermal material must be thoroughly cleaned from the surfaces of the processor **(1)** and the heat sink **(2)** and reinstalled each time the processor is removed. Replacement thermal material is included with the processor and heat sink spare part kits.

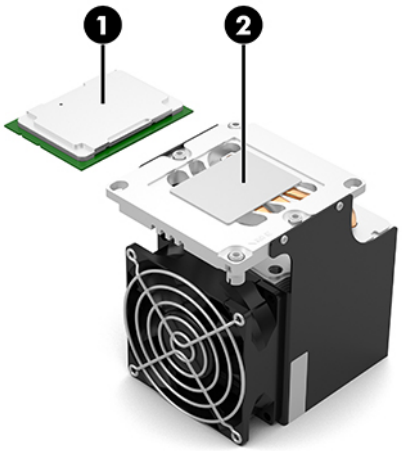

⚠ CAUTION: When installing the processor into the processor holder, make sure the corner of the processor with the triangle icon **(1)** is aligned with the corner of the processor holder with the triangle icon **(2)**, and the notches **(3)** in the processor are aligned with the ribs **(4)** on the processor holder clips. When installing the processor and processor holder onto the heat sink, make sure the corner of the processor holder with the triangle icon **(2)** is aligned with the corner of the heat sink with the triangle icon **(5)**. Failure to follow this caution can result in damage to the processor and system board and system failure.

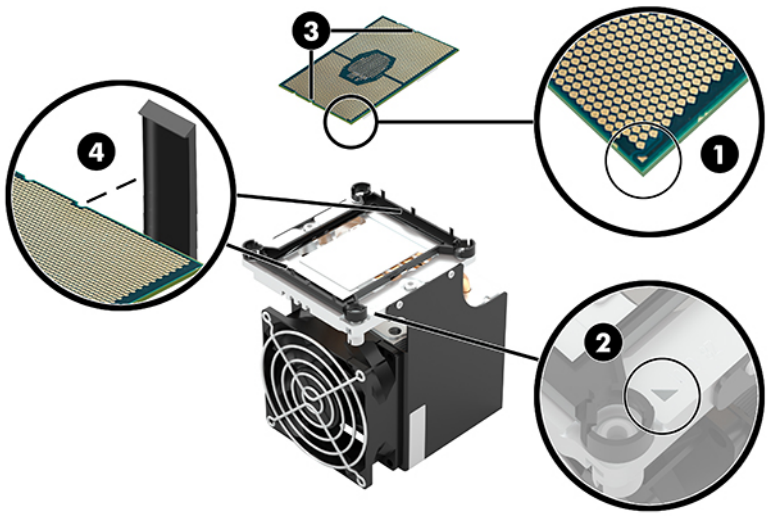

5 Computer Setup (F10) Utility

Computer Setup (F10) Utilities

Use Computer Setup (F10) Utility to do the following:

- Change settings from the defaults or restore the settings to default values.
- View the system configuration, including settings for processor, graphics, memory, audio, storage, communications, and input devices.
- Modify the boot order of bootable devices such as hard drives, optical drives, or USB flash media devices.
- Establish an Ownership Tag, the text of which is displayed each time the system is turned on or restarted.
- Enter the Asset Tag or property identification number assigned by the company to this computer.
- Enable the power-on password prompt during system restarts (warm boots) as well as during power-on.
- Establish an administrator password that controls access to the Computer Setup (F10) Utility and the settings described in this section.
- Establish minimum requirements for valid passwords, including length and required types of characters.
- Secure integrated I/O functionality, including the serial, USB, or audio, or embedded NIC, so that they cannot be used until they are unsecured.
- Enable or disable different types of boot sources.
- Configure features such as Secure Boot, power management, virtualization support, and language and keyboard type used in Setup and POST.
- Replicate the system setup by saving system configuration information on a USB device and restoring it on one or more computers.
- Enable or disable DriveLock security or securely erase a hard drive (when supported by drive).

Using Computer Setup (F10) Utilities

Computer Setup can be accessed only by turning the computer on or restarting the system. To access the Computer Setup Utilities menu, complete the following steps:

1. Turn on or restart the computer.
2. Repeatedly press F10 when the monitor light comes on to access the utility.

   You can also press Esc to a menu that allows you to access different options available at startup, including the Computer Setup utility.

NOTE: If you do not press F10 at the appropriate time, you must restart the computer and again repeatedly press F10 when the monitor light comes on to access the utility.

3. A choice of four headings appears in the Computer Setup Utilities menu: Main, Security, Advanced, and UEFI Drivers.
4. Use the arrow (left and right) keys to select the appropriate heading. Use the arrow (up and down) keys to select the option you want, then press Enter. To return to the Computer Setup Utilities menu, press Esc.
5. To apply and save changes, select **Main** > **Save Changes and Exit**.
   - If you have made changes that you do not want applied, select **Ignore Changes and Exit**.
   - To restore settings from the Advanced and Main menus to original values, select **Apply Factory Defaults and Exit**.
   - To restore settings from the Advanced and Main menus to those previously saved by **Save Custom Defaults**, select **Apply Custom Defaults and Exit**. If no custom defaults have been saved, then factory defaults are used.

NOTE: Settings in the **Security** menu are not modified by **Apply Defaults**. Those values are reset by **Restore Security Settings to Default** at the bottom of the **Security** menu.

NOTE: Not all settings shown in the following sections are available for all models

CAUTION: Do NOT turn the computer power OFF while the BIOS is saving the Computer Setup (F10) changes because the settings could become corrupted. It is safe to turn off the computer only after exiting the F10 Setup screen.

Computer Setup—Main

NOTE: Support for specific Computer Setup options may vary depending on the hardware configuration.

Table 5-1 Computer Setup—Main

Option	Description
System Information	Lists all information in following list if **Advanced System Information** is selected. Lists smaller subset if **Basic System Information** is selected. • Product name • Installed memory size • Processor type • Processor cache size (L1/L2/L3) • Processor speed • MicroCode Revision • Processor Stepping • DIMM size (for each installed module) • System BIOS version • ME Firmware version (Intel only) • Video BIOS version • Super I/O Firmware version • Born On Date • Serial Number • SKU number • UUID (Universally Unique Identifier) • Asset Tracking Number • Feature Byte • Build ID • Product Family • System Board ID • System Board CT • USB Type-C Controller(s) firmware version • Integrated MAC Address
System Diagnostics	If the hard drive has the HP Advanced Diagnostics installed, the application will launch. If HP Advanced Diagnostics is not installed, then a basic version built into the BIOS will provide the capability to perform the following functions: • Memory Test • Hard Drive Check • Language
Update System BIOS	Lets you update the system BIOS from www.hp.com or another network server, from a removable USB drive, or from a file located on the hard drive. • 'Check HP.com for BIOS Updates' or 'Check the Network for BIOS Updates'

Table 5-1 Computer Setup—Main (continued)

Option	Description
	The string that appears here depends on the setting in 'BIOS Update Preferences'. • Lock BIOS Version If this option is checked, the system is locked to the current BIOS version and updates are not allowed. • BIOS Update Preferences Allows the administrator to select the source of network updates (www.hp.com or another network server) and allows configuration of a periodic check for updates, including policies for: ■ Check for updates and prompt the user to accept or reject the update at that time ■ Check for updates and install all new versions ■ Check for updates and install only new versions marked important • Network Configuration Settings • Update BIOS Using Local Media Lets you access files on either USB storage or the hard drive. The HP BIOS Update and Recovery application included in BIOS Softpaqs at www.hp.com will copy the BIOS file to the correct location on the hard drive or USB device.
System IDs	Lets you set the following values: • Asset Tracking Number • Ownership Tag
Replicated Setup	Backup current settings to USB device Saves system configuration to a formatted USB flash media device. Restore current settings from USB device Restores system configuration from a USB flash media device.
Save Custom Defaults	Saves the current system configuration settings as the custom default set.
Apply Custom Defaults and Exit	Applies the custom default settings to the computer after rebooting. Does not apply to options in the **Security** menu.
Apply Factory Defaults and Exit	Restores the factory system configuration settings to the computer after rebooting. Does not apply to options in the **Security** menu.
Ignore Changes and Exit	Exits Computer Setup without applying or saving any changes.
Save Changes and Exit	Saves changes to current system configuration, exits Computer Setup, and reboots.

Computer Setup—Security

NOTE: Support for specific Computer Setup options may vary depending on the hardware configuration.

Table 5-2 Computer Setup—Security

Option	Description
Create BIOS Administrator Password	Lets you set and enable a BIOS administrator password, which includes the following privileges: • Manage other BIOS users • Full access to BIOS policy and settings • Unlock the computer when other BIOS users fail the preboot authentication. NOTE: Creating a BIOS user disables the Fast Boot option. NOTE: If the password is set, it is required to change Computer Setup options, update the BIOS, and make changes to certain plug and play settings under Windows.
Change BIOS Administrator Password (This selection is active only if a BIOS administrator password is set.)	Lets you change the BIOS administrator password. You must know the current password to be able to change it.
Password Policies	Let you set the guidelines for a valid password. Options include: • Password minimum length • Requires at least one symbol • Requires at least one number • Requires at least one upper case character • Requires at least one lower case character • Allow spaces **Clear Password Jumper** Select 'Honor' to allow or 'Ignore' to not allow the absence of the password jumper to clear the passwords at boot up. Default is 'Honor'.
Security Configuration	**TPM Embedded Security** • **TPM Device** Lets you set the Trusted Platform Module as available or hidden. • **Clear TPM** Select to reset the TPM to an unowned state. After the TPM is cleared, it is also turned off. To temporarily suspend TPM operations, turn the TPM off instead of clearing it. CAUTION: Clearing the TPM resets it to factory defaults and turns it off. You will lose all created keys and data protected by those keys. **BIOS Sure Start** • **Verify Boot Block on every Boot** Select to check validity of boot block region each boot. If not selected, boot block region will be validated on power cycles. • **Data Recovery Policy** Select 'Automatic' or 'Manual' to set data recovery policy. 'Manual' lets you select whether or not to execute recovery of a corrupted region if it is detected.

Table 5-2 Computer Setup—Security (continued)

Option	Description
Create BIOS Power-On Password	Lets you set and enable a BIOS power-on password. The power-on password prompt appears after a power cycle or reboot. If the user does not enter the correct power-on password, the unit will not boot.
Change BIOS Power-On Password (This selection is active only if a BIOS power-on password is set.)	Lets you change the BIOS power-on password. You must know the current password to be able to change it.
DriveLock	Allows you to assign or modify a master or user password for hard drives. When this feature is enabled, the user is prompted to provide one of the DriveLock passwords during POST. If neither is successfully entered, the hard drive will remain inaccessible until one of the passwords is successfully provided during a subsequent cold-boot sequence. NOTE: This selection will only appear when at least one drive that supports the DriveLock feature is attached to the system. CAUTION: Be aware that these settings take place immediately. A save is not necessary. CAUTION: Be sure to document the DriveLock password. Losing a DriveLock password will render a drive permanently locked. After you select a drive, the following options are available: **Set DriveLock Master Password**. Sets the drive's master password but does not enable DriveLock. **Enable DriveLock**. Sets the drive's user password and enables DriveLock.
Secure Erase	Lets you select a hard drive to completely erase. Once a hard drive has been erased with a program that utilizes Secure Erase firmware commands, no file recovery program, partition recovery program, or other data recovery method will be able to extract data from the drive.
Save/Restore MBR of the system hard drive	NOTE: Windows 10 systems are generally not formatted to include an MBR. Instead they use GUID Partition Table (GPT) format, which better supports large hard drives. Enabling this feature will save the Master Boot Record (MBR) of the system hard drive. If the MBR gets changed, the user will be prompted to restore the MBR. Default is disabled. The MBR contains information needed to successfully boot from a disk and to access the data stored on the disk. Master Boot Record Security may prevent unintentional or malicious changes to the MBR, such as those caused by some viruses or by the incorrect use of certain disk utilities. It also allows you to recover the "last known good" MBR, should changes to the MBR be detected when the system is restarted. NOTE: Most operating systems control access to the MBR of the current bootable disk; the BIOS cannot prevent changes that may occur while the operating system is running. Restores the backup Master Boot Record to the current bootable disk. Default is disabled. Only appears if all of the following conditions are true: • MBR security is enabled • A backup copy of the MBR has been previously saved • The current bootable disk is the same disk from which the backup copy was saved CAUTION: Restoring a previously saved MBR after a disk utility or operating system has modified the MBR, may cause the data on the disk to become inaccessible. Only restore a previously saved MBR if you are confident that the current bootable disk's MBR has been corrupted or infected with a virus.
Smart Cover	**Cover Lock** (Lock/Unlock) Default is 'Unlock'. **Cover Removal Sensor** (Disabled/Notify user/Administrator password)

Table 5-2 Computer Setup—Security (continued)

Option	Description
	Lets you disable the cover sensor or configure what action is taken if the computer cover was removed. Default is 'Disabled'. NOTE: **Notify user** alerts the user with a POST error on the first boot after the sensor detects removal of the cover. If the password is set, **Administrator Password** requires that the password be entered to boot the computer if the sensor detects that the cover has been removed.
System Management Command	Allows authorized personnel to reset security settings during a service event. Default is enabled.
Restore Security Settings to Default	This action resets security devices, clears BIOS passwords (not including DriveLock), and restores settings in the **Security menu** to factory defaults.

Computer Setup—Advanced

NOTE: Support for specific Computer Setup options may vary depending on the hardware configuration.

Table 5-3 Computer Setup—Advanced (for advanced users)

Option	Heading
Display Language	Lets you select the language of the menus in F10 Setup and the keyboard layout.
Scheduled Power-On	This feature wakes the system up from a powered off state at a specified date and time.

Boot Options	Select the devices that the computer can boot from, as well as other options, including:
	
	• Startup Menu Delay(sec). Enabling this feature will add a user-specified delay to the POST process. One purpose for the delay is to provide additional time to activate hotkeys such as Esc for the Startup Menu or F10 for Computer Setup.
	• Fast Boot. Default is enabled.
	• CD-ROM Boot. Default is enabled.
	• Network (PXE) Boot. Default is enabled.
	• Prompt on Memory Size Change. Default is enabled.
	• Prompt on Fixed Storage Change. Default is disabled.
	• After Power Loss. Default is Power Off.
	  ■ Power off—causes the computer to remain powered off when power is restored.
	  ■ Power on—causes the computer to power on automatically as soon as power is restored.
	  ■ Previous state—causes the computer to power on automatically as soon as power is restored, if it was on when power was lost.
	
	NOTE: If the system is configured to 'Power On from Keyboard Ports' (see Power Management Options), then this setting is forced to 'Power On'.
	
	• Audio Alerts During Boot. Default is enabled. When disabled, most audible beeps from errors, warnings, and password prompts during boot up are suppressed.
	• UEFI Boot Order.
	
	Default is enabled. Specify the order in which UEFI boot sources (such as a internal hard drive, USB hard drive, USB optical drive, or internal optical drive) are checked for a bootable operating system image.
	
	UEFI boot sources always have precedence over legacy boot sources.
	
	• Legacy Boot Order

Table 5-3 Computer Setup—Advanced (for advanced users) (continued)

Option	Heading
	Specify the order in which legacy boot sources (such as a network interface card, internal hard drive, USB optical drive, or internal optical drive) are checked for a bootable operating system image. Specify the order of attached hard drives. The first hard drive in the order will have priority in the boot sequence and will be recognized as drive C (if any devices are attached). NOTE: To drag a device to a preferred place, press Enter. NOTE: MS-DOS drive lettering assignments may not apply after a non-MS-DOS operating system has started. **Shortcut to Temporarily Override Boot Order** To boot **one time** from a device other than the default device specified in Boot Order, restart the computer and press Esc (to access the Startup menu) and then F9 (Boot Menu), or only F9 (skipping the Startup menu) when the monitor light illuminates. After POST is completed, a list of bootable devices is displayed. Use the arrow keys to select the preferred bootable device and press Enter. The computer then boots from the selected non-default device for this one time.
Secure Boot Configuration	**Configure Legacy Support and Secure Boot** Legacy Support – Lets you turn off all legacy support on the computer, including booting to DOS, running legacy graphics cards, booting to legacy devices, and so on. Secure Boot – Lets you make sure an operating system is legitimate before booting to it, making your operating system resistant to malicious modification from preboot to full operating system booting, preventing firmware attacks. UEFI and Windows Secure Boot only allow code signed by pre-approved digital certificates to run during the firmware and operating system boot process. Default is 'Legacy Support Disable and Secure Boot Disable' for non-Windows configurations. Default is 'Legacy Support Disable and Secure Boot Enable' for Windows 10 and later configurations. **Secure Boot Key Management** Lets you manage the custom key settings. **Clear Secure Boot Keys** Lets you delete any previously loaded custom boot keys. Clearing keys will disable secure boot. Default is disabled. **Reset Secure Boot keys to factory defaults** Default is disabled. **Enable MS UEFI CA key** Disabling this setting alters the Secure Boot key list to further restrict the allowed software components. Set this option to 'disable' to support Device Guard.
System Options	**Configure Storage Controller for RAID** (enable/disable) Lets you enable onboard RAID. If the boot drive is an SED hard drive or solid-state drive, the default is AHCI. Otherwise, the default is enabled. **POST Prompt for RAID Configuration** When disabled, the prompt for 'RAID option ROM' in legacy mode is suppressed. **Virtualization Technology (VTx)** Controls the virtualization features of the processor. Changing this setting requires turning the computer off and then back on. Default is disabled. **Virtualization Technology for Directed I/O (VTd)** Controls virtualization DMA remapping features of the chipset. Changing this setting requires turning the computer off and then back on. Default is disabled. **PCI Express Slot x** (enable/disable)

Table 5-3 Computer Setup—Advanced (for advanced users) (continued)

Option	Heading
	Lets you disable individual expansion slots. **Allow PCIe/PCI SERR# Interrupt** (enable/disable) Allows PCI devices to report PCI/PCIe System Error signals, such as address parity errors, data parity errors, and critical errors other than parity. Default is enabled. **Power Button Override** (disable/4 sec/15 sec) Lets you disable or enable and select the number of seconds you have to hold down the power button for it to force the system to power off. Default is '4 sec'.
Built-In Device Options	**Embedded LAN Controller** Select to show the device in the operating system. Default is enabled. **Wake On LAN** Lets you either disable the Wake On LAN feature, or configure where the computer boots, including the network or hard drive. Default is Boot to Network. **Audio Device** Select to show the device in the operating system. Default is enabled. **Internal Speakers** (does not affect external speakers) Clear to disable the chassis speaker or speakers. This function is applicable to normal audio playback in the operating system and does not affect the error or warning beeps during POST. Default is enabled. **Increase PCIe Idle Fan Speed(%)** Sets idle fan speed percentage. This setting only changes the minimum fan speed. The fan is still automatically controlled.
Port Options	Allows you to hide the following ports from the operating system: • Serial port A • Serial port B • SATA0 thru SATA7 • eSATA0 • eSATA1 • Internal USB ports • Front USB ports • Rear USB ports • USB Type-C Controller(s) firmware version • Media card reader
Option ROM Launch Policy	These policies control whether Legacy Option ROMs or UEFI drivers are loaded. Default is 'All UEFI.' **Configure Option ROM Launch Policy** • All legacy • All UEFI • All UEFI except video
Mini OROM Display Policy	This policy controls whether optional ROM text appears in a small window on the splash screen until a key is pressed.

Table 5-3 Computer Setup—Advanced (for advanced users) (continued)

Option	Heading
Power Management Options	**Runtime Power Management** (enable/disable) Allows certain operating systems to reduce processor voltage and frequency when the current software load does not require the full capabilities of the processor. Default is enabled. **Extended Idle Power States** (enable/disable) Allows certain operating systems to decrease the processors power consumption when the processor is idle. Default is enabled. **Hardware Power States** (enable/disable) Enabling this feature controls whether computer or the operating system has final control over power states. **S5 Maximum Power Savings** (enable/disable) Enabling this feature reduces the power of the system to less than 0.5W when the system is in the S4 or S5 state. Power is removed from the expansion slots and one of the on-board network connections. The AMT-enabled network connection may be used to wake on LAN with this feature enabled. Default is disabled. **SATA Power Management** (enable/disable) Enables or disables SATA bus and/or device power management. Default is enabled. **PCI Express Power Management** (enable/disable) Enabling this option permits the PCI Express links to use Active Power State Management (ASPM) to enter lower power states while not in use. Default is enabled. **Unique Sleep State Blink Rates** (enable/disable) This feature is designed to provide a visual indication of what sleep state the system is in. Each sleep state has a unique blink pattern. Default is disabled. NOTE: A normal shutdown goes to the S4 state for Windows 8 or later. S0 (On) = Solid white LED. S3 (Stand By)= 3 blinks at 1Hz (50% duty cycle) followed by a pause of 2 seconds (white LED) — repeated cycles of 3 blinks and a pause. S4 (Hibernation)= 4 blinks at 1Hz (50% duty cycle) followed by a pause of 2 seconds (white LED) — repeated cycles of 4 blinks and a pause. S5 (Soft Off) = LED is off. **Power On from Keyboard Ports** (enable/disable) When enabled, this feature allows a key press to power on the system when it is off (S5 state). If using a USB keyboard, it must be plugged into one of the rear ports labeled with the keyboard icon. Default is disabled.
Remote Management Options	**Intel Management Engine (ME)** (enable/disable). Default is enabled. This option allows a user to disable the Intel Management Engine, which disables Intel Active Management Technology and all underlying Intel ME technologies. This option also disables ME functions that allow for ME firmware updates. It is suggested to periodically enable this option to update ME firmware, as the ME firmware may contain platform stability fixes. **Intel Active Management Technology (AMT)** (enable/disable). Default is disabled. This option allows a user to disable the Intel Active Management Technology, which is tied to all ME-regulated remote management functions. Disabling AMT will still allow for ME firmware updates, which are recommended for receiving platform stability fixes. **USB Key Provisioning Support** (enable/disable) Default is disabled. **USB Redirection Support** (enable/disable). Default is enabled.

Table 5-3 Computer Setup—Advanced (for advanced users) (continued)

Option	Heading
	USB redirection allows USB devices plugged into a client computer to be transparently redirected to the guest operating system. **Unconfigure AMT on next boot** (Do Not Apply/Apply). Default is 'Do Not Apply'. **SOL Terminal Emulation Mode** (ANSI / VT100). Default is ANSI. SOL terminal emulation mode is only activated during remote AMT redirection operations. The emulation options allow administrators to select which mode works best with their console. **Show Unconfigure ME Confirmation Prompt** (enable/disable). Default is enabled. **Verbose Boot Messages** (enable/disable). Default is enabled. Verbose boot shows additional logging information during the boot. mainly for debugging if something goes wrong during bootup. **Watchdog Timer** (enable/disable). Default is enabled. Allows you to set amount of time for a operating system and BIOS watchdog alert to be sent if the timers are not deactivated. BIOS watchdog is deactivated by BIOS and would indicate that a halt occurred during execution if the alert is sent to the management console. An operating system alert is deactivated by the operating system image and would indicate that a hang occurred during its initialization. • OS Watchdog Timer (min.) – (5/10/15/20/25). Default is 5 min. • BIOS Watchdog Timer (min.) – (5/10/15/20/25). Default is 5 min. **CIRA Timeout (min.)** (1/2/3/4/Never) CIRA is Customer Initiated Remote Assistance, an Intel service to help users employing Active Management Technology (AMT).

Recovering the Configuration Settings

This method of recovery requires that you first perform the **Save to Removable Media** command with the Computer Setup (F10) Utility before **Restore** is needed. (See Computer Setup–Main on page 39 in the Computer Setup—File table.)

The **Save to Removable Media** option creates a file named HPSETUP.TXT on an inserted USB flash media device. This file can be edited to change the settings on Restore. An asterisk (*) marks the selected option for a setting.

NOTE: It is recommended that you save any modified computer configuration settings to a USB flash media device and save the device for possible future use.

To restore the configuration, insert the USB flash media device with the saved configuration and perform the **Restore from Removable Media** command with the Computer Setup (F10) Utility. (See Computer Setup–Main on page 39 in the Computer Setup—File table.)

6 Troubleshooting without diagnostics

This chapter provides information on how to identify and correct minor problems, such as USB devices, hard drive, graphics, audio, memory, and software problems. If you encounter problems with the computer, refer to the tables in this chapter for probable causes and recommended solutions.

NOTE: For information on specific error messages that may appear on the screen during Power-On Self-Test (POST) at startup, refer to POST error messages and diagnostic front panel LEDs and audible codes on page 73.

Safety and comfort

WARNING! Misuse of the computer or failure to establish a safe and comfortable work environment may result in discomfort or serious injury. Refer to the *Safety & Comfort Guide* at http://www.hp.com/ergo for more information on choosing a workspace and creating a safe and comfortable work environment. For more information, refer to the *Safety & Regulatory Information* guide.

Before you call for technical support

If you are having problems with the computer, try the appropriate solutions below to try to isolate the exact problem before calling for technical support.

- Run the HP diagnostic tool.
- Run the hard drive self-test in Computer Setup. Refer to Computer Setup (F10) Utility on page 37 for more information.
- Check the Power LED on the front of the computer to see if it is flashing red. The flashing lights are error codes that will help you diagnose the problem. Refer to POST error messages and diagnostic front panel LEDs and audible codes on page 73 for more information.
- If the screen is blank, plug the monitor into a different video port on the computer if one is available. Or, replace the monitor with a monitor that you know is functioning properly.
- If you are working on a network, plug another computer with a different cable into the network connection. There may be a problem with the network plug or cable.
- If you recently added new hardware, remove the hardware and see if the computer functions properly.
- If you recently installed new software, uninstall the software and see if the computer functions properly.
- Boot the computer to the Safe Mode to see if it will boot without all of the drivers loaded. When booting the operating system, use “Last Known Configuration.”
- Refer to the comprehensive online technical support at http://www.hp.com/support.
- Refer to Helpful hints on page 49 in this guide.

To assist you in resolving problems online, HP Instant Support Professional Edition provides you with self-solve diagnostics. If you need to contact HP support, use HP Instant Support Professional Edition's online chat feature. Access HP Instant Support Professional Edition at: http://www.hp.com/go/ispe.

Access the Business Support Center (BSC) at http://www.hp.com/go/bizsupport for the latest online support information, software and drivers, proactive notification, and worldwide community of peers and HP experts.

If it becomes necessary to call for technical assistance, be prepared to do the following to ensure that your service call is handled properly:

- Be in front of your computer when you call.
- Write down the computer serial number, product ID number, and monitor serial number before calling.
- Spend time troubleshooting the problem with the service technician.
- Remove any hardware that was recently added to your system.
- Remove any software that was recently installed.
- Restore the system from the Recovery Disc Set that you created or restore the system to its original factory condition in System Software Requirement Disks (SSRD).

⚠ CAUTION: Restoring the system will erase all data on the hard drive. Be sure to back up all data files before running the restore process.

NOTE: For sales information and warranty upgrades (Care Packs), call your local authorized service provider or dealer.

Helpful hints

If you encounter problems with the computer, monitor, or software, see the following list of general suggestions before taking further action:

- Check that the computer and monitor are plugged into a working electrical outlet.
- Check that the computer is turned on and the white power light is on.
- Check that the monitor is turned on and the monitor light is on.
- Check the Power LED on the front of the computer to see if it is flashing red. The flashing lights are error codes that will help you diagnose the problem. Refer to POST error messages and diagnostic front panel LEDs and audible codes on page 73 for more information.
- Turn up the brightness and contrast controls of the monitor if the monitor is dim.
- Press and hold any key. If the system beeps, then the keyboard should be operating correctly.
- Check all cable connections for loose connections or incorrect connections.
- Wake the computer by pressing any key on the keyboard or pressing the power button. If the system remains in suspend mode, shut down the computer by pressing and holding the power button for at least four seconds then press the power button again to restart the computer. If the system will not shut down, unplug the power cord, wait a few seconds, then plug it in again. The computer will restart if it is set to power on automatically as soon as power is restored in Computer Setup. If it does not restart, press the power button to start the computer.
- Reconfigure the computer after installing a non-plug and play expansion board or other option. See Solving hardware installation problems on page 65 for instructions.
- Be sure that all the needed device drivers have been installed. For example, if you are using a printer, you need a driver for that model printer.
- Remove all bootable media (CD/DVD or USB device) from the system before turning it on.

- If you have installed an operating system other than the factory-installed operating system, check to be sure that it is supported on the system.
- If the system has multiple video sources installed (embedded video on some models only) and a single monitor, the monitor must be plugged into the monitor connector on the source selected as the primary VGA adapter. During boot, the other monitor connectors are disabled and if the monitor is connected into these ports, the monitor will not function. You can select which source will be the default VGA source in Computer Setup.

⚠ CAUTION: When the computer is plugged into an AC power source, there is always voltage applied to the system board. You must disconnect the power cord from the power source before opening the computer to prevent system board or component damage.

Solving general problems

You may be able to easily resolve the general problems described in this section. If a problem persists and you are unable to resolve it yourself or if you feel uncomfortable about performing the operation, contact an authorized dealer or reseller.

⚠ WARNING! When the computer is plugged into an AC power source, voltage is always applied to the system board. To reduce the risk of personal injury from electrical shock and/or hot surfaces, be sure to disconnect the power cord from the wall outlet and allow the internal system components to cool before touching.

Cannot access the Computer Setup (F10) Utility when booting the computer.

Cause	Solution
The Computer Setup (F10) Utility is set to “fast boot” causing the F10 access screen to display too briefly when booting the computer.	Before turning on the computer, press and hold F10. Turn on the computer and continue to hold F10 until the Computer Setup (F10) Utility is displayed. - or – Follow the Windows instructions for rebooting the computer into the Computer Setup (F10) Utility.

Computer appears locked up and will not turn off when the power button is pressed.

Cause	Solution
Software control of the power switch is not functional.	1. Press and hold the power button for at least four seconds until the computer turns off. 2. Disconnect the power cord from the electrical outlet.

Computer will not respond to keyboard or mouse.

Cause	Solution
Computer is in Sleep state.	To resume from Sleep state, press the power button. CAUTION: When attempting to resume from Sleep state, do not hold down the power button for more than four seconds. Otherwise, the computer will shut down and you will lose any unsaved data.
System has locked up.	Restart computer.

Computer date and time display is incorrect.

Cause	Solution
RTC (real-time clock) battery may need to be replaced. NOTE: Connecting the computer to a live AC outlet prolongs the life of the RTC battery.	Reset the date and time under **Control Panel** (Computer Setup can also be used to update the RTC date and time). If the problem persists, replace the RTC battery. See the Removal and Replacement section for instructions on installing a new battery, or contact an authorized dealer or reseller for RTC battery replacement. To access Control Panel, type `control panel` in the taskbar search box, and then select Control Panel.

There is no sound or sound volume is too low.

Cause	Solution
System volume may be set low or muted.	1. Check the Computer Setup settings to make sure the internal system speaker is not muted (this setting does not affect the external speakers). 2. Make sure the external speakers are properly connected and powered on and that the speakers' volume control is set correctly. 3. Use the system volume control available in the operating system to make sure the speakers are not muted or to increase the volume.

Cannot remove computer cover or access panel.

Cause	Solution
Smart Cover Lock, featured on some computers, is locked.	Unlock the Smart Cover Lock using Computer Setup. In case of forgotten password, power loss, or computer malfunction, you must manually disable the Smart Cover lock . A key to unlock the Smart Cover Lock is not available from HP. Keys are typically available from a hardware store.

Poor performance.

Cause	Solution
Processor is too hot.	1. Make sure airflow to the computer is not blocked. Leave a 10.2-cm (4-inch) clearance on all vented sides of the computer and above the monitor to permit the required airflow. 2. Make sure fans are connected and working properly (some fans only operate when needed). 3. Make sure the processor heat sink is installed properly.
Hard drive is full.	Transfer data from the hard drive to create more space on the hard drive.
Low on memory.	Add more memory.

Poor performance.

Cause	Solution
Hard drive fragmented.	Defragment hard drive.
Program previously accessed did not release reserved memory back to the system.	Restart the computer.
Virus resident on the hard drive.	Run virus protection program.
Too many applications running.	1. Close unnecessary applications to free up memory. 2. Add more memory. 3. Some applications run in the background and can be closed by right-clicking on their corresponding icons in the task tray. To prevent these applications from launching at startup: a. Type `msconfig` in the taskbar search box, and then select **msconfig**. b. On the **Startup** tab of the System Configuration Utility, click **Open Task Manager**. c. Select applications that you do not want to launch automatically, and the click **Disable**.
Some software applications, especially games, are stressful on the graphics subsystem.	1. Lower the display resolution for the current application or consult the documentation that came with the application for suggestions on how to improve performance by adjusting parameters in the application. 2. Add more memory. 3. Upgrade the graphics solution.
Cause unknown.	Restart the computer.

Computer powered off automatically and the Power LED flashes red four times and then white two times.

Cause	Solution
Processor thermal protection activated: A fan may be blocked or not turning. OR The heat sink is not properly attached to the processor.	1. Ensure that the computer air vents are not blocked and the processor cooling fan is running. 2. Open the access panel, press the power button, and see if the processor fan (or other rear fan) spins. If the fan does not spin, make sure the fan cable is plugged onto the system board header. 3. If a fan is connected and not operating, replace it.

System does not power on and the LEDs on the front of the computer are not flashing.

Cause	Solution
System unable to power on.	Press and hold the power button for less than 4 seconds. If the hard drive LED turns white, then: Press and hold the power button for less than 4 seconds. If the hard drive LED does not turn on white then: 1. Check that the unit is plugged into a working AC outlet.

System does not power on and the LEDs on the front of the computer are not flashing.

Cause	Solution
	2. Open the access panel and check that the power button cable is properly connected to the system board. 3. Check that the power supply cables are properly connected to the system board. 4. Replace the system board.

Solving power problems

Common causes and solutions for power problems are listed in the following table.

Power supply shuts down intermittently.

Cause	Solution
Power supply will not turn on because of internal power supply fault.	Replace the power supply.

Computer powered off automatically and the power light flashes red two times, once every second, followed by a two second pause, and the computer beeps two times. (Beeps stop after fifth iteration but LEDs continue flashing.) Computer powered off automatically and the power light flashes red four times and then white two times.

Cause	Solution
Processor thermal protection activated. A fan may be blocked or not turning.	1. Ensure that the computer air vents are not blocked and the processor cooling fan (or other system fan) is running. 2. Remove the access panel and interior covers. 3. Press the power button, and see if the processor fan (or other system fans) spins. 4. If the fan(s) does not spin, make sure the fan cable(s) is plugged onto the system board. 5. If fan cable(s) is plugged in and the fan is not spinning, replace the fan.

Solving hard drive problems

Hard drive error occurs.

Cause	Solution
Hard disk has bad sectors or has failed.	1. Type `file` in the taskbar search box, and then select **File Explorer** from the list of applications. In the left column, expand **This PC**, right-click on a drive, select **Properties**, and then select the **Tools** tab. Under **Error checking** click **Check**. 2. Use a utility to locate and block usage of bad sectors. If necessary, reformat the hard disk.

Disk transaction problem.

Cause	Solution
Either the directory structure is bad or there is a problem with a file.	Type `file` in the taskbar search box, and then select **File Explorer** from the list of applications. In the left column, expand **This PC**, right-click on a drive, select **Properties**, and then select the **Tools** tab. Under **Error checking** click **Check**.

Drive not found (identified).

Cause	Solution
Cable could be loose.	Check cable connections.
The system may not have automatically recognized a newly installed device.	See reconfiguration directions in the Solving hardware installation problems on page 65 section. If the system still does not recognize the new device, check to see if the device is listed within Computer Setup. If it is listed, the probable cause is a driver problem. If it is not listed, the probable cause is a hardware problem. If this is a newly installed drive, run the Computer Setup utility and try adding a POST delay under **Advanced** > **Boot Options**.
The device is attached to a SATA port that has been hidden in Computer Setup.	Run the Computer Setup utility and ensure **Device Available** is selected for the device's SATA port in **Advanced** > **Port Options**.
Drive responds slowly immediately after power-up.	Run Computer Setup and increase the POST Delay in **Advanced** > **Boot Options**.

Nonsystem disk/NTLDR missing message.

Cause	Solution
The system is trying to start from the hard drive but the hard drive may have been damaged.	▲ Perform Drive Protection System (DPS) testing in system ROM.
System files missing or not properly installed.	1. Insert bootable media and restart the computer. 2. Boot to the windows installation media and select the recovery option. If only a restore kit is available, then select the **File Backup Program** option, and then restore the system. 3. Install system files for the appropriate operating system.
Hard drive boot has been disabled in Computer Setup.	Run the Computer Setup utility and enable the hard drive entry in the **Advanced** > **Boot Options** list.
Bootable hard drive is not attached as first in a multi-hard drive configuration.	If attempting to boot from a hard drive, ensure it is attached to the system board dark blue SATA connector.
Bootable hard drive is not listed first in the Boot Order.	Run the Computer Setup utility and select **Advanced** > **Boot Options** and ensure the bootable hard drive is listed immediately under the **Hard Drive** entry.

Computer will not boot from hard drive.

Cause	Solution
The device is attached to a SATA port that has been hidden in Computer Setup.	1. Check SATA cable connections. 2. Run the Computer Setup utility and ensure **Device Available** is selected for the device's SATA port in **Advanced** > **Port Options**.
Boot order is not correct.	Run the Computer Setup utility and change boot sequence in **Advanced** > **Boot Options**.
Hard drive is damaged.	Observe if the front panel Power LED is blinking RED and if any beeps are heard. See POST error messages and diagnostic front panel LEDs and audible codes on page 73 to determine possible causes for the blinking red and beep codes. See the Worldwide Limited Warranty for terms and conditions.

Computer seems to be locked up.

Cause	Solution
Program in use has stopped responding to commands.	1. Use the task manager to close programs that do not respond. 2. Attempt the normal Windows "Shut Down" procedure. If this fails, press the power button for four or more seconds to turn off the power. To restart the computer, press the power button again.

Solving media card reader problems

Media card will not work in a digital camera after formatting it in Windows.

Cause	Solution
By default, Windows will format any media card with a capacity greater than 32MB with the FAT32 format. Some digital cameras use the FAT (FAT16 & FAT12) format and can not operate with a FAT32 formatted card.	Either format the media card in the digital camera or select FAT file system to format the media card in a computer with Windows.

A write-protected or locked error occurs when attempting to write to the media card.

Cause	Solution
Media card is locked. Locking the media card is a safety feature that prevents writing to and deleting from an SD/Memory Stick/PRO card.	If using an SD card, make sure that the lock tab located on the right of the SD card is not in the locked position. If using a Memory Stick/PRO card, make sure that the lock tab located on the bottom of the Memory Stick/PRO card is not in the locked position.

Can not write to the media card.

Cause	Solution
The media card is a read-only memory (ROM) card.	Check the manufacturer's documentation included with your card to see if it writable. Refer to the previous section for a list of compatible cards.
Media card is locked. Locking the media card is a safety feature that prevents writing to and deleting from an SD/Memory Stick/PRO card.	If using an SD card, make sure that the lock tab located on the right of the SD card is not in the locked position. If using a Memory Stick/PRO card, make sure that the lock tab located on the bottom of the Memory Stick/PRO card is not in the locked position.

Unable to access data on the media card after inserting it into a slot.

Cause	Solution
The media card is not inserted properly, is inserted in the wrong slot, or is not supported.	Ensure that the card is inserted properly with the gold contact on the correct side. The green LED will light if inserted properly.

Do not know how to remove a media card correctly.

Cause	Solution
The computer's software is used to safely eject the card.	Type `file` in the taskbar search box, and then select **File Explorer** from the list of applications. In the left column, expand **This PC**, right-click on the corresponding drive icon, and then select **Eject**. Pull the card out of the slot. NOTE: Never remove the card when the green LED is flashing

After installing the media card reader and booting to Windows, the reader and the inserted cards are not recognized by the computer.

Cause	Solution
The operating system needs time to recognize the device if the reader was just installed into the computer and you are turning the PC on for the first time.	Wait a few seconds so that the operating system can recognize the reader and the available ports, and then recognize the media inserted in the reader.

After inserting a media card in the reader, the computer attempts to boot from the media card.

Cause	Solution
The inserted media card has boot capability.	1. If you do not want to boot from the media card, remove it during boot or do not select the option to boot from the inserted media card during the boot process. 2. During POST (Power On Self-Test), press F9 to modify the boot menu. 3. Change the boot sequence in F10 Computer Setup.

Solving display problems

If you encounter display problems, see the documentation that came with the monitor and to the common causes and solutions listed in the following table.

Blank screen (no video).

Cause	Solution
Monitor is not turned on and the monitor light is not on.	Turn on the monitor and check that the monitor light is on.
Bad monitor.	Try a different monitor.
The cable connections are not correct.	Check the cable connection from the monitor to the computer and to the electrical outlet.
You may have a screen blanking utility installed or energy saver features are enabled.	Press any key or click the mouse button and type your password (if set).
System ROM is corrupted; system is running in Boot Block Emergency Recovery Mode (indicated by eight beeps).	Reflash the system ROM with the latest BIOS image.
You are using a fixed-sync monitor and it will not sync at the resolution chosen.	Be sure that the monitor can accept the same horizontal scan rate as the resolution chosen.
Computer is in Sleep state.	Press the power button to resume from Sleep state. CAUTION: When attempting to resume from Sleep state, do not hold down the power button for more than four seconds. Otherwise, the computer will shut down and you will lose any unsaved data.
Monitor cable is plugged into the wrong connector.	Systems may have a monitor connection on both the motherboard or an add-in card. Try moving the monitor connection to a different connector on the back of the computer
Monitor settings in the computer are not compatible with the monitor.	1. In Control Panel, select **Category** from the **View by** list, then under **Appearance and Personalization**, select **Adjust screen resolution**. To access Control Panel, type `control panel` in the taskbar search box, and then select **Control Panel** from the list of applications. 2. Expand the **Resolution** box, and then use the sliding control to reset the resolution.
Monitor is configured to use an input that is not active.	Use the monitor's on-screen menu controls to select the input that is being driven by the system. Refer to the monitor's user documentation for more information on the on-screen controls and settings.

Blank screen and the power LED flashes Red five times, once every second, followed by a two second pause, and the computer beeps five times. (Beeps stop after fifth iteration but LEDs continue flashing.)

Cause	Solution
Pre-video memory error.	1. Reseat DIMMs. Power on the system. 2. Replace DIMMs one at a time to isolate the faulty module. 3. Replace third-party memory with HP memory. 4. Replace the system board.

Blank screen and the power LED flashes Red six times, once every second, followed by a two second pause, and the computer beeps six times. (Beeps stop after fifth iteration but LEDs continue flashing.)

Cause	Solution
Pre-video graphics error.	1. Reseat the graphics card. Power on the system. 2. Replace the graphics card. 3. Replace the system board.

Blank screen and the power LED flashes Red seven times, once every second, followed by a two second pause, and the computer beeps seven times. (Beeps stop after fifth iteration but LEDs continue flashing.)

Cause	Solution
System board failure (ROM detected failure prior to video).	Replace the system board.

Monitor does not function properly when used with energy saver features.

Cause	Solution
Monitor without energy saver capabilities is being used with energy saver features enabled.	Disable monitor energy saver feature.

Dim characters.

Cause	Solution
The brightness and contrast controls are not set properly.	Adjust the monitor brightness and contrast controls.

Blurry video or requested resolution cannot be set.

Cause	Solution
If the graphics controller was upgraded, the correct graphics drivers may not be loaded.	Download the latest graphics drivers from hp.com.
Monitor is not capable of displaying requested resolution.	Change requested resolution.
Graphics card is bad.	Replace the graphics card.

The picture is broken up, rolls, jitters, or flashes.

Cause	Solution
The monitor connections may be incomplete or the monitor may be incorrectly adjusted.	1. Be sure the monitor cable is securely connected to the computer. 2. In a two-monitor system or if another monitor is in close proximity, be sure the monitors are not interfering with each other's electromagnetic field by moving them apart.

The picture is broken up, rolls, jitters, or flashes.

Cause	Solution
	3. Fluorescent lights or fans may be too close to the monitor.
Monitor needs to be degaussed.	Degauss the monitor. Refer to the documentation that came with the monitor for instructions.

Image is not centered.

Cause	Solution
Position may need adjustment.	Press the monitor's Menu button to access the OSD menu. Select **ImageControl/ Horizontal Position** or **Vertical Position** to adjust the horizontal or vertical position of the image.

"No Connection, Check Signal Cable" displays on screen.

Cause	Solution
Monitor video cable is disconnected.	Connect the video cable between the monitor and computer. CAUTION: Ensure that the computer power is off while connecting the video cable.

"Out of Range" displays on screen.

Cause	Solution
Video resolution and refresh rate are set higher than what the monitor supports.	Restart the computer and enter Safe Mode. Change the settings to a supported setting then restart the computer so that the new settings take effect. To enter Safe Mode: 1. Log into the computer using an Administrator account. 2. Type `msconfig` in the taskbar search box, and then select **msconfig** from the list of applications. 3. Click the **Boot** tab, select **Safe boot** and then click **OK**.

High pitched noise coming from inside a flat panel monitor.

Cause	Solution
Brightness and/or contrast settings are too high.	Lower brightness and/or contrast settings.

Fuzzy focus; streaking, ghosting, or shadowing effects; horizontal scrolling lines; faint vertical bars; or unable to center the picture on the screen (flat panel monitors using an analog VGA input connection only).

Cause	Solution
Flat panel monitor's internal digital conversion circuits may be unable to correctly interpret the output synchronization of the graphics card.	1. Select the monitor's Auto-Adjustment option in the monitor's on-screen display menu. 2. Manually synchronize the Clock and Clock Phase on-screen display functions. To download a SoftPaq that will assist you with the synchronization, go to the following Web site, select the appropriate monitor, and download either SP32347 or SP32202: http://www.hp.com/support
Graphics card is not seated properly or is bad (some models).	1. Reseat the graphics card. 2. Replace the graphics card.

Certain typed symbols do not appear correct.

Cause	Solution
The font you are using does not support that particular symbol.	Use the Character Map to locate and select the appropriate symbol. You can copy the symbol from the Character Map into a document. Type `ch` in the taskbar search box, and then select **Character Map** from the list of applications.

Solving audio problems

If the computer has audio features and you encounter audio problems, see the common causes and solutions listed in the following table.

Sound cuts in and out.

Cause	Solution
Processor resources are being used by other open applications.	Shut down all open processor-intensive applications.

Sound does not come out of the speaker or headphones.

Cause	Solution
Software volume control is turned down or muted.	Double-click the **Speaker** icon on the taskbar, then make sure that **Mute** is not selected and use the volume slider to adjust the volume.
Audio is hidden in Computer Setup.	Enable the audio in Computer Setup: **Advanced** > **Built-in Device Options**.
The external speakers are not turned on.	Turn on the external speakers.
The audio device may be connected to the wrong jack.	Ensure that the device is connected to the correct jack on the computer. The rear audio jack output is the green receptacle. The speakers should be plugged into the line-out jack and the headphones should be plugged into the headphone jack.

Sound does not come out of the speaker or headphones.

Cause	Solution
External speakers plugged into the wrong audio jack on a recently installed sound card.	See the sound card documentation for proper speaker connection. The rear audio jack output is the green receptacle.
Headphones or devices connected to the line-out connector mute the internal speaker.	Turn on and use headphones or external speakers, if connected, or disconnect headphones or external speakers.
Computer is in Sleep state.	Press the power button to resume from Sleep state. CAUTION: When attempting to resume from Sleep state, do not hold down the power button for more than four seconds. Otherwise, the computer will shut down and you will lose any unsaved data.
Internal speaker is disabled in Computer Setup.	Enable the internal speaker in Computer Setup. Select **Advanced** > **Built-in Device Options**.
The application is set to use a different audio device than speakers.	Some graphics cards support audio over the DisplayPort connection (if applicable), so multiple audio devices may be listed in Device Manager. Make sure the correct device is being used. To access Device Manager, type `device manager` in the taskbar search box, and then select **Device Manager** from the list of applications.
Some applications can select which audio output device is used.	Make sure the application has selected the correct audio device.
The operating system controls may be set to use a different audio device as the default output device than what is expected.	Set the operating system to use the correct audio device.

Computer appears to be locked up while recording audio.

Cause	Solution
The hard disk may be full.	Before recording, make sure there is enough free space on the hard disk. You can also try recording the audio file in a compressed format.

Line-in jack is not functioning properly.

Cause	Solution
Jack has been reconfigured in the audio driver or application software.	In the audio driver or application software, reconfigure the jack or set the jack to its default value.

There is no sound or very weak sound is detected by the headset microphone.

Cause	Solution
The incorrect style of headset is being used.	The front headset jack supports only Cellular Telephone Industries Association (CTIA) style headsets. Open Mobile Terminal Platform (OMTP) style headsets are not supported. These styles of headsets differ by the way that the microphone signals are oriented on the connector. To solve the issue, use a CTIA style headset or a commercially available adapter that will convert from OMTP to CTIA signaling.

There is no sound or sound volume is too low.

Cause	Solution
The application is set to use a different audio device than speakers.	Some graphics cards support audio over the DisplayPort connection (if applicable), so multiple audio devices may be listed in Device Manager. Make sure the correct device is being used. To access Device Manager, type `device manager` in the taskbar search box, and then select **Device Manager** from the list of applications.
Some applications can select which audio output device is used.	Make sure the application has selected the correct audio device.
The operating system controls may be set to use a different audio device as the default output device than what is expected.	Set the operating system to use the correct audio device.

Solving printer problems

If you encounter printer problems, see the documentation that came with the printer and to the common causes and solutions listed in the following table.

Printer will not print.

Cause	Solution
Printer is not turned on and online.	Turn the printer on and make sure it is online.
The correct printer drivers for the application are not installed.	1. Install the correct printer driver for the application. 2. Try printing using the MS-DOS command: `DIR C:\ > [printer port]` where `[printer port]` is the address of the printer being used. If the printer works, reload the printer driver. To run MS-DOS commands, press the Windows key + r, type `cmd` in the **Open** box, and then click **OK**.
If you are on a network, you may not have made the connection to the printer.	Make the proper network connections to the printer.
Printer may have failed.	Run printer self-test.

Printer will not turn on.

Cause	Solution
The cables may not be connected properly.	Reconnect all cables and check the power cord and electrical outlet.

Printer prints garbled information.

Cause	Solution
The correct printer driver for the application is not installed.	Install the correct printer driver for the application.

Printer prints garbled information.

Cause	Solution
The cables may not be connected properly.	Reconnect all cables.
Printer memory may be overloaded.	Reset the printer by turning it off for one minute, then turn it back on.

Printer will not print.

Cause	Solution
The printer may be out of paper.	Check the paper tray and refill it if it is empty.

Solving keyboard and mouse problems

If you encounter keyboard or mouse problems, see the documentation that came with the equipment and to the common causes and solutions listed in the following table.

A wireless keyboard/mouse is not working correctly. Symptoms include lagging mouse movement, jumpy mouse/keyboard, or no function of mouse/keyboard and external drive.

Cause	Solution
If your computer is equipped with USB 3.0 ports, connected USB 3.0 devices can interfere with the wireless keyboard USB receiver.	Connect the wireless keyboard USB receiver to a USB 2.0 port that is separated from ports with USB 3.0 devices. If you still experience interference, you may have to place the connectors farther apart using an external USB hub.

Keyboard commands and typing are not recognized by the computer.

Cause	Solution
Keyboard connector is not properly connected.	Shut down the computer, reconnect the keyboard to the back of the computer, and then restart the computer.
Program in use has stopped responding to commands.	Shut down your computer using the mouse and then restart the computer.
Keyboard needs repairs.	See the Worldwide Limited Warranty for terms and conditions.
Computer is in Sleep state.	Press the power button to resume from Sleep state. CAUTION: When attempting to resume from Sleep date, do not hold down the power button for more than four seconds. Otherwise, the computer will shut down and you will lose any unsaved data.

Mouse does not respond to movement or is too slow.

Cause	Solution
Mouse connector is not properly plugged into the back of the computer.	Shut down the computer using the keyboard. 1. Press the Ctrl and Esc keys at the same time (or press the Windows logo key) to display the **Start** menu. 2. Use the arrow keys to scroll to and select the power icon at the top right on the menu, and then press Enter. 3. Use the arrow keys to select **Shut Down**, and then press Enter. 4. After the shutdown is complete, plug the mouse connector into the back of the computer (or the keyboard) and restart.
Program in use has stopped responding to commands.	Shut down the computer using the keyboard then restart the computer.
Mouse may need repair.	See the Worldwide Limited Warranty for terms and conditions.
Computer is in Sleep state.	Press the power button to resume from Sleep state. CAUTION: When attempting to resume from Sleep state, do not hold down the power button for more than four seconds. Otherwise, the computer will shut down and you will lose any unsaved data.

Solving hardware installation problems

You may need to reconfigure the computer when you add or remove hardware, such as an additional drive or expansion card. If you install a plug and play device, Windows automatically recognizes the device and configures the computer. If you install a non-plug and play device, you must reconfigure the computer after completing installation of the new hardware. In Windows, use the **Add Hardware Wizard** and follow the instructions that appear on the screen.

To open the Add Hardware Wizard, open a Command Prompt and open hdwwiz.exe.

⚠ WARNING! When the computer is plugged into an AC power source, voltage is always applied to the system board. To reduce the risk of personal injury from electrical shock and/or hot surfaces, be sure to disconnect the power cord from the wall outlet and allow the internal system components to cool before touching.

Table 6-1 Solving hardware installation problems

A new device is not recognized as part of the system.

Cause	Solution
Device is not seated or connected properly.	Ensure that the device is properly and securely connected and that pins in the connector are not bent down.
Cable(s) of new external device are loose or power cables are unplugged.	Ensure that all cables are properly and securely connected and that pins in the cable or connector are not bent down.
Power switch of new external device is not turned on.	Turn off the computer, turn on the external device, then turn on the computer to integrate the device with the computer system.
When the system advised you of changes to the configuration, you did not accept them.	Reboot the computer and follow the instructions for accepting the changes.
A plug and play board may not automatically configure when added if the default configuration conflicts with other devices.	Use Windows Device Manager to deselect the automatic settings for the board and choose a basic configuration that does not cause a resource conflict. You can also use Computer Setup to reconfigure or disable devices to resolve the resource conflict. Type `device manager` in the taskbar search box, and then select **Device Manager** from the list of applications.
USB ports on the computer are disabled in Computer Setup.	Run the Computer Setup utility and ensure that **Device available** is selected for appropriate USB ports under **Advanced** > **Port Options**.

Computer will not start.

Cause	Solution
Wrong memory modules were used in the upgrade or memory modules were installed in the wrong location.	1. Review the documentation that came with the system to determine if you are using the correct memory modules and to verify the proper installation. NOTE: DIMM1 or XMM1 must always be installed. DIMM1 must be installed before DIMM2, and DIMM3 must be installed before DIMM4. 2. Observe the beeps and LED lights on the front of the computer. Beeps and flashing LEDs are codes for specific problems. 3. If you still cannot resolve the issue, contact Customer Support.

Power LED flashes Red three times and then white two times.

Cause	Solution
Memory is installed incorrectly or is bad.	CAUTION: To avoid damage to the DIMMs or the system board, you must unplug the computer power cord before attempting to reseat, install, or remove a DIMM module. 1. Reseat DIMMs. Power on the system. 2. Replace DIMMs one at a time to isolate the faulty module. NOTE: DIMM1 or XMM1 must always be installed. DIMM1 must be installed before DIMM2, and DIMM3 must be installed before DIMM4 3. Replace third-party memory with HP memory. 4. Replace the system board.

Solving network problems

Some common causes and solutions for network problems are listed in the following table. These guidelines do not discuss the process of debugging the network cabling.

Table 6-2 Solving network problems

Network driver does not detect network controller.

Cause	Solution
Network controller is disabled.	1. Run Computer Setup and enable network controller. 2. Enable the network controller in the operating system using Device Manager. Type `device manager` in the taskbar search box, and then select **Device Manager** from the list of applications.
Incorrect network driver.	Check the network controller documentation for the correct driver or obtain the latest driver from the manufacturer's Web site.

Network status link light never flashes.

NOTE: **The network status light is supposed to flash when there is network activity.**

Cause	Solution
No active network is detected.	Check cabling and network equipment for proper connection.
Network controller is not set up properly.	Check for the device status within Windows, such as Device Manager for driver load and the Network Connections applet within Windows for link status. Type `device manager` in the taskbar search box, and then select **Device Manager** from the list of applications.
Network controller is disabled.	1. Run Computer Setup and enable network controller. 2. Enable the network controller in the operating system using Device Manager.

Table 6-2 Solving network problems (continued)

Network status link light never flashes.

NOTE: **The network status link light is supposed to flash when there is network activity.**

Cause	Solution
	Type `device manager` in the taskbar search box, and then select **Device Manager** from the list of applications.
Network driver is not properly loaded.	Reinstall network drivers.
System cannot autosense the network.	Disable auto-sensing capabilities and force the system into the correct operating mode.

Diagnostics reports a failure.

Cause	Solution
The cable is not securely connected.	Ensure that the cable is securely attached to the network connector and that the other end of the cable is securely attached to the correct device.
The cable is attached to the incorrect connector.	Ensure that the cable is attached to the correct connector.
There is a problem with the cable or a device at the other end of the cable.	Ensure that the cable and device at the other end are operating correctly.
The network controller is defective.	Contact an authorized service provider.

Diagnostics passes, but the computer does not communicate with the network.

Cause	Solution
Network drivers are not loaded, or driver parameters do not match current configuration.	Make sure the network drivers are loaded and that the driver parameters match the configuration of the network controller. Make sure the correct network client and protocol is installed.
The network controller is not configured for this computer.	Select the **Network and Sharing Center** icon in the **Control Panel** and configure the network controller. Type `control panel` in the taskbar search box, and then select **Control Panel** from the list of applications.

Network controller stopped working when an expansion board was added to the computer.

Cause	Solution
The network controller requires drivers.	Verify that the drivers were not accidentally deleted when the drivers for a new expansion board were installed.

Network controller stops working without apparent cause.

Cause	Solution
The files containing the network drivers are corrupted.	Reinstall the network drivers using the Windows recovery tools.

Table 6-2 Solving network problems (continued)

Network controller stops working without apparent cause.

Cause	Solution
	If necessary, download the softpaq from the web (from a different computer).
The cable is not securely connected.	Ensure that the cable is securely attached to the network connector and that the other end of the cable is securely attached to the correct device.
The network controller is defective.	Contact an authorized service provider.

New network card will not boot.

Cause	Solution
New network card may be defective or may not meet industry-standard specifications.	Install a working, industry-standard NIC, or change the boot sequence to boot from another source.

Cannot connect to network server when attempting Remote System Installation.

Cause	Solution
The network controller is not configured properly.	Verify Network Connectivity, that a DHCP Server is present, and that the Remote System Installation Server contains the NIC drivers for your NIC.

System setup utility reports unprogrammed EEPROM.

Cause	Solution
Unprogrammed EEPROM.	Contact an authorized service provider.

Solving memory problems

If you encounter memory problems, some common causes and solutions are listed in the following table.

⚠ CAUTION: Power may still be supplied to the DIMMs when the computer is turned off (depending on the Management Engine (ME) settings). To avoid damage to the DIMMs or the system board, you must unplug the computer power cord before attempting to reseat, install, or remove a memory module.

For those systems that support ECC memory, HP does not support mixing ECC and non-ECC memory. Otherwise, the computer will not boot the operating system.

NOTE: The memory count will be affected by configurations with the Management Engine (ME) enabled. The ME uses 8MB of system memory in single channel mode or 16MB of memory in dual-channel mode to download, decompress, and execute the ME firmware for Out-of-Band (OOB), third-party data storage, and other management functions.

System will not boot or does not function properly after installing additional memory modules.

Cause	Solution
A memory module is not installed in the DIMM1 or XMM1 socket.	Ensure that a memory module is installed in the DIMM1 or XMM1 socket on the system board. This socket must be populated with a memory module.
Memory module is not the correct type or speed grade for the system or the new memory module is not seated properly.	Replace module with the correct industry-standard device for the computer. On some models, ECC and non-ECC memory modules cannot be mixed.

Out of memory error.

Cause	Solution
You have run out of memory to run the application.	Check the application documentation to determine the memory requirements.

Memory count during POST is wrong.

Cause	Solution
The memory modules may not be installed correctly.	Check that the memory modules have been installed correctly and that proper modules are used.

Insufficient memory error during operation.

Cause	Solution
Too many Terminate and Stay Resident programs (TSRs) are installed.	Delete any TSRs that you do not need.
You have run out of memory for the application.	Check the memory requirements for the application or add more memory to the computer.

Power LED flashes Red five times, once every second, followed by a two second pause, and the computer beeps five times. (Beeps stop after fifth iteration but LEDs continue flashing.)

Cause	Solution
Memory is installed incorrectly or is bad.	1. Reseat DIMMs. Power on the system. 2. Replace DIMMs one at a time to isolate the faulty module. 3. Replace third-party memory with HP memory. 4. Replace the system board.

Solving USB flash drive problems

If you encounter USB flash drive problems, common causes and solutions are listed in the following table.

USB flash drive is not seen as a drive letter in Windows.

Cause	Solution
The drive letter after the last physical drive is not available.	Change the default drive letter for the flash drive in Windows.

USB flash drive not found (identified).

Cause	Solution
The device is attached to a USB port that has been hidden in Computer Setup.	Run the Computer Setup utility and enable USB ports in **Advanced** > **Port Options**.

System will not boot from USB flash drive.

Cause	Solution
Boot order is not correct.	Run the Computer Setup utility and change boot sequence in **Advanced** > **Boot Options**.
Removable Media Boot is disabled in the Computer Setup utility.	Run the Computer Setup utility and enable booting to removable media in **Advanced** > **Boot Options**. Ensure USB is enabled in **Storage** > **Boot Order**.

The computer boots to DOS after making a bootable flash drive.

Cause	Solution
Flash drive is bootable.	Install the flash drive only after the operating system boots.

Solving front panel component problems

If you encounter problems with devices connected to the front panel, refer to the common causes and solutions listed in the following table.

A USB device, headphone, or microphone is not recognized by the computer.

Cause	Solution
Device is not properly connected.	1. Turn off the computer. 2. Reconnect the device to the front of the computer and restart the computer.
The device does not have power.	If the USB device requires AC power, be sure one end is connected to the device and one end is connected to a live outlet.
The correct device driver is not installed.	1. Install the correct driver for the device. 2. You might need to reboot the computer.

A USB device, headphone, or microphone is not recognized by the computer.

Cause	Solution
The cable from the device to the computer does not work.	1. If possible, replace the cable. 2. Restart the computer.
The device is not working.	1. Replace the device. 2. Restart the computer.

Solving Internet access problems

If you encounter Internet access problems, consult your Internet Service Provider (ISP) or refer to the common causes and solutions listed in the following table.

Unable to connect to the Internet.

Cause	Solution
Internet Service Provider (ISP) account is not set up properly.	Verify Internet settings or contact your ISP for assistance.
Web browser is not set up properly.	Verify that the Web browser is installed and set up to work with your ISP.
Cable/DSL modem is not plugged in.	Plug in cable/DSL modem. You should see a “power” LED light on the front of the cable/DSL modem.
Cable/DSL service is not available or has been interrupted due to bad weather.	Try connecting to the Internet at a later time or contact your ISP. (If the cable/DSL service is connected, the “cable” LED light on the front of the cable/DSL modem will be on.)
The CAT5 UTP cable is disconnected.	Connect the CAT5 UTP cable between the cable modem and the computers’s RJ-45 connector. (If the connection is good, the “PC” LED light on the front of the cable/DSL modem will be on.)
IP address is not configured properly.	Contact your ISP for the correct IP address.
Cookies are corrupted. (A “cookie” is a small piece of information that a Web server can store temporarily with the Web browser. This is useful for having the browser remember some specific information that the Web server can later retrieve.)	1. Type `control panel` in the taskbar search box, and then select **Control Panel** from the list of applications. 2. Click **Internet Options**. 3. In the **Browsing history** section, click the **Delete** button. 4. Select the **Cookies and website data** check box and click the **Delete** button.

Cannot automatically launch Internet programs.

Cause	Solution
You must log on to your ISP before some programs will start.	Log on to your ISP and launch the desired program.

Solving software problems

Most software problems occur as a result of the following:

- The application was not installed or configured correctly.
- There is insufficient memory available to run the application.
- There is a conflict between applications.
- Be sure that all the needed device drivers have been installed.
- If you have installed an operating system other than the factory-installed operating system, check to be sure it is supported on the system.

If you encounter software problems, see the applicable solutions listed in the following table.

Computer will not continue and the HP logo does not display.

Cause	Solution
ROM issue - POST error has occurred.	Observe the beeps and LED lights on the front of the computer. See POST error messages and diagnostic front panel LEDs and audible codes on page 73 to determine possible causes. See the Worldwide Limited Warranty for terms and conditions.

"Illegal Operation has Occurred" error message is displayed.

Cause	Solution
Software being used is not Microsoft-certified for your version of Windows.	Verify that the software is certified by Microsoft for your version of Windows (see program packaging for this information).
Configuration files are corrupt.	If possible, save all data, close all programs, and restart the computer.

7 POST error messages and diagnostic front panel LEDs and audible codes

This appendix lists the error codes, error messages, and the various indicator light and audible sequences that you may encounter during Power-On Self-Test (POST) or computer restart, the probable source of the problem, and steps you can take to resolve the error condition.

POST Message Disabled suppresses most system messages during POST, such as memory count and non-error text messages. If a POST error occurs, the screen will display the error message. To manually switch to the POST Messages Enabled mode during POST, press any key (except F10, F11, or F12). The default mode is POST Message Disabled.

The speed at which the computer loads the operating system and the extent to which it is tested are determined by the POST mode selection.

Quick Boot is a fast startup process that does not run all of the system level tests, such as the memory test. Full Boot runs all of the ROM-based system tests and takes longer to complete.

Full Boot may also be enabled to run every 1 to 30 days on a regularly scheduled basis. To establish the schedule, reconfigure the computer to the Full Boot Every x Days mode, using Computer Setup.

NOTE: For more information on Computer Setup, see Computer Setup (F10) Utility on page 37.

POST numeric codes and text messages

This section covers those POST errors that have numeric codes associated with them. The section also includes some text messages that may be encountered during POST.

NOTE: The computer will beep once after a POST text message is displayed on the screen.

Control panel message	Description	Recommended action
002-Option ROM Checksum Error	System ROM or expansion board option ROM checksum.	1. Verify the correct ROM. 2. Flash the ROM if needed. 3. If an expansion board was recently added, remove it to see if the problem remains. 4. Clear CMOS. (See Password security and resetting CMOS on page 80.) 5. If the message disappears, there may be a problem with the expansion card. 6. Replace the system board.
003-System Board Failure	DMA or timers.	1. Clear CMOS. (See Password security and resetting CMOS on page 80.) 2. Remove expansion boards. 3. Replace the system board.
005-Real-Time Clock Power Loss	Invalid time or date in configuration memory.	Reset the date and time under **Control Panel** (Computer Setup can also be used). If

Control panel message	Description	Recommended action
	RTC (real-time clock) battery may need to be replaced.	the problem persists, replace the RTC battery. See the Removal and Replacement section for instructions on installing a new battery.
008–Microcode Patch Error	Processor is not supported by the BIOS.	1. Upgrade BIOS to proper version. 2. Change the processor.
009–PMM Allocation Error during MEBx Download	Memory error during POST execution of the Management Engine (ME) BIOS Extensions option ROM.	1. Reboot the computer. 2. Unplug the power cord, re-seat the memory modules, and reboot the computer. 3. If the memory configuration was recently changed, unplug the computer, restore the original memory configuration, and reboot the computer. 4. If the error persists, replace the system board.
00A-Product Information Not Valid	The product information programmed into the system board is missing or invalid.	Use Computer Setup to update this information.
00B-MEBx Module did not checksum correctly	Memory error during POST execution of the Management Engine (ME) BIOS Extensions option ROM.	1. Reboot the computer. 2. Unplug the power cord, re-seat the memory modules, and reboot the computer. 3. If the memory configuration was recently changed, unplug the power cord, restore the original memory configuration, and reboot the computer. 4. If the error persists, replace the system board.
00C-PMM Deallocation Error during MEBx Cleanup	Memory error during POST execution of the Management Engine (ME) BIOS Extensions option ROM.	1. Reboot the computer. 2. Unplug the power cord, re-seat the memory modules, and reboot the computer. 3. If the memory configuration was recently changed, unplug the power cord, restore the original memory configuration, and reboot the computer. 4. If the error persists, replace the system board.
00D-Setup Error during MEBx Execution	MEBx selection or exit resulted in a setup failure.	1. Reboot the computer. 2. Unplug the power cord, re-seat the memory modules, and reboot the computer. 3. If the memory configuration was recently changed, unplug the power cord, restore the original memory configuration, and reboot the computer. 4. If the error persists, replace the system board.

Control panel message	Description	Recommended action
00E-Inventory Error during MEBx Execution	BIOS information passed to the MEBx resulted in a failure.	1. Reboot the computer. 2. If the error persists, update to the latest BIOS version. 3. If the error still persists, replace the system board.
00F-Interface Error during MEBx Execution	MEBx operation experienced a hardware error during communication with the ME.	1. Reboot the computer. 2. If the error persists, update to the latest BIOS version. 3. If the error still persists, replace the system board.
100-Front Audio Not Connected	Front audio cable has been detached or unseated from system board.	Reconnect or replace front audio cable.
2E1-MemorySize Error	Memory amount has changed since the last boot (memory added or removed).	The system memory size is different from the last startup. The most common reason is the removal of memory from the system board. Press the F1 key to save the memory changes. If this message persists, verify that the memory modules are installed correctly.
2E2-Memory Error	Memory module configuration failed during boot up.	1. Ensure memory modules are correctly installed. 2. Verify proper memory module type. 3. Remove and replace the identified faulty memory module(s). 4. If the error persists after replacing memory modules, replace the system board.
2E3-Incompatible Memory Module in Memory Socket(s) X, X, ...	A memory module in memory socket identified in the error message is missing critical SPD information, or is incompatible with the chipset.	1. Verify proper memory module type. 2. Try another memory socket. 3. Replace with a supported module.
2E4-DIMM Configuration Warning	The current memory configuration is not optimized.	Rearrange the DIMMs so that each channel has the same amount of memory.
2E5-ECC Memory Module Detected on Unsupported Platform	Recently added memory module(s) support ECC memory error correction.	1. If additional memory was recently added, remove it to see if the problem remains. 2. Check product documentation for memory support information.
2E6–Memory Not Configured Correctly for Proper MEBx Execution	DIMM1 is not installed.	Make sure there is a memory module in the DIMM1 socket and that it is properly seated.
300–Configuration Change Warning	The storage device configuration will be updated as shown.	Not applicable
301-Hard Disk 1: SMART Hard Drive Detects Imminent Failure	Hard drive is about to fail. (Some hard drives have a hard drive firmware patch that will fix an erroneous error message.)	1. Determine if hard drive is giving correct error message. Run the Drive Protection System test under using F2 Diagnostics when booting the computer. 2. Apply hard drive firmware patch if applicable. (Available at http://www.hp.com/support.) 3. Back up contents and replace hard drive.

Control panel message	Description	Recommended action
302-Hard Disk 2: SMART Hard Drive Detects Imminent Failure	Hard drive is about to fail. (Some hard drives have a hard drive firmware patch that will fix an erroneous error message.)	1. Determine if hard drive is giving correct error message. Run the Drive Protection System test under using F2 Diagnostics when booting the computer. 2. Apply hard drive firmware patch if applicable. (Available at http://www.hp.com/support.) 3. Back up contents and replace hard drive.
309 – 30C: Hard Disk 3–6: SMART Hard Drive Detects Imminent Failure	Hard drive is about to fail. (Some hard drives have a hard drive firmware patch that will fix an erroneous error message.)	1. Determine if hard drive is giving correct error message. Run the Drive Protection System test under using F2 Diagnostics when booting the computer. 2. Apply hard drive firmware patch if applicable. (Available at http://www.hp.com/support.) 3. Back up contents and replace hard drive.
3F0–Boot Device Not Found	Boot device not found.	Insert boot device or load operating system.
3F1–Hard Disk 1 Error	Hard disk 1 error.	1. Check and/or replace cables. 2. Clear CMOS. (See Password security and resetting CMOS on page 80.) 3. Replace the hard disk drive.
3F2–Hard Disk 2 Error	Hard disk 2 error.	1. Check and/or replace cables. 2. Clear CMOS. (See Password security and resetting CMOS on page 80.) 3. Replace the hard disk drive.
400-Serial Port A Address Conflict Detected	Both external and internal serial ports are assigned to the same resources.	1. Remove any serial port expansion cards. 2. Clear CMOS. (See Password security and resetting CMOS on page 80.) 3. Reconfigure card resources and/or run Computer Setup or Windows utilities.
401-Serial Port B Address Conflict Detected	Both external and internal serial ports are assigned to the same resources.	1. Remove any serial port expansion cards. 2. Clear CMOS. (See Password security and resetting CMOS on page 80.) 3. Reconfigure card resources and/or run Computer Setup or Windows utilities.
402-Serial Port C Address Conflict Detected	Both external and internal serial ports are assigned to the same resources.	1. Remove any serial port expansion cards. 2. Clear CMOS. (See Password security and resetting CMOS on page 80.) 3. Reconfigure card resources and/or run Computer Setup or Windows utilities.
403-Serial Port D Address Conflict Detected	Both external and internal serial ports are assigned to the same resources.	1. Remove any serial port expansion cards. 2. Clear CMOS. (See Password security and resetting CMOS on page 80.) 3. Reconfigure card resources and/or run Computer Setup or Windows utilities.

Control panel message	Description	Recommended action
419-Out of Memory Space for Option ROMs	Recently added PCI expansion card contains an option ROM too large to download during POST.	▲ If a PCI expansion card was recently added, remove it to see if the problem remains.
41A-Front USB3 Not Connected	Front USB cable has been detached or unseated from system board.	Reconnect or replace front USB cable.
41B-Device in PCI Express Slot Failed To Initialize	There is an incompatibility or problem with a PCIe device and the system or PCIe link could not be configured to a valid bus width or speed.	Try rebooting the system. If the error reoccurs, the device may not work with this system
43A-USB Type-C I2C Not Connected	Cable is required between FIOUI-P (OCUlink) on I/O panel and OCUlink connector on the system board.	Install cable between I2C on card and USB-C on the system board.
43B-More Than One USB type-C Cards Are Installed	More than one USB type-C card is installed.	Remove USB type-C card so only one is installed.
500—BIOS Recovery	A system BIOS recovery has occurred.	Not applicable.
70x-Wireless Mode Not Supported	The system has detected a wireless module installed in the system that is not supported and has been disabled.	Replace with a supported module.
800-Keyboard Error	Keyboard failure.	1. Reconnect keyboard with computer turned off. 2. Check connector for bent or missing pins. 3. Ensure that none of the keys are depressed. 4. Replace keyboard.
801-Keyboard or System Unit Error	Keyboard failure.	1. Reconnect the keyboard with computer turned off. 2. Ensure that none of the keys are depressed. 3. Replace the keyboard. 4. Replace the system board.
900-CPU Fan Not Detected	CPU fan is not connected or may have malfunctioned.	1. Reseat CPU fan. 2. Reseat fan cable. 3. Replace CPU fan.
901-Chassis, Rear Chassis, or Front Chassis Fan not Detected	Chassis, rear chassis, or front chassis fan is not connected or may have malfunctioned.	1. Reseat chassis, rear chassis, or front chassis fan. 2. Reseat fan cable. 3. Replace chassis, rear chassis, or front chassis fan.
903-Computer Cover Has Been Removed Since Last System Startup		N/A
904-SATA Cabling Error	One or more SATA devices are improperly attached. For optimal performance, the SATA 0 and SATA 1 ports should be used for hard drives before other ports.	Ensure SATA connectors are used in ascending order. For one device, use SATA 0. For two devices, use SATA 0 and SATA 1. For three devices, use SATA 0, SATA 1, and SATA 2.
90B-Fan Failure	The system has detected that a cooling fan is not operating correctly.	1. Reseat fan. 2. Reseat fan cable.

Control panel message	Description	Recommended action
		3. Replace fan.
90D-System Temperature	Thermal shutdown occurred. The system BIOS has detected your machine was previously shut down to avoid overheating. Overheating may occur if the cooling vents are blocked or the operating temperature exceeds the system specifications. The machine should return to normal operation once the situation is resolved.	Make sure system has proper airflow.
90E-Power Supply Fan Not detected	Power supply fan is not connected or may have malfunctioned.	1. Reseat power supply fan. 2. Reseat fan cable. 3. Replace power supply fan.
910–Filter Warning	Airflow filter is dirty.	Replace the airflow filter.

Interpreting system validation diagnostic front panel LEDs and audible codes

During the system validation phase that occurs at system startup, the BIOS validates the functionality of the following subsystems and conditions:

- System board power
- Processor failure
- BIOS corruption
- Memory failure
- Graphics failure
- System board failure
- BIOS authentication failure

If an error is detected, specific patterns of long and short blinks, accompanied by long and short beeps (where applicable) are used to identify the error. These patterns will make up a two part code:

- Major – the category of the error
- Minor – the specific error within the category

NOTE: Single beep/blink codes are not used.

Number of long beeps/blinks	Error category
1	Not used
2	BIOS
3	Hardware
4	Thermal
5	System board

Patterns of blink/beep codes are determined by using the following parameters:

- 1 second pause occurs after the last major blink.
- 2 second pause occurs after the last minor blink.
- Beep error code sequences occur for the first 5 iterations of the pattern and then stop.
- Blink error code sequences continue until the computer is unplugged or the power button is pressed.

NOTE: Not all diagnostic lights and audible codes are available on all models.

The red LED blinks to represent the major error category (long blinks). The white LED blinks to represent the minor error category (short blinks). For example, '3.5' indicates 3 long red blinks and 5 short white blinks to communicate the processor is not detected.

Category	Major/minor code	Description
BIOS	2.2	The main area (DXE) of BIOS has become corrupted and there is no recovery binary image available.
	2.3	The embedded controller policy requires the user to enter a key sequence.
	2.4	The embedded controller is checking or recovering the boot block.
Hardware	3.2	The embedded controller has timed out waiting for BIOS to return from memory initialization.
	3.3	The embedded controller has timed out waiting for BIOS to return from graphics initialization.
	3.4	The system board displays a power failure (crowbar).*
	3.5	The processor is not detected.*
	3.6	The processor does not support an enabled feature.
Thermal	4.2	A processor over temperature condition has been detected.*
	4.3	An ambient temperature over temperature condition has been detected.
System board	5.2	The embedded controller cannot find valid firmware.
	5.3	The embedded controller has timed out waiting for the BIOS.
	5.4	The embedded controller has timed out waiting for BIOS to return from system board initialization.
	5.5	The embedded controller rebooted the system after a possible lockup condition had been detected through the use of a System Health Timer, Automated System Recovery Timer, or other mechanism.

* Indicates hardware triggered event; all other events are controlled by the BIOS.

8 Password security and resetting CMOS

This computer supports security password features, which can be established through the Computer Setup Utilities menu.

This computer supports two security password features that are established through the Computer Setup Utilities menu: administrator password and power-on password. When you establish only an administrator password, any user can access all the information on the computer except Computer Setup. When you establish only a power-on password, the power-on password is required to access Computer Setup and any other information on the computer. When you establish both passwords, only the administrator password will give you access to Computer Setup.

When both passwords are set, the administrator password can also be used in place of the power-on password as an override to log in to the computer. This is a useful feature for a network administrator.

If you forget one or both passwords, you can clear all passwords by powering off the system, opening the cover, temporarily removing the CLR_PSWD jumper, and booting once. This will erase the administrator and power-on passwords. You must restore the jumper to create new passwords.

The computer's configuration memory (CMOS) stores information about the computer's configuration.

The CMOS jumper resets CMOS but does not clear the power-on and setup passwords.

⚠ CAUTION: Resetting the CMOS with power removed will reset the BIOS settings to factory defaults. It may be useful to back up the BIOS settings or save them as custom defaults before resetting them in case they are needed later. Back up can be performed in Computer Setup or using the BiosConfigUtility tool available from www.hp.com. See Computer Setup (F10) Utility on page 37 for information on backing up the BIOS settings.

Resetting CMOS resets BIOS settings to default, but does not clear the passwords or affect any of the other Security settings. On Intel systems with advanced manageability features, resetting CMOS will also partially unprovision AMT.

⚠ CAUTION: Stringent security is a mode where there is no physical bypass of the password function. If enabled, removing the password jumper will be ignored. To enable this mode, change the security setting **Clear Password Jumper** in Password Policies to **Ignore**.

If you lose or forget the password when in stringent security mode, the system can only be reset by System Management Command. This is a way for HP Service and Support to provide a secure method to access the BIOS and command a password reset for a specifically identified unit under the direction of the owner. This scenario may not be covered under warranty.

To prevent needing a customer service event to restore access to the system, record your configured administrator and power-on passwords in a safe place away from your computer.

NOTE: You will receive POST error messages after clearing CMOS and rebooting advising you that configuration changes have occurred. Use Computer Setup to reset any special system setups along with the date and time.

⚠ CAUTION: It is important to back up the computer CMOS settings before resetting them in case they are needed later. Back up is easily done through Computer Setup. See Computer Setup (F10) Utility on page 37 for information on backing up the CMOS settings.

Resetting CMOS and/or the password jumper

This computer supports security password features, which can be established through the Computer Setup Utilities menu.

This computer supports two security password features that are established through the Computer Setup Utilities menu: administrator password and power-on password. When you establish only an administrator password, any user can access all the information on the computer except Computer Setup. When you establish only a power-on password, the power-on password is required to access Computer Setup and any other information on the computer. When you establish both passwords, only the administrator password will give you access to Computer Setup.

When both passwords are set, the administrator password can also be used in place of the power-on password as an override to log in to the computer. This is a useful feature for a network administrator.

If you forget one or both passwords, you can clear all passwords by powering off the system, opening the cover, temporarily removing the CMOS/PSWD jumper, and booting once. This will erase the administrator and power-on passwords. You must restore the jumper to create new passwords.

⚠ CAUTION: Resetting the CMOS with power removed will reset the BIOS settings to factory defaults. It may be useful to back up the BIOS settings or save them as custom defaults before resetting them in case they are needed later. Back up can be performed in Computer Setup or using the BiosConfigUtility tool available from www.hp.com. See Computer Setup (F10) Utility on page 37 for information on backing up the BIOS settings.

Resetting CMOS resets BIOS settings to default, but does not clear the passwords or affect any of the other Security settings. On Intel systems with advanced manageability features, resetting CMOS will also partially unprovision AMT.

⚠ CAUTION: Stringent security is a mode where there is no physical bypass of the password function. If enabled, removing the password jumper will be ignored. To enable this mode, change the security setting **Clear Password Jumper** in Password Policies to **Ignore**.

If you lose or forget the password when in stringent security mode, the system can only be reset by System Management Command. This is a way for HP Service and Support to provide a secure method to access the BIOS and command a password reset for a specifically identified unit under the direction of the owner. This scenario may not be covered under warranty.

To prevent needing a customer service event to restore access to the system, record your configured administrator and power-on passwords in a safe place away from your computer.

NOTE: You will receive POST error messages after clearing CMOS and rebooting advising you that configuration changes have occurred. Use Computer Setup to reset any special system setups along with the date and time.

To clear CMOS, disable the power-on or administrator password features, or to clear the power-on or administrator passwords, complete the following steps:

1. Shut down the operating system properly, then turn off the computer and any external devices, and disconnect the power cord from the power outlet.
2. With the power cord disconnected, press the power button again to drain the system of any residual power.

WARNING! To reduce the risk of personal injury from electrical shock and/or hot surfaces, be sure to disconnect the power cord from the wall outlet, and allow the internal system components to cool before touching.

CAUTION: When the computer is plugged in, the power supply always has voltage applied to the system board even when the unit is turned off. Failure to disconnect the power cord can result in damage to the system.

Static electricity can damage the electronic components of the computer or optional equipment. Before beginning these procedures, ensure that you are discharged of static electricity by briefly touching a grounded metal object. See the *Safety & Regulatory Information* guide for more information.

3. Remove the access panel.
4. Locate the header and jumper labeled PSWD.

NOTE: The password jumper is blue so that it can be easily identified.

5. Remove the jumper from pins 1 and 2.
6. Place the jumper on either pin 1 or 2, but not both, so that it does not get lost.
7. Replace the access panel and reconnect the external equipment.
8. Plug in the computer and turn on power. Allow the operating system to start. This clears the current passwords and disables the password features.
9. Shut down the computer, unplug the power, and disconnect the external equipment.
10. Remove the access panel.
11. Place the jumper on pins 1 and 2.
12. Replace the access panel.
13. Reconnect the external equipment and plug in the computer.

Changing a Setup or Power-on password

To change the power-on or setup password, complete the following steps:

1. Turn on or restart the computer.

   To change the Setup password, go to step 2.

   To change the Power-on password, go to step 3.

2. To change the Setup password, as soon as the computer turns on:

   - Press the Esc key while “Press the ESC key for Startup Menu” message is displayed.

   - Press the F10 key to enter Computer Setup.

3. When the key icon appears, type your current password, a slash (/) or alternate delimiter character, your new password, another slash (/) or alternate delimiter character, and your new password again as shown:

   current password/new password/new password

   NOTE: Type the new password carefully since the characters do not appear on the screen.

4. Press Enter.

The new password will take effect the next time the computer is restarted.

Deleting a Setup or Power-on password

To delete the power-on or setup password, complete the following steps:

1. Turn on or restart the computer.

   To delete the Setup password, go to step 2.

   To delete the Power-on password, go to step 3.

2. To delete the Setup password, as soon as the computer turns on:

   - Press the Esc key while “Press the ESC key for Startup Menu” message is displayed.

   - Press the F10 key to enter Computer Setup.

3. When the key icon appears, type your current password, a slash (/) or alternate delimiter character, your new password, another slash (/) or alternate delimiter character, and your new password again as shown:

   current password/

4. Press Enter.

9 Using HP PC Hardware Diagnostics (UEFI)

Using HP PC Hardware Diagnostics Windows

HP PC Hardware Diagnostics Windows is a Windows-based utility that allows you to run diagnostic tests to determine whether the computer hardware is functioning properly. The tool runs within the Windows operating system in order to diagnose hardware failures.

If HP PC Hardware Diagnostics is not installed on your computer, first you must download and install it. To download HP PC Hardware Diagnostics Windows, see Downloading HP PC Hardware Diagnostics Windows on page 85.

After HP PC Hardware Diagnostics Windows is installed, follow these steps to access it from HP Help and Support or HP Support Assistant.

1. To access HP PC Hardware Diagnostics Windows from HP Help and Support:

   a. Select the **Start** button, and then select **HP Help and Support**.

   b. Right-click **HP PC Hardware Diagnostics Windows**, select **More**, and then select **Run as administrator**.

   –or–

   To access HP PC Hardware Diagnostics Windows from HP Support Assistant:

   a. Type `support` in the taskbar search box, and then select the **HP Support Assistant** app.

      –or–

      Select the question mark icon in the taskbar.

   b. Select **Troubleshooting and fixes**.

   c. Select **Diagnostics**, and then select **HP PC Hardware Diagnostics Windows**.

2. When the tool opens, select the type of diagnostic test you want to run, and then follow the on-screen instructions.

   NOTICE: If you need to stop a diagnostic test at any time, select **Cancel**.

3. When HP PC Hardware Diagnostics Windows detects a failure that requires hardware replacement, a 24-digit Failure ID code is generated. For assistance in correcting the problem, contact support, and then provide the Failure ID code.

Downloading HP PC Hardware Diagnostics Windows

- The HP PC Hardware Diagnostics Windows download instructions are provided in English only.
- You must use a Windows computer to download this tool because only .exe files are provided.

Downloading the latest HP PC Hardware Diagnostics Windows version

To download HP PC Hardware Diagnostics Windows, follow these steps:

1. Go to http://www.hp.com/go/techcenter/pcdiags. The HP PC Diagnostics home page is displayed.
2. In the **HP PC Hardware Diagnostics** section, select **Download**, and then select the installation location:

   To run the tool on your computer, download it to the computer desktop.

   –or–

   To run the tool from a flash drive, download it to a flash drive.
3. Select **Run**.

Downloading HP Hardware Diagnostics Windows by product name or number (select products only)

To download HP PC Hardware Diagnostics Windows by product name or number (select products only), follow these steps:

NOTE: For some products, it may be necessary to download the software to a flash drive by using the product name or number.

1. Go to http://www.hp.com/support.
2. Select **Get software and drivers**, and then enter the product name or number.
3. In the **HP PC Hardware Diagnostics** section, select **Download**, and then select the installation location:

   To run the tool on your computer, download it to the computer desktop.

   –or–

   To run the tool from a flash drive, download it to a flash drive.
4. Select **Run**.

Installing HP PC Hardware Diagnostics Windows

To install HP PC Hardware Diagnostics Windows, follow these steps:

▲ Navigate to the folder on your computer or the flash drive where the .exe file was downloaded, double-click the .exe file, and then follow the on-screen instructions.

Using HP PC Hardware Diagnostics UEFI

HP PC Hardware Diagnostics UEFI (Unified Extensible Firmware Interface) allows you to run diagnostic tests to determine whether the computer hardware is functioning properly. The tool runs outside the operating system so that it can isolate hardware failures from issues that are caused by the operating system or other software components.

If your PC will not boot into Windows, you can use HP PC Hardware Diagnostics UEFI to diagnose hardware issues.

When HP PC Hardware Diagnostics UEFI detects a failure that requires hardware replacement, a 24-digit Failure ID code is generated. For assistance in correcting the problem, contact support, and provide the Failure ID code.

NOTE: To start diagnostics on a convertible computer, your computer must be in notebook mode, and you must use the attached keyboard.

NOTE: If you need to stop a diagnostic test, press esc.

Starting HP PC Hardware Diagnostics UEFI

To start HP PC Hardware Diagnostics UEFI, follow these steps:

1. Turn on or restart the computer, and quickly press esc.
2. Press f2.

   The BIOS searches three places for the diagnostic tools, in the following order:

   a. Connected USB drive

      NOTE: To download the HP PC Hardware Diagnostics UEFI tool to a USB drive, see Downloading HP PC Hardware Diagnostics UEFI to a USB device on page 86.

   b. Hard drive

   c. BIOS
3. When the diagnostic tool opens, select the type of diagnostic test you want to run, and then follow the on-screen instructions.

Downloading HP PC Hardware Diagnostics UEFI to a USB device

Downloading HP PC Hardware Diagnostics UEFI to a USB device (flash drive) can be useful in the following situations:

- HP PC Hardware Diagnostics UEFI is not included in the preinstall image.
- HP PC Hardware Diagnostics UEFI is not included in the HP Tool partition.
- The hard drive is damaged.

NOTE: The HP PC Hardware Diagnostics UEFI download instructions are provided in English only, and you must use a Windows computer to download and create the HP UEFI support environment because only .exe files are provided.

Downloading the latest HP PC Hardware Diagnostics UEFI version

To download the latest HP PC Hardware Diagnostics UEFI version to a flash drive:

1. Go to http://www.hp.com/go/techcenter/pcdiags. The HP PC Diagnostics home page is displayed.
2. In the **HP PC Hardware Diagnostics UEFI** section, select **Download UEFI Diagnostics**, and then select **Run**.

Downloading HP PC Hardware Diagnostics UEFI by product name or number (select products only)

To download HP PC Hardware Diagnostics UEFI by product name or number (select products only) to a flash drive:

1. Go to http://www.hp.com/support.
2. Enter the product name or number, select your computer, and then select your operating system.
3. In the **Diagnostics** section, follow the on-screen instructions to select and download the specific UEFI Diagnostics version for your computer.

Using Remote HP PC Hardware Diagnostics UEFI settings (select products only)

Remote HP PC Hardware Diagnostics UEFI is a firmware (BIOS) feature that downloads HP PC Hardware Diagnostics UEFI to your computer. It can then execute the diagnostics on your computer, and it may upload results to a preconfigured server. For more information on Remote HP PC Hardware Diagnostics UEFI, go to http://www.hp.com/go/techcenter/pcdiags, and then select **Find out more**.

Downloading Remote HP PC Hardware Diagnostics UEFI

NOTE: HP Remote PC Hardware Diagnostics UEFI is also available as a Softpaq that can be downloaded to a server.

Downloading the latest Remote HP PC Hardware Diagnostics UEFI version

To download the latest Remote HP PC Hardware Diagnostics UEFI version, follow these steps:

1. Go to http://www.hp.com/go/techcenter/pcdiags. The HP PC Diagnostics home page is displayed.
2. In the **HP PC Hardware Diagnostics UEFI** section, select **Download Remote Diagnostics**, and then select **Run**.

Downloading Remote HP PC Hardware Diagnostics UEFI by product name or number

To download HP Remote PC Hardware Diagnostics UEFI by product name or number, follow these steps:

1. Go to http://www.hp.com/support.
2. Select **Get software and drivers**, enter the product name or number, select your computer, and then select your operating system.
3. In the **Diagnostics** section, follow the on-screen instructions to select and download the Remote UEFI version for the product.

Customizing Remote HP PC Hardware Diagnostics UEFI settings

Using the Remote HP PC Hardware Diagnostics setting in Computer Setup (BIOS), you can perform the following customizations:

- Set a schedule for running diagnostics unattended. You can also start diagnostics immediately in interactive mode by selecting Execute Remote HP PC Hardware Diagnostics.
- Set the location for downloading the diagnostic tools. This feature provides access to the tools from the HP website or from a server that has been preconfigured for use. Your computer does not require the traditional local storage (such as a disk drive or USB flash drive) to run remote diagnostics.
- Set a location for storing the test results. You can also set the user name and password settings used for uploads.
- Display status information about the diagnostics run previously.

To customize Remote HP PC Hardware Diagnostics UEFI settings, follow these steps:

1. Turn on or restart the computer, and when the HP logo appears, press f10 to enter Computer Setup.
2. Select **Advanced**, and then select **Settings**.
3. Make your customization selections.
4. Select **Main**, and then **Save Changes and Exit** to save your settings.

Your changes take effect when the computer restarts.

10 System backup and recovery

Backing up, restoring, and recovering in Windows 10

This section provides information about the following processes. The information in the section is standard procedure for most products.

- Creating recovery media and backups
- Restoring and recovering your system

For additional information, refer to Help and Support.

▲ Type `help` in the taskbar search box, and then select **Help and Support**.

Creating recovery media and backups

The following methods of creating recovery media and backups are available on select products only. Choose the available method according to your computer model.

- Use HP Recovery Manager to create HP Recovery media after you successfully set up the computer. This step creates a backup of the HP Recovery partition on the computer. The backup can be used to reinstall the original operating system in cases where the hard drive is corrupted or has been replaced. For information on creating recovery media, see Creating HP Recovery media (select products only) on page 89. For information on the recovery options that are available using the recovery media, see What you need to know before you get started on page 91.
- Use Windows tools to create system restore points and create backups of personal information.

  For more information, see Using Windows tools on page 90.

NOTE: If storage is 32 GB or less, Microsoft System Restore is disabled by default.

Creating HP Recovery media (select products only)

If possible, check for the presence of the Recovery partition and the Windows partition. From the Start menu, select **File Explorer**.

- If your computer does not list the Windows partition and the Recovery partition, you can obtain recovery media for your system from support. See the *Worldwide Telephone Numbers* booklet included with the computer. You can also find contact information on the HP website. Go to http://www.hp.com/support, select your country or region, and follow the on-screen instructions.

  You can use Windows tools to create system restore points and create backups of personal information, see Using Windows tools on page 90.
- If your computer does list the Recovery partition and the Windows partition, you can use HP Recovery Manager to create recovery media after you successfully set up the computer. HP Recovery media can be used to perform system recovery if the hard drive becomes corrupted. System recovery reinstalls the original operating system and software programs that were installed at the factory and then configures the settings for the programs. HP Recovery media can also be used to customize the system or restore the factory image if you replace the hard drive.

- Only one set of recovery media can be created. Handle these recovery tools carefully, and keep them in a safe place.
- HP Recovery Manager examines the computer and determines the required storage capacity for the media that will be required.
- To create recovery discs, your computer must have an optical drive with DVD writer capability, and you must use only high-quality blank DVD-R, DVD+R, DVD-R DL, or DVD+R DL discs. Do not use rewritable discs such as CD±RW, DVD±RW, double-layer DVD±RW, or BD-RE (rewritable Blu-ray) discs; they are not compatible with HP Recovery Manager software. Or, instead, you can use a high-quality blank USB flash drive.
- If your computer does not include an integrated optical drive with DVD writer capability, but you would like to create DVD recovery media, you can use an external optical drive (purchased separately) to create recovery discs. If you use an external optical drive, it must be connected directly to a USB port on the computer; the drive cannot be connected to a USB port on an external device, such as a USB hub. If you cannot create DVD media yourself, you can obtain recovery discs for your computer from HP. See the *Worldwide Telephone Numbers* booklet included with the computer. You can also find contact information on the HP website. Go to http://www.hp.com/support, select your country or region, and follow the on-screen instructions.
- Be sure that the computer is connected to AC power before you begin creating the recovery media.
- The creation process can take an hour or more. Do not interrupt the creation process.
- If necessary, you can exit the program before you have finished creating all of the recovery DVDs. HP Recovery Manager will finish burning the current DVD. The next time you start HP Recovery Manager, you will be prompted to continue.

To create HP Recovery media:

1. Type `recovery` in the taskbar search box, and then select **HP Recovery Manager**.
2. Select **Create recovery media**, and then follow the on-screen instructions.

If you ever need to recover the system, see Recovering using HP Recovery Manager on page 91.

Using Windows tools

You can create recovery media, system restore points, and backups of personal information using Windows tools.

NOTE: If storage is 32 GB or less, Microsoft System Restore is disabled by default.

For more information and steps, see Help and Support.

- Type `help` in the taskbar search box, and then select Help and Support.

Restore and recovery

There are several options for recovering your system. Choose the method that best matches your situation and level of expertise:

IMPORTANT: Not all methods are available on all products.

- Windows offers several options for restoring from backup, refreshing the computer, and resetting the computer to its original state. For more information see Help and Support.

  ▲ Type `help` in the taskbar search box, and then select **Help and Support**.

- If you need to correct a problem with a preinstalled application or driver, use the Reinstall drivers and/ or applications option (select products only) of HP Recovery Manager to reinstall the individual application or driver.

  ▲ Type `recovery` in the taskbar search box, select **HP Recovery Manager**, select **Reinstall drivers and/or applications**, and then follow the on-screen instructions.

- If you want to recover the Windows partition to original factory content, you can choose the System Recovery option from the HP Recovery partition (select products only) or use the HP Recovery media. For more information, see Recovering using HP Recovery Manager on page 91. If you have not already created recovery media, see Creating HP Recovery media (select products only) on page 89.

- On select products, if you want to recover the computer's original factory partition and content, or if you have replaced the hard drive, you can use the Factory Reset option of HP Recovery media. For more information, see Recovering using HP Recovery Manager on page 91.

- On select products, if you want to remove the recovery partition to reclaim hard drive space, HP Recovery Manager offers the Remove Recovery Partition option.

  For more information, see Removing the HP Recovery partition (select products only) on page 93.

Recovering using HP Recovery Manager

HP Recovery Manager software allows you to recover the computer to its original factory state by using the HP Recovery media that you either created or that you obtained from HP, or by using the HP Recovery partition (select products only). If you have not already created recovery media, see Creating HP Recovery media (select products only) on page 89.

What you need to know before you get started

- HP Recovery Manager recovers only software that was installed at the factory. For software not provided with this computer, you must either download the software from the manufacturer's website or reinstall the software from the media provided by the manufacturer.

  IMPORTANT: Recovery through HP Recovery Manager should be used as a final attempt to correct computer issues.

- HP Recovery media must be used if the computer hard drive fails. If you have not already created recovery media, see Creating HP Recovery media (select products only) on page 89.

- To use the Factory Reset option (select products only), you must use HP Recovery media. If you have not already created recovery media, see Creating HP Recovery media (select products only) on page 89.

- If your computer does not allow the creation of HP Recovery media or if the HP Recovery media does not work, you can obtain recovery media for your system from support. See the *Worldwide Telephone Numbers* booklet included with the computer. You can also find contact information from the HP website. Go to http://www.hp.com/support, select your country or region, and follow the on-screen instructions.

IMPORTANT: HP Recovery Manager does not automatically provide backups of your personal data. Before beginning recovery, back up any personal data you want to retain.

Using HP Recovery media, you can choose from one of the following recovery options:

NOTE: Only the options available for your computer display when you start the recovery process.

- System Recovery—Reinstalls the original operating system, and then configures the settings for the programs that were installed at the factory.
- Factory Reset—Restores the computer to its original factory state by deleting all information from the hard drive and re-creating the partitions. Then it reinstalls the operating system and the software that was installed at the factory.

The HP Recovery partition (select products only) allows System Recovery only.

Using the HP Recovery partition (select products only)

The HP Recovery partition allows you to perform a system recovery without the need for recovery discs or a recovery USB flash drive. This type of recovery can be used only if the hard drive is still working.

To start HP Recovery Manager from the HP Recovery partition:

1. Type `recovery` in the taskbar search box, select **Recovery Manager**, and then select **HP Recovery Environment**.

   - or -

   Press f11 while the computer boots, or press and hold f11 as you press the power button.
2. Select **Troubleshoot** from the boot options menu.
3. Select **Recovery Manager**, and then follow the on-screen instructions.

Using HP Recovery media to recover

You can use HP Recovery media to recover the original system. This method can be used if your system does not have an HP Recovery partition or if the hard drive is not working properly.

1. If possible, back up all personal files.
2. Insert the HP Recovery media, and then restart the computer.

   NOTE: If the computer does not automatically restart in HP Recovery Manager, change the computer boot order. See Changing the computer boot order on page 93.
3. Follow the on-screen instructions.

Changing the computer boot order

If your computer does not restart in HP Recovery Manager, you can change the computer boot order, which is the order of devices listed in BIOS where the computer looks for startup information. You can change the selection to an optical drive or a USB flash drive.

To change the boot order:

1. Insert the HP Recovery media.
2. Access BIOS.

   Restart the computer, quickly press esc, and then press f9 for boot options.
3. Select the optical drive or USB flash drive from which you want to boot.
4. Follow the on-screen instructions.

Removing the HP Recovery partition (select products only)

HP Recovery Manager software allows you to remove the HP Recovery partition to free up hard drive space.

IMPORTANT: After you remove the HP Recovery partition, you will not be able to perform System Recovery or create HP recovery media from the HP Recovery partition. So before you remove the Recovery partition, create HP Recovery media; see Creating HP Recovery media (select products only) on page 89.

NOTE: The Remove Recovery Partition option is only available on products that support this function.

Follow these steps to remove the HP Recovery partition:

1. Type `recovery` in the taskbar search box, and then select **HP Recovery Manager**.
2. Select **Remove Recovery Partition**, and then follow the on-screen instructions.

A Battery replacement

The battery that comes with the computer provides power to the real-time clock. When replacing the battery, use a battery equivalent to the battery originally installed in the computer. The computer comes with a 3-volt lithium coin cell battery.

⚠ WARNING! The product may contain an internal lithium manganese dioxide, vanadium pentoxide, or alkaline battery or battery pack. There is risk of fire and burns if the battery pack is not handled properly.

⚠ WARNING! Do not attempt to recharge the battery.

⚠ WARNING! Do not expose to temperatures higher than 60° C (140° F).

⚠ WARNING! Do not disassemble, crush, puncture, short external contacts, or dispose of in fire or water.

⚠ WARNING! Risk of explosion if battery is replaced by an incorrect type. Dispose of used batteries according to the instructions.

⚠ WARNING! Replace only with the HP spare designated for this product.

⚠ WARNING! Do not ingest battery, a Chemical Burn Hazard.

⚠ WARNING! This product contains a coin/button cell battery. If the coin/button cell battery is swallowed, it can cause severe internal burns in just 2 hours and can lead to death.

⚠ WARNING! Keep new and used batteries away from children.

⚠ WARNING! If the battery compartment does not close securely, stop using the product and keep it away from children.

⚠ WARNING! If you think batteries might have been swallowed or placed inside any part of the body, seek immediate medical attention.

⚠ WARNING! Leaving a battery in an extremely high temperature surrounding environment can result in an explosion or the leakage of flammable liquid or gas.

⚠ WARNING! A battery subjected to extremely low air pressure may result in an explosion or the leakage of flammable liquid or gas.

⚠ CAUTION: Before replacing the battery, it is important to back up the computer CMOS settings. When the battery is removed or replaced, the CMOS settings will be cleared.

Static electricity can damage the electronic components of the computer or optional equipment. Before beginning these procedures, ensure that you are discharged of static electricity by briefly touching a grounded metal object.

NOTE: The lifetime of the lithium battery can be extended by plugging the computer into a live AC wall socket. The lithium battery is only used when the computer is NOT connected to AC power.

HP encourages customers to recycle used electronic hardware, HP original print cartridges, and rechargeable batteries. For more information about recycling programs, go to http://www.hp.com/recycle.

1. Remove/disengage any security devices that prohibit opening the computer.
2. Remove all removable media, such as compact discs or USB flash drives, from the computer.
3. Turn off the computer properly through the operating system, then turn off any external devices.
4. Disconnect the power cord from the power outlet and disconnect any external devices.

CAUTION: Regardless of the power-on state, voltage is always present on the system board as long as the system is plugged into an active AC outlet. You must disconnect the power cord to avoid damage to the internal components of the computer.

5. Remove the access panel.
6. Locate the battery and battery holder on the system board.

NOTE: On some computer models, it may be necessary to remove an internal component to gain access to the battery.

7. Depending on the type of battery holder on the system board, complete the following instructions to replace the battery.

Type 1

a. Lift the battery out of its holder.

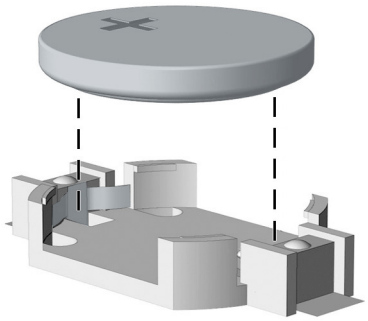

b. Slide the replacement battery into position, positive side up. The battery holder automatically secures the battery in the proper position.

Type 2

a. To release the battery from its holder, squeeze the metal clamp that extends above one edge of the battery. When the battery pops up, lift it out (1).

b. To insert the new battery, slide one edge of the replacement battery under the holder's lip with the positive side up. Push the other edge down until the clamp snaps over the other edge of the battery (2).

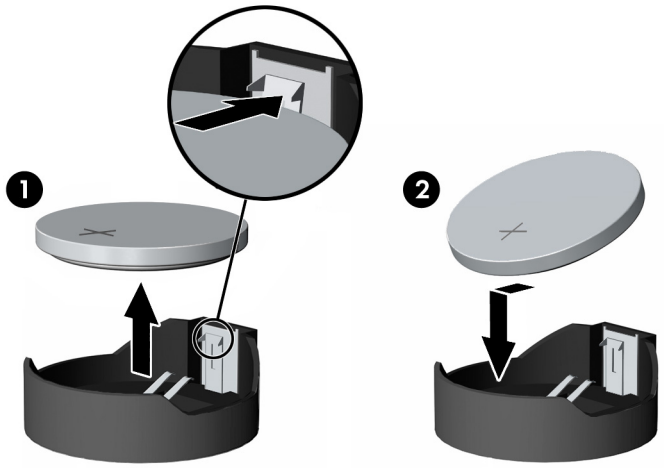

Type 3

a. Pull back on the clip **(1)** that is holding the battery in place, and remove the battery **(2)**.

b. Insert the new battery and position the clip back into place.

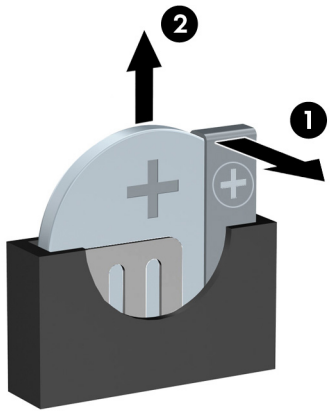

NOTE: After the battery has been replaced, use the following steps to complete this procedure.

8. Replace the access panel.
9. Plug in the computer and turn on power to the computer.
10. Reset the date and time, your passwords, and any special system setups using Computer Setup.
11. Lock any security devices that were disengaged when the access panel was removed.

B Statement of memory volatility

The purpose of this chapter is to provide general information regarding nonvolatile memory in HP Business PCs. This chapter also provides general instructions for restoring nonvolatile memory that can contain personal data after the system has been powered off and the hard drive has been removed.

HP Business PC products that use Intel®-based or AMD®-based system boards contain volatile DDR memory. The amount of nonvolatile memory present in the system depends upon the system configuration. Intel-based and AMD-based system boards contain nonvolatile memory subcomponents as originally shipped from HP, assuming that no subsequent modifications have been made to the system and assuming that no applications, features, or functionality have been added to or installed on the system.

Following system shutdown and removal of all power sources from an HP Business PC system, personal data can remain on volatile system memory (DIMMs) for a finite period of time and will also remain in nonvolatile memory. Use the steps below to remove personal data from the PC, including the nonvolatile memory found in Intel-based and AMD-based system boards.

Current BIOS steps

1. Follow steps (a) through (l) below to restore the nonvolatile memory that can contain personal data. Restoring or reprogramming nonvolatile memory that does not store personal data is neither necessary nor recommended.

   a. Turn on or restart the computer, and then press esc while the "Press the ESC key for Startup Menu" message is displayed at the bottom of the screen.

   NOTE: If the system has a BIOS administrator password, enter the password at the prompt.

   b. Select **Main**, select **Apply Factory Defaults and Exit**, and then select **Yes** to load defaults.

      The computer will reboot.

   c. During the reboot, press esc while the "Press the ESC key for Startup Menu" message is displayed at the bottom of the screen.

   NOTE: If the system has a BIOS administrator password, enter the password at the prompt.

   d. Select the **Security** menu, select **Restore Security Settings to Factory Defaults**, and then select **Yes** to restore security level defaults.

      The computer will reboot.

   e. During the reboot, press esc while the "Press the ESC key for Startup Menu" message is displayed at the bottom of the screen.

   NOTE: If the system has a BIOS administrator password, enter the password at the prompt.

   f. If an asset or ownership tag is set, select the **Security** menu and scroll down to the **Utilities** menu. Select **System IDs**, and then select **Asset Tracking Number**. Clear the tag, and then make the selection to return to the prior menu.

   g. If a DriveLock password is set, select the **Security** menu, and scroll down to **Hard Drive Utilities** under the **Utilities** menu. Select **Hard Drive Utilities**, select **DriveLock**, then uncheck the checkbox for **DriveLock** password on restart. Select **OK** to proceed.

h. Select the **Main** menu, and then select **Reset BIOS Security to factory default**. Click **Yes** at the warning message.

   The computer will reboot.

i. During the reboot, press esc while the "Press the ESC key for Startup Menu" message is displayed at the bottom of the screen.

   NOTE: If the system has a BIOS administrator password, enter the password at the prompt.

j. Select the **Main** menu, select **Apply Factory Defaults and Exit**, select **Yes** to save changes and exit, and then select **Shutdown**.

k. Reboot the system. If the system has a Trusted Platform Module (TPM) and/or fingerprint reader, one or two prompts will appear—one to clear the TPM and the other to Reset Fingerprint Sensor; press or tap F1 to accept or F2 to reject.

l. Remove all power and system batteries for at least 24 hours.

2. Complete one of the following:

- Remove and retain the storage drive.

  – or –

- Clear the drive contents by using a third party utility designed to erase data from a solid-state drive.

  – or –

- Clear the contents of the drive by using the following BIOS Setup Secure Erase command option steps:

  IMPORTANT: If you clear data using Secure Erase, it cannot be recovered.

a. Turn on or restart the computer, and then press esc while the "Press the ESC key for Startup Menu" message is displayed at the bottom of the screen.

b. Select the **Security** menu and scroll down to the **Utilities** menu.

c. Select **Hard Drive Utilities**.

d. Under **Utilities**, select **Secure Erase**, select the hard drive storing the data you want to clear, and then follow the on-screen instructions to continue.

Nonvolatile memory usage

Nonvolatile memory type	Amount (Size)	Does this memory store customer data?	Does this memory retain data when power is removed?	What is the purpose of this memory?	How is data input into this memory?	How is this memory write-protected?
HP Sure Start flash (select models only)	8 MBytes	No	Yes	Provides protected backup of critical System BIOS code, EC firmware, and critical PC configuration data for select platforms that support HP Sure Start. For more information, see Using HP Sure Start (select models only) on page 102.	Data cannot be written to this device via the host processor. The content is managed solely by the HP Sure Start Embedded Controller.	This memory is protected by the HP Sure Start Embedded Controller.
Real Time Clock (RTC) battery backed-up CMOS configuration memory	256 Bytes	No	Yes	Stores system date and time and noncritical data.	RTC battery backed-up CMOS is programmed using the Computer Setup (BIOS), or changing the Microsoft Windows date and time.	This memory is not write-protected.
Controller (NIC) EEPROM	64 KBytes (not customer accessible)	No	Yes	Stores NIC configuration and NIC firmware.	NIC EEPROM is programmed using a utility from the NIC vendor that can be run from DOS.	A utility is required to write data to this memory and is available from the NIC vendor. Writing data to this ROM in an inappropriate manner will render the NIC non-functional.
DIMM Serial Presence Detect (SPD) configuration data	256 Bytes per memory board, 128 Bytes programmable (not customer accessible)	No	Yes	Stores memory board information.	DIMM SPD is programmed by the memory vendor.	Data cannot be written to this memory when the board is installed in a PC. The specific write-protection method varies by memory vendor.
System BIOS	9 MBytes	Yes	Yes	Stores system BIOS code and PC configuration data.	System BIOS code is programmed at the factory. Code is updated when the system BIOS is updated. Configuration data and settings are input using the Computer Setup (BIOS) or a custom utility.	**NOTE:** Writing data to this ROM in an inappropriate manner can render the PC non-functional. A utility is required for writing data to this memory and is available on the HP website; go to http://www.hp.com/support, and select your country. Select **Drivers & Downloads**, and then

Nonvolatile memory type	Amount (Size)	Does this memory store customer data?	Does this memory retain data when power is removed?	What is the purpose of this memory?	How is data input into this memory?	How is this memory write-protected?
						follow the on-screen instructions.
Intel Management Engine Firmware (present in only specific ZBook and EliteBook models. For more information, go to http://www.hp.com/support, and select your country. Select **Drivers & Downloads**, and then follow the on-screen instructions.)	1.5 MBytes or 7 MBytes	Yes	Yes	Stores Management Engine Code, Settings, Provisioning Data and iAMT third-party data store.	Management Engine Code is programmed at the factory. Code is updated via Intel secure firmware update utility. Unique Provisioning Data can be entered at the factory or by an administrator using the Management Engine (MEBx) setup utility. The third-party data store contents can be populated by a remote management console or local applications that have been registered by an administrator to have access to the space.	The Intel chipset is configured to enforce hardware protection to block all direct read/write access to this area. An Intel utility is required for updating the firmware. Only firmware updates digitally signed by Intel can be applied using this utility.
Bluetooth flash (select products only)	2 Mbit	No	Yes	Stores Bluetooth configuration and firmware.	Bluetooth flash is programmed at the factory. Tools for writing data to this memory are not publicly available but can be obtained from the silicon vendor.	A utility is required for writing data to this memory and is made available through newer versions of the driver whenever the flash requires an upgrade.
802.11 WLAN EEPROM	4 Kbit to 8 Kbit	No	Yes	Stores configuration and calibration data.	802.11 WLAN EEPROM is programmed at the factory. Tools for writing data to this memory are not made public.	A utility is required for writing data to this memory and is usually not made available to the public unless a firmware upgrade is necessary to address a unique issue.
Webcam (select products only)	64 Kbit	No	Yes	Stores webcam configuration and firmware.	Webcam memory is programmed using a utility from the device manufacturer that can be run from Windows.	A utility is required for writing data to this memory and is usually not made available to the public unless a firmware upgrade is necessary to address a unique issue.
Fingerprint reader (select products only)	512 KByte flash	Yes	Yes	Stores fingerprint templates.	Fingerprint reader memory is programmed by user enrollment in HP ProtectTools Security Manager.	Only a digitally signed application can make the call to write to the flash.

Questions and answers

1. **How can the BIOS settings be restored (returned to factory settings)?**

IMPORTANT: Restore defaults does not securely erase any data on your hard drive. See question and answer 6 for steps to securely erase data.

Restore defaults does not reset the Custom Secure Boot keys. See question and answer 7 for information about resetting the keys.

a. Turn on or restart the computer, and then press esc while the “Press the ESC key for Startup Menu” message is displayed at the bottom of the screen.

b. Select **Main**, and then select **Restore defaults**.

c. Follow the on-screen instructions.

d. Select **Main**, select **Save Changes and Exit**, and then follow the on-screen instructions.

2. **What is a UEFI BIOS, and how is it different from a legacy BIOS?**

The Unified Extensible Firmware Interface (UEFI) BIOS is an industry-standard software interface between the platform firmware and an operating system (OS). It is a replacement for the older BIOS architecture, but supports much of the legacy BIOS functionality.

Like the legacy BIOS, the UEFI BIOS provides an interface to display the system information and configuration settings and to change the configuration of your computer before an OS is loaded. BIOS provides a secure run-time environment that supports a Graphic User Interface (GUI). In this environment, you can use either a pointing device (Touchscreen, TouchPad, pointing stick, or USB mouse) or the keyboard to navigate and make menu and configuration selections. The UEFI BIOS also contains basic system diagnostics.

The UEFI BIOS provides functionality beyond that of the legacy BIOS. In addition, the UEFI BIOS works to initialize the computer’s hardware before loading and executing the OS; the run-time environment allows the loading and execution of software programs from storage devices to provide more functionality, such as advanced hardware diagnostics (with the ability to display more detailed system information) and advanced firmware management and recovery software.

HP has provided options in Computer Setup (BIOS) to allow you to run in legacy BIOS, if required by the operating system. Examples of this requirement would be if you upgrade or downgrade the OS.

3. **Where does the UEFI BIOS reside?**

The UEFI BIOS resides on a flash memory chip. A utility is required to write to the chip.

4. **What kind of configuration data is stored on the DIMM Serial Presence Detect (SPD) memory board? How would this data be written?**

The DIMM SPD memory contains information about the memory board, such as size, serial number, data width, speed/timing, voltage, and thermal information. This information is written by the board manufacturer and stored on an EEPROM. This EEPROM cannot be written to when the memory board is installed in a PC. Third-party tools do exist that can write to the EEPROM when the memory board is not installed in a PC. Various third-party tools are available to read SPD memory.

5. **What is meant by “Restore the nonvolatile memory found in Intel-based system boards”?**

This message relates to clearing the Real Time Clock (RTC) CMOS memory that contains PC configuration data.

6. **How can the BIOS security be reset to factory defaults and data erased?**

IMPORTANT: Resetting will result in the loss of information.

These steps will not reset Custom Secure Boot Keys. See question and answer 7 for information about resetting the keys.

a. Turn on or restart the computer, and then press esc while the “Press the ESC key for Startup Menu” message is displayed at the bottom of the screen.

b. Select **Main**, and then select **Reset BIOS Security to Factory Default**.

c. Follow the on-screen instructions.

d. Select **Main**, select **Save Changes and Exit**, and then follow the on-screen instructions.

7. **How can the Custom Secure Boot Keys be reset?**

Secure Boot is a feature to ensure that only authenticated code can start on a platform. If you enabled Secure Boot and created Custom Secure Boot Keys, simply disabling Secure Boot will not clear the keys. You must also select to clear the Custom Secure Boot Keys. Use the same Secure Boot access procedure you used to create the Custom Secure Boot Keys, but make the selection to clear or delete all Secure Boot Keys.

a. Turn on or restart the computer, and then press esc while the “Press the ESC key for Startup Menu” message is displayed at the bottom of the screen.

b. Select the **Security** menu, select **Secure Boot Configuration**, and then follow the on-screen instructions.

c. At the **Secure Boot Configuration** window, select **Secure Boot**, select **Clear Secure Boot Keys**, and then follow the on-screen instructions to continue.

Using HP Sure Start (select models only)

Select computer models are configured with HP Sure Start, a technology that continuously monitors your computer's BIOS for attacks or corruption. If the BIOS becomes corrupted or is attacked, HP Sure Start restores the BIOS to its previously safe state, without user intervention. Those select computer models ship with HP Sure Start configured and enabled. HP Sure Start is configured and already enabled so that most users can use the HP Sure Start default configuration. The default configuration can be customized by advanced users.

To access the latest documentation on HP Sure Start, go to http://www.hp.com/support, and select your country. Select **Drivers & Downloads**, and then follow the on-screen instructions.

C Specifications

	Metric	U.S.
Computer dimensions		
Width	21.6 cm	8.5 in
Depth	55.1 cm	21.7 in
Height	44.5 cm	17.5 in
Weight	31.7kg maximum, 22.4 kg minimum, 23.7 kg typical (exact weights depend on configuration)	70.0 lbs maximum, 49.4 lbs minimum, 52.2 lbs typical (exact weights depend on configuration)
Temperature Range		
Operating	5° to 35°C	40° to 95°F
Nonoperating	-40° to 60°C	-40° to 140°F
NOTE: The operating temperature is derated 1.0° C per 300 m (1000 ft) when used above 1524m (5000 ft) above sea level; no direct sustained sunlight. Maximum rate of change is 10° C/hr. The upper limit may be limited by the type and number of options installed.		
Relative Humidity (noncondensing)		
Operating	10-90%	10-90%
Nonoperating (38.7°C max wet bulb)	5-95%	5-95%
Maximum Altitude (unpressurized)		
Operating (with solid-state drives)	5,000 m	16,404 ft
Operating (with hard drives)	3,048 m	10,000 ft
Nonoperating	15,240 m	50,000 ft
Power Supply 1	1125W / 1275W* / 1450W*	
Operating voltage range	90-269 VAC	
Rated voltage frequency range	100-127 VAC @ 50-60 Hz, 200-240 VAC @ 50-60 Hz, 118 VAC @ 400 Hz	
Operating line frequency range	100-127 VAC @ 47-66 Hz, 200-240 VAC @ 47-66 Hz, 118 VAC @ 393-407 Hz	
	12A @ 100-127 VAC, 10A @ 200-240 VAC, 12A @ 118 VAC	
Standard Efficiency	180 W, 250 W active PFC	
High Efficiency	1000 W 90% efficiency, custom power supply (wide-ranging, active PFC)	
Rated Input Current	1000 W	
	12A @ 100-127 VAC, 6.3A @ 200-240 VAC	
	12A @ 118 VAC	
Power Supply 2	1450W / 1550W* / 1700W*	

	Metric	U.S.
Operating voltage range	90-269 VAC	
Rated voltage frequency range Operating line frequency range	100-127 VAC @ 50-60 Hz, 200-240 VAC @ 50-60 Hz, 118 VAC @ 400 Hz 100-127 VAC @ 47-66 Hz, 200-240 VAC @ 47-66 Hz, 118 VAC @ 393-407 Hz 16A @ 100-127 VAC, 10A @ 200-240 VAC, 16A @ 118 VAC	
Power supply options	1125 W or 1450 W active PFC	
Efficiency	87/90/87% efficient at 20/50/100% load (@ 115V)	
	* = Input voltage restriction	

D Linux technical notes

HP offers a variety of Linux solutions for HP workstation customers:

- HP certifies and supports Ubuntu on some HP workstations.
- HP supports Red Hat Enterprise Linux (RHEL) on HP workstations.
- HP certifies and supports SUSE Linux Enterprise Desktop (SLED) on HP workstations.

For Linux setup and restore procedures, see the user guide for your workstation at http://www.hp.com/support/workstation_manuals.

- System RAM on page 105
- Audio on page 106
- Network cards on page 106
- Hyper-Threading Technology on page 106
- NVIDIA Graphics Workstations on page 107

NOTE: After you set up the operating system, make sure that the latest BIOS, drivers, and software updates are installed.

CAUTION: Do not add optional hardware or third-party devices to the workstation until the operating system is successfully installed. Adding hardware might cause errors and prevent the operating system from installing correctly.

System RAM

HP supports different amounts of total RAM in various HP workstations, based on the number of hardware DIMM slots and the capabilities of the system. The total memory supported for each configuration is listed in the *Hardware Support Matrix for HP Linux Workstations* at http://www.hp.com/support/linux_hardware_matrix.

Audio

All HP workstations come with built-in audio hardware. The audio hardware is supported by the *Advanced Linux Sound Architecture* (ALSA) drivers included with all modern Linux distributions.

The audio hardware provides basic playback and recording features. The ability to simultaneously play audio from multiple sources, such as applications and CDs, is provided in the ALSA driver that provides audio mixing. The performance of software audio mixing and playback is greatly improved in ALSA version 1.0.13 and later.

After the driver is installed, the optional NVIDIA and AMD graphics cards that are supported in HP workstations also provide audio functionality over HDMI. The signal can be passed through the DisplayPort connector to a monitor with audio capabilities. The vendor driver must be installed. Such a configuration might present two audio hardware choices. If you do not hear sound through the speakers, one possible reason is that the graphics card (default) is selected for audio output instead of the DisplayPort. Check the audio settings (for example, **Sound** in gnome-control-center).

In some systems, embedded Intel HD graphics may also present a similar HDMI audio device that can be used through the DisplayPort interface. No proprietary driver is needed for this device, just a sufficiently recent kernel.

Network cards

All HP workstations include one or two integrated network interface controllers (NICs). Some support optional NICs. Most Linux distributions have drivers for these interfaces.

Hyper-Threading Technology

The Z Series Workstations support Hyper-Threading Technology (HTT), an Intel technology that improves processor performance by enabling the processor to simultaneously perform multiple tasks. The operating system treats an HTT-enabled processor as two virtual processors and shares the workload between them when possible. This feature can be used only if the operating system support multiple processors and is s pecifically optimized for HTT.

To enable HTT:

1. During startup, press F10 to enter Computer Setup (F10) Utility.
2. Select **Advanced > System Options**.
3. Set **Intel Hyperthreading** to **Enable**, and then press F10 to exit the menu.
4. Select **Main > Save Changes and Exit**.
5. Restart the system to enable HTT.

NOTE: On most recent Linux distributions, the kernel automatically detects that HTT is enabled and works correctly.

NVIDIA Graphics Workstations

Some workstation configurations come with NVIDIA Quadro graphics hardware. HP recommends the use of NVIDIA drivers for best results on Linux systems.

HP provides recommended versions of the drivers with RPM-compatible installers for RHEL and SLED distributions. These are available from the HP Installer Kit for Linux and from workstation driver repositories on hp.com. When HP installers are used, their contents and documentation links are located in the /opt/hp/nvidia folder.

When installing Linux on a workstation that contains an NVIDIA card, administrators should select a VESA-compatible driver to avoid the instability that is experienced with some open-source versions of the Nouveau and DRM drivers.

Open-source versions of Nouveau drivers and NVIDIA drivers cannot coexist in the same runtime environment because they use the same hardware resources. If administrators create their own Linux environments using NVIDIA drivers but choose not to use HP-packaged versions, HP recommends that they manually append the following boot loader parameters to properly suppress the Nouveau driver at runtime (grub example below):

```
kernel /vmlinuz ... rdblacklist=nouveau nouveau.modeset=0
```

This action is applied by HP installers but must be applied/restored under other circumstances.

To customize display characteristics and resolutions when the computer is using an NVIDIA driver, execute the following command:

```
/usr/bin/nvidia-settings
```

To create and manipulate the /etc/X11/xorg.conf file, execute:

```
/usr/bin/nvidia-xconfig
```

Index

A
access panel
  locked 51
  removal and replacement 22
access panel handle 4
access panel lock 4
audible codes 78
audio problems 60
audio-in jack 2, 3, 5
audio-out jack 2, 3, 5

B
battery
  disposal 15
battery replacement 94
beep codes 78
booting options
  Full Boot 73
  Quick Boot 73
buttons
  power 2, 3, 5

C
cautions
  AC power 10
  cables 15
  electrostatic discharge 10
  keyboard cleaning 13
  keyboard keys 14
changing a Power-On password 83
changing a Setup password 83
cleaning
  computer 13
  safety precautions 13
CMOS
  backing up 80
components
  front panel 2
  left-side 4
  rear panel 5
computer
  serial number 6
computer cleaning 13
Computer Setup
  access problem 50
connectors
  power 5
Customer Support 48

D
deleting a Power-On password 83
deleting a Setup password 83
disassembly preparation 17
drive cage
  removal and replacement 23
drive light 2, 3

E
electrostatic discharge (ESD) 10
  preventing damage 11
error
  codes 73, 78
  messages 73
Ethernet port 5

F
F10 Setup
  access problem 50
flash drive problems 70
flashing LEDs 78
front bezel
  removal and replacement 19
front card guide and fans
  removal and replacement 31
front panel components 2
front panel problems 70

G
general problems 50
grounding methods 11

H
hard drive
  proper handling 15
  SATA characteristics 16
hard drive problems 53
hardware installation problems 65
headphone jack 2, 3, 5
heat sink
  removal and replacement 34
helpful hints 49
HP Sure Start 102

I
I/O assembly
  removal and replacement 29
installing
  battery 94
interior covers
  removal and replacement 24
interior lower cover
  removal and replacement 24
interior upper cover
  removal and replacement 24
internal PCIe bracket
  removal and replacement 27
Internet access problems 71

J
jacks
  audio-in 2, 3, 5
  audio-out 2, 3, 5
  headphone 2, 3, 5
  microphone 2, 3, 5
  network 5
  network (AMT enabled) 5
  PS/2 keyboard 5
  PS/2 mouse 5
  RJ-45 5
  RJ-45 (AMT enabled) 5

K
keyboard
  cleaning 13
keyboard problems 64

L
left-side components 4
lights
  drive 2, 3

M
media card reader
  problems 55

memory
nonvolatile 97
problems 68
volatile 97
memory card reader 2, 3
memory fan
removal and replacement 28
microphone jack 2, 3, 5
monitor problems 57
mouse
problems 64

N
network jack 5
network jack (AMT enabled) 5
network problems 66
nonvolatile memory 97
numeric error codes 73

O
operating guidelines 12
optical drive
location 2, 3
removal and replacement 26
overheating, prevention 12

P
password
clearing 80
power-on 80
setup 80
passwords 83
PCIe slot 5
ports
Ethernet 5
serial 5
USB 3.x SuperSpeed 2, 3, 5
USB 3.x SuperSpeed with HP Sleep and Charge 2, 3
USB Type-C 2
POST error messages 73
power button 2, 3, 5
power connector 5
power problems 53
power supply
operating voltage range 103
removal and replacement 17, 21
Power-On password 83
power-on password 80
printer problems 62
problems
audio 60
Computer Setup 50
F10 Setup 50
flash drive 70
front panel 70
general 50
hard drive 53
hardware installation 65
Internet access 71
keyboard 64
Media Card Reader 55
memory 68
monitor 57
mouse 64
network 66
power 53
printer 62
software 72
processor
removal and replacement 35
PS/2 keyboard jack 5
PS/2 mouse jack 5

R
rear fan
removal and replacement 25
rear panel components 5
removal and replacement
access panel 22
drive cage 23
front bezel 19
front card guide and fans 31
heat sink 34
I/O assembly 29
interior covers 24
interior lower cover 24
interior upper cover 24
internal PCIe bracket 27
memory fan 28
optical drive 26
power supply 17, 21
processor 35
rear fan 25
right panel 20
storage device 23
system board 32
top cover 18
removing
battery 94
removing personal data from volatile system memory 97
resetting
CMOS 80
password jumper 80
right panel
removal and replacement 20
RJ-45 jack 5
RJ-45 jack (AMT enabled) 5

S
safety and comfort 48
safety precautions
cleaning 13
SATA
connectors on system board 16
hard drive characteristics 16
screws, correct size 14
security cable slot 5
serial port 5
service considerations 14
Setup password 83
setup password 80
software
problems 72
servicing computer 14
specifications
computer 103
static electricity 10
storage device
removal and replacement 23
system board
removal and replacement 32
SATA connectors 16
system memory, removing personal data from volatile 97

T
temperature control 12
tools, servicing 14
top cover
removal and replacement 18

U
USB 3.x SuperSpeed port 2, 3, 5
USB 3.x SuperSpeed port with HP Sleep and Charge 2, 3
USB Type-C port 2

V
ventilation, proper 12

W
Windows 10
backup and restore 89