INSTRUCTION BOOK FOR

Da-Lift Projector Lift 10M, 15M, 15, 19, 19L

DA-LITE®

Important Safety Instructions

When using your video equipment, basic safety precautions should always be followed, including the following:

1. Read and understand all instructions before using.
2. Position the cord so that it will not be tripped over, pulled, or contact hot surfaces.
3. If an extension cord is necessary, a cord with a current rating at least equal to that of the appliance should be used. Cords rated for less amperage than the appliance may overheat.
4. To reduce the risk of electric shock, do not disassemble this appliance. Contact an authorized service dealer when repair work is required. Incorrect reassembly can cause electric shock when the appliance is used subsequently.
5. The use of an accessory attachment not recommended by the manufacturer may cause a risk of fire, electric shock, or injury to persons.

Save These Instructions

This unit must be installed in accordance with the requirements of the Local Building Codes, the Canadian Electrical Code (CEC), CAN/CSA C22.1 and the National Electric Code (NEC) NFPA 70.

Pre-Installation

1. Carefully unpack Da-Lift projector lift.
2. Make sure to recheck measurements of projector lift location before installation.

Suggested Methods Of Installation

1. Mounting Da-Lift Projector Lift between joists.

   Install the joists at the proper height and width to fit the Da-Lift you are installing. See Figure 1.

   NOTE: The Da-Lift must be installed on top of the joists. Be sure to leave access from above for installation.

When the joists are properly installed, and secured in place, slide the Da-Lift in position. Bolt the two brackets (1-1/2" x 19") to the frame. Lower the unit onto the joists and secure in place. Additional bracing may be required, based on construction.

NOTE: Da-Lift projector lift must be installed level!

Model	Lifting Capacity	Width A	Height B	Depth C	Height D	DIm. E	Dim. F
Da-Lift 10M	40 lbs.	22-⅝"	15"	22"	4-½"	24-⅛"	14"
Da-Lift 15M	40 lbs.	22-⅝"	20"	22"	9-½"	24-⅛"	14"
Da-Lift 15	300 lbs.	30-¾"	20"	34"	9-½"	32-¼"	16-¼"
Da-Lift 19	300 lbs.	32-¾"	24"	38"	13-½"	34-¼"	16-¼"
Da-Lift 19L	300 lbs.	42-¾"	24"	48"	13-½"	44-¼"	16-¼"

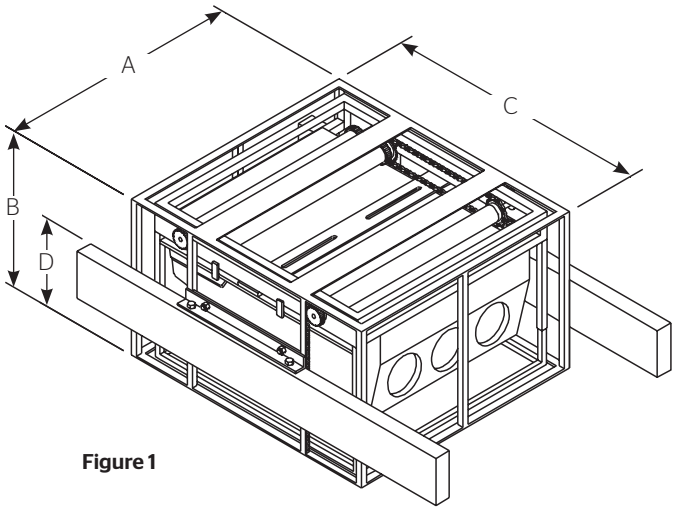

Figure 1

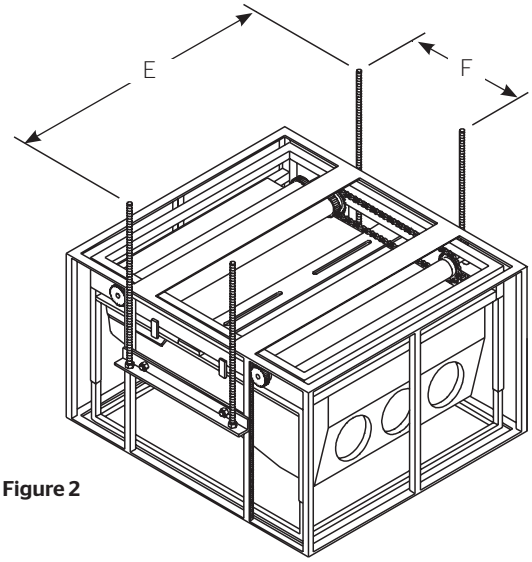

Figure 2

2. Mounting Da-Lift Projector Lift using 1/2" diameter threaded rods. Secure four 1/2" diameter threaded rods to the ceiling at the dimensions shown. See Figure 2, "E" and "F". Install the mounting bracket (1-1/2" x 19") to each side of Da-Lift with 1/2" diameter bolts, flat washers and nuts. Attach one nut on each rod and run the nut up to the desired height.

Slide Da-Lift projector lift up with all (4) four threaded rods into the mounting brackets. Install 1/2" nuts under the mounting brackets. Adjust the frame to the proper height and level with bottom nuts on the rod. Lock the mounting brackets in place with the nuts on the top of each rod. Frame must be level and solid. Additional bracing may be required, based on construction.

Electrical Wiring

1. Install electrical hook up that applies to your unit. Make sure to review your Electrical Installation Checklist and wiring diagram (see Figure 3) for 120-volt switch, 220/240-volt switch, or DRC low voltage control.

   NOTE: Da-Lift projector lift has been internally wired at Da-Lite. External wiring is completed by installer conforming to local and national codes. Be sure the wires are long enough for the Da-Lift to go up and down.

2. Test installation by carefully running Da-Lift **"up"** and **"down"** several times. Be prepared to stop the Da-Lift. Duty cycle is three (3) minutes ON and three (3) minutes OFF.

3. Make sure Da-Lift stops in the up direction flush with the ceiling.

120V Wiring Diagram

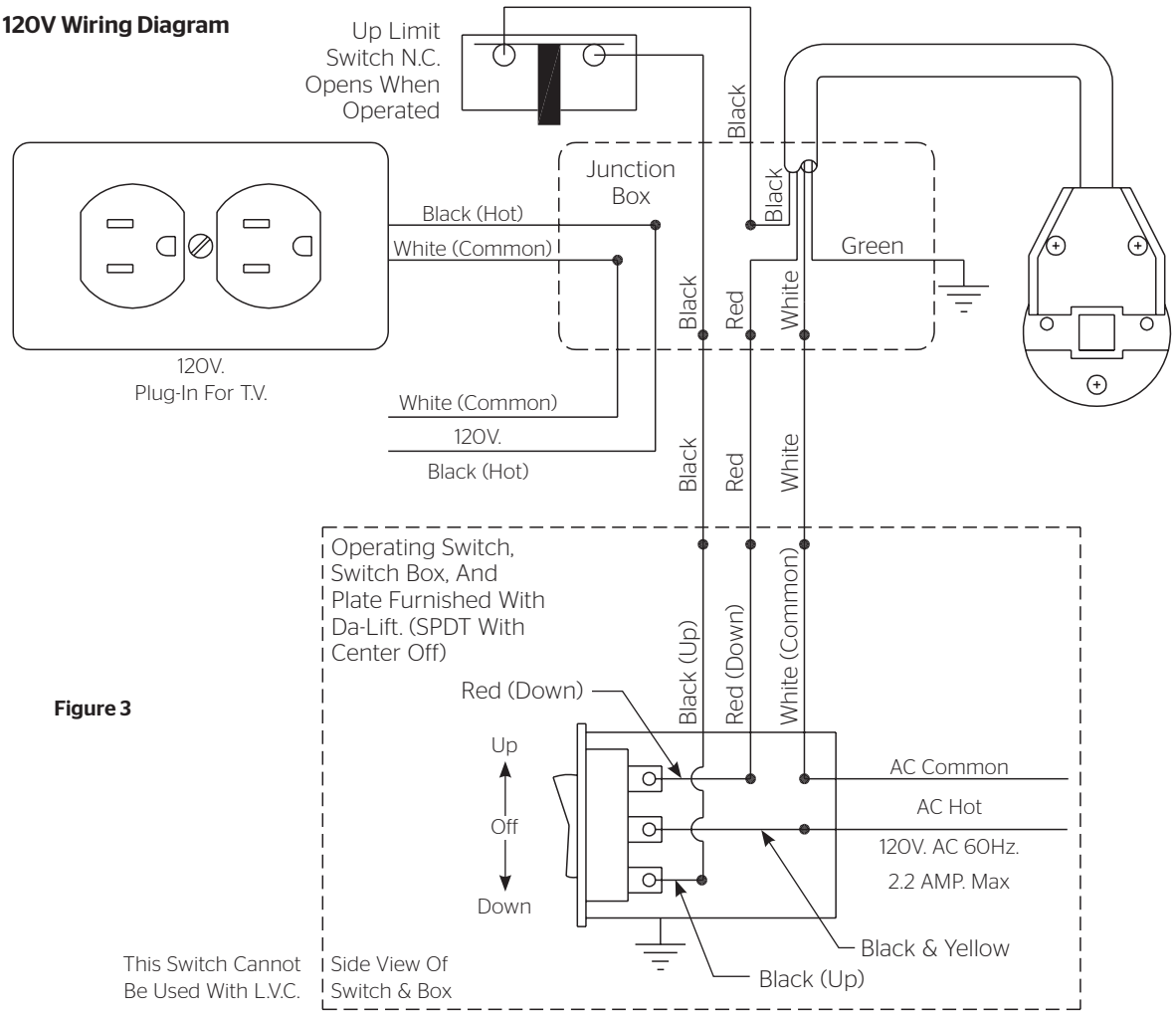

Figure 3

240 Volt Wiring Diagram

Da-lite offers two styles of 240-volt wall switches for standard operation.
Please see wiring diagram included in wall switch box included with screen.

Da-Lift Projector Lift Adjustment

Models 15, 19, 19L

Da-Lift projector lift travel is stopped automatically in the full up and full down positions by limit switches, which have been properly adjusted at the factory. The up limit switch should not be field adjusted. If it is necessary to readjust the down limit switch, proceed in the following manner. See Figure 4. Raise projector lift before adjustment for less drop. Take a small screwdriver or 5/32" hex wrench and insert in yellow switch and turn towards the (-) or clockwise direction. Raise and then lower the Da-Lift and check for proper stopping height. If additional change is necessary, repeat steps until the proper height is set. Check for satisfactory condition by operating unit a few times.

The bottom frame of the Da-Lift is removable and adjustable to ceiling level. Finish the bottom frame to match the ceiling.

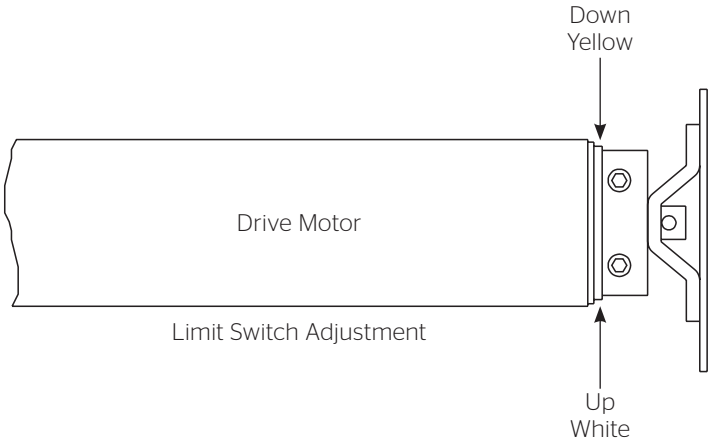

Figure 4

Models 10M, 15M

Use a small screwdriver or 5/32" hex wrench and insert in number 2 switch. Turn clockwise for less drop. Check for proper stopping height. Repeat steps until the proper height is set. See Figure 5.

The bottom frame of the Da-Lift is removable and adjustable to ceiling level. Finish the bottom frame to match the ceiling.

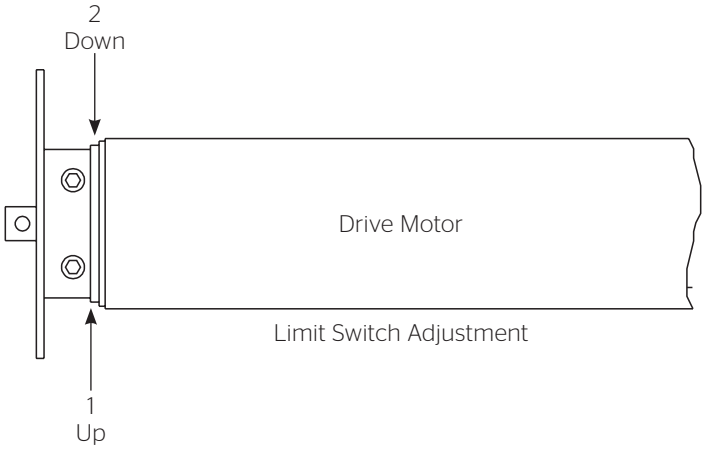

Figure 5

Optional

Install 1-1/2 pipe coupling plate for a projector mount. See Figure 6. Loosen set screws to move Mount Channel. Tighten set screws to hold position.

Figure 6

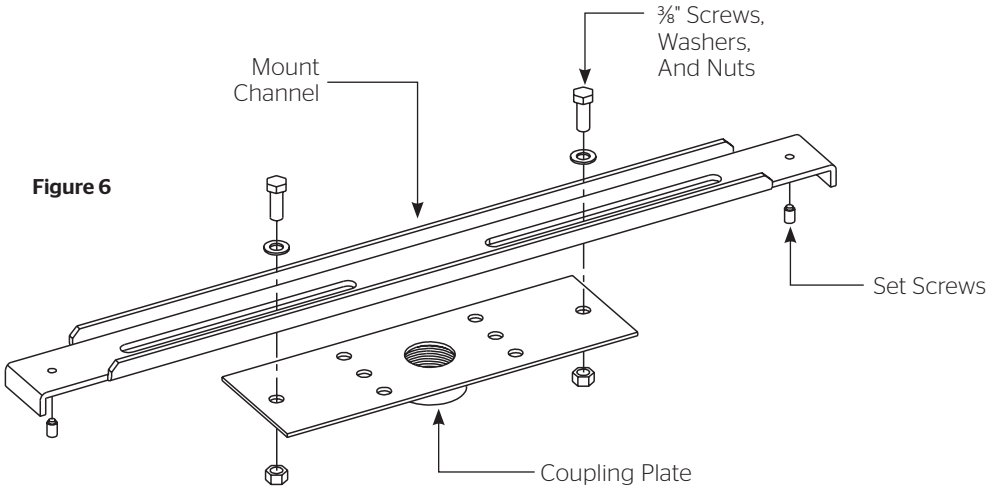

Optional

Finish the Ceiling Tile Plate by attaching a ceiling tile to it, painting it or other finishing ideas. See Figure 7. Use the adjustable Bottom Frame to position the Ceiling Tile Plate level with the ceiling.

Figure 7

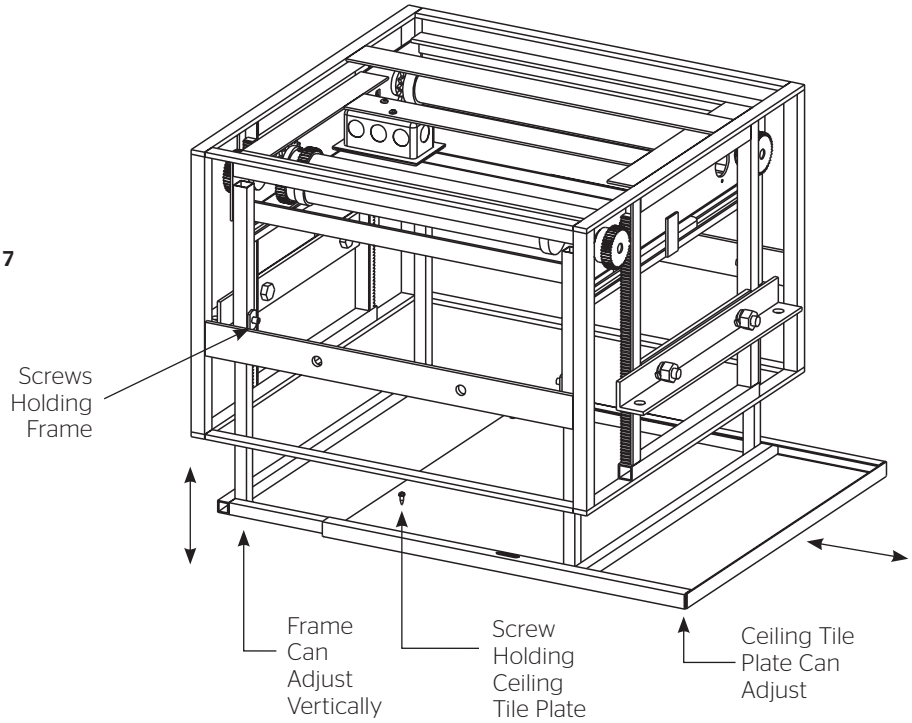

A Milestone AV Technologies Brand

3100 North Detroit Street
Warsaw, Indiana 46582
P: 574.267.8101 or 800.622.3737
F: 574.267.7804 or 877.325.4832
E: info@da-lite.com
www.da-lite.com

DL-0368 6.14
© 2014 Milestone AV Technologies LLC. Printed in U.S.A.

78100