Atrix
ERGOPRO
Backpack Vacuum

OWNER'S MANUAL
Model: VACBPAI

120V 12A, 1400W
ETL US Canada

Atrix International, Inc.
1350 Larc Industrial Blvd.
Burnsville, MN 55337
www.atrix.com
sales@atrix.com
952.894.6154 Tel
800.222.6154 Toll Free Tel

952.894.6256 Fax

IMPORTANT SAFETY INSTRUCTIONS

When using an electrical appliance, basic precaution should always be followed, including the following:
READ ALL INSTRUCTIONS BEFORE USING THIS APPLIANCE

WARNING

To reduce the risk of fire, electric shock, or injury:

1. Do not leave vacuum cleaner when plugged in. Unplug from outlet when not in use and before servicing.
2. Electrical shock may occur if used outdoors or on wet surfaces
3. Do not allow to be used as a toy. Close attention is necessary when used by or near children.
4. Use only as described in this manual. Use only manufacturer's recommended instructions.
5. Do not use with damaged cord or plug. If appliance is not working as it should, has been dropped, damaged, left outdoors, or dropped into water, return it to Atrix International.
6. Do not pull or carry by cord, use cord as a handle, close a door on cord, or pull cord around sharp edges of corners. Do not run appliance over cord. Keep cord away from heated surfaces.
7. Do not unplug by pulling on cord. To unplug, grasp plug, not the cord.
8. Do not handle plug or appliance with wet hands.
9. Do not put any object into openings. Do not use with any opening blocked; keep free of dust, lint, hair, and anything that may reduce airflow.
10. Keep hair, loose clothing, fingers and all body parts away from openings and moving parts.
11. Do not pick up anything that is burning or smoking such as cigarettes, matches or hot ashes.
12. Do not use without filter in place.
13. Turn off all controls before unplugging.
14. Use extra care when cleaning on stairs.
15. Do not use to pick up any liquids, including flammable or combustible liquids such as gasoline or use in areas where they may be present.
16. Connect to a properly grounded outlet only.
17. This appliance is not intended for use by persons (including children) with reduced physical, sensory or mental capabilities, or lack of experience and knowledge, unless they have been given supervision or instruction concerning use of the appliance by a person responsible for their safety. Children should be supervised to ensure that they do not play with the appliance.

SAVE THESE INSTRUCTIONS!

GETTING TO KNOW YOUR Ergo Series VACUUM

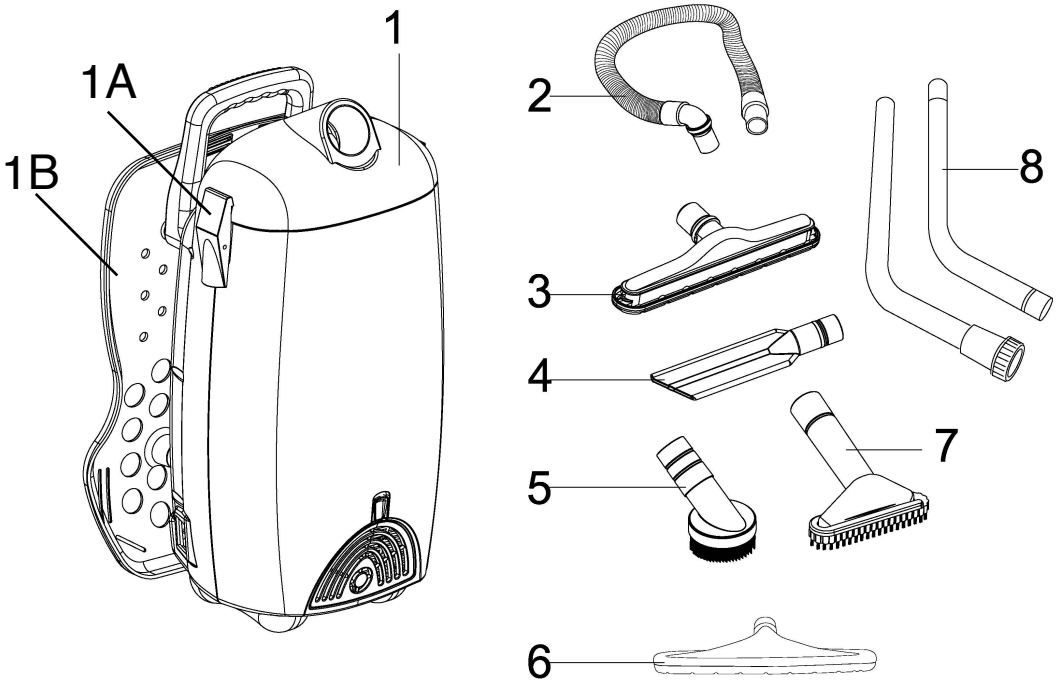

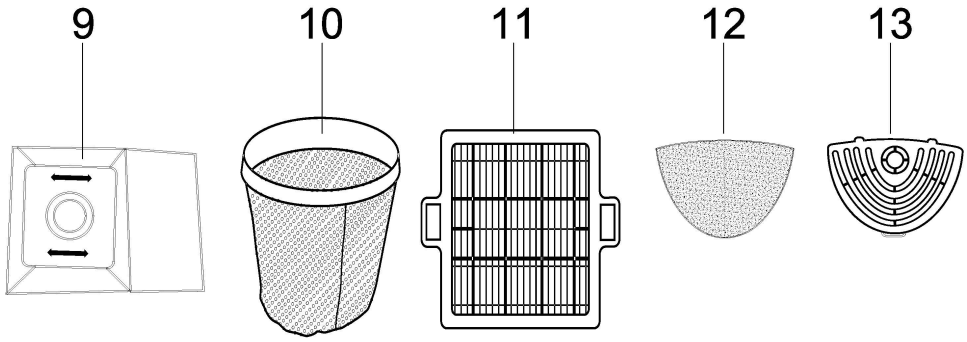

1. Replacement 1.5” Lid Grey (VACBPAILIDG)
1A. Replacement Latch (BP34-38)
1B Replacement Handle, Webbing and Harness Assembly (VACBPHARNESS)
2. Replacement Hose (VACBPAI39)
3. Floor Tool w/Scallops (VACBPAI34)
4. Crevice Tool (VACBPAI36)
5. Round Dusting Brush (VACBPAI33)
6. Floor Tool with Bristles (VACBPAI35)
7. Upholstery Tool w/Brush (VACBPAI32)
8. Aluminum Wand (VACBPAI37 “hose end” and VACBPAI38 “utensil end”)
9. HEPA Bag (VACBP6-10P)
10. Reusable Cloth Shake-Out Bag (VACBP8)
11 and 12. HEPA Pre-Motor Filter and Exhaust Filter (BPFILPACK)
13. Exhaust Filter Cover (BP18)

Operating Instructions

<u>Warning</u>: To reduce the risk of electric shock, the power cord must be disconnected from the wall outlet before removing and replacing filters or performing maintenance.

Replacing the HEPA Bag

1. To open the canister lid, pull up the canister lid tabs on each side of the unit and remove canister lid. (Fig.1)
2. Pull the tab on the HEPA bag holder out slightly and flip upwards.(Fig. 2)
3. Holding the HEPA bag in your hand, slide/pull it out of the bag holder and dispose. (Fig. 2)
4. Insert/slide new bag. Cardboard face should rest securely in the bag cover guides.(Fig. 3)



Fig.11

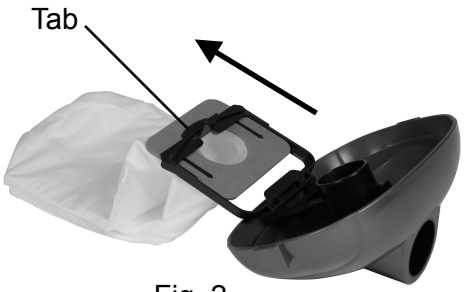

Fig. 2



Fig. 3

Cleaning the Cloth Shake-out Bag

1. Remove the Shake-out bag from the canister. (Fig. 4)
2. As necessary, hand or machine wash the cloth shake-out bag and let it air dry before reinserting it onto canister lip.



Fig. 4

Cleaning the HEPA Pre-motor Filter

1. Press/pinch both tabs and pull upwards on filter.
2. Tap out the contents of the HEPA filter over a garbage can.
3. If necessary, thoroughly rinse the HEPA filter using regular tap water. Then shake off any excess water and allow to dry completely before reinserting it.
4. To reinsert, place filter over the tabs and press down. You should hear two "clicks" if installed correctly. (Fig. 5)

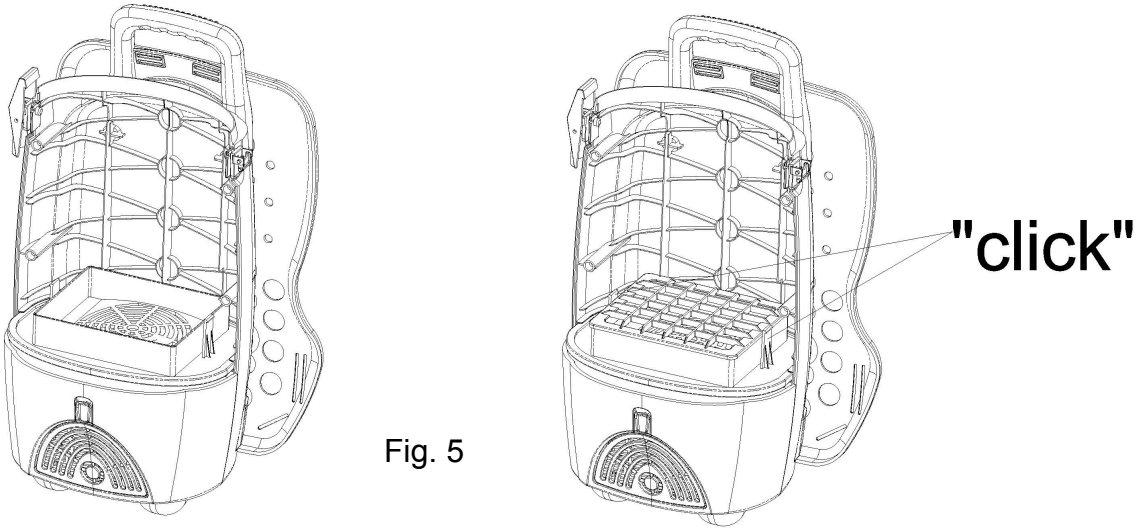

Fig. 5

Caution: The HEPA pre-motor filter will stop most of the tiniest dust particles and airborne allergens from re-entering the air you breathe. In fact, it can stop 99.97% of most particles as small as 0.3 microns. Over time, this HEPA pre-motor filter will accumulate fine dust particles. Clean or replace the HEPA pre-motor when you see a lot of dust and dirt embedded.

Cleaning the Exhaust Filter

1. Pull up and hold the exhaust tab and pull out the exhaust cover. (Fig. 6)
2. Remove the exhaust filter.
3. As necessary, hand or machine wash the cloth filter and let dry before reinserting it.

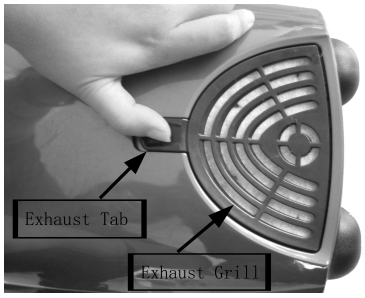

Fig. 6

Assembling Your Vacuum

- Push/press fit the hose into the lid opening. (Fig 7)

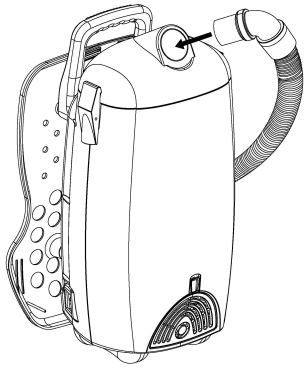

Fig. 7

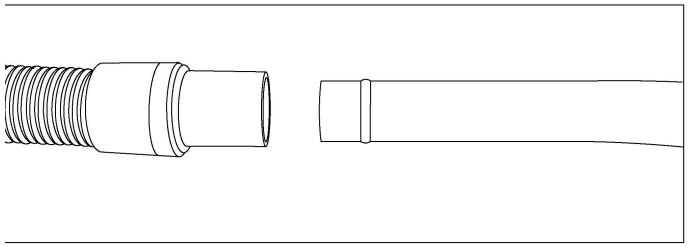

Fig. 8

- To connect the hose and attachment wand, slide the hose over the hose end wand attachment and over the bump by approx. ½". (Fig. 8)
- Take the hose end attachment wand and insert it into the lower attachment wand (utensil end). (Fig.9)

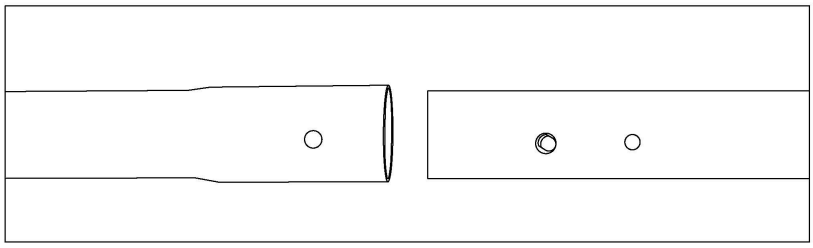

Fig. 9

- Secure the utensil to the end of wand. Align the brass ring with the groove on the floor tool to ensure a secure fit (Fig. 10)

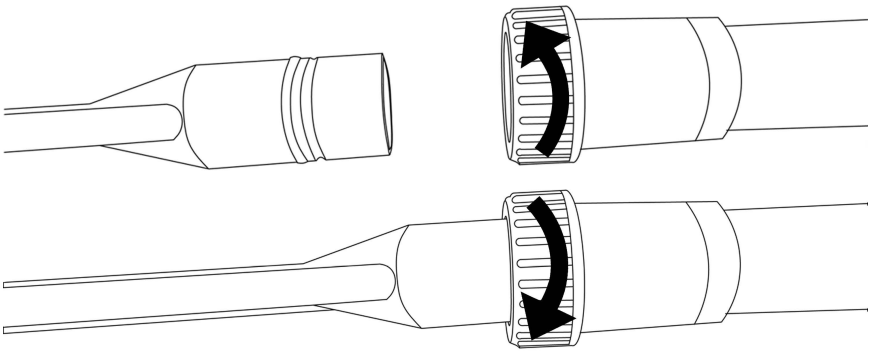

Fig.10

Using Your Vacuum

1. Connect the extension cord to extension cord relief (BP99) (Fig 12) and connect vacuum plug to extension cord. Plug extension cord into the electrical outlet.
2. Connect hose and wand and/or utensil.
3. Correctly place shoulder straps on each shoulder and secure the waist band with hook and loop strips. (Fig. 11)



Fig. 11



Fig. 12

(The Atrix Advantage)

Atrix Ergo Series Commercial Backpack Vacuum WARRANTY INFORMATION

Warranty/Service Information:

Atrix Ergo Series Backpack Vacuum Limited Warranty: To the original purchaser/user of the Atrix Ergo Series Backpack Vacuum, Atrix warrants that the vacuum, filters, utensils, motor, battery or charger will be free of defects in material and manufacture for a period of one (1) year from the date of invoice. Should any item fail during this time period, contact Atrix with the serial number and replacement part(s) request, and Atrix will send no charge replacement part(s), freight collect.

If you do not have the capability of replacing broken items, please contact Atrix for a Service Return Authorization Number and return the product, freight prepaid, to Atrix International. Atrix will repair at no charge and return to you at no charge.

After the one year Atrix Advantage warranty has expired, Atrix will continue to provide replacement parts for sale, or, if you prefer, contact Atrix for a Service Return Authorization number and return the product, freight prepaid, to Atrix International for a service/repair estimate. These remedies are the user's exclusive remedies for breach of this warranty.

Exclusions to warranty coverage: The above warranty will not apply to any special configurations or to any units that have been modified, or damaged by negligence, misuse, accident or failure to follow Atrix's Instruction Manual.

Disclaimer of Warranty: EXCEPT FOR THE IMPLIED WARRANTIES OF TITLE AND AGAINST PATENT INFRINGEMENT, ATRIX MAKES NO OTHER WARRANTIES WITH RESPECT TO THE ATRIX BACKPACK VACUUM CLEANER, EXPRESS OR IMPLIED, INCLUDING BUT NOT LIMITED TO ANY IMPLIED WARRANTY OF MERCHANTABILITY OR FITNESS FOR A PARTICULAR PURPOSE.

Limitation of Liability: ATRIX WILL NOT BE LIABLE UNDER ANY CIRCUMSTANCES FOR ANY COINCIDENTAL, SPECIAL, OR CONSEQUENTIAL DAMAGES OR ECONOMICAL LOSS, BASED UPON BREACH OF WARRANTY, BREACH OF CONTRACT, NEGLIGENCE, STRICT LIABILITY IN TORT OR ANY OTHER LEGAL THEORY, EVEN IF ATRIX HAS BEEN ADVISED OF THE POSSIBILITY OF SUCH DAMAGES INCLUDING, BUT NOT LIMITED TO LOSS OF PROFITS, REVENUE, EQUIPMENT USE, DATA OR INFORMATION OF ANY KIND. THE LIABILITY OF ATRIX SHALL NOT UNDER ANY CIRCUMSTANCE, EXCEPT AS EXPRESSLY PROVIDED HEREIN, EXCEED THE PRICE OF THE ATRIX BACKPACK VACUUM.