Washing Machine

User Manual

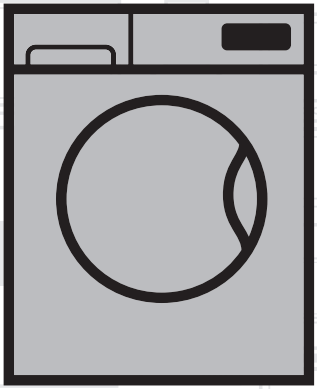

WTG620M2W

EN

Document Number= 2820525985_EN/ 23-05-17.(18:21)

Please read this user manual first!

Dear Customer,

Thank you for prefering a Beko product. We hope that you get the best results from your product which has been manufactured with high quality and state-of-the-art technology. Therefore, please read this entire user manual and all other accompanying documents carefully before using the product and keep it as a reference for future use. If you handover the product to someone else, give the user manual as well. Follow all warnings and information in the user manual.

Remember that this user manual is also applicable for several other models. Differences between models will be identified in the manual.

Explanation of symbols

Throughout this user manual the following symbols are used:

	Important information or useful hints about usage.
	Warning for hazardous situations with regard to life and property.
	Warning for electric shock.
	Recyclable materials.

Do not dispose of the packaging materials together with the domestic or other wastes. Take them to the packaging material collection points designated by the local authorities.

This product was manufactured using the latest technology in environmentally friendly conditions.

TABLE OF CONTENTS

1 General safety instructions 5

1.1 Life and property safety ---- 5
1.2 Children's safety ---- 6
1.3 Electrical safety ---- 6
1.4 Hot surface safety ---- 7

2 Important instructions for the environment 8

2.1 Compliance with WEEE Directive ---- 8
2.2 Package information ---- 8

3 Intended use 8

4 Your product 9

4.1 Overview ---- 9
4.2 Package Contents ---- 10
4.3 Technical specifications ---- 11
4.4 Installation ---- 12
- 4.4.1 Appropriate installation location ---- 12
- 4.4.2 Removing packaging reinforcement ---- 12
- 4.4.3 Removing the transportation locks ---- 13
- 4.4.4 Connecting the water supply ---- 13
- 4.4.5 Connecting the drain hose to the drain ---- 14
- 4.4.6 Adjusting the feet ---- 15
- 4.4.7 Electrical connection ---- 15
- 4.4.8 Initial use ---- 17

4.5 Preparation ---- 18
- 4.5.1 Sorting the laundry ---- 18
- 4.5.2 Preparing laundry for washing ---- 19
- 4.5.3 Things to be done for energy saving ---- 19
- 4.5.4 Loading the laundry ---- 20
- 4.5.5 Correct load capacity ---- 20
- 4.5.6 Using detergent and softener ---- 20
- 4.5.7 Tips for efficient washing ---- 23

4.6 Operating the product ---- 24
- 4.6.1 Control panel ---- 24
- 4.6.2 Preparing the machine ---- 24
- 4.6.3 Programme selection and tips for efficient washing ---- 24
- 4.6.4 Programme and consumption table ---- 25
- 4.6.5 Main programmes ---- 26
- 4.6.6 Additional programmes ---- 26
- 4.6.7 Special programmes ---- 27
- 4.6.8 Speed selection ---- 27
- 4.6.9 Delayed Start ---- 28
- 4.6.10 Starting the programme ---- 28

4.6.11 Child Lock ---- 29
4.6.12 Progress of programme ---- 29
4.6.13 Loading door lock ---- 30
4.6.14 Changing the selections after programme has started ---- 30
4.6.15 Cancelling the programme ---- 31
4.6.16 End of programme ---- 31
4.6.17 Your machine features "Pause Mode". ---- 31
4.7 Maintenance and cleaning ---- 32
4.7.1 Cleaning the detergent drawer ---- 32
4.7.2 Cleaning the loading door and the drum ---- 32
4.7.3 Cleaning the body and control panel ---- 32
4.7.4 Cleaning the water intake filters ---- 33
4.7.5 Draining remaining water and cleaning the pump filter ---- 33

5 Troubleshooting 35

1 General safety instructions

This section includes security instructions which may help prevent the injuries and material damage risks. All kinds of warranties shall be invalid if these instructions are not observed.

1.1 Life and property safety

- Never place the product on a carpet-covered floor. Electrical parts will get overheated since air cannot circulate from under the device. This will cause problems with your product.
- Unplug the product if it is not in use.
- Always have the repairing procedures carried out by an Authorised Service Agent. The manufacturer shall not be held liable for damages that may arise from procedures carried out by unauthorised persons.
- The water supply and draining hoses must be securely fastened and remain undamaged. Otherwise a water leak may occur.
- While there is water inside the product, never open the loading door or remove the filter. Otherwise, risk of flooding and injury from hot water will occur.
- Do not force open the locked loading door. The door can be opened a few minutes after the washing cycle ends. In the case of forcing the loading door to open, the door and the lock mechanism may get damaged.
- Use detergents, softeners and supplements suitable for automatic washing machines only.
- Follow the instructions on the label of textiles and the detergent package.

1.2 Children's safety

- This product can be used by children who are at the age of 8 and over and the people whose physical, sensory or mental skills are not fully developed or who do not have necessary required experience and knowledge as long as they are supervised or trained about the safe use of the product and its risks. Children should not play with the device. Cleaning and maintenance works should not be performed by children unless they are supervised by someone. Children of less than 3 years should be kept away unless continuously supervised.
- Packaging materials may be dangerous for children. Keep packaging materials in a safe place away from reach of children.
- Electrical products are dangerous for children. Keep children away from the product when it is in use. Do not allow them to play with the product. Use the child lock to prevent children from interfering with the product.
- Do not forget to close the loading door when leaving the room where the product is located.
- Store all detergents and additives in a safe place away from the reach of children and close the cover of the detergent container or seal the detergent package.

1.3 Electrical safety

- If the product has a failure, it should not be operated unless it is repaired by an Authorised Service Agent. Risk of electric shock!
- This product is designed to resume operating in the event of powering on after a power interruption. If you wish to cancel the programme, see "Cancelling the programme" section.
- Plug the product into a grounded outlet protected by a 13 A fuse. Do not neglect to have the grounding installation made by a qualified electrician. Our company shall not be liable for any damages that will arise when the product is used without grounding in accordance with the local regulations.
- Do not wash the product by spraying or pouring water onto it! Risk of electric shock!

- Never touch the power cable plug with wet hands! Do not grab the power cord to unplug the machine, always unplug it by holding the socket with one hand, and pulling the plug with the other hand.
- Product should be unplugged during installation, maintenance, cleaning and repair procedures.
- If the power cable is damaged, it must be replaced by the manufacturer, after sales service or a similarly qualified person (preferably an electrician) or someone designated by the importer in order to avoid possible risks.

1.4 Hot surface safety

	While washing the laundry at high temperatures, the loading door glass will get hot. Considering this fact, during the washing operation keep children away from the loading door of the product to prevent them touching it.

2 Important instructions for the environment

2.1 Compliance with WEEE Directive

This product complies with EU WEEE Directive (2012/19/EU). This product bears a classification symbol for waste electrical and electronic equipment (WEEE).

This product has been manufactured with high quality parts and materials which can be reused and are suitable for recycling. Do not dispose of the waste product with normal domestic and other wastes at the end of its service life. Take it to the collection center for the recycling of electrical and electronic equipment. Please consult your local authorities to learn about these collection centres.

Compliance with RoHS Directive:

The product you have purchased complies with EU RoHS Directive (2011/65/EU). It does not contain harmful and prohibited materials specified in the Directive.

2.2 Package information

Packaging materials of the product are manufactured from recyclable materials in accordance with our National Environment Regulations. Do not dispose of the packaging materials together with the domestic or other wastes. Take them to the packaging material collection points designated by the local authorities.

3 Intended use

- This product has been designed for domestic use. It is not for commercial purposes or it should not be used other than its intended use.
- The product must only be used for washing and rinsing of laundry that are marked accordingly.
- The manufacturer waives any responsibility arising from incorrect usage or transportation.
- The service life of your product is 10 years. During this period, original spare parts will be available to operate the appliance properly.

4 Your product

4.1 Overview

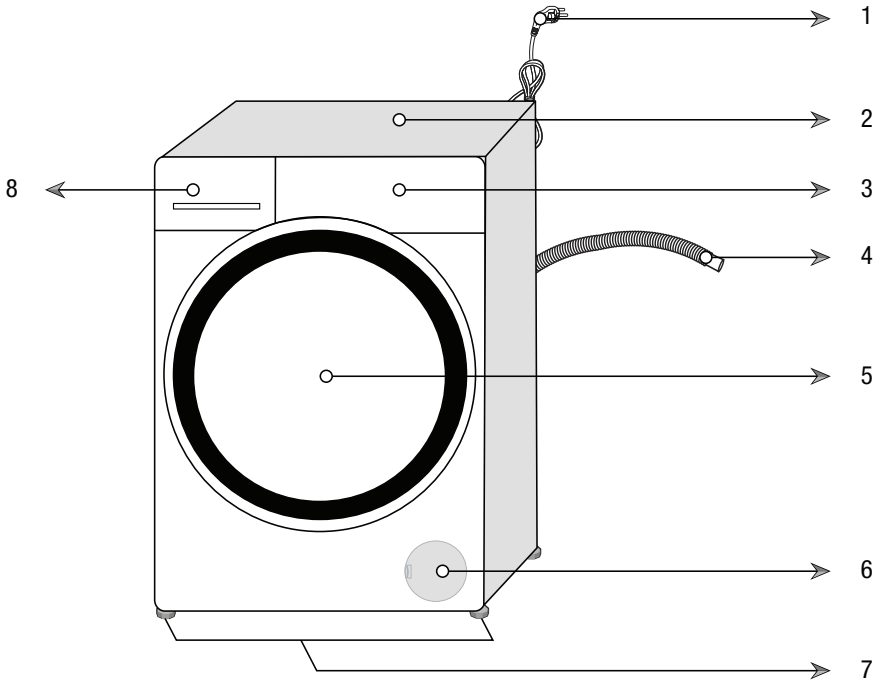

1- Power cable
2- Top panel
3- Control panel
4- Drain hose
5- Loading door
6- Filter cap
7- Adjustable feet
8- Detergent drawer

4.2 Package Contents

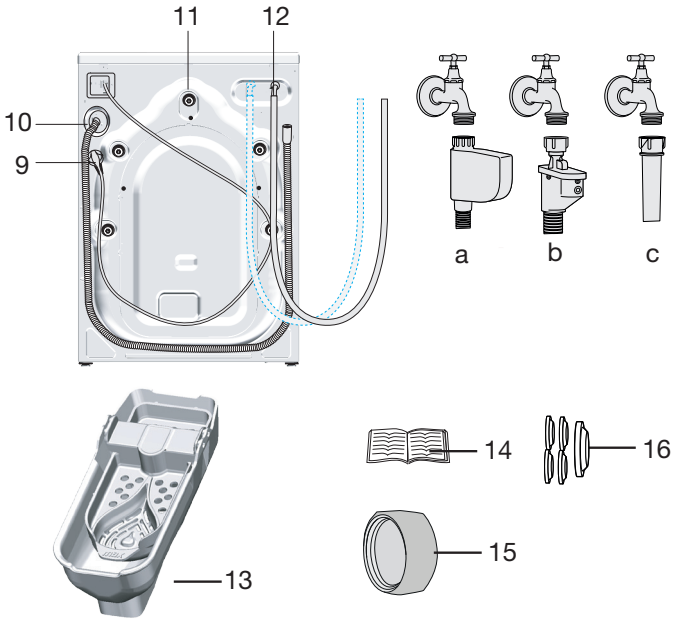

9- Power cable
10- Drain hose
11- Transportation safety bolts*
12- Mains water inlet hose (One of the following filter types is used for the mains hose connection.)
a- Electronic water shut-off
b- Mechanical water shut-off
c- Standard
13- Liquid detergent container**
14- User Manual
15- Blind plug***
16- Plastic plug group

* Number of transportation safety bolts may change depending on the model of your product.
** This may be supplied with the machine depending on the model of your product.
*** It will be supplied if your product has double water inlet.

Figures in this manual are schematic and may not match the product exactly.

4.3 Technical specifications

Complying Commission Delegated Regulation (EU) No 1061/2010	
Supplier name or trademark	Beko
Model name	WTG620M2W
Rated capacity (kg)	6
Energy efficiency class / Scale from A+++ (Highest Efficiency) to D (Lowest Efficiency)	A+++
Annual Energy Consumption (kWh) [1]	152
Energy consumption of the standard 60°C cotton programme at full load (kWh)	0.780
Energy consumption of the standard 60°C cotton programme at partial load (kWh)	0.590
Energy consumption of the standard 40°C cotton programme at partial load (kWh)	0.590
Power consumption in 'off-mode' (W)	0.250
Power consumption in 'left-on mode' (W)	0.750
Annual Water Consumption (l) [2]	8799
Spin-drying efficiency class / Scale from A (Highest Efficiency) to G (Lowest Efficiency)	B
Maximum spin speed (rpm)	1200
Remaining moisture Content (%)	53
Standard cotton programme [3]	Cotton Eco 60°C and 40°C
Programme time of the standard 60°C cotton programme at full load (min)	250
Programme time of the standard 60°C cotton programme at partial load (min)	195
Programme time of the standard 40°C cotton programme at partial load (min)	195
Duration of the left-on mode (min)	N/A
Airborne acoustical noise emissions washing/spinning (dB)	62/77
Built-in	No
Height (cm)	84
Width (cm)	60
Depth (cm)	41.5
Net weight (±4 kg.)	56
Single Water inlet / Double Water inlet • Available	• / -
Electrical input (V/Hz)	230 V / 50Hz
Total current (A)	10
Total power (W)	1550
Main model code	9213

[1] Energy Consumption based on 220 standard washing cycles for cotton programmes at 60°C and 40°C at full and partial load, and the consumption of the low-power modes. Actual energy consumption will depend on how the appliance is used.

[2] Water consumption based on 220 standard washing cycles for cotton programmes at 60°C and 40°C at full and partial load. Actual water consumption will depend on how the appliance is used.

[3] "Standard 60°C cotton programme" and the "standard 40°C cotton programme" are the standard washing programmes to which the information in the label and the fiche relates and these programmes are suitable to clean normally soiled cotton laundry and that they are the most efficient programmes in terms of combined energy and water consumption.

Technical specifications may be changed without prior notice to improve the quality of the product.

4.4 Installation

- Preparation of the location and electrical, tap water and waste water installations at the place of installation is the customer's responsibility.
- Make sure that the water inlet and discharge hoses as well as the power cable are not folded, pinched or crushed while pushing the product into its place after installation or cleaning procedures.
- The manufacturer shall not be held liable for damages that may arise from procedures carried out by unauthorised persons.
- Prior to installation, visually check if the product has any defects on it. If so, do not have it installed. Damaged products cause risks for your safety.

4.4.1 Appropriate installation location

- Place the product on a hard and level floor. Do not put it onto a carpet with high pile or other similar surfaces.
- If the washing machine and dryer are placed on top of each other, their total weight - when loaded- amounts to 180 kilograms. Place the products on a solid and flat floor that has sufficient load carrying capacity!
- Do not place the product on the power cable.
- Do not install the product in environments where the temperature falls below 0 °C.
- Leave a minimum space of 1 cm between the machine and the furniture.
- On a raised floor, do not place the product next to the edge or on a platform.
- Do not place heat sources such as Hobs, Irons, Ovens, etc. on the washing machine and do not use them on the product.

4.4.2 Removing packaging reinforcement

Tilt the machine backwards to remove the packaging reinforcement. Remove the packaging reinforcement that is attached to the ribbon. Do not attempt this operation alone, get help.

4.4.3 Removing the transportation locks

1 Loose all bolts with an appropriate wrench until they turn freely.
2 Remove the transport safety bolts by rocking them slightly.
3 Insert the plastic covers from the bag containing the user manual into the openings on the rear panel.

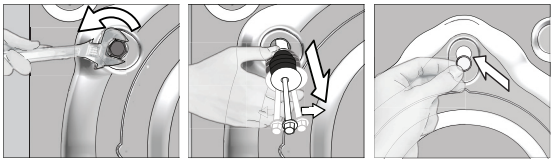

	CAUTION: Remove the transportation safety bolts before operating the washing machine! Otherwise, the product will be damaged.
	Keep the transportation safety bolts in a safe place to reuse when the washing machine needs to be moved again in the future.
	Install the transport safety bolts in the reverse order of the disassembly procedure.
	Never move the product without the transportation safety bolts properly fixed in place!

4.4.4 Connecting the water supply

	The water supply pressure required to run the product is between 1 to 10 bars (0.1 - 1 MPa). It is necessary to have 10 - 80 litres of water flowing from the fully open tap in one minute to have your machine run smoothly. Attach a pressure reducing valve if the water pressure is higher.
	CAUTION: Models with a single water inlet should not be connected to the hot water tap. In such a case the laundry will get damaged or the product will switch to protection mode and will not operate.
	CAUTION: Do not use old or used water inlet hoses on the new product. It may cause stains on your laundry.

1 Tighten the nuts of the hose by hand. Never use a tool when tightening the nuts.
2 When hose connection is completed, check whether there are no leak problems at the connection points by opening the taps fully. If any leaks occur, turn off the tap and remove the nut. Retighten the nut carefully after checking the seal. In order to prevent the water leaks and resultant damages, keep the taps closed when you do not use the product.

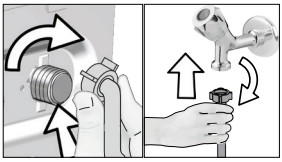

4.4.5 Connecting the drain hose to the drain

- Attach the end of the drain hose directly to the waste water drain, lavatory or bathtub.

CAUTION: Your drain house will be flooded if the hose comes out of its housing during water discharge. Moreover, there is risk of scalding due to high washing temperatures! In order to prevent such situations and make sure that the machine performs water intake and discharge processes without any problem, fix the drain hose securely.

- Connect the drain hose to a minimum height of 40 cm and a maximum height of 100 cm.
- In case the drain hose is elevated after laying it on the floor level or close to the ground (less than 40 cm above the ground), water discharge becomes more difficult and the laundry may come out excessively wet. Therefore, follow the heights described in the figure.

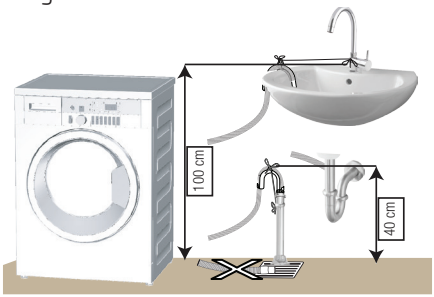

- To prevent the waste water going back into the machine again and to ensure easy drainage, do not immerse the end of the hose into the waste water or do not insert it into the drain for more than 15 cm. If it is too long, cut it short.
- The end of the hose should not be bent, it should not be stepped on and the hose must not be pinched between the drain and the machine.
- If the length of the hose is too short, add an original extension hose. Length of the hose may not be longer than 3.2 m. To avoid water leak failures, the connection between the extension hose and the drain hose of the product must be fitted well with an appropriate clamp as not to come off and/or leak.

4.4.6 Adjusting the feet

CAUTION: In order to ensure that the product operates more silently and vibration-free, it must stand level and balanced on its feet. Balance the machine by adjusting the feet. Otherwise, the product may move from its place and cause crushing and vibration problems.

CAUTION: Do not use any tools to loosen the lock nuts. Otherwise, they will get damaged.

1 Loosen the lock nuts on the feet by hand.
2 Adjust the feet until the product stands in a stable and balanced way.
3. Tighten all lock nuts by hand again.

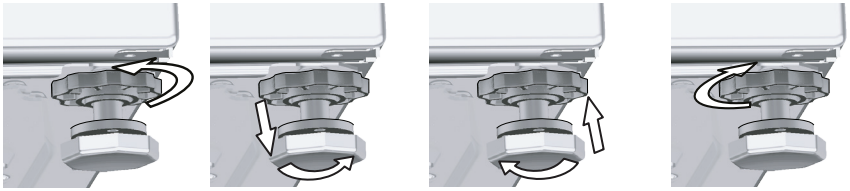

4.4.7 Electrical connection

Connect the product to a grounded outlet protected by a 13 A fuse. Our company shall not be liable for any damages that will arise when the product is used without grounding in accordance with the local regulations.

- Connection must comply with national regulations.
- The wiring for the electrical outlet circuit must be sufficient to meet the appliance requirements. Use of a Groud Fault Circuit Interrupter (GFCI) is recommended.
- Power cable plug must be within easy reach after installation.
- If the current value of the fuse or breaker in the house is less than 13 Amps, have a qualified electrician install a 13 Amp fuse.
- The voltage specified in the "Technical specifications" section must be equal to your mains voltage.
- Do not make connections via extension cables or multi-plugs.

WARNING: Damaged power cables must be replaced by Authorised Service Agents.

Electrical requirements

Before you insert the plug into the wall socket make sure that the voltage and the frequency shown in the rating label corresponds to your electricity supply.
We recommend that this appliance be connected to the mains supply via a suitable switched and fused socket in a readily accessible position.
Should the mains lead of the appliance become damaged or need replacing at any time, it must be replaced by a special purpose made mains lead which can only be obtained from an Authorised Service Agent.

WARNING: This appliance must be earthed

If the fitted moulded plug is not suitable for your socket, then the plug should be cut off and an appropriate plug fitted.
Destroy the old plug, a cut off plug with a bare cord could cause a shock hazard if inserted into a socket elsewhere in the house.
The moulded plug on this appliance incorporates a 13A fuse. Should the fuse need to be replaced an ASTA approved BS1362 fuse of the same rating must be used. Do not forget to refit the fuse cover. In the event of losing the fuse cover, the plug must not be used until a replacement fuse cover has been fitted. Colour of the replacement fuse cover must be the same colour as that visible on the pin face of the plug. Fuse covers are available from any good electrical store.

Important

Fitting a different plug

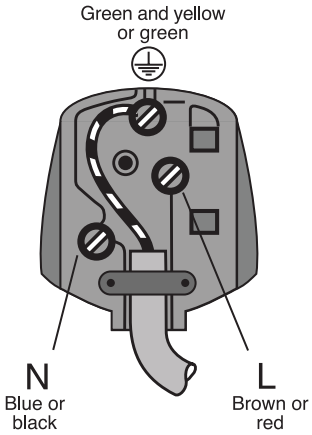

As the colours of the wires in the mains lead of this appliance may not correspond with the coloured markings identifying the terminals on your plug, proceed as follows:

1 Connect the green - yellow or green (earth) wire to the terminal in the plug marked 'E' or with the symbol ⏚ or coloured green and yellow or green.
2 Connect the blue (neutral) wire to the terminal in the plug marked 'N' or coloured black.
3 Connect the brown (live) wire to the terminal in the plug marked 'L' or coloured red.

With the alternative plugs a 13A fuse must be fitted either in the plug or adaptor or in the main fuse box. If in doubt contact a qualified electrician.

Transportation of the product

1. Unplug the product before transporting it.
2. Remove water drain and water supply connections.
3. Drain all water that has remained in the product.
4. Install transportation safety bolts in the reverse order of removal procedure.

	Never move the product without the transportation safety bolts properly fixed in place!
	WARNING: Packaging materials are dangerous to children. Keep packaging materials in a safe place away from reach of the children.

4.4.8 Initial use

Before starting to use the product make sure that the preparations are made which are in line with the "Important Safety and Environment Instructions" and the instructions in the "Installation" section.

To prepare the product for washing laundry, first perform a Drum Cleaning programme. If this is not available in your machine, apply the method which is described in the section 4.7.2.

	Use an anti-limescale suitable for the washing machines.
	Some water might have remained in the product due to the quality control processes in production. It is not harmful for the product.

4.5 Preparation

4.5.1 Sorting the laundry

* Sort laundry according to type of fabric, colour, and degree of soiling and allowable water temperature.
* Always obey the instructions given on the garment tags.

LAUNDRY WASH SYMBOLS

WASH	Symbols for washing on machine	Normal wash	No Iron	Sensitive-Delicate wash	Hand wash	Not washable	No Spin	
	Water temperatures	Maximum	95°C	70°C	60°C	50°C	40°C	30°C
		Symbol(s)	●●●	●●●	●●	●●●	●●	●
DRYING	Drying symbols	Suitable for dryer	No ironing	Sensitive / delicate dry	Do not dry with dryer	Do not dry	Do not dry-clean	
	Drying settings	At any temperature	At high temperature	At medium temperature	At low temperature	Without heating	Hang to dry	Lay to dry
		Hang wet to dry	Lay in shadow to dry	Dry-cleanable				
IRON	Iron							
	Dry or steam		Iron at high temperature	Iron at medium temperature	Iron at low temperature	No ironing	Iron without steam	
	Maximum temperature		200 °C	150 °C	110 °C			
BLEACH	All bleaches are allowed			Bleach (sodium hypochlorite) can be used	Bleach is not allowed	Only bleaches without chlorine are allowed		

4.5.2 Preparing laundry for washing

- Laundry items with metal attachments such as, underwiring , belt buckles or metal buttons will damage the product or break the glass door. Remove the metal pieces or wash the clothes by putting them in a laundry bag or pillow case.
- Take out all substances in the pockets such as coins, pens and paper clips, and turn pockets inside out and brush. Such objects may damage the product or cause noise problem.
- Put small size clothes such as infant's socks and nylon stockings in a laundry bag or pillow case.
- Place curtains in without compressing them. Remove curtain attachment items.
- Fasten zippers, sew loose buttons and mend rips and tears.
- Wash "Machine washable" or "Hand washable" labelled products only with an appropriate programme.
- Do not wash colours and whites together. New, dark coloured cottons release a lot of dye. Wash them separately.
- Tough stains must be treated properly before washing. If unsure, check with a dry cleaner.
- Only use the dyes / colour changers and descaling agents which are appropriate to machine wash. Always follow the instructions on the package.
- Wash trousers and delicate laundry turned inside out.
- Keep laundry items made of Angora wool in the freezer for a few hours before washing. This will reduce pilling.
- Laundry that is subjected to materials such as flour, lime dust, milk powder, etc. must be shaken off before placing into the product. Such dusts and powders on the laundry may build up on the inner parts of the product in time and can cause damage.

4.5.3 Things to be done for energy saving

The following information will help you use the product in an ecological and energy-efficient manner.

- Operate the product in the highest load capacity allowed for the programme you have selected, but do not overload. See, "Programme and consumption table".
- Always follow the instructions on the detergent packaging.
- Wash slightly soiled laundry at low temperatures.
- Use faster programmes for small quantities of lightly soiled laundry.
- Do not use prewash and high temperatures for laundry that is not heavily soiled or stained.
- If you plan to dry your laundry in a dryer, select the highest spin speed recommended during washing process.
- Do not use more detergent than the recommended amount specified on its package.

4.5.4 Loading the laundry

1. Open the loading door.
2. Put the laundry items into the product, do not pack tightly.
3. Push and close the loading door until you hear the locking sound. Ensure that no items are caught in the door. The loading door is locked while a programme is running. The door can only be opened a while after the programme comes to an end. Then you can open the loading door.

4.5.5 Correct load capacity

The maximum load capacity depends on the type of laundry, the degree of soiling and the washing programme desired.
The product automatically adjusts the water amount according to the weight of the laundry put inside it.

WARNING: Comply with the information in the section "Programme and consumption table". When overloaded, the washing performance will drop. Moreover, noise and vibration problems may occur.

4.5.6 Using detergent and softener

When using detergent, softener, starch, fabric dye, bleacher and whitener, descaling agents; read the manufacturer's instructions written on the package and follow the dosages specified. Use a measuring cup if available.

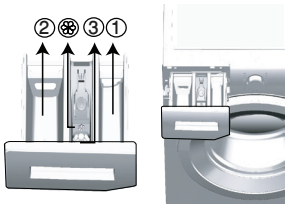

The detergent drawer is composed of three compartments:
- (1) for prewash
- (2) for main wash
- (3) for softener
- (❀) in addition, there is a siphon piece in the softener compartment.

Detergent, softener and other cleaning agents

- Add detergent and softener before starting the washing programme.
- While the washing cycle is in progress, do not leave the detergent dispenser open!
- When using a programme without prewash, do not put any detergent into the prewash compartment (compartment nr. "1").
- In a programme with prewash, do not put liquid detergent into the prewash compartment (compartment nr. "1").
- Do not select a programme with prewash if you are using a detergent bag or dispensing ball. Place the detergent bag or the dispensing ball directly among the laundry in the product.
- If you are using liquid detergent, do not forget to place the liquid detergent container into the main wash compartment (compartment number "2").

Choosing the detergent type

Detergent type to be used depends on the fabric type and colour.

- Use different detergents for coloured and white laundry.
- Wash your delicate clothes only with special detergents (liquid detergent, wool shampoo, etc.) used solely for delicate clothes.
- When washing dark coloured clothes and quilts, it is recommended to use liquid detergent.
- Wash woollens with special detergent made specifically for woollens.

⚠	**CAUTION:** Use only detergents manufactured specifically for washing machines.
	CAUTION: Do not use soap powder.

Adjusting detergent amount

The amount of washing detergent to be used depends on the amount of laundry, the degree of soiling and water hardness.

- Do not use amounts exceeding the dosage quantities recommended on the detergent package to avoid problems of excessive foam, poor rinsing, make financial savings and finally, environmental protection.
- Use lesser detergent for small amounts or lightly soiled clothes.

Using softeners

Pour the softener into the softener compartment of the detergent drawer.

- Do not exceed the (>max<) level sign on the softener compartment.
- If the softener has lost its fluidity, dilute it with water before putting it in the detergent compartment.

Using liquid detergents

If the product contains a liquid detergent cup:

- Put the liquid detergent container into the compartment no "2".
- If the liquid detergent lost its fluidity, dilute it with water before putting it into the detergent container.

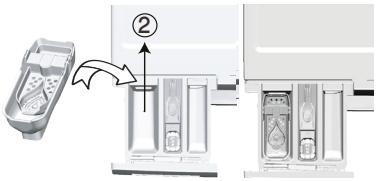

If the product does not contain a liquid detergent cup:

- Do not use liquid detergent for the prewash in a programme with prewash.
- Liquid detergent stains your clothes when used with "End Time" function for delayed start. If you are going to use the End Time function, do not use liquid detergent.

Using gel and tablet detergent

- If the gel detergent thickness is fluid and your product does not contain a special liquid detergent cup, put the gel detergent into the main wash detergent compartment during first water intake. If your product contains a liquid detergent cup, fill the detergent into this cup before starting the programme.
- If the gel detergent thickness is not fluid or in the shape of capsule liquid tablet, put it directly into the drum before washing.
- Put tablet detergents into the main wash compartment (compartment nr. "2") or directly into the drum before washing.

Using starch

- Use the softener compartment to put the starch or the liquid soda or the powder soda or the fabric dye.
  Do not use softener and starch together in a washing cycle.
- Wipe the inside of the product with a damp and clean cloth after using starch.

Using limescale remover

- When required, use limescale removers manufactured specifically for washing machines only.

Using bleaches

Add the bleach at the beginning of the washing cycle by selecting a prewash programme. Do not put detergent in the prewash compartment. As an alternative application, select a programme with extra rinse and add the bleaching agent while the product is taking water from the detergent compartment during first rinsing step.

- Do not use bleaching agent and detergent by mixing them.
- Use just a little amount (1/2 tea cup - approx. 50 ml) of bleaching agent and rinse the clothes very well as it causes skin irritation.
- Do not pour the bleach onto the laundry.
- Do not use it with the coloured items.
- When using oxygen-based whitener, select a programme which washes the laundry at a low temperature.
- Oxygen-based whiteners can be used together with the detergent. However, if its thickness is not the same as the detergent, put the detergent first into the compartment nr. "2" in the detergent drawer and wait until the detergent flows while the product is taking in water. While the machine continues taking in water, add whitener in the same compartment.

4.5.7 Tips for efficient washing

		Clothes			
		Light Colours and Whites	**Colours**	**Black/Dark Colours**	**Delicates/ Woollens/ Silks**
		(Recommended temperature range based on soiling level: 40-90 °C)	(Recommended temperature range based on soiling level: cold -40 °C)	(Recommended temperature range based on soiling level: cold -40 °C)	(Recommended temperature range based on soiling level: cold -30 °C)
Soiling Level	**Heavily Soiled** (difficult stains such as grass, coffee, fruits and blood.)	It may be necessary to pre-treat the stains or perform prewash. Powder and liquid detergents recommended for whites can be used at dosages recommended for heavily soiled clothes. It is recommended to use powder detergents to clean clay and soil stains and the stains that are sensitive to bleaches.	Powder and liquid detergents recommended for colours can be used at dosages recommended for heavily soiled clothes. It is recommended to use powder detergents to clean clay and soil stains and the stains that are sensitive to bleaches. Detergents which do not contain bleach should be used.	Liquid detergents suitable for colours and dark colours can be used at dosages recommended for heavily soiled clothes.	Prefer liquid detergents produced for delicate clothes. woollen and silk clothes must be washed with special woollen detergents.
	Normally Soiled (For example, stains caused by body on collars and cuffs)	Powder and liquid detergents recommended for whites can be used at dosages recommended for normally soiled clothes.	Powder and liquid detergents recommended for colours can be used at dosages recommended for normally soiled clothes. Detergents which do not contain bleach should be used.	Liquid detergents suitable for colours and dark colours can be used at dosages recommended for normally soiled clothes.	Prefer liquid detergents produced for delicate clothes. woollen and silk clothes must be washed with special woollen detergents.
	Lightly Soiled (No visible stains exist.)	Powder and liquid detergents recommended for whites can be used at dosages recommended for lightly soiled clothes.	Powder and liquid detergents recommended for colours can be used at dosages recommended for lightly soiled clothes. Detergents which do not contain bleach should be used.	Liquid detergents suitable for colours and dark colours can be used at dosages recommended for lightly soiled clothes.	Prefer liquid detergents produced for delicate clothes. woollen and silk clothes must be washed with special woollen detergents.

4.6 Operating the product

4.6.1 Control panel

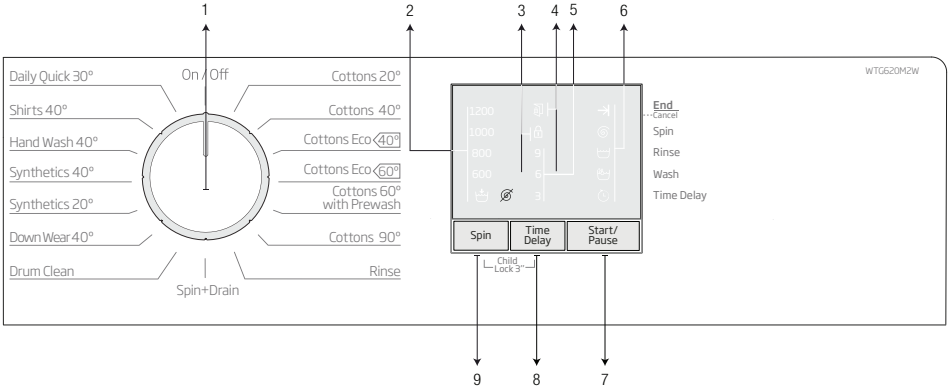

1 - Programme Selection knob (Uppermost position On / Off)
2 - Spin Speed Indicator LEDs
3 - Child Lock Enabled LED
4 - Door Lock Enabled LED
5 - Delayed Start Indicator LEDs
6 - Programme Follow-up LEDs
7 - Start / Pause Button
8 - Delayed Start Setting Button
9 - Spin Speed Adjustment button

4.6.2 Preparing the machine

1.Make sure that the hoses are connected tightly.
2.Plug in your machine.
3.Turn the tap on completely.
4.Place the laundry in the machine.
5.Add detergent and fabric softener.

4.6.3 Programme selection and tips for efficient washing

1.Select the programme suitable for the type, quantity and soiling degree of the laundry in accordance with the "Programme and consumption table" and the temperature table below.
2.Select the desired programme with the Programme Selection knob.

Indicative values for Synthetics programmes						
	Load (kg)	Water Consumption (l)	Energy Consumption (kWh)	Programme Duration (min) *	Remaining Moisture Content (%) ** ≤ 1000 rpm	Remaining Moisture Content (%) ** > 1000 rpm
Synthetics 40	2,5	66	0.75	105/140	45	40
Synthetics 20	2,5	66	0.25	105/140	45	40
* You can see the washing time of the programme you have selected on the display of the machine. It is normal that small differences may occur between the time shown on the display and the real washing time.						
** Remaining moisture content values may differ according to the selected spin speed.						

4.6.4 Programme and consumption table

EN						
Programme		Max. Load (kg)	Programme Duration (~min)	Water Consumption (l)	Energy Consumption (kWh)	Max. Speed***
Cottons	90	6	180	83	1.95	1200
	40	6	180	81	0.95	1200
	20	6	180	81	0.50	1200
Cottons 60° with Prewash	60	6	200	92	1.80	1200
Cottons Eco	60**	6	250	47.5	0.78	1200
	40**	3	195	33.7	0.59	1200
Synthetics	40	2.5	120	66	0.75	1200
	20	2.5	120	66	0.25	1200
Daily Quick	30	6	28	60	0.15	1200
Hand Wash	40	1.5	65	45	0.45	1200
Down Wear	40	1.5	105	85	0.80	1000
Shirts	40	2.5	80	42	0.60	800
Drum Clean	90	-	160	67	2.10	600

** : Energy Label programme (EN 60456 Ed.3)
***: If maximum spin speed of the machine is lower then this value, you can only select up to the maximum spin speed.
- : See the programme description for maximum load.

	** "Cotton Economic 40°C and Cotton Economic 60°C are standard programmes." These programmes are known as '40°C cotton standard programme' and '60°C cotton standard programme' and indicated with the 40° 60° symbols on the panel.
	Water and power consumption may vary subject to the changes in water pressure, water hardness and temperature, ambient temperature, type and amount of laundry, spin speed, and changes in electric voltage.
	Depending on the amount of laundry you have loaded into your machine, there may be a difference of 1-1.5 hours between the duration shown in the Programme and consumption table and the actual washing duration. Duration will be automatically updated soon after the washing starts.

4.6.5 Main programmes

Depending on the type of fabric, use the following main programmes.

• Cottons

Use this programme for your cotton laundry (sheets, bedlinen, towels, bathrobes, underwear etc.). Your laundry will be washed with vigorous washing action for a longer washing cycle.

• Synthetics

Use to wash your synthetic clothes (shirts, blouses, synthetic/cotton blends, etc.). Your laundry will be washed with a gentle action for a shorter washing cycle when compared to the Cottons programme. For curtains and tulle, it is recommended to use Synthetics 20˚C or 40˚C programme.

• Hand Wash

Use to wash your woolen/delicate laundry. Your laundry will be washed with a very gentle washing action in order not to damage the clothes.

4.6.6 Additional programmes

For special cases, additional programmes are available in the machine.

Additional programmes may differ according to the model of the machine.

• Cottons Eco

Use this programme to wash your laundry washable in cottons programme for a longer time, still with a very good performance for saving purposes.

Cotton Eco programme consumes less energy compared to other cotton programmes.

• Cottons 60° with Prewash

Use this programme only for heavily soiled cotton clothes. Add detergent into the prewash compartment.

• Daily Quick

Use this programme to wash your lightly soiled cotton clothes in a short time.

• Shirts

This programme is used to wash the shirts made from cotton, synthetic and synthetic blended fabrics altogether. It reduces wrinkles. Pre-treatment algorithm is executed.

• Apply the pre-treatment chemical on your garments directly or add it together with detergent when the machine starts to take water from the main washing compartment. Thus the machine will wash them in a short period of time and expected lifespan of your shirts will extend.

• Down Wear

Use this programme to wash your coats, vest, jackets etc. containing feathers with a "machine-washable" label on them. Thanks to special spinning profiles, it is ensured that the water reaches the air gaps amongst the feathers.

• Drum Clean

Use regularly (once in every 1-2 months) to clean the drum and provide the required hygiene. Operate the programme while the machine is completely empty. To obtain better results, put powder lime-scale remover for washing machines into the detergent compartment no. "2". When the programme is over, leave the loading door ajar so that the inside of the machine gets dry.

This is not a washing programme. It is a maintenance programme.
Do not run the programme when there is something in the machine. If you try to do so, the machine detects that there is load inside and aborts the programme.

4.6.7 Special programmes

For specific applications, select any of the following programmes.

• Rinse

Use when you want to rinse or starch separately.

• Spin+Drain

You can use this function to remove the water on the garment of drain the water in the machine.

Before selecting this programme, select the desired spin speed and press Start / Pause button. First, the machine will drain the water inside of it. Then, it will spin the laundry with the set spin speed and drain the water coming out of them.

If you wish to drain only the water without spinning your laundry, select the Pump+Spin programme and then select the No Spin function with the help of Spin Speed Adjustment button. Press Start / Pause button.

Use a lower spin speed for delicate laundries.

4.6.8 Speed selection

Whenever a new programme is selected, the recommended spin speed of the selected programme is displayed on the spin speed indicator.

To decrease the spin speed, press the Spin Speed Adjustment button. Spin speed decreases gradually. Then, depending on the model of the product, "Rinse Hold" and "No Spin" options appear on the display. When "No Spin" is selected, the rinse level indicator lights will not turn on.

Rinse hold

If you are not going to unload your clothes immediately after the programme completes, you can use rinse hold function to keep your laundry in the final rinsing water in order to prevent them from getting wrinkled when there is no water in the machine. Press Start / Pause button after this process if you want to drain the water without spinning your laundry. Programme will resume and complete after draining the water.

If you want to spin the laundry held in water, adjust the Spin Speed and press Start / Pause button.

The programme will resume. Water is drained, laundry is spun and the programme is completed.

If the programme has not reached the spinning step, you can change the speed without switching the machine to Pause mode.

4.6.9 Delayed Start

With the Delayed Start function the startup of the programme may be delayed up to 3, 6 or 9 hours.

Do not use liquid detergents when you set Delayed Start! There is the risk of staining of the clothes.

1. Open the loading door, place the laundry and put detergent, etc.
2. Select a washing programme and spin speed.
3. Set the desired time by pressing the Delayed Start button. When the button is pressed once, 3 hours delayed start is selected. When the same button is pressed again, 6 hours delay is selected, and when it is pressed for the third time, 9 hours delayed start is selected. If you press the Delayed Start button once again, Delayed Start function will be canceled.
4. Press Start / Pause button. Previous delayed start time light turns off and next delayed start time light turns on after every 3 hours.
5. At the end of the countdown, all delayed start lights will turn off and the selected programme will start.

You can switch the machine to pause mode and add laundry during the delayed start period.

Changing the delayed start period

If you want to change the time during countdown, you will need to cancel the programme and set the delay time again.

Canceling the Delayed Start function

If you want to cancel the delayed start countdown and start the programme immediately:

1. Turn the Programme Selection knob to any programme. Thus, Delayed Start function will be canceled. The End/Cancel light flashes continuously.
2. Then, select the programme you want to run again.
3. Press Start / Pause button to start the programme.

4.6.10 Starting the programme

1. Press Start / Pause button to start the programme.
2. Programme follow-up light showing the startup of the programme will turn on.

4.6.11 Child Lock

Use Child Lock function to prevent children from tampering with the machine. Thus you can avoid any changes in a running programme.

	If the Programme Selection knob is rotated when the child lock is active, "Child Lock Enabled LED" will flash 3 times. The Child Lock does not allow any change in the programmes or the selected speed.
	Even if another programme is selected with the Programme Selection knob while the Child Lock is active, previously selected programme will continue running.
	When the Child Lock is active and the machine is running, you can switch the machine to Pause mode without deactivating the Child Lock by turning the Programme Selection knob to On / Off position. When you turn the Programme Selection knob afterwards, the programme will resume.

To activate the Child Lock:

Press and hold Speed and Delayed Start buttons for 3 seconds. While you are holding for 3 seconds, the "Child Lock Enabled LED" will flash. You can release the buttons when the LEDs become permanently on.

To deactivate the Child Lock:

Press and hold Speed and Delayed Start buttons for 3 seconds while any programme is running. While you are holding for 3 seconds, the "Child Lock Enabled LED" will flash. You can release the buttons when the LED turns off completely.

	In addition to the method above, to deactivate the Child Lock, switch the Programme Selection knob to On / Off position when no programme is running, and select another programme.
	Child Lock is not deactivated after power failures or when the machine is unplugged.

4.6.12 Progress of programme

Progress of a running programme can be followed from the Programme Follow-up indicator. At the beginning of every programme step, the relevant indicator light will turn on and light of the completed step will turn off.

You can change the speed settings without stopping the programme flow while the programme is running. To do this, the change you are going to make must be in a step after the running programme step. If the change is not compatible, relevant lights will flash for 3 times.

	If the machine does not proceed to the spinning step, the Rinse Hold function might be active or the automatic unbalanced load detection system might be activated due to the unbalanced distribution of the laundry in the machine.

4.6.13 Loading door lock

There is a locking system on the loading door of the machine that prevents opening of the loading door in cases when the water level is unsuitable.
Loading door light will start flashing when the machine is switched to Pause mode. The machine checks the level of the water inside. If the level is suitable, the Loading Door light turns off and the loading door can be opened within 1-2 minutes.
If the level is unsuitable, the Loading Door light remains on and the loading door cannot be opened. If you are obliged to open the Loading Door while the Loading Door light is on, you must cancel the current programme. See. "Cancelling the programme"

4.6.14 Changing the selections after programme has started

Switching the machine to pause mode

Press the Start / Pause button to switch the machine to pause mode while a programme is running. The light of the step which the machine is in starts flashing in the Programme Follow-up indicator to show that the machine has been switched to the pause mode. Additionally, when the loading door is openable, the Loading Door light turns off completely.

Changing the speed settings

You can change the speed settings of the programme that is currently running. See "Speed selection".

If no change is allowed, the relevant light will flash 3 times.

Adding or taking out laundry

You can load/unload laundry when a programme is running if the water level is appropriate to open the door. To do this:

1. Press Start / Pause button to switch the machine to pause mode. The programme follow-up light of the relevant step during which the machine was switched into the pause mode will flash.
2. Wait until the Loading Door can be opened.
3. Open the Loading Door and add or take out the laundry.
4. Close the Loading Door.
5. Make changes in speed settings, if necessary.
6. Press Start / Pause button to start the machine.

4.6.15 Cancelling the programme

To cancel the programme, turn the Programme Selection knob to select another programme. Previous programme will be cancelled. End / Cancel light will flash continuously to notify that the programme has been canceled.
Your machine will end the programme when you turn the Programme Selection knob; however, it does not drain the water inside. When you select and start a new programme, the newly selected programme will start depending on the step the previous programme was canceled in. For example, it may take in additional water or continue to wash with the water inside.

Some programmes may start by discharging the water inside the machine. Depending on the step where the programme was canceled in, you may have to put detergent and softener again for the programme you have selected anew.

4.6.16 End of programme

When the programme ends, "End" LED becomes on at the Programme Follow-up indicator.
1. Wait until the "Door Lock Enabled LED" goes off completely.
2. To switch off the machine, turn the Programme Selection Knob to On/Off position.
3. Take out your laundry and close the loading door. Your machine is ready for the next washing cycle.

4.6.17 Your machine features "Pause Mode".

After you switch on your machine with the programme selection button (by switching the button to a different position than the On/Off position), if no programme is started or no other procedure is performed in the selection step or no action is taken within approx. 2 minutes after the selected programme ends, your machine will switch to energy saving mode automatically. The brightness of the indicator lights will decrease. Also, if your product has a display that shows programme time, this display will be completely turned off. If you turn the Programme Selection knob or touch any button, lights and display will switch back to previous condition. The selections which you make when exiting from the energy efficiency may change. Please check the correctness of your selections before starting the programme. If necessary, please make your settings again. This is not an error.

4.7 Maintenance and cleaning

Service life of product extends and frequently experienced problems will be reduced if it is cleaned at regular intervals.

4.7.1 Cleaning the detergent drawer

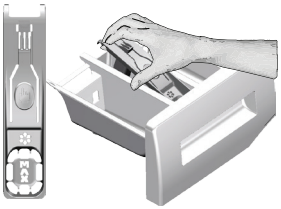

Clean the detergent drawer at regular intervals (every 4-5 washing cycles) as shown below in order to prevent accumulation of powder detergent in time.
If more than normal amount of water and softener mixture starts to gather in the softener compartment, the siphon must be cleaned.

1 Press the indicated point on the siphon in the softener compartment and pull the drawer towards you until the compartment is removed from the machine.
2 Lift the rear part of the siphon to remove it as illustrated.
3 Wash the detergent drawer and the siphon with plenty of lukewarm water in a washbasin. In order to prevent the residues to contact your skin, clean it with an appropriate brush by wearing a pair of gloves.
3 Insert the drawer back into its place after cleaning and make sure that it is seated well.

4.7.2 Cleaning the loading door and the drum

For products with drum cleaning programme, please see Operating the product - Programmes.

	Repeat Drum Cleaning process in every 2 months.
	Use an anti-limescale suitable for washing machines.

After every wash make sure that no foreign substance is left in the drum.
If the holes on the door bellow shown in the figure are blocked, open the holes using a toothpick.
Foreign metal substances will cause rust stains in the drum. Clean the stains on the drum surface by using cleaning agents for stainless steel.
Never use steel wool or wire wool. These will damage the painted, chromated and plastic surfaces.

4.7.3 Cleaning the body and control panel

Wipe the body of the product with soapy water or non-corrosive mild gel detergents as necessary, and dry with a soft cloth.
Use only a soft and damp cloth to clean the control panel.

4.7.4 Cleaning the water intake filters

There is a filter at the end of each water intake valve at the rear of the product and also at the end of each water intake hose where they are connected to the tap. These filters prevent foreign substances and dirt in the water to enter the product. Filters should be cleaned as they do get dirty.

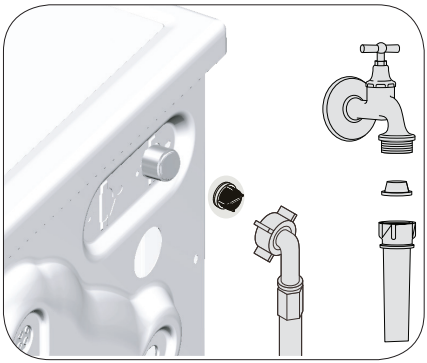

1. Close the taps.
2. Remove the nuts of the water intake hoses to access the filters on the water intake valves. Clean them with an appropriate brush. If the filters are too dirty, remove them from their places with a pliers and clean in this way.
3. Take out the filters on the flat ends of the water intake hoses together with the gaskets and clean thoroughly under running water.
4. Replace the seals and filters carefully and tighten their nuts by hand.

4.7.5 Draining remaining water and cleaning the pump filter

The filter system in your product prevents solid items such as buttons, coins and fabric fibres clogging the pump impeller during discharge of washing water. Thus, the water will be discharged without any problem and the service life of the pump will extend.
If the product fails to drain water inside it, the pump filter is clogged. Filter must be cleaned whenever it is clogged or every 3 months. Water must be drained off first to clean the pump filter.
In addition, prior to transporting the product (e.g., when moving to another house) water should be drained completely.

⚠	**CAUTION:** Foreign substances left in the pump filter may damage your product or may cause noise problem.
	CAUTION: In regions where freezing is possible, the supply tap must be closed, system hose must be removed and the water inside the product must be drained when the product is not in use.
	CAUTION: After each use, turn off the water tap to which the mains hose is connected.

In order to clean the dirty filter and discharge the water:

1 Unplug the product to cut off the supply power.

CAUTION: Temperature of the water inside the product may rise up to 90 °C. To avoid the burning risk, clean the filter after the water inside the product is cooled down.

2. Open the filter cover.

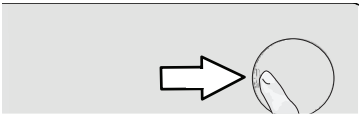

3 Follow the below procedures in order to drain water.

If the product has an emergency water draining hose, in order to drain the water:

a Pull the emergency draining hose out from its seat

b Place a large container at the end of the hose. Drain the water into the container by pulling out the plug at the end of the hose. When the container is full, block the inlet of the hose by replacing the plug. After the container is emptied, repeat the above procedure to drain the water in the product completely.

c When draining of water is finished, close the end by the plug again and fix the hose in its place.

d Turn and remove the pump filter.

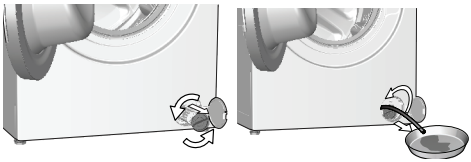

4.Clean any residues inside the filter as well as fibres, if any, around the pump impeller region.

5. Replace the filter.

6. If the filter cap is composed of two pieces, close the filter cap by pressing on the tab. If it is one piece, seat the tabs in the lower part into their places first, and then press the upper part to close.

5 Troubleshooting

Problem	Reason	Solution
Program does not start after closing the door.	Start / Pause / Cancel button was not pressed.	• *Press the Start / Pause / Cancel button.
	It may be difficult to close the loading door in case of excessive loading.	• Reduce the amount of laundry and make sure that the loading door is closed properly.
Programme cannot be started or selected.	Washing machine has switched to self protection mode due to a supply problem (line voltage, water pressure, etc.).	• To cancel the programme, turn the Programme Selection knob to select another programme. Previous programme will be canceled. (See "Cancelling the programme")
Water in the machine.	Some water might have remained in the product due to the quality control processes in the production.	• This is not a failure; water is not harmful to the machine.
The machine enters standby mode after the programme starts or it does not take in water.	Tap is turned off.	• Turn on the taps.
	Water inlet hose is bent.	• Flatten the hose.
	Water inlet filter is clogged.	• Clean the filter.
	Loading door may be open.	• Close the door.
	The water connection may be wrong or water may be cut off (When the water is cut off, washing or rinsing LEDs flash).	• Check the water connection. If the water is cut off, press the Start/Pause key after the water has been supplied again to resume the operation from standby mode.
Machine does not drain water.	Water drain hose might be clogged or twisted.	• Clean or flatten the hose.
	Pump filter is clogged.	• Clean the pump filter.
Machine vibrates or makes noise.	Machine might be standing unbalanced.	• Adjust the feet to level the machine.
	A hard substance might have entered into the pump filter.	• Clean the pump filter.
	Transportation safety bolts are not removed.	• Remove the transportation safety bolts.
	Laundry quantity in the machine might be too little.	• Add more laundry to the machine.
	Machine might be overloaded with laundry.	• Take out some of the laundry from the machine or distribute the load by hand to balance it homogenously in the machine.
	Machine might be leaning on a rigid item.	• Make sure that the machine is not leaning on anything.
There is water leaking from the bottom of the washing machine.	Water drain hose might be clogged or twisted.	• Clean or flatten the hose.
	Pump filter is clogged.	• Clean the pump filter.
Machine stopped shortly after the programme started.	Machine might have stopped temporarily due to low voltage.	• It will resume running when the voltage restores to the normal level.
Machine directly discharges the water it takes in.	Draining hose might not be at adequate height.	• Connect the water draining hose as described in the operation manual.

Problem	Reason	Solution
No water can be seen in the machine during washing.	The water level is not visible from outside of the washing machine.	• This is not a failure.
Loading door cannot be opened.	Door lock is activated because of the water level in the machine.	• Drain the water by running the Pump or Spin programme.
	Machine is heating up the water or it is at the spinning cycle.	• Wait until the programme completes.
	Child lock is engaged. Door lock will be deactivated a couple of minutes after the programme has come to an end.	• Wait for a couple of minutes for deactivation of the door lock.
	Loading door may be stuck because of the pressure it is subjected to.	• Grab the handle and push and pull the loading door to release and open it.
Washing takes longer time than specified in the manual.(*)	Water pressure is low.	• Machine waits until taking in adequate amount of water to prevent poor washing quality due to the decreased amount of water. Therefore, the washing time extends.
	Voltage might be low.	• Washing time is prolonged to avoid poor washing results when the supply voltage is low.
	Input temperature of water might be low.	• Required time to heat up the water extends in cold seasons. Also, washing time can be lengthened to avoid poor washing results.
	Number of rinses and/or amount of rinse water might have increased.	• Machine increases the amount of rinse water when good rinsing is needed and adds an extra rinsing step if necessary.
	Excessive foam might have occurred and automatic foam absorption system might have been activated due to too much detergent usage.	• Use recommended amount of detergent.
Programme time does not countdown. (On models with display) (*)	Timer may stop during water intake.	• Timer indicator will not countdown until the machine takes in adequate amount of water. The machine will wait until there is sufficient amount of water to avoid poor washing results due to lack of water. Timer indicator will resume countdown after this.
	Timer may stop during heating step.	• Timer indicator will not countdown until the machine reaches the selected temperature.
	Timer may stop during spinning step.	• Automatic unbalanced load detection system might be activated due to the unbalanced distribution of the laundry in the drum.
Programme time does not countdown. (*)	There might be unbalanced load in the machine.	• Automatic unbalanced load detection system might be activated due to the unbalanced distribution of the laundry in the drum.

Problem	Reason	Solution
Machine does not switch to spinning step. (*)	There might be unbalanced load in the machine.	• Automatic unbalanced load detection system might be activated due to the unbalanced distribution of the laundry in the drum.
	The machine will not spin if water is not drained completely.	• Check the filter and the draining hose.
	Excessive foam might have occurred and automatic foam absorption system might have been activated due to too much detergent usage.	• Use recommended amount of detergent.
Washing performance is poor: Laundry turns gray. (**)	Insufficient amount of detergent has been used over a long period of time.	• Use the recommended amount of detergent appropriate for water hardness and the laundry.
	Washing was made at low temperatures for a long time.	• Select the proper temperature for the laundry to be washed.
	Insufficient amount of detergent is used with hard water.	• Using insufficient amount of detergent with hard water causes the soil to stick on the cloth and this turns the cloth into gray in time. It is difficult to eliminate graying once it happens. Use the recommended amount of detergent appropriate for water hardness and the laundry.
	Too much detergent is used.	• Use the recommended amount of detergent appropriate for water hardness and the laundry.
Washing performance is poor: Stains persist or the laundry is not whitened. (**)	Insufficient amount of detergent is used.	• Use the recommended amount of detergent appropriate for water hardness and the laundry.
	Excessive laundry was loaded in.	• Do not load the machine in excess. Load with amounts recommended in the "Programme and consumption table".
	Wrong programme and temperature were selected.	• Select the proper programme and temperature for the laundry to be washed.
	Wrong type of detergent is used.	• Use original detergent appropriate for the machine.
	Too much detergent is used.	• Put the detergent in the correct compartment. Do not mix the bleaching agent and the detergent with each other.
Washing performance is poor: Oily stains appeared on the laundry. (**)	Regular drum cleaning is not applied.	• Clean the drum regularly. For this, please see 4.7.2.
Washing performance is poor: Clothes smell unpleasantly. (**)	Odours and bacteria layers are formed on the drum as a result of continuous washing at lower temperatures and/or in short programmes.	• Leave the detergent drawer as well as the loading door of the machine ajar after each washing. Thus, a humid environment favorable for bacteria cannot occur in the machine.

Problem	Reason	Solution
Colour of the clothes faded. (**)	Excessive laundry was loaded in.	• Do not load the machine in excess.
	Detergent in use is damp.	• Keep detergents closed in an environment free of humidity and do not expose them to excessive temperatures.
	A higher temperature is selected.	• Select the proper programme and temperature according to the type and soiling degree of the laundry.
It does not rinse well.	The amount, brand and storage conditions of the detergent used are inappropriate.	• Use a detergent appropriate for the washing machine and your laundry. Keep detergents closed in an environment free of humidity and do not expose them to excessive temperatures.
	Detergent is put in the wrong compartment.	• If detergent is put in the prewash compartment although prewash cycle is not selected, machine can take this detergent during rinsing or softener step. Put the detergent in the correct compartment.
	Pump filter is clogged.	• Check the filter.
	Drain hose is folded.	• Check the drain hose.
Laundry became stiff after washing. (**)	Insufficient amount of detergent is used.	• Using insufficient amount of detergent for the water hardness can cause the laundry to become stiff in time. Use appropriate amount of detergent according to the water hardness.
	Detergent is put in the wrong compartment.	• If detergent is put in the prewash compartment although prewash cycle is not selected, machine can take this detergent during rinsing or softener step. Put the detergent in the correct compartment.
	Detergent might be mixed with the softener.	• Do not mix the softener with detergent. Wash and clean the dispenser with hot water.
Laundry does not smell like the softener. (**)	Detergent is put in the wrong compartment.	• If detergent is put in the prewash compartment although prewash cycle is not selected, machine can take this detergent during rinsing or softener step. Wash and clean the dispenser with hot water. Put the detergent in the correct compartment.
	Detergent might be mixed with the softener.	• Do not mix the softener with detergent. Wash and clean the dispenser with hot water.

Problem	Reason	Solution
Detergent residue in the detergent drawer. (**)	Detergent is put in wet drawer.	• Dry the detergent drawer before putting in detergent.
	Detergent has gotten damp.	• Keep detergents closed in an environment free of humidity and do not expose them to excessive temperatures.
	Water pressure is low.	• Check the water pressure.
	The detergent in the main wash compartment got wet while taking in the prewash water. Holes of the detergent compartment are blocked.	• Check the holes and clean if they are clogged.
	There is a problem with the detergent drawer valves.	• Call the Authorized Service Agent.
	Detergent might be mixed with the softener.	• Do not mix the softener with detergent. Wash and clean the dispenser with hot water.
	Regular drum cleaning is not applied.	• Clean the drum regularly. For this, please see 4.7.2.
Too much foam forms in the machine. (**)	Improper detergents for the washing machine are being used.	• Use detergents appropriate for the washing machine.
	Excessive amount of detergent is used.	• Use only sufficient amount of detergent.
	Detergent was stored under improper conditions.	• Store detergent in a closed and dry location. Do not store in excessively hot places.
	Some meshed laundry such as tulle may foam too much because of their texture.	• Use smaller amounts of detergent for this type of item.
	Detergent is put in the wrong compartment.	• Put the detergent in the correct compartment.
	Softener is being taken early.	• There may be problem in the valves or in the detergent dispenser. Call the Authorized Service Agent.
Foam is overflowing from the detergent drawer.	Too much detergent is used.	• Mix 1 tablespoonful softener and ½ l water and pour into the main wash compartment of the detergent drawer.
		• Put detergent into the machine suitable for the programmes and maximum loads indicated in the "Programme and consumption table". When you use additional chemicals (stain removers, bleachs and etc), reduce the amount of detergent.
Laundry remains wet at the end of the programme. (*)	Excessive foam might have occurred and automatic foam absorption system might have been activated due to too much detergent usage.	• Use recommended amount of detergent.

(*) Machine does not switch to spinning step when the laundry is not evenly distributed in the drum to prevent any damage to the machine and to its surrounding environment. Laundry should be rearranged and re-spun.

(**) Regular drum cleaning is not applied. Clean the drum regularly. See 4.7.2

CAUTION: If you cannot eliminate the problem although you follow the instructions in this section, consult your dealer or the Authorized Service Agent. Never try to repair a nonfunctional product yourself.

Service

Please keep your purchase receipt or other proof of purchase in a safe place; you will need to have it should the product require attention under guarantee.
You should also complete the details below; it will help us assist you when requesting service. (The model number is printed on the Instruction Booklet and the serial number is printed on the Rating Label affixed to the appliance)

Model No:
Serial No:
Retailer:
Date of purchase:

For service under guarantee simply telephone the appropriate number below

UK Mainland & Northern Ireland

Fridges & Freezers	0345 600 4903 or 0845 600 4903
Electric Cookers	0345 600 4902 or 0845 600 4902
Gas & Dual Fuel Cookers	0345 600 4905 or 0845 600 4905

Washing Machines & Tumble Dryers
0345 600 4906 or 0845 600 4906

Republic of Ireland

All Refrigeration,	01 862 3411
All Cookers	
Washing Machines & Dishwashers	

Before requesting service please check the trouble-shooting guide in the Operating Instructions as a charge may be levied where no fault is found even though your product may still be under guarantee.

Service once the manufacturers guarantee has expired.
If you have purchased an extended guarantee please refer to the instructions contained within the extended guarantee agreement document. Otherwise please call the appropriate number above where service can be obtained at a charge.
Should you experience any difficulty in obtaining service please contact the Beko Customer Help-Line.
Tel: 0845 600 4911
e-mail:service@beko.co.uk

Guarantee

Washing Machine

Your new Beko product is guaranteed against the cost of breakdown repairs for twelve months from the date of the original purchase.

What is covered?

- Repairs necessary as a result of faulty materials, defective components or manufacturing defect.
- The cost of functional replacement parts, but excluding consumable items.
- The labour costs of a Beko approved repairer to carry out the repair.

What is not covered?

- Transit, delivery or accidental damage or misuse and abuse.
- Cabinet or appearance parts, including knobs, flaps, handles or container lids.
- Accessories or consumable items including but not limited to, ice trays, scrapers, cutlery baskets, filters and light bulbs.
- Repairs required as a result of unauthorised repair or inexpert installation that fails to meet the requirements contained in the user instruction book.
- Repairs to products used on commercial or non-residential household premises.
- Loss of frozen food in freezers or fridge/freezers. (Food loss insurance is often included within your household contents insurance policy, or may be available separately from your retailer).

Important notes.

- Your Beko product is designed and built for domestic household use only.
- The guarantee will be void if the product is installed or used in commercial or non-residential domestic household premises.
- The product must be correctly installed, located and operated in accordance with the instructions contained in the User Instructions Booklet provided.
- Professional installation by a qualified Electrical Domestic Appliance Installer is recommended for all Washing Machines, Dishwashers and Electric Cookers
- Gas Cookers must only be installed by a Gas Safe (or BORD GAIS) registered Gas Installer.
- The guarantee is given only within the boundaries of the United Kingdom and the Republic of Ireland.
- The guarantee is applicable only to new products and is not transferable if the product is resold.
- Beko disclaims any liability for incidental or consequential damages.
- The guarantee does not in anyway diminish your statutory or legal rights.

Should you experience any difficulty in obtaining service please contact the Beko Customer Help-Line.

Tel: 0845 600 4911

e-mail:service@beko.co.uk

www.beko.com