HealthPostures Products

Stance move

5000 Stance Move

Optional 5010 Stance Move Seat Extension

Stance move

5050 Stance Move EXT

TASKMATE™ Go

6300 TaskMate Go

TASKMATE™ Journey

6200 TaskMate Journey

TASKMATE™ Executive

6100 TaskMate Executive

TaskMate Journey Optional Accessories

6142 Copy/Phone holder

6912 Dual Monitor with Articulating Arm

6915 Notebook holder and Monitor Arm

Surface TASKMATE™

6252 Surface TaskMate

Surface TASKMATE™

6254 Surface TaskMate

HealthPostures
Motion. Energy. Life.

14310 Ewing Ave. S., Suite 100, Burnsville, MN 55306 (p)800.277.1841 (f)952.873.3741

www.healthpostures.com

TASKMATE™ Go

Owners Manual

HealthPostures
Motion. Energy. Life.

Congratulations

This manual is an integral part of your TaskMate Go and should be read thoroughly by anyone that will be operating the unit. This will ensure the TaskMate Go is properly used in a manner that is most beneficial.

It is important and necessary that you inspect your TaskMate Go periodically to assure that it is in safe operating condition. Minor adjustments can be made by the operator. Replacement of worn parts, major adjustments or any other important corrections should be handled by an authorized dealer or service center. To ensure safety and performance only HealthPostures approved replacement parts should be used.

Date Purchased _____

Serial Number _____

Congratulations on your purchase of the TaskMate Go. HealthPostures has designed the TaskMate Go with you in mind. What you are about to experience will change the way you work and feel at your computer. Since the TaskMate Go may be a new concept to you, using the TaskMate Go may take some getting used to. Be patient, have fun, experiment.

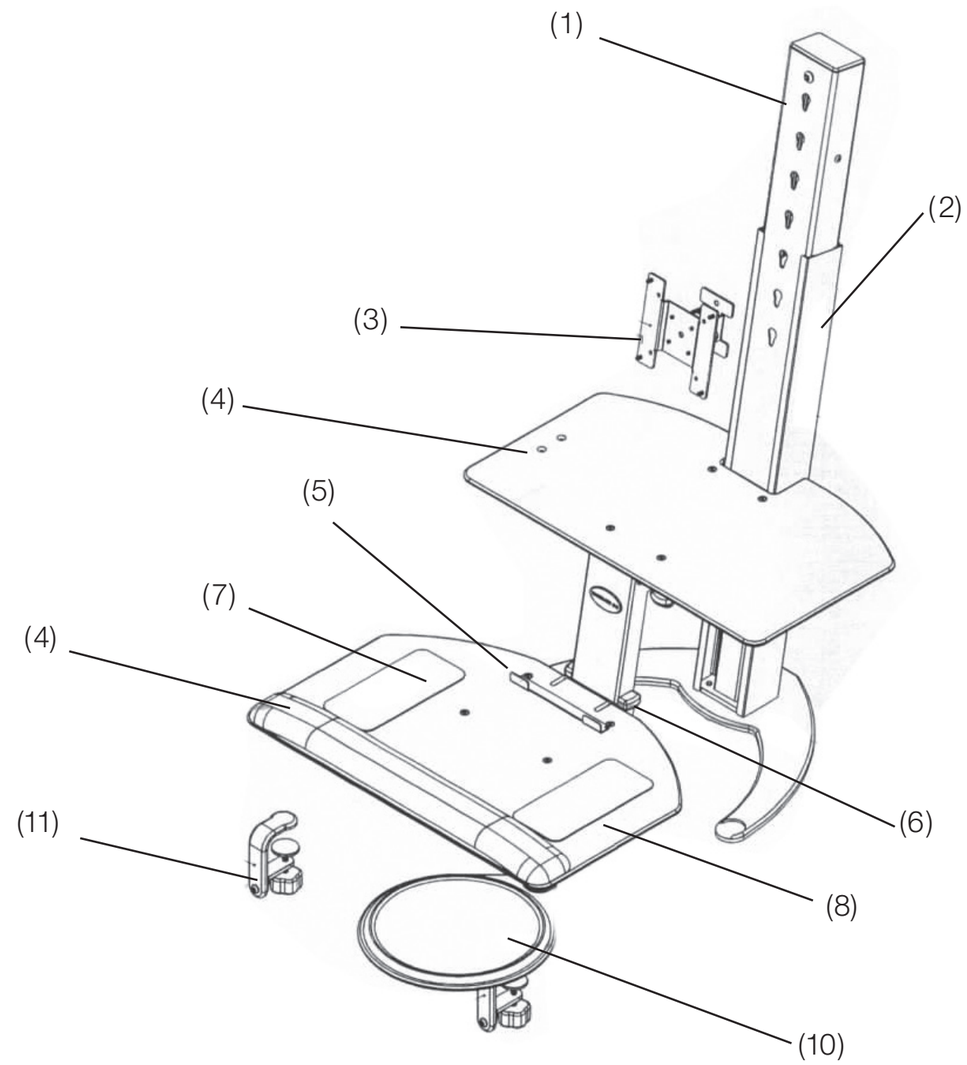

Item No.	Part No.	Description
1	100-1-002	Tube Weldment
2	100-2-014	Slide Cover
3	100-0-011	Monitor Mount Assembly
4	100-3-010	Lift Table
5	100-2-020	Copy Holder
6	100-3-004	Keyboard Angle Knob
7	999-9-012	Keyboard Non Slip Pad
8	100-3-011	Keyboard Tray
9	999-9-008	Wrist Rest
10	999-9-009	Swing Away Mouse Pad
11	100-0-012	Base Clamp Assembly

TaskMate Go warranty.

The warranty is extended to the original purchaser/customer and commences on the purchase date from the seller/dealer. HealthPostures (HP) warrants its TaskMate Go to be free from defects in materials or workmanship for a period of 5 years.

What is not covered by this warranty:

- Normal wear and tear
- Alteration or modification of the product
- Abuse, misuse. or accident
- Damage resulting from shipment or storage

Written notice of the defect must be given to HP within the applicable warranty period. Any product proven to (HP) satisfaction to be defective and within warranty period shall be repaired or replaced at HealthPostures' option. Only HealthPostures approved components validate this warranty. This warranty does not include any labor charges incurred in replacement parts installation. Freight charges to factory are at the expense of consumer to seller. Return freight charges will be prepaid by (HP). No credit will be given for any repairs to damaged or defective items without the prior approval of HealthPostures. HealthPostures reserves the right to require that any such item be returned to the factory tor inspection.

THIS WARRANTY IS THE ONLY WARRANTY MADE BY HEALTHPOSTURES, AND ALL OTHER WARRANTIES, INCLUDING IMPLIED WARRANTIES OF MARKETABILITY AND FITNESS FOR A PARTICULAR PURPOSE ARE HEREBY DISCLAIMED, DAMAGE RESULTING FROM MISUSE, NEGLIGENCE, ACCIDENT OR ALTERATIONS ARE EXCLUDED AND WILL NOT BE PAID. HEALTHPOSTURES WILL NOT BE LIABLE FOR ANY CONSEQUENTIAL OR INCIDENTAL DAMAGES WHATSOEVER.

Safety Precautions & Maintenance

Please be sure to read the entire contents of this manual before operating your new TaskMate Go. This manual contains important information concerning safety, maintenance and proper use of the TaskMate Go.

1. Check your TaskMate Go periodically to make sure all bolts, fasteners and adjustable parts are tightened securely.
2. Clean the TaskMate Go with mild, non-abrasive cleaners and/or soap and water.

3. Keep bystanders, children and visitors away from the TaskMate Go while raising or lowering. Distractions can cause you to lose your focus on the surrounding area, and a hand, finger, or any other obstacle may be in harms way.

Unique Features

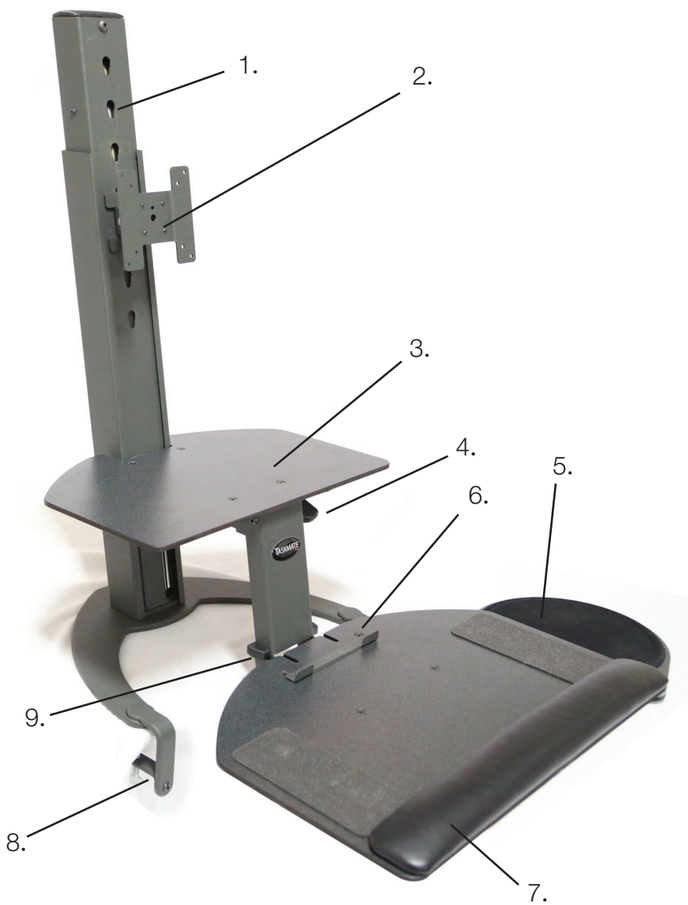

Unique Features

1. Independent monitor adjustments
2. Vesa standard monitor mount
3. Convenient work surface
4. Simple one lever height control
5. Adjustable mouse pad
6. Built-in copy holder
7. Comfortable wrist rest
8. Quickly and securely attaches to most any work surface
9. Keyboard tilt adjustment

Adjustment & Installation

Height Adjustments

1. Adjust TaskMate Go upward by squeezing lever until desired height is reached then release lever to lock securely into place.
   To adjust TaskMate Go downward, squeeze lever while pushing down on work surface tray until desired position is reached. [Do not push down on keyboard tray.]

Keyboard Adjustments

1. Adjust keyboard tilt by rotating the three point pivot.
2. Adjust mouse pad by rotating to desired position, rotate in before lowering unit below table height.

Single Monitor Arm Adjustment

1. Adjust monitor to the desired height by inserting bracket pegs in corresponding holes.
2. Monitor Adjustment – Tilt

Dual Monitor Arm Adjustment (if equipped)

1. Adjust monitor to the desired height by inserting bracket pegs in corresponding holes.
2. Monitor Adjustment
   – Tilt
   – Pan
   – Rotate

1. For your convenience the TaskMate Go ships fully assembled. Just place unit in desired location on the work surface.

2. Clamp TaskMate Go to your work surface using supplied clamps. Place clamping pad on top of thumb screws and tighten securely.

3. Attach monitor to monitor bracket using supplied screws.

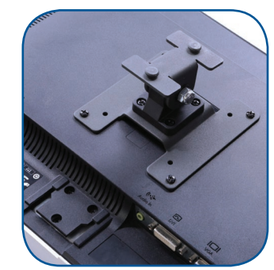
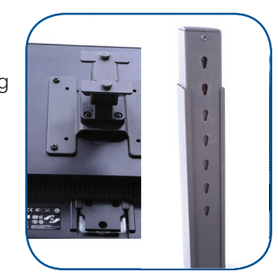
4. Attach the monitor bracket to TaskMate Go by inserting pegs into teardrop shaped holes and pushing downward to lock into place.