Instruction Manual
Rack Power Distribution Unit

ZP Series

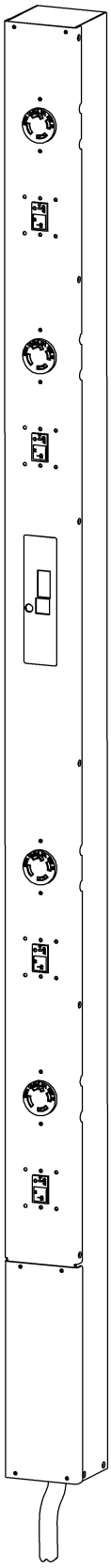

Geist Manufacturing 1821 Yolande Ave., Lincoln, NE 68521
800.432.3219 | 402.474.3400 | F: 402.474.4369 | www.geistglobal.com

Contents

Specifications **3**
Overview 3
Environmental 3
Electrical 3
Receptacle Ratings 3
Networking (For Current Monitoring (EM) Meter Units Only) 3
Data Formats (For Current Monitoring (EM) Meter Units Only) 4
EMC Verification 4
Installation **5**
Instructions 5
Guidelines 5
Mounting **6**
Optional Local Monitoring **13**
Power Meter 13
Current Meter 13
Three Circuit Current Meter 14
Optional Remote Monitoring **15**
Current Monitoring Meter Overview 15
Current Monitoring Meter Instructions 15
Satellite Current Monitoring Meter Overview 21
Service / Tech Support **24**
Service and Maintenance 24
More Technical Support 24
Table of Figures **25**
Revision History **26**

Specifications

Overview

The ZP Series products are Power Distribution Units (PDU) intended for connection to a 50-120 Amp AC Mains circuit. The PDUs are designed to be powered by either a single phase or a three phase AC input circuit. Three phase units are configured for a delta input connection. ZP Series PDUs can optionally be configured with a Geist Current Meter that provides local monitoring and display of each output circuit current. Alternatively, ZP Series PDUs can be configured with a Geist Current Monitoring (EM) Meter that provides both local and remote monitoring of input and output line current.

Environmental

Temperature

Operating:	10°C (50°F) min	45°C (113°F) max
Storage:	-25°C (-13°F) min	65°C (149°F) max

Humidity

Operating:	5% min	95% max	(non-condensing)
Storage:	5% min	95% max	(non-condensing)

Elevation

Operating:	0 m (0 ft) min	2000 m (6561 ft) max
Storage:	0 m (0 ft) min	15240 m (50000 ft) max

Electrical

See nameplate for unit ratings.

Receptacle Ratings

NEMA 5-15R or L5-15R	125 Volts, 15 Amp
NEMA 5-20R or L5-20R	125 Volts, 20 Amp
NEMA 6-20R or L6-20R	250 Volts, 20 Amp
NEMA L15-20R	250 Volts 3~, 20 Amp
NEMA L15-30R	250 Volts 3~, 30 Amp
IEC-320 C13	125/250 Volt, 15 Amp (per Receptacle Bank)
IEC-320 C19	125/250 Volt, 20 Amp

Networking (For Current Monitoring (EM) Meter Units Only)

Protocols

HTTP, ICMP, DHCP, TCP/IP, FTP

Ethernet Link Speed

10 Mbit; half-duplex

Data Formats (For Current Monitoring (EM) Meter Units Only)

HTML, SNMP, XML

EMC Verification

This Class A device complies with part 15 of the FCC Rules. Operation is subject to the following two conditions: (1) This device may not cause harmful interference, and (2) this device must accept any interference received, including interference that may cause undesired operation.

This Class A digital apparatus complies with Canadian ICES-003.

Cet appareil numérique de la classe A est conforme à la norme NMB-003 du Canada.

Warning: Changes or modifications to this unit not expressly approved by the party responsible for compliance could void the user's authority to operate this equipment.

FCC and Canadian ICES-003 requirements for units with Current Monitoring (EM) Meter: The ferrite core shipped with the unit must be placed around the Ethernet cable close to the PDU.

Installation

Instructions

1. Using appropriate hardware, mount PDU to rack (see *Mounting* section for additional instructions.
2. Connect PDU into de-energized appropriately rated branch circuit with plug or hardwired connection depending on PDU design[1].
3. Connect devices into PDU's output receptacles. It is recommended that the devices are turned off until all devices are connected to PDU
4. Turn on branch circuit to energize PDU.
5. Power on devices. Sequential power up is recommended to avoid high inrush current.

Guidelines

- If the PDU is installed in a cabinet the ambient temperature of the rack should be no greater than 45°C.
- Install the PDU such that the amount of airflow required for safe operation of equipment is not compromised.
- Mount the PDU so that a hazardous condition is not achieved due to uneven mechanical loading.
- Follow nameplate ratings when connecting equipment to the branch circuit. Take into consideration the effect that overloading of the circuits might have on over-current protection and supply wiring.
- The PDU relies on the building installation for protection from over-current conditions. A certified overcurrent protection device is required in the building installation. The overcurrent protection device should be sized according to the PDU's nameplate ratings and local/national electrical codes.
- Reliable earthing of rack-mount equipment should be maintained. Particular attention should be given to supply connections other than direct connections to the branch circuit. The PDU must be connected to an earthed socket-outlet.
- The PDU is intended for Restricted Access Locations only and only qualified service personnel should install and access the PDU.
- For pluggable equipment, install the PDU so that the input plug or appliance coupler may be disconnected for service.
- Sequential power-up of devices powered by the PDU is recommended to avoid high inrush current.
- **Caution:** Disconnect all power cords before servicing.
- The PDU is intended for use with TN, TT, or IT power supply systems

[1] Branch Circuit overcurrent protection should be sized based on the PDU's nameplate electrical rating. For cord connected North American units the branch circuit overcurrent protection should be rated 125% of the nameplate current rating. For cord connected Global units and all permanently connected units the branch circuit overcurrent protection should be rated for 100% of the nameplate current rating.

Mounting

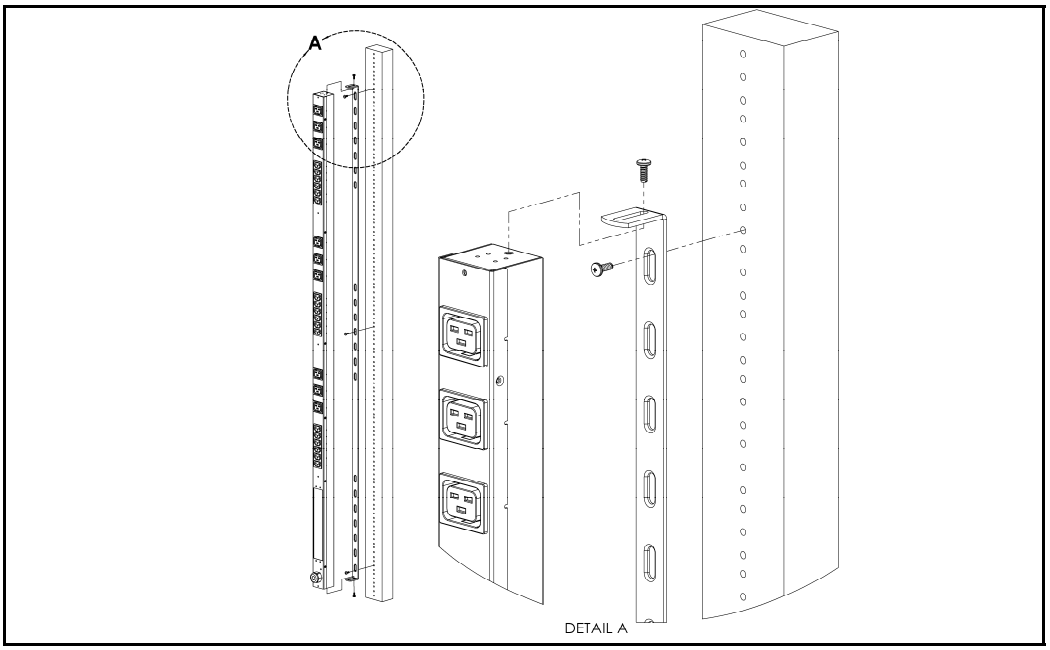

Full Length Bracket

Using the full length bracket, mount PDU to rack as shown

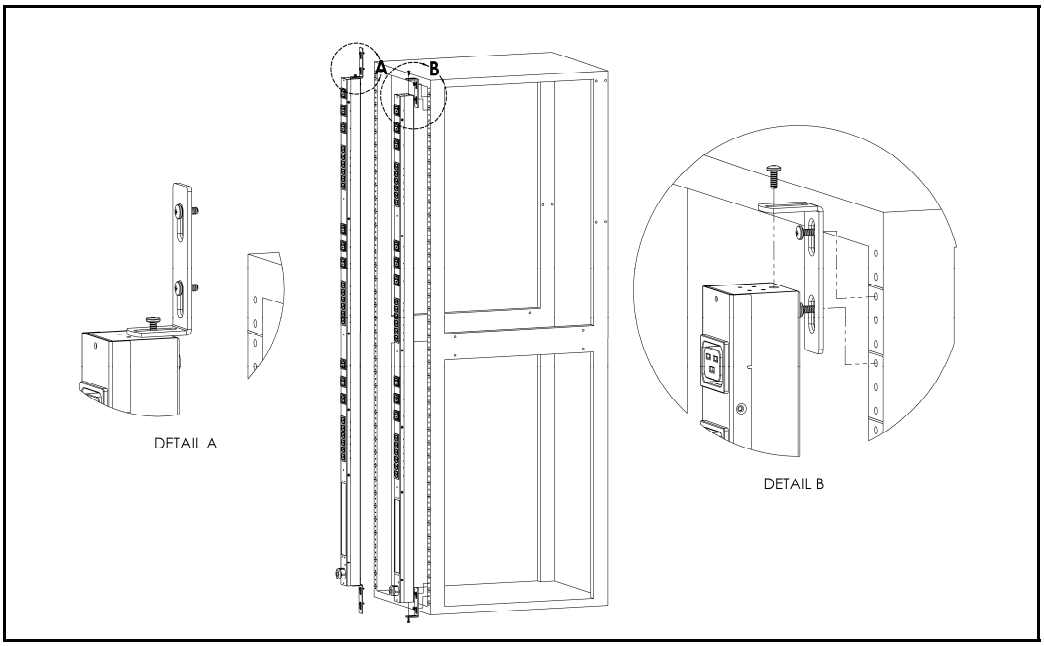

Mini "L" Brackets (SLB-4)

Using the mini “L” brackets, attach PDU to rack as shown

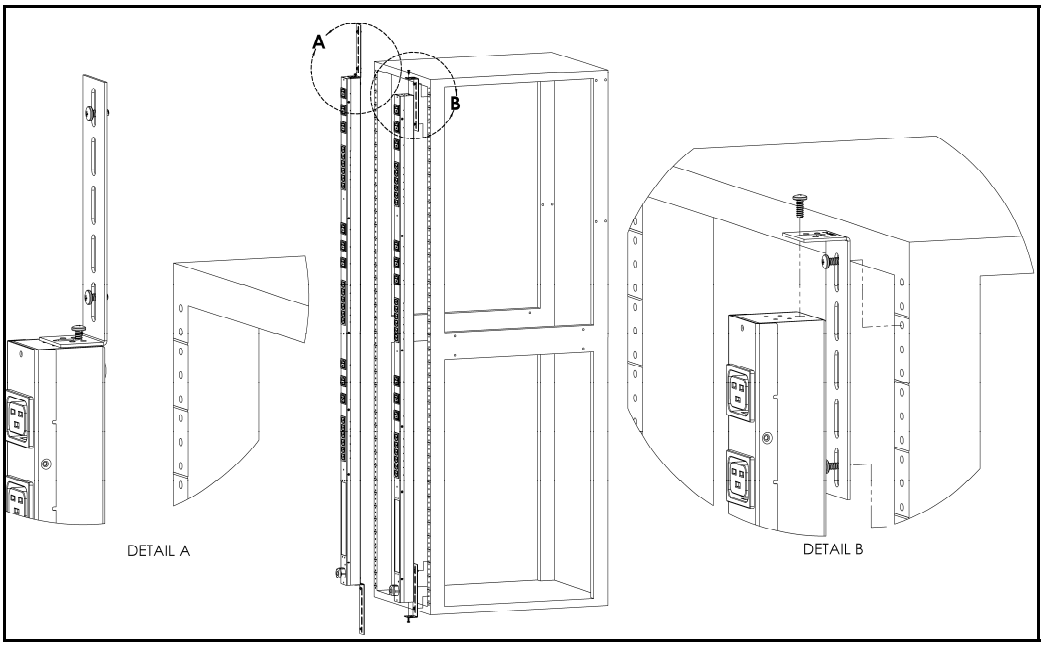

Vertical Extension Brackets (VCB-1)

Using the vertical extension brackets, attach PDU to rack as shown

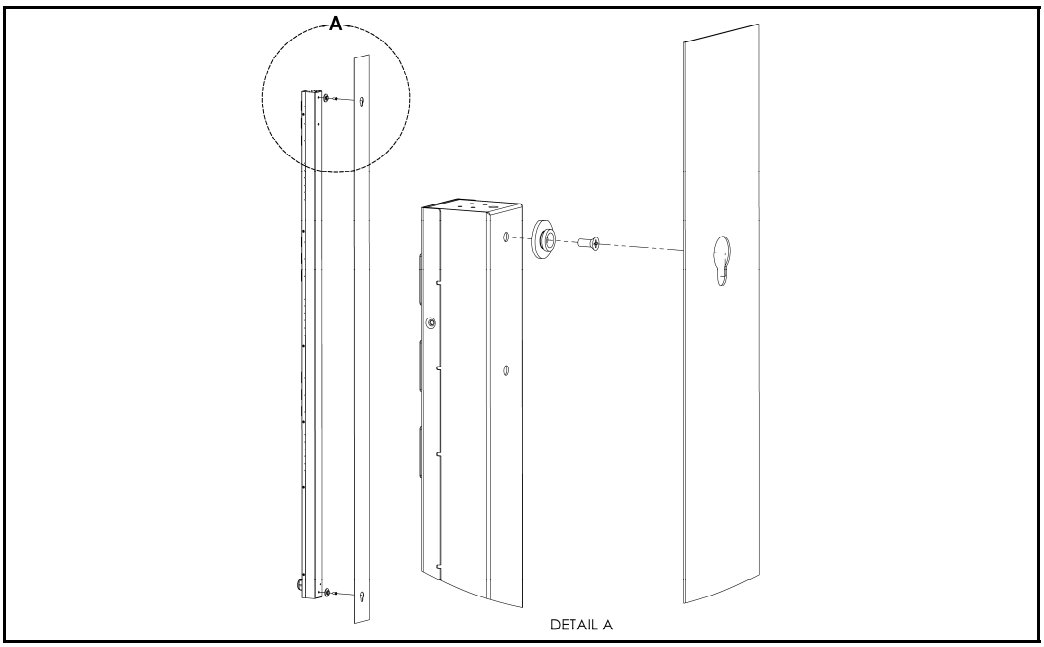

Toolless Mounting Hardware (11621)

Secure toolless mounting buttons to PDU as shown. Use toolless buttons with key-holed slots built into cabinet or with optional Geist key-holed brackets.

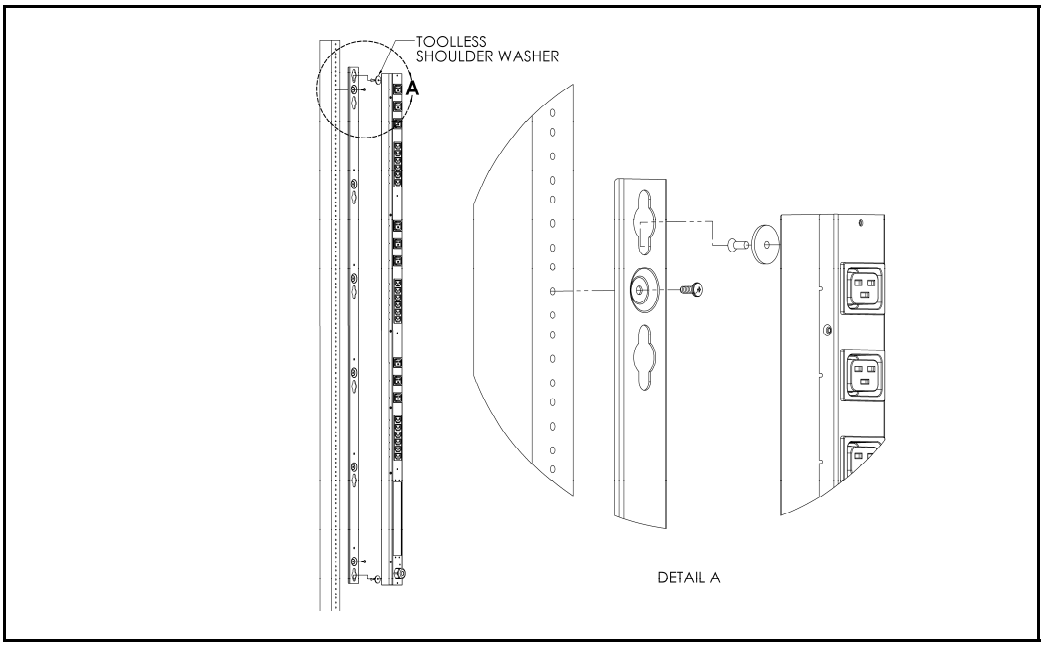

Toolless Full Length Bracket (TLFL)

Using full length toolless bracket and toolless mounting buttons, attach PDU to rack as shown

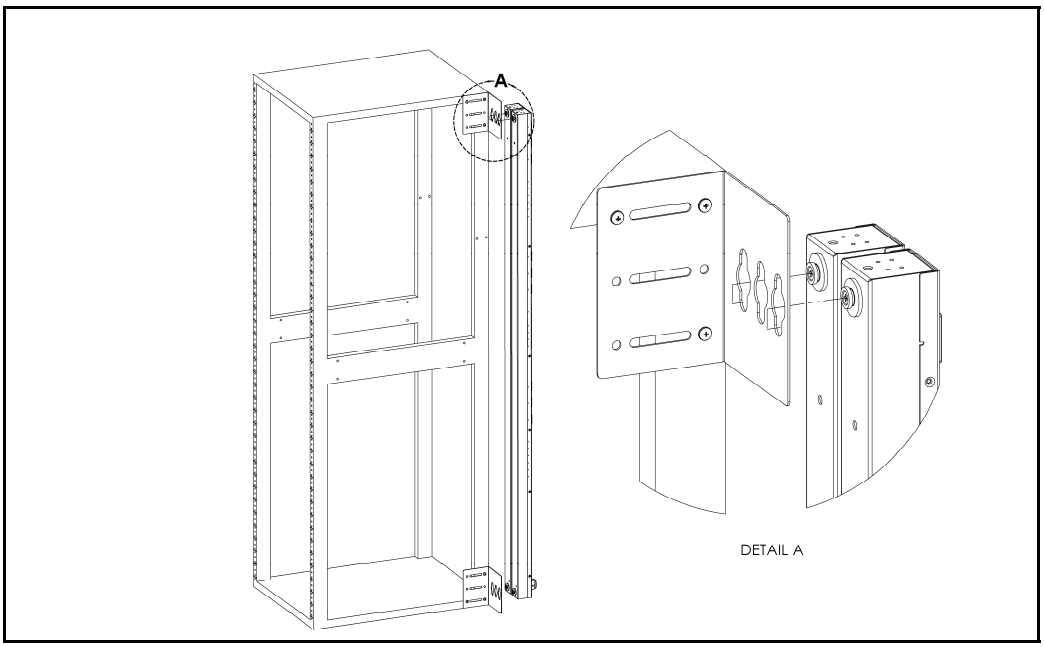

Single Side Mount 2 Unit Brackets (TSMX2)

Using single side mount 2 unit brackets and toolless mounting buttons, attach PDU to rack as shown

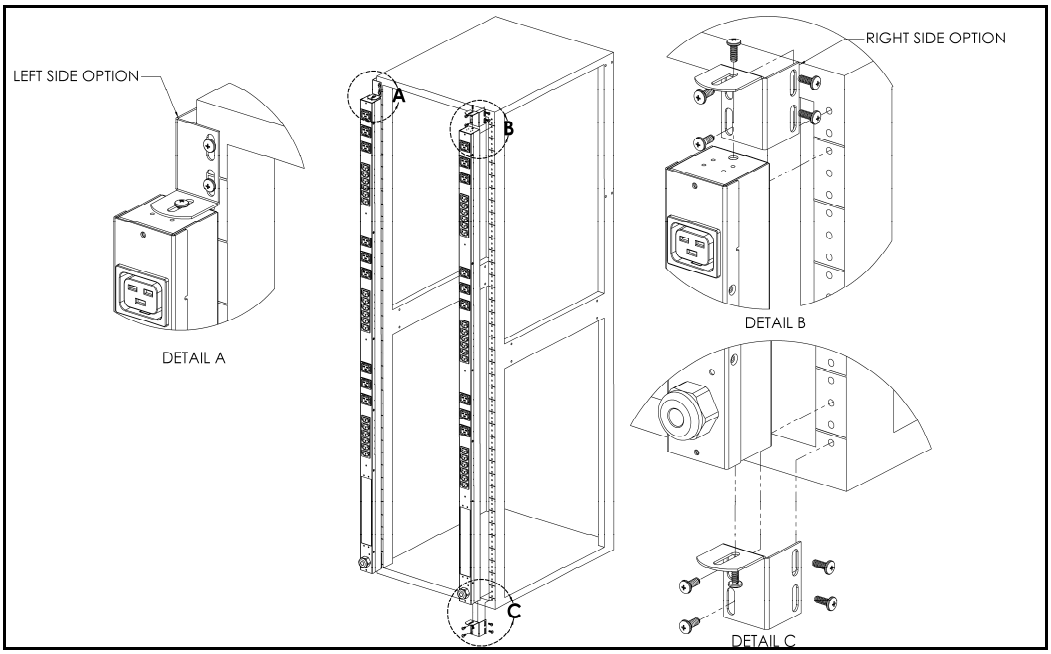

Offset/Side Mount Brackets (EZB-1)

Using the offset/side mount brackets, attach PDU to rack as shown.

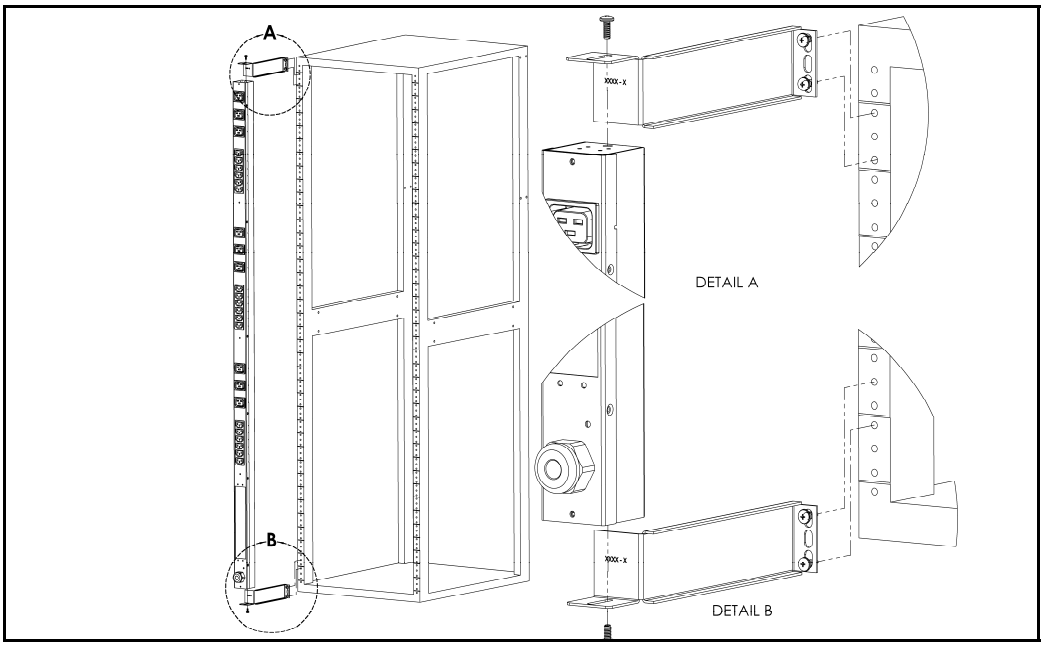

7" Extension Brackets (XB-7)

Using the 7” extension brackets, attach PDU to rack as shown

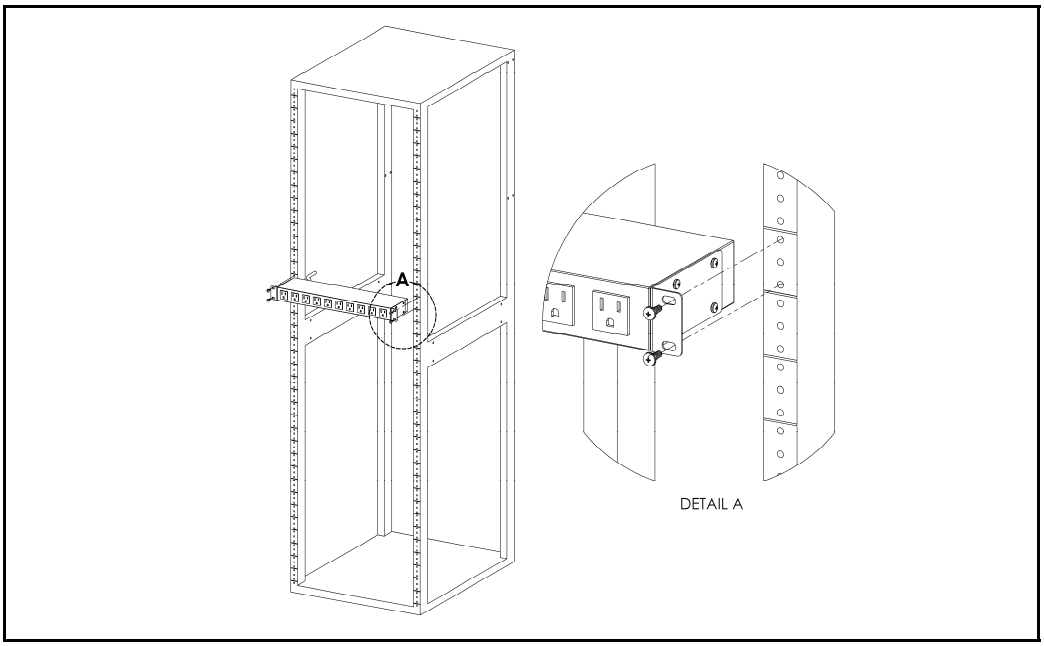

Flush Mount Brackets (FM)

Using flush mount brackets, attach PDU to rack as shown

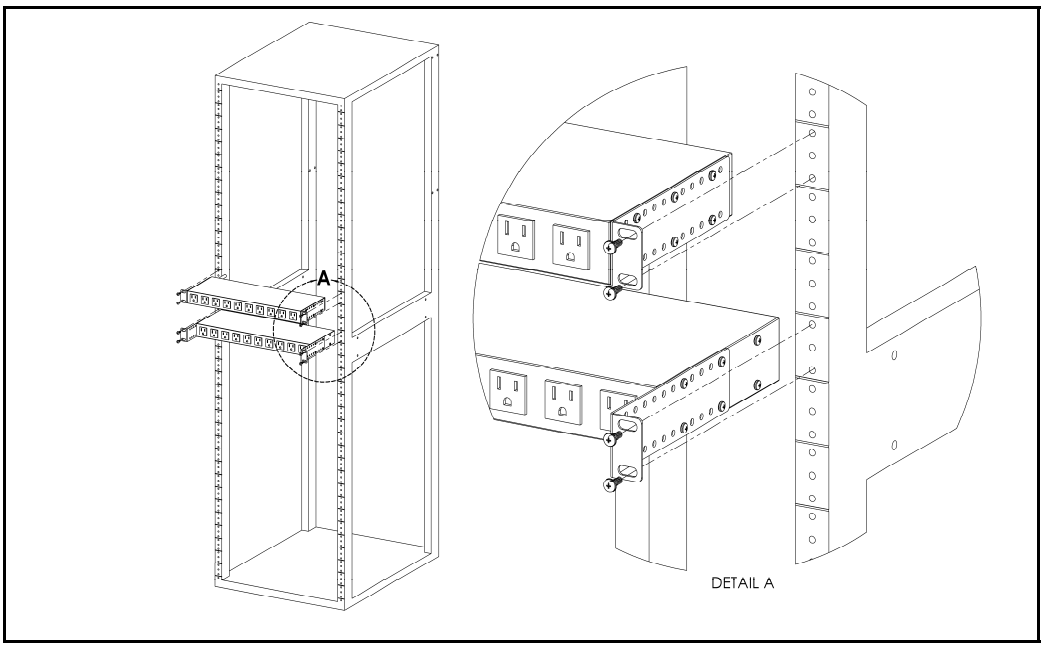

Adjustable Mount Brackets (AM)

Using adjustable mount brackets, attach PDU to rack as shown

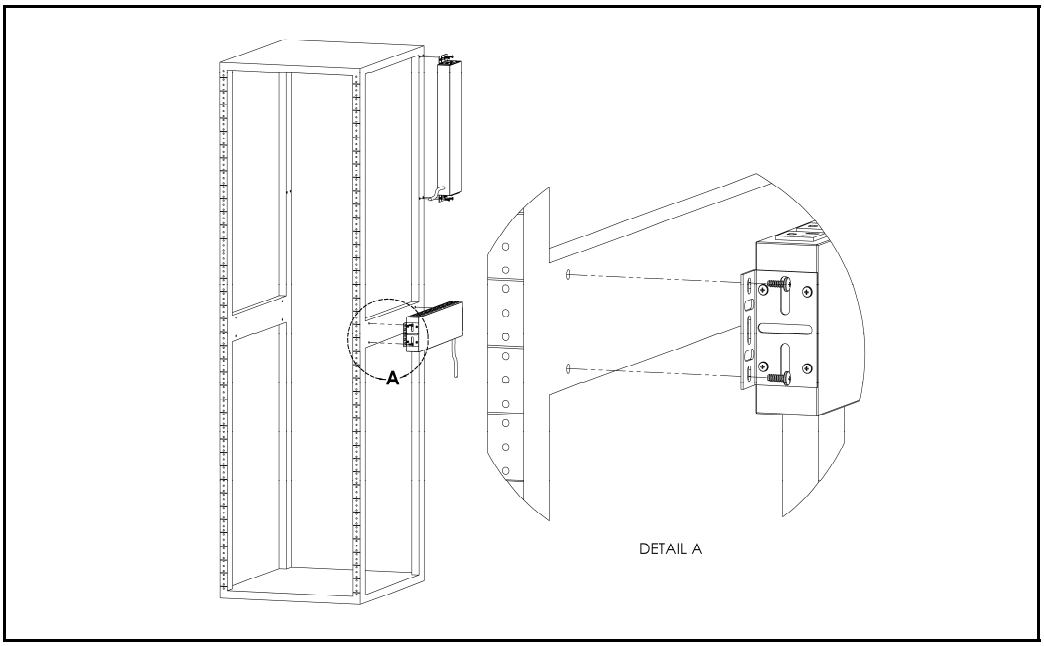

Panel Mount Brackets (PM)

Using panel mount brackets, attach PDU to rack as shown

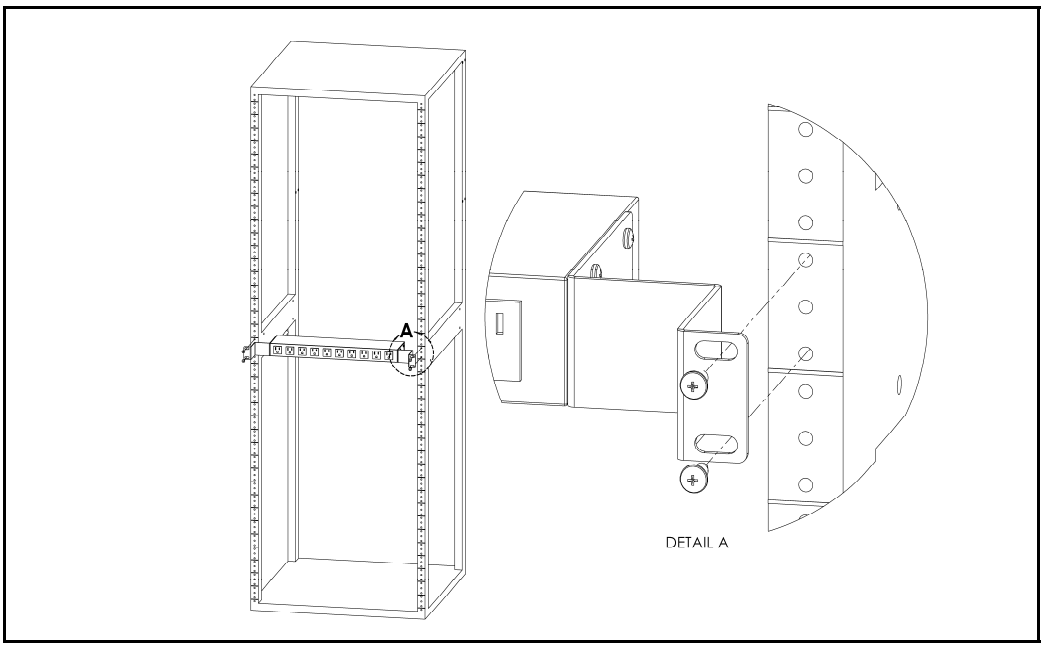

23" Conversion Mounting Brackets (23-RM)

Using conversion mounting brackets, attach 19” PDU to 23” rack as shown

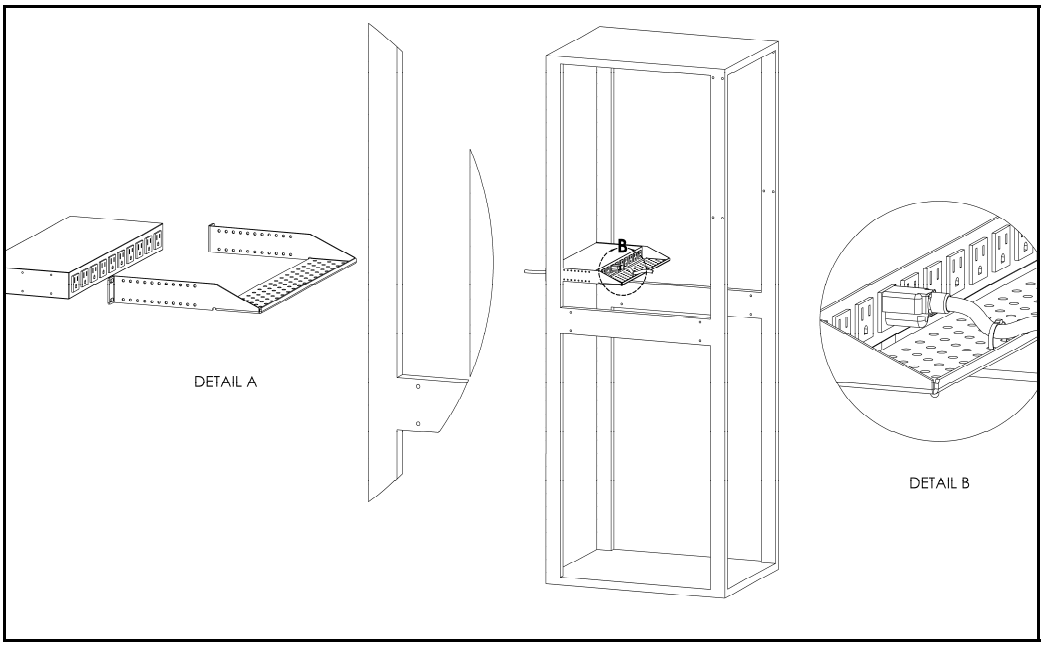

Cable Mount Bracket (CMB-1)

Attach cable mount bracket to PDU as shown; use tie-wraps to secure cords to bracket

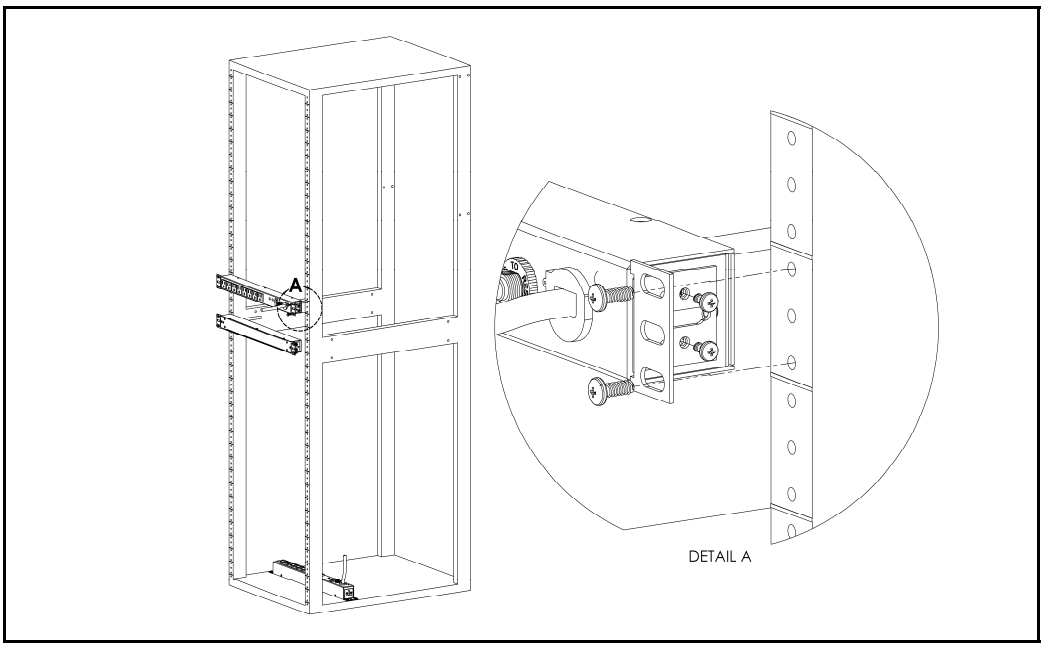

19" Horizontal/Panel Mount Brackets (7938)

Using the 19” horizontal/panel mount brackets, attach PDU to rack as shown

Optional Local Monitoring

Power Meter

The Geist PM-1 power meter is a low-power, high accuracy meter capable of measuring true RMS Current, Voltage, Power, and Power Factor. These values are individually shown on an easy to read, 4-digit LED Display, which continuously scrolls through the four different measured values. Each one of these displayed parameters is defined below. The Power Meter will automatically begin cycling through the displayed values when the PDU is connected to AC Mains power.

- Current: PDU output current draw measured in true RMS Amps
- Voltage: PDU output voltage measured in true RMS Voltage
- Power: PDU output power measured in Watts – referred to as real or active power
- Power Factor: Ration of real PDU output power to apparent PDU output power[2]

Power Meter Display

Current Meter

The Geist CM-1 current meter is a low-power, high accuracy meter capable of measuring true RMS Current. The value of current is continuously shown on an easy to read, 4-digit LED Display. The Current Meter will automatically begin to display value of output current when the PDU is connected to AC Mains power.

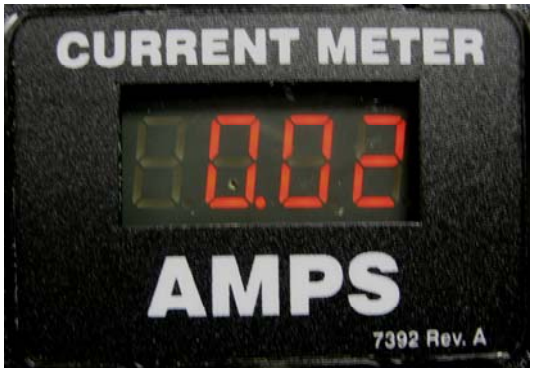

Current Meter Display

[2] Real power is the power in a circuit that is transformed from electric to non-electric energy, while apparent power is the total power supplied to the circuit.

Three Circuit Current Meter

The Geist CM-3 current meter is a low-power, high accuracy meter capable of measuring true RMS Current. The value of current per output circuit is shown on an easy to read, 4-digit LED Display. The display continuously scrolls through the three different measured values of output circuit current. The Current Meter will automatically begin to display value of output current when the PDU is connected to AC Mains power.

The CM-3 meter displays the circuit name followed by the circuit reading. All three circuits are displayed and the cycle is continuously repeated as illustrated in the figure below.

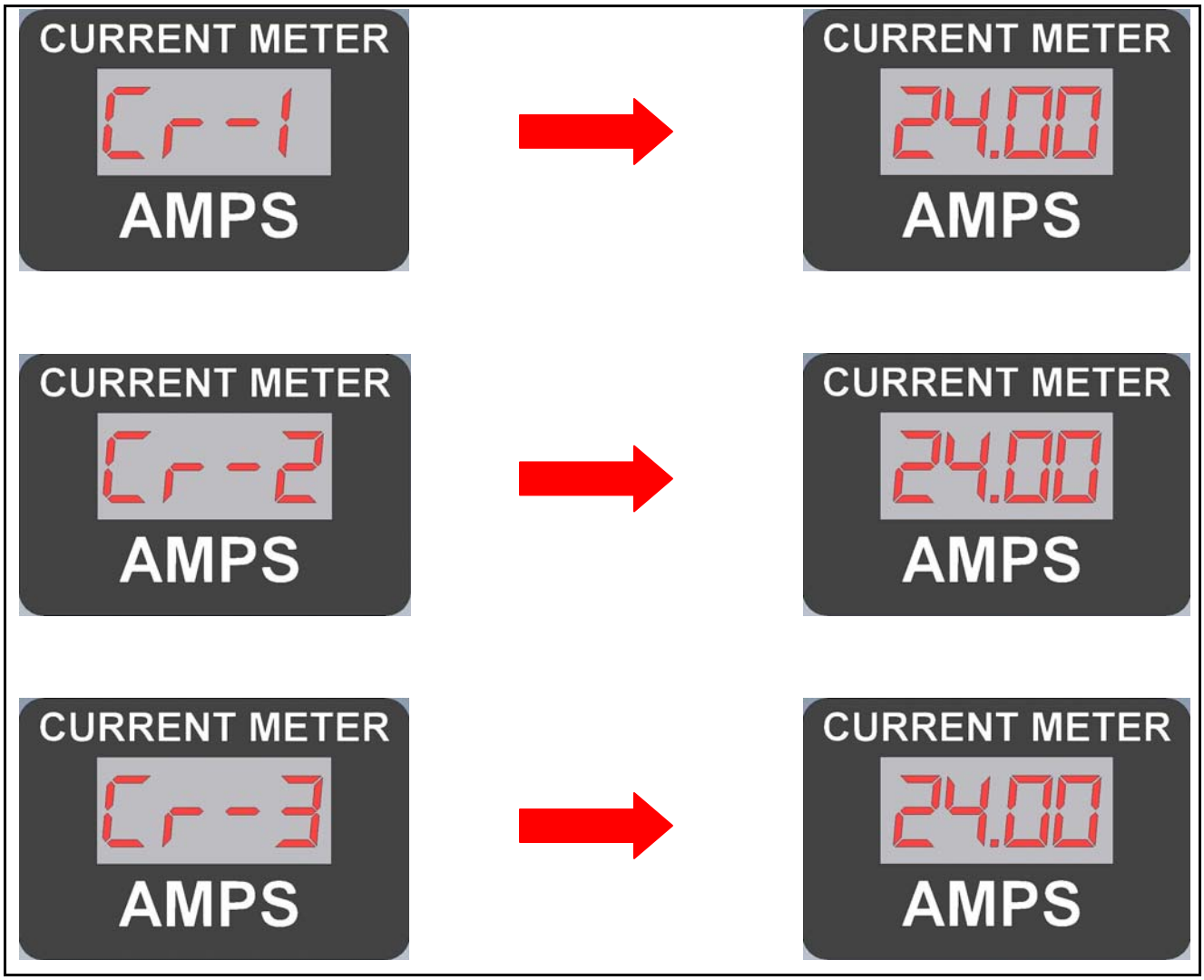

Three Circuit Current Meter Display Sequence

Optional Remote Monitoring

Current Monitoring Meter Overview

The Geist Current Monitoring Meter is a high accuracy meter capable of measuring true RMS current. The value of line current per input phase and output circuit current is shown on an easy to read, 4-digit LED Display.[3] The display continuously scrolls through the different measured values. The Current Monitoring Meter also provides access to measurement data and control values through a web page, SNMP, or XML. The *Current Monitoring Meter Instructions* section of this document will give more detailed information on the operation and functionality of the Current Monitoring Meter.

Current Monitoring Meter

Current Monitoring Meter Instructions

Setting an IP Address

The PDU comes preset with an IP address for initial setup and access to the unit. The 'Configuration page' contains the network properties. Access to the unit requires the IP address to be known, the IP address may be manually reset should the user-configured address be forgotten. The default address is:

IP Address: 192.168.123.123
Subnet Mask: 255.255.255.0
Gateway: 192.168.123.1

First time setup:

1. Connect PDU to your computer using a crossover cable or a hub.
2. On your computer, go to "Start > Settings > Control Panel > Network and Dial Up Connections."
3. Right Click on "Local Area Connection" and select "Properties."
4. Select the option to "Use the following IP address" and enter:
   IP address: 192.168.123.1
   Subnet mask: 255.255.255.0
   Default gateway: 192.168.123.1[4]

[3] Actual configuration of circuits measured by Current Monitoring Meter is PDU model specific. Please contact Geist Manufacturing's Customer Service department with questions on measurement configuration of Current Monitoring Meters.
[4] In some configurations, leaving the gateway field blank may resolve connectivity issues.

Click "OK" twice.

You can now access the unit using your web browser at the permanent IP address of 192.168.123.123.

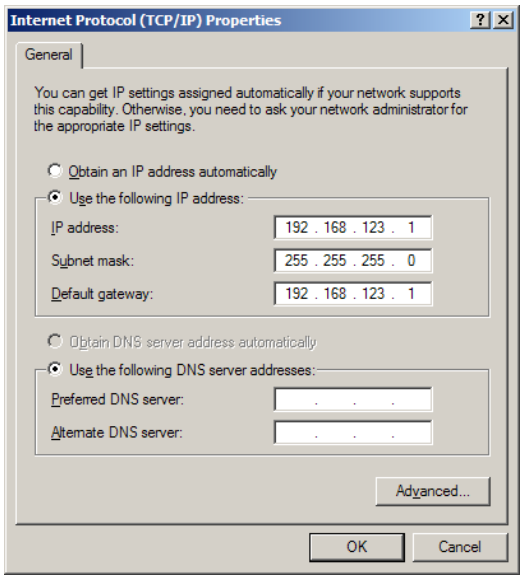

Typical Network Card Settings for PC or Laptop to connect to default IP address

<u>First time setup (MacOS 10.5 and 10.6):</u>

Open System Preferences via the Dock or the Apple menu.

Select "Network" under "Internet & Network."

Select "Ethernet" from the list on the left side of the window and enter these settings on the right side of the window:

- **Configure:** Manually
- **IP Address:** 192.168.123.1
- **Subnet Mask:** 255.255.255.0
- **Router:** Leave blank

Hit "Apply" and confirm the changes.
The unit should now be accessible in a web browser via the unit's permanent IP address: http://192.168.123.123/.

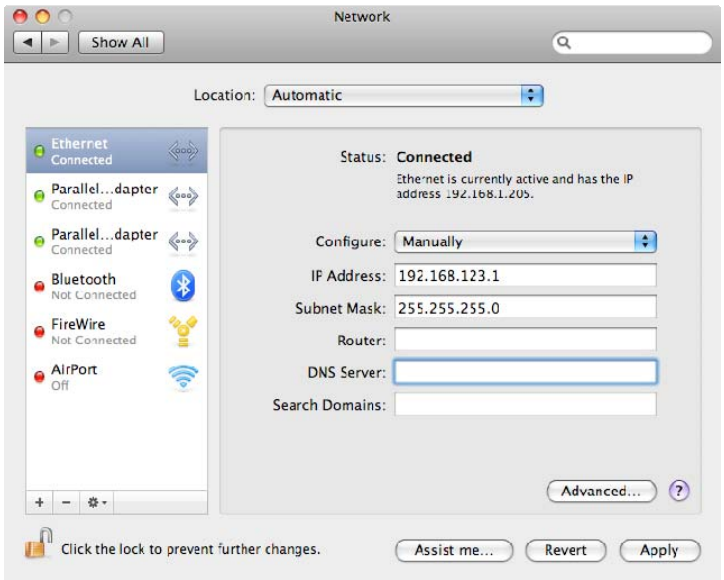

MacOS X network settings for initial setup

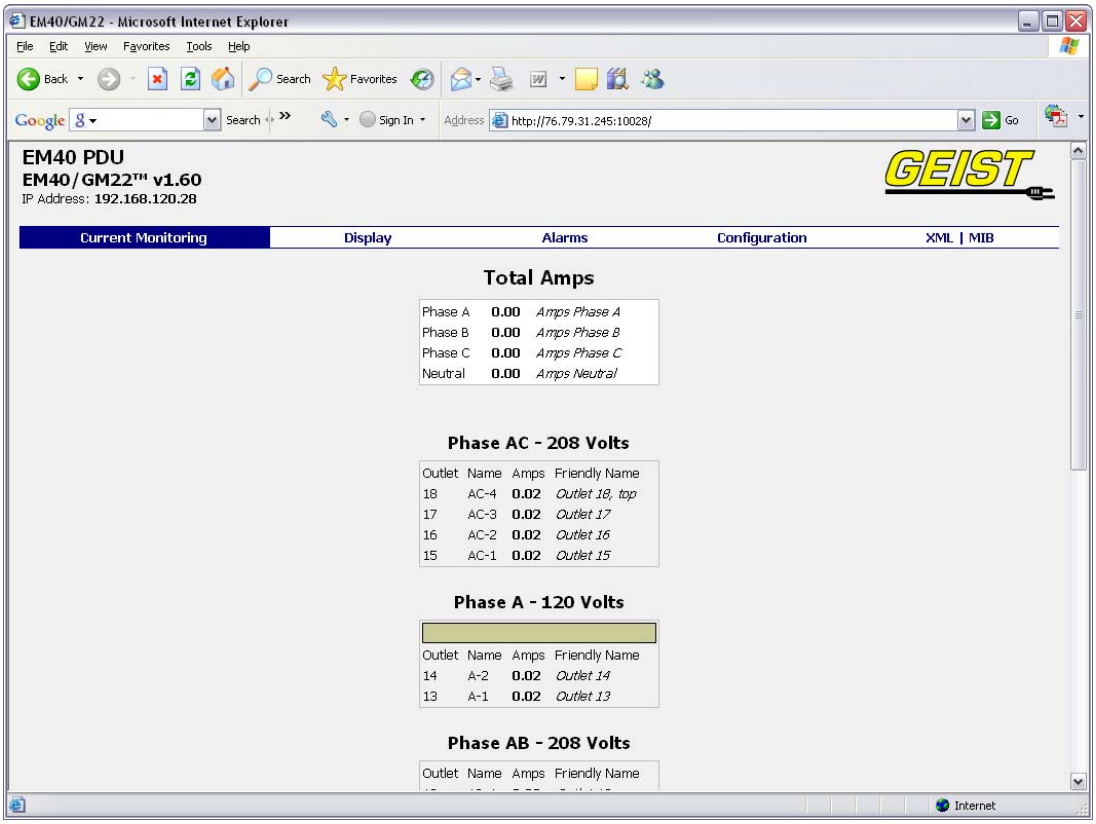

Connecting to the PDU using a web browser

LED Display

Each PDU has a built-in 4-digit LED display mounted midway down the chassis. The display scrolls through the most recent current measurement (in amps) for each circuit, one at a time. It displays a circuit name, pauses, and then displays the measurement. Momentarily press the "Pause Scroll/IP Address Reset" button on the front of the PDU to pause the display on the current measurement. While paused, the display will cycle back and forth between circuit name and current reading every three seconds. Momentarily pressing the "Pause Scroll/IP Address Reset" button again will skip ahead to the next circuit. The display will begin to scroll again thirty seconds after the last button push.

Notes: During the first cycle after the display has been paused, the display may take up to six seconds to display a measurement.

Due to the time required to measure current accurately, the same reading may be shown twice while the display is paused.

For reference:

Cr-1 = Circuit 1	Ph-A = Phase A
Cr-2 = Circuit 2	Ph-b = Phase B
Cr-3 = Circuit 3	Ph-C = Phase C
Cr-4 = Circuit 4	nEUt = Neutral
Cr-5 = Circuit 5	Fd-A = Feed A
Cr-6 = Circuit 6	Fd-B = Feed B

Viewing the IP Address/Resetting to Default IP

In the event that the IP address of the PDU is lost, it is possible to view the currently configured IP address on the unit's built-in LED display or reset the IP address to the default.

To view the IP address, press and hold the "Pause Scroll/IP Address Reset" button on the front of the PDU for 20 seconds. The screen will stop displaying scrolling power data in order to display the currently configured IP address. The display will show the IP address using the following format:

c-IP→aaa→.→bbb→.→ccc→.→ddd

The '→' indicates a pause and the aaa/bbb/ccc/ddd indicate a portion of the currently configured IP address. The IP address will be displayed twice before normal scrolling continues.

CAUTION: If the "Pause Scroll/IP Address Reset" button is being held while the second segment (bbb above) of the IP address is being displayed, the unit's IP address will be reset. To prevent this, release the button as soon as "c-IP" shows up on the display.

To reset the IP address to the backup IP address, press and hold the "Pause Scroll/IP Address Reset" button on the front of the PDU for 20 seconds, at which point the display will show the current IP address. Continue to hold the "Pause Scroll/IP Address Reset" button for 10 more seconds and the display will switch to scrolling d-IP→192→.→168→.→123→.→123. The IP address is then reset to 192.168.123.123. The display will resume its normal function after the display shows the IP address twice and the "Pause Scroll/IP Address Reset" has been released. Once the IP address has been reset, the *Setting an IP Address* instructions should be followed to access the unit.

Rebooting the Meter

Should an Current Monitoring Meter with firmware version 1.36 or higher installed stop responding to network traffic, it is possible to restore functionality by rebooting the meter without removing power from the PDU it is enclosed in.

To reboot the meter, press and hold the "Pause Scroll/IP Address Reset" button on the front on the PDU for 20 seconds. The screen will stop displaying scrolling power data in order to display the currently configured IP address. The display will show the IP address using the following format:

c-IP→aaa→.→bbb→.→ccc→.→ddd

The '→' indicates a pause and the aaa/bbb/ccc/ddd indicate a portion of the currently configured IP address. As soon as "c-IP" is displayed, release the "Pause Scroll/IP Address Reset" button. Press and release the "Pause Scroll/IP Address Reset" button twice while the IP address is being displayed. The screen will read "8.8.8.8." for a few seconds and then resume scrolling normally, indicating a successful reboot.

Web Page

The main interface to the PDU is its web page, accessible by typing the unit's IP address into a web browser. The web page is the source for the most up to date measurement of each circuit. All measurements are in Amps.

SNMP/XML

In addition to HTML based web pages, the PDU presents its data via SNMP and an XML page.

To use the PDU with SNMP Client software, download the MIB from the link on the unit's web page and import it into the SNMP software. Contact the client software manufacturer for instructions specific to their software. The PDU's SNMP community comes preset to 'public'. To change this, go to the 'Configuration' page, enter a new name in the SNMP Community box and hit "Save Changes." In addition SNMP traps can be utilized to monitor a user set threshold for each circuit, alarm settings and SNMP server settings are located on the 'Configuration' page.

The XML page provides terse output that is easily parsed by both humans and computers and is useful for creating scripts to download and process information off the unit automatically. The XML page is available at http://<IP address of meter>/data.xml.

Sample uses of XML and SNMP data are provided in the *Sample Usage* section of this document.

Firmware Updates/Instructions

The unit firmware is field upgradeable via FTP. Firmware updates and instructions are available at the following website.

http://www.geistmfg.com/GeistUS/Docs/downloads.htm

Sample Usage

The simplest way to get data from a Current Monitoring Meter into a script is via the XML page. Simply performing an HTTP GET (as a web browser does) on http://<IP address of meter>/data.xml will download the XML file. The following examples assume that the meter's IP address is 192.168.123.123.

Perl Example:

```
using LWP::UserAgent;
my $ip = "192.168.123.123";
my $browser = LWP::UserAgent->new;
$browser->timeout(5);
my $xmlFile = $browser->get("http://" . $ip . "/data.xml" )->content;
```

At this point, $xmlFile will contain the text of data.xml, ready to be parsed however necessary.

Unix/Linux Command Line Example:

```
wget http://192.168.123.123/data.xml
```

This command will download data.xml into the current directory. At this point, the file is ready to be used by any local application or script.

SNMP Example

Getif is a simple, free SNMP viewer for Windows available from:
http://www.wtcs.org/snmp4tpc/getif.htm

1. Drop the EM meter's MIB file into Getif's MIBs directory (Typically C:\Program Files\Getif 2.3.1\MIBs) and start Getif.
2. Type in the unit's IP address into the box labeled "Host Name" and click the Start button.

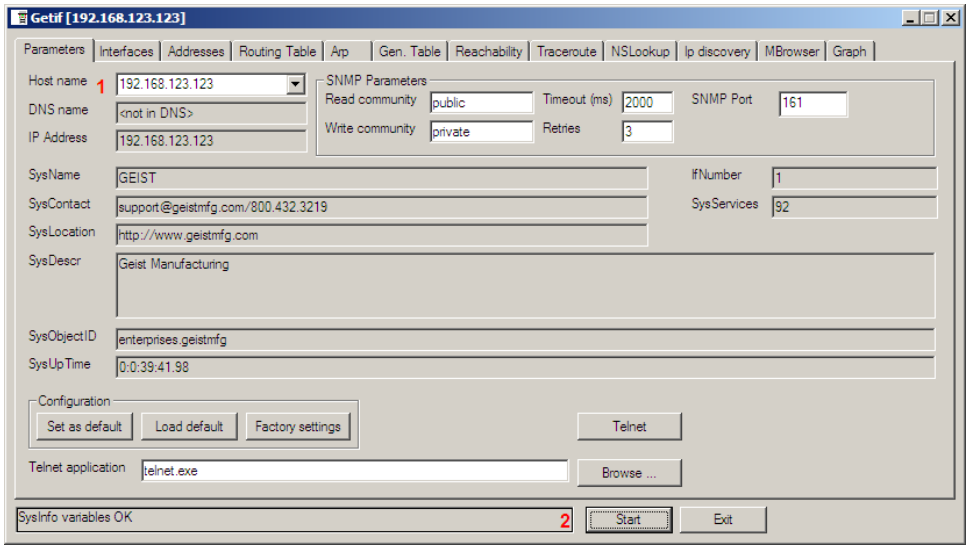

Getif Configuration Example

3. Click the 'MBrowser' tab and expand the .iso tree down to geistmfg.
4. Select geistmfg and click the Start button. Getif should start requesting data from the unit via SNMP and display it in the large box at the bottom of the window.

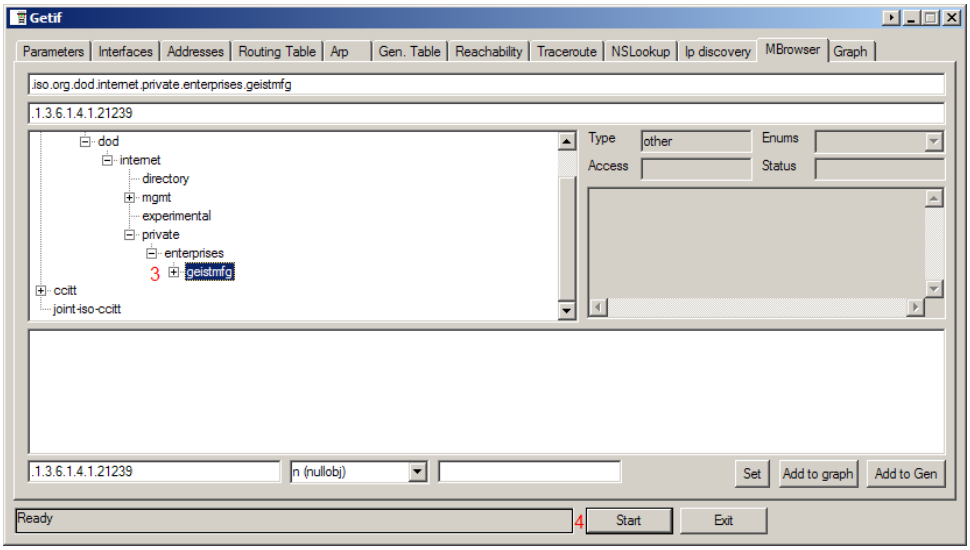

Getif Geist Entry in MIB Table

Satellite Current Monitoring Meter Overview

The Geist Satellite Current Monitoring Meter is a high accuracy meter capable of measuring true RMS current. The value of line current per input phase and output circuit current is shown on an easy to read, 4-digit LED Display.[5] The display continuously scrolls through the different measured values. The Satellite Current Monitoring Meter reports data as an external sensor to the Geist RSMINI163, RSE, RSO, RSM, RCX, RCM or RCU master units (not compatible with RSMINI-P or FC-3-2) via an RJ-12 uplink. Up to 4 Satellite Current Monitoring units can be connected to a single master.[6]

[5] Actual configuration of circuits measured by Current Monitoring Meter is PDU model specific. Please contact Geist Manufacturing's Customer Service department with questions on measurement configuration of Current Monitoring Meters.

[6] Satellite Current Monitoring Meter unit and master unit must be grounded to the same ground.

LED Display

Each PDU has a built-in 4-digit LED display mounted midway down the chassis. The display scrolls through the most recent current measurement (in amps) for each circuit, one at a time. It displays a circuit name, pauses, and then displays the measurement. Momentarily press the "Scroll" button on the front of the PDU to pause the display on the current measurement. While paused, the display will cycle back and forth between circuit name and current reading every three seconds. Momentarily pressing the "Scroll" button again will skip ahead to the next circuit. The display will begin to scroll again thirty seconds after the last button push.

Notes: During the first cycle after the display has been paused, the display may take up to six seconds to display a measurement.

Due to the time required to measure current accurately, the same reading may be shown twice while the display is paused.

For reference:

Cr-1 = Circuit 1	Ph-A = Phase A
Cr-2 = Circuit 2	Ph-b = Phase B
Cr-3 = Circuit 3	Ph-C = Phase C
Cr-4 = Circuit 4	nEUt = Neutral
Cr-5 = Circuit 5	Fd-A = Feed A
Cr-6 = Circuit 6	Fd-B = Feed B

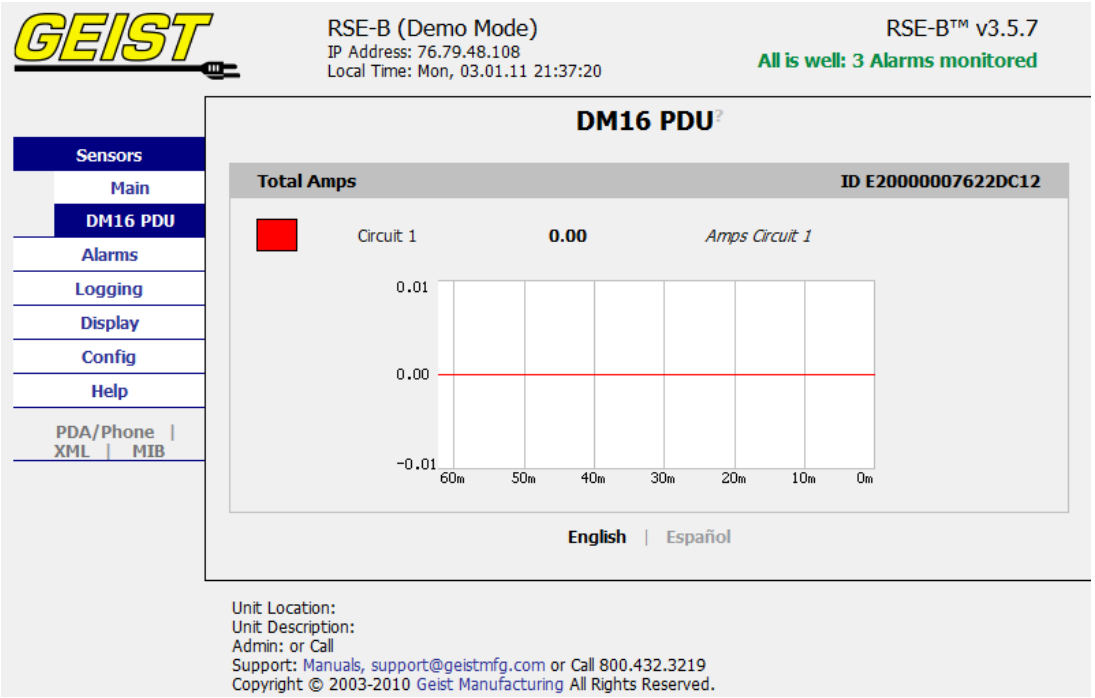

DM-16 PDU Display on R-Series Master Unit

Serial Communication

Satellite Current Monitoring Meter is also capable of serial communication via a serial terminal or console. The RJ-12 port on the unit can be connected to other serial devices via an adapter cable. The serial interface can be used to view unit version, # of channels, and current measurement data.

RJ-12 Pin-Out for Serial Cable

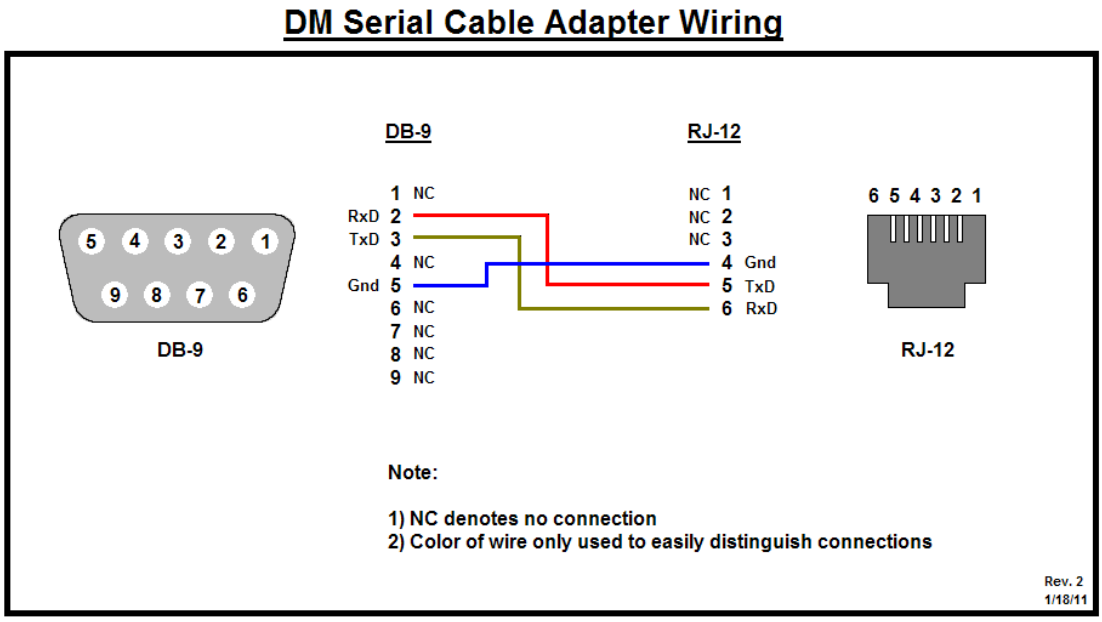

DB-9 to RJ-12 Pin-Out Diagram

Pins 1-3 on RJ-12 connector must be left un-terminated for proper communication. Pin 1 is located closest to the red reset button on the meter.

Serial Command List

```
>help
HELP:   version        Product version
        main           Number of main channels
        total          Total number of channels
        report all/#   Report current data
        echo on/off    Turn echo on/off
        help           Display this menu
```

Service / Tech Support

Service and Maintenance

No service or maintenance is required. Do not attempt to open the PDU or you may void the warranty. No serviceable parts inside. It is recommended that power be removed from the unit before installing or removing any equipment.

More Technical Support

http://www.geistmfg.com
(800) 432-3219
Email: support@geistmfg.com
Or contact your distributor.

Table of Figures

Full Length Bracket 6
Mini "L" Brackets (SLB-4) 6
Vertical Extension Brackets (VCB-1) 7
Toolless Mounting Hardware (11621) 7
Toolless Full Length Bracket (TLFL) 8
Single Side Mount 2 Unit Brackets (TSMX2) 8
Offset/Side Mount Brackets (EZB-1) 9
7" Extension Brackets (XB-7) 9
Flush Mount Brackets (FM) 10
Adjustable Mount Brackets (AM) 10
Panel Mount Brackets (PM) 11
23" Conversion Mounting Brackets (23-RM) 11
Cable Mount Bracket (CMB-1) 12
19" Horizontal/Panel Mount Brackets (7938) 12
Power Meter Display 13
Current Meter Display 13
Three Circuit Current Meter Display Sequence 14
Current Monitoring Meter 15
Typical Network Card Settings for PC 16
or Laptop to connect to default IP address 16
MacOS X network settings for initial setup 17
Connecting to the PDU using a web browser 17
Getif Configuration Example 20
Getif Geist Entry in MIB Table 21
DM-16 PDU Display on R-Series Master Unit 22
DB-9 to RJ-12 Pin-Out Diagram 23

Revision History

Revision	Date	Notes	Approved By
1.0	5/20/2010	Original Published Version	BP
1.1	7/1/2010	Minor Text Updates	BP
1.2	1/24/11	Added Satellite Current Monitoring	SC & BP