MODULAR MOUNT

MM-1000 SERIES FOR EXISTING POLE UPGRADES

The challenge for retailers, warehouses and distribution centers when implementing technology is how to maximize limited space to mount that technology, while ensuring it is ergonomic and easy to use. Installed modular mounting solutions are regularly upgraded to utilize new technology, however the user often has no choice on where they can source this upgrade.

The exciting news is that the new MM-1000 Modular Mounting solution from ENS Group gives the user complete solution options to manage the space at their checkout or workstation and also to upgrade existing installations.

The MM-1000 Modular Mount incorporates a new generation of engineered materials for a durable & strong, yet modern looking POS solution. Designed to be great value, easy to order, install & upgrade.



MM-1000 FEATURES

- ✓ Uses the latest Engineered Polyamide Alloy materials for durability and industry leading design for today's markets
- ✓ Offers a cost-effective solution for upgrading existing Pole based POS systems and workstations
- ✓ Tool-less tilt tensions adjustments on your Payment Terminal Mount
- ✓ Product Configurator to easily order exactly what you need (Coming soon)

Watch Product Video

Product Configurator (Coming Soon)

For technical or order inquiries contact:
N. America Sales: (952)-767-1005 | **Email: ENSNAmerica@ens-co.com** | **Visit** ens-co.com

Get in Touch ✓

Copyright © 2021 ENS Group

MM-1000 SERIES FOR EXISTING POLE UPGRADES

LET OUR PRODUCT CONFIGURATOR CREATE YOUR POS SOLUTION

MONITOR MOUNT OPTIONS



OR...



Single Pivot with Collar Mount OR Collar Arm*



OR...



Double Pivot with Collar Mount OR Collar Arm*

*Extension Arm is 8” (200mm) long

PAYMENT MOUNT OPTIONS



Payment Mount
(Use with Collar Arm* only)
*Extension Arm is 8” (200mm) long

PLUS...



Any FlexiPole Backplate

AND IF LOCKING IS REQUIRED –



Ken00148 Tether

OR



SD0005 Latch

SUPPORTS ALL MAJOR PAYMENT DEVICES

ingenico GROUP · Verifone · Worldline · SPECTRA Technologies · CASTLES TECHNOLOGY · PAX

N. America Sales: (952)-767-1005 | Email: ENSNAmerica@ens-co.com | Visit ens-co.com

For technical or order inquiries contact:

Get in Touch ✓

Copyright © 2021 ENS Group

MM-1000 SERIES FOR EXISTING POLE UPGRADES

LET OUR PRODUCT CONFIGURATOR CREATE YOUR POS SOLUTION

PRINTER MOUNT OPTIONS



Printer Mount - Small
(Use with Collar Arm* only)

OR...



Printer Mount - Large
(Use with Collar Arm* only)

*Extension Arm is 8” (200mm) long

SCANNER MOUNT OPTION

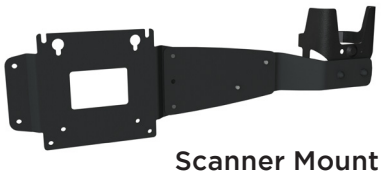

Scanner Mount

Attaches to
75mm/100mm
VESA Monitors
from 15” (381mm) to
20” (508mm) wide

EXAMPLE CONFIGURATIONS



Single Monitor
Mount



Dual Monitor
Mount with
Printer Mount



Dual Monitor
Mount with
Payment Mount

For technical or order inquiries contact:
N. America Sales: (952)-767-1005 | **Email: ENSNAmerica@ens-co.com** | **Visit** ens-co.com

Get in Touch ✓

Copyright © 2021 ENS Group

MM-1000 SERIES FOR EXISTING POLE UPGRADES

PRODUCT NUMBERS AND DATA

MM-10-201

- Collar Mount, use with existing 45mm Dia Poles, Rotates up to 320 degrees
- Shipping Dimensions: 4.56” L X 4.56” W X 3.56” D
- Shipping Weight (lbs/kg): .21/.09
- Use for attaching Single or Double Pivot Monitor Mount close to your existing 1.75” (45mm) Dia Pole



MM-10-202

- Collar Arm 8” (200mm), use with existing 45mm Dia Poles, Rotates up to 320 degrees
- Shipping Dimensions: 5.13” L X 3.62” W X 8.0” D
- Shipping Weight (lbs/kg): 3.00/1.36
- Use for positioning your Monitor Mount away from your existing Pole



MM-10-301

- Monitor Mount, Single Pivot (up/down), for 75/100mm VESA compliant Monitors
- Shipping Dimensions: 4.56” L X 4.56” W X 3.56” D
- Shipping Weight (lbs/kg): .29/.13
- Max Monitor Weight: 15 lbs

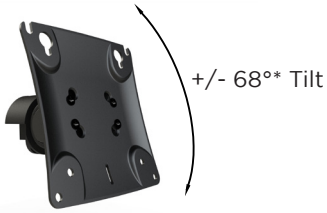

MM-10-302

- Monitor Mount, Double Pivot (up/down and Left/Right), for 75/100mm VESA compliant Monitors
- Shipping Dimensions: 4.56” L X 4.56” W X 5.56” D
- Shipping Weight (lbs/kg): .57/.26
- Max Monitor Weight: 15 lbs

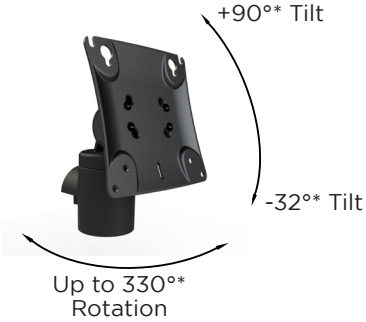

***Tilt/rotation limits are subject to Monitor size and position on pole.**

For technical or order inquiries contact:
N. America Sales: (952)-767-1005 | Email: ENSNAmerica@ens-co.com | Visit ens-co.com

Get in Touch ✓

Copyright © 2021 ENS Group

MM-1000 SERIES FOR EXISTING POLE UPGRADES

PRODUCT NUMBERS AND DATA

MM-10-401

- Payment Terminal Mount, Includes Plinth for all Tailwind FlexiPole Backplates
- Shipping Dimensions: 5.06” L X 4.62” W X 8.06” D
- Shipping Weight (lbs/kg): .44/.20
- Add any FlexiPole Backplate to complete this product
- Note: To mount an ENS Metal Stand Conversion, use product MM-10-402 & contact ENS Sales for proper Conversion part number



MM-10-501

- Printer Mount, small, for Printers with bases up to 5.7” (145mm) Wide X 6” (153mm) Deep
- Shipping Dimensions: 7.13” L X 7.13” W X 3.88” D
- Shipping Weight (lbs/kg): 1.14/.52



MM-10-502

- Printer Mount, large, for Printers with bases up to 7.8” (198mm) Wide X 11.26” (286mm) Deep
- Shipping Dimensions: 12.63” L X 8.13” W X 3.88” D
- Shipping Weight (lbs/kg): 2.34/1.06

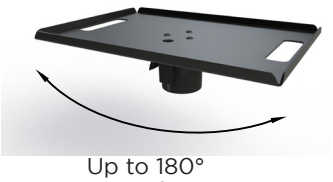

MM-10-601

- Scanner Mount, for Hand-held Scanners - works with VESA Monitors 15” (381mm) to 20” (508mm) wide
- Shipping Dimensions: 5.18” L X 4.50” W X 10.38” D
- Shipping Weight (lbs/kg): 3.14/1.42



For technical or order inquiries contact:
N. America Sales: (952)-767-1005 | **Email: ENSNAmerica@ens-co.com** | **Visit** ens-co.com

Get in Touch

Copyright © 2021 ENS Group

MM-1000 SERIES FOR EXISTING POLE UPGRADES

PRODUCT DIMENSIONS

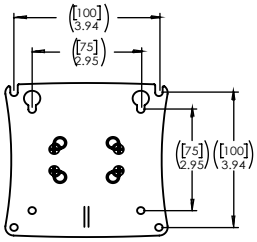

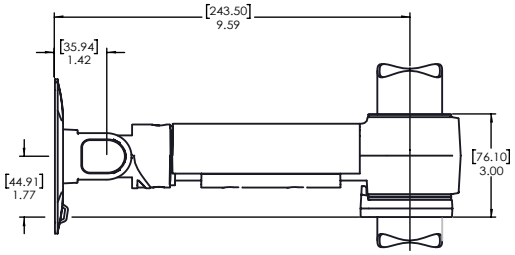

Single Pivot Monitor Arm

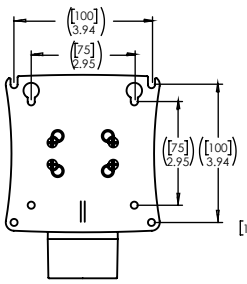

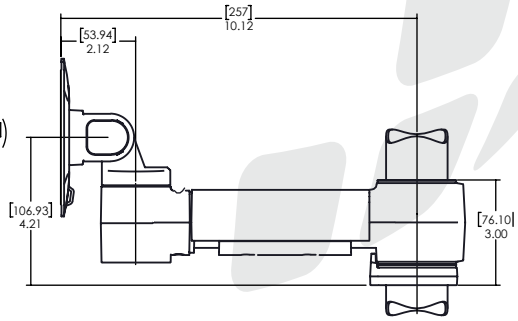

Double Pivot Monitor Arm

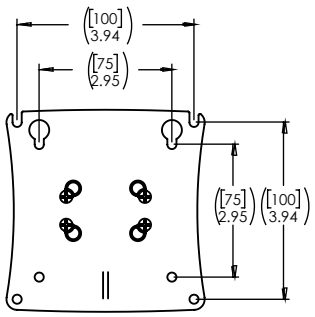

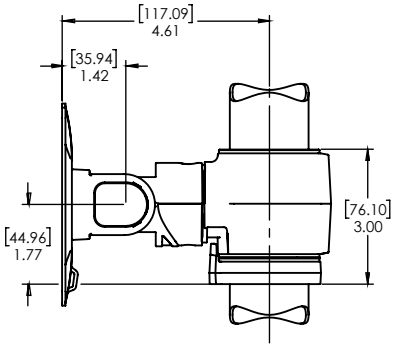

Single Pivot Monitor Mount

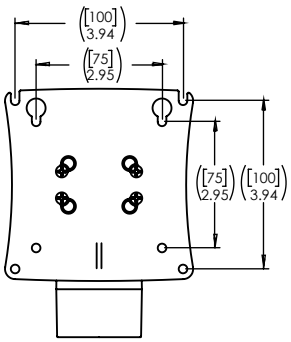

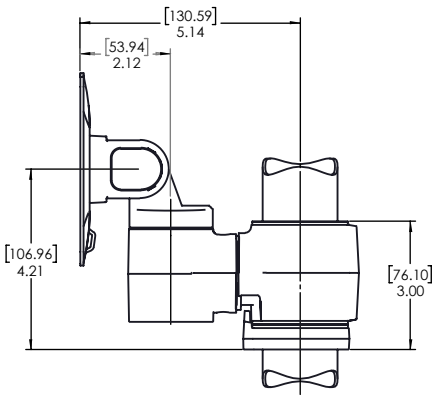

Double Pivot Monitor Mount

For technical or order inquiries contact:

N. America Sales: (952)-767-1005 | Email: ENSNAmerica@ens-co.com | Visit ens-co.com

Get in Touch ✓

Copyright © 2021 ENS Group

MM-1000 SERIES FOR EXISTING POLE UPGRADES

PRODUCT DIMENSIONS

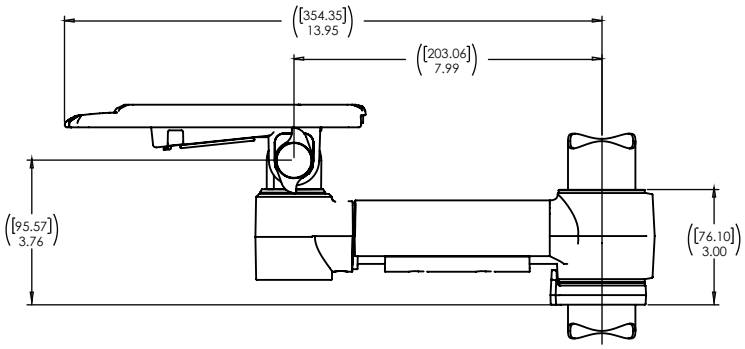

Payment Terminal Mount

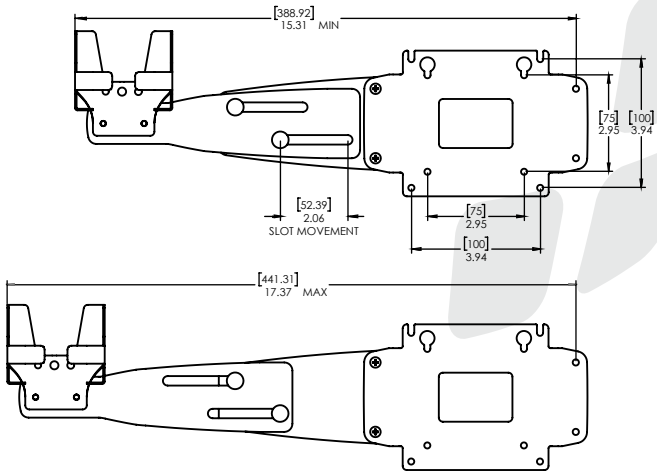

Scanner Mount

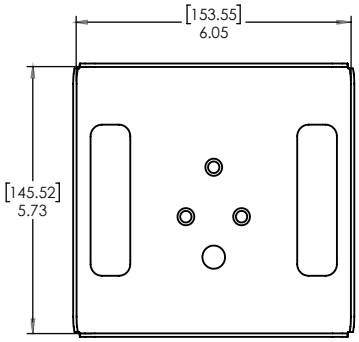

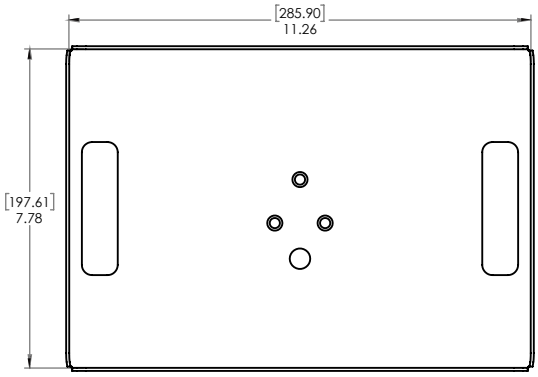

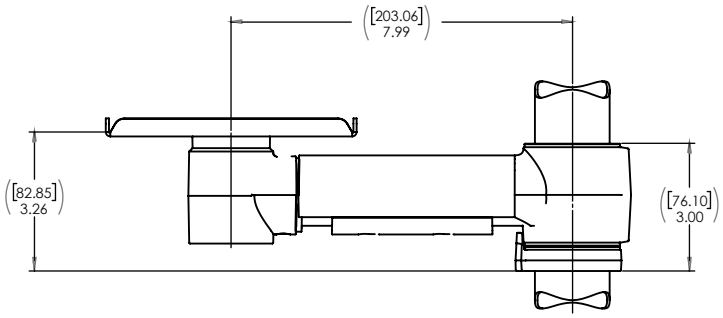

Printer Mount, Small

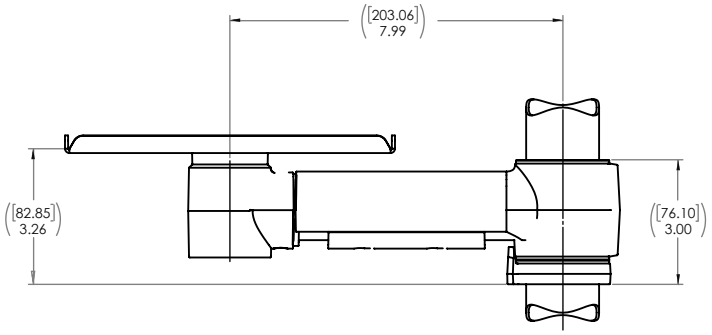

Printer Mount, Large

For technical or order inquiries contact:

N. America Sales: (952)-767-1005 | **Email: ENSNAmerica@ens-co.com** | **Visit** ens-co.com

Get in Touch ✓

Copyright © 2021 ENS Group