PX3-1135U-E2N1Q1V2
400V, 3Φ Wye
32A, 22.2kVA

Technical Specifications / Engineering Submittals

Raritan Model Number: PX3-1135U-E2N1Q1V2

rev20170831

LINE DRAWING

FEATURES

Energy Metering	Voltage (V), Current (A), Active Power (kW), Real Power (kVA), Energy (kWh), Power Factor
Metering Accuracy	ISO/IEC 62053-21 1%
Metering per Input Line	Yes
Metering per Branch Circuit Breaker	Yes
Metering per Output Receptacle	No
Remote Outlet Switching	No
Environmental Sensor Ready	Yes
Replaceable Controller	Yes
Compatible Sensors	Temperature, Humidity, Air Flow, Differential Pressure, Water Leak, and Contact Closure
Networking	Gigabit (10/100/1000 BaseT) Ethernet port; secondary, redundant (10/100 BaseT) Ethernet port. Optional WiFi (802.11a/b/g/n)
Remote Management	HTTP(s); SSH; Telnet; RS-232 (Serial); Power IQ; SNMP version v2/v3; SMTP; JSON-RPC
Cascading	Yes, Max 16 PDUs can be daisy chained using a single Ethernet or USB connection
Onboard Display	Color, matrix LCD display : Voltage, current, or active power (per line or per breaker); Alarms; Configuration information (name, ratings, IP / Networking information); Auto-flip orientation
Embedded Processor	ARM Cortex A5 536MHZ (Atmel A5D35A), 16MB SPI Flash, 64MB DDR2 RAM

Raritan
A brand of legrand

Technical Specifications / Engineering Submittals

Raritan Model Number: PX3-1135U-E2N1Q1V2

rev20170831

INPUT

Input Plug	IEC 60309 3P+N+E 6h 32A (4P5W)
Cord Length	3 meters (9.84 feet) standard
Cord Entry	Top-end feed
Cable Type	IP44("splashproof")
Number of Power Cords	1
Maximum Input Current	32A
Nominal Input Voltage	400V 3 phase
Rated Input Voltage	380 - 415V 3 phase
Input Frequency	50/60Hz
Power Capacity	21.1kVA at 380V, 23.0kVA at 415V

OUTPUT

Nominal Output Voltage	230V
Rated Output Voltage	220 - 240V
Receptacles (Output Connections)	(50) IEC60320 C13 Locking, 10A
Securelock Support	Yes
Cord Retention	No
Overload Protection	(6) LEGBXA6-16

PHYSICAL

Color	Black powder coat (custom colors available)
Unit Dimensions (WxDxH)	2.1" x 2.6" x 80.5" ; 52mm x 65mm x 2044mm
Unit Weight	9.2 kg
Shipping Weight	12.8 kg
Shipping Dimensions (WxDxH)	14.37" x 5.31" x 93.46" ; 365mm x 135mm x 2374mm
Mounting	Tool-less button mount

Technical Specifications / Engineering Submittals

Raritan Model Number: PX3-1135U-E2N1Q1V2

rev20170831

ENVIRONMENTAL

Operating Temperature	60°C
Operating Relative Humidity	85%
Operating Elevation	0-10000ft

CONFORMANCE

Regulatory Approvals	CE, Canada ICES-003, Part 15 Class A of the FCC rules, RoHS compliant
Warranty	Standard 2 years manufacturer warranty

Technical Specifications / Engineering Submittals

Raritan Model Number: PX3-1135U-E2N1Q1V2

rev20170831

CONTROL PANEL

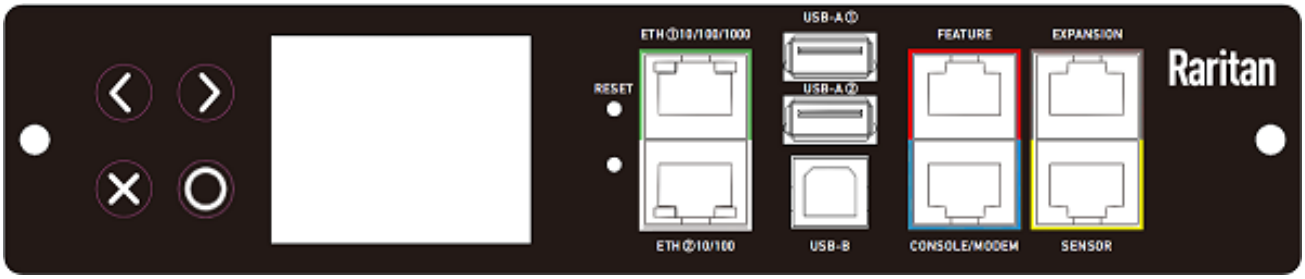

Technical Specifications / Engineering Submittals

Raritan Model Number: PX3-1135U-E2N1Q1V2

rev20170831

ELECTRICAL (ONE LINE) DIAGRAM

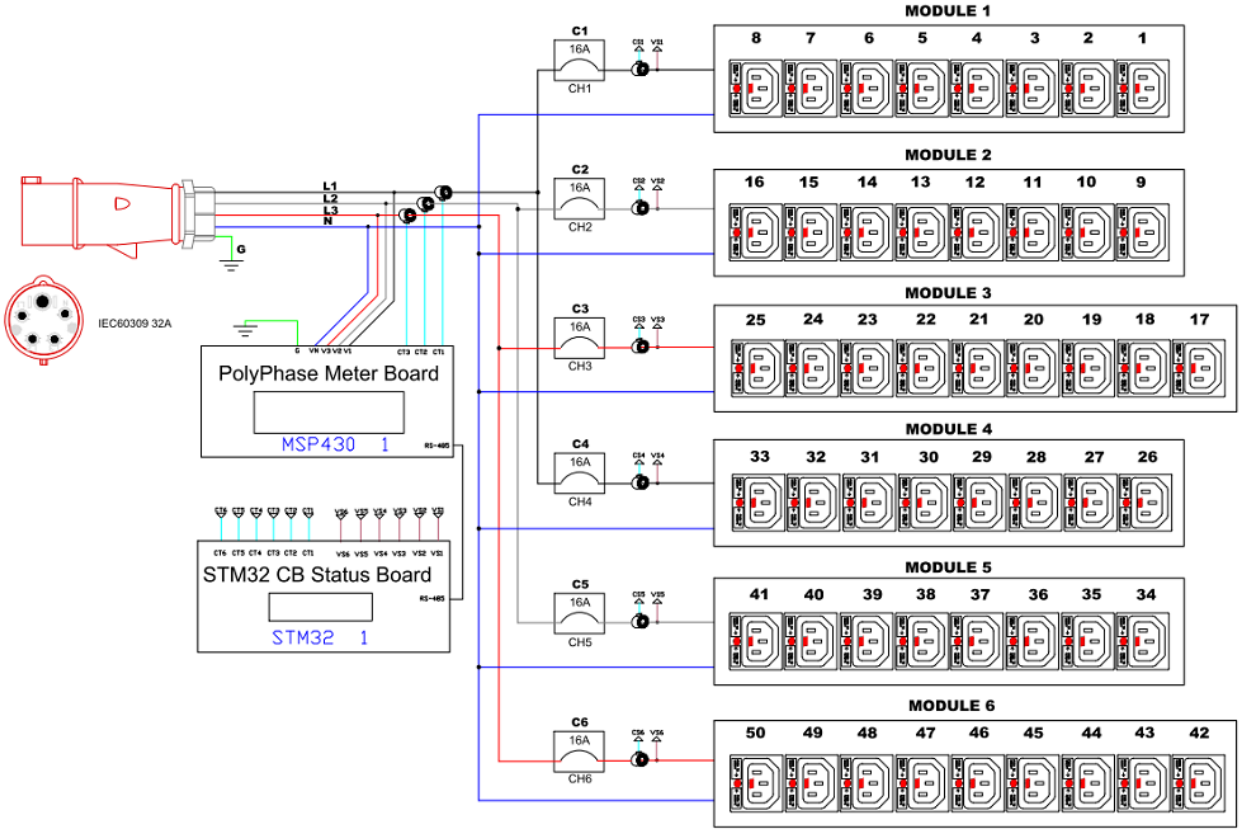

Technical Specifications / Engineering Submittals

Raritan Model Number: PX3-1135U-E2N1Q1V2

rev20170831

MECHANICAL DIAGRAM

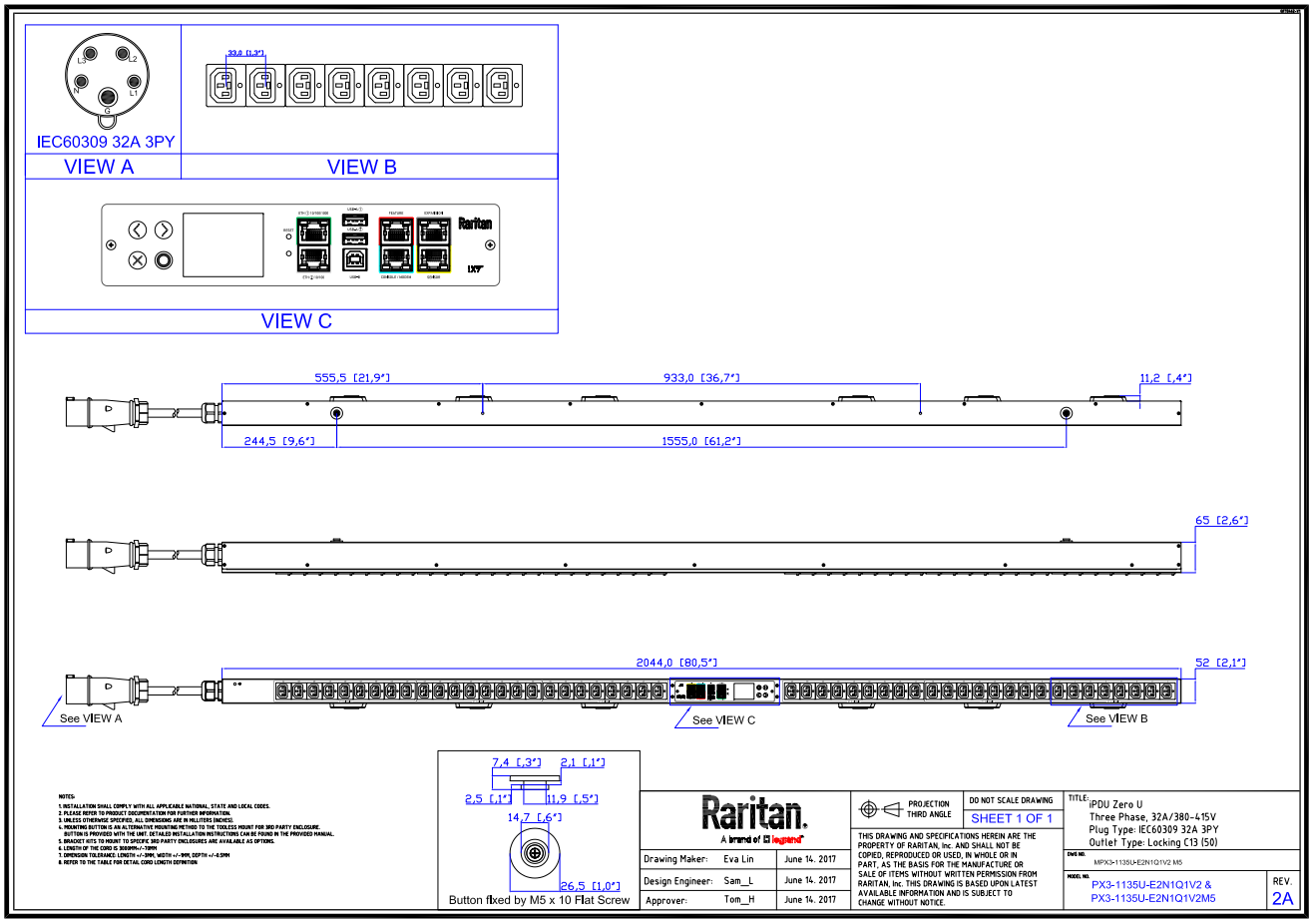

Technical Specifications / Engineering Submittals

Raritan Model Number: PX3-1135U-E2N1Q1V2

rev20170831

TRIP CURVE

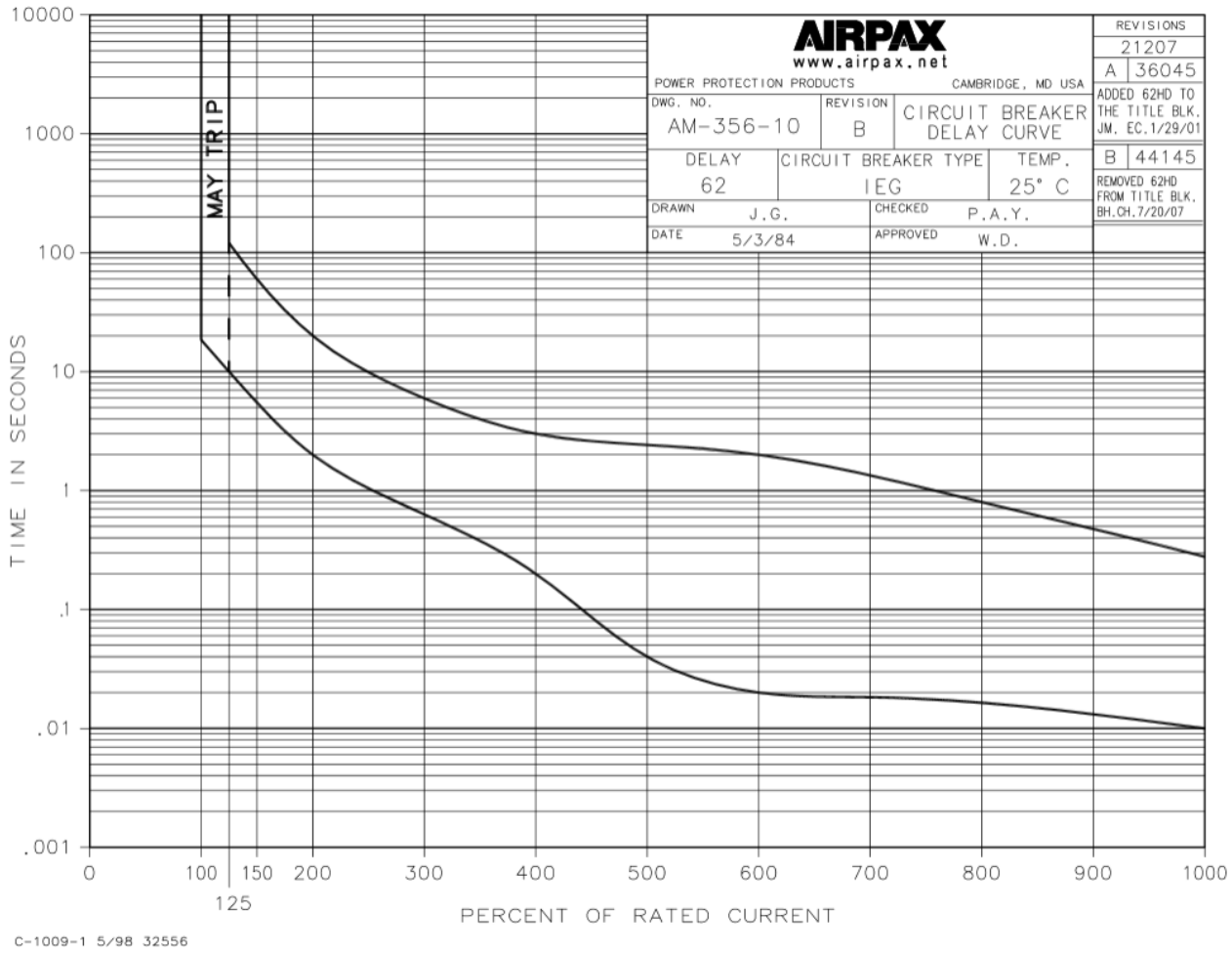

This file generated on: Thu, August 31, 2017 - 21:05:08