SEAMLESS Connect
Universal dvLED Cart/Trolley
LEDMTL Series

See configuration drawing	See configuration drawing

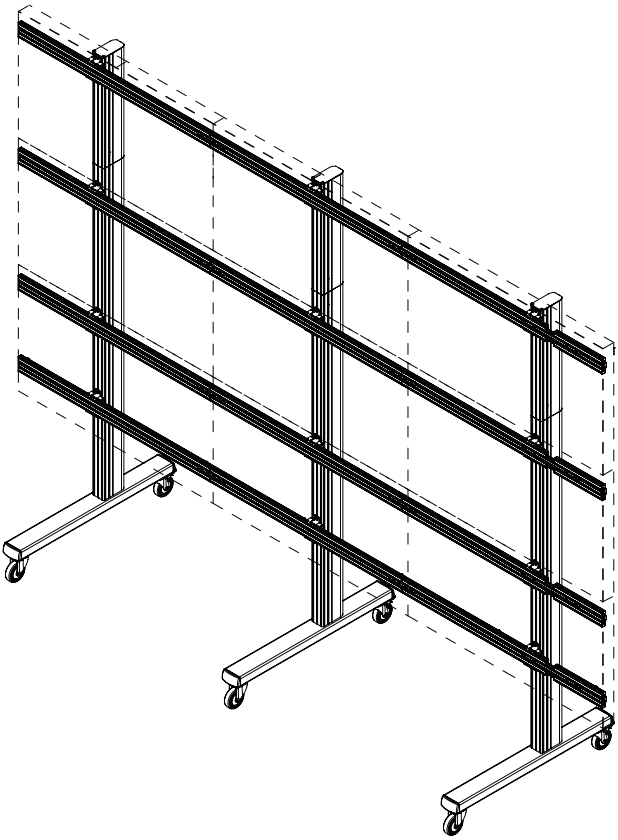

ENG

⚠ WARNING

ENG - Do not begin to install product until you have read and understood the instructions and warnings contained in this user guide. Always use an assistant or mechanical lifting equipment to safely lift and position equipment. This product must be installed onto flat, hard, level surface to prevent tipping. Use with heavier displays may result in instability causing tip over resulting in death or serious injury. The cart or stand is not affixed or secured to the floor, and may therefore tip over and/or fall if screen and/or stand is shaken or hit. Displays must be removed before moving cart. Not recommended for use in areas with heavy traffic. This product is intended for indoor use only. Use of this product outdoors could lead to product failure or personal injury. Screws must be tightly secured. Do not overtighten screws or damage can occur and product may fail. Never exceed the Maximum Load Capacity. Be careful not to pinch fingers when operating the mount. Death or serious injury may occur when children climb on audio and/or video equipment furniture. A remote control or toys placed on the furnishing may encourage a child to climb on the furnishing and as a result the furnishing may tip over on to the child. Relocating audio and/or video equipment to furniture not specifically designed to support audio and/or video equipment may result in death or serious injury due to the furnishing collapsing or over turning onto a child. For support please call customer care at 1-800-865-2112.

ENG Symbols

ENG **WARNING**

ENG Screws must get at least three full turns and fit snug.

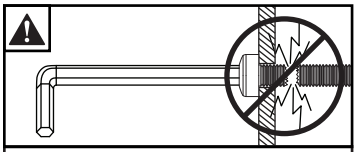

ENG Do not overtighten screws.

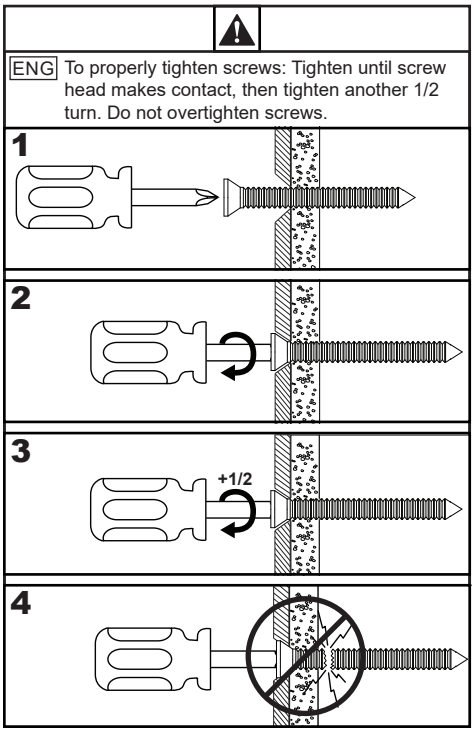

Tools Needed for Assembly.

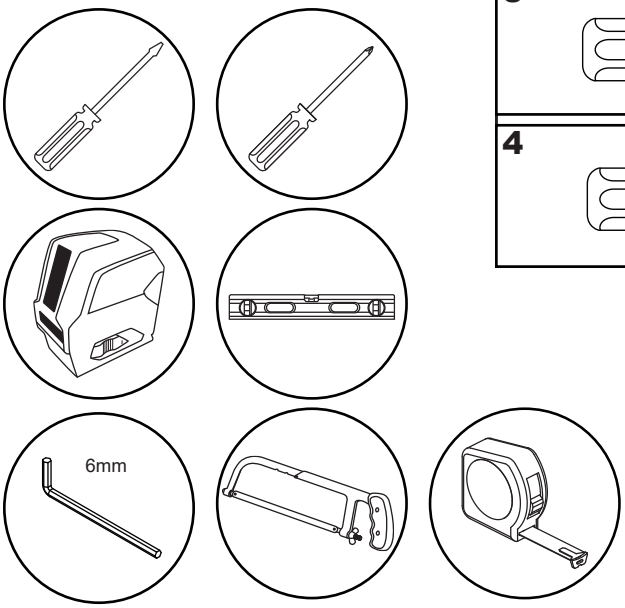

Parts (Before beginning, make sure you have all parts shown below). *Refer to parts list included with your model.

Parts List

	Description	Qty*
A	base leg	*
B	caster non-locking	
C	caster locking	
D	attachment bracket	
E	-	
F	1/4" washer	
G	upright, long	
H	upright, short	
I	latch assembly	
J	extrusion end cap	
K	-	
L	M8 tooth washer	
M	horizontal extrusion 1200mm	
N	nut bar, four screw	
O	barbed fastener	
P	upright cover	
Q	-	
R	-	
S	horizontal extrusion expandable	
T	drop-in nut bar	
U	base leg bolt	
V	5mm allen wrench	
W	M5 cup washer	
X	M6/M8 cup washer	
Y	M5 flat head screw	
Z	M6 flat head screw	
AA	M8 flat head screw	
BB	M10 flat head screw	
CC	stand-off bracket	
DD	-	
EE	-	
FF	-	
GG	M6 x 10mm socket screw	
HH	M6 boss washer	
II	M8 boss washer	
JJ	M10 boss washer	

A
base leg

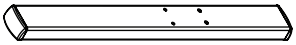

G
upright, long

B
caster non-locking

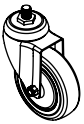

H
upright, short

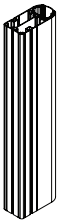

C
caster locking

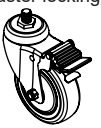

D
attachment bracket

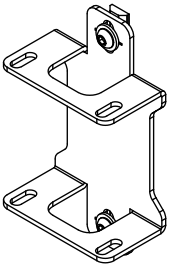

I
latch assembly

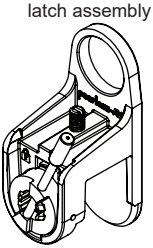

N
nut bar, four screw

L
M8 tooth washer

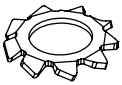

F
1/4" washer

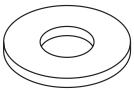

M
horizontal extrusion 1200mm

S
horizontal extrusion expandable

J
extrusion end cap

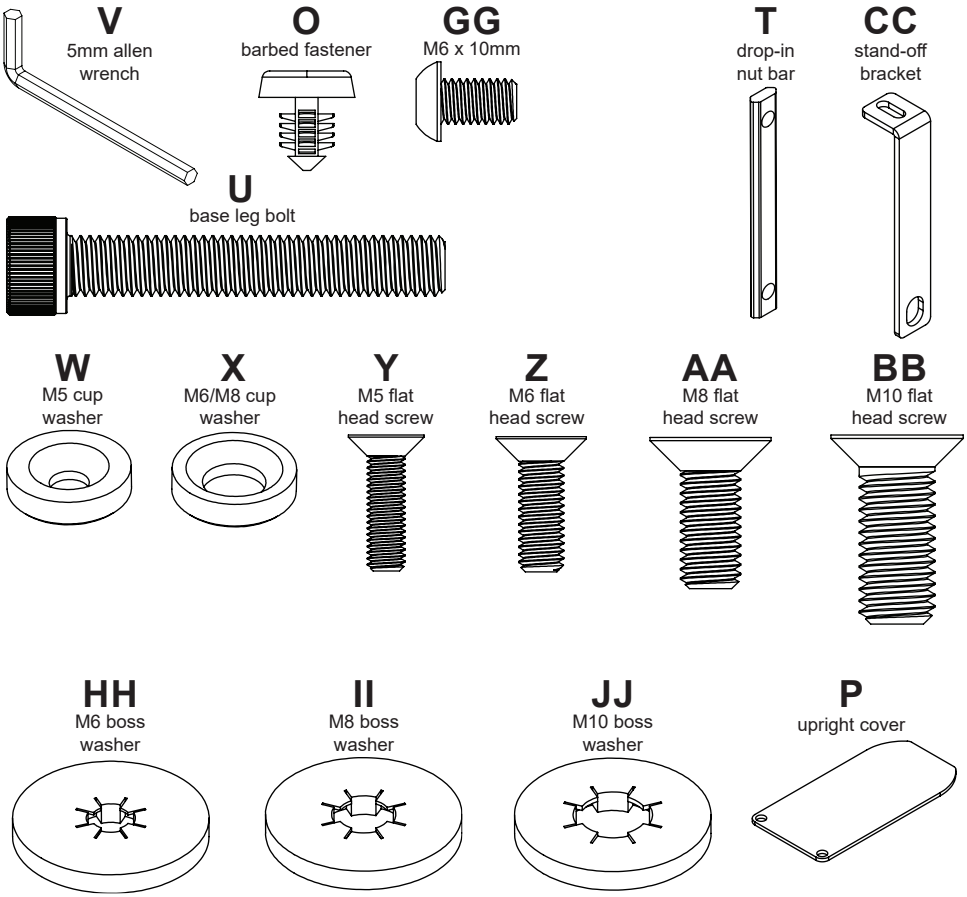

Parts List

	Description	Qty.
AAA	spacer	2
BBB	3mm allen wrench	1
CCC	laser target	2
DDD	4mm allen wrench	1
EEE	spacer extension	2
FFF	shim plate	2
GGG	M4 flat head screw	12

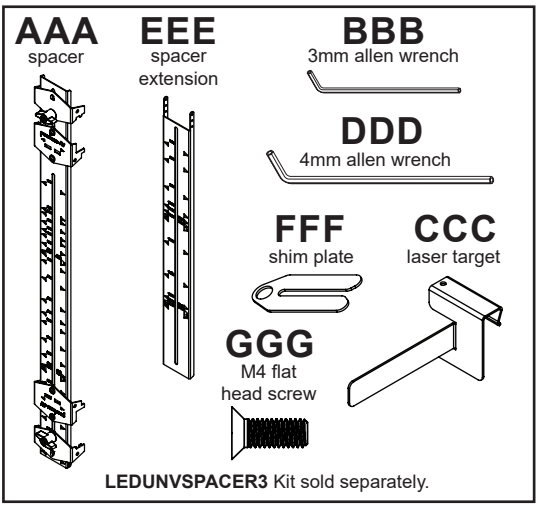

LEDUNVSPACER3 Kit sold separately.

1

Scan QR Code provided to obtain dvLED configurator drawing specific to your model.

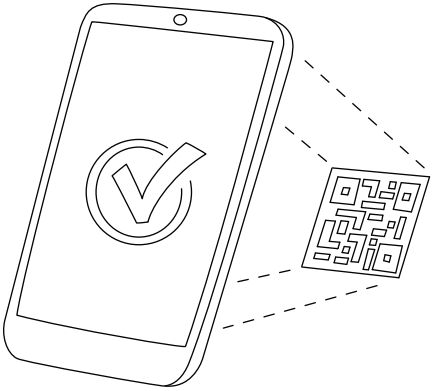

USA

UK

2-1

Join vertical uprights using nut bars provided. Arrange so that longest upright is at the bottom.

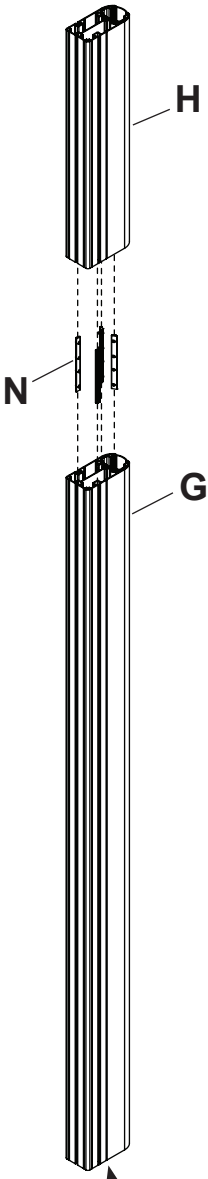

TOP VIEW

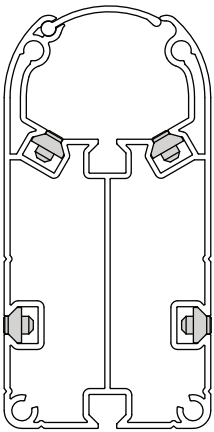

SIDE VIEW

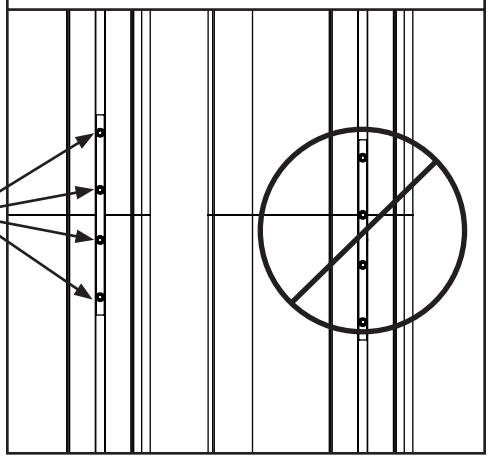

Ensure threaded holes are at bottom of the bottom upright.

2-2

Slide brackets onto vertical upright. Refer to configuration drawing specific to your model. Hand tighten hardware.

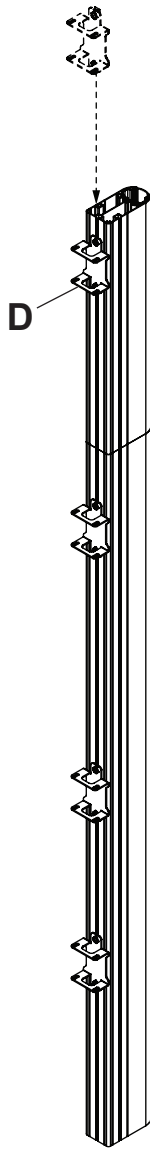

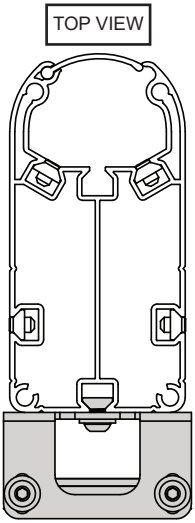

3-1

Viewing from the front, arrange extrusions as shown when building assembly.
Expandable extrusion shall be installed on the far right side, note orientation.

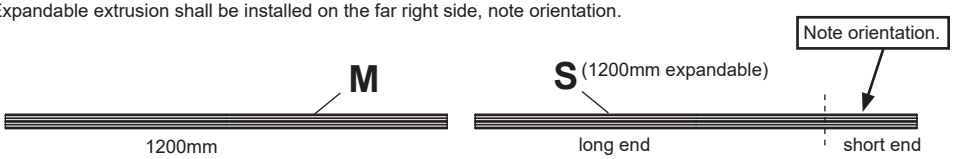

3-2

For displays narrower than 1200mm, determine the required extrusion length with the following extrusion cut to length formula:

Video Wall Width - 0.25" (6mm) = Extrusion Length

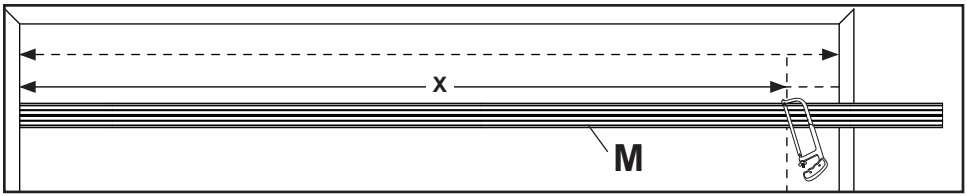

3-3

Connect two horizontal extrusions using connector plate.

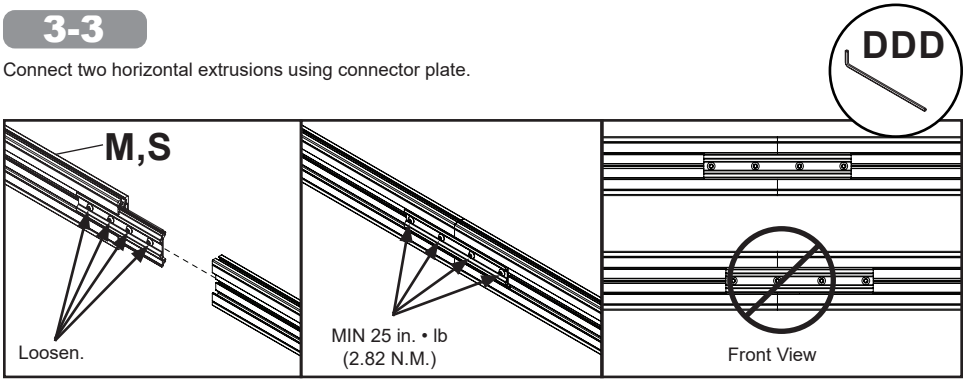

3-4

Extend the connection joint of expandable extrusion as needed.

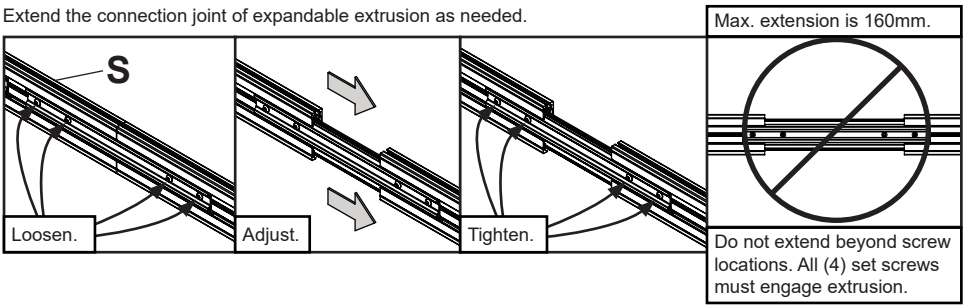

4

With uprights laying down, space them so that there is one upright at the middle of each display column.
Spacing between two uprights shall not exceed 48" (1220mm).
Refer to configuration drawing specific to your model for additional information.

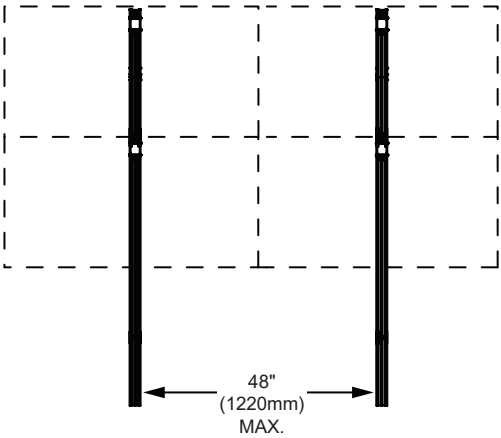

5-1

Drop nut bars into top and bottom channels of horizontal extrusions.

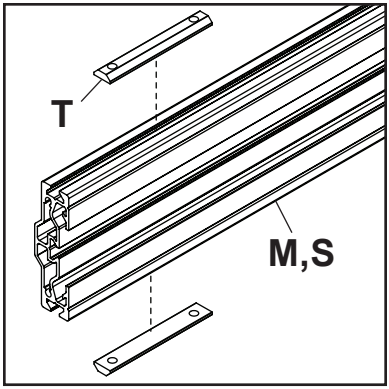

5-2

With uprights still laying down, position horizontal extrusions into the openings of the attachment brackets. Align nut bars inside the top and bottom channels of horizontal extrusion with holes of attachment brackets. Secure using hardware provided.

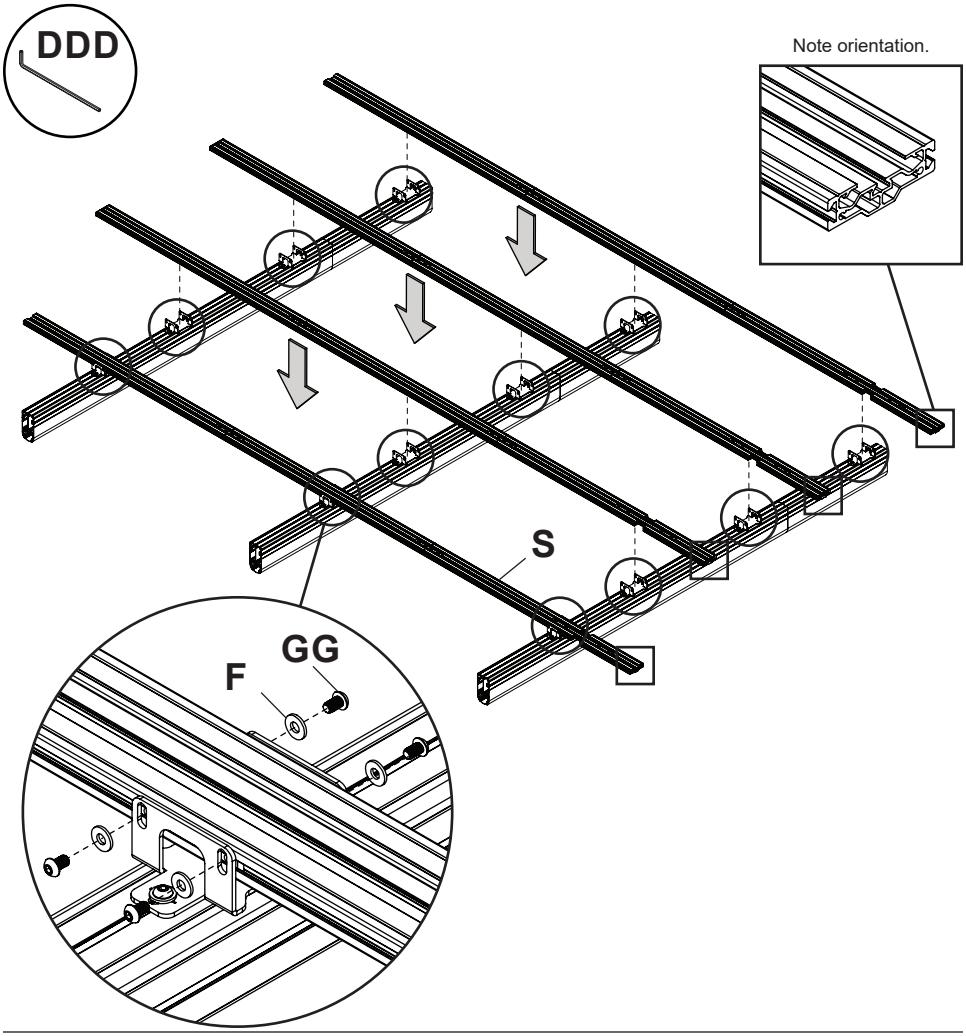

6-1

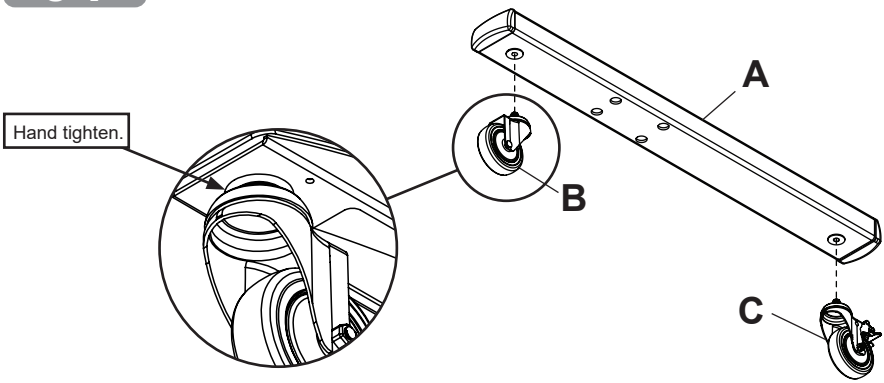

6-2

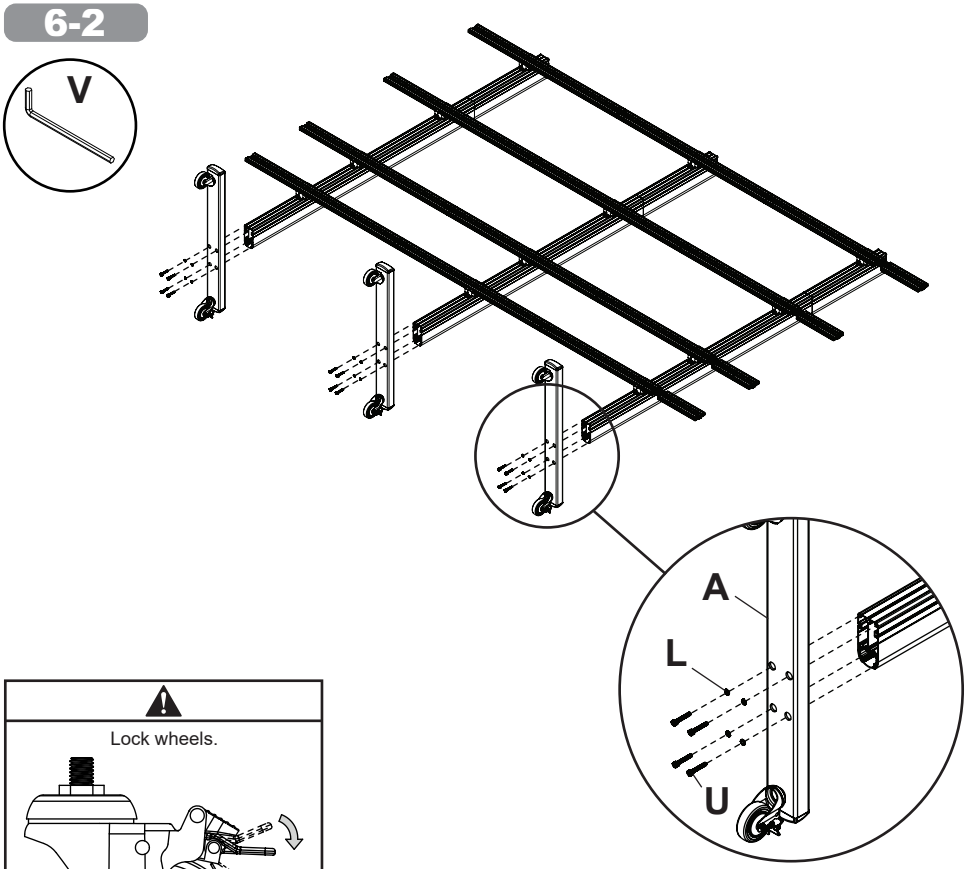

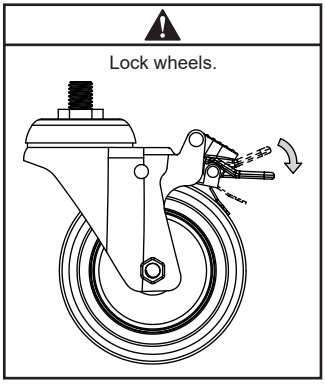

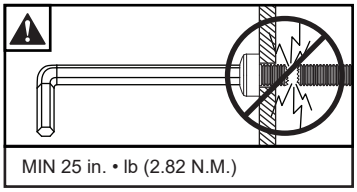

7-1

Determine the height of the displays being mounted and locate the same dimension on the front of the spacer. If that height is above 686mm, attach spacer extension. If that height is not listed on the spacer, use measurement of height of display to set custom spacing.

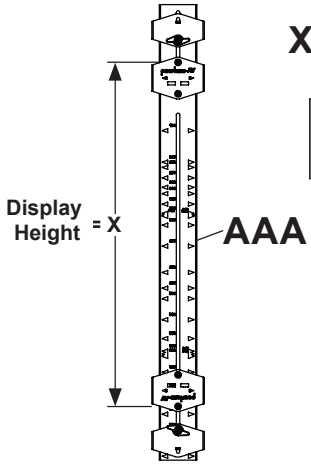

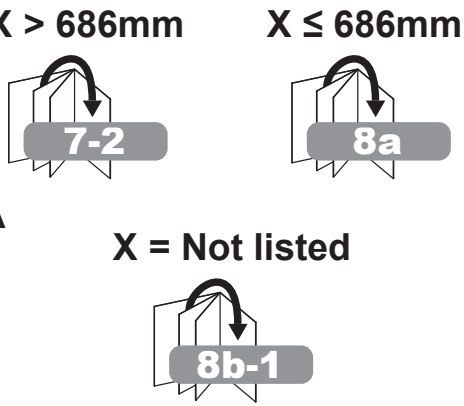

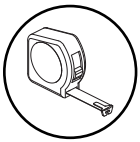

7-2

Add the extension when "X" measurement (step 7-1) is taller than 686mm. Detach lower fixed jaw and clamp bracket from main spacer assembly then reattach to the extension.

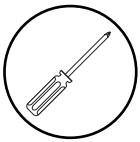

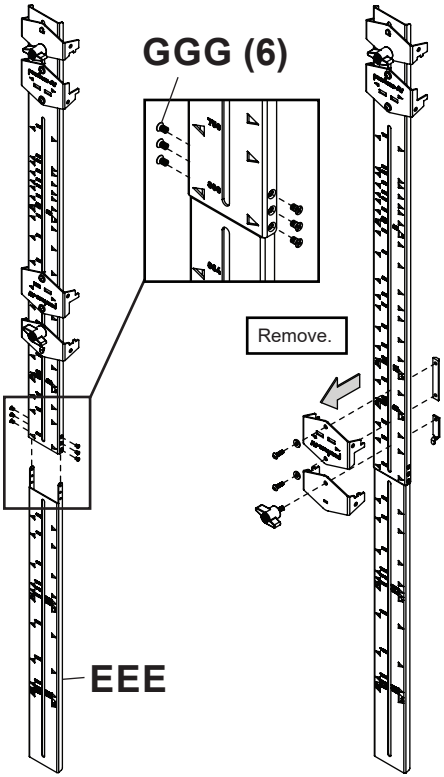

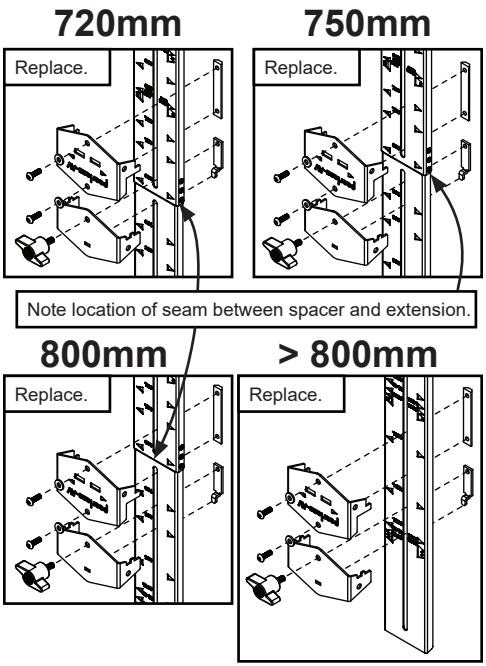

8a

Move spacer bracket and clamp to align window of spacer bracket with corresponding height value (measurement "X", step 7-1).

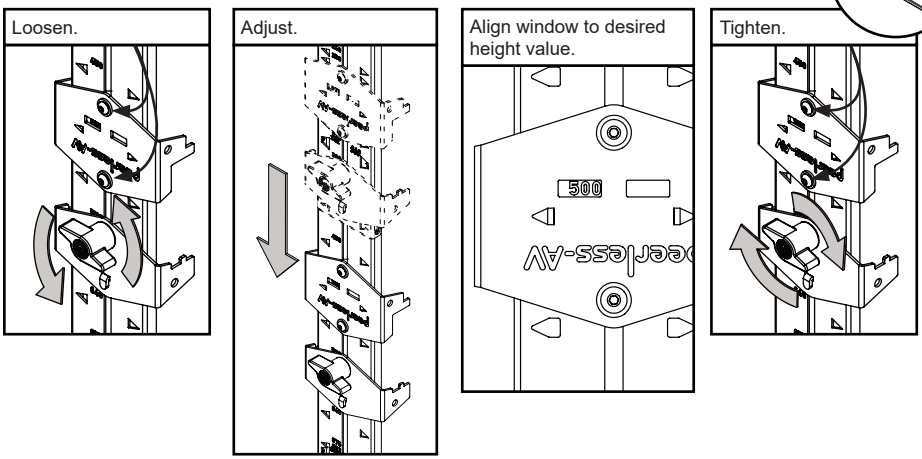

8b-1

If the display height is not listed on the spacer, measure the display to set custom spacing. Remove top spacer clamp. Move upper spacer bracket to the zero position. Loosen lower spacer bracket to insert shim plate underneath to allow spacer bracket to slide freely.

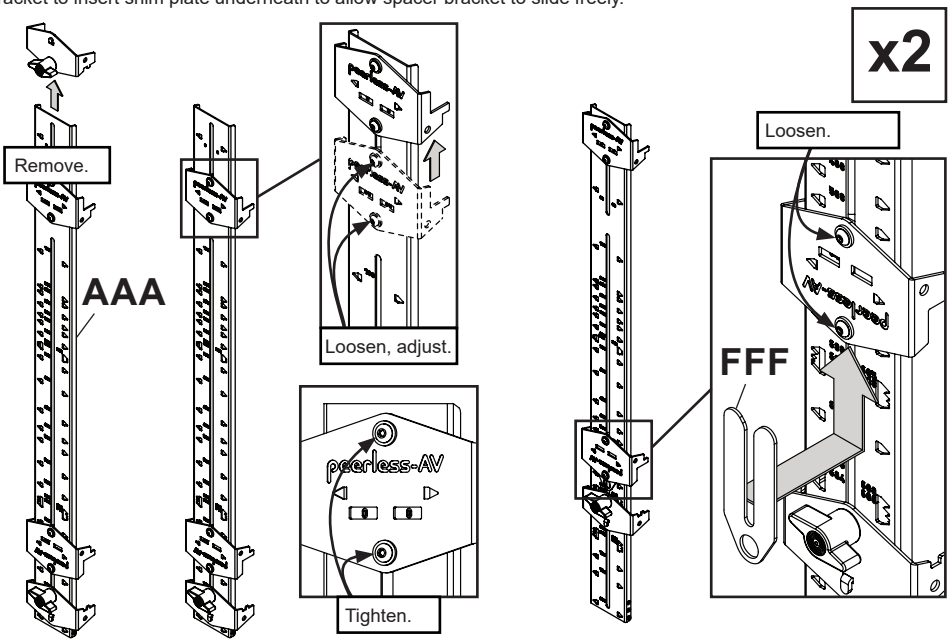

8b-2

With spacer brackets positioned wide enough to fit display inside, position notch of top spacer bracket flush with top edge of display. Slide the bottom spacer bracket to the bottom edge of display. Tighten screws of bottom spacer bracket.

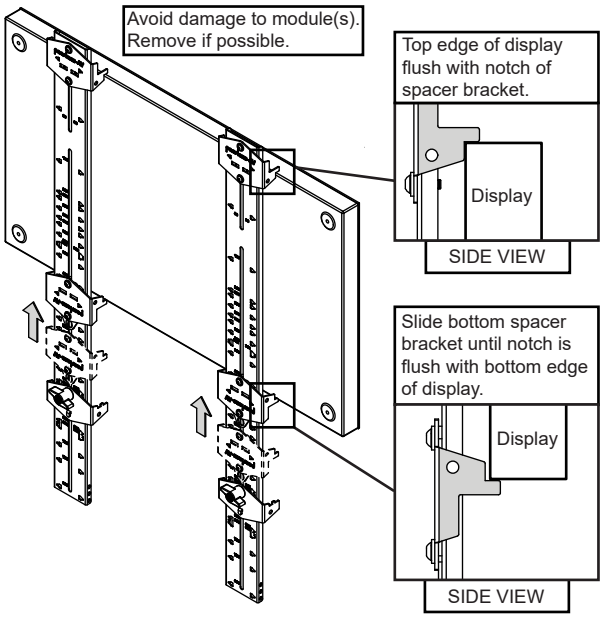

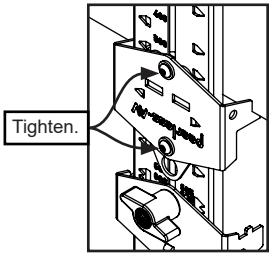

8b-3

Remove display. Return top spacer bracket to the 80mm position.
Replace top clamp onto assembly.

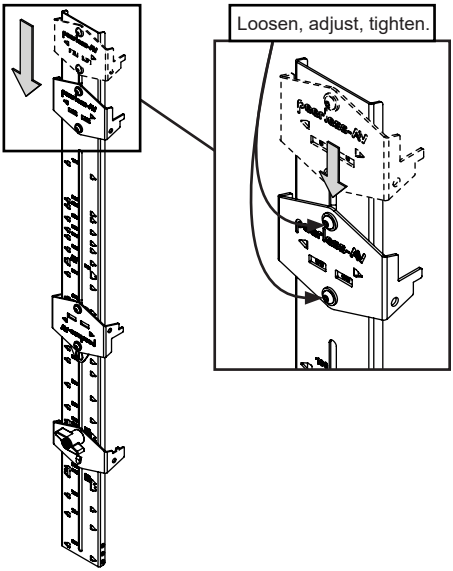

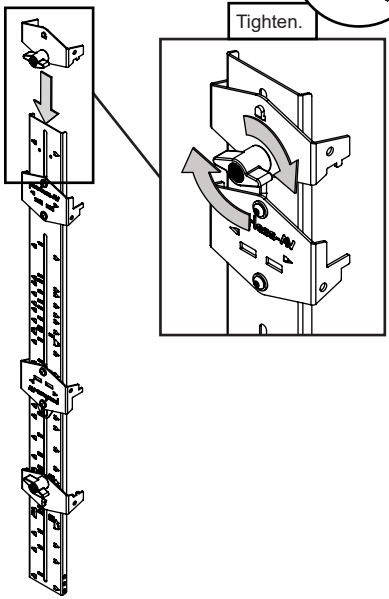

9-1

Stand cart upright. Refer to drawing specific to your model for measurements to locate top horizontal extrusion's height. The top of attachment bracket shall be flush with top of vertical upright. If a lower A.F.F. (Above Finished Floor) height is desired, adjust the height of the top horizontal extrusion as needed.

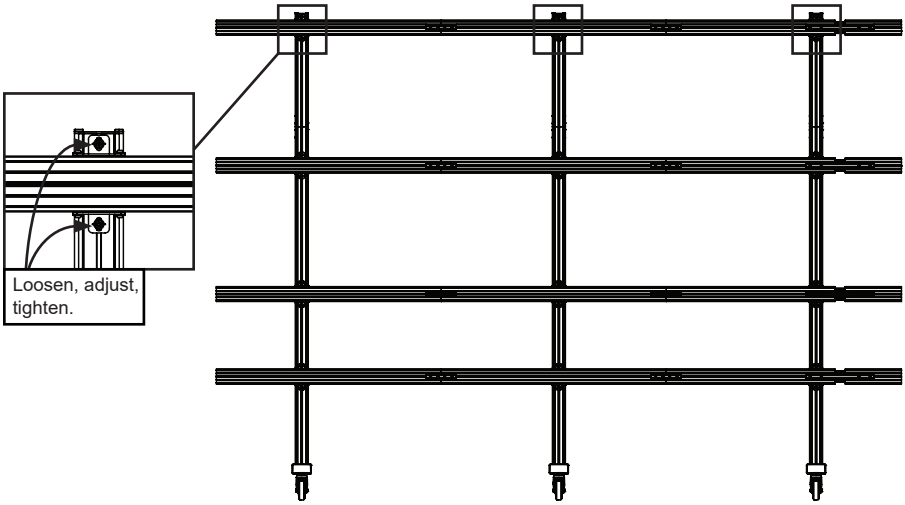

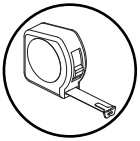

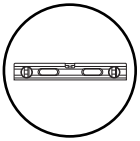

9-2

Adjust height of remaining extrusions using the spacers. Clamp the lower spacer jaw assembly to an unadjusted extrusion assembly. Clamp the upper spacer jaw assembly to extrusion previously installed. Vertically align extrusions with a laser. Tighten hardware.

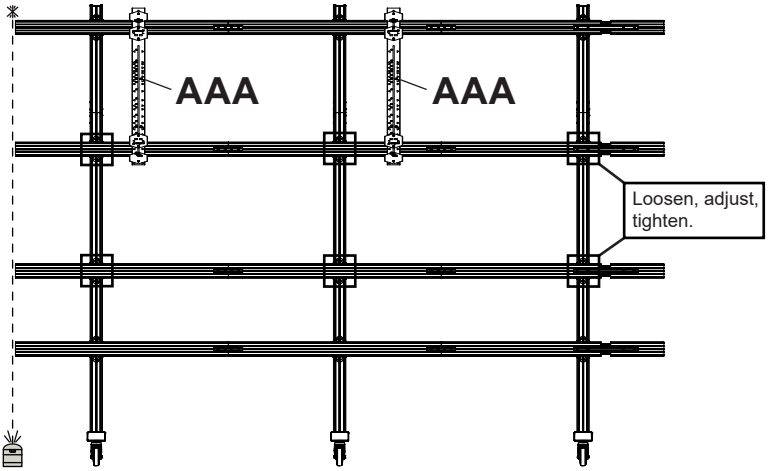

9-3

Refer to configuration drawing specific to your model to locate height of bottom extrusion.
Y = Bottom of horizontal extrusion second from the bottom to the top of horizontal extrusion on the bottom.

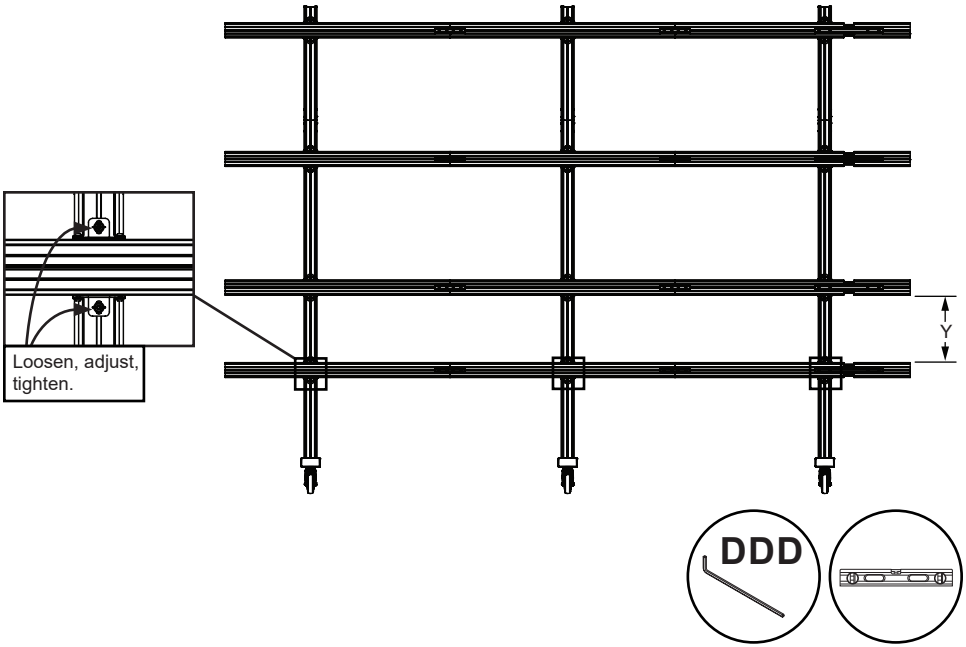

10

Optional: If uprights would be visible above the video wall, uprights may be cut as needed.

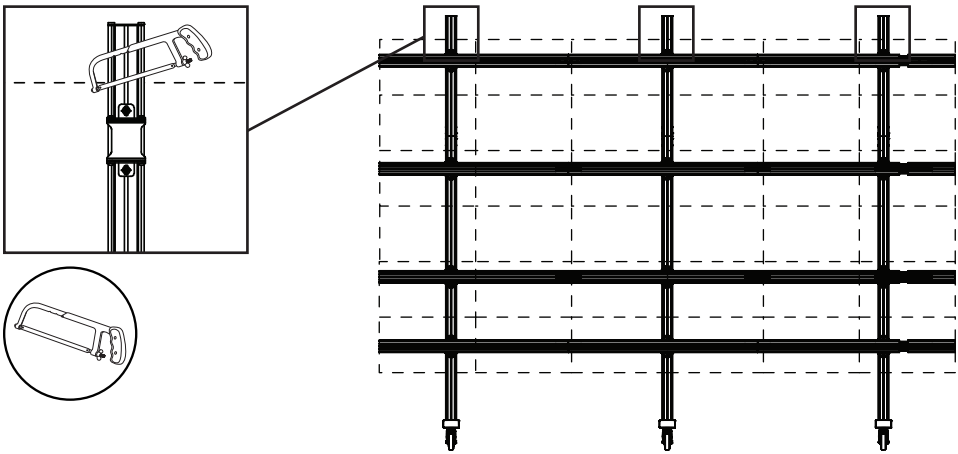

11

Set the laser level so that it is parallel to the cart. With the horizontal extrusion set all the way back, measure from face of extrusion to laser, in various locations. Mount laser target at the attachment bracket location that is near the mount's high point, determined by the shortest distance from the extrusion to the laser. Adjust extrusion out slightly, tighten adjustment screws and mark laser line on the target. Move the target to a location near the next attachment bracket, adjusting depth until laser is on the line, tightening the screws as you go. Continue until all attachment brackets are adjusted.

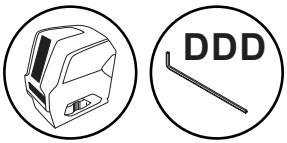

Double check using a straight edge to span three extrusions. Adjust low and high spots as needed.

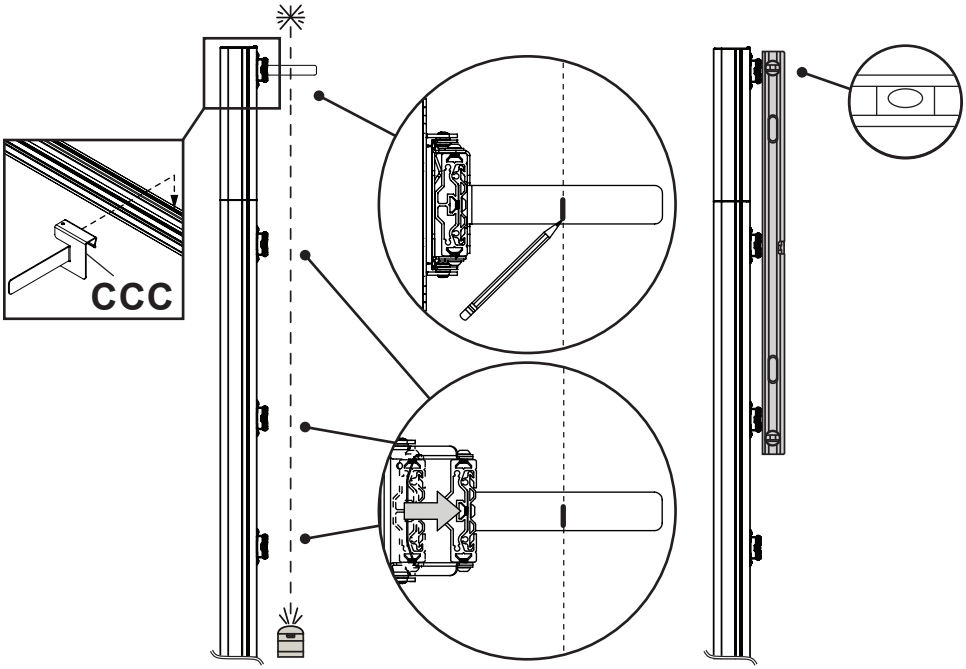

12

Install column covers and extrusion end caps.

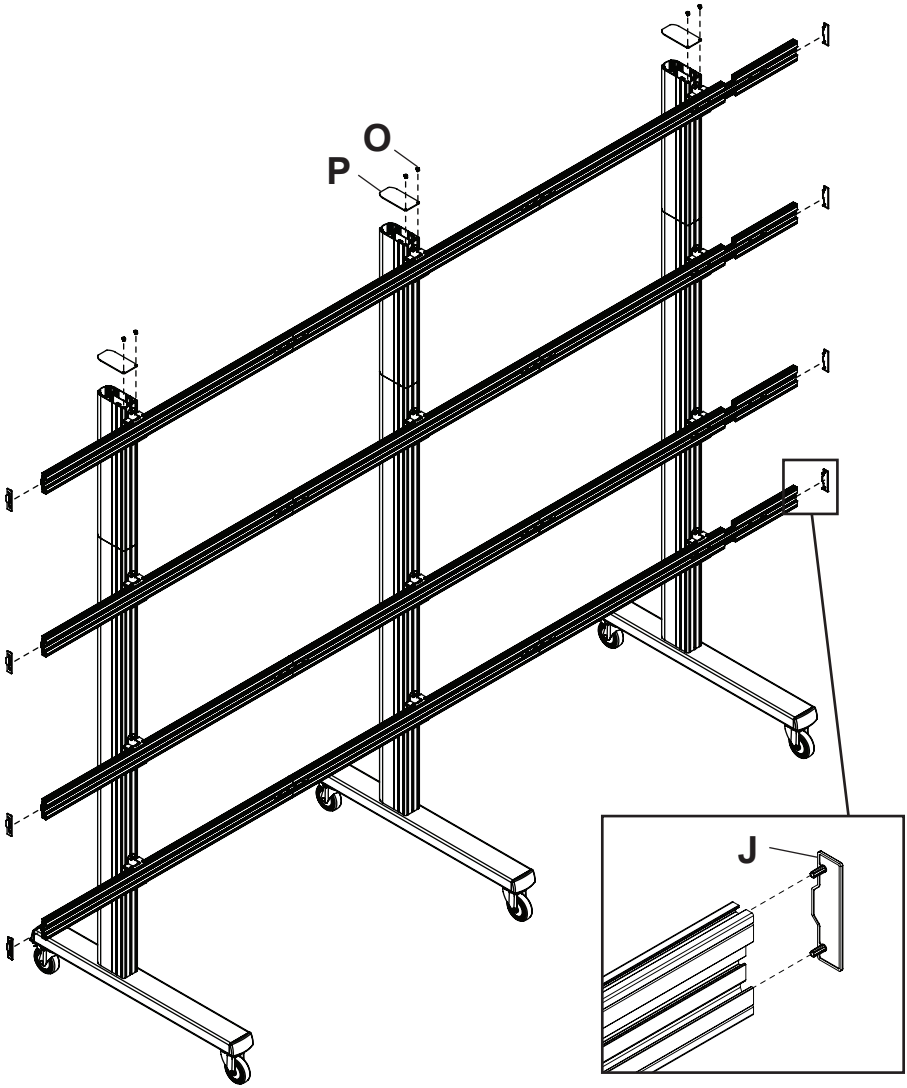

13

If mounting hardware is preinstalled, remove and replace with hardware provided.

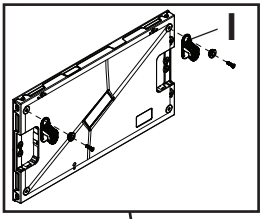

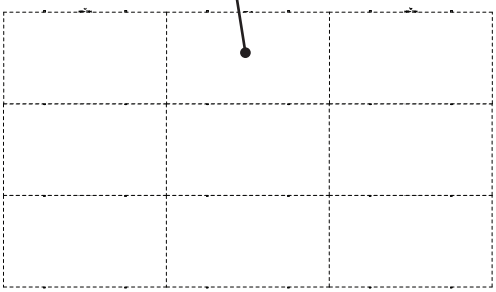

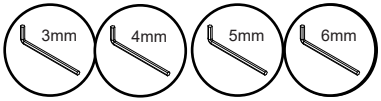

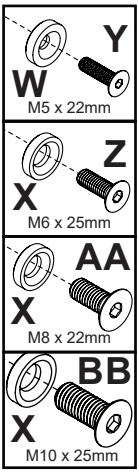

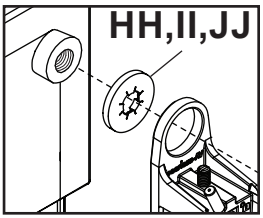

If display has raised mounting points, use boss washers as shown.

14-1

Install stand-off brackets to the bottom extrusion using drop-in nut bars as shown.

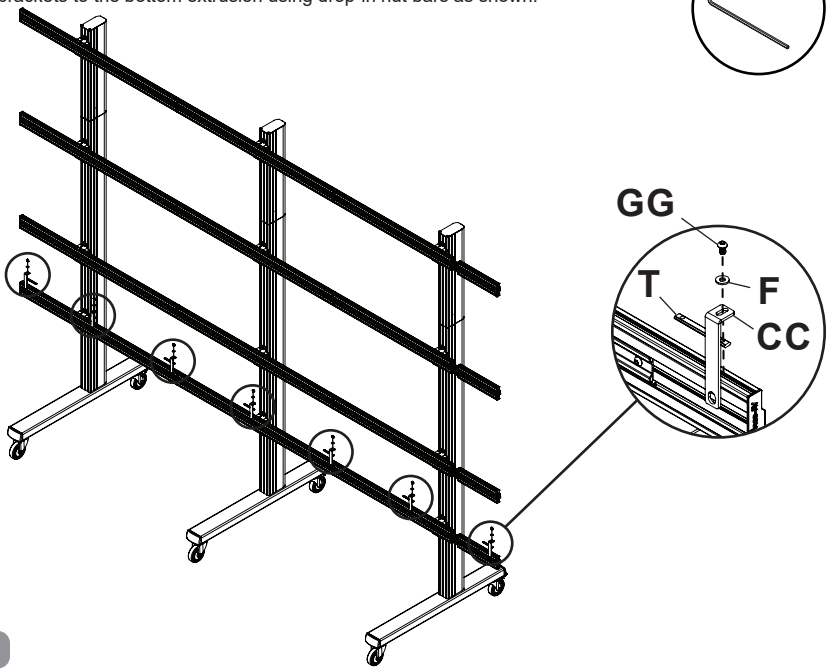

14-2

Hook display cabinets onto horizontal extrusion, adjust height to level and join cabinets together using display's connecting system. Adjust plumb with depth adjustment bracket, close latch, then run cables one at a time starting from left to right.

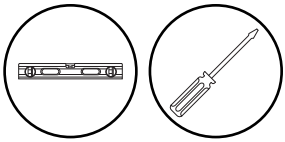

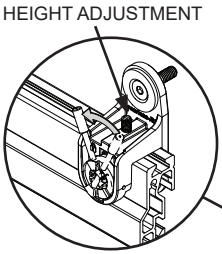

TURN LATCH LEVER TO SECURE

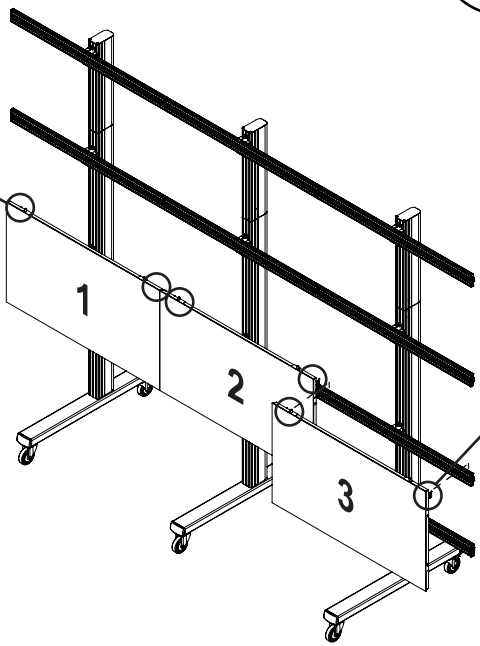

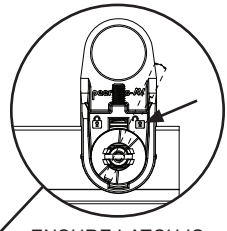

ENSURE LATCH IS UNLOCKED PRIOR TO INSTALLATION.

14-3

One stand-off bracket shall be located at every seam between two displays.
Secure stand-off brackets to the bottom mounting holes of the bottom row of displays.

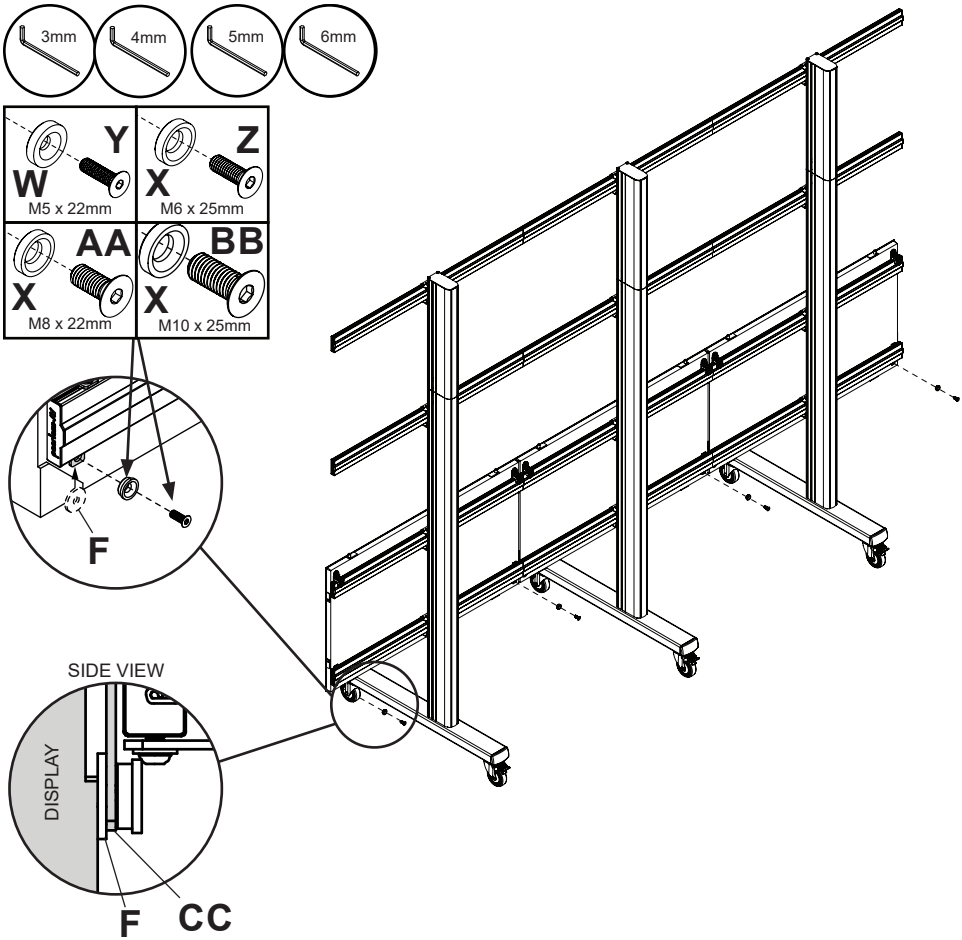

15

Hook display cabinets onto horizontal extrusion, adjust height to level and join cabinets together using display's connecting system. Close latch, then run cables one at a time starting from left to right.

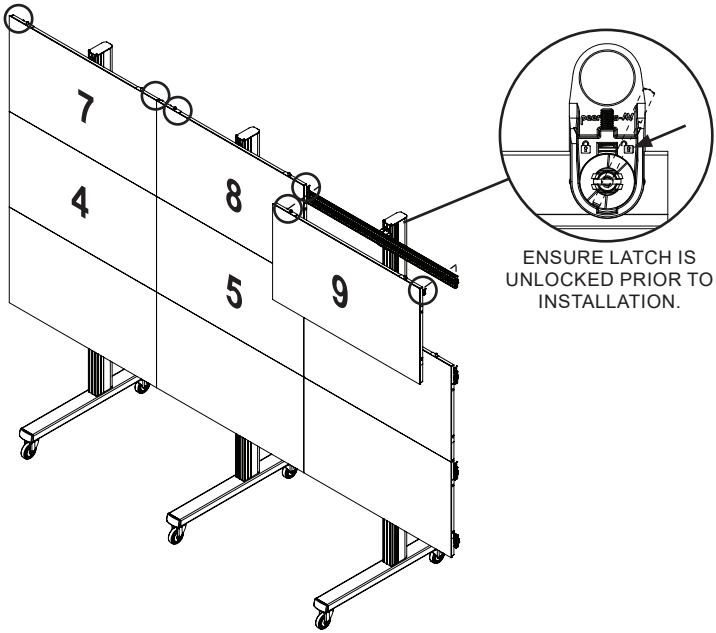

16

To remove, start from the top right.
Open latch assemblies, disconnect cables, separate cabinets and remove displays one at a time.

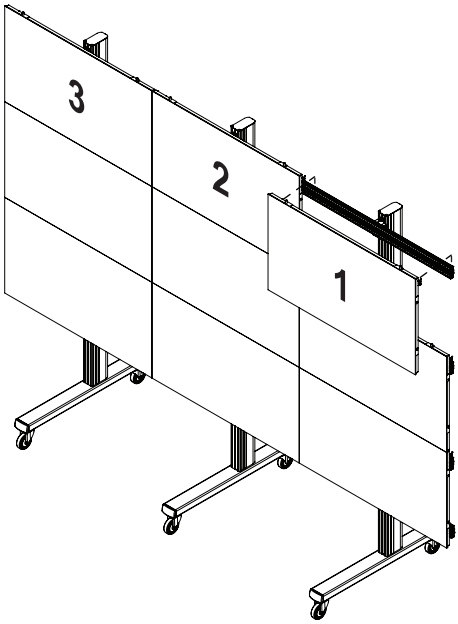

This page intentionally left blank.

ENG	Warranty	ESP	Garantía	FRN	Garantie	DEU	Garantie	NEL	Garantie
ITL	Garanzia	ČEŠ	Záruka	SLK	Záruka	POR	Garantia	TÜR	Garanti

www.peerless-av.com/warranty • www.peerless-av.com • www.peerless-av.com/patents

Peerless-AV
2300 White Oak Circle
Aurora, IL 60502, USA
info@peerless-av.com

(800) 865-2112
(630) 375-5100

Peerless-AV EMEA
Unit 2, Curo Park
Frogmore, St. Albans,
Hertfordshire, AL2 2DD
United Kingdom

+44 (0) 1923 200 100

Peerless-AV B.V.
Papendorpseweg 75
3528 BJ Utrecht
The Netherlands

+31 (0) 70 770 8037

Peerless-AV Latin America
Av. de las Industrias 413
Parque Industrial Escobedo
General Escobedo N.L.,
México 66062

+52 (81) 8384-8300

© 2025 Peerless Industries, Inc. Peerless-AV® is a registered trademark of Peerless Industries, Inc. All rights reserved.
Other parties' marks are the property of their respective owners.