BANKERS BOX®

12776

1

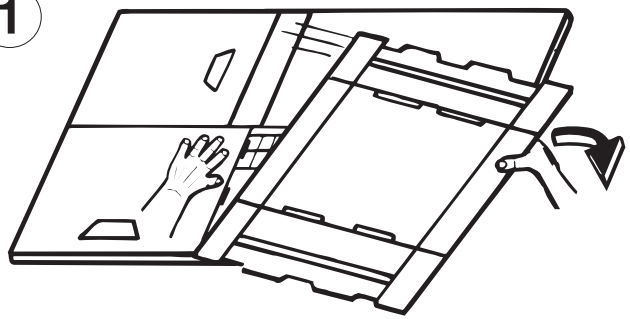

2

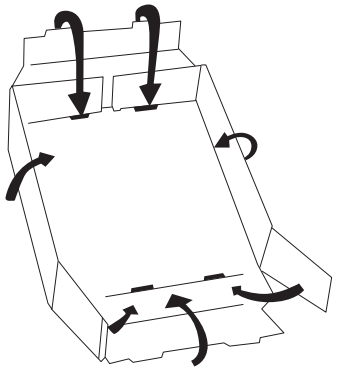

3

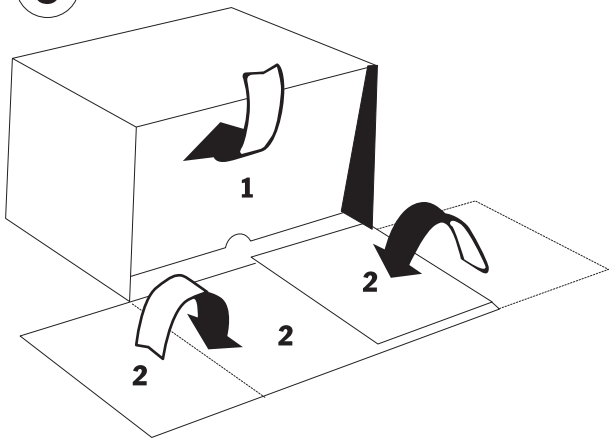

4

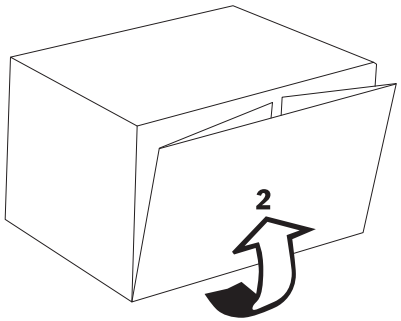

5

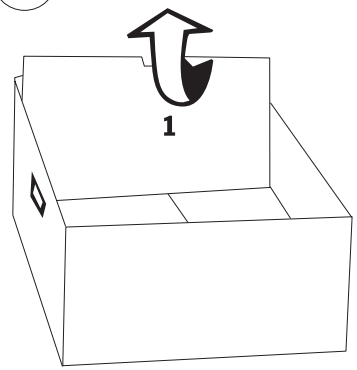

6

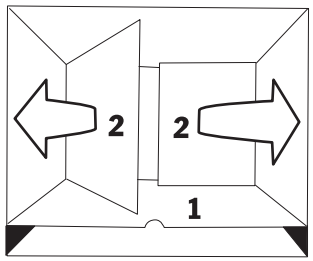

7

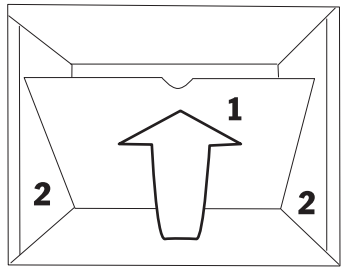

Fellowes. 1789 Norwood Avenue, Itasca, Illinois 60143-1095 • USA• 630-893-1600

©2010 Fellowes, Inc. BANKERS BOX® is a registered trademark of Fellowes,Inc.