Power Configurator

Lenovo ThinkStation P3 Tower

Table of Contents

Overview 2
Section 1 – Key Architectural Design 3
Section 2 – Power Ratings for Key System Components 6
Section 3 – P3 Tower Power Configurations 8
Section 4 – Appendix 11
Revision History 13

Overview

The ThinkStation P3 Tower platform is the latest entry level ThinkStation. The following power supply (PSU) options that are available for P3 Tower:

P3 Tower PSU options: 500W / 750W / 1100W

These power supplies allow the P3 platform to support an expanded configuration of system components, notably the Intel Raptor Lake CPU family and GPUs.

The goal of this document is to highlight the specifications of the system components with the highest power demand and allow users to make the best decisions when choosing the correct PSU for their hardware configuration.

Section 1 – Key Architectural Design

The P3 utilizes a standard approach to powering system components. All onboard components are powered through system board power delivery and some add-in cards can require additional cable connections from the power supply. The diagrams in *Figure 1* show a high-level design of how the power supply directly connects to the system board and add-in cards.

Note: in configurations without aux-powered GPUs, the unused aux power cable is bundled up and the 6+2 (12VHPWR for 1100W) pin connector is clipped behind the front panel.

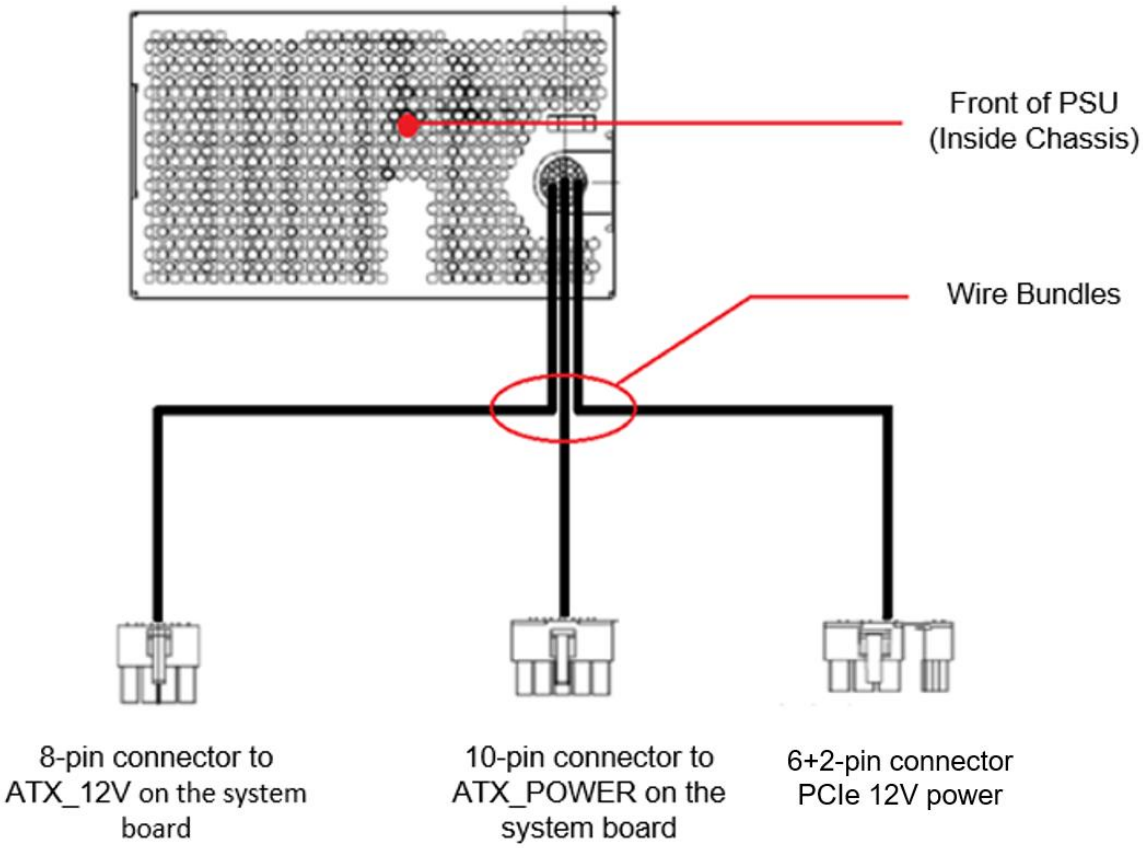

Figure 1 – P3 Power Design 500W, 750W

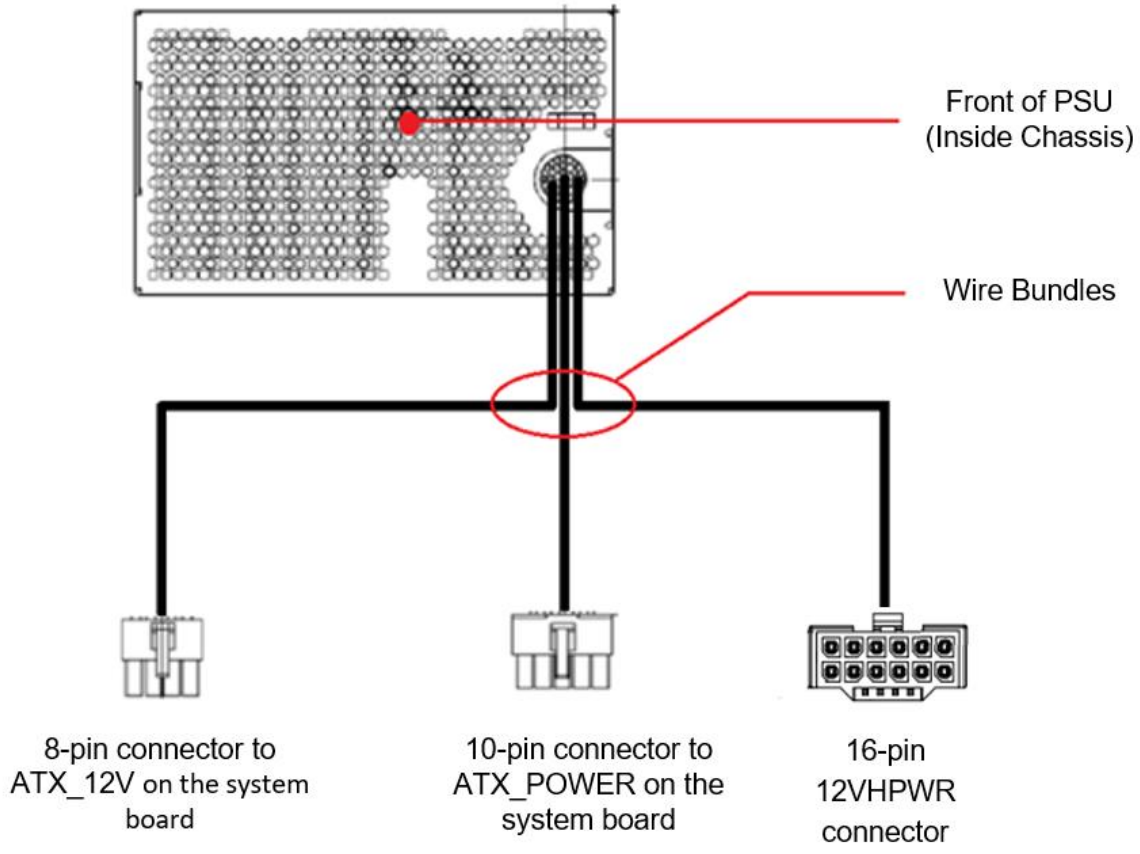

Figure 2 – P3 Power Design 1100W

Note: In configurations with the 1100W PSU, the GPU card power plug is a 12VHPWR connector instead of the traditional PCIe 6+2 pin connectors.

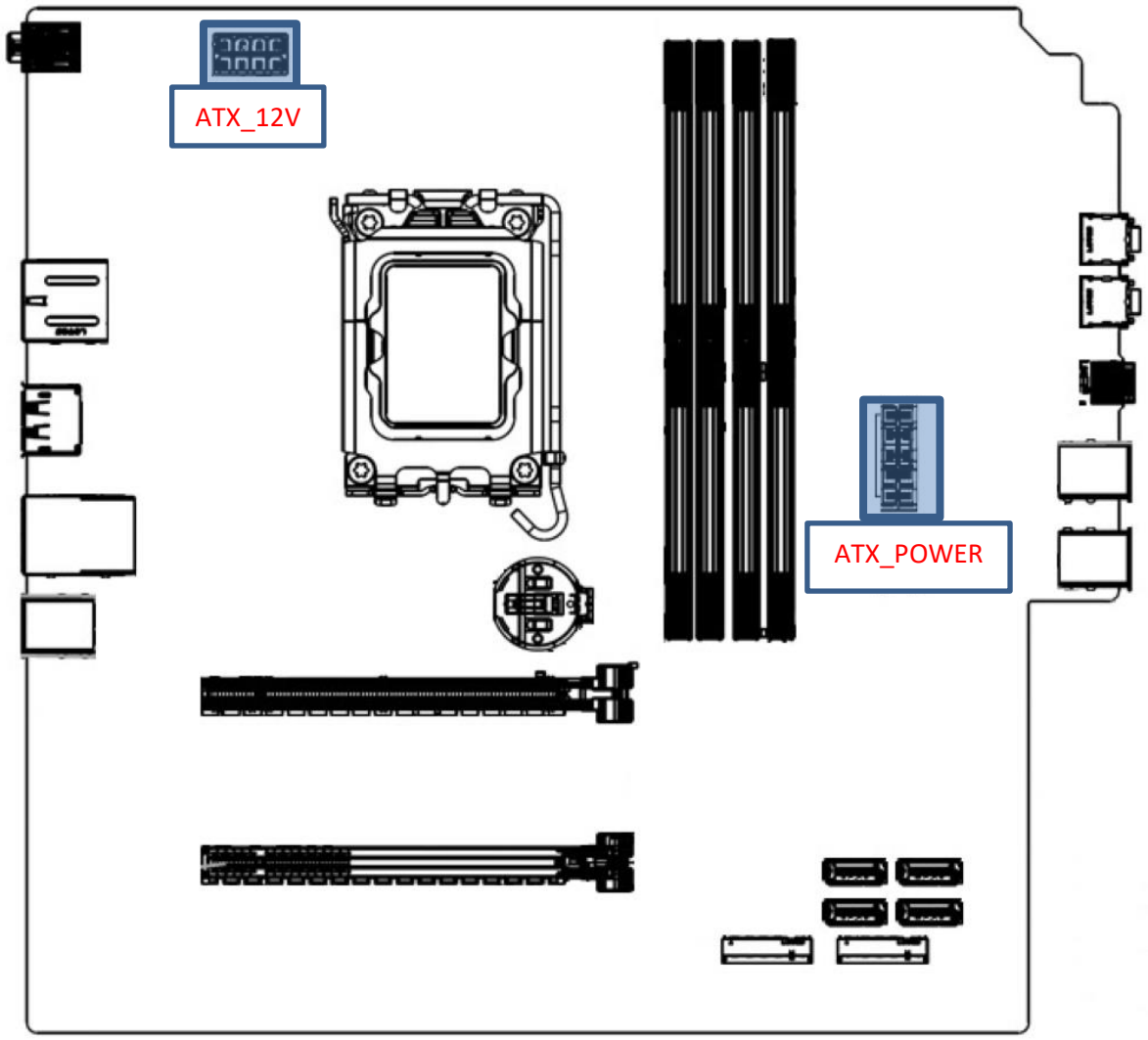

Figure 3 - P3 Motherboard

Section 2 – Power Ratings for Key System Components

To fully understand the power capabilities of the ThinkStation P3 Tower, it is important to know the power ratings of the individual system components.

Table 1 shows the power ratings for the various CPUs supported on P3 Tower.

Table 1 - CPU Power Ratings

CPU Name (Core Raptor Lake)	CPU Power	Additional CPU Information
Core i9-13900K	125W	3.0 GHz, 24 cores, DDR5-5600
Core i7-13700K	125W	3.4 GHz, 16 cores, DDR5-5600
Core i5-13600K	125W	3.5 GHz, 14 cores, DDR5-5600
Core i9-13900	65W	2.0 GHz, 24 cores, DDR5-5600
Core i7-13700	65W	2.1 GHz, 16 cores, DDR5-5600
Core i5-13600	65W	2.7 GHz, 14 cores, DDR5-5600
Core i5-13500	65W	2.5 GHz, 14 cores, DDR5-5600
Core i5-13400	65W	2.5 GHz, 10 cores, DDR5-5600
Core i3-13100	60W	3.4 GHz, 4 cores, DDR5-4800

Note: All CPUs supported on P3 Tower have integrated GPU.

Table 2 lists the power ratings for the various add-in cards supported in P3 Tower.

Table 2 - Add-in Card Power Ratings

Max Power Rating	Card Name	Card Type	Aux Power Connectors on GPU (if any)	Power Adapters Required (if any)
320W	RTX 4080 (16GB)	Graphics Card (Dual Slot)	12VHPWR	None
	RTX 3080 (10GB)	Graphics Card (Dual Slot)	Dual 8-pin (PCIe)	12VHPWR to dual 8-pin PCIe (1100W PSU) 8-pin to dual 8-pin PCIe (750W PSU)
300W	RTX A6000 (48GB)	Graphics Card (Dual Slot)	8-pin (EPS)	8-pin EPS to dual 8-pin (PCIe) Provided by Nvidia
230W	RTX A5500 (24GB)	Graphics Card (Dual Slot)	8-pin (PCIe)	None
200W	RTX A4500 (20GB)	Graphics Card (Dual Slot)	8-pin (PCIe)	None
140W	RT A4000 (16GB)	Graphics Card (Single Slot)	6-pin (PCIe)	None
75W max	T400(4GB), T1000(8GB)	Graphics Card (Single Slot)	None	None
	RTX A2000(12GB)	Graphics Card (Dual Slot)	None	None
	Other PCIe Cards	Other PCIe Cards (Single Slot)	None	None

Section 3 – P3 Tower Power Configurations

P3 Tower supports 500W, 750W and 1100W power supplies, which allow customers to tailor their system to best meet the requirements of the components they intend to support. The following diagrams and notes show allowable hardware configurations for systems with either power supply.

Note: While the 500W power supply has a functional 6+2pin PCIe auxiliary power connector, auxiliary-powered GPUs are currently not supported for use with this power supply by Lenovo at the time of this writing. Please refer to P3 Tower Power Supply Configuration Notes.

500 Watt PSU

- Single 6+2 pin PCIe auxiliary power drop*
- GPUs cannot be mixed in dual-GPU configs
- Intel Core i9-13900K and i7-13700K can't support any discrete GPU

CPU - up to 125W

All UDIMM Memory

No Storage Limitations

GPU Support

75W x 2

no AUX powered discrete GPUs support

**PCIe power drop is functional, but Lenovo does not support using it to power GPUs at this time.*

750 Watt PSU

- Single 6+2 pin PCIe auxiliary power drop
- Provides single dedicated 12V rail
- GPUs cannot be mixed in dual-GPU configs
- Some supported GPU configurations might require additional cabling (See Appendix)
- Comes with a side fan assembly

***Cannot support Nvidia 4080 GPU**

CPU - up to 125W

All UDIMM Memory

SATA bay 4 is not supported**

GPU Support

320W x 1*
or
300W x 1
or
230W x 1
or
200W x 1
or
140W x 1
or
75W x 2

1100 Watt PSU

- Single 16-pin 12VHPWR auxiliary power drop
- Provides single dedicated 12V rail
- GPUs cannot be mixed in dual-GPU configs
- Some supported GPU configurations might require additional cabling (See Appendix)
- Comes with a side fan assembly

CPU - up to 125W

All UDIMM Memory

SATA bay 4 is not supported**

GPU Support

320W x 1
or
300W x 1
or
230W x 1
or
200W x 1
or
140W x 1
or
75W x 2

** SATA bay 4 is not supported for 750W and 1100W PSUs due to side fan assemble interference.

P3 Tower Power Supply Configuration Notes:

- Officially supported configurations could still be limited by additional factors not defined within this document.
- Some supported GPU/add-in-card configurations might require additional cabling to be supported. See Appendix.
- **For configurations that are not listed above but appear to be feasible, please work with the Technical Solutions Team to have the configuration validated/vetted.**

Section 4 – Appendix

This section contains additional useful information about the hardware used to power adapter cards in ThinkStation systems.

Power Connectors:

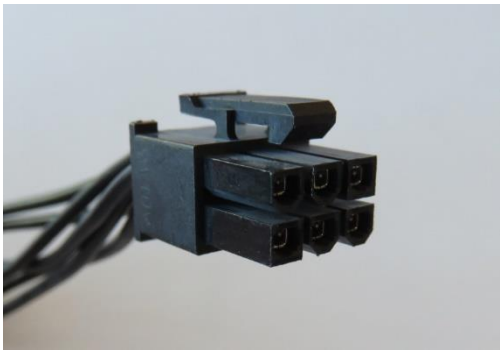

6-pin PCIe Power Connector

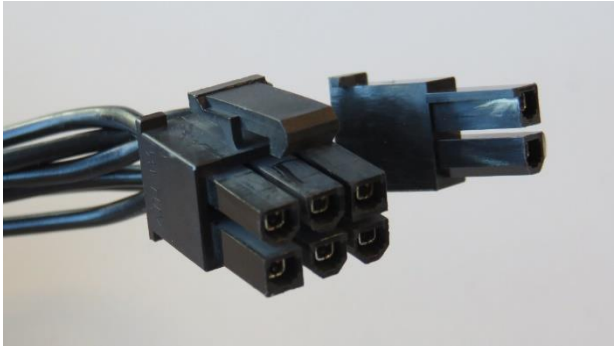

6+2 pin PCIe Power Connector

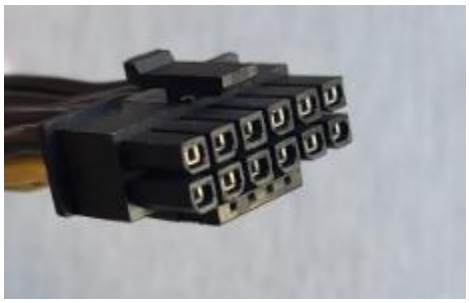

12HPWR Connector

8-pin (female) to dual 8-pin PCIe Power Cable (FRU# 5C10U58353)

12VHPWR (female) to dual 6+2-pin Power Cable (FRU# 5C10U58750)

Revision History

Version	Date	Author	Changes/Updates
1.0	6/12/2022	A. Panteleev	Initial launch release
1.1	8/7/2022	A. Panteleev	Added RTX A4000 support