SonicWave / SonicPoint Mounting Kit Instructions

The SonicWall SonicWave/SonicPoint mounting kit supports multiple SonicWall Access Points, including SonicWave 432e/432i and SonicPoint ACe/ACi/N2. The kit includes two types of ceiling brackets and a pair of T-bar mounting clips along with screws and drywall anchors. The underside of the Access Point has one of two possible slot configurations for mounting the device. Use the mounting hardware that matches the slots on your Access Point. See the following sections:

- Mounting Access Points with Horizontal Slots
- Mounting Access Points with Crossed Slots

Mounting Access Points with Horizontal Slots

Access Point Underside with Horizontal Slots:

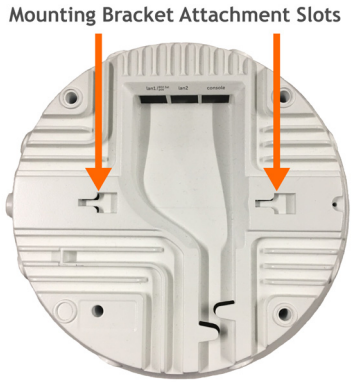

An Access Point with horizontal slots can be mounted to a drop-ceiling T-bar or to a flat surface with the multi-purpose bracket. The bracket provides two pairs of T-bar locking tabs that support two ceiling T-bar widths: 15/16 inch and 9/16 inch.

Mounting Bracket Top:

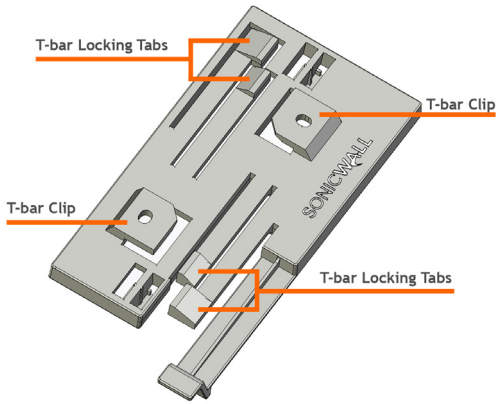

Mounting Bracket Bottom:

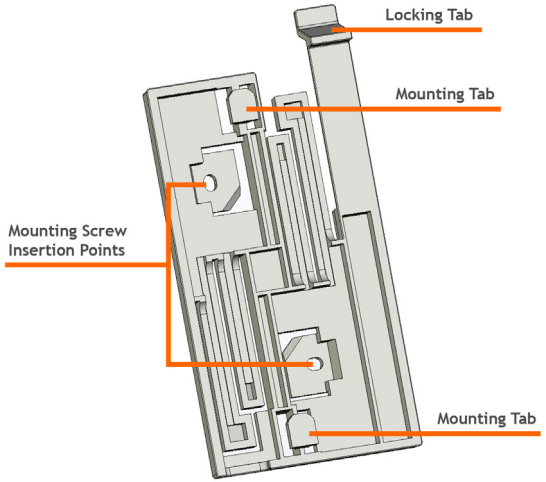

The mounting bracket must first be securely attached to the ceiling or wall. The bracket can clip onto ceiling T-bars or can be screwed directly into the wall or ceiling.

To attach the mounting bracket to the ceiling using T-bar clips:

1. Press the top side of the mounting bracket against the ceiling tile T-bar so that the T-bar locking tabs on the mounting bracket are depressed.
2. Rotate the mounting bracket until the ceiling T-bar slides into the T-bar clips on the mounting bracket and the T-bar locking tabs click into place.

Bracket attached to ceiling T-bar:

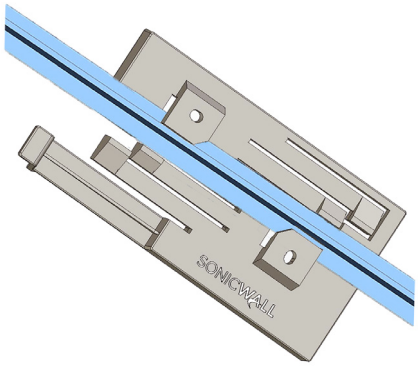

For mounting on a flat surface, holes in the T-bar clips on the bracket provide insertion points for screws. Use the #6 (3.5mm) screws of length 1.25 inches (31.75 mm) included in this mounting kit.

When mounting on drywall or into ceiling tiles, anchors should be used. Anchors must accommodate the screws and be rated to hold at least 10 lbs (4.5 kg). The anchors are included in this mounting kit.

Screws and Anchors:

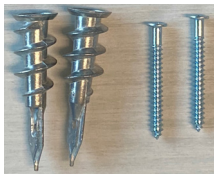

To attach the mounting bracket to the ceiling or to a wall using screws:

1. Place the top side of the mounting bracket against the ceiling or wall and mark the locations for the two screw insertion points.
2. Drill starter holes at the marked locations. For a wood wall, use a drill bit that fits the screws. For drywall, use a drill bit that fits the anchors.
3. For drywall or ceiling tile mounting, screw in the anchors.
4. Place the mounting bracket against the surface with the holes lined up on the marks or anchors.
5. Using the screws and a screwdriver, securely attach the mounting bracket to the ceiling or wall.

To attach the Access Point to the mounting bracket:

1. Line up the two horizontal slots on the back of the Access Point with the mounting tabs on the mounting bracket.
2. Insert the mounting tabs into the Access Point and slide the Access Point down until the locking tab on the bracket clicks into place on the Access Point.

NOTE: To detach the Access Point from the bracket, press on the locking tab to release it, then slide the Access Point in the reverse direction to free the mounting tabs.

Mounting Access Points with Crossed Slots

Access Point Underside with Crossed Slots:

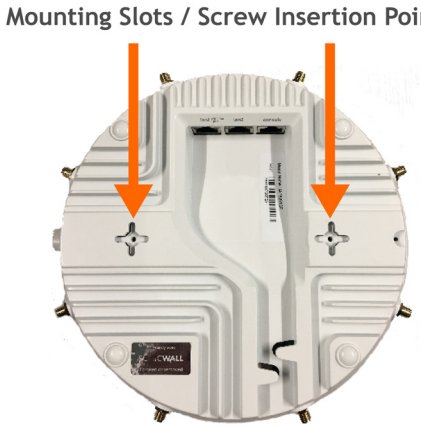

The underside of an Access Point with the crossed “plus” slots has two screw insertion points in the slot centers for attaching the mounting bracket or mounting clips.

The large T-bar mounting bracket or the small T-bar mounting clips can be used to mount the Access Point on a drop-ceiling T-bar.

Large Mounting Bracket for Crossed Slots Access Point:

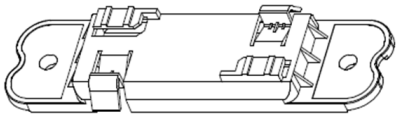

To attach the bracket to the Access Point:

1 Press the flat side of the bracket to the underside of the Access Point, lining up the holes in the bracket with the screw insertion points in the slot centers on the Access Point.

2 Insert the provided screws (#6 Phillips thin head (3.5mm)) and tighten them with a screwdriver to attach the bracket to the Access Point.

To mount the Access Point to a ceiling T-bar using the bracket:

1 Supporting the Access Point in one hand, position the T-bar clips on the bracket over the edge of the ceiling T-bar.

2 Rotate the Access Point counterclockwise (to the left when looking up at it) until the bracket is securely attached to the T-bar.

NOTE: To remove the Access Point from the ceiling T-bar, gently press it upward and rotate it clockwise (to the right when looking up at it) until the bracket detaches from the T-bar.

Small T-bar Mounting Clips:

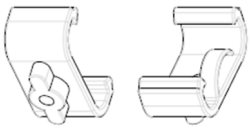

To attach the mounting clips and mount the Access Point to a T-bar:

1 Use the included small screws to attach the mounting clips to the underside of the Access Point, making both brackets parallel.

2 Supporting the Access Point in one hand, clip the edge of each bracket over the edge of the T-bar. Make sure the Access Point is securely attached to the T-bar before releasing it.

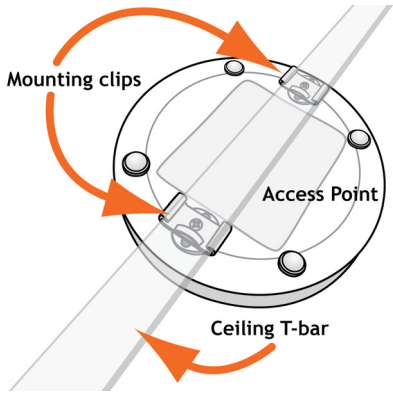

If T-bar mounting is not appropriate, you can mount the Access Point on the ceiling or wall using the provided screws and anchors.

To mount the crossed slot Access Point using screws and anchors:

1 Measure the distance between the screw insertion points on the underside of the Access Point.

2 On the mounting surface, mark the location to make two screw holes separated by the above measurement. The marks should be horizontally parallel to each other.

3 Screw the drywall anchors into the ceiling tile or drywall to their full depth.

4 Insert the screws into the anchors, and screw them in deep enough to leave minimal space between the screw heads and the wall surface.

5 Supporting the Access Point in your hands, securely fit the mounting slots of the Access Point onto the screw heads.

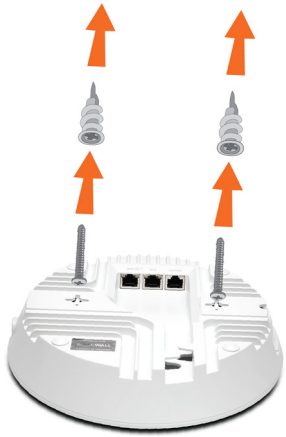

Copyright © 2020 SonicWall Inc. All rights reserved.

SonicWall is a trademark or registered trademark of SonicWall Inc. and/or its affiliates in the U.S.A. and/or other countries. All other trademarks are property of their respective owners.

The information in this document is provided in connection with SonicWall Inc. and/or its affiliates' products. No license, express or implied, by estoppel or otherwise, to any intellectual property right is granted by this document. SonicWall Inc. and/or its affiliates do not make any commitment to update the information contained in this document. For more information, visit http://www.sonicwall.com/legal.

SonicWall SonicWave/SonicPoint Mounting and Installation Guide
Updated - July 2020
232-005304-50 Rev A

SonicWall® SonicWave/SonicPoint

Mounting and Installation Guide

SONICWALL®