Paper and Specialty Media Guide

Laser Printers

June 2024

www.lexmark.com

June 2024

The following paragraph does not apply to any country where such provisions are inconsistent with local law: LEXMARK INTERNATIONAL, INC., PROVIDES THIS PUBLICATION “AS IS” WITHOUT WARRANTY OF ANY KIND, EITHER EXPRESS OR IMPLIED, INCLUDING, BUT NOT LIMITED TO, THE IMPLIED WARRANTIES OF MERCHANTABILITY OR FITNESS FOR A PARTICULAR PURPOSE. Some states do not allow disclaimer of express or implied warranties in certain transactions; therefore, this statement may not apply to you.

This publication could include technical inaccuracies or typographical errors. Changes are periodically made to the information herein; these changes will be incorporated in later editions. Improvements or changes in the products or the programs described may be made at any time.

References in this publication to products, programs, or services do not imply that the manufacturer intends to make these available in all countries in which it operates. Any reference to a product, program, or service is not intended to state or imply that only that product, program, or service may be used. Any functionally equivalent product, program, or service that does not infringe any existing intellectual property right may be used instead. Evaluation and verification of operation in conjunction with other products, programs, or services, except those expressly designated by the manufacturer, are the user’s responsibility.

For Lexmark technical support, go to **http://support.lexmark.com**.

For information on Lexmark's privacy policy governing the use of this product, go to **www.lexmark.com/privacy**.

For information on supplies and downloads, go to **www.lexmark.com**.

© **2016 Lexmark International, Inc.**

All rights reserved.

GOVERNMENT END USERS

The Software Program and any related documentation are "Commercial Items," as that term is defined in 48 C.F.R. 2.101, "Computer Software" and "Commercial Computer Software Documentation," as such terms are used in 48 C.F.R. 12.212 or 48 C.F.R. 227.7202, as applicable. Consistent with 48 C.F.R. 12.212 or 48 C.F.R. 227.7202-1 through 227.7207-4, as applicable, the Commercial Computer Software and Commercial Software Documentation are licensed to the U.S. Government end users (a) only as Commercial Items and (b) with only those rights as are granted to all other end users pursuant to the terms and conditions herein.

Trademarks

Lexmark and the Lexmark logo are trademarks or registered trademarks of Lexmark International, Inc. in the United States and/or other countries.

All other trademarks are the property of their respective owners.

Contents

Introduction..... 5

Design considerations for purchasing paper..... 7

Paper industry overview..... 7
Paper design factors..... 7

Guidelines for selecting and using paper..... 12

Paper..... 12
Recycled paper..... 14
Card stock..... 15
Envelopes..... 17
Labels..... 18
Troubleshooting..... 27
Transparencies..... 28
Unacceptable paper..... 28
Using recycled paper..... 28
Storing paper..... 29

Printer-specific paper support..... 30

Lexmark CS963, CX833, CX961, CX962, CX963, XC8355, XC9635, XC9645, XC9655 Printers and MFPs..... 30
Lexmark C2335, CS531, CS632, CS639, CX532, CX635, XC2335 Printers and MFPs..... 73
Lexmark M3350, MS531, MS631, MS632, MS639, MX532, MX632, XM3350 Printers and MFPs..... 80
Lexmark C4342, C4352, CS730, CS735, CS737, CX730, CX735, CX737, XC4342, XC4352 Printers and MFPs..... 84
Lexmark B3340, B3442, M1342, MB3442, MS331, MS431, MS439, MX331, MX431, MX432, XM1342, XM3142 Printers and MFPs..... 91
Lexmark MX931, CX930, CX931, XC9325, XC9335 MFPs..... 94
Lexmark CS943, CX942, CX943, CX944, XC9445, XC9455, XC9465 Printers and MFPs..... 108
Lexmark C2326, CS431, C3426, CS439, CX431, MC3426, XC2326 Printers and MFPs..... 148
Lexmark CS331, CX331, C3224, C3326, MC3224, MC3326 Printers and MFPs..... 151
Lexmark B2236 Printer and MB2236 MFP..... 155
Lexmark C2240, C2325, C2425, C2535, CS421, CS521, CS622, CX421, CX522, CX622, CX625, MC2325, MC2425, MC2535, MC2640, XC2235, XC4240 Printers and MFPs..... 158

Lexmark MS725 Printer and MX725 MFP....164
Lexmark B2865, M5255, M5270, MS821, MS822, MS823, MS825, MS826 Printers....172
Lexmark MB2770, MX721, MX722, XM5365, XM5370 MFPs....181
Lexmark MX822, MX826, XM7355, XM7370 MFPs....187
Lexmark B2338, B2442, B2546, B2650, M1242, M1246, M3250, MS321, MS421, MS521, MS621, MS622 Printers....196
Lexmark MB2338, MB2442, MX321, MX421, XM1242 MFPs....200
Lexmark MB2546, MB2650, MX521, MX522, MX622, XM1242, XM1246, XM3250 MFPs....205
Lexmark C9235, CS921, CS923, CS927, CX921, CX922, CX923, CX924, CX927, XC9225, XC9235, XC9245, XC9255, XC9265 Printers and MFPs....209
Lexmark C6160, CS820, CS827, CX820, CX825, CX827, CX860, XC6152, XC6153, XC8155, XC8160, XC8163 Printers and MFPs....218
Lexmark C4150, CS720, CS725, CS727, CS728, CX725, CX727, XC4140, XC4143, XC4150, XC4153 Printers and MFPs....226

Glossary....232

Introduction

This document provides guidelines to help you select appropriate print materials for the following laser printers.

Series	Printer models
B Series	B2236, B2338, B2442, B2546, B2650, B2865, B3340, B3442
C Series	C2240, C2325, C2335, C2326, C2425, C2535, C3224, C3326, C3426, C4150, C4342, C4352, C6160, C9235, CS331, CS421, CS431, CS439, CS521, CS531, CS622, CS632, CS639, CS720, CS725, CS727, CS728, CS730, CS735, CS737, CS820, CS827, CS921, CS923, CS927, CS943, CS963, CX331, CX421, CX431, CX522, CX532, CX622, CX625, CX635, CX725, CX727, CX730, CX735, CX737, CX820, CX825, CX827, CX833, CX860, CX921, CX922, CX923, CX924, CX927, CX930, CX931, CX942, CX943, CX944, CX961, CX962, CX963
M Series	M1242, M1246, M1342, M3250, M3350, M5255, M5270, MB2236, MB2338, MB2442, MB2546, MB2650, MB2770, MB3442, MC2325, MC2425, MC2535, MC2640, MC3224, MC3326, MC3426, MS321, MS331, MS421, MS431, MS439, MS521, MS531, MS621, MS622, MS631, MS632, MS639, MS725, MS821, MS822, MS823, MS825, MS826, MX321, MX331, MX421, MX431, MX432, MX521, MX522, MX532, MX622, MX632, MX721, MX722, MX725, MX822, MX826, MX931
X Series	XC2235, XC2240, XC2326, XC2335, XC4140, XC4143, XC4150, XC4153, XC4240, XC4342, XC4352, XC6152, XC6153, XC8155, XC8160, XC8163, XC8355, XC9225, XC9235, XC9245, XC9255, XC9265, XC9325, XC9335, XC9445, XC9455, XC9465, XC9635, XC9645, XC9655, XM1242, XM1246, XM1342, XM3142, XM3250, XM3350, XM5365, XM5370, XM7355, XM7370

The information supplied here supersedes other information relating to paper, card stock, labels, and specialty media included with your printer.

In addition to printer-specific paper recommendations, this document also explains design factors to consider when purchasing all types of print materials. For definitions of industry terms, see “Glossary” on page 232. If you have specific stock or design questions, then contact your print materials supplier. For technical assistance contact numbers, see the printer registration card or go to the **international support contact directory**.

Note: Always test print materials thoroughly before buying large quantities. Doing so helps you avoid unexpected printing problems.

Document change history

Date	Changes
June 2024	Added support information for the following products: CS963, CX961, CX962, CX963, XC8355, XC9635, XC9645, XC9655.
April 2023	Added support information for the following products: C2335, CS531, CS632, CS639, CS737, CX532, CX635, CX737, M3350, MS531, MS631, MS632, MS639, MX532, MX632, XC2335, XM3350.
October 2022	Added support information for the following products: MX432, XM3142.
May 2022	Added support information for the following products: CS943, CX930, CX931, CX942, CX943, CX944, MX931, XC9325, XC9335, XC9445, XC9455, XC9465.
February 2022	Added support information for the following products: C4342, C4352, CS730, CS735, CX730, CX735, XC4342, XC4352.

Date	Changes
January 2021	Added support information for the following products: C2326 M1342 XM1342 XC2326.
May 2020	Added support information for the following products: CS439, MS439, XC4143, XC4153, XC6153, XC8163.
March 2020	Added support information for the following products: B3340, B3442, C3426, CS431, CX431, MB3442, MC3426, MS331, MS431, MX331, MX431.
July 2019	Added support information for the following products: CS331, CX331, C3224, C3326, MC3224, MC3326.
February 2019	Added support information for the following products: B2236 and MB2236.
June 2018	Added support information for the following products: B2865, C2240, C2325, C2425, C2535, CS421, CS521, CS622, CX421, CX522, CX622, CX625, MC2325, MC2425, MC2535, MC2640, M5255, M5270, MB2770, MS725, MS821, MS822, MS823, MS825, MS826, MX721, MX722, MX725, MX822, MX826, XC2235, XC2240, XC4240, XM5365, XM5370, XM7355, XM7370.
April 2018	Added support information for the following products: B2338, B2442, B2546, B2650, M1242, M1246, M3250, MB2338, MB2442, MB2546, MB2650, MS321, MS421, MS521, MS621, MS622, MX321, MX421, MX521, MX522, MX622, XM1242, XM1246, XM3250.
August 2017	Added support information for the following products: C9235, CS921, CS923, CS927, CX921, CX922, CX923, CX924, CX927, XC9225, XC9235, XC9245, XC9255, XC9265.
September 2016	Initial document release for the following products: C4150, C6160, CS720, CS725, CS727, CS728, CS820, CS827, CX725, CX727, CX820, CX825, CX827, CX860, XC4140, XC4150, XC6152, XC8155, XC8160.

Design considerations for purchasing paper

Paper industry overview

The paper and label industry includes manufacturers, converters, and distributors.

- *Manufacturers* produce the base stock. If the base is for labels, then manufacturers may ship it on large rolls or in a cut-sheet form.
- *Converters* take the base stock and convert it into cut-sheet products. Converters may work from rolls with or without the adhesive applied. They may also take a base stock and convert it to meet their customer specifications.

  The conversion process includes, but is not limited to, cutting the stock to size, perforating the stock, die-cutting, and applying inks and topcoats. Converters work with their customers to convert the base material into a cut-sheet product designed for use in laser printers.
- *Distributors* are generally the direct link to the customer.

As needs and prices change, distributors may work with different converters and converters may work with different manufacturers. Most businesses follow accepted industry conventions, but specifications, standards, formulations, and processes may vary with time or with different companies.

As a result, labels or paper that worked well in the past may suddenly create printing problems because of a change in material or process.

Some large businesses perform all three functions, from manufacturing to distribution. These companies may offer greater expertise and product consistency than companies that concentrate on one facet of the process.

Some paper manufacturers have a website where you can obtain more detailed information on the paper you are interested in using.

Paper design factors

Print materials have measurable characteristics that you need to consider when selecting or designing forms for your particular application.

Basis weight

Basis weight is a term used to describe the weight in pounds of 500 sheets of paper (one ream). However, the standard paper size determines the weight, which may not be the purchased size. Therefore, the basis weights are not always easily comparable. An example would be the standard size of 20-lb bond paper, which is 17 x 22 inches, and one ream that weighs 20 pounds. If the paper was cut, creating four reams of 8.5 x 11-inch paper, then each ream would be labeled 20-lb bond paper but would only weigh five pounds.

If the same paper weighed 24 pounds, it would be called 24-lb bond. The 24-lb bond paper is thicker, heavier, and more dense than the 20-lb bond. Thicker paper means that less paper can be placed in a tray. Paper that is heavier and more dense may cause paper jams or feed reliability problems in some printers. To verify that the paper basis weight being used is acceptable, see the supported paper weights table in “Printer-specific paper support” on page 30.

Not all basis weights are related to the same standard sheet size. For example, a 70-lb material can be lighter than 40-lb material if it is based on larger base size paper. The metric measurement of grams per square meter (g/m^2) is a more consistent way to compare weights and has been standardized by the International Organization for Standardization (ISO).

Your printer can accept a wide range of stock weights, but materials either too light or too heavy can cause printing problems. Heavy and thicker materials may not heat quickly enough in the fuser, resulting in poor print quality. They may also feed less reliably or skew due to their weight or rigidity. Conversely, lighter materials can wrinkle and jam in the printer due to low beam strength (stiffness).

Use the following table to compare the weights of various types of media.

Metric equivalent (g/m^2)	Basis weight (lb/ream)					
	Bond 431.8 x 558.8 mm (17 x 22 in.)	Offset 635 x 965.2 mm (25 x 38 in.)	Cover 508 x 660.4 mm (20 x 26 in.)	Printing Bristol 571.5 x 889 mm (22.5 x 35 in.)	Index Bristol 647.7 x 774.7 mm (25.5 x 30.5 in.)	Tag 609.6 x 914.4 mm (24 x 36 in.)
60	16	40	18	23	33	37
75	20	51	28	34	42	46
80	21	51	30	36	44	49
90	24	61	33	41	50	55
100	27	68	37	46	55	62
110	29	74	41	50	61	68
120	32	81	44	55	66	74
145	39	98	54	66	80	89
160	43	108	59	73	88	98
175	47	118	65	80	97	108
200	53	135	74	91	111	123
215	57	145	80	98	119	132
255	68	172	94	116	141	157
260	69	176	96	119	144	160
300	80	203	111	137	166	184
Card stock weights may vary ± 5%.						

Depending on the orientation of the stock as it feeds through the printer, you may need to request that heavier materials be cut grain short or grain long to provide flexibility in paper path turns.

For more information about the weights your printer supports, see the individual printer specifications in this document.

Dimensions

All printers have print material dimension limitations. For more information, see the printer documentation. You can sometimes redesign your printed output to overcome these limitations. For example, if your document is shorter than the minimum length supported by the printer, then you can place two documents on a single sheet.

Environment

Lexmark printers meet or exceed all industry emission regulations and standards. Continuous printing on some paper types or other media may create fumes that are not a problem with occasional printing. Make sure that your printer is located in a well-ventilated area.

Temperature and humidity can have a major impact on printing. Even small changes (such as from day to night) can greatly affect feed reliability when the print material is just within the range of acceptability.

We recommend that you condition stock while it is still in the original wrapper. Store the stock in the same environment as the printer for 24 to 48 hours before printing to let the stock stabilize at the new conditions. You may need to extend this time by several days when the storage or transportation environment is very different from the printer environment. Thick stock also requires a longer conditioning period because of the mass of the material.

If you remove the wrapper from the stock before you are ready to load it in the printer, the stock develops uneven moisture content causing the stock to curl. Before loading, we recommend the curl not to exceed 3 mm (0.125 in.). Lighter materials, such as paper labels and some integrated forms, are more likely to have printing problems if curl is present.

Most label manufacturers recommend printing in a temperature from 18–24°C (65–75°F) with relative humidity of 40–60 percent. Lexmark printers are designed to operate in a temperature range of 15.5–32°C (60 to 90°F) with relative humidity of 8 to 80 percent. Printing in an environment outside these recommendations may cause jams, feeding problems, reduced print quality, and predispensing (peeling) labels.

Preprinted inks

Preprinted stock introduces semiliquid and volatile components to the high temperatures and pressure used in the laser printing process. Preprinted inks and colorations withstand a fuser temperature up to 225°C (437°F) and a pressure up to 25 psi without contaminating the printer or creating hazardous fumes.

We do not recommend thermography ink. Thermography inks have a waxy feel, and the printed image appears raised above the surface of the print material. These inks can melt and damage the fuser assembly.

Preprinted inks must also be abrasion-resistant to reduce ink dust and ink contamination in the printer. If you are printing over a preprinted area, the ink must be receptive to toner to ensure adequate fusing.

All preprinted inks must be thoroughly dry before using printed materials. However, we do not recommend using offset powders or other foreign materials to speed drying. To determine whether the ink is compatible with printers that heat the ink to 225°C (437°F), see your ink converter, manufacturer, or vendor.

Perforations and die-cuts

If a perforation exists, the perforation line should stop 1.6 mm (0.06 in.) from each edge of the form. Doing so avoids separating the form in the printer path, resulting in a jam. The location of the perforation affects initial pick strength. Perforations closer to the edge may increase the number of jams. For pressure-sensitive materials such as labels, minimize the number of perforations that go through the backing material or liner.

Perforations should be ironed so the print material lies flat, reducing nesting of forms. Edges should be smooth and clean with no roll-over. *Laser-perfs* (also known as *micro-perfs* or *data-perfs*) provide greater stability and are preferred. These smaller perforations do not normally nest or create excessive paper dust and debris. Make sure that the paper chaff and dust created during the conversion process are removed before packaging.

If perforations *tent*, or crease at the perforation line, the perfs may break, causing a paper jam. Tenting may increase skew, cause double-sheet feeding, or smear the toner on the print material before fusing, resulting in poor print quality. To reduce tenting, use micro-perfs. If the print material is lightly snapped as it moves through the printer, the perforations should hold without breaking.

Die-cutting is used to create shapes in a label or a card stock design. When designing labels, round all corners to prevent delamination of the labels, and avoid cuts through the liner (anvil cuts). Back splits and pop-out windows are also not recommended.

If perforations or die-cuts are part of the design of the print material, ties are recommended. These small uncut areas (approximately 1.6 mm or 0.06 in.) help stabilize the form and prevent tearing at perforations and die-cuts during printing.

For areas with die-cuts or perforations that intersect or create a small end product, ties on the corners of the design provide added stability. Ties may be located anywhere along perforations or die-cuts. For pressure-sensitive products, ties help prevent the labels from peeling off the liner while in the printer. Ties cannot be used to compensate for inadequate release strength of the adhesive in label designs.

Pick roller technology

Some printers have a pick roller assembly that feeds paper more reliably than the corner buckler system used by earlier printer models. The assembly has two rollers that touch the media paper. Avoid placing deep perforations in these areas since the paper may nest, causing multiple sheets to feed. Perforations that could cause nesting and tenting should fall outside the pick roller area on the leading edge of the paper. This is different from the 0.50-inch space we recommend leaving at the top of the form for printers with a corner buckler system. Use micro-perfs to avoid nesting problems.

Make sure that perforations fall outside the 0.12–0.91-inch area on the leading edge of the media.

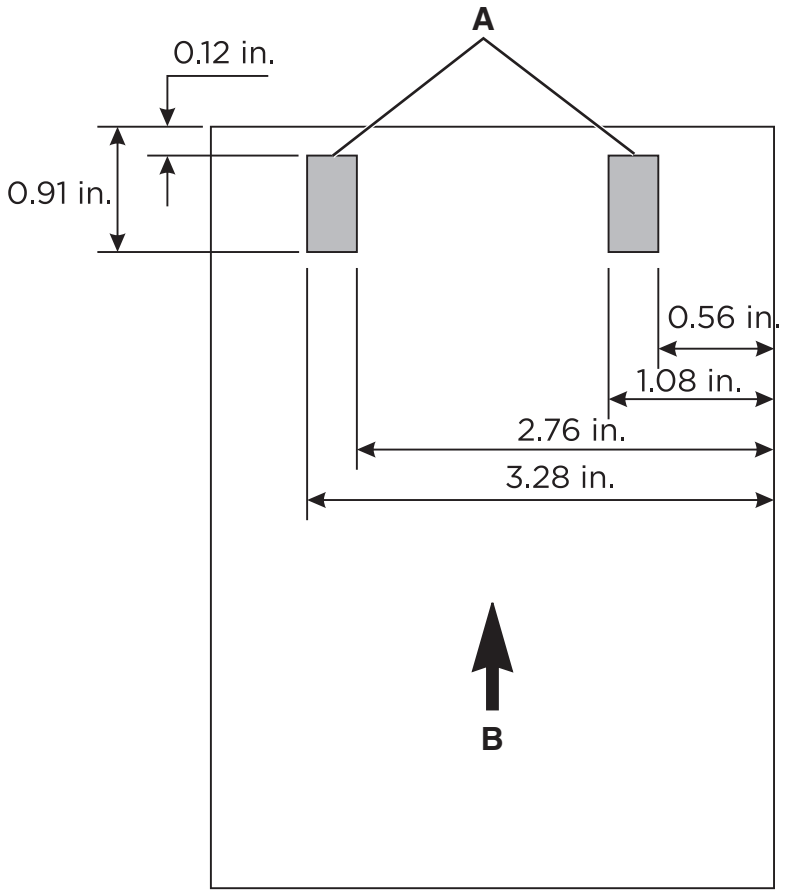

A	Pick roller location
B	Feed direction

Debossing and embossing

Avoid debossing and embossing materials. The use of these materials may lead to nesting and double-sheet feeds, and the fusing process significantly reduces the height of the raised image. Printing too close to embossments results in poor print quality and poor fuse grade.

Metallics

We do not recommend using metallics in forms, whether in inks or other materials, due to their conductivity and their ability to bleed charge. This property can interfere with toner transfer and cause poor print quality.

Basic form design

When designing forms, include a non-print area of 8.38 mm (0.33 in.) at the top and bottom of the form and 6.35 mm (0.25 in.) on both sides of the form.

In general, portrait orientation is the preferred layout, especially if you are printing bar codes. Choosing landscape orientation may cause the variations in paper path speed to produce spacing variations when printing bar codes.

Guidelines for selecting and using paper

Consider the following factors when choosing paper and specialty media:

- Physical characteristics of the base stock and the manufacturing processes are dependent on the vendor and may change over time.
- The quality of print materials can also affect printer reliability and downtime.
- Test the print material before placing a large order to avoid costly mistakes.
- Printing numerous sheets of card stock, labels, or envelopes in a short period can create printing problems. Continuous printing on labels, for example, may result in more frequent service calls. The rollers in the printer can squeeze out the glue on the labels, which can contaminate other printer parts.
- Most labels and card stock have cuts or perforations that can be abrasive if not ironed or flattened.
- Specialty media, in general, may have rough coatings and could be thicker than paper.

The following sections provide paper-specific guidelines. For information about the printing industry and paper design, see “Design considerations for purchasing paper” on page 7.

Paper

Note: Set the paper size, type, texture, and weight in the Paper menu to match the paper loaded in the trays.

Paper guidelines

Use the appropriate paper to prevent jams and help ensure trouble-free printing.

- Always use new, undamaged paper.
- Before loading paper, know the recommended printable side of the paper. This information is usually indicated on the paper package.
- Do not use paper that has been cut or trimmed by hand.
- Do not mix paper sizes, types, or weights in the same tray; mixing results in jams.
- Do not use coated papers unless they are specifically designed for electrophotographic printing.

Paper characteristics

The following paper characteristics affect print quality and reliability. Consider these factors before printing on them.

Weight

Trays can feed paper of varying weights. Paper lighter than 60 g/m^2 (16 lb) may not be stiff enough to feed properly, and may cause jams. For more information, see the “Supported paper weights” topic for your printer model.

Curl

Curl is the tendency for paper to curl at its edges. Excessive curl can cause paper feeding problems. Curl can occur after the paper passes through the printer, where it is exposed to high temperatures. Storing paper unwrapped in hot, humid, cold, or dry conditions can contribute to paper curling before printing and can cause feeding problems.

Smoothness

Paper smoothness directly affects print quality. If paper is too rough, toner cannot fuse to it properly. If paper is too smooth, it can cause paper feeding or print quality issues. We recommend the use of paper with 50 Sheffield points for color laser printers. For mono laser printers, use paper with 150–250 Sheffield points.

Moisture content

The amount of moisture in paper affects both print quality and the printer ability to feed the paper correctly. Leave paper in its original wrapper until you use it. Exposure of paper to moisture changes can degrade its performance.

Before printing, store paper in its original wrapper for 24 to 48 hours. The environment in which the paper is stored must be the same as the printer. Extend the time several days if the storage or transportation environment is very different from the printer environment. Thick paper may also require a longer conditioning period.

Grain direction

Grain refers to the alignment of the paper fibers in a sheet of paper. Grain is either *grain long* which runs the length of the paper, or *grain short* which runs the width of the paper. For recommended grain direction, see the “Supported paper weights” topic.

Fiber content

Most high-quality xerographic paper is made from 100 percent chemically treated pulped wood. This content provides the paper with a high degree of stability, resulting in fewer paper feeding problems and better print quality. Paper containing fibers such as cotton can negatively affect paper handling.

Selecting preprinted forms and letterhead

- Use grain long paper.
- Use only forms and letterhead printed using an offset lithographic or engraved printing process.
- Avoid paper with rough or heavily textured surfaces.
- Use inks that are not affected by the resin in toner. Inks that are oxidation-set or oil-based generally meet these requirements; latex inks might not.
- Print samples on preprinted forms and letterheads considered for use before buying large quantities. This action determines whether the ink in the preprinted form or letterhead affects print quality.
- When in doubt, contact your paper supplier.
- When printing on letterhead, load the paper in the proper orientation for your printer. For more information, see “Printer-specific paper support” on page 30.

Recycled paper

As an environmentally conscientious company, we support the use of recycled paper produced specifically for use in laser (electrophotographic) printers.

While no blanket statement can be made that all recycled paper feeds well, we consistently test papers that represent recycled cut size copier papers available on the global market. This scientific testing is conducted with rigor and discipline.

Recycled paper guidelines

The following paper choice guidelines help alleviate the environmental impact of printing:

- Minimize paper consumption.
- Be selective about the origin of wood fiber. Buy from suppliers who carry certifications such as the Forestry Stewardship Council (FSC) or the Program for the Endorsement of Forest Certification (PEFC). These certifications guarantee that the paper manufacturer uses wood pulp from forestry operators that employ environmentally and socially responsible forest management and restoration practices.
- Choose the most appropriate paper for printing needs: normal 75 or 80 g/m^2 certified paper, lower weight paper, or recycled paper.

Recycled paper characteristics

- Amount of post-consumer waste (tested up to 100 percent post-consumer waste content).
- Temperature and humidity conditions. (Testing chambers simulate climates from all over the world.)
- Moisture content. (Business papers should have low moisture: 4–5 percent.)
- Bending resistance and proper stiffness means optimum feeding through the printer.
- Thickness (impacts how much can be loaded into a tray).
- Surface roughness (measured in Sheffield units; impacts print clarity and how well toner fuses to the paper).
- Surface friction (determines how easily sheets can be separated).
- Grain and formation (impacts curling, which also influences the mechanics of how the paper behaves as it moves through the printer).
- Brightness and texture (look and feel).

Environmental impact

Recycled papers are better than ever; however, the amount of recycled content in a paper affects the degree of control over foreign matter. And while recycled papers are one good path to printing in an environmentally responsible manner, they are not perfect. The energy required to de-ink and deal with additives such as colorants and glue often generates more carbon emissions than does normal paper production. However, using recycled paper enables better resource management overall.

We concern ourselves with the responsible use of paper in general, based on life cycle assessments of our products. To gain a better understanding of the impact of printers on the environment, we commissioned a few life cycle assessments. We found that paper was identified as the primary contributor (up to 80 percent) of carbon emissions caused throughout the entire life of a device (from design to end-of-life). The emission is due to the energy-intensive manufacturing processes required to make paper.

Thus, we seek to educate customers and partners on minimizing the impact of paper. Using recycled paper is one way. Eliminating excessive and unnecessary paper consumption is another. We are well equipped to help customers minimize printing and copying waste. In addition, we encourage purchasing paper from suppliers who demonstrate their commitment to sustainable forestry practices.

Card stock

Card stock is a rigid, stiff material that varies based on the way it is manufactured. Orientation of paper fibers (grain direction), moisture content, thickness, texture, and other properties can significantly impact printing. Preprinting, perforation, creasing, and other features common to forms can impact printing, too. For example, preprinting introduces semiliquid, volatile components that must withstand the high temperatures used in laser printing. Perforation and creasing may cause nesting or interlocking, which can cause paper jams and double-sheet feeds.

In general, we recommend a single-ply construction of 100 percent chemically pulped wood with a vellum finish. Before purchasing large quantities of card stock, make sure that you test samples of the print material in your printer.

Card stock guidelines

- Set the size, type, texture, and weight in the Paper menu to match the card stock loaded in the tray.
- Print samples on the card stock being considered for use before buying large quantities.
- Preprinting, perforation, and creasing may significantly affect the print quality and cause jams or other paper feed problems.
- Do not use preprinted card stock manufactured with chemicals that may contaminate the printer.
- Use grain short card stock when possible.
- Flex, fan, and align the card stock before loading.
- Do not use creased card stock. It may cause paper jams.
- Smoothness of 50 Sheffield points is optimal for color laser printers.
- Smoothness of 150–250 Sheffield points is optimal for mono laser printers.
- Do not use card stock that has offset powder on the surface.

Card stock characteristics

Weight

The weight of card stock significantly affects the print quality and feed reliability of the stock. For more information, see “Basis weight” on page 7.

Not all printers are able to print on cover stock. Cover stock is usually thicker and not able to make the turns in the printer paper path, resulting in paper jams and misfeeds. Also, when using a laser printer, toner is pulled onto the paper through an electrical charge. If the paper is too thick, then there may not be enough voltage to pull the toner onto the paper properly, resulting in poor print quality.

Depending on your printer model, material thicker than 0.30 mm (0.012 in.) may present feed reliability problems, and material thicker than 0.17 mm (0.007 in.) may reduce print quality. Contact your supplier to determine the weight of any card stock you currently use.

For more information about the card stock weights your printer supports, see the individual printer specifications in this document.

Grain orientation

Grain refers to the alignment of the paper fibers in a sheet of paper. Grain is either grain short, running the width of the paper, or grain long, running the length of the paper.

The orientation of the grain contributes to the rigidity of card stock and affects feed reliability. The recommended grain orientation depends on the weight of the card stock and whether the printer feeds the paper short edge first or long edge first. For lighter card stocks, we recommend grain long to reduce potential curl problems. Curl may decrease the ability of the form to move reliably through the printer.

Most printers feed paper short edge first. If your printer supports larger paper sizes, such as 11 x 17 in. or A3, it may feed some paper sizes long edge first. For more information, see the documentation that came with your printer.

For materials fed short edge first

Grain short is recommended for stock heavier than 135 g/m^2.	Grain long is recommended for stock lighter than 135 g/m^2.
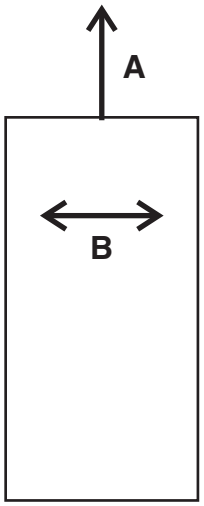	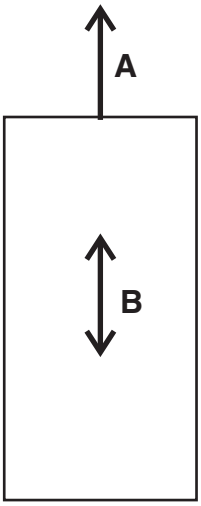
A Feed direction **B** Grain direction	

For materials fed long edge first

Grain long is recommended for stock heavier than 135 g/m^2.	Grain short is recommended for stock lighter than 135 g/m^2.
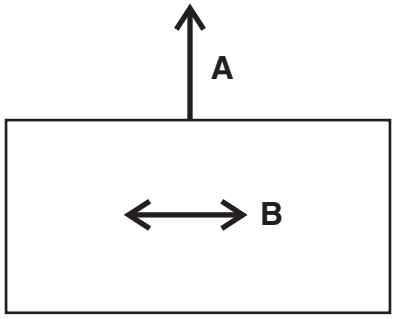	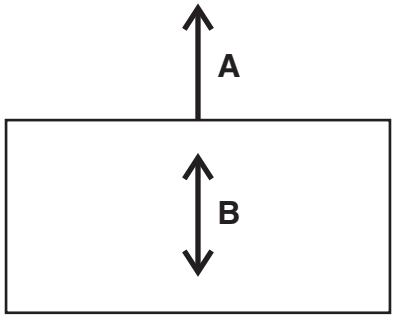
A Feed direction **B** Grain direction	

For more information about the recommended grain direction for card stock, see "Printer-specific paper support" on page 30.

Coatings

Surface texture and coatings on card stock significantly affect toner adhesion (fuse grade), print quality, and feed reliability. We recommend a vellum finish for the best printing performance. We do not recommend glossy coatings and slick surfaces or surfaces that mimic laid finishes (glossy paper, not glossy card stock, is acceptable for some printers). Paper smoothness also affects print quality. If the paper is too rough, the toner does not fuse to the paper properly. If the paper is too smooth, it can affect feed reliability. We recommend smoothness to be from 50 to 300 Sheffield points (50 Sheffield is optimal) for color laser printers. For mono laser printers, we recommend 150–250 Sheffield points. Using media higher than 300 Sheffield could result in printing degradation.

For more information about the individual printer Sheffield recommendations, see "Printer-specific paper support" on page 30.

Offset powders

We do *not* recommend using offset powders or other foreign materials to speed drying. Offset powders are used by print shops to prevent printed pages from sticking together. Powder is usually sprayed on the printed page right before it reaches the stacker on the offset printing press. This powder provides an intermediate layer between two sheets of paper, preventing ink from transferring from one sheet to another.

Envelopes

Envelope guidelines

- Set the paper size, type, texture, and weight in the Paper menu to match the envelopes loaded in the tray.
- Print samples on the envelopes being considered for use before buying large quantities.
- Use envelopes designed specifically for laser printers.
- For best performance, use envelopes made from 90 g/m^2 (24-lb) paper or 25 percent cotton.

- Use only new envelopes from undamaged packages.
- Adjust the guides to fit the width of the envelopes.
- Flex, fan, and align the sheets before loading.

  Note: A combination of high humidity (over 60 percent) and high printing temperature may wrinkle or seal envelopes.

Optimizing envelope performance

To minimize jams, do not use envelopes that:

- Have an excessive curl or twist
- Are stuck together or damaged in any way
- Have windows, holes, perforations, cutouts, or embossing
- Have metal clasps, string ties, or folding bars
- Have an interlocking design
- Have postage stamps attached
- Have any exposed adhesive when the flap is sealed or closed
- Have bent corners
- Have rough, cockle, or laid finishes

For more information about envelope support for your printer, see “Printer-specific paper support” on page 30.

Labels

Labels or pressure-sensitive materials are multi-ply materials that contain various combinations of face sheets (printable stock), adhesives, and removable protective backings (liners). These layers can result in thick materials that are difficult to handle.

Labels are among the most difficult print materials for any printer to feed reliably and print. Factors, such as heat, pressure, and paper path, could make printing on labels quite challenging. For example, temperatures near 225°C (437°F) and pressures to 25 psi can be necessary for the fusing process. Temperatures vary between printers. Check the section for your specific printer. Heavy label stock can absorb heat, which affects toner adhesion and print quality, causing delamination.

Note: Make sure that you use labels specifically designed for laser printer to prevent labels from peeling off or delaminating.

Label guidelines

- Set the paper size, type, texture, and weight in the Paper menu to match the labels loaded in the tray.
- Print samples on labels before buying large quantities.
- Use labels designed specifically for laser printers.
- Do not use labels with slick backing material.
- Do not use labels with exposed adhesive.

- Use full label sheets. Partial sheets may cause labels to peel off during printing, resulting in a jam. Partial sheets also contaminate the printer and the cartridge with adhesive, and could void the printer and toner cartridge warranties.
- Flex, fan, and align the label edges before loading.
- Use only label sheets that have no gaps between the labels.



- Do not print a large number of labels continuously.
- Do not use labels that have coating or sizing applied to make the labels liquid-resistant.
- Run labels only once through the printer as this may contaminate the printer.
- Load label sheets with the label end first.
- Use grain long paper instead of grain short paper, which tends to curl easily.

Review label designs with a converter or a vendor who has extensive knowledge about labels and laser printers to ensure that you are using the proper type of labels.

For more information about label support for your printer, see “Printer-specific paper support” on page 30.

Label components

Labels are composed of three basic parts: the liner, the adhesive, and the face sheet. Labels may also have topcoats that affect printing. To prevent labels from peeling off, follow the recommended label design guidelines. Peeled off labels could cause jams. The label or adhesive could also melt when the sheet is jammed in the fuser. Choosing appropriate materials for each of these label components helps ensure reliable printing.

Liners

The *liner*, also known as the carrier or backing, is the material onto which the label is attached. The liner carries the label through the printer and directly affects feed reliability. Liner weights and construction vary based on the printable face stock used. For more information, see “Face sheet (printable stock)” on page 21.

Tissue-backed, plain bond, or bond-like, porous, lay-flat liners are preferred. Liners constructed for use with high-speed laser printers (50 pages per minute or more) may not produce acceptable results.

A liner should bend easily and go back to its original flat state when released. Forms that remain bent may cause paper jams or damage to the edge of the sheet. This bent affects earlier printer models using a corner buckler rather than a pick roller assembly to separate the sheets.

Some liner materials used in pressure-sensitive constructions are called *label papers*. Label papers are either machine finish (MF) or English finish (EF) papers that are calendered, supercalendered, or coated on one side. An MF has varying degrees of surface smoothness. The number of times the paper passes through the rollers (wet or dry) during manufacturing determines the surface smoothness. An EF is uncoated and low gloss in appearance. Label papers may also be used as the face sheet for pressure-sensitive paper products, such as the materials used in dual web forms construction.

Supercalendering produces high gloss surfaces that may be slick. Some supercalendered liners are difficult for printers to pick and feed reliably. We do not recommend using supercalendered liners designed for high-speed laser printers (50 or more pages per minute).

Some pressure-sensitive constructions use kraft liners or bleached ones. Kraft liners are made from sulfate pulp and are MF or machine glazed (MG). Most MG papers have a high gloss appearance. High gloss, glazed surfaces may increase skew and are more difficult for the printer feed mechanism to handle reliably. Some kraft liners may produce acceptable results; however, we strongly recommend extensive testing of pressure-sensitive constructions using kraft liners.

Tissue-backed or plain bond liners reduce toner contamination inside the printer and improve feed performance. Slick, non-porous liners are harder to feed and increase toner buildup in the fuser and on the backup roll. Rough backings can increase paper path friction, which can cause skew and paper jams. The face material of the liner needs to have a melt temperature that can also withstand the fuser temperatures of nearly 225°C (437°F). A stripped area of a maximum of 3 mm (0.12 in.) can expose the face material to these temperatures and could cause melting or contamination in the fuser.

Excessive paper dust or chaff associated with the liner may affect print quality. If a liner produces excessive paper dust or chaff during conversion, then the debris may be packaged with the material and end up in the printer. These properties as they feed through the printer may also affect print quality. For more information about liners, see your label supplier.

Adhesives

There are three basic types of label adhesives: removable, permanent, and semipermanent (cold temp). All types, with proper design, can be used with your printer. Acrylic-based adhesives are generally preferred for cut-sheet label printers.

The major adhesive-related printing problem is printer and cartridge contamination. The adhesives are semiliquid and may contain volatile components. If the sheet jams in the fuser, the adhesive can melt, contaminating parts of the printer or releasing fumes. To avoid exposing adhesive to the paper path guides, drive rollers, charge roller, photoconductor drum, transfer roller, and detack fingers, use full label sheets.

Zone coating means placing the adhesive only where needed. Paper labels and integrated forms typically use zone coating. In addition, a non-adhesive border of 1 mm (0.04 in.) around the outside edge of the label sheet generates good results. For more information about designing labels for your printer, see your adhesive manufacturer or label supplier.

A *stripped edge matrix* along the outer border of the stock, combined with adhesive that does not ooze, helps prevent adhesive contamination. This design requires a stiffer backing material to prevent damage when the sheet is aligned on the reference edge. Generally, vinyl and polyester labels are well-suited for this design. Paper and dual web designs may require testing to determine which backing produces good results.

Make sure that the release strength is adequate so labels stay attached to the liner and do not peel off in the printer. Adhesives should withstand pressures up to 25 psi and fuser temperatures of 225°C (437°F) without delaminating, creating hazardous fumes, or oozing around edges of labels, perforations, or die-cuts. Shear strength should be strong enough to prevent adhesive stringers. For more information, contact your label supplier.

Face sheet (printable stock)

Paper, vinyl, and polyester are the most common materials used for printable stock. Printable stock must withstand temperature up to 225°C (437°F) and pressures up to 25 psi. For more information, see your label supplier.

Carefully test the printable stock to make sure that it functions satisfactorily with your printer.

Topcoats

Topcoats for non-paper labels may be either water-based or solvent-based. Avoid topcoats containing chemicals that emit hazardous fumes when heated or exposed to pressure. Topcoats affect the print quality, feed reliability, and adhesion of toner to the face sheet. Topcoats should withstand temperatures up to 225°C (437°F) and pressures up to 25 psi for 100 milliseconds to prevent fuser damage.

Water-based topcoats tend to be more conductive than solvent-based topcoats and are more difficult to fuse. With some water-based topcoats and heavy liners, the fuse grade may fall below acceptable levels. Solvent-based topcoats tend to be lower in conductivity than water-based topcoats. With some solvent-based topcoats, fuse grade is within acceptable levels when heavier liners are used.

Print quality may degrade when using topcoats on labels with heavier liners. Using a lighter liner may reduce the appearance of splatter. Carefully test the labels to make sure the topcoat functions satisfactorily with your printer.

Label characteristics

The materials used to construct labels have a wide range of properties that can affect printing. Volatile components are in the label materials and in the adhesive itself. We recommend that volatile emissions from the label, up to 160°C (320°F), should be a minimal amount. The volatile components, which have low boiling point, produce emissions when heated in the fuser and could emit vapors that can damage the printer.

Preprinted inks can also cause printer contamination, and may be present on one or both sides of the label sheet.

Before purchasing large quantities of labels, make sure that you extensively test the labels with your printer.

Labels with a stripped edge matrix do not have the area around the outer edge of the cut sheet. Labels with a total strip matrix do not have the die-cut stock around and between the labels. This property makes it easy to peel the labels from the backing.

Butt cut labels are cut flush to one another, with no extra area between them. Avoid using butt cut labels without a stripped edge matrix.

Die-cut labels are cut with a non-print area between each label. For best results, do not print within 2.3 mm (0.09 in.) of the edge of the label, of the perforations, or of the die-cuts of the label.

If you are using a butt cut or die-cut label, then make sure that adhesive contamination does not occur. Labels use varying levels and types of adhesive, and various liner materials and face stock papers. Adhesive can ooze from all label stocks. Make sure that die-cuts are free of adhesive stringers. To prevent adhesive contaminations, use zone coating or pattern adhesive with a non-adhesive border of about 1 mm (0.04 in.) or larger.

If zone coating is not used, then we recommend a stripped edge matrix. The stripped edge matrix varies with the type of face stock, liner, and adhesive materials. The following table shows the guidelines for stripped edge matrix.

Note: Measurements may vary ± 0.5 mm.

Face type	Total weight of label	Edge matrix removal	Location of strip
Paper* (cut sheet or dual web)	140–180 g/m^2	1.6 mm (0.0625 in.)	215.9 mm (8.5 in.) at leading edge 279.4 mm (11 in.) at driver edge (left margin side)
Vinyl	265–300 g/m^2		
Polyester and other face materials	Varies		
* Use a non-oozing adhesive.			

Using cut sheet labels with adhesive applied to the edge of the sheet contaminates and voids your printer and cartridge warranties.

When using pressure-sensitive materials without zone coating, choose butt cut labels without any stringers and with a stripped edge matrix. If a total strip matrix is in the design for the final product, then print before removing the matrix. If the matrix must be removed before printing, then round all corners, making sure that adhesive is not exposed.

Cut sheet paper labels

Generally, cut sheet paper labels work well with your printer.

Coating or sizing to make the paper liquid-resistant decreases toner adhesion and increases the risk of toner contaminating the fuser. At a minimum, paper labels should be equivalent in weight and rigidity to a 20-lb xerographic bond paper.

Dual web forms

Constructing dual web forms involves joining rolls of two different materials (usually pressure-sensitive paper and bond paper) and then converting to a cut sheet product. This construction requires a stripped edge matrix. The liner must be rigid enough to withstand the pick force of the printer. The two materials must be thin enough for the sheet to lie flat in the paper tray. The differences in thickness may cause the materials to curl down toward the leading edge of the form which can negatively affect feeding.

We recommend that the leading label edge should be thicker than the dual web overlap to make sure that the sheet lies flat in the tray. The label should be placed with the label facedown in the tray. Orient the label in the tray so that the pressure-sensitive area feeds into the printer first. The label should have no adhesive exposed in the overlay area or anywhere along the front or back of the label.

We recommend designing a non-adhesive strip with a minimum width of 1 mm (0.04 in.) along the edges of the overlay. To help prevent material from slipping in the fuser, we recommend knurling, which roughens up the exposed silicon area at the glue joint.

The face sheet of a dual web form is usually a paper pressure-sensitive product; therefore, the guidelines for paper labels are applicable to dual web forms.

The following diagram shows the recommended dual web form design. The non-print area may vary depending on the printer model.

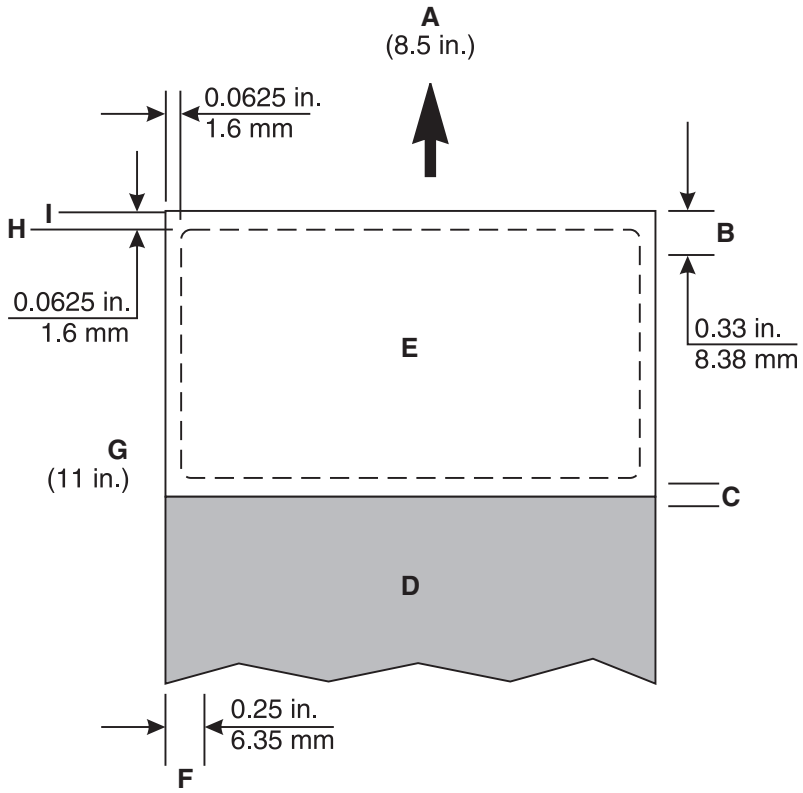

A	Leading edge
B	Non-print area
C	Overlay
D	Paper
E	Pressure-sensitive
F	Non-print area
G	Reference edge
H	Stripped edge
I	Liner edge

Vinyl and polyester labels

Vinyl labels work well within specified design parameters. Vinyls are heat-sensitive, so the liners need to be thick enough to absorb excess heat and prevent melting. A total strip matrix may cause adhesive contamination. Thin liners or weak pull strength may lead to labels peeling off the label inside the printer, which requires printer servicing.

Materials, which have liner face melt temperatures lower than the fuser temperature, may require the leading and trailing edge stripped areas to be 1.6 mm maximum due to feeding problems. We recommend that the liner face is constructed with material that can withstand the fuser temperature, which eliminates changing the stripped areas from 3 mm to 1.6 mm.

When a 1.6-mm stripped area is used, it is very important that the 1.6-mm tolerance be held tightly. With a stripped area of less than 1.6 mm, it is highly possible that adhesive contamination will occur.

Vinyls are non-absorbing, which leads to toner buildup in the fuser that requires special maintenance. For more information about maintaining your printer, see the documentation that came with your printer. Vinyls may require a topcoat to ensure good toner adhesion. When you run vinyl labels, you may be required to install an oil fuser cleaner.

Polyester labels are less heat-sensitive but are also non-absorbing. Backings for polyester labels can be thinner, but requirements for coatings and cleaning are similar to vinyl labels.

Integrated forms

To create integrated forms, the converter uses hot melt adhesives to apply the label adhesive and liner to a base material (generally paper).

Oil bleed, recognizable by a discolored face sheet, can be a problem with these forms. Oil may also migrate from the top to the back surface of the liner while it is on the roll, before the conversion process takes place. The forms may be slick, and the pick mechanism of your printer may be unable to move all the sheets from the tray into the printer. Jamming and misfeeds increase when oil is present on the back of the liner.

The adhesive on these forms is commonly patterned on two or four sides (a non-adhesive border on either two or four edges). We recommend designing a 1-mm (0.04-in.) non-adhesive border (zone coated) on all four edges.

When printing on integrated forms with a grain long base material, position the form in the tray so the paper portion of the form feeds into the printer first. Position the pressure-sensitive portion of the form toward the portrait left edge. For integrated forms with a grain short base material, position the form in the tray so the pressure-sensitive portion feeds into the printer first.

Due to the unique construction of integrated forms, you may experience stacking problems in the output bin. If you experience stacking problems with these forms, then contact your marketing representative.

Note: Test some forms before purchasing large quantities.

Printing on labels

Print on full label sheets only. Sheets with missing labels could peel off during printing and result in a paper jam. Partial sheets can also leave adhesive marks on the printer and cartridge, which could void the printer and cartridge service warranties.

Do not feed labels through the printer more than once. Doing so may contaminate the cartridge and other components with adhesive.

Depending on your printer model and the number of labels being printed, printing labels may require special printer maintenance. For more information about printing on labels, see “Printer-specific paper support” on page 30.

Maintenance procedures

Note: These procedures apply only to mono laser printers.

If print quality begins to degrade when printing on vinyl labels, then do the following:

1. Print on five sheets of paper.
2. Wait approximately five seconds.
3. Print on five more sheets of paper.

To maintain printer feeding reliability, repeat this cleaning process every time you replace the toner cartridge.

Note: Failure to follow maintenance procedures for your printer could cause jams, poor print quality, feeding problems, and fuser problems.

Duplexing labels

Labels are not typically duplexed because of their special construction. However, printing on both sides of the label sheet may be possible if certain design, construction, and usage guidelines are followed.

When developing a paper label for duplexing, the converter should make sure that the label is designed to protect against contamination or buildup. Contamination results in paper feed problems and jams.

We recommend the use of label sheets that have a non-adhesive border around the label area. Make sure that the release strength is enough to withstand temperatures of 225°C (437°F) and pressure up to 25 psi.

Use label ties as needed. These small uncut areas (approximately 1.6 mm or 0.06 in.) help stabilize the label sheet and prevent tearing at perforations and die-cuts during printing. Label ties also prevent labels from predispensing in the printer.

The slits and cuts in the labels expose the adhesives to the printer. For best results, position the label sheet so the slits and cuts are not aligned with the ribs in the duplex or redrive areas of the printer. Doing so eliminates any contact points between the label adhesive and the printer and prevents any adhesive contamination in the printer. For more information, see “Primary rib pattern design guidelines for reference edge alignment” on page 25.

Load label sheets with the label end first. Use grain long paper instead of grain short paper, which tends to curl easily.

If a converter develops a grain short label sheet for duplexing, then test the sheet first to make sure that it works satisfactorily.

Note: We recommend testing any material with your application and printer before purchasing large quantities.

To use the duplex label application, you may be required to install a fuser wiper. The wiper allows the printer to print on both sides of paper labels. To determine whether your printer requires a wiper, see “Printer-specific paper support” on page 30.

Primary rib pattern design guidelines for reference edge alignment

- The function of the primary rib pattern is to provide the best support to the media during transport. If the media touches a certain surface, then that surface must contain the primary rib pattern.
- The feed path should guide the leading edge of the media into the primary guide surface and not the secondary surface. This alignment provides a determinate location for the leading edge of the media on the guide surface that provides the best support.
- The incidence angle of the leading edge of the media as it touches the primary guide surface should be no more than 30°. This angle eliminates media stubbing on the guides and reduces the amount of energy input into the media by the guide.
- The primary rib pattern is to have the rib support extending out to between 3 and 10 mm (0.12 and 0.40 in.) from the edge of the paper. For envelopes, the rib support should extend out between 2 and 10 mm (0.08 and 0.40 in.) from the edge of the envelopes. This rib support keeps the corners of the media stiff so that it cannot fold and catch other surfaces in the printer. It also prevents the corners of the media from catching the inside surface of a paper path rib.

- The primary rib pattern should not have any ribs closer than 3 mm (0.12 in.) to the outside edge of paper and envelopes. This rib allowance keeps the media from stubbing into a rib that is too close to the edge of the media.
- The maximum rib spacing of the primary rib pattern should not be greater than 20 mm (0.79 in.). The spacing keeps the leading edge of the media flat as it moves through the system.

Rib pattern for Lexmark C6160, CS820, CS827, CX820, CX825, CX827, CX860, XC6152, XC8155, XC8160

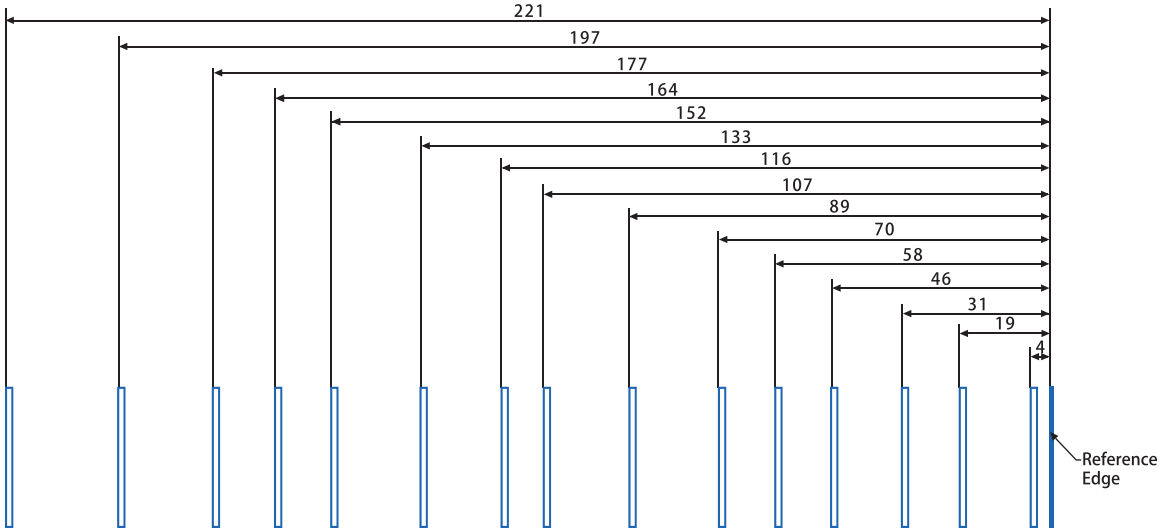

Rib pattern for Lexmark C4150, C4342, C4352, CS720, CS725, CS727, CS728, CS730, CS735, CX725, CX727, CX730, CX735, XC4140, XC4150, XC4342, XC4352

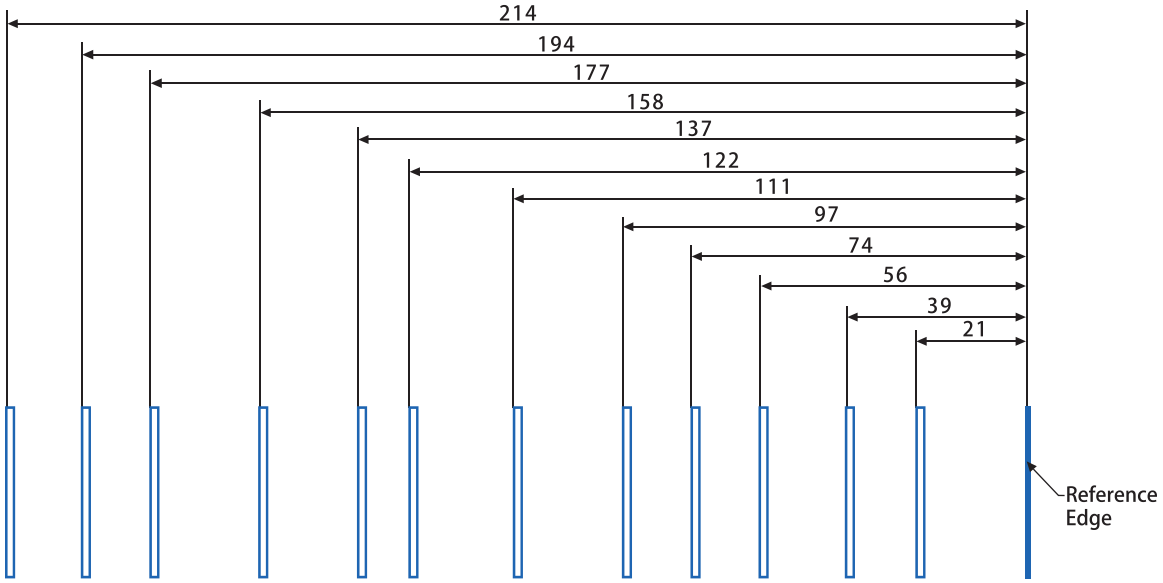

Rib pattern for Lexmark B2865, M5255, M5265, M5270, MB2770, MS725, MS821, MS822, MS823, MS824, MS825, MS826, MX721, MX722, MX725, MX822, MX824, MX826, XM5365, XM5370, XM7355, XM7365, XM7370

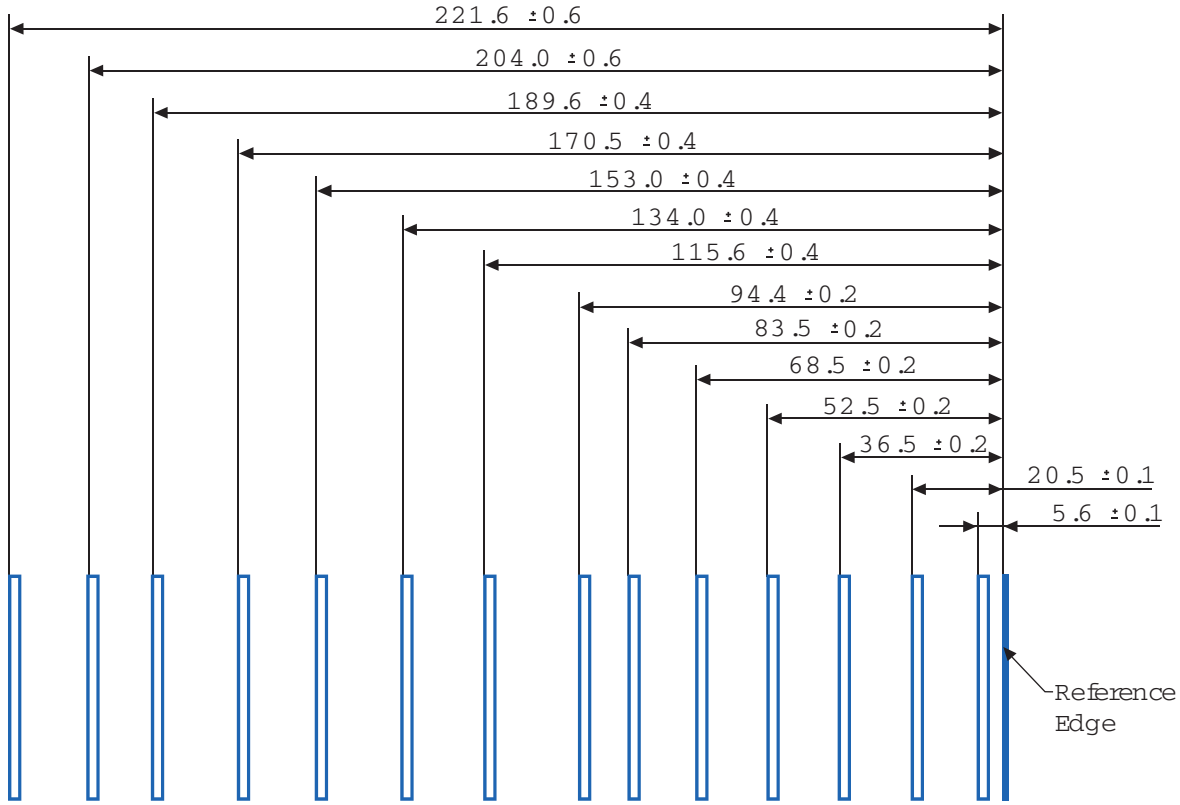

Troubleshooting

The following table provides solutions to some common card stock and label problems. For more troubleshooting information, see your printer documentation.

Problem	Solution
Print on heavy stock is blurred or out of focus.	Make sure the Paper Type setting is correct for your print material. **Note:** Card stock in excess of 203 g/m^2 (54-lb bond) may not produce acceptable print results.
	Print on five sheets of paper, wait for approximately five seconds, and then print five more sheets of paper to remove any toner that may have accumulated.
Toner rubs off the page.	Make sure the Paper Type setting is correct for your print material.
	Use material that is lighter than 300 g/m^2.
	Print on five sheets of paper, wait for approximately five seconds, and then print five more sheets of paper to remove any toner that may have accumulated.
Printing shows voids.	Change the Paper Type to Plain Paper.
	Print on five sheets of paper, wait for approximately five seconds, and then print five more sheets of paper to remove any toner that may have accumulated.

Transparencies

Transparency guidelines

Note: Some printer models may not support transparencies.

- Set the size, type, texture, and weight in the Paper menu to match the transparencies loaded in the tray.
- Print a test page on the transparencies before buying large quantities.
- Use transparencies designed for laser printers.
- Avoid getting fingerprints on the transparencies to prevent print quality problems.
- Flex, fan, and align the sheets before loading. Doing so prevents them from sticking together.

Optimizing transparency performance

- Print batches of up to 20 transparencies with an interval of at least three minutes between batches. Doing so prevents the transparencies from sticking together in the bin. You can also remove transparencies from the bin by batches of 20.
- Change the paper type to Transparency to lower the fuser temperature. The lower temperature prevents the transparencies from discoloring or melting.

For more information about transparency support for your printer, see “Printer-specific paper support” on page 30.

Unacceptable paper

The following paper types are not recommended for use with the printer:

- Chemically treated papers that are used to make copies without carbon paper. They are also known as carbonless papers, carbonless copy paper (CCP), or no carbon required (NCR) paper.
- Preprinted papers with chemicals that may contaminate the printer.
- Preprinted papers that can be affected by the temperature in the printer fuser.
- Preprinted papers that require a registration (the precise print location on the page) greater than ±2.3 mm (±0.09 in.). For example, optical character recognition (OCR) forms.

  Sometimes, registration can be adjusted with a software app to print successfully on these forms.
- Coated papers (erasable bond), synthetic papers, or thermal papers.
- Rough-edged, rough or heavily textured surface papers, or curled papers.
- Papers that fail EN12281:2002 (European).
- Paper weighing less than 60 g/m^2 (16 lb).
- Multiple-part forms or documents.

Using recycled paper

Lexmark works to reduce the environmental impact of paper by providing customers choices when it comes to printing. One way we achieve this is by testing products to ensure recycled paper may be used—specifically, papers made with 30%, 50%, and 100% post-consumer recycled content. Our expectation is that recycled papers perform as well as virgin paper in our printers. While no official standard exists for office equipment use

of paper, Lexmark uses European Standard EN 12281 as a minimum properties standard. To ensure breadth of testing, test paper includes 100% recycled papers from North America, Europe, and Asia, and tests are conducted at 8–80% relative humidity. Testing includes duplex printing. Office paper using renewable, recycled, or chlorine-free content may all be used.

Storing paper

Use these paper storage guidelines to help avoid jams and uneven print quality:

- Store paper in its original wrapper in the same environment as the printer for 24 to 48 hours before printing.
- Extend the time several days if the storage or transportation environment is very different from the printer environment. Thick paper may also require a longer conditioning period.
- For best results, store paper where the temperature is 21°C (70°F) and the relative humidity is 40 percent.
- Most label manufacturers recommend printing in a temperature range of 18–24°C (65–75°F) with relative humidity between 40 and 60 percent.
- Store paper in cartons, on a pallet or shelf, rather than on the floor.
- Store individual packages on a flat surface.
- Do not store anything on top of individual paper packages.
- Take paper out of the carton or wrapper only when you are ready to load it in the printer. The carton and wrapper help keep the paper clean, dry, and flat.

Printer-specific paper support

Lexmark CS963, CX833, CX961, CX962, CX963, XC8355, XC9635, XC9645, XC9655 Printers and MFPs

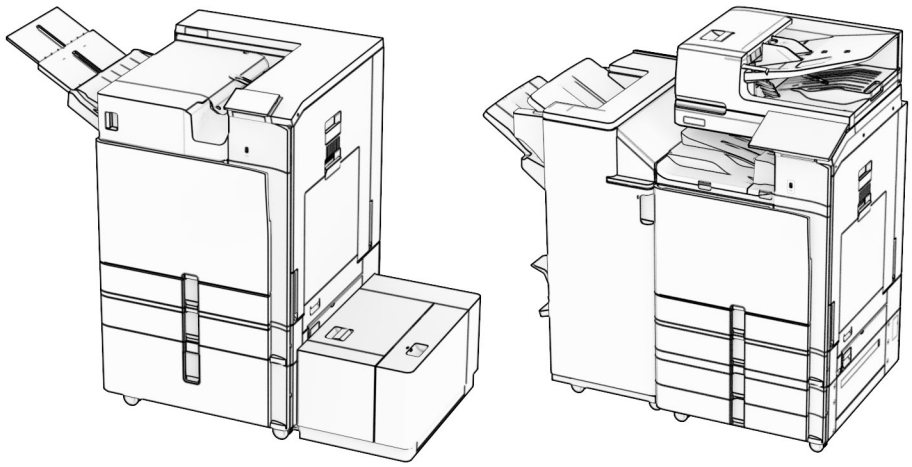

The following tables provide information on standard and optional paper sources and the sizes, types, and weights of paper that they support.

Note: For an unlisted paper size, select the closest *larger* listed size.

Supported paper sizes

Paper sizes supported by the basic configuration

Paper size	Orientation	Standard 550-sheet tray	Multipurpose feeder	Two-sided printing
4x6 Card	Short-edge feed	X	✓	X
	Long-edge feed	X	X	X
A6 105 x 148 mm (4.13 x 5.83 in.)	Short-edge feed	✓	✓	✓
	Long-edge feed	X	X	X

[1] Supported only when configured from the Universal Setup menu.

[2] Supports paper sizes ranging from 95 x 139.7 mm (3.74 x 5.5 in.) to 297 x 355.6 mm (11.69 x 14 in.).

[3] The maximum length of the universal paper size in the case of banner paper is 1320.8 x 52 in. Load only one sheet of banner paper at a time.

[4] Supports paper sizes ranging from 95 x 139.7 mm (3.74 x 5.5 in.) to 320 x 457.2 mm (12.6 x 18 in.).

[5] Supports paper sizes ranging from 105 x 139.7 mm (4.13 x 5.5 in.) to 320 x 457.2 mm (12.59 x 18 in.).

Paper size	Orientation	Standard 550-sheet tray	Multipurpose feeder	Two-sided printing
1/3 A4	Short-edge feed	✓	✓	X
	Long-edge feed	X	X	X
A5 148 x 210 mm (5.83 x 8.27 in.)	Short-edge feed	✓	X	✓
	Long-edge feed	✓	✓	✓
A4 210 x 297 mm (8.27 x 11.7 in.)	Short-edge feed	✓	X	✓
	Long-edge feed	✓	✓	✓
A3 297 x 420 mm (11.69 x 16.54 in.)	Short-edge feed	X	✓	✓
JIS B5 182 x 257 mm (7.17 x 10.1 in.)	Short-edge feed	✓	X	✓
	Long-edge feed	✓	✓	✓
JIS B4 257 x 364 mm (10.12 x 14.33 in.)	Short-edge feed	X	✓	✓
Statement 139.7 x 215.9 mm (5.5 x 8.5 in.)	Short-edge feed	✓	X	✓
	Long-edge feed	✓	✓	✓
Executive 184.2 x 266.7 mm (7.25 x 10.5 in.)	Short-edge feed	✓	X	✓
	Long-edge feed	✓	✓	✓
Letter 215.9 x 279.4 mm (8.5 x 11 in.)	Short-edge feed	✓	X	✓
	Long-edge feed	✓	✓	✓
Folio 215.9 x 330.2 mm (8.5 x 13 in.)	Short-edge feed	✓	✓	✓
Oficio (Mexico) 215.9 x 340.4 mm (8.5 x 13.4 in.)	Short-edge feed	✓	✓	✓

[1] Supported only when configured from the Universal Setup menu.

[2] Supports paper sizes ranging from 95 x 139.7 mm (3.74 x 5.5 in.) to 297 x 355.6 mm (11.69 x 14 in.).

[3] The maximum length of the universal paper size in the case of banner paper is 1320.8 x 52 in. Load only one sheet of banner paper at a time.

[4] Supports paper sizes ranging from 95 x 139.7 mm (3.74 x 5.5 in.) to 320 x 457.2 mm (12.6 x 18 in.).

[5] Supports paper sizes ranging from 105 x 139.7 mm (4.13 x 5.5 in.) to 320 x 457.2 mm (12.59 x 18 in.).

Paper size	Orientation	Standard 550-sheet tray	Multipurpose feeder	Two-sided printing
Legal 215.9 x 355.6 mm (8.5 x 14 in.)	Short-edge feed	✓	✓	✓
Ledger 279.4 x 431.8 mm (11 x 17 in.)	Short-edge feed	X	✓	✓
12x18 304.8 x 457.2 mm (12.0 x 18.0 in.)	Short-edge feed	X	✓	✓
SRA3 320.04 x 449.58 mm (12.6 x 17.7 in.)	Short-edge feed	X	✓	✓
Envelope (Choukei #3) 120 x 235 mm (4.75 x 9.25 in.)	Short-edge feed	✓	✓	X
Hagaki 100 x 148 mm (3.94 x 5.83 in.)	Short-edge feed	✓	✓	X
B5 Envelope 176 x 250 mm (6.93 x 9.84 in.)	Short-edge feed	✓	✓	X
Envelope (Commercial #9) 98.4 x 225.4 mm (3.875 x 8.9 in.)	Short-edge feed	✓	✓	X
Envelope (Commercial #10) 104.8 x 241.3 mm (4.12 x 9.5 in.)	Short-edge feed	✓	✓	X
Envelope (Monarch 7-3/4) 98.4 x 190.5 mm (3.875 x 7.5 in.)	Short-edge feed	✓	✓	X
Envelope (DL) 110 x 220 mm (4.33 x 8.66 in.)	Short-edge feed	✓	✓	X

[1] Supported only when configured from the Universal Setup menu.

[2] Supports paper sizes ranging from 95 x 139.7 mm (3.74 x 5.5 in.) to 297 x 355.6 mm (11.69 x 14 in.).

[3] The maximum length of the universal paper size in the case of banner paper is 1320.8 x 52 in. Load only one sheet of banner paper at a time.

[4] Supports paper sizes ranging from 95 x 139.7 mm (3.74 x 5.5 in.) to 320 x 457.2 mm (12.6 x 18 in.).

[5] Supports paper sizes ranging from 105 x 139.7 mm (4.13 x 5.5 in.) to 320 x 457.2 mm (12.59 x 18 in.).

Paper size	Orientation	Standard 550-sheet tray	Multipurpose feeder	Two-sided printing
Envelope (ISO C4) 229 x 324 mm (9 x 12.8 in.)	Short-edge feed	X	✓[1]	X
Envelope (ISO C5) 162 x 229 mm (6.38 x 9 in.)	Short-edge feed	✓	✓	X
Universal	N/A	✓[2]	✓[3, 4]	✓[5]

[1] Supported only when configured from the Universal Setup menu.

[2] Supports paper sizes ranging from 95 x 139.7 mm (3.74 x 5.5 in.) to 297 x 355.6 mm (11.69 x 14 in.).

[3] The maximum length of the universal paper size in the case of banner paper is 1320.8 x 52 in. Load only one sheet of banner paper at a time.

[4] Supports paper sizes ranging from 95 x 139.7 mm (3.74 x 5.5 in.) to 320 x 457.2 mm (12.6 x 18 in.).

[5] Supports paper sizes ranging from 105 x 139.7 mm (4.13 x 5.5 in.) to 320 x 457.2 mm (12.59 x 18 in.).

Paper sizes supported by the optional trays

Paper size	Orientation	Optional 550-sheet tray	2 x 550-sheet tray	2000-sheet tandem tray	1500-sheet tray
4x6 Card	Short-edge feed	X	X	X	X
	Long-edge feed	X	X	X	X
A6 105 x 148 mm (4.13 x 5.83 in.)	Short-edge feed	✓	✓	X	X
	Long-edge feed	X	X	X	X
1/3 A4	Short-edge feed	X	X	X	X
	Long-edge feed	X	X	X	X
A5 148 x 210 mm (5.83 x 8.27 in.)	Short-edge feed	✓	✓	X	X
	Long-edge feed	✓	✓	X	X
A4 210 x 297 mm (8.27 x 11.7 in.)	Short-edge feed	✓	✓	X	X
	Long-edge feed	✓	✓	✓	✓
A3 297 x 420 mm (11.69 x 16.54 in.)	Short-edge feed	✓	✓	X	X

[1] Supported only when configured from the Universal Setup menu.

[2] Supports paper sizes ranging from 139.7 x 215.9 mm (5.5 x 8.5 in.) to 304.8 x 457.2 mm (12 x 18 in.).

Paper size	Orientation	Optional 550-sheet tray	2 x 550-sheet tray	2000-sheet tandem tray	1500-sheet tray
JIS B5 182 x 257 mm (7.17 x 10.1 in.)	Short-edge feed	✓	✓	X	X
	Long-edge feed	✓	✓	X	✓
JIS B4 257 x 364 mm (10.12 x 14.33 in.)	Short-edge feed	✓	✓	X	X
Statement 139.7 x 215.9 mm (5.5 x 8.5 in.)	Short-edge feed	✓	✓	X	X
	Long-edge feed	X	X	X	X
Executive 184.2 x 266.7 mm (7.25 x 10.5 in.)	Short-edge feed	✓	✓	X	X
	Long-edge feed	✓	✓	X	X
Letter 215.9 x 279.4 mm (8.5 x 11 in.)	Short-edge feed	✓	✓	X	X
	Long-edge feed	✓	✓	✓	✓
Folio 215.9 x 330.2 mm (8.5 x 13 in.)	Short-edge feed	✓	✓	X	X
Oficio (Mexico) 215.9 x 340.4 mm (8.5 x 13.4 in.)	Short-edge feed	✓	✓	X	X
Legal 215.9 x 355.6 mm (8.5 x 14 in.)	Short-edge feed	✓	✓	X	X
Ledger 279.4 x 431.8 mm (11 x 17 in.)	Short-edge feed	✓	✓	X	X
12x18 304.8 x 457.2 mm (12 x 18 in.)	Short-edge feed	✓	✓	X	X
SRA3 320.04 x 449.58 mm (12.6 x 17.7 in.)	Short-edge feed	✓	✓	X	X
Envelope (Choukei #3) 120 x 235 mm (4.75 x 9.25 in.)	Short-edge feed	X	X	X	X

[1] Supported only when configured from the Universal Setup menu.

[2] Supports paper sizes ranging from 139.7 x 215.9 mm (5.5 x 8.5 in.) to 304.8 x 457.2 mm (12 x 18 in.).

Paper size	Orientation	Optional 550-sheet tray	2 x 550-sheet tray	2000-sheet tandem tray	1500-sheet tray
Hagaki 100 x 148 mm (3.94 x 5.83 in.)	Short-edge feed	✓[1]	✓[1]	X	X
B5 Envelope 176 x 250 mm (6.93 x 9.84 in.)	Short-edge feed	X	X	X	X
Envelope (Commercial #9) 98.4 x 225.4 mm (3.875 x 8.9 in.)	Short-edge feed	✓[1]	✓[1]	X	X
Envelope (Commercial #10) 104.8 x 241.3 mm (4.12 x 9.5 in.)	Short-edge feed	X	X	X	X
Envelope (Monarch 7-3/4) 98.4 x 190.5 mm (3.875 x 7.5 in.)	Short-edge feed	✓	✓	X	X
Envelope (DL) 110 x 220 mm (4.33 x 8.66 in.)	Short-edge feed	✓	✓	X	X
Envelope (ISO C4) 229 x 324 mm (9 x 12.8 in.)	Short-edge feed	X	X	X	X
Envelope (ISO C5) 162 x 229 mm (6.38 x 9 in.)	Short-edge feed	✓	✓	X	X
Universal	N/A	✓[2]	✓[2]	✓	✓

[1] Supported only when configured from the Universal Setup menu.

[2] Supports paper sizes ranging from 139.7 x 215.9 mm (5.5 x 8.5 in.) to 304.8 x 457.2 mm (12 x 18 in.).

Paper sizes supported by the output bins

Note: The paper transport and either of the staple, hole punch finisher or booklet finisher are installed to the printer.

Paper size	Orientation	Paper transport + Staple, hole punch finisher			Paper transport + Booklet finisher			
		Standard bin (Finisher top bin)	Bin 1 (Finisher stapler/punch, offset bin)	Bin 2 (Paper transport bin)	Standard bin (Finisher top bin)	Bin 1 (Finisher stapler/punch, offset bin)	Bin 2 (Finisher booklet bin)	Bin 3 (Paper transport bin)
4x6 Card	Short-edge feed	✓	✓	✓	✓	✓	X	✓
	Long-edge feed	X	X	X	X	X	X	✓
A6 105 x 148 mm (4.13 x 5.83 in.)	Short-edge feed	✓	✓	✓	✓	✓	X	✓
	Long-edge feed	X	X	X	X	X	X	X
1/3 A4	Short-edge feed	✓	✓	✓	✓	✓	X	✓
	Long-edge feed	X	X	X	X	X	X	✓
A5 148 x 210 mm (5.83 x 8.27 in.)	Short-edge feed	✓	✓	✓	✓	✓	X	✓
	Long-edge feed	✓	✓	✓	✓	✓	X	✓
A4 210 x 297 mm (8.27 x 11.7 in.)	Short-edge feed	✓	✓	✓	✓	✓	✓	✓
	Long-edge feed	✓	✓	✓	✓	✓	✓	✓
A3 297 x 420 mm (11.69 x 16.54 in.)	Short-edge feed	✓	✓	✓	✓	✓	✓	✓
JIS B5 182 x 257 mm (7.17 x 10.1 in.)	Short-edge feed	✓	✓	✓	✓	✓	✓	✓
	Long-edge feed	✓	✓	✓	✓	✓	X	✓

[1] Supports paper sizes ranging from 90 x 148 mm (3.55 x 5.83 in.) to 320 x 600 mm (12.59 x 23.62 in.).

[2] Supports paper sizes ranging from 90 x 148 mm (3.55 x 5.83 in.) to 320 x 1260 mm (12.59 x 49.6 in.).

[3] Supports paper sizes ranging from 182 x 257 mm (7.17 x 10.12 in.) to 304.8 x 457.2 mm (12 x 18 in.).

Paper size	Orientation	Paper transport + Staple, hole punch finisher			Paper transport + Booklet finisher			
		Standard bin (Finisher top bin)	Bin 1 (Finisher stapler/punch, offset bin)	Bin 2 (Paper transport bin)	Standard bin (Finisher top bin)	Bin 1 (Finisher stapler/punch, offset bin)	Bin 2 (Finisher booklet bin)	Bin 3 (Paper transport bin)
JIS B4 257 x 364 mm (10.12 x 14.33 in.)	Short-edge feed	✓	✓	✓	✓	✓	✓	✓
Statement 139.7 x 215.9 mm (5.5 x 8.5 in.)	Short-edge feed	✓	✓	✓	✓	✓	X	✓
	Long-edge feed	✓	✓	✓	✓	✓	X	✓
Executive 184.2 x 266.7 mm (7.25 x 10.5 in.)	Short-edge feed	✓	✓	✓	✓	✓	X	✓
	Long-edge feed	✓	✓	✓	✓	✓	X	✓
Letter 215.9 x 279.4 mm (8.5 x 11 in.)	Short-edge feed	✓	✓	✓	✓	✓	✓	✓
	Long-edge feed	✓	✓	✓	✓	✓	X	✓
Folio 215.9 x 330.2 mm (8.5 x 13 in.)	Short-edge feed	✓	✓	✓	✓	✓	✓	✓
Oficio (Mexico) 215.9 x 340.4 mm (8.5 x 13.4 in.)	Short-edge feed	✓	✓	✓	✓	✓	✓	✓
Legal 215.9 x 355.6 mm (8.5 x 14 in.)	Short-edge feed	✓	✓	✓	✓	✓	✓	✓
Ledger 279.4 x 431.8 mm (11 x 17 in.)	Short-edge feed	✓	✓	✓	✓	✓	✓	✓

[1] Supports paper sizes ranging from 90 x 148 mm (3.55 x 5.83 in.) to 320 x 600 mm (12.59 x 23.62 in.).

[2] Supports paper sizes ranging from 90 x 148 mm (3.55 x 5.83 in.) to 320 x 1260 mm (12.59 x 49.6 in.).

[3] Supports paper sizes ranging from 182 x 257 mm (7.17 x 10.12 in.) to 304.8 x 457.2 mm (12 x 18 in.).

Paper size	Orientation	Paper transport + Staple, hole punch finisher			Paper transport + Booklet finisher			
		Standard bin (Finisher top bin)	Bin 1 (Finisher stapler/punch, offset bin)	Bin 2 (Paper transport bin)	Standard bin (Finisher top bin)	Bin 1 (Finisher stapler/punch, offset bin)	Bin 2 (Finisher booklet bin)	Bin 3 (Paper transport bin)
12x18 304.8 x 457.2 mm (12 x 18 in.)	Short-edge feed	✓	✓	✓	✓	✓	✓	✓
SRA3 320.04 x 449.58 mm (12.6 x 17.7 in.)	Short-edge feed	✓	✓	X	✓	✓	X	✓
Envelope (Choukei #3) 120 x 235 mm (4.75 x 9.25 in.)	Short-edge feed	X	X	✓	X	X	X	✓
Hagaki 100 x 148 mm (3.94 x 5.83 in.)	Short-edge feed	X	X	✓	X	X	X	✓
B5 Envelope 176 x 250 mm (6.93 x 9.84 in.)	Short-edge feed	X	X	✓	X	X	X	✓
Envelope (Commercial #9) 98.4 x 225.4 mm (3.875 x 8.9 in.)	Short-edge feed	X	X	✓	X	X	X	✓
Envelope (Commercial #10) 104.8 x 241.3 mm (4.12 x 9.5 in.)	Short-edge feed	X	X	✓	X	X	X	✓

[1] Supports paper sizes ranging from 90 x 148 mm (3.55 x 5.83 in.) to 320 x 600 mm (12.59 x 23.62 in.).

[2] Supports paper sizes ranging from 90 x 148 mm (3.55 x 5.83 in.) to 320 x 1260 mm (12.59 x 49.6 in.).

[3] Supports paper sizes ranging from 182 x 257 mm (7.17 x 10.12 in.) to 304.8 x 457.2 mm (12 x 18 in.).

Paper size	Orientation	Paper transport + Staple, hole punch finisher			Paper transport + Booklet finisher			
		Standard bin (Finisher top bin)	Bin 1 (Finisher stapler/punch, offset bin)	Bin 2 (Paper transport bin)	Standard bin (Finisher top bin)	Bin 1 (Finisher stapler/punch, offset bin)	Bin 2 (Finisher booklet bin)	Bin 3 (Paper transport bin)
Envelope (Monarch 7-3/4) 98.4 x 190.5 mm (3.875 x 7.5 in.)	Short-edge feed	X	X	✓	X	X	X	✓
Envelope (DL) 110 x 220 mm (4.33 x 8.66 in.)	Short-edge feed	X	X	✓	X	X	X	✓
Envelope (ISO C4) 229 x 324 mm (9 x 12.8 in.)	Short-edge feed	X	X	✓	X	X	X	✓
Envelope (ISO C5) 162 x 229 mm (6.38 x 9 in.)	Short-edge feed	X	X	✓	X	X	X	✓
Universal	N/A	✓[1]	✓[1]	✓[2]	✓[1]	✓[1]	✓[3]	✓[2]

[1] Supports paper sizes ranging from 90 x 148 mm (3.55 x 5.83 in.) to 320 x 600 mm (12.59 x 23.62 in.).

[2] Supports paper sizes ranging from 90 x 148 mm (3.55 x 5.83 in.) to 320 x 1260 mm (12.59 x 49.6 in.).

[3] Supports paper sizes ranging from 182 x 257 mm (7.17 x 10.12 in.) to 304.8 x 457.2 mm (12 x 18 in.).

Note: The paper transport with folding option and either of the staple, hole punch finisher or booklet finisher are installed to the printer.

		Paper transport with folding option + Staple, hole punch finisher			Paper transport with folding option + Booklet finisher			
Paper size	**Orientation**	**Standard bin (Finisher top bin)**	**Bin 1 (Finisher stapler/punch, offset bin)**	**Bin 2 (Paper transport bin)**	**Standard bin (Finisher top bin)**	**Bin 1 (Finisher stapler/punch, offset bin)**	**Bin 2 (Finisher booklet bin)**	**Bin 3 (Paper transport bin)**
4x6 Card	Short-edge feed	✓	✓	✓	✓	✓	X	✓
	Long-edge feed	X	X	X	X	X	X	X
A6 105 x 148 mm (4.13 x 5.83 in.)	Short-edge feed	✓	✓	✓	✓	✓	X	✓
	Long-edge feed	X	X	X	X	X	X	X
1/3 A4	Short-edge feed	✓	✓	✓	✓	✓	X	✓
	Long-edge feed	X	X	X	X	X	X	X
A5 148 x 210 mm (5.83 x 8.27 in.)	Short-edge feed	✓	✓	✓	✓	✓	X	✓
	Long-edge feed	✓	✓	✓	✓	✓	X	✓
A4 210 x 297 mm (8.27 x 11.7 in.)	Short-edge feed	✓	✓	✓	✓	✓	✓	✓
	Long-edge feed	✓	✓	✓	✓	✓	X	✓
A3 297 x 420 mm (11.69 x 16.54 in.)	Short-edge feed	✓	✓	✓	✓	✓	✓	✓
JIS B5 182 x 257 mm (7.17 x 10.1 in.)	Short-edge feed	✓	✓	✓	✓	✓	✓	✓
	Long-edge feed	✓	✓	✓	✓	✓	X	✓

[1] Supports paper sizes ranging from 90 x 148 mm (3.55 x 5.83 in.) to 320 x 600 mm (12.59 x 23.62 in.).

[2] Supports paper sizes ranging from 90 x 148 mm (3.55 x 5.83 in.) to 297 x 1260 mm (11.69 x 49.6 in.).

[3] Supports paper sizes ranging from 182 x 257 mm (7.17 x 10.12 in.) to 304.8 x 457.2 mm (12 x 18 in.).

		Paper transport with folding option + Staple, hole punch finisher			Paper transport with folding option + Booklet finisher			
Paper size	**Orientation**	**Standard bin (Finisher top bin)**	**Bin 1 (Finisher stapler/punch, offset bin)**	**Bin 2 (Paper transport bin)**	**Standard bin (Finisher top bin)**	**Bin 1 (Finisher stapler/punch, offset bin)**	**Bin 2 (Finisher booklet bin)**	**Bin 3 (Paper transport bin)**
JIS B4 257 x 364 mm (10.12 x 14.33 in.)	Short-edge feed	✓	✓	✓	✓	✓	✓	✓
Statement 139.7 x 215.9 mm (5.5 x 8.5 in.)	Short-edge feed	✓	✓	✓	✓	✓	X	✓
	Long-edge feed	✓	✓	✓	✓	✓	X	✓
Executive 184.2 x 266.7 mm (7.25 x 10.5 in.)	Short-edge feed	✓	✓	✓	✓	✓	✓	✓
	Long-edge feed	✓	✓	✓	✓	✓	X	✓
Letter 215.9 x 279.4 mm (8.5 x 11 in.)	Short-edge feed	✓	✓	✓	✓	✓	✓	✓
	Long-edge feed	✓	✓	✓	✓	✓	X	✓
Folio 215.9 x 330.2 mm (8.5 x 13 in.)	Short-edge feed	✓	✓	✓	✓	✓	✓	✓
Oficio (Mexico) 215.9 x 340.4 mm (8.5 x 13.4 in.)	Short-edge feed	✓	✓	✓	✓	✓	✓	✓
Legal 215.9 x 355.6 mm (8.5 x 14 in.)	Short-edge feed	✓	✓	✓	✓	✓	✓	✓
Ledger 279.4 x 431.8 mm (11 x 17 in.)	Short-edge feed	✓	✓	✓	✓	✓	✓	✓

[1] Supports paper sizes ranging from 90 x 148 mm (3.55 x 5.83 in.) to 320 x 600 mm (12.59 x 23.62 in.).

[2] Supports paper sizes ranging from 90 x 148 mm (3.55 x 5.83 in.) to 297 x 1260 mm (11.69 x 49.6 in.).

[3] Supports paper sizes ranging from 182 x 257 mm (7.17 x 10.12 in.) to 304.8 x 457.2 mm (12 x 18 in.).

		Paper transport with folding option + Staple, hole punch finisher			Paper transport with folding option + Booklet finisher			
Paper size	**Orientation**	**Standard bin (Finisher top bin)**	**Bin 1 (Finisher stapler/punch, offset bin)**	**Bin 2 (Paper transport bin)**	**Standard bin (Finisher top bin)**	**Bin 1 (Finisher stapler/punch, offset bin)**	**Bin 2 (Finisher booklet bin)**	**Bin 3 (Paper transport bin)**
12x18 304.8 x 457.2 mm (12 x 18 in.)	Short-edge feed	✓	✓	X	✓	✓	✓	X
SRA3 320.04 x 449.58 mm (12.6 x 17.7 in.)	Short-edge feed	✓	✓	X	✓	✓	X	X
Envelope (Choukei #3) 120 x 235 mm (4.75 x 9.25 in.)	Short-edge feed	X	X	✓	X	X	X	✓
Hagaki 100 x 148 mm (3.94 x 5.83 in.)	Short-edge feed	X	X	✓	X	X	X	✓
B5 Envelope 176 x 250 mm (6.93 x 9.84 in.)	Short-edge feed	X	X	✓	X	X	X	✓
Envelope (Commercial #9) 98.4 x 225.4 mm (3.875 x 8.9 in.)	Short-edge feed	X	X	✓	X	X	X	✓
Envelope (Commercial #10) 104.8 x 241.3 mm (4.12 x 9.5 in.)	Short-edge feed	X	X	✓	X	X	X	✓

[1] Supports paper sizes ranging from 90 x 148 mm (3.55 x 5.83 in.) to 320 x 600 mm (12.59 x 23.62 in.).

[2] Supports paper sizes ranging from 90 x 148 mm (3.55 x 5.83 in.) to 297 x 1260 mm (11.69 x 49.6 in.).

[3] Supports paper sizes ranging from 182 x 257 mm (7.17 x 10.12 in.) to 304.8 x 457.2 mm (12 x 18 in.).

		Paper transport with folding option + Staple, hole punch finisher			Paper transport with folding option + Booklet finisher			
Paper size	**Orientation**	**Standard bin (Finisher top bin)**	**Bin 1 (Finisher stapler/punch, offset bin)**	**Bin 2 (Paper transport bin)**	**Standard bin (Finisher top bin)**	**Bin 1 (Finisher stapler/punch, offset bin)**	**Bin 2 (Finisher booklet bin)**	**Bin 3 (Paper transport bin)**
Envelope (Monarch 7-3/4) 98.4 x 190.5 mm (3.875 x 7.5 in.)	Short-edge feed	X	X	✓	X	X	X	✓
Envelope (DL) 110 x 220 mm (4.33 x 8.66 in.)	Short-edge feed	X	X	✓	X	X	X	✓
Envelope (ISO C4) 229 x 324 mm (9 x 12.8 in.)	Short-edge feed	X	X	✓	X	X	X	✓
Envelope (ISO C5) 162 x 229 mm (6.38 x 9 in.)	Short-edge feed	X	X	✓	X	X	X	✓
Universal	N/A	✓[1]	✓[1]	✓[2]	✓[1]	✓[1]	✓[3]	✓[2]

[1] Supports paper sizes ranging from 90 x 148 mm (3.55 x 5.83 in.) to 320 x 600 mm (12.59 x 23.62 in.).

[2] Supports paper sizes ranging from 90 x 148 mm (3.55 x 5.83 in.) to 297 x 1260 mm (11.69 x 49.6 in.).

[3] Supports paper sizes ranging from 182 x 257 mm (7.17 x 10.12 in.) to 304.8 x 457.2 mm (12 x 18 in.).

Paper sizes supported for staple and punch jobs

Paper sizes supported by the staple finisher

Paper size	Orientation	Staple		
		Single	**Dual**	**Dual Left**
4x6 Card	Short-edge feed	X	X	X
	Long-edge feed	X	X	X
A6 105 x 148 mm (4.13 x 5.83 in.)	Short-edge feed	X	X	X
	Long-edge feed	X	X	X

Paper size	Orientation	Staple		
		Single	Dual	Dual Left
1/3 A4	Short-edge feed	X	X	X
	Long-edge feed	X	X	X
A5 148 x 210 mm (5.83 x 8.27 in.)	Short-edge feed	X	X	X
	Long-edge feed	X	X	X
A4 210 x 297 mm (8.27 x 11.7 in.)	Short-edge feed	✓	✓	✓
	Long-edge feed	✓	✓	✓
A3 297 x 420 mm (11.69 x 16.54 in.)	Short-edge feed	✓	✓	✓
JIS B5 182 x 257 mm (7.17 x 10.1 in.)	Short-edge feed	✓	✓	✓
	Long-edge feed	✓	✓	✓
JIS B4 257 x 364 mm (10.12 x 14.33 in.)	Short-edge feed	✓	✓	✓
Statement 139.7 x 215.9 mm (5.5 x 8.5 in.)	Short-edge feed	X	X	X
	Long-edge feed	X	X	X
Executive 184.2 x 266.7 mm (7.25 x 10.5 in.)	Short-edge feed	✓	X	X
	Long-edge feed	✓	✓	✓
Letter 215.9 x 279.4 mm (8.5 x 11 in.)	Short-edge feed	✓	✓	X
	Long-edge feed	✓	✓	X
Folio 215.9 x 330.2 mm (8.5 x 13 in.)	Short-edge feed	✓	✓	X
Oficio (Mexico) 215.9 x 340.4 mm (8.5 x 13.4 in.)	Short-edge feed	✓	✓	X
Legal 215.9 x 355.6 mm (8.5 x 14 in.)	Short-edge feed	✓	✓	✓
Ledger 279.4 x 431.8 mm (11 x 17 in.)	Short-edge feed	✓	✓	✓

Paper size	Orientation	Staple		
		Single	Dual	Dual Left
12x18 304.8 x 457.2 mm (12 x 18 in.)	Short-edge feed	X	X	X
SRA3 320.04 x 449.58 mm (12.6 x 17.7 in.)	Short-edge feed	X	X	X
Envelope (Choukei #3) 120 x 235 mm (4.75 x 9.25 in.)	Short-edge feed	X	X	X
Hagaki 100 x 148 mm (3.94 x 5.83 in.)	Short-edge feed	X	X	X
B5 Envelope 176 x 250 mm (6.93 x 9.84 in.)	Short-edge feed	X	X	X
Envelope (Commercial #9) 98.4 x 225.4 mm (3.875 x 8.9 in.)	Short-edge feed	X	X	X
Envelope (Commercial #10) 104.8 x 241.3 mm (4.12 x 9.5 in.)	Short-edge feed	X	X	X
Envelope (Monarch 7-3/4) 98.4 x 190.5 mm (3.875 x 7.5 in.)	Short-edge feed	X	X	X
Envelope (DL) 110 x 220 mm (4.33 x 8.66 in.)	Short-edge feed	X	X	X
Envelope (ISO C4) 229 x 324 mm (9 x 12.8 in.)	Short-edge feed	X	X	X
Envelope (ISO C5) 162 x 229 mm (6.38 x 9 in.)	Short-edge feed	X	X	X

Paper sizes supported by the staple, hole punch finisher

Paper size	Orientation	Staple			Hole punch		
		Single	Dual	Dual Left	Two-hole	Three-hole	Four-hole
4x6 Card	Short-edge feed	X	X	X	X	X	X
	Long-edge feed	X	X	X	X	X	X
A6 105 x 148 mm (4.13 x 5.83 in.)	Short-edge feed	X	X	X	X	X	X
	Long-edge feed	X	X	X	X	X	X
1/3 A4	Short-edge feed	X	X	X	X	X	X
	Long-edge feed	X	X	X	X	X	X
A5 148 x 210 mm (5.83 x 8.27 in.)	Short-edge feed	X	X	X	✓	X	X
	Long-edge feed	X	X	X	✓	X	X
A4 210 x 297 mm (8.27 x 11.7 in.)	Short-edge feed	✓	✓	✓	✓	X	X
	Long-edge feed	✓	✓	✓	✓	✓	✓
A3 297 x 420 mm (11.69 x 16.54 in.)	Short-edge feed	✓	✓	✓	✓	✓	✓
JIS B5 182 x 257 mm (7.17 x 10.1 in.)	Short-edge feed	✓	✓	✓	✓	X	X
	Long-edge feed	✓	✓	✓	✓	✓	✓
JIS B4 257 x 364 mm (10.12 x 14.33 in.)	Short-edge feed	✓	✓	X	✓	✓	✓
Statement 139.7 x 215.9 mm (5.5 x 8.5 in.)	Short-edge feed	X	X	X	✓	X	X
	Long-edge feed	X	X	X	✓	X	X

Paper size	Orientation	Staple			Hole punch		
		Single	Dual	Dual Left	Two-hole	Three-hole	Four-hole
Executive 184.2 x 266.7 mm (7.25 x 10.5 in.)	Short-edge feed	✓	✓	✓	✓	X	X
	Long-edge feed	✓	✓	✓	✓	✓	✓
Letter 215.9 x 279.4 mm (8.5 x 11 in.)	Short-edge feed	✓	✓	✓	✓	X	X
	Long-edge feed	✓	✓	✓	✓	✓	✓
Folio 215.9 x 330.2 mm (8.5 x 13 in.)	Short-edge feed	✓	✓	✓	✓	X	X
Oficio (Mexico) 215.9 x 340.4 mm (8.5 x 13.4 in.)	Short-edge feed	✓	✓	✓	✓	X	X
Legal 215.9 x 355.6 mm (8.5 x 14 in.)	Short-edge feed	✓	✓	✓	✓	X	X
Ledger 279.4 x 431.8 mm (11 x 17 in.)	Short-edge feed	✓	✓	✓	✓	✓	✓
12x18 304.8 x 457.2 mm (12 x 18 in.)	Short-edge feed	X	X	X	X	X	X
SRA3 320.04 x 449.58 mm (12.6 x 17.7 in.)	Short-edge feed	X	X	X	X	X	X
Envelope (Choukei #3) 120 x 235 mm (4.75 x 9.25 in.)	Short-edge feed	X	X	X	X	X	X

Paper size	Orientation	Staple			Hole punch		
		Single	Dual	Dual Left	Two-hole	Three-hole	Four-hole
Hagaki 100 x 148 mm (3.94 x 5.83 in.)	Short-edge feed	X	X	X	X	X	X
B5 Envelope 176 x 250 mm (6.93 x 9.84 in.)	Short-edge feed	X	X	X	X	X	X
Envelope (Commercial #9) 98.4 x 225.4 mm (3.875 x 8.9 in.)	Short-edge feed	X	X	X	X	X	X
Envelope (Commercial #10) 104.8 x 241.3 mm (4.12 x 9.5 in.)	Short-edge feed	X	X	X	X	X	X
Envelope (Monarch 7-3/4) 98.4 x 190.5 mm (3.875 x 7.5 in.)	Short-edge feed	X	X	X	X	X	X
Envelope (DL) 110 x 220 mm (4.33 x 8.66 in.)	Short-edge feed	X	X	X	X	X	X
Envelope (ISO C4) 229 x 324 mm (9 x 12.8 in.)	Short-edge feed	X	X	X	X	X	X

Paper size	Orientation	Staple			Hole punch		
		Single	Dual	Dual Left	Two-hole	Three-hole	Four-hole
Envelope (ISO C5) 162 x 229 mm (6.38 x 9 in.)	Short-edge feed	X	X	X	X	X	X

Paper sizes supported by the booklet finisher

Paper size	Orientation	Staple			Hole punch		
		Single	Dual	Dual Left	Two-hole	Three-hole	Four-hole
4x6 Card	Short-edge feed	X	X	X	X	X	X
	Long-edge feed	X	X	X	X	X	X
A6 105 x 148 mm (4.13 x 5.83 in.)	Short-edge feed	X	X	X	X	X	X
	Long-edge feed	X	X	X	X	X	X
1/3 A4	Short-edge feed	X	X	X	X	X	X
	Long-edge feed	X	X	X	X	X	X
A5 148 x 210 mm (5.83 x 8.27 in.)	Short-edge feed	X	X	X	✓	X	X
	Long-edge feed	X	X	X	✓	X	X
A4 210 x 297 mm (8.27 x 11.7 in.)	Short-edge feed	✓	✓	✓	✓	X	X
	Long-edge feed	✓	✓	✓	✓	✓	✓
A3 297 x 420 mm (11.69 x 16.54 in.)	Short-edge feed	✓	✓	✓	✓	✓	✓
JIS B5 182 x 257 mm (7.17 x 10.1 in.)	Short-edge feed	✓	✓	✓	X	X	X
	Long-edge feed	✓	✓	✓	✓	X	X

Paper size	Orientation	Staple			Hole punch		
		Single	Dual	Dual Left	Two-hole	Three-hole	Four-hole
JIS B4 257 x 364 mm (10.12 x 14.33 in.)	Short-edge feed	✓	✓	X	✓	✓	✓
Statement 139.7 x 215.9 mm (5.5 x 8.5 in.)	Short-edge feed	X	X	X	✓	X	X
	Long-edge feed	X	X	X	✓	X	X
Executive 184.2 x 266.7 mm (7.25 x 10.5 in.)	Short-edge feed	✓	✓	✓	✓	X	X
	Long-edge feed	✓	✓	✓	✓	✓	✓
Letter 215.9 x 279.4 mm (8.5 x 11 in.)	Short-edge feed	✓	✓	✓	✓	X	X
	Long-edge feed	✓	✓	✓	✓	✓	✓
Folio 215.9 x 330.2 mm (8.5 x 13 in.)	Short-edge feed	✓	✓	✓	✓	X	X
Oficio (Mexico) 215.9 x 340.4 mm (8.5 x 13.4 in.)	Short-edge feed	✓	✓	✓	✓	X	X
Legal 215.9 x 355.6 mm (8.5 x 14 in.)	Short-edge feed	✓	✓	✓	✓	X	X
Ledger 279.4 x 431.8 mm (11 x 17 in.)	Short-edge feed	✓	✓	✓	✓	✓	✓
12x18 304.8 x 457.2 mm (12 x 18 in.)	Short-edge feed	X	X	X	X	X	X

Paper size	Orientation	Staple			Hole punch		
		Single	Dual	Dual Left	Two-hole	Three-hole	Four-hole
SRA3 320.04 x 449.58 mm (12.6 x 17.7 in.)	Short-edge feed	X	X	X	X	X	X
Envelope (Choukei #3) 120 x 235 mm (4.75 x 9.25 in.)	Short-edge feed	X	X	X	X	X	X
Hagaki 100 x 148 mm (3.94 x 5.83 in.)	Short-edge feed	X	X	X	X	X	X
B5 Envelope 176 x 250 mm (6.93 x 9.84 in.)	Short-edge feed	X	X	X	X	X	X
Envelope (Commercial #9) 98.4 x 225.4 mm (3.875 x 8.9 in.)	Short-edge feed	X	X	X	X	X	X
Envelope (Commercial #10) 104.8 x 241.3 mm (4.12 x 9.5 in.)	Short-edge feed	X	X	X	X	X	X
Envelope (Monarch 7-3/4) 98.4 x 190.5 mm (3.875 x 7.5 in.)	Short-edge feed	X	X	X	X	X	X

Paper size	Orientation	Staple			Hole punch		
		Single	Dual	Dual Left	Two-hole	Three-hole	Four-hole
Envelope (DL) 110 x 220 mm (4.33 x 8.66 in.)	Short-edge feed	X	X	X	X	X	X
Envelope (ISO C4) 229 x 324 mm (9 x 12.8 in.)	Short-edge feed	X	X	X	X	X	X
Envelope (ISO C5) 162 x 229 mm (6.38 x 9 in.)	Short-edge feed	X	X	X	X	X	X

Paper sizes supported for fold jobs

Paper sizes supported by the paper transport with folding option

Paper size	Orientation	Paper transport with folding option only			
		C-fold	Z-fold	Z-fold half sheet	V-fold
		Standard bin	Standard bin	Standard bin	Standard bin
4x6 Card	Short-edge feed	X	X	X	X
	Long-edge feed	X	X	X	X
A6 105 x 148 mm (4.13 x 5.83 in.)	Short-edge feed	X	X	X	X
	Long-edge feed	X	X	X	X
1/3 A4	Short-edge feed	X	X	X	X
	Long-edge feed	X	X	X	X
A5 148 x 210 mm (5.83 x 8.27 in.)	Short-edge feed	X	X	X	X
	Long-edge feed	X	X	X	X
A4 210 x 297 mm (8.27 x 11.7 in.)	Short-edge feed	✓	✓	✓	✓
	Long-edge feed	X	X	X	X
A3 297 x 420 mm (11.69 x 16.54 in.)	Short-edge feed	✓	✓	✓	✓

Paper size	Orientation	Paper transport with folding option only			
		C-fold	Z-fold	Z-fold half sheet	V-fold
		Standard bin	Standard bin	Standard bin	Standard bin
JIS B5 182 x 257 mm (7.17 x 10.1 in.)	Short-edge feed	X	X	X	X
	Long-edge feed	X	X	X	X
JIS B4 257 x 364 mm (10.12 x 14.33 in.)	Short-edge feed	X	X	✓	✓
Statement 139.7 x 215.9 mm (5.5 x 8.5 in.)	Short-edge feed	X	X	X	X
	Long-edge feed	X	X	X	X
Executive 184.2 x 266.7 mm (7.25 x 10.5 in.)	Short-edge feed	X	X	X	X
	Long-edge feed	X	X	X	X
Letter 215.9 x 279.4 mm (8.5 x 11 in.)	Short-edge feed	✓	✓	✓	✓
	Long-edge feed	X	X	X	X
Folio 215.9 x 330.2 mm (8.5 x 13 in.)	Short-edge feed	X	X	X	X
Oficio (Mexico) 215.9 x 340.4 mm (8.5 x 13.4 in.)	Short-edge feed	✓	✓	✓	✓
Legal 215.9 x 355.6 mm (8.5 x 14 in.)	Short-edge feed	✓	✓	✓	✓
Ledger 279.4 x 431.8 mm (11 x 17 in.)	Short-edge feed	✓	✓	✓	✓
12x18 304.8 x 457.2 mm (12 x 18 in.)	Short-edge feed	X	X	X	X
SRA3 320.04 x 449.58 mm (12.6 x 17.7 in.)	Short-edge feed	X	X	X	X
Envelope (Choukei #3) 120 x 235 mm (4.75 x 9.25 in.)	Short-edge feed	X	X	X	X

Paper size	Orientation	Paper transport with folding option only			
		C-fold	Z-fold	Z-fold half sheet	V-fold
		Standard bin	Standard bin	Standard bin	Standard bin
Hagaki 100 x 148 mm (3.94 x 5.83 in.)	Short-edge feed	X	X	X	X
B5 Envelope 176 x 250 mm (6.93 x 9.84 in.)	Short-edge feed	X	X	X	X
Envelope (Commercial #9) 98.4 x 225.4 mm (3.875 x 8.9 in.)	Short-edge feed	X	X	X	X
Envelope (Commercial #10) 104.8 x 241.3 mm (4.12 x 9.5 in.)	Short-edge feed	X	X	X	X
Envelope (Monarch 7-3/4) 98.4 x 190.5 mm (3.875 x 7.5 in.)	Short-edge feed	X	X	X	X
Envelope (DL) 110 x 220 mm (4.33 x 8.66 in.)	Short-edge feed	X	X	X	X
Envelope (ISO C4) 229 x 324 mm (9 x 12.8 in.)	Short-edge feed	X	X	X	X
Envelope (ISO C5) 162 x 229 mm (6.38 x 9 in.)	Short-edge feed	X	X	X	X

Paper sizes supported by the paper transport and booklet finisher

Paper size	Orientation	Paper transport + Booklet finisher	
		V-fold multiple	V-fold
		Bin 2	Standard bin, bin 1, bin 2
4x6 Card	Short-edge feed	X	X
	Long-edge feed	X	X
A6 105 x 148 mm (4.13 x 5.83 in.)	Short-edge feed	X	X
	Long-edge feed	X	X
1/3 A4	Short-edge feed	X	X
	Long-edge feed	X	X

Paper size	Orientation	Paper transport + Booklet finisher	
		V-fold multiple	V-fold
		Bin 2	Standard bin, bin 1, bin 2
A5 148 x 210 mm (5.83 x 8.27 in.)	Short-edge feed	X	X
	Long-edge feed	X	X
A4 210 x 297 mm (8.27 x 11.7 in.)	Short-edge feed	✓	✓
	Long-edge feed	X	X
A3 297 x 420 mm (11.69 x 16.54 in.)	Short-edge feed	✓	✓
JIS B5 182 x 257 mm (7.17 x 10.1 in.)	Short-edge feed	✓	✓
	Long-edge feed	X	X
JIS B4 257 x 364 mm (10.12 x 14.33 in.)	Short-edge feed	✓	✓
Statement 139.7 x 215.9 mm (5.5 x 8.5 in.)	Short-edge feed	X	X
	Long-edge feed	X	X
Executive 184.2 x 266.7 mm (7.25 x 10.5 in.)	Short-edge feed	X	X
	Long-edge feed	X	X
Letter 215.9 x 279.4 mm (8.5 x 11 in.)	Short-edge feed	✓	✓
	Long-edge feed	X	X
Folio 215.9 x 330.2 mm (8.5 x 13 in.)	Short-edge feed	✓	✓
Oficio (Mexico) 215.9 x 340.4 mm (8.5 x 13.4 in.)	Short-edge feed	✓	✓
Legal 215.9 x 355.6 mm (8.5 x 14 in.)	Short-edge feed	✓	✓
Ledger 279.4 x 431.8 mm (11 x 17 in.)	Short-edge feed	✓	✓

Paper size	Orientation	Paper transport + Booklet finisher	
		V-fold multiple	V-fold
		Bin 2	Standard bin, bin 1, bin 2
12x18 304.8 x 457.2 mm (12 x 18 in.)	Short-edge feed	✓	✓
SRA3 320.04 x 449.58 mm (12.6 x 17.7 in.)	Short-edge feed	✓	✓
Envelope (Choukei #3) 120 x 235 mm (4.75 x 9.25 in.)	Short-edge feed	X	X
Hagaki 100 x 148 mm (3.94 x 5.83 in.)	Short-edge feed	X	X
B5 Envelope 176 x 250 mm (6.93 x 9.84 in.)	Short-edge feed	X	X
Envelope (Commercial #9) 98.4 x 225.4 mm (3.875 x 8.9 in.)	Short-edge feed	X	X
Envelope (Commercial #10) 104.8 x 241.3 mm (4.12 x 9.5 in.)	Short-edge feed	X	X
Envelope (Monarch 7-3/4) 98.4 x 190.5 mm (3.875 x 7.5 in.)	Short-edge feed	X	X
Envelope (DL) 110 x 220 mm (4.33 x 8.66 in.)	Short-edge feed	X	X
Envelope (ISO C4) 229 x 324 mm (9 x 12.8 in.)	Short-edge feed	X	X
Envelope (ISO C5) 162 x 229 mm (6.38 x 9 in.)	Short-edge feed	X	X

Paper sizes supported by the paper transport with folding option and staple, hole punch finisher

Paper size	Orientation	Paper transport with folding option + Staple, hole punch finisher			
		C-fold	Z-fold	Z-fold half sheet	V-fold
		Bin 2	Bin 2	Standard bin, bin 2	Standard bin, bin 2
4x6 Card	Short-edge feed	X	X	X	X
	Long-edge feed	X	X	X	X
A6 105 x 148 mm (4.13 x 5.83 in.)	Short-edge feed	X	X	X	X
	Long-edge feed	X	X	X	X
1/3 A4	Short-edge feed	X	X	X	X
	Long-edge feed	X	X	X	X
A5 148 x 210 mm (5.83 x 8.27 in.)	Short-edge feed	X	X	X	X
	Long-edge feed	X	X	X	X
A4 210 x 297 mm (8.27 x 11.7 in.)	Short-edge feed	✓	✓	✓	✓
	Long-edge feed	X	X	X	X
A3 297 x 420 mm (11.69 x 16.54 in.)	Short-edge feed	✓	✓	✓	✓
JIS B5 182 x 257 mm (7.17 x 10.1 in.)	Short-edge feed	X	X	X	X
	Long-edge feed	X	X	X	X
JIS B4 257 x 364 mm (10.12 x 14.33 in.)	Short-edge feed	X	X	✓	✓
Statement 139.7 x 215.9 mm (5.5 x 8.5 in.)	Short-edge feed	X	X	X	X
	Long-edge feed	X	X	X	X
Executive 184.2 x 266.7 mm (7.25 x 10.5 in.)	Short-edge feed	X	X	X	X
	Long-edge feed	X	X	X	X
Letter 215.9 x 279.4 mm (8.5 x 11 in.)	Short-edge feed	✓	✓	✓	✓
	Long-edge feed	X	X	X	X
Folio 215.9 x 330.2 mm (8.5 x 13 in.)	Short-edge feed	X	X	X	X

Paper size	Orientation	Paper transport with folding option + Staple, hole punch finisher			
		C-fold	Z-fold	Z-fold half sheet	V-fold
		Bin 2	Bin 2	Standard bin, bin 2	Standard bin, bin 2
Oficio (Mexico) 215.9 x 340.4 mm (8.5 x 13.4 in.)	Short-edge feed	✓	✓	✓	✓
Legal 215.9 x 355.6 mm (8.5 x 14 in.)	Short-edge feed	✓	✓	✓	✓
Ledger 279.4 x 431.8 mm (11 x 17 in.)	Short-edge feed	✓	✓	✓	✓
12x18 304.8 x 457.2 mm (12 x 18 in.)	Short-edge feed	X	X	X	✓
SRA3 320.04 x 449.58 mm (12.6 x 17.7 in.)	Short-edge feed	X	X	X	✓
Envelope (Choukei #3) 120 x 235 mm (4.75 x 9.25 in.)	Short-edge feed	X	X	X	X
Hagaki 100 x 148 mm (3.94 x 5.83 in.)	Short-edge feed	X	X	X	X
B5 Envelope 176 x 250 mm (6.93 x 9.84 in.)	Short-edge feed	X	X	X	X
Envelope (Commercial #9) 98.4 x 225.4 mm (3.875 x 8.9 in.)	Short-edge feed	X	X	X	X
Envelope (Commercial #10) 104.8 x 241.3 mm (4.12 x 9.5 in.)	Short-edge feed	X	X	X	X
Envelope (Monarch 7-3/4) 98.4 x 190.5 mm (3.875 x 7.5 in.)	Short-edge feed	X	X	X	X
Envelope (DL) 110 x 220 mm (4.33 x 8.66 in.)	Short-edge feed	X	X	X	X

Paper size	Orientation	Paper transport with folding option + Staple, hole punch finisher			
		C-fold	Z-fold	Z-fold half sheet	V-fold
		Bin 2	Bin 2	Standard bin, bin 2	Standard bin, bin 2
Envelope (ISO C4) 229 x 324 mm (9 x 12.8 in.)	Short-edge feed	X	X	X	X
Envelope (ISO C5) 162 x 229 mm (6.38 x 9 in.)	Short-edge feed	X	X	X	X

Paper sizes supported by the paper transport with folding option and booklet finisher

Paper size	Orientation	Paper transport with folding option + Booklet finisher				
		C-fold	Z-fold	Z-fold half sheet	V-fold multiple	V-fold
		Bin 3	Bin 3	Standard bin, bin 1, bin 3	Bin 2	Standard bin, bin 1, bin 2, bin 3
4x6 Card	Short-edge feed	X	X	X	X	X
	Long-edge feed	X	X	X	X	X
A6 105 x 148 mm (4.13 x 5.83 in.)	Short-edge feed	X	X	X	X	X
	Long-edge feed	X	X	X	X	X
1/3 A4	Short-edge feed	X	X	X	X	X
	Long-edge feed	X	X	X	X	X
A5 148 x 210 mm (5.83 x 8.27 in.)	Short-edge feed	X	X	X	X	X
	Long-edge feed	X	X	X	X	X
A4 210 x 297 mm (8.27 x 11.7 in.)	Short-edge feed	✓	✓	✓	✓	✓
	Long-edge feed	X	X	X	X	X
A3 297 x 420 mm (11.69 x 16.54 in.)	Short-edge feed	✓	✓	✓	✓	✓
JIS B5 182 x 257 mm (7.17 x 10.1 in.)	Short-edge feed	X	X	X	✓	✓
	Long-edge feed	X	X	X	X	X
JIS B4 257 x 364 mm (10.12 x 14.33 in.)	Short-edge feed	X	X	✓	✓	✓

Paper size	Orientation	Paper transport with folding option + Booklet finisher				
		C-fold	Z-fold	Z-fold half sheet	V-fold multiple	V-fold
		Bin 3	Bin 3	Standard bin, bin 1, bin 3	Bin 2	Standard bin, bin 1, bin 2, bin 3
Statement 139.7 x 215.9 mm (5.5 x 8.5 in.)	Short-edge feed	X	X	X	X	X
	Long-edge feed	X	X	X	X	X
Executive 184.2 x 266.7 mm (7.25 x 10.5 in.)	Short-edge feed	X	X	X	X	X
	Long-edge feed	X	X	X	X	X
Letter 215.9 x 279.4 mm (8.5 x 11 in.)	Short-edge feed	✓	✓	✓	✓	✓
	Long-edge feed	X	X	X	X	X
Folio 215.9 x 330.2 mm (8.5 x 13 in.)	Short-edge feed	X	X	X	✓	✓
Oficio (Mexico) 215.9 x 340.4 mm (8.5 x 13.4 in.)	Short-edge feed	✓	✓	✓	✓	✓
Legal 215.9 x 355.6 mm (8.5 x 14 in.)	Short-edge feed	✓	✓	✓	✓	✓
Ledger 279.4 x 431.8 mm (11 x 17 in.)	Short-edge feed	✓	✓	✓	✓	✓
12x18 304.8 x 457.2 mm (12 x 18 in.)	Short-edge feed	X	X	X	X	✓
SRA3 320.04 x 449.58 mm (12.6 x 17.7 in.)	Short-edge feed	X	X	X	X	✓
Envelope (Choukei #3) 120 x 235 mm (4.75 x 9.25 in.)	Short-edge feed	X	X	X	X	X
Hagaki 100 x 148 mm (3.94 x 5.83 in.)	Short-edge feed	X	X	X	X	X

Paper size	Orientation	Paper transport with folding option + Booklet finisher				
		C-fold	Z-fold	Z-fold half sheet	V-fold multiple	V-fold
		Bin 3	Bin 3	Standard bin, bin 1, bin 3	Bin 2	Standard bin, bin 1, bin 2, bin 3
B5 Envelope 176 x 250 mm (6.93 x 9.84 in.)	Short-edge feed	X	X	X	X	X
Envelope (Commercial #9) 98.4 x 225.4 mm (3.875 x 8.9 in.)	Short-edge feed	X	X	X	X	X
Envelope (Commercial #10) 104.8 x 241.3 mm (4.12 x 9.5 in.)	Short-edge feed	X	X	X	X	X
Envelope (Monarch 7-3/4) 98.4 x 190.5 mm (3.875 x 7.5 in.)	Short-edge feed	X	X	X	X	X
Envelope (DL) 110 x 220 mm (4.33 x 8.66 in.)	Short-edge feed	X	X	X	X	X
Envelope (ISO C4) 229 x 324 mm (9 x 12.8 in.)	Short-edge feed	X	X	X	X	X
Envelope (ISO C5) 162 x 229 mm (6.38 x 9 in.)	Short-edge feed	X	X	X	X	X

Paper sizes supported for offset stacking jobs

Paper sizes supported by the offset stacker or staple finisher

Paper size	Orientation	Offset stacker	Staple finisher
4x6 Card	Short-edge feed	X	X
	Long-edge feed	X	X
A6 105 x 148 mm (4.13 x 5.83 in.)	Short-edge feed	X	X
	Long-edge feed	X	X

[1] Supports paper sizes ranging from 90 x 148 mm (3.55 x 5.83 in.) to 320 x 600 mm (12.59 x 23.62 in.).

[2] Supports paper sizes ranging from 148 x 148 mm (5.83 x 5.83 in.) to 297 x 431.8 mm (11.69 x 17 in.).

Paper size	Orientation	Offset stacker	Staple finisher
1/3 A4	Short-edge feed	X	X
	Long-edge feed	X	X
A5 148 x 210 mm (5.83 x 8.27 in.)	Short-edge feed	✓	✓
	Long-edge feed	✓	✓
A4 210 x 297 mm (8.27 x 11.7 in.)	Short-edge feed	✓	✓
	Long-edge feed	✓	✓
A3 297 x 420 mm (11.69 x 16.54 in.)	Short-edge feed	✓	✓
JIS B5 182 x 257 mm (7.17 x 10.1 in.)	Short-edge feed	✓	✓
	Long-edge feed	✓	✓
JIS B4 257 x 364 mm (10.12 x 14.33 in.)	Short-edge feed	✓	✓
Statement 139.7 x 215.9 mm (5.5 x 8.5 in.)	Short-edge feed	✓	X
	Long-edge feed	✓	X
Executive 184.2 x 266.7 mm (7.25 x 10.5 in.)	Short-edge feed	✓	✓
	Long-edge feed	✓	✓
Letter 215.9 x 279.4 mm (8.5 x 11 in.)	Short-edge feed	✓	✓
	Long-edge feed	✓	✓
Folio 215.9 x 330.2 mm (8.5 x 13 in.)	Short-edge feed	✓	✓
Oficio (Mexico) 215.9 x 340.4 mm (8.5 x 13.4 in.)	Short-edge feed	✓	✓
Legal 215.9 x 355.6 mm (8.5 x 14 in.)	Short-edge feed	✓	✓

[1] Supports paper sizes ranging from 90 x 148 mm (3.55 x 5.83 in.) to 320 x 600 mm (12.59 x 23.62 in.).

[2] Supports paper sizes ranging from 148 x 148 mm (5.83 x 5.83 in.) to 297 x 431.8 mm (11.69 x 17 in.).

Paper size	Orientation	Offset stacker	Staple finisher
Ledger 279.4 x 431.8 mm (11 x 17 in.)	Short-edge feed	✓	✓
12x18 304.8 x 457.2 mm (12 x 18 in.)	Short-edge feed	X	X
SRA3 320.04 x 449.58 mm (12.6 x 17.7 in.)	Short-edge feed	X	X
Envelope (Choukei #3) 120 x 235 mm (4.75 x 9.25 in.)	Short-edge feed	✓	X
Hagaki 100 x 148 mm (3.94 x 5.83 in.)	Short-edge feed	✓	X
B5 Envelope 176 x 250 mm (6.93 x 9.84 in.)	Short-edge feed	✓	X
Envelope (Commercial #9) 98.4 x 225.4 mm (3.875 x 8.9 in.)	Short-edge feed	✓	X
Envelope (Commercial #10) 104.8 x 241.3 mm (4.12 x 9.5 in.)	Short-edge feed	✓	X
Envelope (Monarch 7-3/4) 98.4 x 190.5 mm (3.875 x 7.5 in.)	Short-edge feed	✓	X
Envelope (DL) 110 x 220 mm (4.33 x 8.66 in.)	Short-edge feed	✓	X
Envelope (ISO C4) 229 x 324 mm (9 x 12.8 in.)	Short-edge feed	✓	X
Envelope (ISO C5) 162 x 229 mm (6.38 x 9 in.)	Short-edge feed	✓	X
Universal	N/A	✓[1]	✓[2]

[1] Supports paper sizes ranging from 90 x 148 mm (3.55 x 5.83 in.) to 320 x 600 mm (12.59 x 23.62 in.).

[2] Supports paper sizes ranging from 148 x 148 mm (5.83 x 5.83 in.) to 297 x 431.8 mm (11.69 x 17 in.).

Paper sizes supported by the output bins

Paper size	Orientation	Paper transport + Staple, hole punch finisher	Paper transport + Booklet finisher
		Bin 1	Bin 1
4x6 Card	Short-edge feed	X	X
	Long-edge feed	X	X
A6 105 x 148 mm (4.13 x 5.83 in.)	Short-edge feed	X	X
	Long-edge feed	X	X
1/3 A4	Short-edge feed	X	X
	Long-edge feed	X	X
A5 148 x 210 mm (5.83 x 8.27 in.)	Short-edge feed	✓	✓
	Long-edge feed	✓	✓
A4 210 x 297 mm (8.27 x 11.7 in.)	Short-edge feed	✓	✓
	Long-edge feed	✓	✓
A3 297 x 420 mm (11.69 x 16.54 in.)	Short-edge feed	✓	✓
JIS B5 182 x 257 mm (7.17 x 10.1 in.)	Short-edge feed	✓	✓
	Long-edge feed	✓	✓
JIS B4 257 x 364 mm (10.12 x 14.33 in.)	Short-edge feed	✓	✓
Statement 139.7 x 215.9 mm (5.5 x 8.5 in.)	Short-edge feed	✓	✓
	Long-edge feed	✓	✓
Executive 184.2 x 266.7 mm (7.25 x 10.5 in.)	Short-edge feed	✓	✓
	Long-edge feed	✓	✓
Letter 215.9 x 279.4 mm (8.5 x 11 in.)	Short-edge feed	✓	✓
	Long-edge feed	✓	✓
Folio 215.9 x 330.2 mm (8.5 x 13 in.)	Short-edge feed	✓	✓

[1] Supports paper sizes ranging from 139.7 x 148 mm (5.5 x 5.83 in.) to 304.8 x 600 mm (12 x 23.62 in.).

[2] Supports paper sizes ranging from 125 x 148 mm (4.93 x 5.83 in.) to 304.8 x 457.2 mm (12 x 18 in.).

Paper size	Orientation	Paper transport + Staple, hole punch finisher	Paper transport + Booklet finisher
		Bin 1	Bin 1
Oficio (Mexico) 215.9 x 340.4 mm (8.5 x 13.4 in.)	Short-edge feed	✓	✓
Legal 215.9 x 355.6 mm (8.5 x 14 in.)	Short-edge feed	✓	✓
Ledger 279.4 x 431.8 mm (11 x 17 in.)	Short-edge feed	✓	✓
12x18 304.8 x 457.2 mm (12 x 18 in.)	Short-edge feed	✓	✓
SRA3 320.04 x 449.58 mm (12.6 x 17.7 in.)	Short-edge feed	X	X
Envelope (Choukei #3) 120 x 235 mm (4.75 x 9.25 in.)	Short-edge feed	X	X
Hagaki 100 x 148 mm (3.94 x 5.83 in.)	Short-edge feed	X	X
B5 Envelope 176 x 250 mm (6.93 x 9.84 in.)	Short-edge feed	X	X
Envelope (Commercial #9) 98.4 x 225.4 mm (3.875 x 8.9 in.)	Short-edge feed	X	X
Envelope (Commercial #10) 104.8 x 241.3 mm (4.12 x 9.5 in.)	Short-edge feed	X	X
Envelope (Monarch 7-3/4) 98.4 x 190.5 mm (3.875 x 7.5 in.)	Short-edge feed	X	X

[1] Supports paper sizes ranging from 139.7 x 148 mm (5.5 x 5.83 in.) to 304.8 x 600 mm (12 x 23.62 in.).

[2] Supports paper sizes ranging from 125 x 148 mm (4.93 x 5.83 in.) to 304.8 x 457.2 mm (12 x 18 in.).

Paper size	Orientation	Paper transport + Staple, hole punch finisher	Paper transport + Booklet finisher
		Bin 1	Bin 1
Envelope (DL) 110 x 220 mm (4.33 x 8.66 in.)	Short-edge feed	X	X
Envelope (ISO C4) 229 x 324 mm (9 x 12.8 in.)	Short-edge feed	X	X
Envelope (ISO C5) 162 x 229 mm (6.38 x 9 in.)	Short-edge feed	X	X
Universal	N/A	✓[1]	✓[2]

[1] Supports paper sizes ranging from 139.7 x 148 mm (5.5 x 5.83 in.) to 304.8 x 600 mm (12 x 23.62 in.).

[2] Supports paper sizes ranging from 125 x 148 mm (4.93 x 5.83 in.) to 304.8 x 457.2 mm (12 x 18 in.).

Paper sizes supported by the output bins (with paper transport with folding option)

Paper size	Orientation	Paper transport with folding option + Staple, hole punch finisher	Paper transport with folding option + Booklet finisher
		Bin 1	Bin 1
4x6 Card	Short-edge feed	X	X
	Long-edge feed	X	X
A6 105 x 148 mm (4.13 x 5.83 in.)	Short-edge feed	X	X
	Long-edge feed	X	X
1/3 A4	Short-edge feed	X	X
	Long-edge feed	X	X
A5 148 x 210 mm (5.83 x 8.27 in.)	Short-edge feed	✓	✓
	Long-edge feed	✓	✓
A4 210 x 297 mm (8.27 x 11.7 in.)	Short-edge feed	✓	✓
	Long-edge feed	✓	✓
A3 297 x 420 mm (11.69 x 16.54 in.)	Short-edge feed	✓	✓

[1] Supports paper sizes ranging from 139.7 x 148 mm (5.5 x 5.83 in.) to 304.8 x 600 mm (12 x 23.62 in.).

[2] Supports paper sizes ranging from 125 x 148 mm (4.93 x 5.83 in.) to 304.8 x 457.2 mm (12 x 18 in.).

Paper size	Orientation	Paper transport with folding option + Staple, hole punch finisher	Paper transport with folding option + Booklet finisher
		Bin 1	Bin 1
JIS B5 182 x 257 mm (7.17 x 10.1 in.)	Short-edge feed	✓	✓
	Long-edge feed	✓	✓
JIS B4 257 x 364 mm (10.12 x 14.33 in.)	Short-edge feed	✓	✓
Statement 139.7 x 215.9 mm (5.5 x 8.5 in.)	Short-edge feed	✓	✓
	Long-edge feed	✓	✓
Executive 184.2 x 266.7 mm (7.25 x 10.5 in.)	Short-edge feed	✓	✓
	Long-edge feed	✓	✓
Letter 215.9 x 279.4 mm (8.5 x 11 in.)	Short-edge feed	✓	✓
	Long-edge feed	✓	✓
Folio 215.9 x 330.2 mm (8.5 x 13 in.)	Short-edge feed	✓	✓
Oficio (Mexico) 215.9 x 340.4 mm (8.5 x 13.4 in.)	Short-edge feed	✓	✓
Legal 215.9 x 355.6 mm (8.5 x 14 in.)	Short-edge feed	✓	✓
Ledger 279.4 x 431.8 mm (11 x 17 in.)	Short-edge feed	✓	✓
12x18 304.8 x 457.2 mm (12 x 18 in.)	Short-edge feed	✓	✓
SRA3 320.04 x 449.58 mm (12.6 x 17.7 in.)	Short-edge feed	X	X

[1] Supports paper sizes ranging from 139.7 x 148 mm (5.5 x 5.83 in.) to 304.8 x 600 mm (12 x 23.62 in.).

[2] Supports paper sizes ranging from 125 x 148 mm (4.93 x 5.83 in.) to 304.8 x 457.2 mm (12 x 18 in.).

Paper size	Orientation	Paper transport with folding option + Staple, hole punch finisher	Paper transport with folding option + Booklet finisher
		Bin 1	Bin 1
Envelope (Choukei #3) 120 x 235 mm (4.75 x 9.25 in.)	Short-edge feed	X	X
Hagaki 100 x 148 mm (3.94 x 5.83 in.)	Short-edge feed	X	X
B5 Envelope 176 x 250 mm (6.93 x 9.84 in.)	Short-edge feed	X	X
Envelope (Commercial #9) 98.4 x 225.4 mm (3.875 x 8.9 in.)	Short-edge feed	X	X
Envelope (Commercial #10) 104.8 x 241.3 mm (4.12 x 9.5 in.)	Short-edge feed	X	X
Envelope (Monarch 7-3/4) 98.4 x 190.5 mm (3.875 x 7.5 in.)	Short-edge feed	X	X
Envelope (DL) 110 x 220 mm (4.33 x 8.66 in.)	Short-edge feed	X	X
Envelope (ISO C4) 229 x 324 mm (9 x 12.8 in.)	Short-edge feed	X	X
Envelope (ISO C5) 162 x 229 mm (6.38 x 9 in.)	Short-edge feed	X	X
Universal	N/A	✓[1]	✓[2]

[1] Supports paper sizes ranging from 139.7 x 148 mm (5.5 x 5.83 in.) to 304.8 x 600 mm (12 x 23.62 in.).

[2] Supports paper sizes ranging from 125 x 148 mm (4.93 x 5.83 in.) to 304.8 x 457.2 mm (12 x 18 in.).

Supported paper types

Paper types supported by the basic configuration

Paper size	Standard 550-sheet tray	Multipurpose feeder	Two-sided printing	Automatic document feeder
Plain paper	✓	✓	✓	✓
Card stock	✓	✓	✓	X
Recycled	✓	✓	✓	✓
Glossy	✓	✓	✓	X
Heavy glossy	✓	✓	✓	X
Labels	✓	✓	X	X
Vinyl labels	✓	✓	X	X
Bond	✓	✓	✓	✓
Envelope	✓	✓	X	X
Rough envelope	✓	✓	X	X
Letterhead	✓	✓	✓	✓
Preprinted	✓	✓	✓	✓
Colored paper	✓	✓	✓	✓
Light paper	✓	✓	✓	✓
Heavy paper	✓	✓	✓	✓
Rough cotton	✓	✓	✓	X
Custom type	✓	✓	✓	✓

Paper types supported by the optional trays

Paper size	Optional 550-sheet tray	2 x 550-sheet tray	2000-sheet tandem tray	1500-sheet tray
Plain paper	✓	✓	✓	✓
Card stock	✓	✓	✓	✓
Transparencies	X	X	X	X
Recycled	✓	✓	✓	✓
Glossy	✓	✓	✓	✓
Heavy glossy	✓	✓	✓	✓
Labels	✓	✓	X	X
Vinyl labels	✓	✓	X	X
Bond	✓	✓	✓	✓
Envelope	✓	✓	X	X
Rough envelope	✓	✓	X	X

Paper size	Optional 550-sheet tray	2 x 550-sheet tray	2000-sheet tandem tray	1500-sheet tray
Letterhead	✓	✓	✓	✓
Preprinted	✓	✓	✓	✓
Colored paper	✓	✓	✓	✓
Light paper	✓	✓	✓	✓
Heavy paper	✓	✓	✓	✓
Rough cotton	✓	✓	✓	✓
Custom type	✓	✓	✓	✓

Paper types supported by the output bin

Paper size	Paper transport + Staple, hole punch finisher			Paper transport + Booklet finisher			
	Standard bin (Finisher top bin)	Bin 1 (Finisher staple, hole punch, offset bin)	Bin 2 (Paper transport bin)	Standard bin (Finisher top bin)	Bin 1 (Finisher staple, hole punch, offset bin)	Bin 2 (Finisher booklet bin)	Bin 3 (Paper transport bin)
Plain paper	✓	✓	✓	✓	✓	✓*	✓
Card stock	✓	✓	✓	✓	✓	X	✓
Recycled	✓	✓	✓	✓	✓	✓*	✓
Glossy	✓	✓	✓	✓	✓	✓*	✓
Heavy glossy	✓	✓	✓	✓	✓	X	✓
Labels	✓	✓	✓	✓	✓	X	X
Vinyl labels	✓	✓	✓	✓	✓	X	X
Bond	✓	✓	✓	✓	✓	✓*	✓
Envelope	X	X	✓	X	X	X	✓
Rough envelope	X	X	✓	X	X	X	✓
Letterhead	✓	✓	✓	✓	✓	✓*	✓
Preprinted	✓	✓	✓	✓	✓	✓*	✓
Colored paper	✓	✓	✓	✓	✓	✓*	✓
Light paper	✓	✓	✓	✓	✓	✓*	✓
Heavy paper	✓	✓	✓	✓	✓	X	X
Rough cotton	✓	✓	✓	✓	✓	X	X
Custom type	✓	✓	✓	✓	✓	✓*	✓

* The maximum length of the universal paper size in the case of banner paper is 1320.8 x 52 in. Load only one sheet of banner paper at a time.

Paper types supported by the output bin (with paper transport with folding option)

Paper size	Paper transport with folding option + Staple, hole punch finisher			Paper transport with folding option + Booklet finisher			
	Standard bin (Finisher top bin)	Bin 1 (Finisher stapler/punch, offset bin)	Bin 2 (Paper transport bin)	Standard bin (Finisher top bin)	Bin 1 (Finisher stapler/punch, offset bin)	Bin 2 (Finisher booklet bin)	Bin 3 (Paper transport bin)
Plain paper	✓	✓	✓	✓	✓	✓	✓
Card stock	✓	✓	✓	✓	✓	X	✓
Recycled	✓	✓	✓	✓	✓	✓	✓
Glossy	✓	✓	✓	✓	✓	✓	✓
Heavy glossy	✓	✓	✓	✓	✓	X	✓
Labels	✓	✓	✓	✓	✓	X	✓
Vinyl labels	✓	✓	✓	✓	✓	X	✓
Bond	✓	✓	✓	✓	✓	✓	✓
Envelope	X	X	✓	X	X	X	✓
Rough envelope	X	X	✓	X	X	X	✓
Letterhead	✓	✓	✓	✓	✓	X	✓
Preprinted	✓	✓	✓	✓	✓	X	✓
Colored paper	✓	✓	✓	✓	✓	✓	✓
Light paper	✓	✓	✓	✓	✓	✓	✓
Heavy paper	✓	✓	✓	✓	✓	X	X
Rough cotton	✓	✓	✓	✓	✓	X	X
Custom type	✓	✓	✓	✓	✓	✓*	✓

* The maximum length of the universal paper size in the case of banner paper is 1320.8 x 52 in. Load only one sheet of banner paper at a time.

Paper types supported by the paper transport with folding option, offset stacker, staple finisher

Paper size	Paper transport with folding option only	Offset stacker	Staple finisher
Plain paper	✓	✓	✓
Card stock	✓	✓	✓
Recycled	✓	✓	✓
Glossy	✓	✓	✓
Heavy glossy	✓	✓	✓
Labels	✓	✓	✓

Paper size	Paper transport with folding option only	Offset stacker	Staple finisher
Vinyl labels	✓	✓	✓
Bond	✓	✓	✓
Envelope	✓	✓	✓
Rough envelope	✓	✓	✓
Letterhead	✓	✓	✓
Preprinted	✓	✓	✓
Colored paper	✓	✓	✓
Light paper	✓	✓	✓
Heavy paper	✓	✓	✓
Rough cotton	✓	✓	✓
Custom type	✓	✓	✓

Paper types supported by the staple, hole punch finisher and booklet finisher

Paper size	Finisher top bin (Standard bin)				Finisher staple bin (Bin 1)			
	Offset	Hole punch	Staple	Fold	Offset	Hole punch	Staple	Fold
Plain paper	X	✓	X	✓	✓	✓	✓	✓
Card stock	X	X	X	X	✓	X	X	X
Recycled	X	✓	X	✓	✓	✓	✓	✓
Glossy	X	✓	X	✓	✓	✓	✓	✓
Heavy glossy	X	X	X	X	✓	X	X	X
Labels	X	X	X	X	✓	X	X	X
Vinyl labels	X	X	X	X	✓	X	X	X
Bond	X	✓	X	✓	✓	✓	✓	✓
Letterhead	X	✓	X	✓	✓	✓	✓	✓
Preprinted	X	✓	X	✓	✓	✓	✓	✓
Colored paper	X	✓	X	✓	✓	✓	✓	✓
Light paper	X	✓	X	✓	✓	✓	✓	✓
Heavy paper	X	X	X	X	✓	X	X	X
Rough cotton	X	✓	X	X	✓	✓	X	X
Custom type	X	✓	X	✓	✓	✓	✓	✓

Supported paper weights

Supported paper weights

Standard or optional 550-sheet tray, 2 x 550-sheet tray, 1500-sheet tray, and 2000-sheet tandem tray	Multipurpose feeder	Two-sided printing	Automatic document feeder
60–300 g/m^2 (16–80-lb bond)	60–300 g/m^2 (16–80-lb bond)	60–220 g/m^2 (16–59-lb bond)	50–150 g/m^2 (14–40-lb bond)

Lexmark C2335, CS531, CS632, CS639, CX532, CX635, XC2335 Printers and MFPs

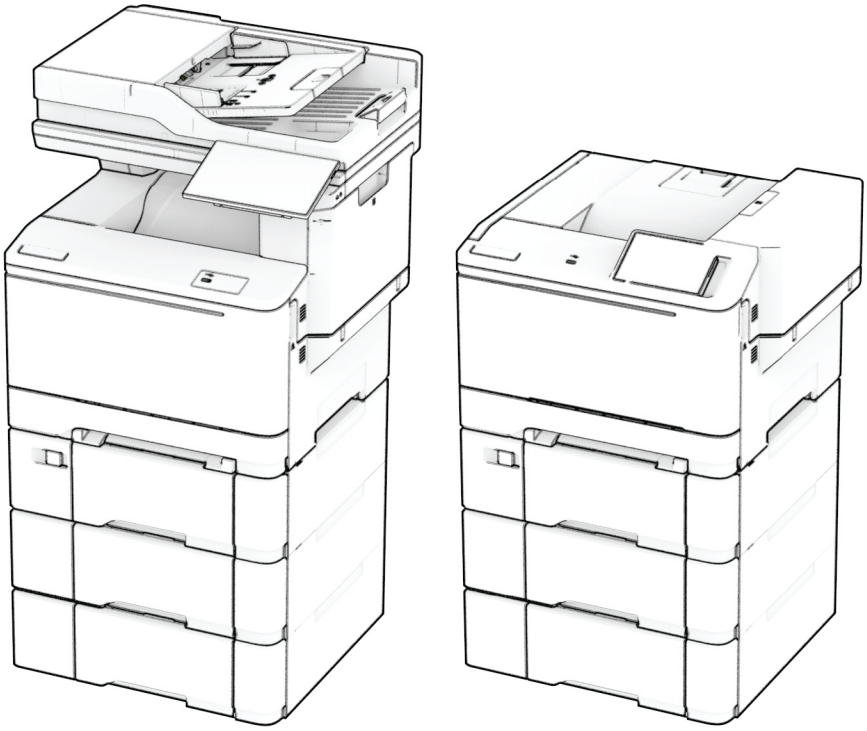

The following tables provide information on standard and optional paper sources and the sizes, types, and weights of paper that they support.

Note: For an unlisted paper size, select the closest *larger* listed size.

Supported paper sizes

Paper sizes supported by the trays, manual feeder, and two-sided printing

Paper size and dimension	Standard 250-sheet tray	Manual feeder	Optional 650-sheet duo tray		Optional 550-sheet tray	Two-sided printing
			550-sheet tray	Multipurpose feeder		
A4 210 x 297 mm (8.27 x 11.7 in.)	✓	✓	✓	✓	✓	✓
A5 Portrait (SEF)[1,2] 148 x 210 mm (5.83 x 8.27 in.)	X	X	✓	X	✓	X
A5 Landscape (LEF)[1,2] 210 x 148 mm (8.27 x 5.83 in.)	✓	✓	X	X	X	X
A6 105 x 148 mm (4.13 x 5.83 in.)	✓	✓	X	✓	X	X
1/3 A4 95 x 210 mm (3.7 x 8.3 in.)	✓	✓	X	✓	X	X
JIS B5 182 x 257 mm (7.17 x 10.1 in.)	✓	✓	✓	✓	✓	X
Letter 215.9 x 279.4 mm (8.5 x 11 in.)	✓	✓	✓	✓	✓	✓
Legal 215.9 x 355.6 mm (8.5 x 14 in.)	✓	✓	✓	✓	✓	✓
Executive 184.2 x 266.7 mm (7.25 x 10.5 in.)	✓	✓	✓	✓	✓	X

[1] Load this paper size into the standard tray and the manual feeder with the long edge entering the printer first.

[2] Load this paper size into the optional trays and the multipurpose feeder with the short edge entering the printer first.

[3] When Universal is selected, the page is formatted for 215.9 x 355.6 mm (8.5 x 14 in.) unless the size is specified by the software application.

[4] Load narrow paper with the short edge entering the printer first.

[5] When Other Envelope is selected, the page is formatted for 215.9 x 355.6 mm (8.5 x 14 in.) unless the size is specified by the software application.

Paper size and dimension	Standard 250-sheet tray	Manual feeder	Optional 650-sheet duo tray		Optional 550-sheet tray	Two-sided printing
			550-sheet tray	Multipurpose feeder		
Oficio (Mexico) 215.9 x 340.4 mm (8.5 x 13.4 in.)	✓	✓	✓	✓	✓	✓
Folio 215.9 x 330.2 mm (8.5 x 13 in.)	✓	✓	✓	✓	✓	✓
Statement 139.7 x 215.9 mm (5.5 x 8.5 in.)	✓	✓	X	✓	X	X
Hagaki 100 x 148 mm (3.94 x 5.83 in.)	✓	✓	X	✓	X	X
Universal[3,4] 98.4 x 148 mm to 215.9 x 355.6 mm (3.87 x 5.83 in. to 8.5 x 14 in.)	✓	✓	X	✓	X	X
Universal[3,4] 76.2 x 127 mm to 215.9 x 355.6 mm (3 x 5 in. to 8.5 x 14 in.)	X	✓	X	✓	X	X
Universal[3,4] 148 x 210 mm to 215.9 x 355.6 mm (5.83 x 8.27 in. to 8.5 x 14 in.)	✓	✓	✓	✓	✓	X
Universal[3,4] 210 x 250 mm to 215.9 x 355.6 mm (8.27 x 9.84 in. to 8.5 x 14 in.)	✓	✓	✓	✓	✓	✓
7 3/4 Envelope 98.4 x 190.5 mm (3.875 x 7.5 in.)	✓	✓	X	✓	X	X

[1] Load this paper size into the standard tray and the manual feeder with the long edge entering the printer first.

[2] Load this paper size into the optional trays and the multipurpose feeder with the short edge entering the printer first.

[3] When Universal is selected, the page is formatted for 215.9 x 355.6 mm (8.5 x 14 in.) unless the size is specified by the software application.

[4] Load narrow paper with the short edge entering the printer first.

[5] When Other Envelope is selected, the page is formatted for 215.9 x 355.6 mm (8.5 x 14 in.) unless the size is specified by the software application.

Paper size and dimension	Standard 250-sheet tray	Manual feeder	Optional 650-sheet duo tray		Optional 550-sheet tray	Two-sided printing
			550-sheet tray	Multipurpose feeder		
9 Envelope 98.4 x 225.4 mm (3.875 x 8.9 in.)	✓	✓	X	✓	X	X
10 Envelope 104.8 x 241.3 mm (4.12 x 9.5 in.)	✓	✓	X	✓	X	X
DL Envelope 110 x 220 mm (4.33 x 8.66 in.)	✓	✓	X	✓	X	X
C5 Envelope 162 x 229 mm (6.38 x 9.01 in.)	✓	✓	X	✓	X	X
B5 Envelope 176 x 250 mm (6.93 x 9.84 in.)	✓	✓	X	✓	X	X
Monarch 98.425 x 190.5 mm (3.875 x 7.5 in.)	X	X	X	X	X	X
Other Envelope[5] 98.4 x 162 mm to 176 x 250 mm (3.87 x 6.38 in. to 6.93 x 9.84 in.)	✓	✓	X	✓	X	X

[1] Load this paper size into the standard tray and the manual feeder with the long edge entering the printer first.

[2] Load this paper size into the optional trays and the multipurpose feeder with the short edge entering the printer first.

[3] When Universal is selected, the page is formatted for 215.9 x 355.6 mm (8.5 x 14 in.) unless the size is specified by the software application.

[4] Load narrow paper with the short edge entering the printer first.

[5] When Other Envelope is selected, the page is formatted for 215.9 x 355.6 mm (8.5 x 14 in.) unless the size is specified by the software application.

Paper sizes supported by the scanner and automatic document feeder

Paper size and dimension	Scanner	Automatic document feeder
A4 210 x 297 mm (8.27 x 11.7 in.)	✓	✓
A5 Portrait (SEF) 148 x 210 mm (5.83 x 8.27 in.)	✓	✓
A5 Landscape (LEF) 210 x 148 mm (8.27 x 5.83 in.)	✓	✓
A6 105 x 148 mm (4.13 x 5.83 in.)	✓	✓
1/3 A4 95 x 210 mm (3.7 x 8.3 in.)	✓	X
JIS B5 182 x 257 mm (7.17 x 10.1 in.)	✓	✓
Letter 215.9 x 279.4 mm (8.5 x 11 in.)	✓	✓
Legal 215.9 x 355.6 mm (8.5 x 14 in.)	✓	✓
Executive 184.2 x 266.7 mm (7.25 x 10.5 in.)	✓	✓
Oficio (Mexico) 215.9 x 340.4 mm (8.5 x 13.4 in.)	✓	✓
Folio 215.9 x 330.2 mm (8.5 x 13 in.)	✓	✓
Statement 139.7 x 215.9 mm (5.5 x 8.5 in.)	✓	✓
Hagaki 100 x 148 mm (3.94 x 5.83 in.)	✓	X
Universal[1,2] 98.4 x 148 mm to 215.9 x 355.6 mm (3.87 x 5.83 in. to 8.5 x 14 in.)	✓	X
Universal[1,2] 76.2 x 127 mm to 215.9 x 355.6 mm (3 x 5 in. to 8.5 x 14 in.)	✓	X

[1] When Universal is selected, the page is formatted for 215.9 x 355.6 mm (8.5 x 14 in.) unless the size is specified by the software application.

[2] Load narrow paper with the short edge entering the printer first.

[3] When Other Envelope is selected, the page is formatted for 215.9 x 355.6 mm (8.5 x 14 in.) unless the size is specified by the software application.

Paper size and dimension	Scanner	Automatic document feeder
Universal[1,2] 148 x 210 mm to 215.9 x 355.6 mm (5.83 x 8.27 in. to 8.5 x 14 in.)	✓	✓
Universal[1,2] 210 x 250 mm to 215.9 x 355.6 mm (8.27 x 9.84 in. to 8.5 x 14 in.)	✓	✓
7 3/4 Envelope 98.4 x 190.5 mm (3.875 x 7.5 in.)	✓	X
9 Envelope 98.4 x 225.4 mm (3.875 x 8.9 in.)	✓	X
10 Envelope 104.8 x 241.3 mm (4.12 x 9.5 in.)	✓	X
DL Envelope 110 x 220 mm (4.33 x 8.66 in.)	✓	X
C5 Envelope 162 x 229 mm (6.38 x 9.01 in.)	✓	X
B5 Envelope 176 x 250 mm (6.93 x 9.84 in.)	✓	X
Monarch 98.425 x 190.5 mm (3.875 x 7.5 in.)	✓	X
Other Envelope[3] 98.4 x 162 mm to 176 x 250 mm (3.87 x 6.38 in. to 6.93 x 9.84 in.)	✓	X

[1] When Universal is selected, the page is formatted for 215.9 x 355.6 mm (8.5 x 14 in.) unless the size is specified by the software application.

[2] Load narrow paper with the short edge entering the printer first.

[3] When Other Envelope is selected, the page is formatted for 215.9 x 355.6 mm (8.5 x 14 in.) unless the size is specified by the software application.

Note: Your printer model may have a 650-sheet duo tray, which consists of a 550-sheet tray and an integrated 100-sheet multipurpose feeder. The 550-sheet tray of the 650-sheet duo tray supports the same paper sizes as the optional 550-sheet tray. The integrated multipurpose feeder supports different paper sizes, types, and weights.

Supported paper types

Paper types supported by the trays, manual feeder, and two-sided printing

Paper type	Standard 250-sheet tray	Manual feeder	Optional 650-sheet duo tray		Optional 550-sheet tray	Two-sided printing
			550-sheet tray	Multipurpose feeder		
Plain	√	√	√	√	√	√
Card stock	√	√	√	√	√	X
Labels	√	√	√	√	√	√
Vinyl Labels	√	√	√	√	√	X
Envelope	√	√	X	√	X	X

Paper types supported by the scanner and ADF

Paper type	Scanner	ADF
Plain	√	√
Card stock	√	X
Labels	√	X
Vinyl Labels	√	X
Envelope	√	X

Notes:

- Your printer model may have a 650-sheet duo tray, which consists of a 550-sheet tray and an integrated 100-sheet multipurpose feeder. The 550-sheet tray of the 650-sheet duo tray supports the same paper type as the 550-sheet tray. The integrated multipurpose feeder supports different paper sizes, types, and weights.
- Labels, envelopes, and card stock always print at reduced speed.
- Vinyl labels are supported for occasional use only and must be tested for acceptability. Some vinyl labels may feed more reliably from the multipurpose feeder.

Supported paper weights

Supported paper weights

Standard 250-sheet tray	Manual feeder	Optional 650-sheet duo tray		Optional 550-sheet tray	Two-sided printing	ADF
		550-sheet tray	Multipurpose feeder			
60–218 g/m^2 (16–58-lb bond)	60–218 g/m^2 (16–58-lb bond)	60–176 g/m^2 (16–47-lb bond)	60–176 g/m^2 (16–47-lb bond)	60–176 g/m^2 (16–47-lb bond)	60–105 g/m^2 (16–28-lb bond)	52–120 g/m^2 (14–32-lb bond)

Notes:

- Your printer model may have a 650-sheet duo tray, which consists of a 550-sheet tray and an integrated 100-sheet multipurpose feeder. The 550-sheet tray of the 650-sheet duo tray supports the same paper types as the 550-sheet tray. The integrated multipurpose feeder supports different paper sizes, types, and weights.
- For 60 to 176 g/m^2 (16–47-lb bond) paper, grain long fibers are recommended.
- Paper less than 75 g/m^2 (20-lb bond) must be printed with Paper Type set to Light Paper. Failure to do so may cause excessive curl which can lead to feeding errors, especially in more humid environments.

Lexmark M3350, MS531, MS631, MS632, MS639, MX532, MX632, XM3350 Printers and MFPs

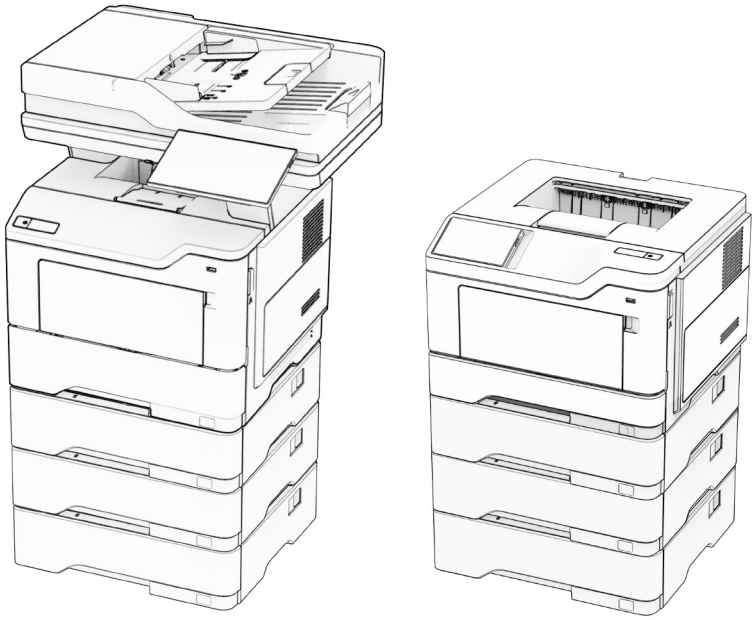

The following tables provide information on standard and optional paper sources and the sizes, types, and weights of paper that they support.

Note: For an unlisted paper size, select the closest *larger* listed size.

Supported paper sizes

Paper size	Standard 550-sheet tray	Optional 250- or 550-sheet tray	Multipurpose feeder	Two-sided printing	Scanner glass	Automatic document feeder
A4 210 x 297 mm (8.27 x 11.7 in.)	✓	✓	✓	✓	✓	✓
A5 Portrait (SEF) 148 x 210 mm (5.83 x 8.27 in.)	✓	✓	✓	X	✓	✓
A5 Landscape (LEF)[1] 210 x 148 mm (8.27 x 5.83 in.)	✓	X	✓	X	✓	✓
A6 105 x 148 mm (4.13 x 5.83 in.)	✓	X	✓	X	✓	✓
JIS B5 182 x 257 mm (7.17 x 10.1 in.)	✓	✓	✓	X	✓	✓
Oficio (Mexico) 216 x 340 mm (8.5 x 13.4 in.)	✓	✓	✓	✓	✓	✓
Hagaki 100 x 148 mm (3.93 x 5.83 in.)	X	X	✓	X	✓	X
Statement 139.7 x 215.9 mm (5.5 x 8.5 in.)	✓	✓	✓	X	✓	✓
Executive 184.2 x 266.7 mm (7.25 x 10.5 in.)	✓	✓	✓	X	✓	✓
Letter 215.9 x 279.4 mm (8.5 x 11 in.)	✓	✓	✓	✓	✓	✓

[1] The default support is short-edge feed.

[2] When Universal is selected, the page is formatted for 215.90 x 355.60 mm (8.5 x 14 in.) unless specified by the application.

[3] Paper must at least be 210 mm (8.27 in.) wide and 279.4 mm (11 in.) long for two-sided printing.

Paper size	Standard 550-sheet tray	Optional 250- or 550-sheet tray	Multipurpose feeder	Two-sided printing	Scanner glass	Automatic document feeder
Legal 215.9 x 355.6 mm (8.5 x 14 in.)	✓	✓	✓	✓	✓	✓
Folio 215.9 x 330.2 mm (8.5 x 13 in.)	✓	✓	✓	✓	✓	✓
Universal[2] 105 x 148 mm to 215.9 x 359.92 mm (4.13 x 5.83 in. to 8.5 x 14.17 in.)	✓	✓	X	✓[3]	X	✓
Universal[2] 76.2 x 127 mm to 215.9 x 359.92 mm (3 x 5.83 in. to 8.5 x 14.17 in.)	X	X	✓	X	X	X
Universal[2] 25.4 x 25.4 mm to 215.9 x 355.6 mm (1 x 1 in. to 8.5 x 14 in.)	X	X	X	X	✓	X
7 3/4 Envelope 98.4 x 190.5 mm (3.875 x 7.5 in.)	X	X	✓	X	✓	X
9 Envelope 98.4 x 225.4 mm (3.875 x 8.9 in.)	X	X	✓	X	✓	X
10 Envelope 104.8 x 241.3 mm (4.12 x 9.5 in.)	X	X	✓	X	✓	X
DL Envelope 110 x 220 mm (4.33 x 8.66 in.)	X	X	✓	X	✓	X
C5 Envelope 162 x 229 mm (6.38 x 9.01 in.)	X	X	✓	X	✓	X

[1] The default support is short-edge feed.

[2] When Universal is selected, the page is formatted for 215.90 x 355.60 mm (8.5 x 14 in.) unless specified by the application.

[3] Paper must at least be 210 mm (8.27 in.) wide and 279.4 mm (11 in.) long for two-sided printing.

Paper size	Standard 550-sheet tray	Optional 250- or 550-sheet tray	Multipurpose feeder	Two-sided printing	Scanner glass	Automatic document feeder
B5 Envelope 176 x 250 mm (6.93 x 9.84 in.)	X	X	✓	X	✓	X
Other Envelope 76.2 x 127 mm to 215.9 x 359.92 mm (3 x 5.83 in. to 8.5 x 14.17 in.)	X	X	✓	X	✓	X

[1] The default support is short-edge feed.

[2] When Universal is selected, the page is formatted for 215.90 x 355.60 mm (8.5 x 14 in.) unless specified by the application.

[3] Paper must at least be 210 mm (8.27 in.) wide and 279.4 mm (11 in.) long for two-sided printing.

Supported paper types

Paper type	Standard 550-sheet tray	Optional 250- or 550-sheet tray	Multipurpose feeder	Two-sided printing	Automatic document feeder
Plain paper	✓	✓	✓	✓	✓
Card stock	X	X	✓	X	X
Recycled	✓	✓	✓	✓	✓
Paper labels*	✓	✓	✓	X	X
Bond	✓	✓	✓	✓	✓
Letterhead	✓	✓	✓	✓	✓
Preprinted	✓	✓	✓	✓	✓
Colored Paper	✓	✓	✓	✓	✓
Light Paper	✓	✓	✓	✓	✓
Heavy Paper	✓	✓	✓	✓	✓
Rough/Cotton	✓	✓	✓	✓	✓
Envelope	X	X	✓	X	X

* One-sided paper labels are supported for occasional use of less than 20 pages per month. Vinyl, pharmacy, or two-sided labels are not supported.

Paper type	Standard 550-sheet tray	Optional 250- or 550-sheet tray	Multipurpose feeder	Two-sided printing	Automatic document feeder
Rough envelope	X	X	√	X	X
* One-sided paper labels are supported for occasional use of less than 20 pages per month. Vinyl, pharmacy, or two-sided labels are not supported.					

Supported paper weights

Supported paper weights

Standard 550-sheet tray	Optional 250- or 550-sheet tray	Multipurpose feeder	Two-sided printing*	Automatic document feeder
60–120 g/m^2 (16–32 lb bond)	60–120 g/m^2 (16–32 lb bond)	60–216 g/m^2 (16–58 lb bond)	60–120 g/m^2 (16–32 lb bond)	52–120 g/m^2 (14–32 lb bond)
* Does not support card stock, labels, or envelopes.				

Lexmark C4342, C4352, CS730, CS735, CS737, CX730, CX735, CX737, XC4342, XC4352 Printers and MFPs



The following tables provide information on standard and optional paper sources and the sizes, types, and weights of paper that they support.

Note: For an unlisted paper size, select the closest *larger* listed size.

Supported paper sizes

Paper size	650-sheet duo tray		Optional 550-sheet tray	Two-sided printing	Scanner	ADF
	550-sheet tray	100-sheet multipurpose feeder[1]				
A4 210 x 297 mm (8.27 x 11.7 in.)	✓	✓	✓	✓	✓	✓
A5 landscape[2] 210 x 148 mm (8.27 x 5.83 in.)	✓	✓	✓	✓	✓	✓
A5 portrait[2] 148 x 210 mm (5.83 x 8.27 in.)	✓	✓	✓	✓	✓	✓
A6 105 x 148 mm (4.13 x 5.83 in.)	✓	✓	✓	✓	✓	✓
Banner 215.9 x 1320.8 mm (8.5 x 52 in.)	X	✓	X	X	X	X
Executive 184.2 x 266.7 mm (7.25 x 10.5 in.)	✓	✓	✓	✓	✓	✓
Folio 215.9 x 330.2 mm (8.5 x 13 in.)	✓	✓	✓	✓	✓	✓
Hagaki 100 x 148 mm (3.94 x 5.83 in.)	X	✓	X	X	✓	X
JIS B5 182 x 257 mm (7.17 x 10.1 in.)	✓	✓	✓	✓	✓	✓

[1] Does not support automatic size sensing.

[2] Supported in both the portrait and landscape orientations. When fed in the portrait orientation, A5 is treated as narrow paper. When fed in landscape orientation, it is treated as a regular width paper.

[3] When Universal is selected, the page is formatted for 215.9 x 355.6 mm (8.5 x 14 in.) unless the size is specified by the software application.

[4] Load narrow paper in portrait orientation.

[5] When Other Envelope is selected, the page is formatted for 215.9 x 355.6 mm (8.5 x 14 in.) unless a size is specified by the software application.

Paper size	650-sheet duo tray		Optional 550-sheet tray	Two-sided printing	Scanner	ADF
	550-sheet tray	100-sheet multipurpose feeder[1]				
Legal 215.9 x 355.6 mm (8.5 x 14 in.)	✓	✓	✓	✓	✓	✓
Letter 215.9 x 279.4 mm (8.5 x 11 in.)	✓	✓	✓	✓	✓	✓
Oficio (Mexico) 216 x 340 mm (8.5 x 13.4 in.)	✓	✓	✓	✓	✓	✓
Statement 139.7 x 215.9 mm (5.5 x 8.5 in.)	✓	✓	✓	✓	✓	✓
Universal[3, 4] 76.2 x 127 mm to 215.9 x 355.6 mm (3 x 5 in. to 8.5 x 14 in.)	X	✓	X	X	✓	X
Universal[3, 4] 105 x 148 mm to 215.9 x 355.6 mm (4.13 x 5.83 in. to 8.5 x 14 in.)	✓	✓	✓	✓	✓	X
7 3/4 Envelope 98.4 x 190.5 mm (3.875 x 7.5 in.)	X	✓	X	X	✓	X
9 Envelope 98.4 x 225.4 mm (3.875 x 8.9 in.)	X	✓	X	X	✓	X
10 Envelope 104.8 x 241.3 mm (4.12 x 9.5 in.)	✓	✓	✓	X	✓	X

[1] Does not support automatic size sensing.

[2] Supported in both the portrait and landscape orientations. When fed in the portrait orientation, A5 is treated as narrow paper. When fed in landscape orientation, it is treated as a regular width paper.

[3] When Universal is selected, the page is formatted for 215.9 x 355.6 mm (8.5 x 14 in.) unless the size is specified by the software application.

[4] Load narrow paper in portrait orientation.

[5] When Other Envelope is selected, the page is formatted for 215.9 x 355.6 mm (8.5 x 14 in.) unless a size is specified by the software application.

Paper size	650-sheet duo tray		Optional 550-sheet tray	Two-sided printing	Scanner	ADF
	550-sheet tray	100-sheet multipurpose feeder[1]				
11 Envelope 114.3 x 263.525 mm (4.5 x 10.375 in.)	✓	✓	✓	X	✓	X
12 Envelope 120.65 x 279.4 mm (4.75 x 11 in.)	✓	✓	✓	X	✓	X
B5 Envelope 176 x 250 mm (6.93 x 9.84 in.)	✓	✓	✓	X	✓	X
B6 Envelope 125 x 176 mm (4.92 x 6.92 in.)	✓	✓	✓	X	✓	X
C5 Envelope 162 x 229 mm (6.38 x 9.01 in.)	✓	✓	✓	X	✓	X
C6 Envelope 114 x 162 mm (4.48 x 6.37 in.)	✓	✓	✓	X	✓	X
DL Envelope 110 x 220 mm (4.33 x 8.66 in.)	✓	✓	✓	X	✓	X
Monarch 98.4 x 190.5 mm (3.875 x 7.5 in.)	X	✓	X	X	✓	X
Other Envelope[5] 98.4 x 162 mm to 176 x 250 mm (3.87 x 6.38 in. to 6.93 x 9.84 in.)	X	✓	X	X	✓	X

[1] Does not support automatic size sensing.

[2] Supported in both the portrait and landscape orientations. When fed in the portrait orientation, A5 is treated as narrow paper. When fed in landscape orientation, it is treated as a regular width paper.

[3] When Universal is selected, the page is formatted for 215.9 x 355.6 mm (8.5 x 14 in.) unless the size is specified by the software application.

[4] Load narrow paper in portrait orientation.

[5] When Other Envelope is selected, the page is formatted for 215.9 x 355.6 mm (8.5 x 14 in.) unless a size is specified by the software application.

Supported paper types

Paper type	650-sheet duo tray		Optional 550-sheet tray	Two-sided printing	Scanner	ADF
	550-sheet tray	100-sheet multipurpose feeder				
Plain	√	√	√	√	√	√
Card stock	√	√	√	√	√	X
Recycled	√	√	√	√	√	√
Glossy	√	√	√	√	√	X
Labels	√	√	√	√	√	X
Vinyl Labels	√	√	√	X	√	X
Bond	√	√	√	√	√	√
Envelope	√	√	√	X	√	X
Letterhead	√	√	√	√	√	√
Preprinted	√	√	√	√	√	√
Colored Paper	√	√	√	√	√	√
Light	√	√	√	√	√	√
Heavy	√	√	√	√	√	√
Rough/Cotton	√	√	√	√	√	√
Transparency	X	X	X	X	X	X
Custom Type [x]	√	√	√	√	√	√

Notes:

- Labels, envelopes, and card stock always print at reduced speed.
- Card stock is supported in two-sided printing only up to 163 g/m^2 (90-lb index). Anything heavier is supported only in one-sided printing.
- Vinyl labels are supported for occasional use only and must be tested for acceptability. Some vinyl labels may feed more reliably from the multipurpose feeder.

Supported paper weights

650-sheet duo tray		Optional 550-sheet tray	Two-sided printing	Automatic document feeder
550-sheet tray	100-sheet multipurpose feeder			
60–218 g/m^2 (16–58-lb bond)	60–218-g/m^2 (16–58-lb bond)	60–218-g/m^2 (16–58-lb bond)	60–162-g/m^2 (16–43-lb bond)	52–120-g/m^2 (14–32-lb bond)

Paper type	Paper weight
Plain Paper	75–90.3-g/m^2 (20–24-lb bond)
Glossy	88–176-g/m^2 (60–120-lb book)
	162–176-g/m^2 grain long (60–65-lb cover)
Heavy Paper	90.3–105-g/m^2 grain long (24.1–28-lb bond)
Card stock	Up to 199-g/m^2 grain long (110-lb index)
	Up to 218-g/m^2 grain short (80-lb cover)
Labels (Paper Labels)	Up to 218-g/m^2 (58-lb bond)
Labels (Vinyl Labels)	Up to 300-g/m^2 (79.9-lb bond)
Envelopes	60–105-g/m^2 (16–28-lb bond)

Notes:

- For 60 to 176 g/m^2 (16–47-lb bond) paper, grain long fibers are recommended.
- Paper less than 75 g/m^2 (20-lb bond) must be printed with Paper Type set to Light Paper. Failure to do so may cause excessive curl which can lead to feeding errors, especially in more humid environments.
- Two-sided printing supports paper weight from 60-162 g/m^2 (16–43-lb bond) paper.
- 100% cotton content maximum weight is 90 g/m^2 (24-lb bond).

Tray fill line information

Depending on construction, paper labels and card stock can sometimes be difficult to pick and feed reliably. Performance can be improved by controlling the number of sheets of media loaded in the tray. There are two fill lines in the tray. The solid line is the maximum paper fill indicator. No media should be loaded in the tray above this line or paper jams could occur. The dashed line is the alternate paper fill indicator. It should be used if any feed or reliability issues are noted with specialty media, including labels and card stock. If paper jams occur when completely filling the tray, load the specialty media only up to the alternate paper fill indicator.

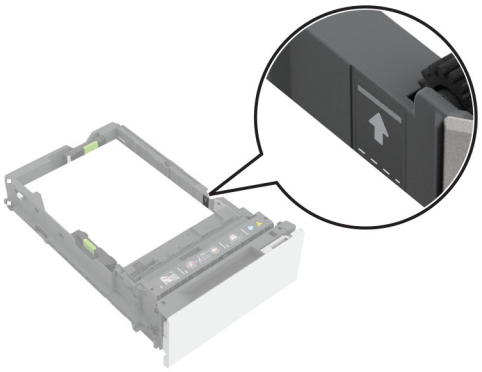

Supported card stock

Paper type	Grain direction	Paper weight
Index Bristol	Grain long	199 g/m^2 (110 lb)
	Grain short	199 g/m^2 (110 lb)
Tag	Grain long	163 g/m^2 (100 lb)
	Grain short	203 g/m^2 (125 lb)
Cover	Grain long	176 g/m^2 (65 lb)
	Grain short	218 g/m^2 (80 lb)

Supported labels

Label type	Width and length	Weight	Thickness	Smoothness
Paper	76 x 216 mm (3 x 8.5 in.)[1]	218 g/m^2 (58 lb)	0.13-0.20 mm (0.005-0.0008 in.)	50-300 Sheffield[2]
Vinyl		300 g/m^2 (79.9 lb)		

[1] The minimum size for labels supported in the multipurpose feeder is 76 x 124 mm (3 x 5 in.). The minimum size for labels supported in the standard and optional trays is 148 x 210 mm (5.8 x 8.3 in.).

[2] 50 Sheffield is optimal. Using media higher than 300 Sheffield could result in print quality degradation.

Note: Limit label printing to occasional use only, approximately 1500 labels per month.

Letterhead orientation

Source	Printing	Printed side	Paper orientation
Trays	One-sided	Faceup	Load paper with the top edge toward the front of the tray.
	Two-sided	Facedown	Load paper with the top edge toward the back of the tray.
Multipurpose feeder	One-sided	Facedown	Load paper with the top edge entering the printer first.
	Two-sided	Faceup	Load paper with the top edge entering the printer last.

Lexmark B3340, B3442, M1342, MB3442, MS331, MS431, MS439, MX331, MX431, MX432, XM1342, XM3142 Printers and MFPs



The following tables provide information on standard and optional paper sources and the sizes, types, and weights of paper that they support.

Note: For an unlisted paper size, select the closest *larger* listed size.

Supported paper sizes

Paper size	Standard 250-sheet tray	Optional 550-sheet tray	Multipurpose feeder	Two-sided printing	ADF
A4 210 x 297 mm (8.27 x 11.7 in.)	✓	✓	✓	✓	✓

[1] The default support is long-edge feed.

[2] Paper must at least be 210 mm (8.27 in.) wide and 279.4 mm (11 in.) long for two-sided printing.

[3] When Universal is selected, the page is formatted for 215.90 x 355.60 mm (8.5 x 14 in.) unless specified by the application.

Paper size	Standard 250-sheet tray	Optional 550-sheet tray	Multipurpose feeder	Two-sided printing	ADF
A5 Portrait (SEF) 148 x 210 mm (5.83 x 8.27 in.)	✓	✓	✓	X	✓
A5 Landscape (LEF)[1] 210 x 148 mm (8.27 x 5.83 in.)	✓	✓	✓	X	✓
A6 105 x 148 mm (4.13 x 5.83 in.)	✓	✓	✓	X	✓
JIS B5 182 x 257 mm (7.17 x 10.1 in.)	✓	✓	✓	X	✓
Oficio (Mexico) 215.9 x 340.4 mm (8.5 x 13.4 in.)	✓	✓	✓	✓	✓
Hagaki 100 x 148 mm (3.94 x 5.83 in.)	✓	X	✓	X	X
Statement 139.7 x 215.9 mm (5.5 x 8.5 in.)	✓	✓	✓	X	✓
Executive 184.2 x 266.7 mm (7.25 x 10.5 in.)	✓	✓	✓	X	✓
Letter 215.9 x 279.4 mm (8.5 x 11 in.)	✓	✓	✓	✓	✓
Legal 215.9 x 355.6 mm (8.5 x 14 in.)	✓	✓	✓	✓	✓
Folio 215.9 x 330.2 mm (8.5 x 13 in.)	✓	✓	✓	✓	✓

[1] The default support is long-edge feed.

[2] Paper must at least be 210 mm (8.27 in.) wide and 279.4 mm (11 in.) long for two-sided printing.

[3] When Universal is selected, the page is formatted for 215.90 x 355.60 mm (8.5 x 14 in.) unless specified by the application.

Paper size	Standard 250-sheet tray	Optional 550-sheet tray	Multipurpose feeder	Two-sided printing	ADF
Universal[3] 99 x 148 mm to 215.9 x 359.92 mm (3.9 x 5.83 in. to 8.5 x 14.17 in.)	√	√	√	√[2]	X
Universal[3] 105x 148 mm to 215.9 x 355.6 mm (4.13 x 5.83 in. to 8.5 x 14 in.)	X	X	X	X	√
7 3/4 Envelope 98.4 x 190.5 mm (3.875 x 7.5 in.)	X	X	√	X	X
9 Envelope 98.4 x 225.4 mm (3.875 x 8.9 in.)	X	X	√	X	X
10 Envelope 104.8 x 241.3 mm (4.12 x 9.5 in.)	X	X	√	X	X
DL Envelope 110 x 220 mm (4.33 x 8.66 in.)	X	X	√	X	X
C5 Envelope 162 x 229 mm (6.38 x 9.01 in.)	X	X	√	X	X
B5 Envelope 176 x 250 mm (6.93 x 9.84 in.)	X	X	√	X	X
Other Envelope 98.4 x 162 mm to 176 x 250 mm (3.87 x 6.38 in. to 6.93 x 9.84 in.)	X	X	√	X	X

[1] The default support is long-edge feed.

[2] Paper must at least be 210 mm (8.27 in.) wide and 279.4 mm (11 in.) long for two-sided printing.

[3] When Universal is selected, the page is formatted for 215.90 x 355.60 mm (8.5 x 14 in.) unless specified by the application.

Supported paper types

Paper type	Standard 250-sheet tray	Optional 550-sheet tray	Multipurpose feeder	Two-sided printing	Automatic document feeder
Plain paper	√	√	√	√	√
Card stock	X	X	√	X	X
Recycled	√	√	√	√	X
Paper labels*	√	√	√	X	X
Bond	√	√	√	√	X
Letterhead	√	√	√	√	X
Preprinted	√	√	√	√	X
Colored Paper	√	√	√	√	X
Light Paper	√	√	√	√	X
Heavy Paper	√	√	√	√	X
Rough/Cotton	√	√	√	√	X
Envelope	X	X	√	X	X
Rough envelope	X	X	√	X	X

* One-sided paper labels are supported for occasional use of less than 20 pages per month. Vinyl, pharmacy, or two-sided labels are not supported.

Supported paper weights

	Standard 250-sheet tray	Optional 550-sheet tray	Multipurpose feeder	Two-sided printing	Automatic document feeder
Paper weight	60–120 g/m^2 (16–32 lb)	60–120 g/m^2 (16–32 lb)	60–217 g/m^2 (16–58 lb)	60–90 g/m^2 (16–24 lb)	60–90 g/m^2 (16–24 lb)

Lexmark MX931, CX930, CX931, XC9325, XC9335 MFPs



The following tables provide information on standard and optional paper sources and the sizes, types, and weights of paper that they support.

Note: For an unlisted paper size, select the closest *larger* listed size.

Supported paper sizes

Paper sizes supported by the standard tray, MPF, envelope tray, and two-sided printing

Paper size	Standard 520-sheet tray	Multipurpose feeder	Envelope tray	Two-sided printing
A3[1] 297 x 420 mm (11.69 x 16.54 in.)	√	√	X	√
A4 210 x 297 mm (8.27 x 11.7 in.)	√	√[2]	X	√
A5 148 x 210 mm (5.83 x 8.27 in.)	√[1]	√[2]	X	√
A6 105 x 148 mm (4.13 x 5.83 in.)	X	√[1]	X	X
Executive 184.2 x 266.7 mm (7.25 x 10.5 in.)	√	√[2]	X	√

[1] Loads only in short-edge orientation.

[2] Loads only in long-edge orientation.

[3] Supports paper sizes ranging from 139.7 x 181.86 mm (5.5 x 7.16 in.) to 296.93 x 431.8 mm (11.69 x 17 in.).

[4] Supports paper sizes ranging from 88.9 x 98.38 mm (3.5 x 3.87 in.) to 296.93 x 482.6 mm (11.69 x 19 in.).

[5] Supports paper sizes ranging from 128 x 139.7 mm (5 x 5.5 in.) to 296.93 x 482.6 mm (11.69 x 19 in.).

Paper size	Standard 520-sheet tray	Multipurpose feeder	Envelope tray	Two-sided printing
Folio[1] 215.9 x 330.2 mm (8.5 x 13 in.)	√	√	X	√
Hagaki 100 x 148 mm (3.94 x 5.83 in.)	X	√[1]	X	X
JIS B4[1] 257 x 364 mm (10.12 x 14.33 in.)	√	√	X	√
JIS B5 182 x 257 mm (7.17 x 10.1 in.)	√	√[2]	X	√
Ledger[1] 279.4 x 4431.8 mm (11 x 17 in.)	√	√	X	√
Legal[1] 215.9 x 355.6 mm (8.5 x 14 in.)	√	√	X	√
Letter 215.9 x 279.4 mm (8.5 x 11 in.)	√	√[2]	X	√
Oficio (Mexico)[1] 215.9 x 340.4 mm (8.5 x 13.4 in.)	√	√	X	√
Statement 139.7 x 215.9 mm (5.5 x 8.5 in.)	√[1]	√[2]	X	√
Universal	√[3]	√[4]	X	√[5]
7 3/4 Envelope 98.4 x 190.5 mm (3.875 x 7.5 in.)	X	√[2]	√	X

[1] Loads only in short-edge orientation.

[2] Loads only in long-edge orientation.

[3] Supports paper sizes ranging from 139.7 x 181.86 mm (5.5 x 7.16 in.) to 296.93 x 431.8 mm (11.69 x 17 in.).

[4] Supports paper sizes ranging from 88.9 x 98.38 mm (3.5 x 3.87 in.) to 296.93 x 482.6 mm (11.69 x 19 in.).

[5] Supports paper sizes ranging from 128 x 139.7 mm (5 x 5.5 in.) to 296.93 x 482.6 mm (11.69 x 19 in.).

Paper size	Standard 520-sheet tray	Multipurpose feeder	Envelope tray	Two-sided printing
9 Envelope 98.4 x 225.4 mm (3.875 x 8.9 in.)	X	√[2]	√	X
10 Envelope 104.8 x 241.3 mm (4.12 x 9.5 in.)	X	√[2]	√	X
B5 Envelope 176 x 250 mm (6.93 x 9.84 in.)	X	√[1]	√	X
C5 Envelope 162 x 229 mm (6.38 x 9.01 in.)	X	√[2]	√	X
DL Envelope 110 x 220 mm (4.33 x 8.66 in.)	X	√[2]	√	X

[1] Loads only in short-edge orientation.

[2] Loads only in long-edge orientation.

[3] Supports paper sizes ranging from 139.7 x 181.86 mm (5.5 x 7.16 in.) to 296.93 x 431.8 mm (11.69 x 17 in.).

[4] Supports paper sizes ranging from 88.9 x 98.38 mm (3.5 x 3.87 in.) to 296.93 x 482.6 mm (11.69 x 19 in.).

[5] Supports paper sizes ranging from 128 x 139.7 mm (5 x 5.5 in.) to 296.93 x 482.6 mm (11.69 x 19 in.).

Notes:

- The ADF supports paper sizes ranging from 125 x 85 mm (4.92 x 3.35 in.) to 297 x 431.8 mm (11.69 x 17 in.).
- The flatbed scanner supports maximum paper size of 297 x 431.8 mm (11.69 x 17 in.).

Paper sizes supported by the optional trays

Paper size	Optional 520-sheet tray, optional 520-sheet tray with cabinet, and optional 3 x 520-sheet tray	Optional 2520-sheet tandem tray	Optional 2000-sheet tray
A3[1] 297 x 420 mm (11.69 x 16.54 in.)	√	√	X
A4 210 x 297 mm (8.27 x 11.7 in.)	√	√	√[2]
A5[1] 148 x 210 mm (5.83 x 8.27 in.)	√	√	X
A6 105 x 148 mm (4.13 x 5.83 in.)	X	X	X
Executive 184.2 x 266.7 mm (7.25 x 10.5 in.)	√	√	√[2]
Folio[1] 215.9 x 330.2 mm (8.5 x 13 in.)	√	√	X
Hagaki 100 x 148 mm (3.94 x 5.83 in.)	X	X	X
JIS B4[1] 257 x 364 mm (10.12 x 14.33 in.)	√	√	X
JIS B5 182 x 257 mm (7.17 x 10.1 in.)	√	√	√[2]
Ledger[1] 279.4 x 4431.8 mm (11 x 17 in.)	√	√	X

[1] Loads only in short-edge orientation.

[2] Loads only in long-edge orientation.

[3] Supports paper sizes ranging from 139.7 x 181.86 mm (5.5 x 7.16 in.) to 296.93 x 431.8 mm (11.69 x 17 in.).

Paper size	Optional 520-sheet tray, optional 520-sheet tray with cabinet, and optional 3 x 520-sheet tray	Optional 2520-sheet tandem tray	Optional 2000-sheet tray
Legal[1] 215.9 x 355.6 mm (8.5 x 14 in.)	√	√	X
Letter 215.9 x 279.4 mm (8.5 x 11 in.)	√	√	√[2]
Oficio (Mexico)[1] 215.9 x 340.4 mm (8.5 x 13.4 in.)	√	√	X
Statement[1] 139.7 x 215.9 mm (5.5 x 8.5 in.)	√	√	X
Universal	√[3]	√[3]	√[3]
7 3/4 Envelope 98.4 x 190.5 mm (3.875 x 7.5 in.)	X	X	X
9 Envelope 98.4 x 225.4 mm (3.875 x 8.9 in.)	X	X	X
10 Envelope 104.8 x 241.3 mm (4.12 x 9.5 in.)	X	X	X
B5 Envelope 176 x 250 mm (6.93 x 9.84 in.)	X	X	X
C5 Envelope 162 x 229 mm (6.38 x 9.01 in.)	X	X	X
DL Envelope 110 x 220 mm (4.33 x 8.66 in.)	X	X	X

[1] Loads only in short-edge orientation.

[2] Loads only in long-edge orientation.

[3] Supports paper sizes ranging from 139.7 x 181.86 mm (5.5 x 7.16 in.) to 296.93 x 431.8 mm (11.69 x 17 in.).

Paper sizes supported by the output bins

Paper size	Standard bin		Upper bin
	Stack	Offset	Stack
A3[1] 297 x 420 mm (11.69 x 16.54 in.)	✓	✓	✓
A4 210 x 297 mm (8.27 x 11.7 in.)	✓	✓	✓
A5 148 x 210 mm (5.83 x 8.27 in.)	✓	✓	✓
A6[1] 105 x 148 mm (4.13 x 5.83 in.)	✓	✓	✓
Executive 184.2 x 266.7 mm (7.25 x 10.5 in.)	✓	✓	✓
Folio[1] 215.9 x 330.2 mm (8.5 x 13 in.)	✓	✓	✓
Hagaki[1] 100 x 148 mm (3.94 x 5.83 in.)	✓	✓	✓
JIS B4[1] 257 x 364 mm (10.12 x 14.33 in.)	✓	✓	✓
JIS B5 182 x 257 mm (7.17 x 10.1 in.)	✓	✓	✓
Ledger[1] 279.4 x 4431.8 mm (11 x 17 in.)	✓	✓	✓

[1] Loads only in short-edge orientation.

[2] Loads only in long-edge orientation.

[3] Supports paper sizes ranging from 88.9 x 98.38 mm (3.5 x 3.87 in.) to 296.93 x 482.6 mm (11.69 x 19 in.).

[4] Supports paper sizes ranging from 88.9 x 98.38 mm (3.5 x 3.87 in.) to 296.93 x 431.8 mm (11.69 x 17 in.).

Paper size	Standard bin		Upper bin
	Stack	Offset	Stack
Legal[1] 215.9 x 355.6 mm (8.5 x 14 in.)	√	√	√
Letter 215.9 x 279.4 mm (8.5 x 11 in.)	√	√	√
Oficio (Mexico)[1] 215.9 x 340.4 mm (8.5 x 13.4 in.)	√	√	√
Statement 139.7 x 215.9 mm (5.5 x 8.5 in.)	√	√	√
Universal	√[3]	√[4]	X
7 3/4 Envelope[2] 98.4 x 190.5 mm (3.875 x 7.5 in.)	√	√	√
9 Envelope[2] 98.4 x 225.4 mm (3.875 x 8.9 in.)	√	√	√
10 Envelope[2] 104.8 x 241.3 mm (4.12 x 9.5 in.)	√	√	√
B5 Envelope[2] 176 x 250 mm (6.93 x 9.84 in.)	√	√	√
C5 Envelope[2] 162 x 229 mm (6.38 x 9.01 in.)	√	√	√
DL Envelope[2] 110 x 220 mm (4.33 x 8.66 in.)	√	√	√

[1] Loads only in short-edge orientation.

[2] Loads only in long-edge orientation.

[3] Supports paper sizes ranging from 88.9 x 98.38 mm (3.5 x 3.87 in.) to 296.93 x 482.6 mm (11.69 x 19 in.).

[4] Supports paper sizes ranging from 88.9 x 98.38 mm (3.5 x 3.87 in.) to 296.93 x 431.8 mm (11.69 x 17 in.).

Paper sizes supported by the finishers

Paper size	Staple finisher			Staple, hole punch finisher			
	Stack	Offset	Staple	Stack	Offset	Staple	Hole punch
A3[1] 297 x 420 mm (11.69 x 16.54 in.)	√	√	√	√	√	√	√
A4 210 x 297 mm (8.27 x 11.7 in.)	√	√	√	√	√	√	√
A5 148 x 210 mm (5.83 x 8.27 in.)	√	√[2]	X	√	√[2]	√[2]	√[6]
A6 105 x 148 mm (4.13 x 5.83 in.)	√	X	X	√	X	X	X
Banner Maximum width: 215.9 mm (8.5 in.) Maximum length: 1320.8 mm (52 in.)	√[1]	X	X	√[1]	X	X	X
Executive 184.2 x 266.7 mm (7.25 x 10.5 in.)	√[2]	√[2]	√[2]	√	√[2]	√[2]	√[2]
Folio[1] 215.9 x 330.2 mm (8.5 x 13 in.)	√	√	√	√	√	√	√
Hagaki 100 x 148 mm (3.94 x 5.83 in.)	√	X	X	√	X	X	X

[1] Loads only in short-edge orientation.

[2] Loads only in long-edge orientation.

[3] Supports paper sizes ranging from 88.9 x 98.38 mm (3.5 x 3.87 in.) to 296.93 x 431.8 mm (11.69 x 17 in.).

[4] Supports paper sizes ranging from 190 x 139.7 mm (7.48 x 5.5 in.) to 296.93 x 431.8 mm (11.69 x 17 in.).

[5] Supports paper sizes ranging from 202.9 x 182.03 mm (7.99 x 7.17 in.) to 296.93 x 431.8 mm (11.69 x 17 in.).

[6] Supports only up to 2-hole punching.

[7] Supports only up to 2-hole punching when loaded in short-edge orientation.

[8] Supports paper sizes ranging from 88.9 x 98.38 mm (3.5 x 3.87 in.) to 320.04 x 1320.8 mm (12.6 x 52 in.).

[9] Supports paper sizes ranging from 209.97 x 148 mm (8.27 x 5.83 in.) to 296.93 x 431.8 mm (11.69 x 17 in.).

Paper size	Staple finisher			Staple, hole punch finisher			
	Stack	Offset	Staple	Stack	Offset	Staple	Hole punch
JIS B4[1] 257 x 364 mm (10.12 x 14.33 in.)	√	√	√	√	√	√	√
JIS B5 182 x 257 mm (7.17 x 10.1 in.)	√	√[2]	√[2]	√	√[2]	√[2]	√[7]
Ledger[1] 279.4 x 4431.8 mm (11 x 17 in.)	√	√	√	√	√	√	√
Legal[1] 215.9 x 355.6 mm (8.5 x 14 in.)	√	√	√	√	√	√	√
Letter 215.9 x 279.4 mm (8.5 x 11 in.)	√	√	√	√	√	√	√
Oficio (Mexico)[1] 215.9 x 340.4 mm (8.5 x 13.4 in.)	√	√	√	√	√	√	√
Statement 139.7 x 215.9 mm (5.5 x 8.5 in.)	√	√[2]	X	X	X	X	X
Universal	√[3]	√[4]	√[5]	√[8]	√[9]	√[9]	X
7 3/4 Envelope 98.4 x 190.5 mm (3.875 x 7.5 in.)	√	X	X	X	X	X	X
9 Envelope 98.4 x 225.4 mm (3.875 x 8.9 in.)	√	X	X	X	X	X	X

[1] Loads only in short-edge orientation.

[2] Loads only in long-edge orientation.

[3] Supports paper sizes ranging from 88.9 x 98.38 mm (3.5 x 3.87 in.) to 296.93 x 431.8 mm (11.69 x 17 in.).

[4] Supports paper sizes ranging from 190 x 139.7 mm (7.48 x 5.5 in.) to 296.93 x 431.8 mm (11.69 x 17 in.).

[5] Supports paper sizes ranging from 202.9 x 182.03 mm (7.99 x 7.17 in.) to 296.93 x 431.8 mm (11.69 x 17 in.).

[6] Supports only up to 2-hole punching.

[7] Supports only up to 2-hole punching when loaded in short-edge orientation.

[8] Supports paper sizes ranging from 88.9 x 98.38 mm (3.5 x 3.87 in.) to 320.04 x 1320.8 mm (12.6 x 52 in.).

[9] Supports paper sizes ranging from 209.97 x 148 mm (8.27 x 5.83 in.) to 296.93 x 431.8 mm (11.69 x 17 in.).

Paper size	Staple finisher			Staple, hole punch finisher			
	Stack	Offset	Staple	Stack	Offset	Staple	Hole punch
10 Envelope 104.8 x 241.3 mm (4.12 x 9.5 in.)	√	X	X	X	X	X	X
B5 Envelope 176 x 250 mm (6.93 x 9.84 in.)	√[2]	X	X	X	X	X	X
C5 Envelope 162 x 229 mm (6.38 x 9.01 in.)	√[1]	X	X	X	X	X	X
DL Envelope 110 x 220 mm (4.33 x 8.66 in.)	√	X	X	X	X	X	X

[1] Loads only in short-edge orientation.

[2] Loads only in long-edge orientation.

[3] Supports paper sizes ranging from 88.9 x 98.38 mm (3.5 x 3.87 in.) to 296.93 x 431.8 mm (11.69 x 17 in.).

[4] Supports paper sizes ranging from 190 x 139.7 mm (7.48 x 5.5 in.) to 296.93 x 431.8 mm (11.69 x 17 in.).

[5] Supports paper sizes ranging from 202.9 x 182.03 mm (7.99 x 7.17 in.) to 296.93 x 431.8 mm (11.69 x 17 in.).

[6] Supports only up to 2-hole punching.

[7] Supports only up to 2-hole punching when loaded in short-edge orientation.

[8] Supports paper sizes ranging from 88.9 x 98.38 mm (3.5 x 3.87 in.) to 320.04 x 1320.8 mm (12.6 x 52 in.).

[9] Supports paper sizes ranging from 209.97 x 148 mm (8.27 x 5.83 in.) to 296.93 x 431.8 mm (11.69 x 17 in.).

Supported paper types

Supported paper types

Paper types supported by the standard tray, MPF, envelope tray, and two-sided printing

Paper type	Standard 520-sheet tray	Multipurpose feeder	Envelope tray	Two-sided printing
Bond	√	√	X	√
Card Stock	√	√	X	√
Colored Paper	√	√	X	√
Custom Type	√	√	X	√
Envelope	X	√	√	X
Glossy	√	√	X	√

Paper type	Standard 520-sheet tray	Multipurpose feeder	Envelope tray	Two-sided printing
Heavy Glossy	✓	✓	X	✓
Heavy Paper	✓	✓	X	✓
Labels	✓	✓	X	X
Letterhead	✓	✓	X	✓
Light Paper	✓	✓	X	✓
Plain Paper	✓	✓	X	✓
Preprinted	✓	✓	X	✓
Recycled	✓	✓	X	✓
Rough Envelope	X	✓	✓	X
Rough Cotton	✓	✓	X	✓
Vinyl Labels	X	X	X	X

Paper types supported by the optional trays

Paper type	Optional 520-sheet tray, optional 520-sheet tray with cabinet, and optional 3 x 520-sheet tray	Optional 2520-sheet tandem tray	Optional 2000-sheet tray
Bond	✓	✓	✓
Card Stock	✓	✓	✓
Colored Paper	✓	✓	✓
Custom Type	✓	✓	✓
Envelope	X	X	X
Glossy	✓	✓	✓
Heavy Glossy	✓	✓	✓
Heavy Paper	✓	✓	✓
Labels	✓	✓	✓
Letterhead	✓	✓	✓
Light Paper	✓	✓	✓
Plain Paper	✓	✓	✓
Preprinted	✓	✓	✓

Paper type	Optional 520-sheet tray, optional 520-sheet tray with cabinet, and optional 3 x 520-sheet tray	Optional 2520-sheet tandem tray	Optional 2000-sheet tray
Recycled	✓	✓	✓
Rough Envelope	X	X	X
Rough Cotton	✓	✓	✓
Vinyl Labels	X	X	X

Paper types supported by the output bins

Paper type	Standard bin		Upper bin
	Stack	Offset	Stack
Bond	✓	✓	✓
Card Stock	✓	✓	✓
Colored Paper	✓	✓	✓
Custom Type	✓	✓	✓
Envelope	✓	✓	✓
Glossy	✓	✓	✓
Heavy Glossy	✓	✓	✓
Heavy Paper	✓	✓	✓
Labels	✓	✓	✓
Letterhead	✓	✓	✓
Light Paper	✓	✓	✓
Plain Paper	✓	✓	✓
Preprinted	✓	✓	✓
Recycled	✓	✓	✓
Rough Envelope	✓	✓	✓
Rough Cotton	✓	✓	✓
Vinyl Labels	X	X	X

Paper types supported by the finishers

Paper type	Staple finisher			Staple, hole punch finisher			
	Stack	Offset	Staple	Stack	Offset	Staple	Hole punch
Bond	✓	✓	✓	✓	✓	✓	✓
Card Stock	✓	✓	X	✓	✓	X	✓
Colored Paper	✓	✓	✓	✓	✓	✓	✓
Custom Type	✓	✓	✓	✓	✓	✓	✓
Envelope	✓	X	X	X	X	X	X
Glossy	✓	✓	✓	✓	✓	✓	✓
Heavy Glossy	✓	✓	X	✓	✓	X	✓
Heavy Paper	✓	✓	X	✓	✓	X	✓
Labels	✓	✓	X	X	X	X	X
Letterhead	✓	✓	✓	✓	✓	✓	✓
Light Paper	✓	✓	✓	✓	✓	✓	✓
Plain Paper	✓	✓	✓	✓	✓	✓	✓
Preprinted	✓	✓	✓	✓	✓	✓	✓
Recycled	✓	✓	✓	✓	✓	✓	✓
Rough Envelope	✓	X	X	X	X	X	X
Rough Cotton	✓	✓	X	✓	✓	X	✓
Vinyl Labels	X	X	X	X	X	X	X

Supported paper weights

520-sheet tray, 520-sheet tray with cabinet, 3 x 520-sheet tray, and 2520-sheet tandem tray	Multipurpose feeder	Envelope tray	Optional 2000-sheet tray
60–256 g/m^2 (12–68 lb)	60–216 g/m^2 (12–57 lb)	75–90 g/m^2 (20–24 lb)	60–216 g/m^2 (12–57 lb)

Notes:

- For 60–176 g/m^2 (16–47-lb bond) paper, grain long fibers are recommended.
- Paper less than 75 g/m^2 (20-lb bond) must be printed with Paper Type set to Light Paper. Failure to do so may cause excessive curl which can lead to feeding errors, especially in more humid environments.
- Two-sided printing supports paper weight from 60–162 g/m^2 (16–43-lb bond) paper.

- 100% cotton content maximum weight is 90 g/m^2 (24-lb bond).

Lexmark CS943, CX942, CX943, CX944, XC9445, XC9455, XC9465 Printers and MFPs

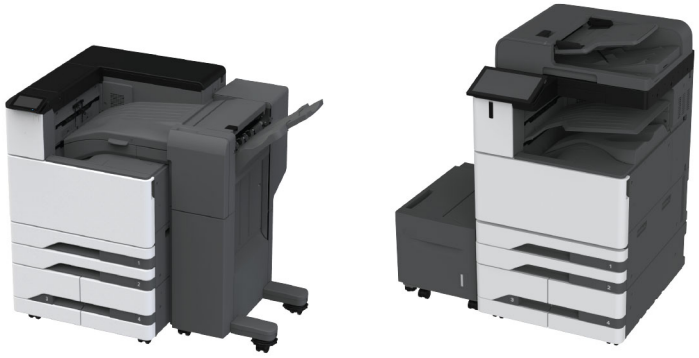

The following tables provide information on standard and optional paper sources and the sizes, types, and weights of paper that they support.

Note: For an unlisted paper size, select the closest *larger* listed size.

Supported paper sizes

Paper sizes supported by the standard tray, MPF, envelope tray, and two-sided printing

Paper size	Orientation	Standard 2 x 520-sheet tray	Multipurpose feeder	Envelope tray	Two-sided printing
A3 297 x 420 mm (11.69 x 16.54 in.)	Short-edge feed	✓	✓	X	✓
	Long-edge feed	X	X	X	X
A4 210 x 297 mm (8.27 x 11.7 in.)	Short-edge feed	✓	✓	X	✓
	Long-edge feed	✓	✓	X	✓
A5 148 x 210 mm (5.83 x 8.27 in.)	Short-edge feed	✓	✓	X	✓
	Long-edge feed	X	✓	X	✓
A6 105 x 148 mm (4.13 x 5.83 in.)	Short-edge feed	✓	✓	X	X
	Long-edge feed	X	X	X	X

[1] Supports paper sizes ranging from 100 x 297 mm (3.94 x 11.69 in.) to 320 x 457.2 mm (12.6 x 18 in.).

[2] Supports paper sizes ranging from 88.9 x 98.4 mm (3.5 x 3.87 in.) to 320.4 x 1320.8 mm (12.61 x 52 in.).

[3] Supports paper sizes ranging from 90 x 98.4 mm (3.54 x 3.87 in.) to 241.3 x 372 mm (9.5 x 14.65 in.).

[4] Supported only in tray 2.

Paper size	Orientation	Standard 2 x 520-sheet tray	Multipurpose feeder	Envelope tray	Two-sided printing
12x18 304.8 x 457.2 mm (12 x 18 in.)	Short-edge feed	✓[4]	✓	X	✓
	Long-edge feed	X	X	X	X
Executive 184.2 x 266.7 mm (7.25 x 10.5 in.)	Short-edge feed	✓	✓	X	✓
	Long-edge feed	✓	✓	X	✓
Folio 215.9 x 330.2 mm (8.5 x 13 in.)	Short-edge feed	✓	✓	X	✓
	Long-edge feed	X	X	X	X
Hagaki 100 x 148 mm (3.94 x 5.83 in.)	Short-edge feed	✓	✓	X	X
	Long-edge feed	X	X	X	X
JIS B4 257 x 364 mm (10.12 x 14.33 in.)	Short-edge feed	✓	✓	X	✓
	Long-edge feed	X	X	X	X
JIS B5 182 x 257 mm (7.17 x 10.1 in.)	Short-edge feed	✓	✓	X	✓
	Long-edge feed	✓	✓	X	✓
Ledger 279.4 x 4431.8 mm (11 x 17 in.)	Short-edge feed	✓	✓	X	✓
	Long-edge feed	X	X	X	X
Legal 215.9 x 355.6 mm (8.5 x 14 in.)	Short-edge feed	✓	✓	X	✓
	Long-edge feed	X	X	X	X
Letter 215.9 x 279.4 mm (8.5 x 11 in.)	Short-edge feed	✓	✓	X	✓
	Long-edge feed	✓	✓	X	✓
Oficio (Mexico) 215.9 x 340.4 mm (8.5 x 13.4 in.)	Short-edge feed	✓	X	X	✓
	Long-edge feed	X	X	X	X
SRA3 A3+ 329 x 483 mm (12.9 x 19.02 in.)	Short-edge feed	✓[4]	✓	X	✓
	Long-edge feed	X	X	X	X

[1] Supports paper sizes ranging from 100 x 297 mm (3.94 x 11.69 in.) to 320 x 457.2 mm (12.6 x 18 in.).

[2] Supports paper sizes ranging from 88.9 x 98.4 mm (3.5 x 3.87 in.) to 320.4 x 1320.8 mm (12.61 x 52 in.).

[3] Supports paper sizes ranging from 90 x 98.4 mm (3.54 x 3.87 in.) to 241.3 x 372 mm (9.5 x 14.65 in.).

[4] Supported only in tray 2.

Paper size	Orientation	Standard 2 x 520-sheet tray	Multipurpose feeder	Envelope tray	Two-sided printing
Statement 139.7 x 215.9 mm (5.5 x 8.5 in.)	Short-edge feed	✓	✓	X	✓
	Long-edge feed	X	X	X	✓
Monarch 7 3/4 98.4 x 190.5 mm (3.875 x 7.5 in.)	Short-edge feed	X	X	X	X
	Long-edge feed	X	✓	✓	X
Envelope (Naganata #3) 120 x 235 mm (4.75 x 9.25 in.)	Short-edge feed	X	X	✓	X
	Long-edge feed	X	X	X	X
9 Envelope 98.4 x 225.4 mm (3.875 x 8.9 in.)	Short-edge feed	X	X	X	X
	Long-edge feed	X	✓	✓	X
Commercial #10 Envelope 104.8 x 241.3 mm (4.12 x 9.5 in.)	Short-edge feed	X	X	X	X
	Long-edge feed	X	✓	✓	X
B5 Envelope 176 x 250 mm (6.93 x 9.84 in.)	Short-edge feed	X	✓	✓	X
	Long-edge feed	X	X	X	X
Envelope (ISO C4) 229 x 324 mm (9 x 12.8 in.)	Short-edge feed	X	X	✓	X
	Long-edge feed	X	X	X	X
Envelope (ISO C5) 162 x 229 mm (6.38 x 9.01 in.)	Short-edge feed	X	X	X	X
	Long-edge feed	X	X	✓	X
DL Envelope 110 x 220 mm (4.33 x 8.66 in.)	Short-edge feed	X	X	X	X
	Long-edge feed	X	X	✓	X
Universal	N/A	✓[1]	✓[2]	✓[3]	X

[1] Supports paper sizes ranging from 100 x 297 mm (3.94 x 11.69 in.) to 320 x 457.2 mm (12.6 x 18 in.).

[2] Supports paper sizes ranging from 88.9 x 98.4 mm (3.5 x 3.87 in.) to 320.4 x 1320.8 mm (12.61 x 52 in.).

[3] Supports paper sizes ranging from 90 x 98.4 mm (3.54 x 3.87 in.) to 241.3 x 372 mm (9.5 x 14.65 in.).

[4] Supported only in tray 2.

Paper sizes supported by the optional trays

Paper size	Orientation	Optional 2 x 520-sheet tray	Optional 2000-sheet tandem tray	Optional 2000-sheet tray	Automatic document feeder
A3 297 x 420 mm (11.69 x 16.54 in.)	Short-edge feed	✓	X	X	✓
	Long-edge feed	X	X	X	X
A4 210 x 297 mm (8.27 x 11.7 in.)	Short-edge feed	✓	X	X	✓
	Long-edge feed	✓	✓	✓	✓
A5 148 x 210 mm (5.83 x 8.27 in.)	Short-edge feed	✓	X	X	✓
	Long-edge feed	X	X	X	✓
A6 105 x 148 mm (4.13 x 5.83 in.)	Short-edge feed	✓	X	X	X
	Long-edge feed	X	X	X	X
12x18 304.8 x 457.2 mm (12 x 18 in.)	Short-edge feed	✓	X	X	✓
	Long-edge feed	X	X	X	X
Executive 184.2 x 266.7 mm (7.25 x 10.5 in.)	Short-edge feed	✓	X	X	✓
	Long-edge feed	✓	✓	✓	✓
Folio 215.9 x 330.2 mm (8.5 x 13 in.)	Short-edge feed	✓	X	X	✓
	Long-edge feed	X	X	X	X
Hagaki 100 x 148 mm (3.94 x 5.83 in.)	Short-edge feed	✓	X	X	X
	Long-edge feed	X	X	X	X
JIS B4 257 x 364 mm (10.12 x 14.33 in.)	Short-edge feed	✓	X	X	✓
	Long-edge feed	X	X	X	X
JIS B5 182 x 257 mm (7.17 x 10.1 in.)	Short-edge feed	✓	X	X	✓
	Long-edge feed	✓	✓	✓	✓
Ledger 279.4 x 4431.8 mm (11 x 17 in.)	Short-edge feed	✓	X	X	✓
	Long-edge feed	X	X	X	X

[1] Supports paper sizes ranging from 100 x 148 mm (3.94 x 5.83 in.) to 320 x 457.2 mm (12.6 x 18 in.).

[2] Supports paper sizes ranging from 125 x 85 mm (4.92 x 3.35 in.) to 297 x 482.6 mm (11.69 x 19 in.).

Paper size	Orientation	Optional 2 x 520-sheet tray	Optional 2000-sheet tandem tray	Optional 2000-sheet tray	Automatic document feeder
Legal 215.9 x 355.6 mm (8.5 x 14 in.)	Short-edge feed	✓	X	X	✓
	Long-edge feed	X	X	X	X
Letter 215.9 x 279.4 mm (8.5 x 11 in.)	Short-edge feed	✓	X	X	✓
	Long-edge feed	✓	✓	✓	✓
Oficio (Mexico) 215.9 x 340.4 mm (8.5 x 13.4 in.)	Short-edge feed	✓	X	X	✓
	Long-edge feed	X	X	X	X
SRA3 A3+ 329 x 483 mm (12.9 x 19.02 in.)	Short-edge feed	✓	X	X	X
	Long-edge feed	X	X	X	X
Statement 139.7 x 215.9 mm (5.5 x 8.5 in.)	Short-edge feed	✓	X	X	✓
	Long-edge feed	X	X	X	✓
Monarch 7 3/4 98.4 x 190.5 mm (3.875 x 7.5 in.)	Short-edge feed	X	X	X	X
	Long-edge feed	X	X	X	X
Envelope (Naganata #3) 120 x 235 mm (4.75 x 9.25 in.)	Short-edge feed	X	X	X	X
	Long-edge feed	X	X	X	X
9 Envelope 98.4 x 225.4 mm (3.875 x 8.9 in.)	Short-edge feed	X	X	X	X
	Long-edge feed	X	X	X	X
Commercial #10 Envelope 104.8 x 241.3 mm (4.12 x 9.5 in.)	Short-edge feed	X	X	X	X
	Long-edge feed	X	X	X	X
B5 Envelope 176 x 250 mm (6.93 x 9.84 in.)	Short-edge feed	X	X	X	X
	Long-edge feed	X	X	X	X
Envelope (ISO C4) 229 x 324 mm (9 x 12.8 in.)	Short-edge feed	X	X	X	X
	Long-edge feed	X	X	X	X

[1] Supports paper sizes ranging from 100 x 148 mm (3.94 x 5.83 in.) to 320 x 457.2 mm (12.6 x 18 in.).

[2] Supports paper sizes ranging from 125 x 85 mm (4.92 x 3.35 in.) to 297 x 482.6 mm (11.69 x 19 in.).

Paper size	Orientation	Optional 2 x 520-sheet tray	Optional 2000-sheet tandem tray	Optional 2000-sheet tray	Automatic document feeder
C5 Envelope 162 x 229 mm (6.38 x 9.01 in.)	Short-edge feed	X	X	X	X
	Long-edge feed	X	X	X	X
DL Envelope 110 x 220 mm (4.33 x 8.66 in.)	Short-edge feed	X	X	X	X
	Long-edge feed	X	X	X	✓
Universal	N/A	✓[1]	X	X	✓[2]

[1] Supports paper sizes ranging from 100 x 148 mm (3.94 x 5.83 in.) to 320 x 457.2 mm (12.6 x 18 in.).

[2] Supports paper sizes ranging from 125 x 85 mm (4.92 x 3.35 in.) to 297 x 482.6 mm (11.69 x 19 in.).

Paper sizes supported by the output bins

Paper size	Output bin	Orientation	Standard bin		Dual catch bin	
			Stack	Offset	Stack	Offset
A3 297 x 420 mm (11.69 x 16.54 in.)	Standard bin	Short-edge feed	✓	✓	X	X
		Long-edge feed	X	X	X	X
	1	Short-edge feed	X	X	✓	✓
		Long-edge feed	X	X	X	X
A4 210 x 297 mm (8.27 x 11.7 in.)	Standard bin	Short-edge feed	✓	✓	X	X
		Long-edge feed	✓	✓	X	X
	1	Short-edge feed	X	X	✓	✓
		Long-edge feed	X	X	✓	✓
A5 148 x 210 mm (5.83 x 8.27 in.)	Standard bin	Short-edge feed	✓	✓	X	X
		Long-edge feed	✓	✓	X	X
	1	Short-edge feed	X	X	✓	✓
		Long-edge feed	X	X	✓	✓

Paper size	Output bin	Orientation	Standard bin		Dual catch bin	
			Stack	Offset	Stack	Offset
A6 105 x 148 mm (4.13 x 5.83 in.)	Standard bin	Short-edge feed	✓	✓	✓	✓
		Long-edge feed	✓	✓	✓	✓
	1	Short-edge feed	X	X	✓	✓
		Long-edge feed	X	X	✓	✓
12x18 304.8 x 457.2 mm (12 x 18 in.)	Standard bin	Short-edge feed	✓	X	X	X
		Long-edge feed	X	X	X	X
	1	Short-edge feed	X	X	✓	X
		Long-edge feed	X	X	X	X
Banner Max width: 215.9 mm (8.5 in.) Max length: 1320.8 mm (52 in.)	Standard bin	Short-edge feed	✓	X	X	X
		Long-edge feed	X	X	X	X
	1	Short-edge feed	X	X	✓	X
		Long-edge feed	X	X	X	X
Executive 184.2 x 266.7 mm (7.25 x 10.5 in.)	Standard bin	Short-edge feed	✓	✓	X	X
		Long-edge feed	✓	✓	X	X
	1	Short-edge feed	X	X	✓	✓
		Long-edge feed	X	X	✓	✓
Folio 215.9 x 330.2 mm (8.5 x 13 in.)	Standard bin	Short-edge feed	✓	✓	X	X
		Long-edge feed	X	X	X	X
	1	Short-edge feed	X	X	✓	✓
		Long-edge feed	X	X	X	X

Paper size	Output bin	Orientation	Standard bin		Dual catch bin	
			Stack	Offset	Stack	Offset
Hagaki 100 x 148 mm (3.94 x 5.83 in.)	Standard bin	Short-edge feed	✓	✓	X	X
		Long-edge feed	✓	✓	X	X
	1	Short-edge feed	X	X	✓	✓
		Long-edge feed	X	X	✓	✓
JIS B4 257 x 364 mm (10.12 x 14.33 in.)	Standard bin	Short-edge feed	✓	✓	X	X
		Long-edge feed	X	X	X	X
	1	Short-edge feed	X	X	✓	✓
		Long-edge feed	X	X	X	X
JIS B5 182 x 257 mm (7.17 x 10.1 in.)	Standard bin	Short-edge feed	✓	✓	X	X
		Long-edge feed	✓	✓	X	X
	1	Short-edge feed	X	X	✓	✓
		Long-edge feed	X	X	✓	✓
Ledger 279.4 x 4431.8 mm (11 x 17 in.)	Standard bin	Short-edge feed	✓	✓	X	X
		Long-edge feed	X	X	X	X
	1	Short-edge feed	X	X	✓	✓
		Long-edge feed	X	X	X	X
Legal 215.9 x 355.6 mm (8.5 x 14 in.)	Standard bin	Short-edge feed	✓	✓	X	X
		Long-edge feed	X	X	X	X
	1	Short-edge feed	X	X	✓	✓
		Long-edge feed	X	X	X	X

Paper size	Output bin	Orientation	Standard bin		Dual catch bin	
			Stack	Offset	Stack	Offset
Letter 215.9 x 279.4 mm (8.5 x 11 in.)	Standard bin	Short-edge feed	✓	✓	X	X
		Long-edge feed	✓	✓	X	X
	1	Short-edge feed	X	X	✓	✓
		Long-edge feed	X	X	✓	✓
Oficio (Mexico) 215.9 x 340.4 mm (8.5 x 13.4 in.)	Standard bin	Short-edge feed	✓	✓	X	X
		Long-edge feed	X	X	X	X
	1	Short-edge feed	X	X	✓	✓
		Long-edge feed	X	X	X	X
SRA3 320.04 x 449.58 mm (12.6 x 17.7 in.)	Standard bin	Short-edge feed	✓	X	X	X
		Long-edge feed	X	X	X	X
	1	Short-edge feed	X	X	✓	X
		Long-edge feed	X	X	X	X
Statement 139.7 x 215.9 mm (5.5 x 8.5 in.)	Standard bin	Short-edge feed	✓	✓	X	X
		Long-edge feed	✓	✓	X	X
	1	Short-edge feed	X	X	✓	✓
		Long-edge feed	X	X	✓	✓
Envelope (Monarch 7 3/4) 98.4 x 190.5 mm (3.875 x 7.5 in.)	Standard bin	Short-edge feed	✓	✓	X	X
		Long-edge feed	✓	✓	X	X
	1	Short-edge feed	X	X	✓	✓
		Long-edge feed	X	X	✓	✓

Paper size	Output bin	Orientation	Standard bin		Dual catch bin	
			Stack	Offset	Stack	Offset
Envelope (Naganata #3) 120 x 235 mm (4.75 x 9.25 in.)	Standard bin	Short-edge feed	✓	✓	X	X
		Long-edge feed	✓	✓	X	X
	1	Long-edge feed	X	X	✓	✓
		Short-edge feed	X	X	✓	✓
Envelope (Commercial #9) 98.4 x 225.4 mm (3.875 x 8.9 in.)	Standard bin	Short-edge feed	✓	✓	X	X
		Long-edge feed	✓	✓	X	X
	1	Short-edge feed	X	X	✓	✓
		Long-edge feed	X	X	✓	✓
Envelope (Commercial #10) 104.8 x 241.3 mm (4.12 x 9.5 in.)	Standard bin	Short-edge feed	✓	✓	X	X
		Long-edge feed	✓	✓	X	X
	1	Short-edge feed	X	X	✓	✓
		Long-edge feed	X	X	✓	✓
B5 Envelope 176 x 250 mm (6.93 x 9.84 in.)	Standard bin	Short-edge feed	X	X	X	X
		Long-edge feed	✓	✓	X	X
	1	Short-edge feed	X	X	X	X
		Long-edge feed	X	X	✓	✓
Envelope (ISO C4) 229 x 324 mm (9 x 12.8 in.)	Standard bin	Short-edge feed	✓	✓	X	X
		Long-edge feed	X	X	X	X
	1	Short-edge feed	X	X	✓	✓
		Long-edge feed	X	X	X	X

Paper size	Output bin	Orientation	Standard bin		Dual catch bin	
			Stack	Offset	Stack	Offset
Envelope (ISO C5) 162 x 229 mm (6.38 x 9.01 in.)	Standard bin	Short-edge feed	✓	✓	X	X
		Long-edge feed	X	X	X	X
	1	Short-edge feed	X	X	✓	✓
		Long-edge feed	X	X	X	X
DL Envelope 110 x 220 mm (4.33 x 8.66 in.)	Standard bin	Short-edge feed	✓	✓	X	X
		Long-edge feed	✓	✓	X	X
	1	Short-edge feed	X	X	✓	✓
		Long-edge feed	X	X	✓	✓

Paper sizes supported by the staple finisher and the staple, hole punch finisher

Paper size	Output bin	Orientation	Staple finisher			Staple, hole punch finisher			
			Stack	Offset	Staple	Stack	Offset	Staple	Hole punch
A3 297 x 420 mm (11.69 x 16.54 in.)	Standard bin	Short-edge feed	✓	✓	✓	✓	✓	✓	✓
		Long-edge feed	X	X	X	X	X	X	X
A4 210 x 297 mm (8.27 x 11.7 in.)	Standard bin	Short-edge feed	✓	✓	✓	✓	✓	✓	✓
		Long-edge feed	✓	✓	✓	✓	✓	✓	✓
A5 148 x 210 mm (5.83 x 8.27 in.)	Standard bin	Short-edge feed	✓	X	X	✓	X	X	✓[1]
		Long-edge feed	✓	✓	X	✓	✓	✓	✓[1]
A6 105 x 148 mm (4.13 x 5.83 in.)	Standard bin	Short-edge feed	✓	X	X	✓	X	X	X
		Long-edge feed	X	X	X	X	X	X	X

[1] Supports only up to two-hole punching.

Paper size	Output bin	Orientation	Staple finisher			Staple, hole punch finisher			
			Stack	Offset	Staple	Stack	Offset	Staple	Hole punch
12x18 304.8 x 457.2 mm (12 x 18 in.)	Standard bin	Short-edge feed	X	X	X	✓	X	X	X
		Long-edge feed	X	X	X	X	X	X	X
Banner Max width: 215.9 mm (8.5 in.) Max length: 1320.8 mm (52 in.)	Standard bin	Short-edge feed	X	X	X	✓	X	X	X
		Long-edge feed	X	X	X	X	X	X	X
Executive 184.2 x 266.7 mm (7.25 x 10.5 in.)	Standard bin	Short-edge feed	✓	X	X	✓	X	X	X
		Long-edge feed	✓	✓	✓	✓	✓	✓	✓
Folio 215.9 x 330.2 mm (8.5 x 13 in.)	Standard bin	Short-edge feed	✓	✓	✓	✓	✓	✓	✓
		Long-edge feed	X	X	X	X	X	X	X
Hagaki 100 x 148 mm (3.94 x 5.83 in.)	Standard bin	Short-edge feed	✓	X	X	✓	X	X	X
		Long-edge feed	✓	X	X	✓	X	X	X
JIS B4 257 x 364 mm (10.12 x 14.33 in.)	Standard bin	Short-edge feed	✓	✓	✓	✓	✓	✓	✓
		Long-edge feed	X	X	X	X	X	X	X
JIS B5 182 x 257 mm (7.17 x 10.1 in.)	Standard bin	Short-edge feed	✓	X	X	✓	X	X	✓[1]
		Long-edge feed	✓	✓	✓	✓	✓	✓	✓
Ledger 279.4 x 4431.8 mm (11 x 17 in.)	Standard bin	Short-edge feed	✓	✓	✓	✓	✓	✓	✓
		Long-edge feed	X	X	X	X	X	X	X
Legal 215.9 x 355.6 mm (8.5 x 14 in.)	Standard bin	Short-edge feed	✓	✓	✓	✓	✓	✓	✓
		Long-edge feed	X	X	X	X	X	X	X

[1] Supports only up to two-hole punching.

Paper size	Output bin	Orientation	Staple finisher			Staple, hole punch finisher			
			Stack	Offset	Staple	Stack	Offset	Staple	Hole punch
Letter 215.9 x 279.4 mm (8.5 x 11 in.)	Standard bin	Short-edge feed	✓	✓	✓	✓	✓	✓	✓
		Long-edge feed	✓	✓	✓	✓	✓	✓	✓
Oficio (Mexico) 215.9 x 340.4 mm (8.5 x 13.4 in.)	Standard bin	Short-edge feed	✓	✓	✓	✓	✓	✓	✓
		Long-edge feed	X	X	X	X	X	X	X
SRA3 320.04 x 449.58 mm (12.6 x 17.7 in.)	Standard bin	Short-edge feed	X	X	X	✓	X	X	X
		Long-edge feed	X	X	X	X	X	X	X
Statement 139.7 x 215.9 mm (5.5 x 8.5 in.)	Standard bin	Short-edge feed	✓	X	X	X	X	X	X
		Long-edge feed	✓	✓	X	X	X	X	X
7 3/4 Envelope 98.4 x 190.5 mm (3.875 x 7.5 in.)	Standard bin	Short-edge feed	✓	X	X	X	X	X	X
		Long-edge feed	✓	X	X	✓	X	X	X
9 Envelope 98.4 x 225.4 mm (3.875 x 8.9 in.)	Standard bin	Short-edge feed	✓	X	X	X	X	X	X
		Long-edge feed	✓	X	X	✓	X	X	X
10 Envelope 104.8 x 241.3 mm (4.12 x 9.5 in.)	Standard bin	Short-edge feed	✓	X	X	X	X	X	X
		Long-edge feed	✓	X	X	✓	X	X	X
B5 Envelope 176 x 250 mm (6.93 x 9.84 in.)	Standard bin	Short-edge feed	X	X	X	X	X	X	X
		Long-edge feed	✓	X	X	✓	X	X	X
C5 Envelope 162 x 229 mm (6.38 x 9.01 in.)	Standard bin	Short-edge feed	X	X	X	✓	X	X	X
		Long-edge feed	X	X	X	X	X	X	X

[1] Supports only up to two-hole punching.

Paper size	Output bin	Orientation	Staple finisher			Staple, hole punch finisher			
			Stack	Offset	Staple	Stack	Offset	Staple	Hole punch
DL Envelope 110 x 220 mm (4.33 x 8.66 in.)	Standard bin	Short-edge feed	✓	X	X	X	X	X	X
		Long-edge feed	✓	X	X	✓	X	X	X

[1] Supports only up to two-hole punching.

Paper sizes supported by the trifold/Z-fold finisher and the booklet finisher

Paper size	Output bin	Orientation	Trifold/Z-fold finisher		Booklet finisher						
			Trifold	Z-fold	Stack	Offset	Staple	Hole punch	Booklet saddle staple	Booklet staple fold	Bifold single sheet
A3 297 x 420 mm (11.69 x 16.54 in.)	Standard bin	Short-edge feed	X	✓	✓	✓	X	✓	X	X	X
		Long-edge feed	X	X	X	X	X	X	X	X	X
	1	Short-edge feed	X	✓	✓	✓	✓	✓[2]	X	X	X
		Long-edge feed	X	X	X	X	X	X	X	X	X
	2	Short-edge feed	X	X	X	X	X	X	✓	✓	✓
		Long-edge feed	X	X	X	X	X	X	X	X	X
	3	Short-edge feed	X	X	X	X	X	X	X	X	X
		Long-edge feed	X	X	X	X	X	X	X	X	X

[1] Supports only up to two-hole punching.

[2] Supports double dual staples

Paper size	Output bin	Orientation	Trifold/Z-fold finisher		Booklet finisher						
			Trifold	Z-fold	Stack	Offset	Staple	Hole punch	Booklet saddle staple	Booklet staple fold	Bifold single sheet
A4 210 x 297 mm (8.27 x 11.7 in.)	Standard bin	Short-edge feed	X	X	✓	✓	X	✓	X	X	X
		Long-edge feed	X	X	✓	✓	X	✓	X	X	X
	1	Short-edge feed	X	X	✓	✓	✓	✓	X	X	X
		Long-edge feed	X	X	✓	✓	✓	✓[2]	X	X	X
	2	Short-edge feed	X	X	X	X	X	X	✓	✓	✓
		Long-edge feed	X	X	X	X	X	X	X	X	X
	3	Short-edge feed	✓	X	X	X	X	X	X	X	X
		Long-edge feed	X	X	X	X	X	X	X	X	X

[1] Supports only up to two-hole punching.

[2] Supports double dual staples

Paper size	Output bin	Orientation	Trifold/Z-fold finisher		Booklet finisher						
			Trifold	Z-fold	Stack	Offset	Staple	Hole punch	Booklet saddle staple	Booklet staple fold	Bifold single sheet
A5 148 x 210 mm (5.83 x 8.27 in.)	Standard bin	Short-edge feed	X	X	✓	X	X	X	X	X	X
		Long-edge feed	X	X	✓	X	X	✓[1]	X	X	X
	1	Short-edge feed	X	X	X	X	X	X	X	X	X
		Long-edge feed	X	X	X	X	X	✓[1]	X	X	X
	2	Short-edge feed	X	X	X	X	X	X	X	X	X
		Long-edge feed	X	X	X	X	X	X	X	X	X
	3	Short-edge feed	X	X	X	X	X	X	X	X	X
		Long-edge feed	X	X	X	X	X	X	X	X	X

[1] Supports only up to two-hole punching.

[2] Supports double dual staples

Paper size	Output bin	Orientation	Trifold/Z-fold finisher		Booklet finisher						
			Trifold	Z-fold	Stack	Offset	Staple	Hole punch	Booklet saddle staple	Booklet staple fold	Bifold single sheet
A6 105 x 148 mm (4.13 x 5.83 in.)	Standard bin	Short-edge feed	X	X	✓	X	X	X	X	X	X
		Long-edge feed	X	X	X	X	X	X	X	X	X
	1	Short-edge feed	X	X	X	X	X	X	X	X	X
		Long-edge feed	X	X	X	X	X	X	X	X	X
	2	Short-edge feed	X	X	X	X	X	X	X	X	X
		Long-edge feed	X	X	X	X	X	X	X	X	X
	3	Short-edge feed	X	X	X	X	X	X	X	X	X
		Long-edge feed	X	X	X	X	X	X	X	X	X

[1] Supports only up to two-hole punching.

[2] Supports double dual staples

Paper size	Output bin	Orientation	Trifold/Z-fold finisher		Booklet finisher						
			Trifold	Z-fold	Stack	Offset	Staple	Hole punch	Booklet saddle staple	Booklet staple fold	Bifold single sheet
12x18 304.8 x 457.2 mm (12 x 18 in.)	Standard bin	Short-edge feed	X	X	✓	X	X	X	X	X	X
		Long-edge feed	X	X	X	X	X	X	X	X	X
	1	Short-edge feed	X	X	✓	X	X	X	X	X	X
		Long-edge feed	X	X	✓	X	X	X	X	X	X
	2	Short-edge feed	X	X	X	X	X	X	✓	✓	✓
		Long-edge feed	X	X	X	X	X	X	X	X	X
	3	Short-edge feed	X	X	X	X	X	X	X	X	X
		Long-edge feed	X	X	X	X	X	X	X	X	X

[1] Supports only up to two-hole punching.

[2] Supports double dual staples

Paper size	Output bin	Orientation	Trifold/Z-fold finisher		Booklet finisher						
			Trifold	Z-fold	Stack	Offset	Staple	Hole punch	Booklet saddle staple	Booklet staple fold	Bifold single sheet
Banner Max width: 215.9 mm (8.5 in.) Max length: 1320.8 mm (52 in.)	Standard bin	Short-edge feed	X	X	✓	X	X	X	X	X	X
		Long-edge feed	X	X	X	X	X	X	X	X	X
	1	Short-edge feed	X	X	X	X	X	X	X	X	X
		Long-edge feed	X	X	X	X	X	X	X	X	X
	2	Short-edge feed	X	X	X	X	X	X	X	X	X
		Long-edge feed	X	X	X	X	X	X	X	X	X
		Short-edge feed	X	X	X	X	X	X	X	X	X
		Long-edge feed	X	X	X	X	X	X	X	X	X

[1] Supports only up to two-hole punching.

[2] Supports double dual staples

Paper size	Output bin	Orientation	Trifold/Z-fold finisher		Booklet finisher						
			Trifold	Z-fold	Stack	Offset	Staple	Hole punch	Booklet saddle staple	Booklet staple fold	Bifold single sheet
Executive 184.2 x 266.7 mm (7.25 x 10.5 in.)	Standard bin	Short-edge feed	X	X	✓	X	X	X	X	X	X
		Long-edge feed	X	X	✓	✓	X	✓	X	X	X
	1	Short-edge feed	X	X	✓	X	X	X	X	X	X
		Long-edge feed	X	X	✓	✓	✓	✓	X	X	X
	2	Short-edge feed	X	X	X	X	X	X	X	X	X
		Long-edge feed	X	X	X	X	X	X	X	X	X
	3	Short-edge feed	X	X	X	X	X	X	X	X	X
		Long-edge feed	X	X	X	X	X	X	X	X	X

[1] Supports only up to two-hole punching.

[2] Supports double dual staples

Paper size	Output bin	Orientation	Trifold/Z-fold finisher		Booklet finisher						
			Trifold	Z-fold	Stack	Offset	Staple	Hole punch	Booklet saddle staple	Booklet staple fold	Bifold single sheet
Folio 215.9 x 330.2 mm (8.5 x 13 in.)	Standard bin	Short-edge feed	X	X	✓	✓	X	✓	X	X	X
		Long-edge feed	X	X	X	X	X	X	X	X	X
	1	Short-edge feed	X	X	✓	✓	✓	✓	X	X	X
		Long-edge feed	X	X	X	X	X	X	X	X	X
	2	Short-edge feed	X	X	X	X	X	X	✓	✓	✓
		Long-edge feed	X	X	X	X	X	X	X	X	X
	3	Short-edge feed	X	X	X	X	X	X	X	X	X
		Long-edge feed	X	X	X	X	X	X	X	X	X

[1] Supports only up to two-hole punching.

[2] Supports double dual staples

Paper size	Output bin	Orientation	Trifold/Z-fold finisher		Booklet finisher						
			Trifold	Z-fold	Stack	Offset	Staple	Hole punch	Booklet saddle staple	Booklet staple fold	Bifold single sheet
Hagaki 100 x 148 mm (3.94 x 5.83 in.)	Standard bin	Short-edge feed	X	X	✓	X	X	X	X	X	X
		Long-edge feed	X	X	✓	X	X	X	X	X	X
	1	Short-edge feed	X	X	X	X	X	X	X	X	X
		Long-edge feed	X	X	X	X	X	X	X	X	X
	2	Short-edge feed	X	X	X	X	X	X	X	X	X
		Long-edge feed	X	X	X	X	X	X	X	X	X
	3	Short-edge feed	X	X	X	X	X	X	X	X	X
		Long-edge feed	X	X	X	X	X	X	X	X	X

[1] Supports only up to two-hole punching.

[2] Supports double dual staples

Paper size	Output bin	Orientation	Trifold/Z-fold finisher		Booklet finisher						
			Trifold	Z-fold	Stack	Offset	Staple	Hole punch	Booklet saddle staple	Booklet staple fold	Bifold single sheet
JIS B4 257 x 364 mm (10.12 x 14.33 in.)	Standard bin	Short-edge feed	X	✓	✓	✓	X	✓	X	X	X
		Long-edge feed	X	✓	X	X	X	X	X	X	X
	1	Short-edge feed	X	✓	✓	✓	✓[2]	✓	X	X	X
		Long-edge feed	X	✓	X	X	X	X	X	X	X
	2	Short-edge feed	X	X	X	X	X	X	✓	✓	✓
		Long-edge feed	X	X	X	X	X	X	X	X	X
	3	Short-edge feed	X	X	X	X	X	X	X	X	X
		Long-edge feed	X	X	X	X	X	X	X	X	X

[1] Supports only up to two-hole punching.

[2] Supports double dual staples

Paper size	Output bin	Orientation	Trifold/Z-fold finisher		Booklet finisher						
			Trifold	Z-fold	Stack	Offset	Staple	Hole punch	Booklet saddle staple	Booklet staple fold	Bifold single sheet
JIS B5 182 x 257 mm (7.17 x 10.1 in.)	Standard bin	Short-edge feed	X	X	✓	X	X	X	X	X	X
		Long-edge feed	X	X	✓	✓	X	✓	X	X	X
	1	Short-edge feed	X	X	✓	X	X	X	X	X	X
		Long-edge feed	X	X	✓	✓	✓[2]	✓	X	X	X
	2	Short-edge feed	X	X	X	X	X	X	✓	✓	✓
		Long-edge feed	X	X	X	X	X	X	X	X	X
	3	Short-edge feed	X	X	X	X	X	X	X	X	X
		Long-edge feed	X	X	X	X	X	X	X	X	X

[1] Supports only up to two-hole punching.

[2] Supports double dual staples

Paper size	Output bin	Orientation	Trifold/Z-fold finisher		Booklet finisher						
			Trifold	Z-fold	Stack	Offset	Staple	Hole punch	Booklet saddle staple	Booklet staple fold	Bifold single sheet
Ledger 279.4 x 4431.8 mm (11 x 17 in.)	Standard bin	Short-edge feed	X	✓	✓	✓	X	✓	X	X	X
		Long-edge feed	X	✓	X	X	X	X	X	X	X
	1	Short-edge feed	X	✓	✓	✓	✓[2]	✓	X	X	X
		Long-edge feed	X	✓	X	X	X	X	X	X	X
	2	Short-edge feed	X	X	X	X	X	X	✓	✓	✓
		Long-edge feed	X	X	X	X	X	X	X	X	X
	3	Short-edge feed	X	X	X	X	X	X	X	X	X
		Long-edge feed	X	X	X	X	X	X	X	X	X

[1] Supports only up to two-hole punching.

[2] Supports double dual staples

Paper size	Output bin	Orientation	Trifold/Z-fold finisher		Booklet finisher						
			Trifold	Z-fold	Stack	Offset	Staple	Hole punch	Booklet saddle staple	Booklet staple fold	Bifold single sheet
Legal 215.9 x 355.6 mm (8.5 x 14 in.)	Standard bin	Short-edge feed	X	X	✓	✓	X	✓	X	X	X
		Long-edge feed	X	X	X	X	X	X	X	X	X
	1	Short-edge feed	X	X	✓	✓	✓	✓	X	X	X
		Long-edge feed	X	X	X	X	X	X	X	X	X
	2	Short-edge feed	X	X	X	X	X	X	✓	✓	✓
		Long-edge feed	X	X	✓	✓	X	✓	X	X	X
	3	Short-edge feed	X	X	X	X	X	X	X	X	X
		Long-edge feed	X	X	X	X	X	X	X	X	X

[1] Supports only up to two-hole punching.

[2] Supports double dual staples

Paper size	Output bin	Orientation	Trifold/Z-fold finisher		Booklet finisher						
			Trifold	Z-fold	Stack	Offset	Staple	Hole punch	Booklet saddle staple	Booklet staple fold	Bifold single sheet
Letter 215.9 x 279.4 mm (8.5 x 11 in.)	Standard bin	Short-edge feed	X	✓	✓	✓	X	✓	X	X	X
		Long-edge feed	X	X	✓	✓	X	✓	X	X	X
	1	Short-edge feed	X	✓	✓	✓	✓	✓	X	X	X
		Long-edge feed	X	X	✓	✓	✓[2]	✓	X	X	X
	2	Short-edge feed	X	X	X	X	X	X	✓	✓	✓
		Long-edge feed	X	X	X	X	X	X	X	X	X
	3	Short-edge feed	✓	X	X	X	X	X	X	X	X
		Long-edge feed	X	X	X	X	X	X	X	X	X

[1] Supports only up to two-hole punching.

[2] Supports double dual staples

Paper size	Output bin	Orientation	Trifold/Z-fold finisher		Booklet finisher						
			Trifold	Z-fold	Stack	Offset	Staple	Hole punch	Booklet saddle staple	Booklet staple fold	Bifold single sheet
Oficio (Mexico) 215.9 x 340.4 mm (8.5 x 13.4 in.)	Standard bin	Short-edge feed	X	X	✓	✓	X	✓	X	X	X
		Long-edge feed	X	X	X	X	X	X	X	X	X
	1	Short-edge feed	X	X	✓	✓	✓	✓	X	X	X
		Long-edge feed	X	X	X	X	X	X	X	X	X
	2	Short-edge feed	X	X	X	X	X	X	✓	✓	✓
		Long-edge feed	X	X	X	X	X	X	X	X	X
	3	Short-edge feed	X	X	X	X	X	X	X	X	X
		Long-edge feed	X	X	X	X	X	X	X	X	X

[1] Supports only up to two-hole punching.

[2] Supports double dual staples

Paper size	Output bin	Orientation	Trifold/Z-fold finisher		Booklet finisher						
			Trifold	Z-fold	Stack	Offset	Staple	Hole punch	Booklet saddle staple	Booklet staple fold	Bifold single sheet
SRA3 320.04 x 449.58 mm (12.6 x 17.7 in.)	Standard bin	Short-edge feed	X	X	✓	X	X	X	X	X	X
		Long-edge feed	X	X	X	X	X	X	X	X	X
	1	Short-edge feed	X	X	✓	X	X	X	X	X	X
		Long-edge feed	X	X	X	X	X	X	X	X	X
	2	Short-edge feed	X	X	X	X	X	X	✓	✓	✓
		Long-edge feed	X	X	X	X	X	X	X	X	X
	3	Short-edge feed	X	X	X	X	X	X	X	X	X
		Long-edge feed	X	X	X	X	X	X	X	X	X

[1] Supports only up to two-hole punching.

[2] Supports double dual staples

Paper size	Output bin	Orientation	Trifold/Z-fold finisher		Booklet finisher						
			Trifold	Z-fold	Stack	Offset	Staple	Hole punch	Booklet saddle staple	Booklet staple fold	Bifold single sheet
Statement 139.7 x 215.9 mm (5.5 x 8.5 in.)	Standard bin	Short-edge feed	X	X	✓	X	X	X	X	X	X
		Long-edge feed	X	X	✓	X	X	X	X	X	X
	1	Short-edge feed	X	X	X	X	X	X	X	X	X
		Long-edge feed	X	X	X	X	X	X	X	X	X
	2	Short-edge feed	X	X	X	X	X	X	X	X	X
		Long-edge feed	X	X	X	X	X	X	X	X	X
	3	Short-edge feed	X	X	X	X	X	X	X	X	X
		Long-edge feed	X	X	X	X	X	X	X	X	X

[1] Supports only up to two-hole punching.

[2] Supports double dual staples

Paper size	Output bin	Orientation	Trifold/Z-fold finisher		Booklet finisher						
			Trifold	Z-fold	Stack	Offset	Staple	Hole punch	Booklet saddle staple	Booklet staple fold	Bifold single sheet
7 3/4 Envelope 98.4 x 190.5 mm (3.875 x 7.5 in.)	Standard bin	Short-edge feed	X	X	X	X	X	X	X	X	X
		Long-edge feed	X	X	✓	X	X	X	X	X	X
	1	Short-edge feed	X	X	X	X	X	X	X	X	X
		Long-edge feed	X	X	X	X	X	X	X	X	X
	2	Short-edge feed	X	X	X	X	X	X	X	X	X
		Long-edge feed	X	X	X	X	X	X	X	X	X
	3	Short-edge feed	X	X	X	X	X	X	X	X	X
		Long-edge feed	X	X	X	X	X	X	X	X	X

[1] Supports only up to two-hole punching.

[2] Supports double dual staples

Paper size	Output bin	Orientation	Trifold/Z-fold finisher		Booklet finisher						
			Trifold	Z-fold	Stack	Offset	Staple	Hole punch	Booklet saddle staple	Booklet staple fold	Bifold single sheet
9 Envelope 98.4 x 225.4 mm (3.875 x 8.9 in.)	Standard bin	Short-edge feed	X	X	X	X	X	X	X	X	X
		Long-edge feed	X	X	✓	X	X	X	X	X	X
	1	Short-edge feed	X	X	X	X	X	X	X	X	X
		Long-edge feed	X	X	X	X	X	X	X	X	X
	2	Short-edge feed	X	X	X	X	X	X	X	X	X
		Long-edge feed	X	X	X	X	X	X	X	X	X
	3	Short-edge feed	X	X	X	X	X	X	X	X	X
		Long-edge feed	X	X	X	X	X	X	X	X	X

[1] Supports only up to two-hole punching.

[2] Supports double dual staples

Paper size	Output bin	Orientation	Trifold/Z-fold finisher		Booklet finisher						
			Trifold	Z-fold	Stack	Offset	Staple	Hole punch	Booklet saddle staple	Booklet staple fold	Bifold single sheet
10 Envelope 104.8 x 241.3 mm (4.12 x 9.5 in.)	Standard bin	Short-edge feed	X	X	X	X	X	X	X	X	X
		Long-edge feed	X	X	✓	X	X	X	X	X	X
	1	Short-edge feed	X	X	X	X	X	X	X	X	X
		Long-edge feed	X	X	X	X	X	X	X	X	X
	2	Short-edge feed	X	X	X	X	X	X	X	X	X
		Long-edge feed	X	X	X	X	X	X	X	X	X
	3	Short-edge feed	X	X	X	X	X	X	X	X	X
		Long-edge feed	X	X	X	X	X	X	X	X	X

[1] Supports only up to two-hole punching.

[2] Supports double dual staples

Paper size	Output bin	Orientation	Trifold/Z-fold finisher		Booklet finisher						
			Trifold	Z-fold	Stack	Offset	Staple	Hole punch	Booklet saddle staple	Booklet staple fold	Bifold single sheet
B5 Envelope 176 x 250 mm (6.93 x 9.84 in.)	Standard bin	Short-edge feed	X	X	X	X	X	X	X	X	X
		Long-edge feed	X	X	✓	X	X	X	X	X	X
	1	Short-edge feed	X	X	X	X	X	X	X	X	X
		Long-edge feed	X	X	X	X	X	X	X	X	X
	2	Short-edge feed	X	X	X	X	X	X	X	X	X
		Long-edge feed	X	X	X	X	X	X	X	X	X
	3	Short-edge feed	X	X	X	X	X	X	X	X	X
		Long-edge feed	X	X	X	X	X	X	X	X	X

[1] Supports only up to two-hole punching.

[2] Supports double dual staples

Paper size	Output bin	Orientation	Trifold/Z-fold finisher		Booklet finisher						
			Trifold	Z-fold	Stack	Offset	Staple	Hole punch	Booklet saddle staple	Booklet staple fold	Bifold single sheet
C5 Envelope 162 x 229 mm (6.38 x 9.01 in.)	Standard bin	Short-edge feed	X	X	✓	X	X	X	X	X	X
		Long-edge feed	X	X	✓	X	X	X	X	X	X
	1	Short-edge feed	X	X	X	X	X	X	X	X	X
		Long-edge feed	X	X	X	X	X	X	X	X	X
	2	Short-edge feed	X	X	X	X	X	X	X	X	X
		Long-edge feed	X	X	X	X	X	X	X	X	X
	3	Short-edge feed	X	X	X	X	X	X	X	X	X
		Long-edge feed	X	X	X	X	X	X	X	X	X

[1] Supports only up to two-hole punching.

[2] Supports double dual staples

Paper size	Output bin	Orientation	Trifold/Z-fold finisher		Booklet finisher						
			Trifold	Z-fold	Stack	Offset	Staple	Hole punch	Booklet saddle staple	Booklet staple fold	Bifold single sheet
DL Envelope 110 x 220 mm (4.33 x 8.66 in.)	Standard bin	Short-edge feed	X	X	X	X	X	X	X	X	X
		Long-edge feed	X	X	✓	X	X	X	X	X	X
	1	Short-edge feed	X	X	X	X	X	X	X	X	X
		Long-edge feed	X	X	X	X	X	X	X	X	X
	2	Short-edge feed	X	X	X	X	X	X	X	X	X
		Long-edge feed	X	X	X	X	X	X	X	X	X
	3	Short-edge feed	X	X	X	X	X	X	X	X	X
		Long-edge feed	X	X	X	X	X	X	X	X	X

[1] Supports only up to two-hole punching.

[2] Supports double dual staples

Supported paper types

Paper types supported by the standard tray, MPF, envelope tray, and two-sided printing

Paper type	Standard 2 x 520-sheet tray	Multipurpose feeder	Envelope tray	Two-sided printing
Bond	✓	✓	X	✓
Card Stock	✓	✓	X	✓
Colored Paper	✓	✓	X	✓
Custom Type	✓	✓	X	✓

Paper type	Standard 2 x 520-sheet tray	Multipurpose feeder	Envelope tray	Two-sided printing
Envelope	X	✓	✓	X
Glossy	✓	✓	X	✓
Heavy Glossy	✓	✓	X	✓
Heavy Paper	✓	✓	X	✓
Labels	✓	✓	X	X
Letterhead	✓	✓	X	✓
Light Paper	✓	✓	X	✓
Plain Paper	✓	✓	X	✓
Preprinted	✓	✓	X	✓
Recycled	✓	✓	X	✓
Rough Envelope	X	✓	✓	X
Rough Cotton	✓	✓	X	✓
Transparencies	X	X	X	X
Vinyl Labels	X	X	X	X

Paper types supported by the optional trays

Paper type	Optional 2 x 520-sheet tray	Optional 2000-sheet tandem tray	Optional 2000-sheet tray
Bond	✓	✓	✓
Card Stock	✓	✓	✓
Colored Paper	✓	✓	✓
Custom Type	✓	✓	✓
Envelope	X	X	X
Glossy	✓	✓	✓
Heavy Glossy	✓	✓	✓
Heavy Paper	✓	✓	✓
Labels	✓	✓	✓
Letterhead	✓	✓	✓
Light Paper	✓	✓	✓

Paper type	Optional 2 x 520-sheet tray	Optional 2000-sheet tandem tray	Optional 2000-sheet tray
Plain Paper	✓	✓	✓
Preprinted	✓	✓	✓
Recycled	✓	✓	✓
Rough Envelope	X	X	X
Rough Cotton	✓	✓	✓
Transparencies	X	X	X
Vinyl Labels	X	X	X

Paper types supported by the output bins

Paper type	Standard bin		Dual catch bin
	Stack	Offset	Stack
Bond	✓	✓	✓
Card Stock	✓	✓	✓
Colored Paper	✓	✓	✓
Custom Type	✓	✓	✓
Envelope	✓	✓	✓
Glossy	✓	✓	✓
Heavy Glossy	✓	✓	✓
Heavy Paper	✓	✓	✓
Labels	✓	✓	✓
Letterhead	✓	✓	✓
Light Paper	✓	✓	✓
Plain Paper	✓	✓	✓
Preprinted	✓	✓	✓
Recycled	✓	✓	✓
Rough Envelope	✓	✓	✓
Rough Cotton	✓	✓	✓
Transparencies	X	X	X
Vinyl Labels	X	X	X

Paper types supported by the staple finisher and the staple, hole punch finisher

Paper type	Staple finisher			Staple, hole punch finisher			
	Stack	Offset	Staple	Stack	Offset	Staple	Hole punch
Bond	✓	✓	✓	✓	✓	✓	✓
Card Stock	✓	✓	X	✓	✓	X	✓
Colored Paper	✓	✓	✓	✓	✓	✓	✓
Custom Type	✓	✓	✓	✓	✓	✓	✓
Envelope	✓	X	X	X	X	X	X
Glossy	✓	✓	✓	✓	✓	✓	✓
Heavy Glossy	✓	✓	X	✓	✓	X	✓
Heavy Paper	✓	✓	X	✓	✓	X	✓
Labels	✓	✓	X	X	X	X	X
Letterhead	✓	✓	✓	✓	✓	✓	✓
Light Paper	✓	✓	✓	✓	✓	✓	✓
Plain Paper	✓	✓	✓	✓	✓	✓	✓
Preprinted	✓	✓	✓	✓	✓	✓	✓
Recycled	✓	✓	✓	✓	✓	✓	✓
Rough Envelope	✓	X	X	X	X	X	X
Rough Cotton	✓	✓	X	✓	✓	X	✓
Transparencies	X	X	X	X	X	X	X
Vinyl Labels	X	X	X	X	X	X	X

Paper types supported by the trifold/Z-fold finisher and the booklet finisher

Paper type	Trifold/Z-fold finisher		Booklet finisher				
	Trifold	Z-fold	Stack	Offset	Staple	Hole punch	Fold
Bond	✓	X	✓	✓	✓	✓	X
Card Stock	X	X	✓	✓	X	✓	X
Colored Paper	✓	✓	✓	✓	✓	✓	✓
Custom Type	✓	✓	✓	✓	✓	✓	✓
Envelope	X	X	X	X	X	X	X

Paper type	Trifold/Z-fold finisher		Booklet finisher				
	Trifold	Z-fold	Stack	Offset	Staple	Hole punch	Fold
Glossy	√	X	√	√	√	√	√
Heavy Glossy	X	X	√	√	X	√	X
Heavy Paper	X	X	√	√	X	√	X
Labels	X	X	X	X	X	X	X
Letterhead	X	X	√	√	√	√	√
Light Paper	√	√	√	√	√	√	√
Plain Paper	√	√	√	√	√	√	√
Preprinted	√	√	√	√	X	√	X
Recycled	√	√	√	√	√	√	√
Rough Envelope	X	X	X	X	X	X	X
Rough Cotton	X	X	√	√	X	√	X
Transparencies	X	X	X	X	X	X	X
Vinyl Labels	X	X	X	X	X	X	X

Notes:

- Labels, envelopes, and card stock always print at reduced speed.
- Card stock is supported in two-sided printing only up to 163 g/m^2 (90-lb bond). Anything heavier is supported only in one-sided printing.
- Vinyl labels are supported for occasional use only and must be tested for acceptability. Some vinyl labels may feed more reliably from the multipurpose feeder.

Supported paper weights

Standard or optional 2 x 520-sheet tray, and optional 2000-sheet tandem tray	Multipurpose feeder	Envelope tray	Optional 2000-sheet tray
60–256 g/m^2 (12–68-lb bond)	60–216 g/m^2 (12–57-lb bond)	75–90 g/m^2 (20–24-lb bond)	60–216 g/m^2 (12–57-lb bond)

Notes:

- For 60–176 g/m^2 (16–47-lb bond) paper, grain long fibers are recommended.
- Paper less than 75 g/m^2 (20-lb bond) must be printed with Paper Type set to Light Paper. Failure to do so may cause excessive curl which can lead to feeding errors, especially in more humid environments.
- Two-sided printing supports paper weight from 60–162 g/m^2 (16–43-lb bond) paper.

- 100% cotton content maximum weight is 90 g/m^2 (24-lb bond).

Lexmark C2326, CS431, C3426, CS439, CX431, MC3426, XC2326 Printers and MFPs



The following tables provide information on standard and optional paper sources and the sizes, types, and weights of paper that they support.

Note: For an unlisted paper size, select the closest *larger* listed size.

Supported paper sizes

Paper size	Standard or optional 250-sheet tray	Manual feeder	Two-sided printing	ADF	Scanner glass
A4 210 x 297 mm (8.27 x 11.7 in.)	✓	✓	✓	✓	✓
A5[1] 148 x 210 mm (5.83 x 8.27 in.)	✓	✓	X	✓	✓
A6 105 x 148 mm (4.13 x 5.83 in.)	✓	✓	X	✓	✓
JIS B5 182 x 257 mm (7.17 x 10.1 in.)	✓	✓	X	✓	✓

[1] The default support is long-edge feed. When running on short-edge feed, A5 is treated as narrow paper.

[2] When selected, the page is formatted for 215.90 x 355.60 mm (8.5 x 14 in.) unless specified by the software application.

[3] Load narrow paper with the short edge entering the printer first.

[4] Supports paper size only up to 216 x 297 mm (8.5 x 11.7 in.).

[5] The standard 250-sheet tray supports only up to five envelopes at a time. The optional 250-sheet tray supports up to 40 envelopes at a time.

Paper size	Standard or optional 250-sheet tray	Manual feeder	Two-sided printing	ADF	Scanner glass
Oficio (Mexico) 215.9 x 340.4 mm (8.5 x 13.4 in.)	✓	✓	✓	✓	X
Hagaki 100 x 148 mm (3.94 x 5.83 in.)	✓	✓	X	X	✓
Statement 139.7 x 215.9 mm (5.5 x 8.5 in.)	✓	✓	X	✓	✓
Executive 184.2 x 266.7 mm (7.25 x 10.5 in.)	✓	✓	X	✓	✓
Letter 215.9 x 279.4 mm (8.5 x 11 in.)	✓	✓	✓	✓	✓
Legal 215.9 x 355.6 mm (8.5 x 14 in.)	✓	✓	✓	✓	X
Folio 215.9 x 330.2 mm (8.5 x 13 in.)	✓	✓	✓	✓	X
Universal[2, 3] 98.4 x 148 mm (3.86 x 5.83 in.) to 215.9 x 355.6 mm (8.5 x 14 in.)	✓	✓	✓	✓	✓[4]
Universal[2, 3] 25.4 x 25.4 mm (1 x 1 in.) to 215.9 x 297 mm (8.5 x 11.69 in.)	X	X	X	X	✓

[1] The default support is long-edge feed. When running on short-edge feed, A5 is treated as narrow paper.

[2] When selected, the page is formatted for 215.90 x 355.60 mm (8.5 x 14 in.) unless specified by the software application.

[3] Load narrow paper with the short edge entering the printer first.

[4] Supports paper size only up to 216 x 297 mm (8.5 x 11.7 in.).

[5] The standard 250-sheet tray supports only up to five envelopes at a time. The optional 250-sheet tray supports up to 40 envelopes at a time.

Paper size	Standard or optional 250-sheet tray	Manual feeder	Two-sided printing	ADF	Scanner glass
Universal[2, 3] 105 x 148 mm (4.13 x 5.83 in.) to 215.9 x 355.6 mm (8.5 x 14 in.)	X	X	X	√	X
7 3/4 Envelope 98.4 x 190.5 mm (3.875 x 7.5 in.)	√[5]	√	X	X	√
9 Envelope 98.4 x 225.4 mm (3.875 x 8.9 in.)	√[5]	√	X	X	√
10 Envelope 104.8 x 241.3 mm (4.12 x 9.5 in.)	√[5]	√	X	X	√
DL Envelope 110 x 220 mm (4.33 x 8.66 in.)	√[5]	√	X	X	√
C5 Envelope 162 x 229 mm (6.38 x 9.01 in.)	√[5]	√	X	X	√
B5 Envelope 176 x 250 mm (6.93 x 9.84 in.)	√[5]	√	X	X	√
Other Envelope 98.4 x 162 mm (3.87 x 6.38 in.) to 176 x 250 mm (6.93 x 9.84 in.)	√[5]	√	X	X	N/A

[1] The default support is long-edge feed. When running on short-edge feed, A5 is treated as narrow paper.

[2] When selected, the page is formatted for 215.90 x 355.60 mm (8.5 x 14 in.) unless specified by the software application.

[3] Load narrow paper with the short edge entering the printer first.

[4] Supports paper size only up to 216 x 297 mm (8.5 x 11.7 in.).

[5] The standard 250-sheet tray supports only up to five envelopes at a time. The optional 250-sheet tray supports up to 40 envelopes at a time.

Supported paper types

Notes:

- Labels, envelopes, and card stock always print at reduced speed.
- Labels are supported for occasional use and must be tested for acceptability.

- The ADF supports only plain paper.

Paper type	Standard or optional 250-sheet tray	Manual feeder	Two-sided printing
Plain paper	✓	✓	✓
Card stock	✓	✓	X
Labels	✓	✓	X
Envelopes	✓	✓	X

Supported paper weights

Note: The ADF supports 52–90.3 g/m^2 (14–24 lb bond) paper.

Paper type and weight	Standard or optional 250-sheet tray	Manual feeder	Two-sided printing
Light paper 60–74.9 g/m^2 grain long (16–19.9-lb bond)	✓	✓	✓
Plain paper 75–90.3 g/m^2 grain long (20–24-lb bond)	✓	✓	✓
Heavy paper 90.3–105 g/m^2 grain long (24.1–28-lb bond)	✓	✓	✓
Card stock 105.1–162 g/m^2 grain long (28.1–43-lb bond)	✓	✓	X
Card stock 163–200 g/m^2 grain long (43.1–53-lb bond)	X	✓	X
Paper labels 131 g/m^2 (35-lb bond)	✓	✓	X
Envelopes 60–105 g/m^2 (16–28-lb bond)	✓	✓	X

Lexmark CS331, CX331, C3224, C3326, MC3224, MC3326 Printers and MFPs



The following tables provide information on standard and optional paper sources and the sizes, types, and weights of paper that they support.

Note: For an unlisted paper size, select the closest *larger* listed size.

Supported paper sizes

Paper size	250-sheet tray	Manual feeder	Two-sided printing	ADF	Scanner glass
A4 210 x 297 mm (8.27 x 11.7 in.)	✓	✓	✓	✓	✓
A5[1] 148 x 210 mm (5.83 x 8.27 in.)	✓	✓	X	✓	✓
A6 105 x 148 mm (4.13 x 5.83 in.)	✓	✓	X	✓	✓
JIS B5 182 x 257 mm (7.17 x 10.1 in.)	✓	✓	X	✓	✓
Oficio (Mexico) 215.9 x 340.4 mm (8.5 x 13.4 in.)	✓	✓	✓	✓	X
Hagaki 100 x 148 mm (3.94 x 5.83 in.)	✓	✓	X	X	✓
Statement 139.7 x 215.9 mm (5.5 x 8.5 in.)	✓	✓	X	✓	✓

[1] The default support is long-edge feed. When running on short-edge feed, A5 is treated as narrow paper.

[2] This paper source supports paper size only up to 216 x 297 mm (8.5 x 11.7 in.).

[3] When Universal is selected, the page is formatted for 215.90 x 355.60 mm (8.5 x 14 in.) unless specified by the software application.

[4] Load narrow paper with the short edge entering the printer first.

[5] Print only up to five envelopes at a time.

Paper size	250-sheet tray	Manual feeder	Two-sided printing	ADF	Scanner glass
Executive 184.2 x 266.7 mm (7.25 x 10.5 in.)	√	√	X	√	√
Letter 215.9 x 279.4 mm (8.5 x 11 in.)	√	√	√	√	√
Legal 215.9 x 355.6 mm (8.5 x 14 in.)	√	√	√	√	X
Folio 215.9 x 330.2 mm (8.5 x 13 in.)	√	√	√	√	X
Universal[3,4] 98.4 x 148 mm (3.86 x 5.83 in.) to 215.9 x 355.6 mm (8.5 x 14 in.)	√	√	√	√	√[2]
Universal[3,4] 25.4 x 25.4 mm (1 x 1 in.) to 215.9 x 297 mm (8.5 x 11.69 in.)	X	X	X	X	√
Universal[3,4] 105 x 148 mm (4.13 x 5.83 in.) to 215.9 x 355.6 mm (8.5 x 14 in.)	X	X	X	√	X
7 3/4 Envelope 98.4 x 190.5 mm (3.875 x 7.5 in.)	√[5]	√	X	X	√
9 Envelope 98.4 x 225.4 mm (3.875 x 8.9 in.)	√[5]	√	X	X	√
10 Envelope 104.8 x 241.3 mm (4.12 x 9.5 in.)	√[5]	√	X	X	√

[1] The default support is long-edge feed. When running on short-edge feed, A5 is treated as narrow paper.

[2] This paper source supports paper size only up to 216 x 297 mm (8.5 x 11.7 in.).

[3] When Universal is selected, the page is formatted for 215.90 x 355.60 mm (8.5 x 14 in.) unless specified by the software application.

[4] Load narrow paper with the short edge entering the printer first.

[5] Print only up to five envelopes at a time.

Paper size	250-sheet tray	Manual feeder	Two-sided printing	ADF	Scanner glass
DL Envelope 110 x 220 mm (4.33 x 8.66 in.)	√[5]	√	X	X	√
C5 Envelope 162 x 229 mm (6.38 x 9.01 in.)	√[5]	√	X	X	√
B5 Envelope 176 x 250 mm (6.93 x 9.84 in.)	√[5]	√	X	X	√
Other Envelope[3] 98.4 x 162 mm (3.87 x 6.38 in.) to 176 x 250 mm (6.93 x 9.84 in.)	√[5]	√	X	X	N/A

[1] The default support is long-edge feed. When running on short-edge feed, A5 is treated as narrow paper.

[2] This paper source supports paper size only up to 216 x 297 mm (8.5 x 11.7 in.).

[3] When Universal is selected, the page is formatted for 215.90 x 355.60 mm (8.5 x 14 in.) unless specified by the software application.

[4] Load narrow paper with the short edge entering the printer first.

[5] Print only up to five envelopes at a time.

Supported paper types

Notes:

- Labels, envelopes, and card stock always print at reduced speed.
- Labels are supported for occasional use and must be tested for acceptability.
- The ADF supports only plain paper.

Paper type	250-sheet tray	Manual feeder	Two-sided printing
Plain paper	√	√	√
Card stock	√	√	X
Labels	√	√	X
Envelopes	√	√	X

Supported paper weights

Note: The ADF supports 52–90.3 g/m^2 (14–24 lb bond) paper.

Paper type and weight	250-sheet tray	Manual feeder	Two-sided printing
Light paper 60–74.9 g/m^2 grain long (16–19.9-lb bond)	✓	✓	✓
Plain paper 75–90.3 g/m^2 grain long (20–24-lb bond)	✓	✓	✓
Heavy paper 90.3–105 g/m^2 grain long (24.1–28-lb bond)	✓	✓	✓
Card stock 105.1–162 g/m^2 grain long (28.1–43-lb bond)	✓	✓	X
Card stock 105.1–200 g/m^2 grain long (28.1–53-lb bond)	X	✓	X
Paper labels 131 g/m^2 (35-lb bond)	✓	✓	X
Envelopes 60–105 g/m^2 (16–28-lb bond)	✓	✓	X

Lexmark B2236 Printer and MB2236 MFP



The following tables provide information on standard and optional paper sources and the sizes, types, and weights of paper that they support.

Note: For an unlisted paper size, select the closest *larger* listed size.

Supported paper sizes

Notes:

- Paper less than 210 mm (8.3 in.) wide always prints at reduced speed.
- Use the manual feeder when printing on paper less than 105 mm (4.1 in.) wide.
- The minimum paper dimension supported for two-sided printing is 210 x 279.4 mm (8.3 x 11 in.).
- The maximum paper length supported by the scanner glass is 297 mm (11.7 in.).
- For two-sided printing on letter-, legal-, or folio-size paper, make sure that the paper size setting in the duplex unit is set to Letter.

Paper size	250-sheet tray	Manual feeder	Two-sided printing	Scanner glass	Automatic document feeder
A4 210 x 297 mm (8.27 x 11.7 in.)	✓	✓	✓	✓	✓
A5 (short edge feed) 148 x 210 mm (5.83 x 8.27 in.)	✓	✓	X	✓	✓
A5 (long edge feed) 210 x 148 mm (8.27 x 5.83 in.)	✓	✓	X	✓	✓
A6 105 x 148 mm (4.13 x 5.83 in.)	✓	✓	X	✓	✓
JIS B5 182 x 257 mm (7.17 x 10.1 in.)	✓	✓	X	✓	✓
Oficio (Mexico) 215.9 x 340.4 mm (8.5 x 13.4 in.)	✓	✓	X	X	✓
Hagaki 100 x 148 mm (3.94 x 5.83 in.)	X	✓	X	✓	X
Statement 139.7 x 215.9 mm (5.5 x 8.5 in.)	✓	✓	X	✓	✓
Executive 184.2 x 266.7 mm (7.25 x 10.5 in.)	✓	✓	X	✓	✓
Letter 215.9 x 279.4 mm (8.5 x 11 in.)	✓	✓	✓	✓	✓

* This paper source supports paper size only up to 216 x 297 mm (8.5 x 11.7 in.).

Paper size	250-sheet tray	Manual feeder	Two-sided printing	Scanner glass	Automatic document feeder
Legal 215.9 x 355.6 mm (8.5 x 14 in.)	√	√	√	X	√
Folio 215.9 x 330.2 mm (8.5 x 13 in.)	√	√	√	X	√
Universal 98 x 148 mm (3.9 x 5.8 in.) to 216 x 356 mm (8.5 x 14 in.)	X	√	X	√*	√
Universal 105 x 148 mm (4.1 x 5.8 in.) to 216 x 356 mm (8.5 x 14 in.)	√	√	X	√*	√
7 3/4 Envelope (Monarch) 98.4 x 190.5 mm (3.875 x 7.5 in.)	X	√	X	√	X
9 Envelope 98.4 x 225.4 mm (3.875 x 8.9 in.)	X	√	X	√	X
10 Envelope 104.8 x 241.3 mm (4.12 x 9.5 in.)	X	√	X	√	X
DL Envelope 110 x 220 mm (4.33 x 8.66 in.)	X	√	X	√	X
C5 Envelope 162 x 229 mm (6.38 x 9.01 in.)	X	√	X	√	X
B5 Envelope 176 x 250 mm (6.93 x 9.84 in.)	X	√	X	√	X
Universal Envelope 98.4 x 162 mm (3.87 x 6.38 in.) to 176 x 250 mm (6.93 x 9.84 in.)	X	√	X	√	X

* This paper source supports paper size only up to 216 x 297 mm (8.5 x 11.7 in.).

Supported paper types

Note: Labels, envelopes, and card stock always print at reduced speed.

Paper type	250-sheet tray	Manual feeder	Two-sided printing	Automatic document feeder
Plain paper	√	√	√	√
Card stock	X	√	X	X
Labels	X	√	X	X
Bond	√	√	√	√
Envelope	X	√	X	X
Letterhead	√	√	√	√
Preprinted	√	√	√	√
Colored paper	√	√	√	√
Light	√	√	√	√
Heavy	√	√	√	√
Recycled	√	√	√	√

Supported paper weights

250-sheet tray	Manual feeder	Two-sided printing	Automatic document feeder
60–105 g/m^2 (16–28-lb bond)	60–200 g/m^2 (16–54-lb bond)	70–105 g/m^2 (18.7–28-lb bond)	60–105 g/m^2 (16–28-lb bond)

Lexmark C2240, C2325, C2425, C2535, CS421, CS521, CS622, CX421, CX522, CX622, CX625, MC2325, MC2425, MC2535, MC2640, XC2235, XC4240 Printers and MFPs



The following tables provide information on standard and optional paper sources and the sizes, types, and weights of paper that they support.

Note: For an unlisted paper size, select the closest *larger* listed size.

Supported paper sizes

Note: Your printer model may have a 650-sheet duo tray, which consists of a 550-sheet tray and an integrated 100-sheet multipurpose feeder. The 550-sheet tray of the 650-sheet duo tray supports the same paper sizes as the optional 550-sheet tray. The integrated multipurpose feeder supports different paper sizes, types, and weights.

Paper size and dimension	Standard 250-sheet tray	Manual feeder	Optional 650-sheet duo tray		Optional 550-sheet tray	Two-sided printing
			550-sheet tray	Multipurpose feeder		
A4 210 x 297 mm (8.27 x 11.7 in.)	✓	✓	✓	✓	✓	✓
A5[1,2] 148 x 210 mm (5.83 x 8.27 in.)	✓	✓	✓	✓	✓	**X**

[1] Load this paper size into tray 1 and the manual feeder with the long edge entering the printer first.

[2] Load this paper size into tray 2, tray 3, and the multipurpose feeder with the short edge entering the printer first.

[3] When Universal is selected, the page is formatted for 215.9 x 355.6 mm (8.5 x 14 in.) unless the size is specified by the software application.

[4] Load narrow paper with the short edge entering the printer first.

[5] When Other Envelope is selected, the page is formatted for 215.9 x 355.6 mm (8.5 x 14 in.) unless the size is specified by the software application.

Paper size and dimension	Standard 250-sheet tray	Manual feeder	Optional 650-sheet duo tray		Optional 550-sheet tray	Two-sided printing
			550-sheet tray	Multipurpose feeder		
A6 105 x 148 mm (4.13 x 5.83 in.)	✓	✓	X	✓	X	X
JIS B5 182 x 257 mm (7.17 x 10.1 in.)	✓	✓	✓	✓	✓	X
Letter 215.9 x 279.4 mm (8.5 x 11 in.)	✓	✓	✓	✓	✓	✓
Legal 215.9 x 355.6 mm (8.5 x 14 in.)	✓	✓	✓	✓	✓	✓
Executive 184.2 x 266.7 mm (7.25 x 10.5 in.)	✓	✓	✓	✓	✓	X
Oficio (Mexico) 215.9 x 340.4 mm (8.5 x 13.4 in.)	✓	✓	✓	✓	✓	✓
Folio 215.9 x 330.2 mm (8.5 x 13 in.)	✓	✓	✓	✓	✓	✓
Statement 139.7 x 215.9 mm (5.5 x 8.5 in.)	✓	✓	X	✓	X	X
Hagaki 100 x 148 mm (3.94 x 5.83 in.)	✓	✓	X	✓	X	X
Universal[3,4] 98.4 x 148 mm to 215.9 x 355.6 mm (3.87 x 5.83 in. to 8.5 x 14 in.)	✓	✓	X	✓	X	X

[1] Load this paper size into tray 1 and the manual feeder with the long edge entering the printer first.

[2] Load this paper size into tray 2, tray 3, and the multipurpose feeder with the short edge entering the printer first.

[3] When Universal is selected, the page is formatted for 215.9 x 355.6 mm (8.5 x 14 in.) unless the size is specified by the software application.

[4] Load narrow paper with the short edge entering the printer first.

[5] When Other Envelope is selected, the page is formatted for 215.9 x 355.6 mm (8.5 x 14 in.) unless the size is specified by the software application.

Paper size and dimension	Standard 250-sheet tray	Manual feeder	Optional 650-sheet duo tray		Optional 550-sheet tray	Two-sided printing
			550-sheet tray	Multipurpose feeder		
Universal[3,4] 76.2 x 127 mm to 215.9 x 355.6 mm (3 x 5 in. to 8.5 x 14 in.)	X	✓	X	✓	X	X
Universal[3,4] 148 x 210 mm to 215.9 x 355.6 mm (5.83 x 8.27 in. to 8.5 x 14 in.)	✓	✓	✓	✓	✓	X
Universal[3,4] 210 x 250 mm to 215.9 x 355.6 mm (8.27 x 9.84 in. to 8.5 x 14 in.)	✓	✓	✓	✓	✓	✓
7 3/4 Envelope 98.4 x 190.5 mm (3.875 x 7.5 in.)	✓	✓	X	✓	X	X
9 Envelope 98.4 x 225.4 mm (3.875 x 8.9 in.)	✓	✓	X	✓	X	X
10 Envelope 104.8 x 241.3 mm (4.12 x 9.5 in.)	✓	✓	X	✓	X	X
DL Envelope 110 x 220 mm (4.33 x 8.66 in.)	✓	✓	X	✓	X	X
C5 Envelope 162 x 229 mm (6.38 x 9.01 in.)	✓	✓	X	✓	X	X
B5 Envelope 176 x 250 mm (6.93 x 9.84 in.)	✓	✓	X	✓	X	X

[1] Load this paper size into tray 1 and the manual feeder with the long edge entering the printer first.

[2] Load this paper size into tray 2, tray 3, and the multipurpose feeder with the short edge entering the printer first.

[3] When Universal is selected, the page is formatted for 215.9 x 355.6 mm (8.5 x 14 in.) unless the size is specified by the software application.

[4] Load narrow paper with the short edge entering the printer first.

[5] When Other Envelope is selected, the page is formatted for 215.9 x 355.6 mm (8.5 x 14 in.) unless the size is specified by the software application.

Paper size and dimension	Standard 250-sheet tray	Manual feeder	Optional 650-sheet duo tray		Optional 550-sheet tray	Two-sided printing
			550-sheet tray	Multipurpose feeder		
Monarch 98.425 x 190.5 mm (3.875 x 7.5 in.)	✓	✓	X	✓	X	X
Other Envelope[5] 98.4 x 162 mm to 176 x 250 mm (3.87 x 6.38 in. to 6.93 x 9.84 in.)	✓	✓	X	✓	X	X

[1] Load this paper size into tray 1 and the manual feeder with the long edge entering the printer first.

[2] Load this paper size into tray 2, tray 3, and the multipurpose feeder with the short edge entering the printer first.

[3] When Universal is selected, the page is formatted for 215.9 x 355.6 mm (8.5 x 14 in.) unless the size is specified by the software application.

[4] Load narrow paper with the short edge entering the printer first.

[5] When Other Envelope is selected, the page is formatted for 215.9 x 355.6 mm (8.5 x 14 in.) unless the size is specified by the software application.

Supported paper types

Notes:

- Your printer model may have a 650-sheet duo tray, which consists of a 550-sheet tray and an integrated 100-sheet multipurpose feeder. The 550-sheet tray of the 650-sheet duo tray supports the same paper type as the 550-sheet tray. The integrated multipurpose feeder supports different paper sizes, types, and weights.
- Labels, envelopes, and card stock always print at 25 pages per minute.
- The ADF supports only plain paper.

Paper type	Standard 250-sheet tray	Manual feeder	Optional 650-sheet duo tray		Optional 550-sheet tray	Two-sided printing
			550-sheet tray	Multipurpose feeder		
Plain paper	✓	✓	✓	✓	✓	✓
Card stock	✓	✓	✓	✓	✓	X
Envelopes	✓	✓	X	✓	X	X
Paper labels	✓	✓	✓	✓	✓	✓
Vinyl labels	✓	✓	✓	✓	✓	X

Supported paper weights

Supported paper weights

Notes:

- Your printer model may have a 650-sheet duo tray, which consists of a 550-sheet tray and an integrated 100-sheet multipurpose feeder. The 550-sheet tray of the 650-sheet duo tray supports the same paper types as the 550-sheet tray. The integrated multipurpose feeder supports different paper sizes, types, and weights.
- Labels, envelopes, and card stock always print at 25 pages per minute.
- The ADF supports 52–120 g/m^2 (14–32 lb bond) paper.

Paper type and weight	Standard 250-sheet tray	Manual feeder	Optional 650-sheet duo tray		Optional 550-sheet tray	Two-sided printing
			550-sheet tray	Multipurpose feeder		
Light paper[1] 60–74.9 g/m^2 grain long (16–19.9-lb bond)	✓	✓	✓	✓	✓	✓
Plain paper 75–90.3 g/m^2 grain long (20–24-lb bond)	✓	✓	✓	✓	✓	✓
Heavy paper 90.3–105 g/m^2 grain long (24.1–28-lb bond)	✓	✓	✓	✓	✓	✓
Card stock 105.1–162 g/m^2 grain long (28.1–43-lb bond)	✓	✓	✓	✓	✓	X
Card stock 105.1–200 g/m^2 grain long (28.1–53-lb bond)	✓	✓	X	X	X	X
Paper Labels[2] 131 g/m^2 (35-lb bond)	✓	✓	✓	✓	✓	✓[3]
Vinyl Labels[2] 131 g/m^2 (35-lb bond)	✓	✓	✓	✓	✓	X

[1] Paper less than 75 g/m^2 (20 lb) must be printed with Paper Type set to Light Paper. Failure to do so may cause excessive curl which can lead to feeding errors, especially in more humid environments.

[2] Labels and other specialty media are supported for occasional use and must be tested for acceptability.

[3] Paper labels up to 105 g/m^2 (28-lb bond) are supported.

[4] 100% cotton content maximum weight is 24-lb bond.

[5] 28-lb bond envelopes are limited to 25% cotton content.

Paper type and weight	Standard 250-sheet tray	Manual feeder	Optional 650-sheet duo tray		Optional 550-sheet tray	Two-sided printing
			550-sheet tray	Multipurpose feeder		
Envelopes[4,5] 60–105 g/m^2 (16–28-lb bond)	✓	✓	X	✓	X	X

[1] Paper less than 75 g/m^2 (20 lb) must be printed with Paper Type set to Light Paper. Failure to do so may cause excessive curl which can lead to feeding errors, especially in more humid environments.

[2] Labels and other specialty media are supported for occasional use and must be tested for acceptability.

[3] Paper labels up to 105 g/m^2 (28-lb bond) are supported.

[4] 100% cotton content maximum weight is 24-lb bond.

[5] 28-lb bond envelopes are limited to 25% cotton content.

Lexmark MS725 Printer and MX725 MFP



The following tables provide information on standard and optional paper sources and the sizes, types, and weights of paper that they support.

Note: For an unlisted paper size, select the closest *larger* listed size.

Supported paper sizes

Paper sizes supported by the printer

Paper size	Standard 550-sheet tray, optional 250- or 550-sheet tray	Optional 2100-sheet tray	Multipurpose feeder	Two-sided printing
A4 210 x 297 mm (8.3 x 11.7 in.)	✓	✓	✓	✓
A5 LEF* 210 x 148 mm (8.3 x 5.8 in.)	✓	✓	✓	✓
A5 SEF* 148 x 210 mm (5.8 x 8.3 in.)	✓	X	✓	X
A6 105 x 148 mm (4.1 x 5.8 in.)	✓	X	✓	✓
JIS B5 182 x 257 mm (7.2 x 10.1 in.)	✓	X	✓	✓
Oficio (Mexico) 216 x 340 mm (8.5 x 13.4 in.)	✓	✓	✓	✓
Statement 140 x 216 mm (5.5 x 8.5 in.)	✓	X	✓	✓
Executive 184 x 267 mm (7.3 x 10.5 in.)	✓	X	✓	✓
Letter 216 x 279 mm (8.5 x 11 in.)	✓	✓	✓	✓
Legal 216 x 356 mm (8.5 x 14 in.)	✓	✓	✓	✓
Folio 216 x 330 mm (8.5 x 13 in.)	✓	✓	✓	✓
Universal 105 x 148 mm (4.1 x 5.8 in.) to 216 x 356 mm (8.5 x 14 in.)	✓	X	✓	✓

* A5 long edge feed (LEF) is recommended over A5 short edge feed (SEF).

Paper sizes supported by the output options or finishers

Note: The output options and finishers are supported only in the Lexmark MS725 printer model.

Paper size	Output expander or high-capacity output expander	4-bin mailbox	Staple finisher		Staple, hole punch finisher		
			Stack	Staple	Stack	Staple	Hole punch
A4 210 x 297 mm (8.3 x 11.7 in.)	✓	✓	✓	✓	✓	✓	✓
A5 LEF 210 x 148 mm (8.3 x 5.8 in.)	✓	✓	✓	✓	✓	✓	X
A5 SEF 148 x 210 mm (5.8 x 8.3 in.)	✓	✓	✓	X	✓	X	X
A6 105 x 148 mm (4.1 x 5.8 in.)	✓	✓	X	X	X	X	X
JIS B5 182 x 257 mm (7.2 x 10.1 in.)	✓	✓	✓	X	✓	X	X
Oficio (Mexico) 216 x 340 mm (8.5 x 13.4 in.)	✓	✓	✓	✓	✓	✓	✓
Statement 140 x 216 mm (5.5 x 8.5 in.)	✓	✓	X	X	X	X	X
Executive 184 x 267 mm (7.3 x 10.5 in.)	✓	✓	✓	X	✓	X	X
Letter 216 x 279 mm (8.5 x 11 in.)	✓	✓	✓	✓	✓	✓	✓
Legal 216 x 356 mm (8.5 x 14 in.)	✓	✓	✓	✓	✓	✓	X
Folio 216 x 330 mm (8.5 x 13 in.)	✓	✓	✓	✓	✓	✓	✓
Universal 105 x 148 mm (4.1 x 5.8 in.) to 216 x 356 mm (8.5 x 14 in.)	✓	✓	X	X	X	X	X

Supported paper types

Paper types supported by the printer

Paper type	Standard 550-sheet tray, optional 250- or 550-sheet tray	Optional 2100-sheet tray	Multipurpose feeder	Two-sided printing
Plain paper	√	√	√	√
Card stock	√	X	√	√
Transparency*	√	X	√	X
Labels	√	X	√	X
Vinyl Labels	√	X	√	X
Bond	√	√	√	√
Letterhead	√	√	√	√
Preprinted	√	√	√	√
Colored Paper	√	X	√	√
Light	√	X	√	√
Heavy	√	X	√	√
Rough/Cotton	√	X	√	√
Custom Type [x]	√	X	√	√

* To prevent transparencies from sticking together, print up to 20 pages only. Print the succeeding pages after three minutes.

Paper types supported by the output options or finishers

Note: The output options and finishers are supported only in the Lexmark MS725 printer model.

Paper type	Output expander or high-capacity output expander	4-bin mailbox	Staple finisher		Staple, hole punch finisher		
			Stack	Staple	Stack	Staple	Hole punch
Plain paper	√	√	√	√	√	√	√
Card stock	√	X	X	X	X	X	X

Paper type	Output expander or high-capacity output expander	4-bin mailbox	Staple finisher		Staple, hole punch finisher		
			Stack	Staple	Stack	Staple	Hole punch
Transparencies	√	X	√	X	√	X	X
Labels	√	X	X	X	X	X	X
Vinyl Labels	√	X	X	X	X	X	X
Bond	√	√	√	√	√	√	√
Letterhead	√	√	√	√	√	√	√
Preprinted	√	√	√	√	√	√	√
Colored Paper	√	X	X	X	X	X	X
Light	√	X	X	X	X	X	X
Heavy	√	X	X	X	X	X	X
Rough/Cotton	√	X	X	X	X	X	X
Custom Type [x]	√	X	X	X	X	X	X

Supported paper weights

Paper weights supported by the printer

Paper type and weight	Standard 550-sheet tray, optional 250- or 550-sheet tray	Optional 2100-sheet tray	Multipurpose feeder	Two-sided printing
Plain paper or Bond[1] 60–176 g/m^2 grain long (16–47-lb bond)	√	√	√	√
Transparency 138–146 g/m^2 grain long (37–39-lb bond)	√	X	√	X

[1] Grain short is preferred for paper over 176 g/m^2 (47 lb).

[2] Pressure-sensitive area must enter the printer first.

[3] 28-lb bond envelopes are limited to 25% cotton content.

Paper type and weight	Standard 550-sheet tray, optional 250- or 550-sheet tray	Optional 2100-sheet tray	Multipurpose feeder	Two-sided printing
Integrated forms[2] 140–175 g/m^2 (37–47-lb bond)	✓	X	✓	✓
Integrated forms 75–135 g/m^2 (20–36-lb bond)	✓	X	✓	✓

[1] Grain short is preferred for paper over 176 g/m^2 (47 lb).

[2] Pressure-sensitive area must enter the printer first.

[3] 28-lb bond envelopes are limited to 25% cotton content.

Paper weights supported by the output options or finishers

Note: The output options and finishers are supported only in the Lexmark MS725 printer model.

Paper type and weight	Output expander or high-capacity output expander	4-bin mailbox	Staple finisher		Staple, hole punch finisher		
			Stack	Staple	Stack	Staple	Hole punch
Plain paper or Bond 60–176 g/m^2 grain long (16–47-lb bond)	✓	X	✓	X	✓	X	X
Plain paper or Bond 60–90 g/m^2 grain long (16–24-lb bond)	✓	✓	✓	✓	✓	✓	✓
Card stock 203 g/m^2 grain long (125-lb bond)	✓	X	✓	X	✓	X	X
Card stock 199 g/m^2 grain long (110-lb bond)	✓	X	✓	X	✓	X	X
Card stock 176 g/m^2 grain long (65-lb bond)	✓	X	X	X	X	X	X

Paper type and weight	Output expander or high-capacity output expander	4-bin mailbox	Staple finisher		Staple, hole punch finisher		
			Stack	Staple	Stack	Staple	Hole punch
Card stock 163 g/m² grain long (90-lb bond)	√	X	√	X	√	X	X
Transparency 138–146 g/m² grain long (37–39-lb bond)	√	X	√	X	√	X	X
Paper labels 180 g/m² (48-lb bond)	√	X	X	X	X	X	X
Integrated forms 140–175 g/m² (37–47-lb bond)	√	X	X	X	X	X	X
Integrated forms 75–135 g/m² (20–36-lb bond)	√	X	X	X	X	X	X

Card stock and label guidelines

Card stock and label weights support

The following media types are supported *only* in Lexmark MS725 and MX725 printer models.

- **Vinyl and polyester labels**
- **Narrow media batch jobs**

The following table lists the maximum weights supported by the trays and the multipurpose feeder.

Paper source	Card stock[1]			Labels			
	Index Bristol	Tag	Cover	Paper	Dual-web paper	Polyester	Vinyl
Standard and optional 550-sheet trays	199 g/m² (110 lb)	203 g/m² (125 lb)	176 g/m² (65 lb)	180 g/m²	180 g/m²	220 g/m²	300 g/m²
Multipurpose feeder[2]	199 g/m² (110 lb)	203 g/m² (125 lb)	176 g/m² (65 lb)	180 g/m²	180 g/m²	220 g/m²	260 g/m²

[1] See "Grain orientation" on page 16 for specific recommendations.

[2] Due to label design characteristics, unacceptable feeding may be experienced from the multipurpose feeder.

Labels	Thickness	0.102–0.305 mm (0.004–0.012 in.)
	Smoothness	100–400 Sheffield*
* 150–250 Sheffield is optimal. Using media higher than 300 Sheffield could result in printing degradation.		

Labels are one of the most difficult print materials for laser printers. Use a special fuser cleaner for label applications to optimize feed reliability and prevent duplexing.

It is recommended that you install the fuser oil cleaner, P/N 40X8579, when you run labels. When you order a new cartridge, make sure that it includes the correct fuser wiper.

It is possible to duplex certain labels that have been specifically designed for this application. To duplex labels, consult the Lexmark converter lists to see which converters have successfully developed this type of label. You must install the wax wiper, P/N 40X8581. Cartridges designed for duplex label printing contain two wax wipers. Change the wax wiper at the halfway point of your normal cartridge usage to provide extra cleaning and optimize performance. Contact your supplies and label specialist for information on oil and wax vinyl label cartridges.

Note: Wax wipers are not recommended when using vinyl labels.

Tray fill line information

Depending on construction, labels and card stock can sometimes be difficult to pick and feed reliably. Performance can be improved by controlling the number of sheets of media loaded in the tray. There are two fill lines in the tray. The solid line is the maximum paper fill indicator. No media should be loaded in the tray above this line or paper jams could occur. The dashed line is the alternate paper fill indicator and should be used if any feed or reliability issues are noted with specialty media, including labels and card stock. If paper jams occur when completely filling the tray, load the specialty media only up to the alternate paper fill indicator.



For more information on the printer models and feeding different types of media, contact your Lexmark sales representative.

When printing on labels:

- From the control panel, set the paper size, type, texture, and weight in the Paper menu to match the labels loaded in the tray.
- Do *not* load labels together with paper or transparencies in the same tray. Combining print materials can cause feeding problems.
- Use full label sheets. Partial sheets may cause labels to peel off during printing, resulting in a paper jam. Adhesive material may contaminate your printer. It could also void your printer and cartridge warranties.

During printing, the number of labels per sheet can affect registration more than basis weight. Typically, the more labels per sheet, the better the registration.

When printing on card stock:

- From the control panel, set the paper size, type, texture, and weight in the Paper menu to match the card stock loaded in the tray.
- Do *not* use card stock that is creased. It may cause paper jams.

For more information, see the following:

- “Pick roller technology” on page 10
- “Grain orientation” on page 16
- “Maintenance procedures” on page 24
- “Troubleshooting” on page 27
- “Primary rib pattern design guidelines for reference edge alignment” on page 25

Lexmark B2865, M5255, M5270, MS821, MS822, MS823, MS825, MS826 Printers



The following tables provide information on standard and optional paper sources and the sizes, types, and weights of paper that they support.

Note: For an unlisted paper size, select the closest *larger* listed size.

Supported paper sizes

Paper sizes supported by the printer

Paper size	Standard 550-sheet tray, optional 250- or 550-sheet tray	Optional 2100-sheet tray	Multipurpose feeder	Two-sided printing
A4 210 x 297 mm (8.3 x 11.7 in.)	✓	✓	✓	✓
A5 LEF[1] 210 x 148 mm (8.3 x 5.8 in.)	✓	✓	✓	✓
A5 SEF[1] 148 x 210 mm (5.8 x 8.3 in.)	✓	X	✓	X
A6 105 x 148 mm (4.1 x 5.8 in.)	✓	X	✓	✓
JIS B5 182 x 257 mm (7.2 x 10.1 in.)	✓	X	✓	✓
Oficio (Mexico) 216 x 340 mm (8.5 x 13.4 in.)	✓	✓	✓	✓
Statement 140 x 216 mm (5.5 x 8.5 in.)	✓	X	✓	✓
Executive 184 x 267 mm (7.3 x 10.5 in.)	✓	X	✓	✓
Letter 216 x 279 mm (8.5 x 11 in.)	✓	✓	✓	✓
Legal 216 x 356 mm (8.5 x 14 in.)	✓	✓	✓	✓
Folio 216 x 330 mm (8.5 x 13 in.)	✓	✓	✓	✓
Universal 76.2 x 127 mm to 216 x 356 mm (3 x 5 in. to 8.5 x 14 in.)	X	X	✓	X
Universal 105 x 148 mm (4.1 x 5.8 in.) to 216 x 356 mm (8.5 x 14 in.)	✓	X	✓	✓
7 3/4 Envelope (Monarch) 98 x 191 mm (3.9 x 7.5 in.)	✓	X	✓	X

[1] A5 long edge feed (LEF) is recommended over A5 short edge feed (SEF).

[2] Envelopes wider than 101.6 mm (4.5 in.) may crease. This paper type must be tested for acceptability.

Paper size	Standard 550-sheet tray, optional 250- or 550-sheet tray	Optional 2100-sheet tray	Multipurpose feeder	Two-sided printing
9 Envelope 98 x 225 mm (3.9 x 8.9 in.)	✓	X	✓	X
10 Envelope[2] 105 x 241 mm (4.1 x 9.5 in.)	✓	X	✓	X
DL Envelope[2] 110 x 220 mm (4.3 x 8.7 in.)	✓	X	✓	X
C5 Envelope[2] 162 x 229 mm (6.4 x 9 in.)	✓	X	✓	X
B5 Envelope[2] 176 x 250 mm (6.9 x 9.8 in.)	✓	X	✓	X
Other Envelope[2] 98.4 x 162 mm (3.9 x 6.4 in.) to 176 x 250 mm (6.9 x 9.8 in.)	✓	X	✓	X

[1] A5 long edge feed (LEF) is recommended over A5 short edge feed (SEF).

[2] Envelopes wider than 101.6 mm (4.5 in.) may crease. This paper type must be tested for acceptability.

Paper sizes supported by the output options or finishers

Paper size	Output expander, high-capacity output expander, or offset stacker	4-bin mailbox	Staple finisher		Staple, hole punch finisher		
			Stack	Staple	Stack	Staple	Hole punch
A4 210 x 297 mm (8.3 x 11.7 in.)	✓	✓	✓	✓	✓	✓	✓
A5 LEF 210 x 148 mm (8.3 x 5.8 in.)	✓	✓	✓	✓	✓	✓	X
A5 SEF 148 x 210 mm (5.8 x 8.3 in.)	✓	✓	✓	X	✓	X	X
A6 105 x 148 mm (4.1 x 5.8 in.)	✓	✓	X	X	X	X	X
JIS B5 182 x 257 mm (7.2 x 10.1 in.)	✓	✓	✓	X	✓	X	X

Paper size	Output expander, high-capacity output expander, or offset stacker	4-bin mailbox	Staple finisher		Staple, hole punch finisher		
			Stack	Staple	Stack	Staple	Hole punch
Oficio (Mexico) 216 x 340 mm (8.5 x 13.4 in.)	✓	✓	✓	✓	✓	✓	✓
Statement 140 x 216 mm (5.5 x 8.5 in.)	✓	✓	X	X	X	X	X
Executive 184 x 267 mm (7.3 x 10.5 in.)	✓	✓	✓	X	✓	X	X
Letter 216 x 279 mm (8.5 x 11 in.)	✓	✓	✓	✓	✓	✓	✓
Legal 216 x 356 mm (8.5 x 14 in.)	✓	✓	✓	✓	✓	✓	X
Folio 216 x 330 mm (8.5 x 13 in.)	✓	✓	✓	✓	✓	✓	✓
Universal 105 x 148 mm (4.1 x 5.8 in.) to 216 x 356 mm (8.5 x 14 in.)	✓	✓	X	X	X	X	X
Universal 76.2 x 127 mm to 216 x 356 mm (3 x 5 in. to 8.5 x 14 in.)	✓	X	X	X	X	X	X
7 3/4 Envelope (Monarch) 98 x 191 mm (3.9 x 7.5 in.)	✓	X	X	X	X	X	X
9 Envelope 98 x 225 mm (3.9 x 8.9 in.)	✓	X	X	X	X	X	X
10 Envelope 105 x 241 mm (4.1 x 9.5 in.)	✓	X	X	X	X	X	X

Paper size	Output expander, high-capacity output expander, or offset stacker	4-bin mailbox	Staple finisher		Staple, hole punch finisher		
			Stack	Staple	Stack	Staple	Hole punch
DL Envelope 110 x 220 mm (4.3 x 8.7 in.)	√	X	X	X	X	X	X
C5 Envelope 162 x 229 mm (6.4 x 9 in.)	√	X	X	X	X	X	X
B5 Envelope 176 x 250 mm (6.9 x 9.8 in.)	√	X	X	X	X	X	X
Other Envelopes 98.4 x 162 mm (3.9 x 6.4 in.) to 176 x 250 mm (6.9 x 9.8 in.)	√	X	X	X	X	X	X

Supported paper types

Paper types supported by the printer

Paper type	Standard 550-sheet tray, optional 250- or 550-sheet tray	Optional 2100-sheet tray	Multipurpose feeder	Two-sided printing
Plain paper	√	√	√	√
Card stock	√	X	√	√
Transparency*	√	X	√	X
Labels	√	X	√	X
Bond	√	√	√	√
Envelope	√	X	√	X
Rough envelope	√	X	√	X
Letterhead	√	√	√	√

* To prevent transparencies from sticking together, print up to 20 pages only. Print the succeeding pages after three minutes.

Paper type	Standard 550-sheet tray, optional 250- or 550-sheet tray	Optional 2100-sheet tray	Multipurpose feeder	Two-sided printing
Preprinted	√	√	√	√
Colored paper	√	X	√	√
Light	√	X	√	√
Heavy	√	X	√	√
Rough/Cotton	√	X	√	√
Custom type [x]	√	X	√	√

* To prevent transparencies from sticking together, print up to 20 pages only. Print the succeeding pages after three minutes.

Paper types supported by the output options or finishers

Paper type	Output expander or high-capacity output expander	4-bin mailbox	Staple finisher		Staple, hole punch finisher		
			Stack	Staple	Stack	Staple	Hole punch
Plain paper	√	√	√	√	√	√	√
Card stock	√	X	X	X	X	X	X
Transparencies	√	X	√	X	√	X	X
Labels	√	X	X	X	X	X	X
Bond	√	√	√	√	√	√	√
Envelope	√	X	X	X	X	X	X
Rough envelope	√	X	X	X	X	X	X
Letterhead	√	√	√	√	√	√	√
Preprinted	√	√	√	√	√	√	√
Colored paper	√	X	X	X	X	X	X
Light	√	X	X	X	X	X	X
Heavy	√	X	X	X	X	X	X

Paper type	Output expander or high-capacity output expander	4-bin mailbox	Staple finisher		Staple, hole punch finisher		
			Stack	Staple	Stack	Staple	Hole punch
Rough/Cotton	√	X	X	X	X	X	X
Custom type [x]	√	X	X	X	X	X	X

Supported paper weights

Paper weights supported by the printer

Paper type and weight	Standard 550-sheet tray, optional 250- or 550-sheet tray	Optional 2100-sheet tray	Multipurpose feeder	Two-sided printing
Plain paper or Bond[1] 60–176 g/m² grain long (16–47-lb bond)	√	√	√	√
Transparency 138–146 g/m² grain long (37–39-lb bond)	√	X	√	X
Integrated forms[2] 140–175 g/m² (37–47-lb bond)	√	X	√	√
Integrated forms 75–135 g/m² (20–36-lb bond)	√	X	√	√
Envelopes[3] 60–105 g/m² (16–28-lb bond)	√	X	√	√

[1] Grain short is preferred for paper over 176 g/m² (47 lb).

[2] Pressure-sensitive area must enter the printer first.

[3] 28-lb bond envelopes are limited to 25% cotton content.

Paper weights supported by the output options or finishers

Paper type and weight	Output expander or high-capacity output expander	4-bin mailbox	Staple finisher		Staple, hole punch finisher		
			Stack	Staple	Stack	Staple	Hole punch
Plain paper or Bond 60–176 g/m² grain long (16–47-lb bond)	✓	X	✓	X	✓	X	X
Plain paper or Bond 60–90 g/m² grain long (16–24-lb bond)	✓	✓	✓	✓	✓	✓	✓
Card stock 203 g/m² grain long (125-lb bond)	✓	X	✓	X	✓	X	X
Card stock 199 g/m² grain long (110-lb bond)	✓	X	✓	X	✓	X	X
Card stock 176 g/m² grain long (65-lb bond)	✓	X	X	X	X	X	X
Card stock 163 g/m² grain long (90-lb bond)	✓	X	✓	X	✓	X	X
Transparency 138–146 g/m² grain long (37–39-lb bond)	✓	X	✓	X	✓	X	X
Paper labels 180 g/m² (48-lb bond)	✓	X	X	X	X	X	X
Integrated forms 140–175 g/m² (37–47-lb bond)	✓	X	X	X	X	X	X
Integrated forms 75–135 g/m² (20–36-lb bond)	✓	X	X	X	X	X	X

Paper type and weight	Output expander or high-capacity output expander	4-bin mailbox	Staple finisher		Staple, hole punch finisher		
			Stack	Staple	Stack	Staple	Hole punch
Envelopes 60–105 g/m^2 (16–28-lb bond)	✓	X	X	X	X	X	X

Card stock and label guidelines

Card stock and label weights support

The following media types are *not* supported on this printer:

- **Vinyl and polyester labels**

  Printing these labels can lead to print quality problems and printer damage. For applications where these labels are run, use the Lexmark MS725 or MX725 printer model.

- **Narrow media batch jobs**

  When printing on paper less than 210 mm (8.3 inches) wide, the printer speed may decrease and throughput could substantially reduce. If you print large jobs on narrow paper regularly, use the Lexmark MS725 or MX725 printer model, which is designed to print batches of 10 or more pages of narrow paper at a faster speed. For more information, contact your Lexmark sales representative.

  Note: A5 default orientation is landscape, which is also called as LEF, and is not considered as narrow media.

The following table lists the maximum weights supported by the trays and the multipurpose feeder:

Paper source	Card stock[1]			Labels	
	Index Bristol	Tag	Cover	Paper	Dual-web paper
Standard and optional 550-sheet trays	199 g/m^2 (110 lb)	203 g/m^2 (125 lb)	176 g/m^2 (65 lb)	180 g/m^2	180 g/m^2
Multipurpose feeder[2]	199 g/m^2 (110 lb)	203 g/m^2 (125 lb)	176 g/m^2 (65 lb)	180 g/m^2	180 g/m^2

[1] See "Grain orientation" on page 16 for specific recommendations.

[2] Due to label design characteristics, unacceptable feeding may be experienced from the multipurpose feeder.

Labels	Thickness	0.102–0.305 mm (0.004–0.012 in.)
	Smoothness	100–400 Sheffield*

* 150–250 Sheffield is optimal. Using media higher than 300 Sheffield could result in printing degradation.

Tray fill line information

Depending on construction, paper labels and card stock can sometimes be difficult to pick and feed reliably. Performance can be improved by controlling the number of sheets of media loaded in the tray. There are two fill lines in the tray. The solid line is the maximum paper fill indicator. No media should be loaded in the tray above this line or paper jams could occur. The dashed line is the alternate paper fill indicator and should be used if any feed or reliability issues are noted with specialty media, including labels and card stock. If paper jams occur when completely filling the tray, load the specialty media only up to the alternate paper fill indicator.



For more information on the printer models and feeding different types of media, contact your Lexmark sales representative.

When printing on paper labels:

- From the control panel, set the paper size, type, texture, and weight in the Paper menu to match the labels loaded in the tray.
- Do *not* load labels together with paper or transparencies in the same paper tray. Combining print materials can cause feeding problems.
- Use full label sheets. Partial sheets may cause labels to peel off during printing, resulting in a paper jam. Adhesive material may contaminate your printer. It could also void your printer and cartridge warranties.

During printing, the number of labels per sheet can affect registration more than basis weight. Typically, the more labels per sheet, the better the registration.

When printing on card stock:

- From the control panel, set the paper size, type, texture, and weight in the Paper menu to match the card stock loaded in the tray.
- Do *not* use card stock that is creased. It may cause paper jams.

For more information, see the following:

- “Pick roller technology” on page 10
- “Grain orientation” on page 16
- “Maintenance procedures” on page 24
- “Troubleshooting” on page 27
- “Primary rib pattern design guidelines for reference edge alignment” on page 25

Lexmark MB2770, MX721, MX722, XM5365, XM5370 MFPs



The following tables provide information on standard and optional paper sources and the sizes, types, and weights of paper that they support.

Note: For an unlisted paper size, select the closest *larger* listed size.

Supported paper sizes

Paper size	Standard 550-sheet tray, optional 250- or 550-sheet tray	Optional 2100-sheet tray	Multipurpose feeder	Two-sided printing
A4 210 x 297 mm (8.3 x 11.7 in.)	√	√	√	√
A5 LEF[1] 210 x 148 mm (8.3 x 5.8 in.)	√	√	√	√
A5 SEF 148 x 210 mm (5.8 x 8.3 in.)	√	X	√	X
A6 105 x 148 mm (4.1 x 5.8 in.)	√	X	√	√
JIS B5 182 x 257 mm (7.2 x 10.1 in.)	√	X	√	√
Oficio (Mexico) 216 x 340 mm (8.5 x 13.4 in.)	√	√	√	√
Statement 140 x 216 mm (5.5 x 8.5 in.)	√	X	√	√
Executive 184 x 267 mm (7.3 x 10.5 in.)	√	X	√	√
Letter 216 x 279 mm (8.5 x 11 in.)	√	√	√	√

[1] A5 long edge feed (LEF) is recommended over A5 short edge feed (SEF).

[2] Envelopes wider than 101.6 mm (4.5 in.) may crease. This paper type must be tested for acceptability.

Paper size	Standard 550-sheet tray, optional 250- or 550-sheet tray	Optional 2100-sheet tray	Multipurpose feeder	Two-sided printing
Legal 216 x 356 mm (8.5 x 14 in.)	√	√	√	√
Folio 216 x 330 mm (8.5 x 13 in.)	√	√	√	√
Universal 105 x 148 mm (4.1 x 5.8 in.) to 216 x 356 mm (8.5 x 14 in.)	√	X	√	√
7 3/4 Envelope (Monarch) 98 x 191 mm (3.9 x 7.5 in.)	√	X	√	X
9 Envelope 98 x 225 mm (3.9 x 8.9 in.)	√	X	√	X
10 Envelope[2] 105 x 241 mm (4.1 x 9.5 in.)	√	X	√	X
DL Envelope[2] 110 x 220 mm (4.3 x 8.7 in.)	√	X	√	X
C5 Envelope[2] 162 x 229 mm (6.4 x 9 in.)	√	X	√	X
B5 Envelope[2] 176 x 250 mm (6.9 x 9.8 in.)	√	X	√	X
Other Envelope[2] 98.4 x 162 mm (3.9 x 6.4 in.) to 176 x 250 mm (6.9 x 9.8 in.)	√	X	√	X

[1] A5 long edge feed (LEF) is recommended over A5 short edge feed (SEF).

[2] Envelopes wider than 101.6 mm (4.5 in.) may crease. This paper type must be tested for acceptability.

Supported paper types

Paper type	Standard 550-sheet tray, optional 250- or 550-sheet tray	Optional 2100-sheet tray	Multipurpose feeder	Two-sided printing
Plain paper	√	√	√	√
Card stock	√	X	√	√
Transparency*	√	X	√	X

* To prevent transparencies from sticking together, print up to 20 pages only. Print the succeeding pages after three minutes.

Paper type	Standard 550-sheet tray, optional 250- or 550-sheet tray	Optional 2100-sheet tray	Multipurpose feeder	Two-sided printing
Labels	✓	X	✓	X
Bond	✓	✓	✓	✓
Envelope	✓	X	✓	X
Rough envelope	✓	X	✓	X
Letterhead	✓	✓	✓	✓
Preprinted	✓	✓	✓	✓
Colored paper	✓	X	✓	✓
Light	✓	X	✓	✓
Heavy	✓	X	✓	✓
Rough/Cotton	✓	X	✓	✓
Custom type [x]	✓	X	✓	✓

* To prevent transparencies from sticking together, print up to 20 pages only. Print the succeeding pages after three minutes.

Supported paper weights

Paper type and weight	Standard 550-sheet tray, optional 250- or 550-sheet tray	Optional 2100-sheet tray	Multipurpose feeder	Two-sided printing
Plain paper or Bond[1] 60–176 g/m^2 grain long (16–47-lb bond)	✓	✓	✓	✓
Card stock 203 g/m^2 grain long (125-lb bond)	✓	X	✓	✓

[1] Grain short is preferred for paper over 176 g/m^2 (47 lb).

[2]Pressure-sensitive area must enter the printer first.

[3] 28-lb bond envelopes are limited to 25% cotton content.

Paper type and weight	Standard 550-sheet tray, optional 250- or 550-sheet tray	Optional 2100-sheet tray	Multipurpose feeder	Two-sided printing
Card stock 199 g/m² grain long (110-lb bond)	✓	X	✓	✓
Card stock 176 g/m² grain long (65-lb bond)	✓	X	✓	✓
Transparency 138–146 g/m² grain long (37–39-lb bond)	✓	X	✓	X
Paper labels 180 g/m² (48-lb bond)	✓	X	✓	✓
Integrated forms[2] 140–175 g/m² (37–47-lb bond)	✓	X	✓	✓
Integrated forms 75–135 g/m² (20–36-lb bond)	✓	X	✓	✓
Envelopes[3] 60–105 g/m² (16–28-lb bond)	✓	X	✓	✓

[1] Grain short is preferred for paper over 176 g/m² (47 lb).

[2]Pressure-sensitive area must enter the printer first.

[3] 28-lb bond envelopes are limited to 25% cotton content.

Card stock and label guidelines

Card stock and label weights support

The following media types are not supported on this printer:

- **Vinyl and polyester labels**

  Printing these labels can lead to print quality problems and printer damage. For applications where these labels are run, use the Lexmark MS725 or MX725 printer model.

- **Narrow media batch jobs**

  When printing on paper less than 210 mm (8.3 inches) wide, the printer speed may decrease and throughput could substantially reduce. If you print large jobs on narrow paper regularly, use the Lexmark MS725 or MX725 printer model. This model is designed to print batches of 10 or more pages of narrow paper at a faster speed. For more information, contact your Lexmark sales representative.

  Note: A5 default orientation is landscape, which is also called as LEF, and is not considered as narrow media.

The following table lists the maximum weights supported by the trays and the multipurpose feeder:

Paper source	Card stock*			Labels	
	Index Bristol	Tag	Cover	Paper	Dual-web paper
Standard and optional 550-sheet trays	199 g/m^2 (110 lb)	203 g/m^2 (125 lb)	176 g/m^2 (65 lb)	180 g/m^2	180 g/m^2
Multipurpose feeder[2]	199 g/m^2 (110 lb)	203 g/m^2 (125 lb)	176 g/m^2 (65 lb)	180 g/m^2	180 g/m^2

* See "Grain orientation" on page 16 for specific recommendations.

[2] Due to label design characteristics, unacceptable feeding may be experienced from the multipurpose feeder.

Labels	Thickness	0.102–0.305 mm (0.004–0.012 in.)
	Smoothness	100–400 Sheffield*

* 150–250 Sheffield is optimal. Using media higher than 300 Sheffield could result in printing degradation.

Tray fill line information

Depending on construction, paper labels and card stock can sometimes be difficult to pick and feed reliably. Performance can be improved by controlling the number of sheets of media loaded in the tray. There are two fill lines in the tray. The solid line is the maximum paper fill indicator. No media should be loaded in the tray above this line or paper jams could occur. The dashed line is the alternate paper fill indicator. It should be used if any feed or reliability issues are noted with specialty media, including labels and card stock. If paper jams occur when completely filling the tray, load the specialty media only up to the alternate paper fill indicator.



For more information on the printer models and feeding different types of media, contact your Lexmark sales representative.

When printing on paper labels:

- From the control panel, set the paper size, type, texture, and weight in the Paper menu to match the labels loaded in the tray.
- Do not load labels together with paper or transparencies in the same paper tray. Combining print materials can cause feeding problems.
- Use full label sheets. Partial sheets may cause labels to peel off during printing, resulting in a paper jam. Adhesive material may contaminate your printer. It could also void your printer and cartridge warranties.

During printing, the number of labels per sheet can affect registration more than basis weight. Typically, the more labels per sheet, the better the registration.

When printing on card stock:

- From the control panel, set the paper size, type, texture, and weight in the Paper menu to match the card stock loaded in the tray.
- Do not use card stock that is creased. It may cause paper jams.

For more information, see the following:

- “Pick roller technology” on page 10
- “Grain orientation” on page 16
- “Maintenance procedures” on page 24
- “Troubleshooting” on page 27
- “Primary rib pattern design guidelines for reference edge alignment” on page 25

Lexmark MX822, MX826, XM7355, XM7370 MFPs



The following tables provide information on standard and optional paper sources and the sizes, types, and weights of paper that they support.

Note: For an unlisted paper size, select the closest *larger* listed size.

Supported paper sizes

Paper sizes supported by the printer

Paper size	Standard or optional 550-sheet tray	Optional 2100-sheet tray	Multipurpose feeder	Two-sided printing
A4 210 x 297 mm (8.3 x 11.7 in.)	✓	✓	✓	✓
A5 LEF[1] 210 x 148 mm (8.3 x 5.8 in.)	✓	✓	✓	✓
A5 SEF 148 x 210 mm (5.8 x 8.3 in.)	✓	X	✓	X
A6 105 x 148 mm (4.1 x 5.8 in.)	✓	X	✓	✓
JIS B5 182 x 257 mm (7.2 x 10.1 in.)	✓	X	✓	✓
Oficio (Mexico) 216 x 340 mm (8.5 x 13.4 in.)	✓	✓	✓	✓
Statement 140 x 216 mm (5.5 x 8.5 in.)	✓	X	✓	✓
Executive 184 x 267 mm (7.3 x 10.5 in.)	✓	X	✓	✓
Letter 216 x 279 mm (8.5 x 11 in.)	✓	✓	✓	✓
Legal 216 x 356 mm (8.5 x 14 in.)	✓	✓	✓	✓
Folio 216 x 330 mm (8.5 x 13 in.)	✓	✓	✓	✓
Universal 105 x 148 mm (4.1 x 5.8 in.) to 216 x 356 mm (8.5 x 14 in.)	✓	X	✓	✓
7 3/4 Envelope (Monarch) 98 x 191 mm (3.9 x 7.5 in.)	✓	X	✓	X
9 Envelope 98 x 225 mm (3.9 x 8.9 in.)	✓	X	✓	X
10 Envelope[2] 105 x 241 mm (4.1 x 9.5 in.)	✓	X	✓	X

[1] A5 long edge feed (LEF) is recommended over A5 short edge feed (SEF).

[2] Envelopes wider than 101.6 mm (4.5 in.) may crease. This paper type must be tested for acceptability.

Paper size	Standard or optional 550-sheet tray	Optional 2100-sheet tray	Multipurpose feeder	Two-sided printing
DL Envelope[2] 110 x 220 mm (4.3 x 8.7 in.)	√	X	√	X
C5 Envelope[2] 162 x 229 mm (6.4 x 9 in.)	√	X	√	X
B5 Envelope[2] 176 x 250 mm (6.9 x 9.8 in.)	√	X	√	X
Other Envelope[2] 98.4 x 162 mm (3.9 x 6.4 in.) to 176 x 250 mm (6.9 x 9.8 in.)	√	X	√	X

[1] A5 long edge feed (LEF) is recommended over A5 short edge feed (SEF).

[2] Envelopes wider than 101.6 mm (4.5 in.) may crease. This paper type must be tested for acceptability.

Paper sizes supported by the output options or finishers

Paper size	Offset stacker	4-bin mailbox	Staple finisher		Staple, hole punch finisher		
			Stack	Staple	Stack	Staple	Hole punch
A4 210 x 297 mm (8.3 x 11.7 in.)	√	√	√	√	√	√	√
A5 LEF 210 x 148 mm (8.3 x 5.8 in.)	√	√	√	√	√	√	X
A5 SEF 148 x 210 mm (5.8 x 8.3 in.)	√	√	√	X	√	X	X
A6 105 x 148 mm (4.1 x 5.8 in.)	√	√	X	X	X	X	X
JIS B5 182 x 257 mm (7.2 x 10.1 in.)	√	√	√	X	√	X	X
Oficio (Mexico) 216 x 340 mm (8.5 x 13.4 in.)	√	√	√	√	√	√	√
Statement 140 x 216 mm (5.5 x 8.5 in.)	√	√	√	X	√	X	X

Paper size	Offset stacker	4-bin mailbox	Staple finisher		Staple, hole punch finisher		
			Stack	Staple	Stack	Staple	Hole punch
Executive 184 x 267 mm (7.3 x 10.5 in.)	√	√	√	X	√	X	X
Letter 216 x 279 mm (8.5 x 11 in.)	√	√	√	√	√	√	√
Legal 216 x 356 mm (8.5 x 14 in.)	√	√	√	√	√	√	X
Folio 216 x 330 mm (8.5 x 13 in.)	√	√	√	√	√	√	√
Universal 105 x 148 mm (4.1 x 5.8 in.) to 216 x 356 mm (8.5 x 14 in.)	√	√	X	X	X	X	X
7 3/4 Envelope (Monarch) 98 x 191 mm (3.9 x 7.5 in.)	√	X	X	X	X	X	X
9 Envelope 98 x 225 mm (3.9 x 8.9 in.)	√	X	X	X	X	X	X
10 Envelope 105 x 241 mm (4.1 x 9.5 in.)	√	X	X	X	X	X	X
DL Envelope 110 x 220 mm (4.3 x 8.7 in.)	√	X	X	X	X	X	X
C5 Envelope 162 x 229 mm (6.4 x 9 in.)	√	X	X	X	X	X	X
B5 Envelope 176 x 250 mm (6.9 x 9.8 in.)	√	X	X	X	X	X	X
Other Envelopes 98.4 x 162 mm (3.9 x 6.4 in.) to 176 x 250 mm (6.9 x 9.8 in.)	√	X	X	X	X	X	X

Supported paper types

Paper types supported by the printer

Paper type	Standard or optional 550-sheet tray	Optional 2100-sheet tray	Multipurpose feeder	Two-sided printing
Plain paper	√	√	√	√
Card stock	√	X	√	√
Transparency*	√	X	√	X
Labels	√	X	√	X
Bond	√	√	√	√
Envelope	√	X	√	X
Rough envelope	√	X	√	X
Letterhead	√	√	√	√
Preprinted	√	√	√	√
Colored paper	√	X	√	√
Light	√	X	√	√
Heavy	√	X	√	√
Rough/Cotton	√	X	√	√
Custom type [x]	√	X	√	√

* To prevent transparencies from sticking together, print up to 20 pages only. Print the succeeding pages after three minutes.

Paper types supported by the output options or finishers

Paper type	Offset stacker	4-bin mailbox	Staple finisher		Staple, hole punch finisher		
			Stack	Staple	Stack	Staple	Hole punch
Plain paper	√	√	√	√	√	√	√
Card stock	√	X	X	X	X	X	X
Transparency	√	X	√	X	√	X	X

Paper type	Offset stacker	4-bin mailbox	Staple finisher		Staple, hole punch finisher		
			Stack	Staple	Stack	Staple	Hole punch
Labels	√	X	X	X	X	X	X
Bond	√	√	√	√	√	√	√
Envelope	√	X	X	X	X	X	X
Rough envelope	√	X	X	X	X	X	X
Letterhead	√	√	√	√	√	√	√
Preprinted	√	√	√	√	√	√	√
Colored paper	√	X	X	X	X	X	X
Light	√	X	X	X	X	X	X
Heavy	√	X	X	X	X	X	X
Rough/Cotton	√	X	X	X	X	X	X
Custom type [x]	√	X	X	X	X	X	X

Supported paper weights

Paper weights supported by the printer

Paper type and weight	Standard or optional 550-sheet tray	Optional 2100-sheet tray	Multipurpose feeder	Two-sided printing
Plain paper or Bond[1] 60–176 g/m^2 grain long (16–47-lb bond)	√	√	√	√
Card stock 203 g/m^2 grain long (125-lb bond)	√	X	√	√
Card stock 199 g/m^2 grain long (110-lb bond)	√	X	√	√

[1] Grain short is preferred for paper over 176 g/m^2 (47 lb).

[2] Pressure-sensitive area must enter the printer first.

[3] 28-lb bond envelopes are limited to 25% cotton content.

Paper type and weight	Standard or optional 550-sheet tray	Optional 2100-sheet tray	Multipurpose feeder	Two-sided printing
Card stock 176 g/m² grain long (65-lb bond)	✓	X	✓	✓
Transparency 138–146 g/m² grain long (37–39-lb bond)	✓	X	✓	X
Paper labels 180 g/m² (48-lb bond)	✓	X	✓	✓
Integrated forms[2] 140–175 g/m² (37–47-lb bond)	✓	X	✓	✓
Integrated forms 75–135 g/m² (20–36-lb bond)	✓	X	✓	✓
Envelopes[3] 60–105 g/m² (16–28-lb bond)	✓	X	✓	✓

[1] Grain short is preferred for paper over 176 g/m² (47 lb).

[2] Pressure-sensitive area must enter the printer first.

[3] 28-lb bond envelopes are limited to 25% cotton content.

Paper weights supported by the output options or finishers

Paper type and weight	Offset stacker	4-bin mailbox	Staple finisher		Staple, hole punch finisher		
			Stack	Staple	Stack	Staple	Hole punch
Plain paper or Bond 60–176 g/m² grain long (16–47-lb bond)	✓	X	✓	X	✓	X	X
Plain paper or Bond 60–90 g/m² grain long (16–24-lb bond)	✓	✓	✓	✓	✓	✓	✓
Card stock 203 g/m² grain long (125-lb bond)	✓	X	✓	X	✓	X	X

Paper type and weight	Offset stacker	4-bin mailbox	Staple finisher		Staple, hole punch finisher		
			Stack	Staple	Stack	Staple	Hole punch
Card stock 199 g/m² grain long (110-lb bond)	✓	X	✓	X	✓	X	X
Card stock 176 g/m² grain long (65-lb bond)	✓	X	X	X	X	X	X
Card stock 163 g/m² grain long (90-lb bond)	✓	X	✓	X	✓	X	X
Transparency 138–146 g/m² grain long (37–39-lb bond)	✓	X	✓	X	✓	X	X
Paper labels 180 g/m² (48-lb bond)	✓	X	X	X	X	X	X
Integrated forms 140–175 g/m² (37–47-lb bond)	✓	X	X	X	X	X	X
Integrated forms 75–135 g/m² (20–36-lb bond)	✓	X	X	X	X	X	X
Envelopes 60–105 g/m² (16–28-lb bond)	✓	X	X	X	X	X	X

Card stock and label guidelines

Card stock and label weights support

The following media types are not supported on this printer:

- **Vinyl and polyester labels**

  Printing these labels can lead to print quality problems and printer damage. For applications where these labels are run, use the Lexmark MS725 or MX725 printer model.

- **Narrow media batch jobs**

  When printing on paper less than 210 mm (8.3 inches) wide, the printer speed may decrease and throughput could substantially reduce. If you print large jobs on narrow paper regularly, use the Lexmark MS725 or MX725 printer model which is designed to print batches of 10 or more pages of narrow paper at a faster speed. For more information, contact your Lexmark sales representative.

  Note: A5 default orientation is landscape, which is also called as LEF, and is not considered as narrow media.

The following table lists the maximum weights supported by the trays and multipurpose feeder:

Paper source	Card stock[1]			Labels	
	Index Bristol	Tag	Cover	Paper	Dual-web paper
Standard and optional 550-sheet trays[1]	199 g/m^2 (110 lb)	203 g/m^2 (125 lb)	176 g/m^2 (65 lb)	180 g/m^2	180 g/m^2
Multipurpose feeder[2]	199 g/m^2 (110 lb)	203 g/m^2 (125 lb)	176 g/m^2 (65 lb)	180 g/m^2	180 g/m^2

[1] See "Grain orientation" on page 16 for specific recommendations.

[2] Due to label design characteristics, unacceptable feeding may be experienced from the multipurpose feeder.

Labels	Thickness	0.102–0.305 mm (0.004–0.012 in.)
	Smoothness	100–400 Sheffield*

* 150–250 Sheffield is optimal. Using media higher than 300 Sheffield could result in printing degradation.

Tray fill line information

Depending on construction, paper labels and card stock can sometimes be difficult to pick and feed reliably. Performance can be improved by controlling the number of sheets of media loaded in the tray. There are two fill lines in the tray. The solid line is the maximum paper fill indicator. No media should be loaded in the tray above this line or paper jams could occur. The dashed line is the alternate paper fill indicator and should be used if any feed or reliability issues are noted with specialty media, including labels and card stock. If paper jams occur when completely filling the tray, then load the specialty media only up to the alternate paper fill indicator.



For more information on the printer models and feeding different types of media, contact your Lexmark sales representative.

When printing on paper labels:

- From the control panel, set the paper size, type, texture, and weight in the Paper menu to match the labels loaded in the tray.
- Do not load labels together with paper or transparencies in the same paper tray. Combining print materials can cause feeding problems.
- Use full label sheets. Partial sheets may cause labels to peel off during printing, resulting in a paper jam. Adhesive material may contaminate your printer. It could also void your printer and cartridge warranties.

During printing, the number of labels per sheet can affect registration more than basis weight. Typically, the more labels per sheet, the better the registration.

When printing on card stock:

- From the control panel, set the paper size, type, texture, and weight in the Paper menu to match the card stock loaded in the tray.
- Do not use card stock that is creased. It may cause paper jams.

For more information, see the following:

- “Pick roller technology” on page 10
- “Grain orientation” on page 16
- “Maintenance procedures” on page 24
- “Troubleshooting” on page 27
- “Primary rib pattern design guidelines for reference edge alignment” on page 25

Lexmark B2338, B2442, B2546, B2650, M1242, M1246, M3250, MS321, MS421, MS521, MS621, MS622 Printers



The following tables provide information on standard and optional paper sources and the sizes, types, and weights of paper that they support.

Note: For an unlisted paper size, select the closest *larger* listed size.

Supported paper sizes

Paper size	Standard 550-sheet tray	Optional 250- or 550-sheet tray	Multipurpose feeder	Two-sided printing
A4 210 x 297 mm (8.3 x 11.7 in.)	√	√	√	√
A5 210 x 148 mm (8.3 x 5.8 in.)	√	√	√	X
A5 LEF 148 x 210 mm (5.8 x 8.3 in.)	√	X	√	X
A6 105 x 148 mm (4.1 x 5.8 in.)	√	X	√	X
JIS B5 182 x 257 mm (7.2 x 10.1 in.)	√	√	√	X

Paper size	Standard 550-sheet tray	Optional 250- or 550-sheet tray	Multipurpose feeder	Two-sided printing
Oficio (Mexico) 216 x 340 mm (8.5 x 13.4 in.)	✓	✓	✓	✓
Hagaki 100 x 148 mm (3.9 x 5.8 in.)	X	X	✓	X
Business card 50.8 x 88.9 mm (2 x 3.5 in.)	X	X	X	X
Statement 140 x 216 mm (5.5 x 8.5 in.)	✓	✓	✓	X
Executive 184 x 267 mm (7.3 x 10.5 in.)	✓	✓	✓	X
Letter 216 x 279 mm (8.5 x 11 in.)	✓	✓	✓	✓
Legal 216 x 356 mm (8.5 x 14 in.)	✓	✓	✓	✓
Folio 216 x 330 mm (8.5 x 13 in.)	✓	✓	✓	✓
Universal 76.2 x 127 mm to 216 x 356 mm (3 x 5 in. to 8.5 x 14 in.)	X	X	✓	X
Universal 105 x 148 mm to 216 x 356 mm (4.13 x 5.83 in. to 8.5 x 14 in.)	✓	X	X	X
Universal 148 x 210 mm to 216 x 356 mm (5.83 x 8.27 in. to 8.5 x 14 in.)	X	✓	X	X
7 3/4 Envelope (Monarch) 98 x 191 mm (3.9 x 7.5 in.)	X	X	✓	X

Paper size	Standard 550-sheet tray	Optional 250- or 550-sheet tray	Multipurpose feeder	Two-sided printing
9 Envelope 98 x 225 mm (3.9 x 8.9 in.)	X	X	√	X
10 Envelope 105 x 241 mm (4.1 x 9.5 in.)	X	X	√	X
DL Envelope 110 x 220 mm (4.3 x 8.7 in.)	X	X	√	X
C5 Envelope 162 x 229 mm (6.4 x 9 in.)	X	X	√	X
B5 Envelope 176 x 250 mm (6.9 x 9.8 in.)	X	X	√	X
Other Envelope 76.2 x 127 mm to 216 x 356 mm (3 x 5 in. to 8.5 x 14 in.)	X	X	√	X

Supported paper types

Paper type	Standard 550-sheet tray	Optional 250- or 550-sheet tray	Multipurpose feeder	Two-sided printing
Plain paper	√	√	√	√
Card stock	X	X	√	X
Transparency	√	X	√	X
Recycled	√	√	√	√
Paper labels[1]	√	√	√	X
Bond[2]	√	√	√	√

[1] One-sided paper labels designed for laser printers are supported for occasional use. It is recommended to print 20 or fewer pages of paper labels per month. Vinyl, pharmacy, and two-sided labels are not supported.

[2] Bond and Heavy paper are supported in two-sided printing up to 90-g/m^2 (24-lb) paper weight.

Paper type	Standard 550-sheet tray	Optional 250- or 550-sheet tray	Multipurpose feeder	Two-sided printing
Letterhead	√	√	√	√
Preprinted	√	√	√	√
Colored paper	√	√	√	√
Light paper	√	√	√	√
Heavy paper[2]	√	√	√	√
Rough/Cotton	√	√	√	√
Envelope	X	X	√	X
Rough envelope	X	X	√	X

[1] One-sided paper labels designed for laser printers are supported for occasional use. It is recommended to print 20 or fewer pages of paper labels per month. Vinyl, pharmacy, and two-sided labels are not supported.

[2] Bond and Heavy paper are supported in two-sided printing up to 90-g/m^2 (24-lb) paper weight.

Supported paper weights

Paper type	Tray	Multipurpose feeder	Two-sided printing
Plain paper	60–120 g/m^2 (16–32 lb)	60–216 g/m^2 (16–58 lb)	60–90 g/m^2 (16–24 lb)
Card stock	N/A	60–216 g/m^2 (16–58 lb)	N/A
Transparency	60–120 g/m^2 (16–32 lb)	60–216 g/m^2 (16–58 lb)	N/A
Labels*	60–120 g/m^2 (16–32 lb)	60–216 g/m^2 (16–58 lb)	N/A
Envelopes	N/A	N/A	N/A

* One-sided paper labels designed for laser printers are supported for occasional use. It is recommended to print 20 or fewer pages of paper labels per month. Vinyl, pharmacy, and two-sided labels are not supported.

Lexmark MB2338, MB2442, MX321, MX421, XM1242 MFPs



The following tables provide information on standard and optional paper sources and the sizes, types, and weights of paper that they support.

Note: For an unlisted paper size, select the closest *larger* listed size.

Supported paper sizes

Paper size	Standard 550-sheet tray	Optional 250- or 550-sheet tray	Multipurpose feeder	Two-sided printing	ADF	Scanner glass
A4 210 x 297 mm (8.3 x 11.7 in.)	✓	✓	✓	✓	✓	✓
A5 210 x 148 mm (8.3 x 5.8 in.)	✓	✓	✓	X	✓	✓
A5 LEF 148 x 210 mm (5.8 x 8.3 in.)	✓	X	✓	X	✓	✓
A6 105 x 148 mm (4.1 x 5.8 in.)	✓	X	✓	X	✓	✓
JIS B5 182 x 257 mm (7.2 x 10.1 in.)	✓	✓	✓	X	✓	✓
Oficio (Mexico) 216 x 340 mm (8.5 x 13.4 in.)	✓	✓	✓	✓	✓	✓
Hagaki 100 x 148 mm (3.9 x 5.8 in.)	X	X	✓	X	X	✓

Paper size	Standard 550-sheet tray	Optional 250- or 550-sheet tray	Multipurpose feeder	Two-sided printing	ADF	Scanner glass
Business card 50.8 x 88.9 mm (2 x 3.5 in.)	X	X	X	X	X	✓
Statement 140 x 216 mm (5.5 x 8.5 in.)	✓	✓	✓	X	✓	✓
Executive 184 x 267 mm (7.3 x 10.5 in.)	✓	✓	✓	X	✓	✓
Letter 216 x 279 mm (8.5 x 11 in.)	✓	✓	✓	✓	✓	✓
Legal 216 x 356 mm (8.5 x 14 in.)	✓	✓	✓	✓	✓	✓
Folio 216 x 330 mm (8.5 x 13 in.)	✓	✓	✓	✓	✓	✓
Universal 76.2 x 127 mm to 216 x 356 mm (3 x 5 in. to 8.5 x 14 in.)	X	X	✓	X	✓	✓[2]
Universal 105 x 148 mm to 216 x 356 mm (4.13 x 5.83 in. to 8.5 x 14 in.)	✓	X	X	X	✓	✓
Universal 148 x 210 mm to 216 x 356 mm (5.83 x 8.27 in. to 8.5 x 14 in.)	X	✓	X	X	X	✓
7 3/4 Envelope (Monarch) 98 x 191 mm (3.9 x 7.5 in.)	X	X	✓	X	X	✓

Paper size	Standard 550-sheet tray	Optional 250- or 550-sheet tray	Multipurpose feeder	Two-sided printing	ADF	Scanner glass
9 Envelope 98 x 225 mm (3.9 x 8.9 in.)	X	X	√	X	X	√
10 Envelope 105 x 241 mm (4.1 x 9.5 in.)	X	X	√	X	X	√
DL Envelope 110 x 220 mm (4.3 x 8.7 in.)	X	X	√	X	X	√
C5 Envelope 162 x 229 mm (6.4 x 9 in.)	X	X	√	X	X	√
B5 Envelope 176 x 250 mm (6.9 x 9.8 in.)	X	X	√	X	X	√
Other Envelope 76.2 x 127 mm to 216 x 356 mm (3 x 5 in. to 8.5 x 14 in.)	X	X	√	X	X	√

Supported paper types

Paper type	Standard 550-sheet tray	Optional 250- or 550-sheet tray	Multipurpose feeder	Two-sided printing	ADF	Scanner glass
Plain paper	√	√	√	√	√	√
Card stock	X	X	√	X	X	√
Transparency	√	X	√	X	X	√
Recycled	√	√	√	√	√	√
Paper labels[1]	√	√	√	X	X	√

[1] One-sided paper labels designed for laser printers are supported for occasional use. It is recommended to print 20 or fewer pages of paper labels per month. Vinyl, pharmacy, and two-sided labels are not supported.

[2] Bond and Heavy paper are supported in two-sided printing up to 90-g/m^2 (24-lb) paper weight.

Paper type	Standard 550-sheet tray	Optional 250- or 550-sheet tray	Multipurpose feeder	Two-sided printing	ADF	Scanner glass
Bond[2]	√	√	√	√	√	√
Letterhead	√	√	√	√	√	√
Preprinted	√	√	√	√	√	√
Colored paper	√	√	√	√	√	√
Light paper	√	√	√	√	√	√
Heavy paper[2]	√	√	√	√	√	√
Rough/Cotton	√	√	√	√	√	√
Envelope	X	X	√	X	X	√
Rough envelope	X	X	√	X	X	√

[1] One-sided paper labels designed for laser printers are supported for occasional use. It is recommended to print 20 or fewer pages of paper labels per month. Vinyl, pharmacy, and two-sided labels are not supported.

[2] Bond and Heavy paper are supported in two-sided printing up to 90-g/m^2 (24-lb) paper weight.

Supported paper weights

Paper type	Tray	Multipurpose feeder	ADF	Two-sided printing
Plain paper	60–120 g/m^2 (16–32 lb)	60–216 g/m^2 (16–58 lb)	Standard-sized paper: 52–120 g/m^2 (14–32 lb) Universal-sized media: 60–90 g/m^2 (16–24 lb)	60–90 g/m^2 (16–24 lb)
Card stock	N/A	60–216 g/m^2 (16–58 lb)	52–120 g/m^2 (14–32 lb)	N/A
Transparency	60–120 g/m^2 (16–32 lb)	60–216 g/m^2 (16–58 lb)	N/A	N/A
Labels*	60–120 g/m^2 (16–32 lb)	60–216 g/m^2 (16–58 lb)	N/A	N/A

* One-sided paper labels designed for laser printers are supported for occasional use. It is recommended to print 20 or fewer pages of paper labels per month. Vinyl, pharmacy, and two-sided labels are not supported.

Paper type	Tray	Multipurpose feeder	ADF	Two-sided printing
Envelopes	N/A	N/A	60–216 g/m^2 (16–58 lb)	N/A

* One-sided paper labels designed for laser printers are supported for occasional use. It is recommended to print 20 or fewer pages of paper labels per month. Vinyl, pharmacy, and two-sided labels are not supported.

Lexmark MB2546, MB2650, MX521, MX522, MX622, XM1242, XM1246, XM3250 MFPs



The following tables provide information on standard and optional paper sources and the sizes, types, and weights of paper that they support.

Note: For an unlisted paper size, select the closest *larger* listed size.

Supported paper sizes

Supported paper sizes

Paper size	Standard 550-sheet tray	Optional 250- or 550-sheet tray	Multipurpose feeder	Two-sided printing	ADF	Scanner glass
A4 210 x 297 mm (8.3 x 11.7 in.)	✓	✓	✓	✓	✓	✓
A5 210 x 148 mm (8.3 x 5.8 in.)	✓	✓	✓	X	✓	✓
A5 LEF 148 x 210 mm (5.8 x 8.3 in.)	✓	X	✓	X	✓	✓

Paper size	Standard 550-sheet tray	Optional 250- or 550-sheet tray	Multipurpose feeder	Two-sided printing	ADF	Scanner glass
A6 105 x 148 mm (4.1 x 5.8 in.)	✓	X	✓	X	✓	✓
JIS B5 182 x 257 mm (7.2 x 10.1 in.)	✓	✓	✓	X	✓	✓
Oficio (Mexico) 216 x 340 mm (8.5 x 13.4 in.)	✓	✓	✓	✓	✓	✓
Hagaki 100 x 148 mm (3.9 x 5.8 in.)	X	X	✓	X	X	✓
Business card 50.8 x 88.9 mm (2 x 3.5 in.)	X	X	X	X	X	✓
Statement 140 x 216 mm (5.5 x 8.5 in.)	✓	✓	✓	X	✓	✓
Executive 184 x 267 mm (7.3 x 10.5 in.)	✓	✓	✓	X	✓	✓
Letter 216 x 279 mm (8.5 x 11 in.)	✓	✓	✓	✓	✓	✓
Legal 216 x 356 mm (8.5 x 14 in.)	✓	✓	✓	✓	✓	✓
Folio 216 x 330 mm (8.5 x 13 in.)	✓	✓	✓	✓	✓	✓
Universal 76.2 x 127 mm to 216 x 356 mm (3 x 5 in. to 8.5 x 14 in.)	X	X	✓	X	X	✓

Paper size	Standard 550-sheet tray	Optional 250- or 550-sheet tray	Multipurpose feeder	Two-sided printing	ADF	Scanner glass
Universal 105 x 148 mm to 216 x 356 mm (4.13 x 5.83 in. to 8.5 x 14 in.)	√	X	X	X	√	√
Universal 148 x 210 mm to 216 x 356 mm (5.83 x 8.27 in. to 8.5 x 14 in.)	X	√	X	X	X	√
7 3/4 Envelope (Monarch) 98 x 191 mm (3.9 x 7.5 in.)	X	X	√	X	X	√
9 Envelope 98 x 225 mm (3.9 x 8.9 in.)	X	X	√	X	X	√
10 Envelope 105 x 241 mm (4.1 x 9.5 in.)	X	X	√	X	X	√
DL Envelope 110 x 220 mm (4.3 x 8.7 in.)	X	X	√	X	X	√
C5 Envelope 162 x 229 mm (6.4 x 9 in.)	X	X	√	X	X	√
B5 Envelope 176 x 250 mm (6.9 x 9.8 in.)	X	X	√	X	X	√
Other Envelope 76.2 x 127 mm to 216 x 356 mm (3 x 5 in. to 8.5 x 14 in.)	X	X	√	X	X	√

Supported paper types

Supported paper types

Paper type	Standard 550-sheet tray	Optional 250- or 550-sheet tray	Multipurpose feeder	Two-sided printing	ADF	Scanner glass
Plain paper	√	√	√	√	√	√
Card stock	X	X	√	X	X	√
Transparency	√	X	√	X	X	√
Recycled	√	√	√	√	√	√
Paper labels[1]	√	√	√	X	X	√
Bond[2]	√	√	√	√	√	√
Letterhead	√	√	√	√	√	√
Preprinted	√	√	√	√	√	√
Colored paper	√	√	√	√	√	√
Light paper	√	√	√	√	√	√
Heavy paper[2]	√	√	√	√	√	√
Rough/Cotton	√	√	√	√	√	√
Envelope	X	X	√	X	X	√
Rough envelope	X	X	√	X	X	√

[1] One-sided paper labels designed for laser printers are supported for occasional use. It is recommended to print 20 or fewer pages of paper labels per month. Vinyl, pharmacy, and two-sided labels are not supported.

[2] Bond and Heavy paper are supported in two-sided printing up to 90-g/m^2 (24-lb) paper weight.

Supported paper weights

Paper type	Tray	Multipurpose feeder	ADF	Two-sided printing
Plain Paper	60–120 g/m^2 (16–32 lb)	60–216 g/m^2 (16–58 lb)	Standard-sized paper: 52–120 g/m^2 (14–32 lb) Universal-sized media: 60–90 g/m^2 (16–24 lb)	60–90 g/m^2 (16–24 lb)
Card Stock	N/A	60–216 g/m^2 (16–58 lb)	52–120 g/m^2 (14–32 lb)	N/A
Transparency	60–120 g/m^2 (16–32 lb)	60–216 g/m^2 (16–58 lb)	N/A	N/A
Labels*	60–120 g/m^2 (16–32 lb)	60–216 g/m^2 (16–58 lb)	N/A	N/A
Envelopes	N/A	N/A	60–216 g/m^2 (16–58 lb)	N/A

* One-sided paper labels designed for laser printers are supported for occasional use. It is recommended to print 20 or fewer pages of paper labels per month. Vinyl, pharmacy, and two-sided labels are not supported.

Lexmark C9235, CS921, CS923, CS927, CX921, CX922, CX923, CX924, CX927, XC9225, XC9235, XC9245, XC9255, XC9265 Printers and MFPs



The following tables provide information on standard and optional paper sources and the sizes, types, and weights of paper that they support.

Note: For an unlisted paper size, select the closest *larger* listed size.

Supported paper sizes

Paper sizes supported by the printer

Paper size and dimension	500-sheet tray	2 x 500-sheet tray	2500-sheet tray	3000-sheet tray	Multipurpose feeder[3]	Two-sided printing
7 3/4 Envelope 98 x 191 mm (3.9 x 7.5 in.)	X	X	X	X	✓	X
9 Envelope 98.4 x 225 mm (3.9 x 8.9 in.)	X	X	X	X	✓	X
10 Envelope 105 x 241 mm (4.1 x 9.5 in.)	X	X	X	X	✓	X
11 x 17 279.4 x 431.8 mm (11 x 17 in.)	✓[1]	✓[1]	X	X	✓[1]	✓
12 x 18 305 x 457 mm (12 x 18 in.)	✓[1, 4]	X	X	X	✓[1]	✓
A3 297 x 420 mm (11.69 x 16.54 in.)	✓[1]	✓[1]	X	X	✓[1]	✓
A4 210 x 297 mm (8.3 x 11.7 in.)	✓	✓	✓[2]	✓[2]	✓	✓
A5 148 x 210 mm (5.8 x 8.3 in.)	✓[1]	✓[1]	X	X	✓	✓
A6 105 x 148 mm (4.1 x 5.8 in.)	X	X	X	X	✓[1]	✓
B5 Envelope 176 x 250 mm (6.9 x 9.8 in.)	X	X	X	X	✓	X

[1] This paper is loaded only in short-edge orientation.

[2] This paper is loaded only in long-edge orientation.

[3] The paper source supports paper size *without size sensing*.

[4] This paper is not supported in tray 1.

[5] Two-sided printing supports Universal sizes between 139.7 x 148 mm to 320 x 458 mm (5.5 x 5.83 in. to 12.6 x 18 in.).

Paper size and dimension	500-sheet tray	2 x 500-sheet tray	2500-sheet tray	3000-sheet tray	Multipurpose feeder[3]	Two-sided printing
C5 Envelope 162 x 229 mm (6.4 x 9 in.)	X	X	X	X	✓	X
DL Envelope 110 x 220 mm (4.3 x 8.7 in.)	X	X	X	X	✓	X
Executive 184 x 267 mm (7.3 x 10.5 in.)	✓	✓	X	X	✓	✓
Folio 216 x 330 mm (8.5 x 13 in.)	✓	✓	X	X	✓	✓
JIS B4 257 x 364 mm (10.12 x 14.33 in.)	✓[1]	✓[1]	X	X	✓[1]	✓
JIS B5 182 x 257 mm (7.2 x 10.1 in.)	✓	✓	X	X	✓	✓
Legal 216 x 356 mm (8.5 x 14 in.)	✓[1]	✓[1]	X	X	✓[1]	✓
Letter 216 x 279 mm (8.5 x 11 in.)	✓	✓	✓[2]	✓[2]	✓	✓
Oficio 216 x 340 mm (8.5 x 13.4 in.)	✓	✓	X	X	✓	✓
Other Envelope Max: 297 x 427.6 mm (11.69 x 16.83 in.)	X	X	X	X	✓	X

[1] This paper is loaded only in short-edge orientation.

[2] This paper is loaded only in long-edge orientation.

[3] The paper source supports paper size *without size sensing*.

[4] This paper is not supported in tray 1.

[5] Two-sided printing supports Universal sizes between 139.7 x 148 mm to 320 x 458 mm (5.5 x 5.83 in. to 12.6 x 18 in.).

Paper size and dimension	500-sheet tray	2 x 500-sheet tray	2500-sheet tray	3000-sheet tray	Multipurpose feeder[3]	Two-sided printing
SRA3 320 x 450 mm (12.6 x 17.7 in.)	✓[1, 4]	X	X	X	✓[1]	✓
Statement 140 x 216 mm (5.5 x 8.5 in.)	✓[1]	✓[1]	X	X	✓	✓
Universal 90 x 139.7 mm to 320 x 1200 mm (3.5 x 5.5 in. to 12.6 x 47.24 in.)	✓	✓	X	X	✓	✓[5]

[1] This paper is loaded only in short-edge orientation.

[2] This paper is loaded only in long-edge orientation.

[3] The paper source supports paper size *without size sensing*.

[4] This paper is not supported in tray 1.

[5] Two-sided printing supports Universal sizes between 139.7 x 148 mm to 320 x 458 mm (5.5 x 5.83 in. to 12.6 x 18 in.).

Paper sizes supported by the ADF and scanner

Paper size	Dimensions	ADF	Scanner
3 x 5	76.2 x 127 mm (3 x 5 in.)	X	✓[1,2]
4 x 6	101.6 x 152.4 mm (4 x 6 in.)	✓[2]	✓[1,2]
7 3/4 Envelope	98 x 191 mm (3.9 x 7.5 in.)	X	X
9 Envelope	98 x 225 mm (3.9 x 8.9 in.)	X	X
10 Envelope	105 x 241 mm (4.1 x 9.5 in.)	X	X
11 x 17	279.4 x 431.8 mm (11 x 17 in.)	✓	✓
12 x 18	305 x 457 mm (12 x 18 in.)	X	X
A3	297 x 420 mm (11.69 x 16.54 in.)	✓	✓

[1] This paper is loaded only in short-edge orientation.

[2] The paper source supports paper size *without size sensing*.

Paper size	Dimensions	ADF	Scanner
A4	210 x 297 mm (8.3 x 11.7 in.)	√	√
A5	148 x 210 mm (5.8 x 8.3 in.)	√	√[2]
A6	105 x 148 mm (4.1 x 5.8 in.)	√[1,2]	√[1,2]
B5 Envelope	176 x 250 mm (6.9 x 9.8 in.)	**X**	**X**
C5 Envelope	162 x 229 mm (6.4 x 9 in.)	**X**	**X**
DL Envelope	110 x 220 mm (4.3 x 8.7 in.)	**X**	**X**
Business card	N/A	**X**	√[1,2]
Custom Scan Size [x]	N/A	√[2]	√[2]
Hagaki	100 x 148 mm (3.94 x 5.83 in.)	√	√
Executive	184 x 267 mm (7.3 x 10.5 in.)	√	√
Folio	216 x 330 mm (8.5 x 13 in.)	√	√
JIS B4	257 x 364 mm (10.12 x 14.33 in.)	√	√
JIS B5	182 x 257 mm (7.2 x 10.1 in.)	√	√
Letter	216 x 279 mm (8.5 x 11 in.)	√	√
Legal	216 x 356 mm (8.5 x 14 in.)	√	√
Oficio	216 x 340 mm (8.5 x 13.4 in.)	√[2]	√[2]
Other Envelope	98 x 162 mm to 176 x 250 mm (3.9 x 6.3 in. to 6.9 x 9.8 in.)	**X**	**X**
SRA3	320 x 450 mm (12.6 x 17.7 in.)	**X**	**X**

[1] This paper is loaded only in short-edge orientation.

[2] The paper source supports paper size *without size sensing*.

Paper size	Dimensions	ADF	Scanner
Statement	140 x 216 mm (5.5 x 8.5 in.)	✓	✓
Universal	89 x 98.4 mm to 297 x 431.8 mm (3.50 x 3.87 in. to 11.69 x 17.00 in.)	✓[2]	✓[2]

[1] This paper is loaded only in short-edge orientation.

[2] The paper source supports paper size *without size sensing*.

Paper sizes supported by the finisher

Note: When a finisher is installed, the standard finisher bin becomes the default bin even for print jobs that do not require finishing.

Supported paper sizes

Paper size	Staple finisher	Staple, hole punch finisher bin 1	Staple, hole punch finisher bin 2	Booklet finisher
11 x 17	✓	✓	✓	✓
12 x 18	✓[1]	✓[1]	✓[5]	✓
A3	X	✓[1]	✓[5]	✓
A4	✓	✓	✓	✓
A5	✓[1]	✓[1]	✓[4]	X
A6	✓[1]	✓[1]	X	X
Executive	✓	✓	✓	X
Folio	✓[1]	✓	✓	X
JIS B5	✓	✓	✓	X
JIS B4	✓	✓	✓	✓
Legal	✓	✓[6]	✓	✓
Letter	✓	✓	✓	✓
Oficio	✓[1]	✓	✓	X

[1] Paper is supported but the finisher does not stack, staple, or punch holes in it.

[2] Paper is supported only if the finisher stacks and punches holes in it but does not staple it.

[3] Paper is supported only if the paper size is 210 x 279.4 mm to 320 x 457.2 mm (8.27 x 11 in. to 12.6 x 18 in.).

[4] Paper is supported only if the finisher stacks and staples the paper but does not punch holes in it.

[5] Paper is supported only if the finisher stacks the paper but does not staple or punch holes in it.

[6] Paper is supported only for two-hole punch.

Paper size	Staple finisher	Staple, hole punch finisher bin 1	Staple, hole punch finisher bin 2	Booklet finisher
SRA3	✓[1]	✓[3]	✓[1]	✓
Statement	✓[1]	✓[1]	✓[1]	X
Universal	✓	✓[1]	✓[5]	✓[3]

[1] Paper is supported but the finisher does not stack, staple, or punch holes in it.

[2] Paper is supported only if the finisher stacks and punches holes in it but does not staple it.

[3] Paper is supported only if the paper size is 210 x 279.4 mm to 320 x 457.2 mm (8.27 x 11 in. to 12.6 x 18 in.).

[4] Paper is supported only if the finisher stacks and staples the paper but does not punch holes in it.

[5] Paper is supported only if the finisher stacks the paper but does not staple or punch holes in it.

[6] Paper is supported only for two-hole punch.

Supported paper types

Paper types supported by the printer

Note: Labels, transparencies, envelopes, and card stock always print at reduced speed.

Paper type	2 x 500-sheet tray	2500-sheet tray	3000-sheet tray	Multipurpose feeder	Two-sided printing
Bond	✓	✓	✓	✓	✓
Envelope	X	X	X	✓	X
Card Stock	✓	✓	✓	✓	✓
Colored Paper	✓	✓	✓	✓	✓
Custom Type	✓	✓	✓	✓	✓
Glossy	✓	✓	✓	✓	✓
Heavy Glossy	✓	✓	✓	✓	✓
Heavy Paper	✓	✓	✓	✓	✓
Labels	X	X	X	✓	X
Letterhead	✓	✓	✓	✓	✓
Light Paper	✓	✓	✓	✓	✓
Plain Paper	✓	✓	✓	✓	✓
Preprinted	✓	✓	✓	✓	✓
Recycled	✓	✓	✓	✓	✓

[1] Print in batches of only up to 20 to prevent them from sticking together.

Paper type	2 x 500-sheet tray	2500-sheet tray	3000-sheet tray	Multipurpose feeder	Two-sided printing
Rough Envelope	X	X	X	✓	X
Rough Cotton	✓	✓	✓	✓	✓
Transparencies[1]	X	X	X	✓	X
Vinyl Labels	X	X	X	X	X

[1] Print in batches of only up to 20 to prevent them from sticking together.

Paper type	ADF	Scanner
Bond	✓	✓
Envelope	✓	✓
Card Stock	✓	✓
Colored Paper	✓	✓
Custom Type	✓	✓
Glossy	✓	✓
Heavy Glossy	✓	✓
Heavy Paper	✓	✓
Labels	✓	✓
Letterhead	✓	✓
Light Paper	✓	✓
Plain Paper	✓	✓
Preprinted	✓	✓
Recycled	✓	✓
Rough Envelope	✓	✓
Rough Cotton	✓	✓
Transparencies[1]	✓	✓
Vinyl Labels	✓	✓

[1] Print in batches of only up to 20 to prevent them from sticking together.

Paper types supported by the finisher

Paper type	Staple finisher		Staple, hole punch finisher			Booklet finisher
	Non-finishing	Staple	Non-finishing	Staple	Hole punch	
Bond	✓	✓	✓	✓	✓	✓
Card Stock	✓	X	✓	X	✓	X
Glossy	✓	X	✓	✓	✓	✓
Heavy Glossy	✓	X	✓	X	✓	X
Labels	✓	X	✓	X	X	X
Plain Paper	✓	✓	✓	✓	✓	✓
Recycled	✓	✓	✓	✓	✓	✓
Transparencies[1]	✓	X	✓	X	X	X
Vinyl Labels	X	X	X	X	X	X
Envelope	✓	X	✓	X	X	X
Rough Envelope	✓	X	✓	X	X	X
Letterhead	✓	✓	✓	✓	✓	✓
Preprinted	✓	✓	✓	✓	✓	✓
Colored Paper	✓	✓	✓	✓	✓	✓
Light Paper	✓	✓	✓	✓	✓	✓
Heavy Paper	✓	X	✓	X	X	X
Rough Cotton	✓	X	✓	X	X	X
Custom Type	✓	✓	✓	✓	✓	✓

[1] Print in batches of only up to 20 to prevent them from sticking together.

Supported paper weights

Paper type	Standard 550-sheet tray	2 x 500-sheet tray	2500-sheet tray	3000-sheet tray	Multipurpose feeder
Plain paper	60–256 g/m^2 (16–68 lb)				
Glossy	60–256 g/m^2 (16–68 lb)				
Card stock	60–256 g/m^2 (16–68 lb)				
Labels	N/A	N/A	N/A	N/A	60–256 g/m^2 (16–68 lb)

Paper type	Standard 550-sheet tray	2 x 500-sheet tray	2500-sheet tray	3000-sheet tray	Multipurpose feeder
Envelopes	N/A	N/A	N/A	N/A	75–256 g/m^2 (20–68 lb)

Lexmark C6160, CS820, CS827, CX820, CX825, CX827, CX860, XC6152, XC6153, XC8155, XC8160, XC8163 Printers and MFPs



The following tables provide information on standard and optional paper sources and the sizes, types, and weights of paper that they support.

Note: For an unlisted paper size, select the closest *larger* listed size.

Supported paper sizes

Supported input sizes

Paper size	Dimensions	550-sheet tray	2200-sheet tray	Envelope tray	Multipurpose feeder[1]	Two-sided printing	ADF
3 x 5	76.2 x 127 mm (3 x 5 in.)	**X**	**X**	**X**	✓	**X**	**X**
4 x 6	101.6 x 152.4 mm (4 x 6 in.)	**X**	**X**	**X**	✓	**X**	**X**

[1] This paper source does not support automatic size sensing.

[2] A5 portrait reports as Universal in the standard and optional 550-sheet trays.

Paper size	Dimensions	550-sheet tray	2200-sheet tray	Envelope tray	Multipurpose feeder[1]	Two-sided printing	ADF
A4	210 x 297 mm (8.3 x 11.7 in.)	✓	✓	X	✓	✓	✓
A5 landscape	210 x 148 mm (8.3 x 5.8 in.)	✓	✓	X	✓	✓	X
A5 portrait[2]	148 x 210 mm (5.8 x 8.3 in.)	✓	X	X	✓	✓	✓
A6	105 x 148 mm (4.1 x 5.8 in.)	X	X	X	✓	✓	✓
Banner	Max width: 215.9 mm (8.5 in.) Max length: 1320.8 mm (52 in.)	X	X	X	✓	X	X
Executive	184.2 x 266.7 mm (7.3 x 10.5 in.)	✓	X	X	✓	✓	✓
Folio	215.9 x 330.2 mm (8.5 x 13 in.)	✓	✓	X	✓	✓	✓
JIS B5	182 x 257 mm (7.2 x 10.1 in.)	✓	X	X	✓	✓	✓
Legal	215.9 x 355.6 mm (8.5 x 14 in.)	✓	✓	X	✓	✓	✓
Letter	215.9 x 279.4 mm (8.5 x 11 in.)	✓	✓	X	✓	✓	✓
Oficio	216 x 340 mm (8.5 x 13.4 in.)	✓	✓	X	✓	✓	✓
Statement	139.7 x 215.9 mm (5.5 x 8.5 in.)	✓	X	X	✓	✓	✓
Universal	139.7 x 148 mm to 215.9 x 355.6 mm (5.5 x 5.8 in. to 8.5 x 14 in.)	X	X	X	✓	X	X
Universal	76.2 x 127 mm to 229 x 359.9 mm (3 x 5 in. to 9 x 14.2 in.)	✓	X	X	✓	✓	X

[1] This paper source does not support automatic size sensing.

[2] A5 portrait reports as Universal in the standard and optional 550-sheet trays.

Paper size	Dimensions	550-sheet tray	2200-sheet tray	Envelope tray	Multipurpose feeder[1]	Two-sided printing	ADF
Universal	98.4 x 162 mm to 176 x 250 mm (3.9 x 6.4 in. to 6.9 x 9.8 in.)	X	X	✓	X	X	X
Universal	210 x 215.9 mm to 210 x 1321 mm (8.27 x 8.5 in. to 8.27 x 52 in.)	X	X	X	✓	X	X
7 3/4 Envelope	98 x 190.5 mm (3.9 x 7.5 in.)	X	X	✓	✓	X	X
9 Envelope	98.4 x 225.4 mm (3.86 x 8.9 in.)	X	X	✓	✓	X	X
10 Envelope	104.8 x 241.3 mm (4.1 x 9.5 in.)	X	X	✓	✓	X	X
B5 Envelope	176 x 250 mm (6.9 x 9.8 in.)	X	X	✓	✓	X	X
C4 Envelope	229 x 324 mm (9 x 13 in.)	X	X	X	✓	X	X
C5 Envelope	162 x 229 mm (6.4 x 9 in.)	X	X	✓	✓	X	X
DL Envelope	110 x 220 mm (4.3 x 8.7 in.)	X	X	✓	✓	X	X
Other Envelope	98.4 x 162 mm to 229 x 359.9 mm (3.9 x 6.4 in. to 9 x 14.2 in.)	X	X	X	✓	X	X

[1] This paper source does not support automatic size sensing.

[2] A5 portrait reports as Universal in the standard and optional 550-sheet trays.

Supported output sizes

Paper size	Dimensions	Standard bin	Staple finisher		Multiposition staple, hole punch finisher[1]			
			Offset	Staple	Offset	Staple	Hole punch	2-bin mailbox
3 x 5	76.2 x 127 mm (3 x 5 in.)	✓	X	X	✓	X	X	✓

[1] This option supports only CX825, CX860, and XC8100 Series models.

[2] A5 portrait reports as Universal in the standard and optional 550-sheet trays.

Paper size	Dimensions	Standard bin	Staple finisher		Multiposition staple, hole punch finisher[1]			
			Offset	Staple	Offset	Staple	Hole punch	2-bin mailbox
4 x 6	101.6 x 152.4 mm (4 x 6 in.)	✓	X	X	✓	X	X	✓
A4	210 x 297 mm (8.3 x 11.7 in.)	✓	✓	✓	✓	✓	✓	✓
A5 landscape	210 x 148 mm (8.3 x 5.8 in.)	✓	✓	X	✓	✓	X	✓
A5 portrait[2]	148 x 210 mm (5.8 x 8.3 in.)	✓	X	X	✓	X	✓	✓
A6	105 x 148 mm (4.1 x 5.8 in.)	✓	X	X	✓	X	X	X
Executive	184.2 x 266.7 mm (7.3 x 10.5 in.)	✓	✓	X	✓	✓	✓	✓
Folio	215.9 x 330.2 mm (8.5 x 13 in.)	✓	✓	✓	✓	✓	✓	✓
JIS B5	182 x 257 mm (7.2 x 10.1 in.)	✓	✓	X	✓	✓	✓	✓
Legal	215.9 x 355.6 mm (8.5 x 14 in.)	✓	✓	✓	✓	✓	X	✓
Letter	215.9 x 279.4 mm (8.5 x 11 in.)	✓	✓	✓	✓	✓	✓	✓
Oficio	216 x 340 mm (8.5 x 13.4 in.)	✓	✓	✓	✓	✓	✓	✓
Statement	139.7 x 215.9 mm (5.5 x 8.5 in.)	✓	X	X	✓	X	✓	✓
Universal	139.7 x 148 mm to 215.9 x 359.9 mm (5.5 x 5.8 in. to 8.5 x 14.2 in.)	✓	X	X	✓	X	X	X
Universal	76.2 x 127 mm to 229 x 359.9 mm (3 x 5 in. to 9 x 14.2 in.)	✓	X	✓	✓	X	X	X

[1] This option supports only CX825, CX860, and XC8100 Series models.

[2] A5 portrait reports as Universal in the standard and optional 550-sheet trays.

Paper size	Dimensions	Standard bin	Staple finisher		Multiposition staple, hole punch finisher[1]			
			Offset	Staple	Offset	Staple	Hole punch	2-bin mailbox
Universal	98.4 x 162 mm to 176 x 250 mm (3.9 x 6.4 in. to 6.9 x 9.8 in.)	✓	X	X	X	X	X	X
Universal	210 x 215.9 mm to 210 x 1321 mm (8.27 x 8.5 in. to (8.27 x 52 in.)	✓	X	X	X	X	X	X
7 3/4 Envelope	98 x 190.5 mm (3.9 x 7.5 in.)	✓	X	X	X	X	X	X
9 Envelope	98.4 x 225.4 mm (3.86 x 8.9 in.)	✓	X	X	X	X	X	X
10 Envelope	104.8 x 241.3 mm (4.1 x 9.5 in.)	✓	X	X	X	X	X	X
B5 Envelope	176 x 250 mm (6.9 x 9.8 in.)	✓	X	X	X	X	X	X
C4 Envelope	229 x 324 mm (9 x 13 in.)	✓	X	X	X	X	X	X
C5 Envelope	162 x 229 mm (6.4 x 9 in.)	✓	X	X	X	X	X	X
DL Envelope	110 x 220 mm (4.3 x 8.7 in.)	✓	X	X	X	X	X	X
Other Envelope	98.4 x 162 mm to 229 x 359.9 mm (3.9 x 6.4 in. to (9 x 14.2 in.)	✓	X	X	X	X	X	X

[1] This option supports only CX825, CX860, and XC8100 Series models.

[2] A5 portrait reports as Universal in the standard and optional 550-sheet trays.

Supported paper types

Supported input types

Note: Labels, envelopes, and card stock always print at reduced speed.

Paper type	550-sheet tray	2200-sheet tray	Envelope tray	Multipurpose feeder	Two-sided printing	ADF
Plain Paper	✓	✓	X	✓	✓	✓
Card Stock [2]	✓[1]	X	X	✓[1]	✓	X
Recycled	✓	✓	X	✓	✓	✓
Glossy	✓	✓	X	✓	✓	X
Heavy Glossy	✓	✓	X	✓	✓	X
Labels	✓	X	X	✓	X	X
Vinyl Labels	✓	X	X	✓	X	X
Bond	✓	✓	X	✓	✓	✓
Envelope	X	X	✓	✓	X	X
Rough Envelope	X	X	✓	✓	X	X
Transparency	X	X	X	✓	X	X
Letterhead	✓	✓	X	✓	✓	✓
Preprinted	✓	✓	X	✓	✓	✓
Colored Paper	✓	✓	X	✓	✓	✓
Light Paper	✓	✓	X	✓	✓	✓
Heavy Paper	✓	✓	X	✓	✓	✓
Rough Cotton	✓	✓	X	✓	✓	✓

[1] This paper source supports up to 176 g/m^2 of card stock weight.

[2] Card stock that weighs more than 176 g/m^2 is supported only in one-sided printing using the standard 550-sheet tray.

Supported output types

Paper type	Staple finisher			Multiposition staple, hole punch finisher*		
	Non-finishing	Offset	Staple	Standard bin (Normal and offset stacking)	2-bin mailbox	Staple and hole punch
Plain Paper	✓	✓	✓	✓	✓	✓
Card Stock	✓	✓	X	✓	X	X

* This option supports only the CX825, CX860, and XC8100 printer models.

Paper type	Staple finisher			Multiposition staple, hole punch finisher*		
	Non-finishing	Offset	Staple	Standard bin (Normal and offset stacking)	2-bin mailbox	Staple and hole punch
Transparency	√	X	X	√	X	X
Recycled	√	√	√	√	√	√
Glossy	√	√	X	√	√	X
Heavy Glossy	√	√	X	√	√	X
Labels	√	X	X	√	X	X
Vinyl Labels	√	X	X	√	X	X
Bond	√	√	√	√	√	√
Envelope	√	√	X	√	X	X
Rough Envelope	√	√	X	√	X	X
Letterhead	√	√	√	√	√	√
Preprinted	√	√	√	√	√	√
Colored Paper	√	√	√	√	√	√
Light Paper	√	√	√	√	√	√
Heavy Paper	√	√	√	√	√	√
Rough Cotton	√	√	√	√	√	√

* This option supports only the CX825, CX860, and XC8100 printer models.

Supported paper weights

Paper type	Standard 550-sheet tray	2200-sheet tray	Envelope tray	Multipurpose feeder
Plain Paper[1,2]	60–176 g/m^2 (16–47 lb)[3]	60–120 g/m^2 (16–32 lb)	N/A	60–176 g/m^2 (16–47 lb)
Banner Paper	N/A	N/A	N/A	90–105 g/m^2 (24–28 lb)

[1] Grain short paper that weighs at least 90 g/m^2 (24 lb) is supported in two-sided printing.

[2] Recycled paper that weighs 75–120 g/m^2 (20–32 lb) is supported in two-sided printing.

[3] The paper weight is also supported in two-sided printing.

[4] 100% cotton content maximum weight is 24 lb bond.

[5] 28 lb-bond envelopes are limited to 25% cotton content.

Paper type	Standard 550-sheet tray	2200-sheet tray	Envelope tray	Multipurpose feeder
Glossy	88–176 g/m^2 (60–120 lb)	N/A	N/A	88–176 g/m^2 (60–120 lb)
Card stock	88–300 g/m^2 (60–192 lb)	N/A	N/A	163–176 g/m^2 (90–120 lb)
Labels	88–300 g/m^2 (60–192 lb)	N/A	N/A	199–220 g/m^2 (53–59 lb)
Envelopes	N/A	N/A	60–105 g/m^2 (16–28 lb)[4, 5]	60–105 g/m^2 (16–28 lb)

[1] Grain short paper that weighs at least 90 g/m^2 (24 lb) is supported in two-sided printing.

[2] Recycled paper that weighs 75–120 g/m^2 (20–32 lb) is supported in two-sided printing.

[3] The paper weight is also supported in two-sided printing.

[4] 100% cotton content maximum weight is 24 lb bond.

[5] 28 lb-bond envelopes are limited to 25% cotton content.

Supported card stock

Paper type	Grain direction	Paper weight			
		Standard tray	Optional 550-sheet tray	Multipurpose feeder	Two-sided printing
Index Bristol	Grain long	300 g/m^2 (166 lb)	163 g/m^2 (90 lb)	163 g/m^2 (90 lb)	163 g/m^2 (90 lb)
	Grain short	300 g/m^2 (166 lb)	199 g/m^2 (110 lb)	199 g/m^2 (110 lb)	199 g/m^2 (110 lb)
Tag	Grain long	300 g/m^2 (184 lb)	163 g/m^2 (100 lb)	163 g/m^2 (100 lb)	163 g/m^2 (100 lb)
	Grain short	300 g/m^2 (184 lb)	203 g/m^2 (125 lb)	203 g/m^2 (125 lb)	203 g/m^2 (125 lb)
Cover	Grain long	300 g/m^2 (110 lb)	176 g/m^2 (65 lb)	176 g/m^2 (65 lb)	176 g/m^2 (65 lb)
	Grain short	300 g/m^2 (110 lb)	218 g/m^2 (80 lb)	218 g/m^2 (80 lb)	218 g/m^2 (80 lb)

Supported labels

Label type	Width and length	Weight	Thickness	Smoothness
Paper	76 x 216 mm (3 x 8.5 in.)[a]	Up to 180 g/m^2 (48 lb)	0.13–0.20 mm (0.005-0.0008 in.)	50–300 Sheffield[b]
Dual web		Up to 180 g/m^2 (48 lb)		
Polyester		Up to 220 g/m^2 (59 lb)		
Vinyl		Up to 300 g/m^2 (92 lb)		

[a] The minimum size for labels supported in the multipurpose feeder is 76 x 124 mm (3 x 5 in.). The minimum size for labels supported in the standard and optional trays is 148 x 210 mm (5.8 x 8.3 in.).

[b] 50 Sheffield is optimal. Using media higher than 300 Sheffield could result in print quality degradation.

[c] The weight is only supported in two-line-printing.

Label type	Width and length	Weight	Thickness	Smoothness
Integrated forms	N/A	Up to 175 g/m^2 (47 lb)[c]	N/A	N/A

[a] The minimum size for labels supported in the multipurpose feeder is 76 x 124 mm (3 x 5 in.). The minimum size for labels supported in the standard and optional trays is 148 x 210 mm (5.8 x 8.3 in.).

[b] 50 Sheffield is optimal. Using media higher than 300 Sheffield could result in print quality degradation.

[c] The weight is only supported in two-line-printing.

Letterhead orientation

Source	Printing	Printed side	Paper orientation
Trays	One-sided	Faceup	Load paper with the top edge toward the left side of the tray.
	Two-sided	Facedown	Load paper with the top edge toward the right side of the tray.
Multipurpose feeder	One-sided	Facedown	Load paper with the top edge entering the printer first.
	Two-sided	Faceup	Load paper with the top edge entering the printer last.

Notes:

- For one-sided print jobs that require finishing, load paper facedown with the top edge toward the right side of the tray. For the multipurpose feeder, load paper faceup with the top edge entering the printer last.
- For two-sided print jobs that require finishing, load paper faceup with the top edge toward the left side of the tray. For the multipurpose feeder, load paper facedown with the top edge entering the printer first.

Lexmark C4150, CS720, CS725, CS727, CS728, CX725, CX727, XC4140, XC4143, XC4150, XC4153 Printers and MFPs



The following tables provide information on standard and optional paper sources and the sizes, types, and weights of paper that they support.

Note: For an unlisted paper size, select the closest *larger* listed size.

Supported paper sizes

Paper size	Dimensions	550-sheet tray	Multipurpose feeder*	Two-sided printing	ADF
A4	210 x 297 mm (8.3 x 11.7 in.)	✓	✓	✓	✓
A5 long edge	210 x 148 mm (8.3 x 5.8 in.)	✓	✓	✓	**X**
A5 short edge	148 x 210 mm (5.8 x 8.3 in.)	✓	✓	✓	✓
A6	105 x 148 mm (4.1 x 5.8 in.)	✓	✓	✓	✓
Banner	Max width: 215.9 mm (8.5 in.) Max length: 1320.8 mm (52 in.)	**X**	✓	**X**	**X**
Executive	184.2 x 266.7 mm (7.3 x 10.5 in.)	✓	✓	✓	✓
Folio	215.9 x 330.2 mm (8.5 x 13 in.)	✓	✓	✓	✓
JIS B5	182 x 257 mm (7.2 x 10.1 in.)	✓	✓	✓	✓

* This paper source does not support automatic size sensing.

Paper size	Dimensions	550-sheet tray	Multipurpose feeder*	Two-sided printing	ADF
Legal	215.9 x 355.6 mm (8.5 x 14 in.)	✓	✓	✓	✓
Letter	215.9 x 279.4 mm (8.5 x 11 in.)	✓	✓	✓	✓
Oficio	215.9 x 340 mm (8.5 x 13.4 in.)	✓	✓	✓	✓
Statement	139.7 x 215.9 mm (5.5 x 8.5 in.)	✓	✓	✓	✓
Universal	105 x 148 mm to 215.9 x 355.6 mm (4.13 x 5.83 in. to 8.5 x 14 in.)	✓	✓	✓	X
Universal	76.2 x 127 mm to 215.9 x 355.6 mm (3 x 5 in. to 8.5 x 14 in.)	X	✓	X	X
7 3/4 Envelope	98.4 x 190.5 mm (3.9 x 7.5 in.)	X	✓	X	X
9 Envelope	98.4 x 225.4 mm (3.86 x 8.9 in.)	X	✓	X	X
10 Envelope	104.8 x 241.3 mm (4.1 x 9.5 in.)	✓	✓	X	X
B5 Envelope	176 x 250 mm (6.9 x 9.8 in.)	✓	✓	X	X
C5 Envelope	162 x 229 mm (6.4 x 9 in.)	✓	✓	X	X
DL Envelope	110 x 220 mm (4.3 x 8.7 in.)	✓	✓	X	X
Monarch	98.4 x 190.5 mm (3.9 x 7.5 in.)	X	✓	X	X
Other Envelope	98.4 x 162 mm to 176 x 250 mm (3.87 x 6.38 in. to 6.93 x 9.84 in.)	X	✓	X	X

* This paper source does not support automatic size sensing.

Supported paper types

Note: Labels, envelopes, and card stock always print at reduced speed.

Paper type	550-sheet tray	Multipurpose feeder	ADF
Plain Paper	✓	✓	✓
Card Stock	✓	✓	X
Recycled	✓	✓	✓
Glossy	✓	✓	X
Heavy Glossy	✓	✓	X
Labels	✓	✓	X
Vinyl Labels	✓	✓	X
Bond	✓	✓	✓
Envelope	✓	✓	X
Rough Envelope	✓	✓	X
Transparency	X	X	X
Letterhead	✓	✓	✓
Preprinted	✓	✓	✓
Colored Paper	✓	✓	✓
Light Paper	✓	✓	✓
Heavy Paper	✓	✓	✓
Custom Type	✓	✓	✓

Supported paper weights

Paper type	Paper weight
Plain Paper	75–90.3 g/m^2 (20–24 lb)
Glossy	88–176 g/m^2 (60–120-lb book)
	162–176 g/m^2 grain long (60–65-lb cover)
Heavy Paper	90.3–105 g/m^2 grain long (24.1–28-lb bond)
Card stock	Up to 199 g/m^2 grain long (110 lb)
	Up to 218 g/m^2 grain short (80 lb)
Labels (Paper Labels)	218 g/m^2 (58 lb)
Labels (Vinyl Labels)	300-g/m^2 (79.9 lb)
Envelopes	60–105-g/m^2 (16–28-lb bond)

Tray fill line information

Depending on construction, paper labels and card stock can sometimes be difficult to pick and feed reliably. Performance can be improved by controlling the number of sheets of media loaded in the tray. There are two fill lines in the tray. The solid line is the maximum paper fill indicator. No media should be loaded in the tray above this line or paper jams could occur. The dashed line is the alternate paper fill indicator. It should be used if any feed or reliability issues are noted with specialty media, including labels and card stock. If paper jams occur when completely filling the tray, load the specialty media only up to the alternate paper fill indicator.

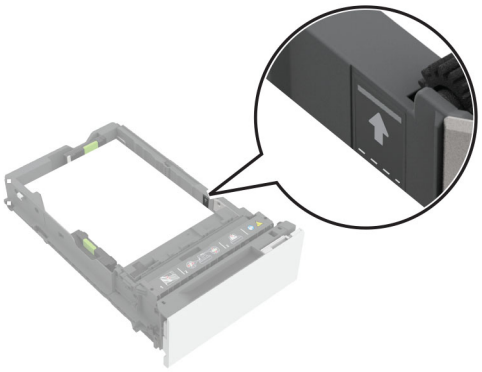

Supported card stock

Paper type	Grain direction	Paper weight
Index Bristol	Grain long	199 g/m^2 (110 lb)
	Grain short	199 g/m^2 (110 lb)
Tag	Grain long	163 g/m^2 (100 lb)
	Grain short	203 g/m^2 (125 lb)
Cover	Grain long	176 g/m^2 (65 lb)
	Grain short	218 g/m^2 (80 lb)

Supported labels

Label type	Width and length	Weight	Thickness	Smoothness
Paper	76 x 216 mm (3 x 8.5 in.)*	218 g/m^2 (58 lb)	0.13-0.20 mm (0.005-0.0008 in.)	50-300 Sheffield†
Vinyl		300 g/m^2 (79.9 lb)		

* The minimum size for labels supported in the multipurpose feeder is 76 x 124 mm (3 x 5 in.). The minimum size for labels supported in the standard and optional trays is 148 x 210 mm (5.8 x 8.3 in.).

† 50 Sheffield is optimal. Using media higher than 300 Sheffield could result in print quality degradation.

Note: Limit label printing to occasional use only, approximately 1500 labels per month.

Letterhead orientation

Source	Printing	Printed side	Paper orientation
Trays	One-sided	Faceup	Load paper with the top edge toward the front of the tray.
	Two-sided	Facedown	Load paper with the top edge toward the back of the tray.
Multipurpose feeder	One-sided	Facedown	Load paper with the top edge entering the printer first.
	Two-sided	Faceup	Load paper with the top edge entering the printer last.

Glossary

Adhesive contamination Migration of adhesive away from a label, which can cause printer contamination. Also known as glue contamination.

Anvil cuts Cuts that penetrate both the face stock and the liner of a label.

Back splits Also known as back slits or liner cuts. Cuts through the backside of the liner. Back slits increase the potential for adhesive contamination.

Basis weight Weight in pounds of a specific number of sheets of paper or stock in a standard size for that particular material.

Beam strength Also known as column strength. Refers to how well the material is able to support itself and remain flat and straight during the printing process.

Butt cut Cut flush to one another, with no extra area between. This cut does not extend through the liner. Butt cut labels may or may not have an edge matrix removed.

Calendering The process of moving paper through metal rolls during manufacturing to smooth and gloss the surface of the paper.

Conversion The process that turns base stock into cut-sheet products designed for specific applications. Conversion includes cutting the base stock to size, perforating the stock, die-cutting, and applying inks and topcoats.

Converters Print material suppliers who take the base stock from the manufacturer and convert it into cut sheet products.

Corner buckler The metal tab at the corner of a paper tray that helps the printer separate one sheet of paper from the stack during the pick process.

Curl Waviness or curvature at the edge of the material that is generally moisture related.

Cut sheet Single piece (page) of paper or label stock.

Debossing Process of pressing an image down into the surface of the label or card stock. See also “Embossing” on page 232.

Delamination The peeling of labels off the backing during the printing process.

Die-cut Labels: Cut of material (face stock) to form individual labels on sheet. Cuts do not penetrate the liner. Card Stock: Cuts made with dies to create the shapes wanted in the stock. Cuts may or may not go completely through the stock. See also “Ties” on page 234.

Driver edge For printers that use a fixed reference for feeding paper through the paper path (as opposed to printers that center paper in the path), the edge of the print material that is positioned next to the hardware reference and that is driven by the rollers in the printer. For most Lexmark printers, the driver edge is the left edge of a portrait page.

Embossing Process of raising the surface of the base material by stamping an image or design with an embossing machine. The machine has a roll with a raised image on the surface. As the print material passes through the machine, the image is pressed into the material. See also “Debossing” on page 232.

Feed How well the stock moves out of the paper tray and through the printer.

Fiber content The material used to manufacture the paper. Most high-quality xerographic paper is made from 100 percent chemically pulped wood. This content provides the paper with a high degree of stability resulting in fewer paper feeding problems and better print quality. Paper containing fibers such as cotton have characteristics that can result in degraded paper feeding.

Fuse grade Qualitative measurement of the adhesion of toner to the printed sheet.

Fusing Printer process of melting toner and adhering it to the print material.

Grain The orientation of the fibers in the print material. Grain short indicates that the fibers run the width of the paper. Grain long indicates that the fibers run the length of the paper.

Ink contamination Transfer of ink from a form to the printer pick mechanism or fuser assembly, which can cause printer contamination.

Laser-perfs Small perforations (20 to 30 perfs per inch) that create little paper dust and debris and do not normally cause nesting. Also known as micro-perfs or data-perfs.

Leading edge The edge of the print material that enters the printer paper path first.

Matrix Unneeded portions of die-cut stock around labels. A stripped matrix is one that is removed to make it easier to peel labels from the liner.

Micro-perfs See “Laser-perfs” on page 233.

Moisture content The amount of moisture in the paper, which affects both print quality and paper feeding. Leave paper in its original wrapper until you are ready to use it. Doing so limits the exposure of the paper to moisture changes that can damage the paper.

Nesting To fit compactly together; to interlock; to stick together.

Offset powder A powder applied during some printing processes to help dry inks.

Oil bleed Migration of materials from the substrate or the adhesive out to the face. This generally occurs in aged materials or materials exposed to extreme temperature changes. Also known as penetration, bleed-through, and bleed.

Ooze Migration of adhesive away from labels, which can cause printer contamination.

Perforation Line of very small holes or slots punched to facilitate tearing. See also “Laser-perfs” on page 233.

Pick The mechanical action the printer performs to remove one sheet of material from the tray.

Pick roller The roller that assists in picking a sheet of material from the tray.

Pick roller assembly A gear-driven pick arm suspended by a counterbalance spring that allows the printer to automatically adjust the pick force necessary for different types of print materials.

Pull strength Maximum strength, or holding power, that a label has before it is separated from the liner.

Release The ability of adhesive to resist label peeling during the printing process.

Roll-over Bending of the paper edge during conversion due to a dull cutting knife.

Semiliquid Having characteristics of both liquid and solid.

Shear strength	Cohesive strength of the adhesive.
Sizing	Additives applied to paper (internally or externally) that improve offset printing qualities and resistance to liquids.
Skew	Slant of printed lines in reference to the edge of the paper due to paper moving through the printer in something other than a straight path.
Smoothness	The degree of smoothness of the print material. If the paper is too rough, the toner does not fuse to the paper properly, resulting in poor print quality. If the paper is too smooth, it can cause paper feeding problems in the printer. Smoothness is measured in Sheffield points; lower values indicate smoother paper.
Splatter	The appearance of black specks around a printed image. Generally related to printing on stock that is too heavy or has a surface that repels toner.
Stacking	How well the paper stacks in the output bin.
Stringers	Small bits of adhesive found on top of a pressure-sensitive material at the die-cut and perforated areas. Stringers are indications of a dull blade and are related to the shear strength of the adhesive.
Stripped edge matrix	Labels with a portion of the area around the outer edge of the cut sheet removed.
Supercalendering	A process where paper passes through heated, polished steel and compressed cotton rolls that "iron" the material to a high gloss, polished finish.
Tenting	The creasing of perforated material when it is flexed.
Thermography	A printing process that raises the ink image or design above the surface of the base material. Also known as electro-thermography.
Ties	Small areas along perforations or die-cuts in the face material of a label (pressure-sensitive material), or in card stock, which are not cut through. Ties help stabilize the form and prevent tearing at the perforations and die-cuts.
Toner	The material that adheres to the paper or print material to create the printed image.
Total strip matrix	Labels that have the unneeded portion of the die-cut stock around the labels, including a portion between the labels, removed to make it easier to peel labels from the backing.
Vellum finish	A finish with a rough surface similar to eggshell and antique finishes. A vellum finish is relatively absorbent, providing good ink penetration.
Zone coating	Placing adhesive in selected areas only. Allows no adhesive areas along edge of labels. Also known as patterned adhesive, pattern coated, dry lap, separator, and strip coated.