Hewlett Packard Enterprise

HPE ProLiant DL380 Gen10 Server Maintenance and Service Guide

Part Number: 30-09167E05-407
Published: November 2021
Edition: 16

HPE ProLiant DL380 Gen10 Server Maintenance and Service Guide

Abstract
This document is for the person who installs, administers, and troubleshoots servers and storage systems. Hewlett Packard Enterprise assumes you are qualified in the servicing of computer equipment and trained in recognizing hazards in products with hazardous energy levels.

Part Number: 30-09167E05-407
Published: November 2021
Edition: 16

© Copyright 2017-2021 Hewlett Packard Enterprise Development LP

Notices

The information contained herein is subject to change without notice. The only warranties for Hewlett Packard Enterprise products and services are set forth in the express warranty statements accompanying such products and services. Nothing herein should be construed as constituting an additional warranty. Hewlett Packard Enterprise shall not be liable for technical or editorial errors or omissions contained herein.

Confidential computer software. Valid license from Hewlett Packard Enterprise required for possession, use, or copying. Consistent with FAR 12.211 and 12.212, Commercial Computer Software, Computer Software Documentation, and Technical Data for Commercial Items are licensed to the U.S. Government under vendor's standard commercial license.

Links to third-party websites take you outside the Hewlett Packard Enterprise website. Hewlett Packard Enterprise has no control over and is not responsible for information outside the Hewlett Packard Enterprise website.

Acknowledgments

Intel ® and Xeon ® are trademarks of Intel Corporation in the United States and other countries.
Microsoft ® and Windows ® are either registered trademarks or trademarks of Microsoft Corporation in the United States and/or other countries.

Revision history

Part number	Publication date	Edition	Summary of changes
30-09167E05-407	November 2021	16	Starting a revision history and updating the power supply removal procedure

Table of contents

1 Illustrated parts catalog

1.1 Mechanical components

1.1.1 Air baffle spare parts

1.1.2 Access panel spare parts

1.1.3 Tertiary PCI riser cage spare part

1.1.4 Primary and secondary PCI riser cage spare part

1.1.5 Chassis ears spare parts

1.1.6 Fan cage spare part

1.1.7 2U bezel spare part

1.1.8 Rail kit spare parts

1.1.9 Miscellaneous blanks kits spare parts

1.1.9.1 Front miscellaneous blanks kit spare parts

1.1.9.2 Rear miscellaneous blanks kit spare parts

1.1.9.3 Rear 2 SFF/miscellaneous blanks and bracket kit spare parts

1.1.9.4 Fan blank, Smart Storage Battery latch, and PCIe retainer kit spare parts

1.1.9.5 Optical drive blank spare part

1.2 System components

1.2.1 DIMM spare parts

1.2.2 HPE 16GB NVDIMM spare part

1.2.3 Persistent memory module spare parts

1.2.4 Processor spare parts

1.2.4.1 First Generation Intel Xeon Scalable Processors

1.2.4.1.1 31XX processor spare parts

1.2.4.1.2 41XX processor spare parts

1.2.4.1.3 51XX processor spare parts

1.2.4.1.4 61xx processor spare parts

1.2.4.1.5 81xx processor spare parts

1.2.4.2 Second Generation Intel Xeon Scalable Processors

1.2.4.2.1 32XX processor spare parts

1.2.4.2.2 42XX processor spare parts

1.2.4.2.3 52XX processor spare parts

1.2.4.2.4 62xx processor spare parts

1.2.4.2.5 82xx processor spare parts

1.2.5 Heatsink spare parts

1.2.6 Power supply spare parts

1.2.7 Controller spare parts

1.2.7.1 Smart Array controller spare parts

1.2.7.2 Host bus adapter spare parts

1.2.7.3 Converged network adapter spare parts

1.2.7.4 Ethernet adapter spare parts

1.2.7.5 Smart I/O (Pensando Distributed Services Platform) spare parts

1.2.8 PCI riser board spare parts

1.2.9 InfiniBand adapter spare parts
1.2.10 FlexibleLOM adapter spare parts
1.2.11 System board spare parts
1.2.12 System battery spare part
1.3 Server options
1.3.1 Drive spare parts
1.3.1.1 Hot-plug drive spare parts
1.3.1.2 Solid state NVMe drive spare parts
1.3.1.3 Solid state M.2 drive spare parts
1.3.1.4 Solid state SAS drive spare parts
1.3.1.5 Solid state SATA drive spare parts
1.3.2 Fan spare parts
1.3.3 Backplane board spare parts
1.3.4 Chassis Intrusion Detection Switch spare part
1.3.5 Rear serial port interface spare part
1.3.6 Accelerator and GPU options spare parts
1.3.7 12Gb SAS Expander Card spare part
1.3.8 Energy pack spare parts
1.3.8.1 HPE Smart Storage Hybrid Capacitor spare part
1.3.8.2 HPE Smart Storage Battery spare part
1.3.9 Power module spare parts
1.3.10 LFF front I/O board spare part
1.3.11 HPE Trusted Platform Module 2.0 spare part
1.3.12 Pensando Distributed Services Platform card spare parts
1.3.13 HPE NS204i-p NVMe OS Boot Device spare parts
1.3.14 Cable spare parts
2 Customer self repair
3 Removal and replacement procedures
3.1 Required tools
3.2 Safety considerations
3.2.1 Preventing electrostatic discharge
3.2.2 Symbols on equipment
3.2.3 Server warnings and cautions
3.3 Preparation procedures
3.3.1 Power down the server
3.3.2 Extend the server from the rack
3.3.3 Remove the server from the rack
3.3.4 Access the product rear panel
3.3.4.1 Release the cable management arm
3.3.5 Accessing the Systems Insight Display
3.3.6 Remove the access panel
3.3.7 Release the full-length expansion board retainer
3.4 Removing the bezel
3.5 Removing and replacing the rack rails

3.6 Removing and replacing the cable management arm
3.7 Removing and replacing a drive blank
3.8 Removing and replacing drives
3.8.1 Removing and replacing a hot-plug drive
3.8.2 Removing and replacing an NVMe drive
3.8.3 Removing and replacing an M.2 SSD
3.9 Removing and replacing the hot-plug fan
3.10 Removing and replacing a power supply blank
3.11 Removing and replacing the AC power supply
3.12 Removing and replacing the HPE 800W Flex Slot Scalable Persistent Memory Power Supply
3.13 Removing the air baffle
3.14 Removing and replacing the Scalable Persistent Memory air baffle
3.15 Removing and replacing the primary or secondary PCIe riser cages
3.16 Removing and replacing the tertiary PCIe riser cage
3.17 Removing and replacing the PCIe riser blank
3.18 Removing and replacing the PCIe riser board
3.19 Removing and replacing an expansion slot blank
3.20 Removing and replacing an expansion board
3.21 Removing and replacing the Pensando DSP DSC-25 2p SFP28 card with the iLO Sideband ALOM Module
3.21.1 Decommissioning the Pensando DSP DSC-25 2p SFP28 card
3.21.2 Removing the Pensando DSP DSC-25 2p SFP28 card with the iLO Sideband ALOM Module
3.21.3 Replacing the Pensando DSP DSC-25 2p SFP28 card with the iLO Sideband ALOM Module
3.22 Removing and replacing a 940QSFP56 x16 adapter and auxiliary card
3.23 Removing and replacing the HPE NS204i-p NVMe OS Boot Device option
3.23.1 Removing and replacing the boot device
3.23.2 Removing and replacing a boot device drive
3.23.2.1 Relocating the M.2 drive retaining latches
3.24 Removing and replacing the fan cage
3.25 Removing and replacing the FlexibleLOM
3.26 Removing and replacing the small form factor universal media bay
3.27 Removing and replacing the LFF power switch module
3.28 Removing and replacing the SFF optical drive
3.29 Removing and replacing the LFF optical drive
3.30 Removing and replacing the 8 SFF drive cage
3.31 Removing and replacing the 8 SFF drive backplane
3.32 Removing and replacing the 2 SFF front drive cage
3.33 Removing and replacing the 2 SFF rear drive bay and riser cage
3.34 Removing and replacing the 2 SFF drive cage
3.35 Removing and replacing the 2 SFF rear drive backplane
3.36 Removing and replacing a 4 LFF midplane cage
3.37 Removing and replacing a 3-bay LFF rear drive cage
3.38 Removing and replacing the LFF backplane assembly
3.39 Removing and replacing a front LFF drive backplane
3.40 Removing and replacing the 3 LFF rear drive backplane

3.41 Removing and replacing a rear serial port interface (primary/secondary)
3.42 Removing and replacing a rear serial port interface (tertiary riser)
3.43 Removing and replacing an SFF power switch module
3.44 Removing and replacing an LFF chassis ear with power/UID
3.45 Removing and replacing an SFF standard chassis ear
3.46 Removing and replacing a GPU enablement board
3.47 Removing and replacing a DIMM
3.47.1 DIMM-processor compatibility
3.48 Removing and replacing an NVDIMM
3.48.1 NVDIMM-processor compatibility
3.48.2 DIMM and NVDIMM population information
3.48.3 NVDIMM sanitization
3.48.4 NVDIMM relocation guidelines
3.48.5 Recovering restored data from an NVDIMM-N DRAM
3.48.6 Configuring the server for NVDIMMs
3.49 Removing and replacing a persistent memory module
3.49.1 Persistent memory module-processor compatibility
3.49.2 Configuring the server for Intel Optane persistent memory 100 series for HPE
3.49.3 Persistent memory module relocation guidelines
3.49.4 Persistent memory module sanitization
3.50 Removing and replacing an energy pack
3.51 Removing and replacing a type -a Smart Array Controller
3.52 Removing and replacing the system battery
3.53 Removing and replacing the system board
3.53.1 Re-entering the server serial number and product ID
3.53.2 Restoring logical NVDIMMs after system board replacement
3.54 HPE Trusted Platform Module 2.0 Gen10 Option
4 Troubleshooting
4.1 Troubleshooting resources
5 Diagnostic tools
5.1 Product QuickSpecs
5.2 UEFI System Utilities
5.2.1 Selecting the boot mode
5.2.2 Secure Boot
5.2.3 Launching the Embedded UEFI Shell
5.3 Intelligent Provisioning
5.3.1 Intelligent Provisioning operation
5.4 HPE Insight Remote Support
5.5 USB support
5.5.1 External USB functionality
5.6 HPE Smart Storage Administrator
5.7 HPE MR Storage Administrator
5.8 HPE InfoSight for servers
5.9 StorCLI

6 Component identification
6.1 Front panel components
6.2 Front panel LEDs and buttons
6.2.1 UID button functionality
6.2.2 Front panel LED power fault codes
6.2.3 Systems Insight Display LEDs
6.2.4 Systems Insight Display combined LED descriptions
6.3 Rear panel components
6.4 Rear panel LEDs
6.5 System board components
6.5.1 System maintenance switch descriptions
6.5.2 DIMM label identification
6.5.3 DIMM slot locations
6.5.4 NVDIMM identification
6.5.4.1 NVDIMM 2D Data Matrix barcode
6.5.5 NVDIMM LED identification
6.5.5.1 NVDIMM-N LED combinations
6.5.5.2 NVDIMM Function LED patterns
6.5.6 Intel Optane persistent memory 100 series for HPE label identification
6.6 Processor, heatsink, and socket components
6.7 Drives
6.7.1 SAS/SATA drive components and LEDs
6.7.2 Smart Carrier NVMe (SCN) drive LED definitions
6.7.3 uFF drive components and LEDs
6.8 Fan bay numbering
6.9 Drive box identification
6.10 Drive bay numbering
6.10.1 Drive bay numbering: Smart Array controller
6.10.2 Drive bay numbering: SAS expander
6.10.3 Drive bay numbering: NVMe drives
6.10.4 uFF drive bay numbering
6.11 Riser components
6.12 HPE Flex Slot Power Supply with Integrated Battery Backup Unit components and LED
6.12.1 Checking the battery backup charge level
6.13 HPE 12G SAS Expander Card port numbering
6.14 HPE Smart Array P824i-p MR Gen10 Controller
6.15 HPE NS204i-p NVMe OS Boot Device components
6.16 HPE NS204i-p NVMe OS Boot Device LED definitions
6.17 HPE InfiniBand HDR/Ethernet 940QSFP 56x16 adapter LEDs
6.18 DSC-25 2-port SFP28 card ports and LEDs
7 Cabling
7.1 HPE ProLiant Gen10 DL Servers Storage Cabling Guidelines
7.2 Cabling diagrams
7.2.1 Cable routing: Front 2SFF drive option for SFF

7.2.2 Cable routing: Front 2SFF drive option for LFF
7.2.3 Cable routing: Front 2SFF drive options (3 position cable)
7.2.4 Cable routing: Front 8SFF drive options
7.2.5 Cable routing: Front 8SFF NVMe/SAS premium drive option
7.2.6 Cable routing: Front 8SFF NVMe drive options
7.2.7 Cable routing: Front 2SFF NVMe drive option for SFF
7.2.8 Cable routing: Front 2SFF NVMe drive option for LFF
7.2.9 Cable routing: Midplane 4LFF drive option
7.2.10 Cable routing: Rear 3LFF drive option
7.2.11 Cable routing: Rear 2SFF drive options
7.2.12 Cable routing: HPE 12G SAS Expander to a controller
7.2.13 Cable routing: Systems Insight Display
7.2.14 Pensando DSP DCS-25 2p SFP28 card cabling
8 Specifications
8.1 Environmental specifications
8.2 Mechanical specifications
8.3 Power supply specifications
8.3.1 HPE 500W Flex Slot Platinum Hot-plug Low Halogen Power Supply
8.3.2 HPE 800W Flex Slot Platinum Hot-plug Low Halogen Power Supply
8.3.3 HPE 800W Flex Slot Titanium Hot-plug Low Halogen Power Supply
8.3.4 HPE 800W Flex Slot Universal Hot-plug Low Halogen Power Supply
8.3.5 HPE 800W Flex Slot -48VDC Hot-plug Low Halogen Power Supply
8.3.6 HPE 800W Flex Slot Scalable Persistent Memory Power Supply
8.3.7 HPE 1600 W Flex Slot Platinum Hot-plug Low Halogen Power Supply
9 Support and other resources
9.1 Accessing Hewlett Packard Enterprise Support
9.2 Accessing updates
9.3 Remote support
9.4 Warranty information
9.5 Regulatory information
9.6 Documentation feedback
10 Acronyms and abbreviations

Illustrated parts catalog

Mechanical components

Hewlett Packard Enterprise continually improves and changes product parts. For complete and current supported parts information, see the **Hewlett Packard Enterprise PartSurfer website**.

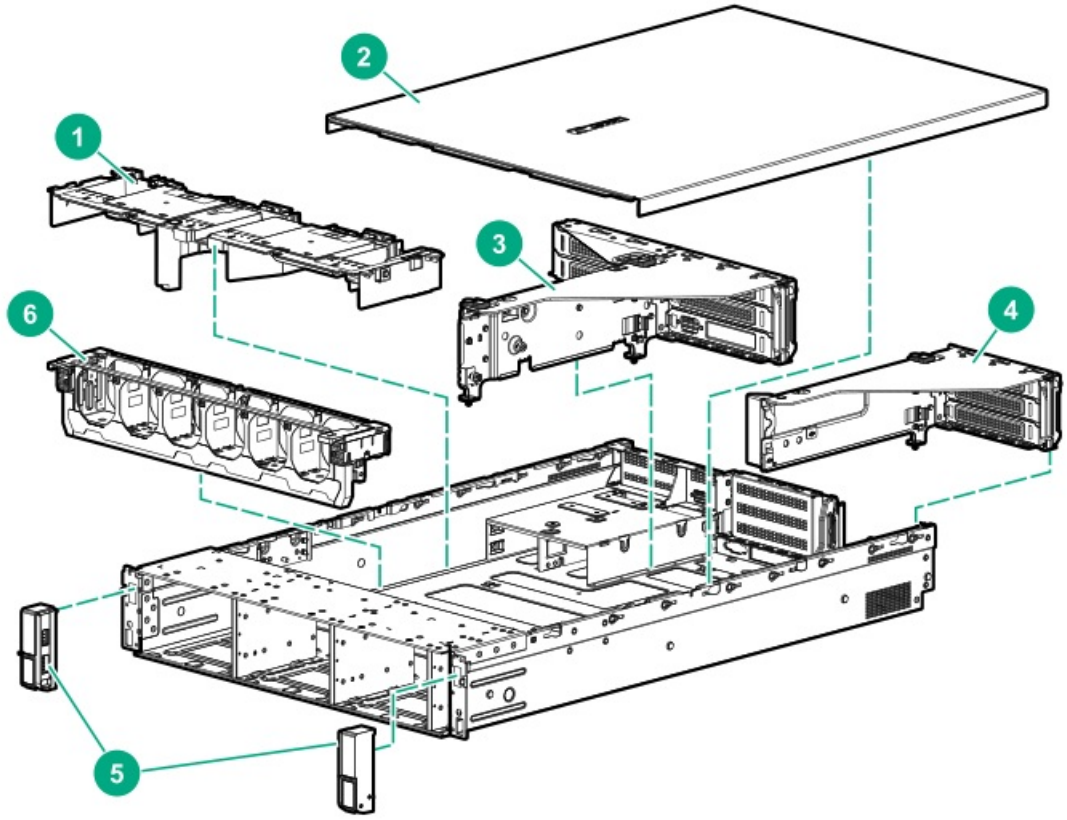

Item	Description
1	Air baffle spare parts
2	Access panel spare parts
3	Tertiary PCI riser cage spare part
4	Primary and secondary PCI riser cage spare part
5	Chassis ears spare parts
6	Fan cage spare part
7	2U bezel spare part*
8	Rail kit spare parts*
9	Miscellaneous blanks kits spare parts*
	• Front miscellaneous blanks kit spare parts
	• Rear miscellaneous blanks kit spare parts
	• Rear 2 SFF/miscellaneous blanks and bracket kit spare parts
	• Fan blank, Smart Storage Battery latch, and PCIe retainer kit spare parts
	• Optical drive blank spare part

* Not shown

For more information, see Removal and replacement procedures.

Air baffle spare parts

Customer self repair: **mandatory**

Description	Spare part number
Air baffle	875054-001
Scalable Persistent Memory air intake baffle	P00869-001

Access panel spare parts

Customer self repair: **mandatory**

Description	Spare part number
Access panel (SFF model)	875052-001
Access panel (LFF model)	875053-001

Tertiary PCI riser cage spare part

Customer self repair: **optional**

Description	Spare part number
Tertiary PCI riser cage	875057-001

Primary and secondary PCI riser cage spare part

Customer self repair: **mandatory**

Description	Spare part number
Primary and secondary PCI riser cage	875056-001

Chassis ears spare parts

Customer self repair: **mandatory**

Description	Spare part number
SFF standard left and right chassis ears kit	875083-001
LFF power/UID left and right chassis ears kit	875084-001

Fan cage spare part

Customer self repair: **mandatory**

Description	Spare part number
Fan cage	875055-001

2U bezel spare part

Customer self repair: **mandatory**

Description	Spare part number
2U bezel	875065-001

Rail kit spare parts

Customer self repair: **mandatory**

Description	Spare part number
SFF 2U easy install rail kit	744114-001
LFF 2U easy install rail kit	744115-001
2U cable management arm	744116-001

Miscellaneous blanks kits spare parts

Front miscellaneous blanks kit spare parts

Customer self repair: **mandatory**

Description	Spare part number
Front miscellaneous blanks kit	875069-001
2 SFF Flex Bay hard drive blank	—
Hard drive box, standard blank	—
Hard drive box blank, NVMe	—
LFF hard drive box blank	—

Rear miscellaneous blanks kit spare parts

Customer self repair: **mandatory**

Description	Spare part number
Rear miscellaneous blanks kit	875067-001
4 LFF backplane bracket (3)	—
Rear 2 SFF serial blank	—
Secondary PCI blank	—
PCI riser cage blank for optional board	—
PCI riser cage blank for optional board, with screw	—
Optional PCI serial blank	—

Rear 2 SFF/miscellaneous blanks and bracket kit spare parts

Customer self repair: **mandatory**

Description	Spare part number
Rear 2 SFF/miscellaneous blanks and bracket kit	875068-001
Rear 2 SFF 2U bracket	—
Rear 2 SFF module blank assembly	—
Tertiary riser blank assembly	—

Fan blank, Smart Storage Battery latch, and PCIe retainer kit spare parts

Customer self repair: **mandatory**

Description	Spare part number
Fan blank, Smart Storage Battery latch, and PCIe retainer kit	875066-001
Smart Storage Battery latch	—
PCIe GPU retainer assembly	—
Tertiary PCI riser cage retainer assembly	—
Fan blank (2)	—

Optical drive blank spare part

Customer self repair: **mandatory**

Description	Spare part number
Optical drive blank	707300-001

System components

Hewlett Packard Enterprise continually improves and changes product parts. For complete and current supported parts information, see the **Hewlett Packard Enterprise PartSurfer website**.

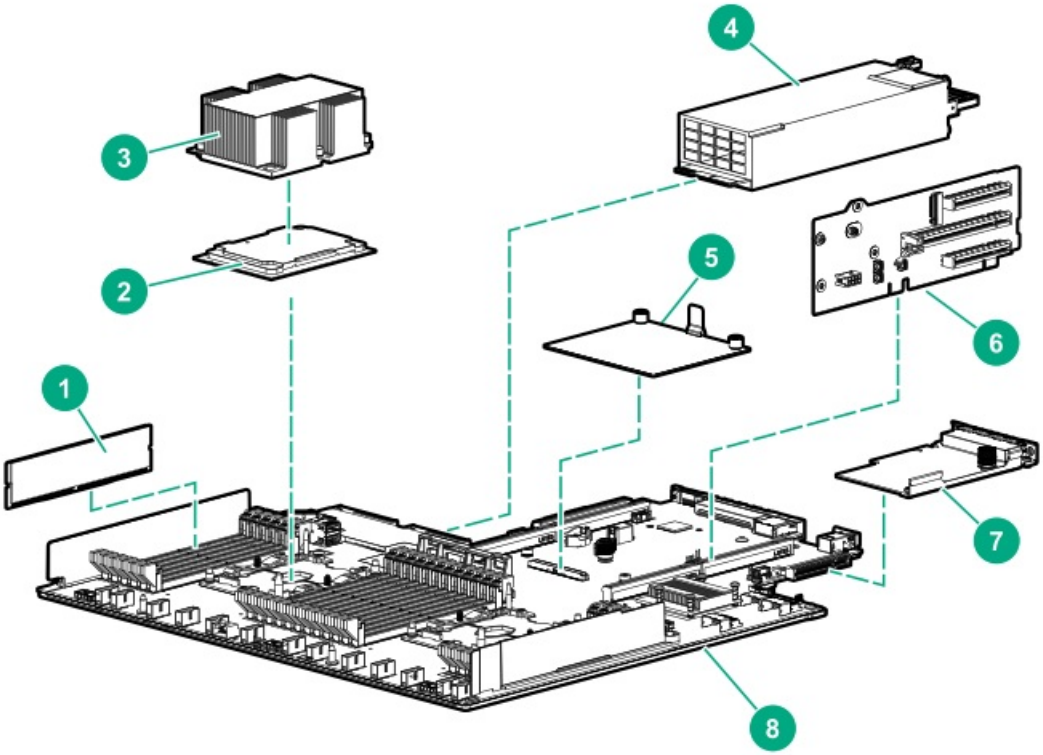

Item	Description
1	DIMM spare parts
	HPE 16GB NVDIMM spare part
	Persistent memory module spare parts
2	Processor spare parts
3	Heatsink spare parts
4	Power supply spare parts
5	Controller spare parts
	• Smart Array controller spare parts
	• Host bus adapter spare parts
	• Converged network adapter spare parts
	• Ethernet adapter spare parts
6	PCI riser board spare parts
7	FlexibleLOM adapter spare parts
8	System board spare parts
9	System battery spare part*

* Not shown

For more information, see Removal and replacement procedures.

DIMM spare parts

Customer self repair: **mandatory**

2666 MT/s DIMMs

Description	Spare part number
DIMM, 8GB PC4-2666V-R, 1Gx8	850879-001
DIMM, 8GB PC4-2666V-R, 512Mx8	878490-001
DIMM, 16GB PC4-2666V-R, 2Rx4	850880-001
DIMM, 16GB PC4-2666V-R, 2Rx8	868846-001
DIMM, 32GB PC4-2666V-R, 2Gx4	850881-001
DIMM, 64GB PC4-2666V-L, 2Gx4	850882-001
DIMM, 128GB PC4-2666V-L, 2Gx4	850883-001

2933 MT/s DIMMs

Description	Spare part number
DIMM, 8GB PC4-2933Y-R, 1Gx8	P06186-001
DIMM, 16GB PC4-2933Y-R, 2Gx4	P06187-001
DIMM, 16GB PC4-2933Y-R, 1Gx8	P06188-001
DIMM, 32GB PC4-2933Y-R, 2Gx4	P06189-001
DIMM, 32GB PC4-2933Y-R, 4Gx4	P39382-001
DIMM, 64GB PC4-2933Y-L, 2Gx4	P06190-001
DIMM, 64GB PC4-2933Y-R, 4Gx4	P06192-001
DIMM, 128GB PC4-2933Y-L, 2Gx4	P06191-001
DIMM, 128GB PC4-2933Y-L, 4Gx4	P16001-001

3200 MT/s DIMMs

Description	Spare part number
DIMM, 32GB PC4-2933AA-R, 4Gx4	P39381-001

HPE 16GB NVDIMM spare part

Customer self repair: **mandatory**

Description	Spare part number
NVDIMM 16GB 1Rx4 NN4-2666V-R	874540-001

Persistent memory module spare parts

Customer self repair: **mandatory**

Description	Spare part number
Intel Optane 128GB PMEM 100 for HPE	844071-001
Intel Optane 256GB PMEM 100 for HPE	844072-001
Intel Optane 512GB PMEM 100 for HPE	844073-001

Processor spare parts

First Generation Intel Xeon Scalable Processors

31XX processor spare parts

Customer self repair: **no**

Description	Spare part number
1.7-GHz Intel Xeon-B 3104 6c 85 W processor	875709-001
1.7-GHz Intel Xeon-B 3106 8c 85 W processor	875710-001

41XX processor spare parts

Customer self repair: **no**

Description	Spare part number
1.8-GHz Intel Xeon-S 4108 8c 85 W processor	875712-001
2.1-GHz Intel Xeon-S 4110 8c 85 W processor	875711-001
2.6-GHz Intel Xeon-S 4112 4c 85 W processor	875714-001
2.2-GHz Intel Xeon-S 4114 10c 85 W processor	875713-001
2.1-GHz Intel Xeon-S 4116 12c 85 W processor	875716-001

51XX processor spare parts

Customer self repair: **no**

Description	Spare part number
2.4-GHz Intel Xeon-G 5115 10c 85 W processor	875715-001
2.0-GHz Intel Xeon-G 5117 14c 105 W processor	P10199-001
2.3-GHz Intel Xeon-G 5118 12c 105 W processor	875717-001
2.2-GHz Intel Xeon-G 5120 14c 105 W processor	875718-001
3.6-GHz Intel Xeon-G 5122 4c 105 W processor	875719-001

61xx processor spare parts

Customer self repair: **no**

Description	Spare part number
2.6-GHz Intel Xeon-G 6126 23c 125 W processor	875720-001
3.4-GHz Intel Xeon-G 6128 6c 115 W processor	875721-001
2.1-GHz Intel Xeon-G 6130 16c 125 W processor	874736-001
2.6-GHz Intel Xeon-G 6132 14c 140 W processor	875722-001
3.2-GHz Intel Xeon-G 6134 8c 130 W processor	875723-001
3.2-GHz Intel Xeon-G 6134M 8c 130 W processor	878083-001
3.0-GHz Intel Xeon-G 6136 12c 150 W processor	875724-001
3.9-GHz Intel Xeon-G 6137 8c 205 W processor	882008-001
2.0-GHz Intel Xeon-G 6138 20c 125 W processor	874735-001
2.3-GHz Intel Xeon-G 6140 18c 140 W processor	874734-001
2.3-GHz Intel Xeon-G 6140M 18c 140 W processor	878084-001
2.6-GHz Intel Xeon-G 6142 16c 150 W processor	874733-001
2.6-GHz Intel Xeon-G 6142M 16c 150 W processor	878085-001
2.8-GHz Intel Xeon-G 6143 16c 205 W processor	882169-001
3.5-GHz Intel Xeon-G 6144 8c 150 W processor	875725-001
3.2-GHz Intel Xeon-G 6146 12c 165 W processor	875726-001
2.4-GHz Intel Xeon-G 6148 20c 150 W processor	874732-001
2.7-GHz Intel Xeon-G 6150 18c 165 W processor	874731-001
2.1-GHz Intel Xeon-G 6152 22c 140 W processor	874730-001
3.0-GHz Intel Xeon-G 6154 18c 200 W processor	875727-001

81xx processor spare parts

Customer self repair: **no**

Description	Spare part number
2.0-GHz Intel Xeon-P 8153 16c 125 W processor	875728-001
3.6-GHz Intel Xeon-P 8156 4c 105 W processor	875732-001
3.0-GHz Intel Xeon-P 8158 12c 150 W processor	875733-001
2.1-GHz Intel Xeon-P 8160 24c 150 W processor	874729-001
2.1-GHz Intel Xeon-P 8160M 24c 150 W processor	878086-001
2.0-GHz Intel Xeon-P 8164 26c 150 W processor	875729-001
2.3-GHz Intel Xeon-P 8165 24c 205 W processor	P00868-001
2.7-GHz Intel Xeon-P 8168 24c 205 W processor	875730-001
2.1-GHz Intel Xeon-P 8170 26c 165 W processor	874728-001
2.1-GHz Intel Xeon-P 8170M 26c 165 W processor	878087-001
2.1-GHz Intel Xeon-P 8176 28c 165 W processor	874727-001
2.1-GHz Intel Xeon-P 8176M 28c 165 W processor	878088-001
2.5-GHz Intel Xeon-P 8180 28c 205 W processor	875731-001
2.5-GHz Intel Xeon-P 8180M 28c 205 W processor	878089-001

32XX processor spare parts

Customer self repair: **no**

Description	Spare part number
1.9-GHz Intel Xeon-B 3204 6c 85 W processor	P11604-001
1.9-GHz Intel Xeon-B 3206R 8c 85 W processor	P19248-001

42XX processor spare parts

Customer self repair: **no**

Description	Spare part number
2.1-GHz Intel Xeon-S 4208 8c 85 W processor	P11605-001
2.2-GHz Intel Xeon-S 4210 10c 85 W processor	P11606-001
2.4-GHz Intel Xeon-S 4210R 10c 100 W processor	P19246-001
2.2-GHz Intel Xeon-S 4214 12c 85 W processor	P11607-001
2.4-GHz Intel Xeon-S 4214R 12c 100 W processor	P19245-001
2.2-GHz Intel Xeon-S 4214Y 12c 85 W processor	P11636-001
2.5-GHz Intel Xeon-S 4215 8c 85 W processor	P11608-001
3.2-GHz Intel Xeon-S 4215R 8c 130 W processor	P25089-001
2.1-GHz Intel Xeon-S 4216 16c 100 W processor	P11609-001

52XX processor spare parts

Customer self repair: **no**

Description	Spare part number
2.5-GHz Intel Xeon-G 5215 10c 85 W processor	P11610-001
2.5-GHz Intel Xeon-G 5215M 10c 85 W processor	P11626-001
2.5-GHz Intel Xeon-G 5215L 10c 85 W processor	P11631-001
3.0-GHz Intel Xeon-G 5217 8c 115 W processor	P11611-001
2.3-GHz Intel Xeon-G 5218 16c 125 W processor	P11612-001
2.3-GHz Intel Xeon-G 5218B 16c 125 W processor	P12532-001
2.3-GHz Intel Xeon-G 5218N 16c 110 W processor	P12021-001
2.1-GHz Intel Xeon-G 5218R 20c 125 W processor	P25090-001
2.2-GHz Intel Xeon-G 5220 18c 125 W processor	P11613-001
2.2-GHz Intel Xeon-G 5220R 24c 150 W processor	P19241-001
2.7-GHz Intel Xeon-G 5220S 18c 125 W processor	P11627-001
3.8-GHz Intel Xeon-G 5222 4c 105 W processor	P11632-001

62xx processor spare parts

Customer self repair: **no**

Description	Spare part number
2.9-GHz Intel Xeon-G 6208U 16c 150 W processor	P25102-001
2.1-GHz Intel Xeon-G 6209U 20c 125 W processor	P11644-001
2.5-GHz Intel Xeon-G 6210U 20c 150 W processor	P11642-001
2.4-GHz Intel Xeon-G 6212U 24c 165 W processor	P11643-001
1.8-GHz Intel Xeon-G 6222V 20c 115 W processor	P12019-001
2.7-GHz Intel Xeon-G 6226 12c 125 W processor	P12008-001
2.9-GHz Intel Xeon-G 6226R 16c 150 W processor	P25094-001
2.1-GHz Intel Xeon-G 6230 20c 125 W processor	P11614-001
2.3-GHz Intel Xeon-G 6230N 20c 125 W processor	P12022-001
2.1-GHz Intel Xeon-G 6230R 26c 150 W processor	P25095-001
3.3-GHz Intel Xeon-G 6234 8c 130 W processor	P12009-001
2.1GHz Intel Xeon-G 6238 22c 140 W processor	P12010-001
2.1GHz Intel Xeon-G 6238L 22c 140 W processor	P12016-001
2.1GHz Intel Xeon-G 6238M 22c 140 W processor	P12014-001
2.2-GHz Intel Xeon-G 6238R 28c 165 W processor	P25096-001
2.6-GHz Intel Xeon-G 6240 18c 150 W processor	P11615-001
2.6GHz Intel Xeon-G 6240L 18c 150 W processor	P12015-001
2.4-GHz Intel Xeon-G 6240R 24c 165 W processor	P25097-001
2.6-GHz Intel Xeon-G 6240Y 18c 150 W processor	P11637-001
2.6GHz Intel Xeon-G 6240M 18c 150 W processor	P12013-001
2.8-GHz Intel Xeon-G 6242 16c 150 W processor	P11616-001
3.1-GHz Intel Xeon-G 6242R 20c 205 W processor	P25098-001
3.6-GHz Intel Xeon-G 6244 8c 150 W processor	P11617-001
3.3GHz Intel Xeon-G 6246 12c 165 W processor	P12018-001
3.4-GHz Intel Xeon-G 6246R 16c 205 W processor	P25099-001
2.5-GHz Intel Xeon-G 6248 20c 150 W processor	P11618-001
3.0-GHz Intel Xeon-G 6248R 24c 205 W processor	P25100-001
3.9-GHz Intel Xeon-G 6250 8c 185 W processor	P25092-001
3.9-GHz Intel Xeon-G 6250L 8c 185 W processor	P28864-001
2.1-GHz Intel Xeon-G 6252 24c 150 W processor	P11619-001
2.3GHz Intel Xeon-G 6252N 24c 150 W processor	P12023-001
3.1-GHz Intel Xeon-G 6254 18c 200 W processor	P11620-001
3.6-GHz Intel Xeon-G 6256 12c 205 W processor	P25093-001
2.7-GHz Intel Xeon-G 6258R 28c 205 W processor	P25101-001
1.9-GHz Intel Xeon-G 6262V 24c 135 W processor	P12020-001

82xx processor spare parts

Customer self repair: **no**

Description	Spare part number
2.2-GHz Intel Xeon-P 8253 24c 135 W processor	P12011-001
3.8-GHz Intel Xeon-P 8256 4c 105 W processor	P12012-001
2.4-GHz Intel Xeon-P 8260 24c 165 W processor	P11621-001
2.4-GHz Intel Xeon-P 8260M 24c 165 W processor	P11628-001
2.4-GHz Intel Xeon-P 8260Y 16c 165 W processor	P11638-001
2.4-GHz Intel Xeon-P 8260L 24c 165 W processor	P11633-001
2.9-GHz Intel Xeon-P 8268 24c 205 W processor	P11622-001
2.7-GHz Intel Xeon-P 8270 26c 205 W processor	P11623-001
2.2-GHz Intel Xeon-P 8276 28c 165 W processor	P11624-001
2.2-GHz Intel Xeon-P 8276M 28c 165 W processor	P11629-001
2.2-GHz Intel Xeon-P 8276L 28c 165 W processor	P11634-001
2.7-GHz Intel Xeon-P 8280 28c 205 W processor	P11625-001
2.7-GHz Intel Xeon-P 8280M 28c 205 W processor	P11630-001
2.7-GHz Intel Xeon-P 8280L 28c 205 W processor	P11635-001

Heatsink spare parts

Customer self repair: **no**

Description	Spare part number
Standard heatsink	875070-001
High-performance heatsink	875071-001
1U 4 LFF midplane cage heatsink	872452-001

Power supply spare parts

Customer self repair: **mandatory**

Description	Spare part number
HPE 800W Flex Slot Universal Hot Plug Low Halogen Power Supply	866727-001
HPE 800W Flex Slot -48VDC Hot Plug Low Halogen Power Supply	866728-001
HPE 500W Flex Slot Platinum Hot-plug Low Halogen Power Supply	866729-001
HPE 800W Flex Slot Platinum Hot Plug Low Halogen Power Supply	866730-001
HPE 800W Flex Slot Titanium Hot Plug Low Halogen Power Supply	866793-001
HPE 800W Flex Slot Scalable Persistent Memory Power Supply	866430-001
HPE 1000W Flex-slot Titanium 96%	P44412-001
HPE 1600W Flex Slot Platinum Hot Plug Low Halogen Power Supply	863373-001

Controller spare parts

Smart Array controller spare parts

Customer self repair: **mandatory**

Description	Spare part number
HPE Smart Array E208e-p SR Gen10 Controller	836267-001
HPE Smart Array E208i-a SR Gen10 Controller	836259-001
HPE Smart Array E208i-p SR Gen10 Controller	836266-001
HPE Smart Array P408e-p SR Gen10 Controller	836270-001
HPE Smart Array P408i-a SR Gen10 Controller	836260-001
HPE Smart Array P408i-p SR Gen10 Controller	836269-001
HPE Smart Array P816i-a SR Gen10 Controller	836261-001
HPE Smart Array P824i-p MR Gen10 Controller	871043-001

Host bus adapter spare parts

Customer self repair: **mandatory**

Description	Spare part number
HPE SN1600Q 32Gb 1p FC HBA	868140-001
HPE SN1600Q 32Gb 2p FC HBA	868141-001
HPE SN1600E 32Gb 2p FC HBA	869999-001
HPE 81Q PCI-e FC HBA	489190-001
HPE SN1200E 16Gb 1p FC HBA	870001-001
HPE SN1200E 16Gb 2p FC HBA	870002-001
HPE 82Q 8Gb Dual Port PCI-e FC HBA	489191-001
HPE StoreFabric SN1100E 4p 16Gb FC HBA	853008-001
HPE StoreFabric 84E 4-port 8Gb FC HBA	780686-001
HPE 81E 8Gb SP PCI-e FC HBA	697889-001
HPE 82E 8Gb Dual-port PCI-e FC HBA	697890-001
HPE StoreFabric 84Q 4p 8Gb FC HBA	853009-001
HPE SN1100Q 16Gb 1p FC HBA	863010-001
HPE SN1100Q 16Gb 2p FC HBA	853011-001

Converged network adapter spare parts

Customer self repair: **mandatory**

Description	Spare part number
HPE CN1100R 2P Converged Network Adapter	706801-001
HPE StoreFabric CN1100R-T 10Gb Converged Network Adapter	872605-001
HPE StoreFabric CN1200E 10Gb Converged Network Adapter	767078-001
HPE StoreFabric CN1200E-T 10Gb Converged Network Adapter	827607-001

Ethernet adapter spare parts

Customer self repair: **mandatory**

Description	Spare part number
HPE Ethernet 10Gb 2P 524SFP+ Adapter	P11585-001
HPE Ethernet 10Gb 2P 548SFP+ Adapter	P12531-001
HPE Ethernet 10/25Gb 2-port 642SFP28 Adapter	P25987-001

Smart I/O (Pensando Distributed Services Platform) spare parts

Customer self repair: **optional**

Description	Spare part number
Pensando Distributed Services Platform DSC-25 10/25G 2-port SFP28 card [1]	P27682-001

[1] To use with the accompanying Pensando DSP iLO Sideband ALOM Module, the Smart I/O card must be installed on slot 3 of the primary riser.

PCI riser board spare parts

Customer self repair: **optional**

Description	Spare part number
2 x8 x16 PCIe M.2 riser	877946-001
2 x8 x16 PCIe riser	875058-001
x16 x16 PCIe S1/2 riser	875059-001
x16 x16 PCIe S2/3 riser	875060-001
x16 PCIe tertiary riser	875061-001
2 x8 PCIe tertiary riser	877947-001
2 Slim SAS tertiary riser	875062-001
1-S x16 1U riser	875085-001
3 x8/x1 Slim SAS riser	875086-001
Quad Slim SAS riser	875087-001
3 x16 GPU riser	P19163-001

InfiniBand adapter spare parts

Customer self repair: **mandatory**

The 940QSFP56 x16 adapter must be installed in PCIe slot 2 and the auxiliary card must be installed in PCIe slot 3.

Description	Spare part number
HPE InfiniBand HDR100/Ethernet 1-port 940QSFP56 x16 Adapter	P08356-001
HPE InfiniBand HDR100/Ethernet 100Gb 2-port 940QSFP56 x16 Adapter	P08355-001
HPE InfiniBand HDR/Ethernet 200Gb 1-port 940QSFP56 x16 Adapter	P08354-001
HPE InfiniBand HDR PCIe G3 Auxiliary card with 150 mm cable kit [1]	P10330-001
HPE InfiniBand HDR PCIe G3 Auxiliary card with 350 mm cable kit [1]	P10331-001

[1] Choose the cable length based on the distance between the adapter card slot and the auxiliary card slot.

FlexibleLOM adapter spare parts

Customer self repair: **mandatory**

Description	Spare part number
HPE InfiniBand FDR/EN 40Gb 2-port, 544+ FLR-QSFP Adapter	764737-001
HPE InfiniBand FDR/EN 40Gb 2-port, 544+ QSFP Adapter	764736-001
HPE Ethernet 10/25Gb 2-port 640FLR-SFP28 Adapter	840139-001
HPE Ethernet 10/25Gb 2-port 631FLR-SFP28 Adapter	840133-001
HPE Ethernet 10/25Gb 2-port 622FLR-SFP28 Adapter	869572-001
HPE Ethernet 10Gb 2-port 537FLR-SFP+ Adapter	P12925-001
HPE Ethernet 10Gb 2-port 562FLR-SFP+ Adapter	790317-001
HPE Ethernet 10Gb 2-port 562FLR-T Adapter	840138-001
HPE FlexFabric 10Gb 4-port 536FLR-T Adapter	768082-001
HPE Ethernet 10Gb 2-port 535FLR-T Adapter	854177-001
HPE FlexFabric 10Gb 2-port 534FLR-SFP+ Adapter	701531-001
HPE FlexFabric 10Gb 2-port 533FLR-T Adapter	701534-001
HPE Ethernet 1Gb 4-port 331FLR Adapter	789897-001
HPE Ethernet 1Gb 4-port 366FLR Adapter	669280-001

System board spare parts

Customer self repair: **optional**

Description	Spare part number
System board (DL380), first generation Intel Xeon Scalable processors only	875073-001
System board (DL388)	875074-001
System board (DL380), first and second generation Intel Xeon Scalable processors	P11782-001
System board (DL388), first and second generation Intel Xeon Scalable processors	P08036-001
System board without NIC (DL380)	P19928-001
System board without NIC (DL388)	P19927-001
System board blank	P19929-001

System battery spare part

Customer self repair: **mandatory**

Description	Spare part number
System battery	319603-001

Server options

Hewlett Packard Enterprise continually improves and changes product parts. For complete and current supported parts information, see the **Hewlett Packard Enterprise PartSurfer website**.

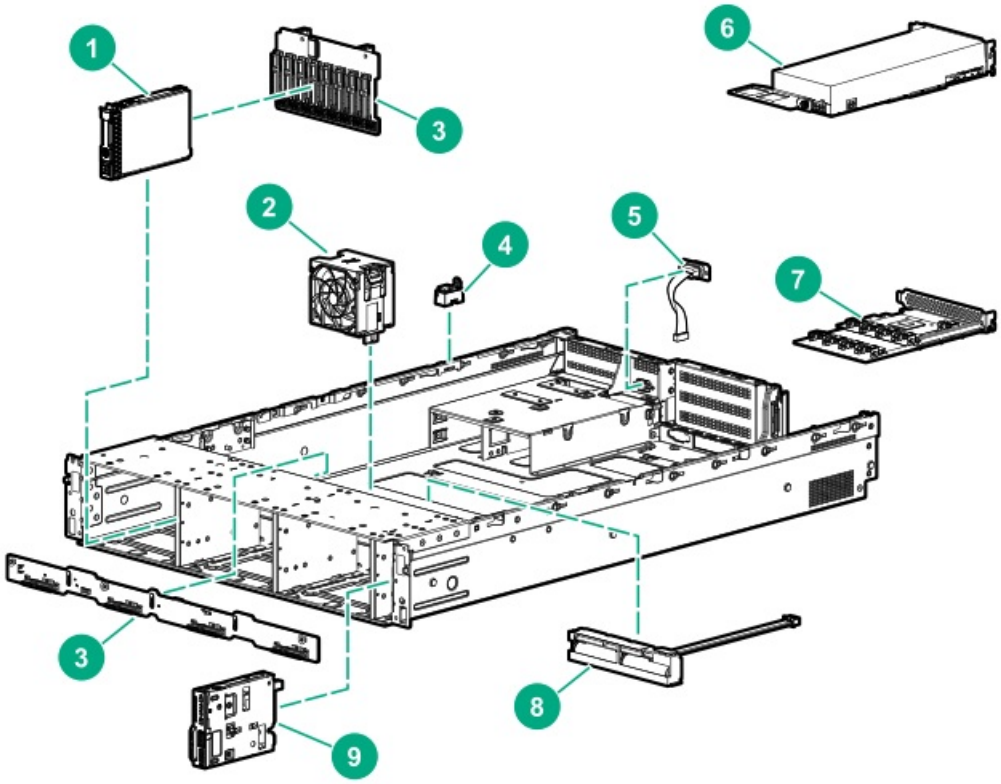

Item	Description
1	Drive spare parts
	• Hot-plug drive spare parts
	• Solid state NVMe drive spare parts
	• Solid state M.2 drive spare parts
	• Solid state SAS drive spare parts
	• Solid state SATA drive spare parts
2	Fan spare parts
3	Backplane board spare parts
4	Chassis Intrusion Detection Switch spare part
5	Rear serial port interface spare part
6	Accelerator and GPU options spare parts
7	12Gb SAS Expander Card spare part
8	Energy pack spare parts
9	Power module spare parts
10	LFF front I/O board spare part *
11	HPE Trusted Platform Module 2.0 spare part *
12	Pensando Distributed Services Platform card spare parts *
13	HPE NS204i-p NVMe OS Boot Device spare parts*
14	Cable spare parts*

* Not shown

For more information, see Removal and replacement procedures.

Drive spare parts

Hot-plug drive spare parts

Customer self repair: **mandatory**

LFF drives

Description	Spare part number
1TB SATA 7.2K LFF SC DS HDD	862128-001
1TB SAS 7.2K LFF SC DS HDD	846612-001
2TB SAS 12G 7.2K LFF SC DS HDD	872744-001
2TB SAS 7.2K LFF SC HDD	819078-001
2TB SATA 7.2K 6G LFF SC DS HDD	872771-001
2TB SATA 7.2K LFF SC HDD	862126-001
3TB SATA 7.2K LFF SC DS HDD	862129-001
3TB SAS 7.2K LFF SC DS HDD	846614-001
4TB SAS 7.2K LFF SC 512e DS HDD	862141-001
4TB SAS 12G 7.2K LFF SC DS HDD	872745-001
4TB SAS 7.2K LFF SC HDD	819079-001
4TB SATA 7.2K 6G LFF SC DS HDD	872772-001
4TB SATA 7.2K LFF SC HDD	862127-001
4TB SATA 7.2K LFF SC 512e DS HDD	862139-001
6TB SATA 7.2K LFF SC DS HDD	846608-001
6TB SATA 7.2K LFF SC 512e DS HDD	862138-001
6TB SAS 7.2K LFF SC 512e DS HDD	862140-001
6TB SAS 7.2K LFF SC DS HDD	846610-001
8TB SATA 7.2K LFF SC He 512e DS HDD	861609-001
8TB SATA 7.2K LFF SC 512e DS HDD	820033-001
8TB SAS 7.2K LFF SC He 512e DS HDD	861607-001
8TB SAS 7.2K LFF SC 512e DS HDD	820032-001
10TB SAS 7.2K LFF SC He 512e DS HDD	857965-001
10TB SAS 7.2K LFF DS He LP HDD	P11186-001
10TB SATA 7.2K LFF DS He LP HDD	P11184-001
10TB SATA 7.2K LFF SC He 512e DS HDD	857967-001
10TB SAS 7.2K LFF DS He ST HDD	P11187-001
14TB SAS 7.2K LFF DS He SC HDD	P11188-001
14TB SAS 7.2K LFF LP He 512e DS HDD	P11518-001
14TB SATA 7.2K LFF DS He SC HDD	P11185-001
14TB SATA 7.2K LFF LP He 512e DS HDD	P11519-001
HPE 16TB SATA 7.2K LFF ISE He LP HDD	P25244-001
HPE 16TB SAS 7.2K LFF ISE He LP HDD	P25245-001
HPE 16TB SATA 7.2K LFF ISE He SC HDD	P25246-001
HPE 16TB SAS 7.2K LFF ISE He SC HDD	P25247-001

SFF drives

Description	Spare part number
300GB SAS 10k SFF SC HDD	785410-001
300GB SAS 10K SFF SC DS HDD	872735-001
300GB SAS 15K SFF SC HDD	759546-001
300GB SAS 15K SFF SC DS HDD	870792-001
450GB SAS 15K SFF SC HDD	759547-001
600GB SAS 10K SFF SC DS HDD	872736-001
600GB SAS 10K SFF SC HDD	781577-001
600GB SAS 15K SFF SC DS HDD	870794-001
600GB SAS 15K SFF SC 512e DS HDD	870797-001
600GB SAS 15K SFF SC HDD	759548-001
600GB SAS 15K SFF SC 512e HDD	748435-001
900GB SAS 10K SFF SC HDD	785411-001
900GB SAS 15K SFF SC DS HDD	870795-001
900GB SAS 15K SFF SC 512e DS HDD	870798-001
1TB SAS 7.2K SFF SC DS HDD	832984-001
1TB SAS 7.2K SFF SC 512e DS HDD	765872-001
1TB SATA 7.2K SFF SC 512e DS HDD	765868-001
1TB SATA 7.2K SFF SC DS HDD	656108-001
1.2TB SAS 10K SFF SC HDD	781578-001
1.2TB SAS 10K SFF SC DS HDD	872737-001
1.8TB SAS 10K SFF SC 512e DS HDD	872738-001
1.8TB SAS 10K SFF SC 512e HDD	791055-001
2TB SAS 7.2K SFF SC 512e DS HDD	765873-001
2TB SATA 7.2K SFF SC 512e DS HDD	765869-001

Solid state NVMe drive spare parts

Customer self repair: **mandatory**

Description	Spare part number
HPE 400GB NVMe x4 WI SFF SCN SSD	765059-001
HPE 400GB NVMe x4 RI SFF SCN SSD	765067-001
HPE 400GB NVMe x4 MU SFF SCN SSD	765063-001
HPE 800GB NVMe x4 WI SFF SCN SSD	765060-001
HPE 800GB NVMe x4 MU SFF SCN SSD	765064-001
HPE 800GB NVMe x4 MU SFF SCN DS SSD	P10648-001
HPE 800GB NVMe x4 MU SFF SCN U.3 SSD	P26422-001
HPE 800GB NVMe PERF MU SFF U.3 SCN DS SSD	P20754-001
HPE 800GB NVMe MAIN MU SFF SCN U.3 SSD	P28066-001
HPE 800GB NVMe MAIN MU SFF SCN U.3 SSD	P20598-001
HPE 800GB NVMe MAIN MU SFF SC U.3 SSD	P20597-001
HPE 960GB NVMe x4 RI SFF SCN DS SSD	P10645-001
HPE 960GB NVMe x4 RI SFF SCN DS SSD	P10652-001
HPE 960GB NVMe x4 RI SFF SCN U.3 SSD	P26423-001
HPE 960GB NVMe PERF RI SFF SCN U.3 SSD	P20764-001
HPE 960GB NVMe MAIN RI SFF SCN U.3 SSD	P28068-001
HPE 960GB NVMe MAIN RI SFF SCN U.3 SSD	P20611-001
HPE 960GB NVMe MAIN RI SFF SC U.3 SSD	P20610-001
HPE 1.2TB NVMe x4 RI SFF SCN SSD	765068-001
HPE 1.6TB NVMe x4 WI SFF SCN SSD	765061-001
HPE 1.6TB NVMe x4 MU SFF SCN SSD	765065-001
HPE 1.6TB NVMe x4 MU SFF SCN DS SSD	P10470-001
HPE 1.6TB NVMe x4 MU SFF SCN DS SSD	P10649-001
HPE 1.6TB NVMe x4 MU SFF RW DS SSD	P12435-001
HPE 1.6TB NVMe x4 MU SFF SCN U.3 SSD	P26414-001
HPE 1.6TB NVMe PERF MU SFF U.3 SCN SSD	P20755-001
HPE 1.6TB NVMe MAIN MU SFF SCN U.3 SSD	P20794-001
HPE 1.6TB NVMe MAIN MU SFF SCN U.3 SSD	P20600-001
HPE 1.6TB NVMe MAIN MU SFF SC U.3 SSD	P20599-001
HPE 1.92TB NVMe x4 RI SFF SCN DS SSD	P10466-001
HPE 1.92TB NVMe x4 RI SFF SCN DS SSD	P10646-001
HPE 1.92TB NVMe x4 RI SFF SCN DS SSD	P10653-001
HPE 1.92TB NVMe x4 RI SFF SCN U.3 SSD	P26418-001
HPE 1.92TB NVMe PERF RI SFF SCN U.3 SSD	P20765-001
HPE 1.92TB NVMe PERF RI SFF SCN U.3 SSD	P20802-001
HPE 1.92TB NVMe MAIN RI SFF SC U.3 SSD	P20612-001
HPE 1.92TB NVMe MAIN RI SFF SCN U.3 SSD	P20613-001
HPE 2TB NVMe x4 MU SFF SCN SSD	765066-001
HPE 2TB NVMe x4 RI SFF SCN SSD	765069-001

Description	Spare part number
HPE 2TB NVMe x4 WI SFF SCN SSD	765062-001
HPE 3.2TB NVMe x4 MU SFF SCN DS SSD	P10471-001
HPE 3.2TB NVMe x4 MU SFF SCN DS SSD	P10650-001
HPE 3.2TB NVMe x4 MU SFF SCN U.3 SSD	P26415-001
HPE 3.2TB NVMe PERF MU SFF U.3 SCN SSD	P20756-001
HPE 3.2TB NVMe MAIN MU SFF SCN U.3 SSD	P20795-001
HPE 3.2TB NVMe MAIN MU SFF SCN U.3 SSD	P20602-001
HPE 3.2TB NVMe MAIN MU SFF SC U.3 SSD	P20601-001
HPE 3.84TB NVMe x4 RI SFF SCN DS SSD	P10467-001
HPE 3.84TB NVMe x4 RI SFF SCN DS SSD	P10647-001
HPE 3.84TB NVMe x4 RI SFF SCN DS SSD	P10654-001
HPE 3.84TB NVMe x4 RI SFF RW DS SSD	P12430-001
HPE 3.84TB NVMe x4 RI SFF SCN U.3 SSD	P26419-001
HPE 3.84TB NVMe PERF RI SFF SCN U.3 SSD	P20766-001
HPE 3.84TB NVMe PERF RI SFF SCN U.3 SSD	P20803-001
HPE 3.84TB NVMe MAIN RI SFF SCN U.3 SSD	P20614-001
HPE 3.84TB NVMe MAIN RI SFF SCN U.3 SSD	P20615-001
HPE 3.84TB NVMe MAIN RI SFF SC U.3 SSD	P20614-001
HPE 6.4TB NVMe x4 MU SFF SCN DS SSD	P10472-001
HPE 6.4TB NVMe x4 MU SFF SCN DS SSD	P10651-001
HPE 6.4TB NVMe x4 MU SFF SCN U.3 SSD	P26416-001
HPE 6.4TB NVMe PERF MU SFF U.3 SCN SSD	P20757-001
HPE 6.4TB NVMe MAIN MU SFF SCN U.3 SSD	P20796-001
HPE 6.4TB NVMe MAIN MU SFF SCN U.3 SSD	P20604-001
HPE 6.4TB NVMe MAIN MU SFF SC U.3 SSD	P20603-001
HPE 7.68TB NVMe x4 RI SFF SCN DS SSD	P10468-001
HPE 7.68TB NVMe x4 RI SFF SCN DS SSD	P10655-001
HPE 7.68TB NVMe x4 RI SFF SCN U.3 SSD	P26420-001
HPE 7.68TB NVMe PERF RI SFF SCN U.3 SSD	P20767-001
HPE 7.68TB NVMe PERF RI SFF SCN U.3 SSD	P20804-001
HPE 7.68TB NVMe MAIN RI SFF SCN U.3 SSD	P20606-001
HPE 7.68TB NVMe MAIN RI SFF SC U.3 SSD	P20605-001
HPE 12.8TB NVMe x4 MU SFF SCN U.3 SSD	P26417-001
HPE 12.8TB NVMe MAIN MU SFF SCN U.3 SSD	P20797-001
HPE 15.36TB NVMe x4 RI SFF SCN DS SSD	P10656-001
HPE 15.36TB NVMe x4 RI SFF SCN U.3 SSD	P26421-001
HPE 15.36TB NVMe PERF RI SFF SCN U.3 SSD	P20805-001

Solid state M.2 drive spare parts

Customer self repair: **mandatory**

Description	Spare part number
HPE 120GB SATA RI uFF Dual M.2 Kit	831995-001
HPE 120GB SATA RI uFF M.2 Kit	781565-001
HPE 240GB SATA RI M.2 2280 SSD	P27211-001
HPE 340GB SATA RI uFF Dual M.2 Kit	781566-001
HPE 340GB SATA RI uFF M.2 Kit	781566-001
HPE 2x240GB SATA RI M.2 SFF SCM SSD kit	P25248-001
HPE 2x480GB SATA MU M.2 SFF SCM SSD kit	P25249-001
HPE 480GB SATA MU M.2 2280 SSD	P27212-001
HPE 960GB SATA MU M.2 2280 SSD	P27213-001

Solid state SAS drive spare parts

Customer self repair: **mandatory**

LFF drives

Description	Spare part number
HPE 800GB SAS MU LFF LPC DS SSD	P06579-001
HPE 800GB SAS MU LFF SCC DS SSD	P06578-001
HPE 960GB SAS MU LFF SCC VS DS SSD	P10605-001
HPE 960GB SAS MU LFF LPC VS DS SSD	P10606-001
HPE 960GB SAS MU LFF LPC MV SSD	P37070-001
HPE 1.6TB SAS MU LFF LPC DS SSD	P06581-001
HPE 1.92TB SAS MU LFF SCC VS DS SSD	P10608-001
HPE 1.92TB SAS MU LFF LPC VS DS SSD	P10609-001
HPE 1.92TB SAS MU LFF SCC MV SSD	P37072-001
HPE 3.84TB SAS MU LFF LPC VS DS SSD	P10611-001

SFF drives

Description	Spare part number
HPE 400GB SAS MU SFF SC DS SSD	P09922-001
HPE 400GB SAS MU SFF SC DS SSD	P06576-001
HPE 400GB SAS MU SFF SC SSD	822784-001
HPE 400GB SAS WI SFF SC DS SSD	P09947-001
HPE 400GB SAS WI SFF SC DS SSD	P06600-001
HPE 400GB SAS WI SFF ST DS SSD	P06601-001
HPE 400GB SAS WI SFF SC SSD	P22585-001
HPE 400GB SAS WI SFF SC SSD	P37176-001
HPE 480GB SAS RI SFF SC SSD	817047-001
HPE 800GB SAS MU SFF SC DS SSD	P09923-001
HPE 800GB SAS MU SFF SC DS SSD	P06577-001
HPE 800GB SAS MU SFF SC SSD	822786-001
HPE 800GB SAS WI SFF SC SSD	P37177-001
HPE 800GB SAS WI SFF SC DS SSD	P09948-001
HPE 800GB SAS WI SFF SC DS SSD	P06602-001
HPE 800GB SAS WI SFF ST DS SSD	P06603-001
HPE 800GB SAS MU SFF SC SSD	P20838-001
HPE 800GB SAS MU SFF SC SSD	P37171-001
HPE 800GB SAS WI SFF SC SSD	P22586-001
HPE 960GB SAS RI SFF SC DS SSD	P06596-001
HPE 960GB SAS RI SFF SC SSD	817049-001
HPE 960GB SAS RI SFF SC VS DS SSD	P10637-001
HPE 960GB SAS MU SFF SC VS DS SSD	P10604-001
HPE 960GB SAS RI SFF SC SSD	P20833-001

Description	Spare part number
HPE 960GB SAS RI SFF SC SSD	P37166-001
HPE 960GB SAS RI SFF SC MV SSD	P37064-001
HPE 960GB SAS MU SFF SC MV SSD	P37068-001
HPE 1.6TB SAS MU SFF SC DS SSD	P09924-001
HPE 1.6TB SAS MU SFF SC DS SSD	P06580-001
HPE 1.6TB SAS MU SFF SC SSD	822788-001
HPE 1.6TB SAS WI SFF SC DS SSD	P09949-001
HPE 1.6TB SAS WI SFF SC DS SSD	P06604-001
HPE 1.6TB SAS MU SFF SC SSD	P20839-001
HPE 1.6TB SAS MU SFF SC SSD	P37172-001
HPE 1.6TB SAS WI SFF SC SSD	P22587-001
HPE 1.6TB SAS WI SFF SC SSD	P37178-001
HPE 1.92TB SAS RI SFF SC DS SSD	P06597-001
HPE 1.92TB SAS RI SFF SC SSD	817051-001
HPE 1.92TB SAS RI SFF SC VS DS SSD	P10638-001
HPE 1.92TB SAS MU SFF SC VS DS SSD	P10607-001
HPE 1.92TB SAS RI SFF SC SSD	P20834-001
HPE 1.92TB SAS RI SFF SC SSD	P37167-001
HPE 1.92TB SAS RI SFF SC MV SSD	P37065-001
HPE 1.92TB SAS MU SFF SC MV SSD	P37071-001
HPE 3.2TB SAS MU SFF SC DS SSD	P09925-001
HPE 3.2TB SAS MU SFF SC DS SSD	P06582-001
HPE 3.2TB SAS MU SFF SC SSD	822790-001
HPE 3.2TB SAS WI SFF SC DS SSD	P06605-001
HPE 3.2TB SAS MU SFF SC SSD	P20840-001
HPE 3.2TB SAS MU SFF SC SSD	P37173-001
HPE 3.2TB SAS WI SFF SC SSD	P37179-001
HPE 3.84TB SAS RI SFF SC DS SSD	P06598-001
HPE 3.84TB SAS RI SFF SC SSD	817053-001
HPE 3.84TB SAS RI SFF SC VS DS SSD	P10639-001
HPE 3.84TB SAS MU SFF SC VS DS SSD	P10610-001
HPE 3.84TB SAS RI SFF SC SSD	P20835-001
HPE 3.84TB SAS RI SFF SC SSD	P37168-001
HPE 3.84TB SAS RI SFF SC MV SSD	P37066-001
HPE 3.84TB SAS MU SFF SC MV SSD	P37074-001
HPE 6.4TB SAS MU SFF SC DS SSD	P09926-001
HPE 6.4TB SAS MU SFF SC DS SSD	P06583-001
HPE 6.4TB SAS MU SFF SC SSD	P20841-001
HPE 6.4TB SAS MU SFF SC SSD	P37174-001
HPE 7.68TB SAS RI SFF SC DS SSD	P06599-001
HPE 7.68TB SAS RI SFF SC VS DS SSD	P10640-001
HPE 7.68TB SAS RI SFF SC SSD	P20836-001

Description	Spare part number
HPE 7.68TB SAS RI SFF SC SSD	P37169-001
HPE 7.68TB SAS RI SFF SC MV SSD	P37067-001
HPE 15.3TB SAS RI SFF SC SSD	P20837-001
HPE 15.3TB SAS RI SFF SC SSD	P37170-001
HPE 12.8TB SAS MU SFF SC SSD	P37175-001
HPE 30.72TB SAS RI SFF SC SS	P22580-001

Solid state SATA drive spare parts

Customer self repair: **mandatory**

LFF drives

Description	Spare part number
HPE 200GB SATA WI LFF SCC SSD	805386-001
HPE 400GB SATA 6G WI LFF SCC DS SSD	872513-001
HPE 400GB SATA WI LFF SCC SSD	805388-001
HPE 480GB SATA RI LFF SCC DS SSD	P09845-001
HPE 480GB SATA 6G MU LFF SCC DS SSD	872519-001
HPE 480GB SATA 6G RI LFF SCC DS SSD	869578-001
HPE 480GB SATA RI LFF LPC SSD	P21086-001
HPE 480GB SATA MU LFF SCC SSD	P21092-001
HPE 800GB SATA 6G WI LFF SCC DS SSD	872515-001
HPE 800GB SATA WI LFF SCC SSD	805390-001
HPE 960GB SATA RI LFF SCC DS SSD	P09846-001
HPE 960GB SATA RI LFF LPC DS SSD	P09847-001
HPE 960GB SATA MU LFF SCC DS SSD	P09910-001
HPE 960GB SATA 6G MU LFF SCC DS SSD	872521-001
HPE 960GB SATA MU LFF LPC SSD	P21093-001
HPE 1.2TB SATA WI LFF SCC SSD	805392-001
HPE 1.6TB SATA 6G WI LFF SCC DS SSD	872517-001
HPE 1.6TB SATA 6G RI LFF SCC DS SSD	869582-001
HPE 1.92TB SATA MU LFF SCC DS SSD	P09913-001
HPE 1.92TB SATA MU LFF LPC DS SSD	P09914-001
HPE 1.92TB SATA RI LFF SCC DS SSD	P09848-001
HPE 1.92TB SATA RI LFF LPC SSD	P21087-001
HPE 1.92TB SATA MU LFF SCC SSD	P21094-001
HPE 1.92TB SATA MU LFF LPC SSD	P21095-001

SFF drives

Description	Spare part number
HPE 150GB SATA 6G RI SFF SC DS SSD	869575-001
HPE 200GB SATA WI SFF SC SSD	805385-001
HPE 240GB SATA RI SFF RW DS SSD	P09844-001
HPE 240GB SATA RI SFF SC DS SSD	P08565-001
HPE 240GB SATA 6G RI SFF SC DS SSD	868924-001
HPE 240GB SATA 6G RI SFF SC DS SSD	869576-001
HPE 240GB SATA RI SFF SC MV SSD	P18481-001
HPE 240GB SATA RI SFF SC SSD	P21080-001
HPE 400GB SATA 6G WI SFF SC DS SSD	872512-001
HPE 400GB SATA WI SFF SC SSD	805387-001

Description	Spare part number
HPE 480GB SATA 6G RI SFF SC DS SSD	868926-001
HPE 480GB SATA 6G MU SFF SC DS SSD	872518-001
HPE 480GB SATA MU SFF SC MV SSD	P18477-001
HPE 480GB SATA RI SFF SC MV SSD	P18482-001
HPE 480GB SATA 6G RI SFF SC DS SSD	869577-001
HPE 480GB SATA MU SFF SC DS SSD	P09907-001
HPE 480GB SATA MU SFF RW DS SSD	P09908-001
HPE 480GB SATA MU SFF SC DS SSD	P08620-001
HPE 480GB SATA RI SFF SC DS SSD	P08567-001
HPE 480GB SATA RI SFF SC SSD	P21081-001
HPE 480GB SATA MU SFF SC SSD	P21088-001
HPE 800GB SATA 6G WI SFF SC DS SSD	872514-001
HPE 800GB SATA WI SFF SC SSD	805389-001
HPE 960GB SATA MU SFF SC DS SSD	P09909-001
HPE 960GB SATA MU SFF RW DS SSD	P09911-001
HPE 960GB SATA MU SFF SC DS SSD	P08622-001
HPE 960GB SATA RI SFF SC DS SSD	P08569-001
HPE 960GB SATA 6G RI SFF SC DS SSD	868928-001
HPE 960GB SATA 6G RI SFF SC DS SSD	869580-001
HPE 960GB SATA 6G MU SFF SC DS SSD	872520-001
HPE 960GB SATA MU SFF SC MV SSD	P18478-001
HPE 960GB SATA RI SFF SC MV SSD	P18483-001
HPE 960GB SATA RI SFF SC SSD	P21082-001
HPE 960GB SATA MU SFF SC SSD	P21089-001
HPE 1.2TB SATA WI SFF SC SSD	805391-001
HPE 1.6TB SATA 6G WI SFF SC DS SSD	872516-001
HPE 1.6TB SATA 6G RI SFF SC DS SSD	869581-001
HPE1.92TB SATA MU SFF SC DS SSD	P09912-001
HPE 1.92TB SATA RI SFF RW DS SSD	P09849-001
HPE 1.92TB SATA MU SFF RW DS SSD	P09915-001
HPE 1.92TB SATA MU SFF SC DS SSD	P08625-001
HPE 1.92TB SATA RI SFF SC DS SSD	P08572-001
HPE 1.92TB SATA 6G RI SFF SC DS SSD	868930-001
HPE 1.92TB SATA MU SFF SC MV SSD	P18479-001
HPE 1.92TB SATA 6G MU SFF SC DS SSD	872522-001
HPE 1.92TB SATA RI SFF SC MV SSD	P18484-001
HPE 1.92TB SATA RI SFF SC SSD	P21083-001
HPE 1.92TB SATA MU SFF SC SSD	P21090-001
HPE 1.92TB SATA MU SFF RW SSD	P21096-001
HPE 3.84TB SATA 6G RI SFF SC DS SSD	868932-001
HPE 3.84TB SATA RI SFF RW DS SSD	P09850-001
HPE 3.84TB SATA MU SFF SC DS SSD	P08632-001

Description	Spare part number
HPE 3.84TB SATA RI SFF SC DS SSD	P08575-001
HPE 3.84TB SATA MU SFF SC MV SSD	P18480-001
HPE 3.84TB SATA RI SFF SC MV SSD	P18485-001
HPE 3.84TB SATA RI SFF SC SSD	P21084-001
HPE 3.84TB SATA MU SFF SC DS SS	P22588-001
HPE 3.84TB SATA MU SFF SC SSD	P21091-001
HPE 7.68TB SATA RI SFF SC MV SSD	P18486-001
HPE 7.68TB SATA RI SFF SC SSD	P21085-001

Fan spare parts

Customer self repair: **mandatory**

Description	Spare part number
Standard fan	875075-001
High-performance fan [1]	875076-001

[1] Required for Scalable Persistent Memory

Backplane board spare parts

Customer self repair: **optional**

Description	Spare part number
8-SFF SAS backplane, 12 Gbs	878543-001
8-SFF 6 SAS/2 NVMe hard drive backplane	874933-001
2-SFF SAS rear backplane	875064-001
2-SFF SAS/SATA backplane	775401-001
2 SFF NVMe backplane	875080-001
3-LFF SAS rear backplane	875081-001
4-LFF SAS backplane	875082-001
8-SFF NVMe backplane	872971-001

Chassis Intrusion Detection Switch spare part

Customer self repair: **mandatory**

Description	Spare part number
Chassis Intrusion Detection Switch	878412-001

Rear serial port interface spare part

Customer self repair: **mandatory**

Description	Spare part number
Rear serial port interface	875571-001

Accelerator and GPU options spare parts

Customer self repair: **optional**

Description	Spare part number
NVIDIA Quadro P4000 GPU	871970-001
HPE NVIDIA Quadro P2000 GPU	871969-001
HPE NVIDIA Quadro P2200 GPU Module	P16021-001
HPE NVIDIA Quadro P6000 24GB GPU	871968-001
HPE NVIDIA Tesla M10 Quad GPU Module	870046-001
HPE NVIDIA Tesla P4 8GB Module	872321-001
HPE NVIDIA Tesla P40 24GB Module	872323-001
HPE NVIDIA Tesla P100 12GB Module	877646-001
HPE NVIDIA Tesla T4 16GB Module	P09571-001
HPE NVIDIA Tesla V100 PCIe 16GB Module	876908-001
HPE NVIDIA Tesla V100S PCIe 32GB Module	P24827-001
HPE NVIDIA RTX 6000 GPU	P11377-001
HPE Graphics P100 PCIe 16GB Module	868585-001
HPE Intel Arria 10 FPGA Accelerator	P02425-001
Xilinx Alveo U50 Accelerator Card	P24826-001
Xilinx Alveo U250 Accelerator Card	P24825-001

12Gb SAS Expander Card spare part

Customer self repair: **optional**

Description	Spare part number
12Gb SAS Expander Card spare part	876907-001

Energy pack spare parts

HPE Smart Storage Hybrid Capacitor spare part

Customer self repair: **mandatory**

Description	Spare part number
HPE Smart Storage Hybrid Capacitor, 145mm cable	P07473-001

HPE Smart Storage Battery spare part

Customer self repair: **mandatory**

Description	Spare part number
HPE Smart Storage Battery	878643-001

Power module spare parts

Customer self repair: **mandatory**

Description	Spare part number
Power module without SID	875077-001
Power/SID module	875063-001
LFF power/optical drive module	875079-001

LFF front I/O board spare part

Customer self repair: **optional**

Description	Spare part number
LFF front I/O board	875088-001

HPE Trusted Platform Module 2.0 spare part

Customer self repair: **no**

Description	Spare part number
HPE Trusted Platform Module 2.0 Gen 10 kit, TAA	872159-001

Pensando Distributed Services Platform card spare parts

Customer self repair: **optional**

Description	Spare part number
Pensando DSP DSC-25 2p SFP28 card	P27682-001
Pensando DSP iLO Sideband ALOM Module	P27683-001

HPE NS204i-p NVMe OS Boot Device spare parts

Customer self repair: **mandatory**

Description	Spare part number
HPE NS204i-p NVMe OS Boot Device	P14379-001
480 GB NVMe x4 RI M.2 22110 DS SSD	P24886-001

Cable spare parts

Customer self repair: **mandatory**

Description	Spare part number
2 SFF Mini-SAS cable	784625-001
P824i-p cable kit	P03215-001
8 SFF Mini-SAS cable kit	784621-001
SFF Mini-SAS cable kit	875089-001
LFF Mini-SAS cable kit	875090-001
4P Slim SAS NVMe primary riser cable, box 3 cable kit	875091-001
Slim SAS NVMe direct attach cables kit	875092-001
HPE Smart Array type-a controller to 12G SAS expander cable kit	875093-001
Expander Host Controller Cable Set	784629-001
MIni-SAS to 12G SAS expander cable kit	875094-001
Data cables kit	875095-001
DVD SATA cable	784623-001
Power cables kit	875096-001
Controller backup power cable (short)	878645-001
Controller backup power cable (long)	878646-001
GPU cables kit	875097-001

Customer self repair

Hewlett Packard Enterprise products are designed with many Customer Self Repair (CSR) parts to minimize repair time and allow for greater flexibility in performing defective parts replacement. If during the diagnosis period Hewlett Packard Enterprise (or Hewlett Packard Enterprise service providers or service partners) identifies that the repair can be accomplished by the use of a CSR part, Hewlett Packard Enterprise will ship that part directly to you for replacement. There are two categories of CSR parts:

- **Mandatory**—Parts for which customer self repair is mandatory. If you request Hewlett Packard Enterprise to replace these parts, you will be charged for the travel and labor costs of this service.
- **Optional**—Parts for which customer self repair is optional. These parts are also designed for customer self repair. If, however, you require that Hewlett Packard Enterprise replace them for you, there may or may not be additional charges, depending on the type of warranty service designated for your product.

NOTE: Some Hewlett Packard Enterprise parts are not designed for customer self repair. In order to satisfy the customer warranty, Hewlett Packard Enterprise requires that an authorized service provider replace the part. These parts are identified as "No" in the Illustrated Parts Catalog.

Based on availability and where geography permits, CSR parts will be shipped for next business day delivery. Same day or four-hour delivery may be offered at an additional charge where geography permits. If assistance is required, you can call the Hewlett Packard Enterprise Support Center and a technician will help you over the telephone. Hewlett Packard Enterprise specifies in the materials shipped with a replacement CSR part whether a defective part must be returned to Hewlett Packard Enterprise. In cases where it is required to return the defective part to Hewlett Packard Enterprise, you must ship the defective part back to Hewlett Packard Enterprise within a defined period of time, normally five (5) business days. The defective part must be returned with the associated documentation in the provided shipping material. Failure to return the defective part may result in Hewlett Packard Enterprise billing you for the replacement. With a customer self repair, Hewlett Packard Enterprise will pay all shipping and part return costs and determine the courier/carrier to be used.

For more information about the Hewlett Packard Enterprise CSR program, contact your local service provider.

Parts only warranty service

Your Hewlett Packard Enterprise Limited Warranty may include a parts only warranty service. Under the terms of parts only warranty service, Hewlett Packard Enterprise will provide replacement parts free of charge.

For parts only warranty service, CSR part replacement is mandatory. If you request Hewlett Packard Enterprise to replace these parts, you will be charged for the travel and labor costs of this service.

Réparation par le client (CSR)

Les produits Hewlett Packard Enterprise comportent de nombreuses pièces CSR (Customer Self Repair = réparation par le client) afin de minimiser les délais de réparation et faciliter le remplacement des pièces défectueuses. Si pendant la période de diagnostic, Hewlett Packard Enterprise (ou ses partenaires ou mainteneurs agréés) détermine que la réparation peut être effectuée à l'aide d'une pièce CSR, Hewlett Packard Enterprise vous l'envoie directement. Il existe deux catégories de pièces CSR :

- **Obligatoire**—Pièces pour lesquelles la réparation par le client est obligatoire. Si vous demandez à Hewlett Packard Enterprise de remplacer ces pièces, les coûts de déplacement et main d'œuvre du service vous seront facturés.
- **Facultatif**—Pièces pour lesquelles la réparation par le client est facultative. Ces pièces sont également conçues pour permettre au client d'effectuer lui-même la réparation. Toutefois, si vous demandez à Hewlett Packard Enterprise de remplacer ces pièces, l'intervention peut ou non vous être facturée, selon le type de garantie applicable à votre produit.

REMARQUE: Certaines pièces Hewlett Packard Enterprise ne sont pas conçues pour permettre au client d'effectuer lui-même la réparation. Pour que la garantie puisse s'appliquer, Hewlett Packard Enterprise exige que le remplacement de la pièce soit effectué par un Mainteneur Agréé. Ces pièces sont identifiées par la mention "Non" dans le Catalogue illustré.

Les pièces CSR sont livrées le jour ouvré suivant, dans la limite des stocks disponibles et selon votre situation géographique. Si votre situation géographique le permet et que vous demandez une livraison le jour même ou dans les 4 heures, celle-ci vous sera facturée. Pour toute assistance, appelez le Centre d'assistance Hewlett Packard Enterprise pour qu'un technicien vous aide au téléphone Dans les documents envoyés avec la pièce de rechange CSR, Hewlett Packard Enterprise précise s'il est nécessaire de lui retourner la pièce défectueuse. Si c'est le cas, vous devez le faire dans le délai indiqué, généralement cinq (5) jours ouvrés. La pièce et sa documentation doivent être retournées dans l'emballage fourni. Si vous ne retournez pas la pièce défectueuse, Hewlett Packard Enterprise se réserve le droit de vous facturer les coûts de remplacement. Dans le cas d'une pièce CSR, Hewlett Packard Enterprise supporte l'ensemble des frais d'expédition et de retour, et détermine la société de courses ou le transporteur à utiliser.

Pour plus d'informations sur le programme CSR de Hewlett Packard Enterprise, contactez votre Mainteneur Agrée local.

Service de garantie "pièces seules"

Votre garantie limitée Hewlett Packard Enterprise peut inclure un service de garantie "pièces seules". Dans ce cas, les pièces de rechange fournies par Hewlett Packard Enterprise ne sont pas facturées.

Dans le cadre de ce service, la réparation des pièces CSR par le client est obligatoire. Si vous demandez à Hewlett Packard Enterprise de

remplacer ces pièces, les coûts de déplacement et main d'œuvre du service vous seront facturés.

Riparazione da parte del cliente

Per abbreviare i tempi di riparazione e garantire una maggiore flessibilità nella sostituzione di parti difettose, i prodotti Hewlett Packard Enterprise sono realizzati con numerosi componenti che possono essere riparati direttamente dal cliente (CSR, Customer Self Repair). Se in fase di diagnostica Hewlett Packard Enterprise (o un centro di servizi o di assistenza Hewlett Packard Enterprise) identifica il guasto come riparabile mediante un ricambio CSR, Hewlett Packard Enterprise lo spedirà direttamente al cliente per la sostituzione. Vi sono due categorie di parti CSR:

- **Obbligatorie**—Parti che devono essere necessariamente riparate dal cliente. Se il cliente ne affida la riparazione ad Hewlett Packard Enterprise, deve sostenere le spese di spedizione e di manodopera per il servizio.
- **Opzionali**—Parti la cui riparazione da parte del cliente è facoltativa. Si tratta comunque di componenti progettati per questo scopo. Se tuttavia il cliente ne richiede la sostituzione ad Hewlett Packard Enterprise, potrebbe dover sostenere spese addizionali a seconda del tipo di garanzia previsto per il prodotto.

NOTA: alcuni componenti Hewlett Packard Enterprise non sono progettati per la riparazione da parte del cliente. Per rispettare la garanzia, Hewlett Packard Enterprise richiede che queste parti siano sostituite da un centro di assistenza autorizzato. Tali parti sono identificate da un "No" nel Catalogo illustrato dei componenti.

In base alla disponibilità e alla località geografica, le parti CSR vengono spedite con consegna entro il giorno lavorativo seguente. La consegna nel giorno stesso o entro quattro ore è offerta con un supplemento di costo solo in alcune zone. In caso di necessità si può richiedere l'assistenza telefonica di un addetto del centro di supporto tecnico Hewlett Packard Enterprise. Nel materiale fornito con una parte di ricambio CSR, Hewlett Packard Enterprise specifica se il cliente deve restituire dei component. Qualora sia richiesta la resa ad Hewlett Packard Enterprise del componente difettoso, lo si deve spedire ad Hewlett Packard Enterprise entro un determinato periodo di tempo, generalmente cinque (5) giorni lavorativi. Il componente difettoso deve essere restituito con la documentazione associata nell'imballo di spedizione fornito. La mancata restituzione del componente può comportare la fatturazione del ricambio da parte di Hewlett Packard Enterprise. Nel caso di riparazione da parte del cliente, Hewlett Packard Enterprise sostiene tutte le spese di spedizione e resa e sceglie il corriere/vettore da utilizzare.

Per ulteriori informazioni sul programma CSR di Hewlett Packard Enterprise, contattare il centro di assistenza di zona.

Servizio di garanzia per i soli componenti

La garanzia limitata Hewlett Packard Enterprise può includere un servizio di garanzia per i soli componenti. Nei termini di garanzia del servizio per i soli componenti, Hewlett Packard Enterprise fornirà gratuitamente le parti di ricambio.

Per il servizio di garanzia per i soli componenti è obbligatoria la formula CSR che prevede la riparazione da parte del cliente. Se il cliente invece richiede la sostituzione ad Hewlett Packard Enterprise dovrà sostenere le spese di spedizione e di manodopera per il servizio.

Customer Self Repair

Hewlett Packard Enterprise Produkte enthalten viele CSR-Teile (Customer Self Repair), um Reparaturzeiten zu minimieren und höhere Flexibilität beim Austausch defekter Bauteile zu ermöglichen. Wenn Hewlett Packard Enterprise (oder ein Hewlett Packard Enterprise Servicepartner) bei der Diagnose feststellt, dass das Produkt mithilfe eines CSR-Teils repariert werden kann, sendet Ihnen Hewlett Packard Enterprise dieses Bauteil zum Austausch direkt zu. CSR-Teile werden in zwei Kategorien unterteilt:

- **Zwingend**—Teile, für die das Customer Self Repair-Verfahren zwingend vorgegeben ist. Wenn Sie den Austausch dieser Teile von Hewlett Packard Enterprise vornehmen lassen, werden Ihnen die Anfahrt- und Arbeitskosten für diesen Service berechnet.
- **Optional**—Teile, für die das Customer Self Repair-Verfahren optional ist. Diese Teile sind auch für Customer Self Repair ausgelegt. Wenn Sie jedoch den Austausch dieser Teile von Hewlett Packard Enterprise vornehmen lassen möchten, können bei diesem Service je nach den für Ihr Produkt vorgesehenen Garantiebedingungen zusätzliche Kosten anfallen.

HINWEIS: Einige Hewlett Packard Enterprise Teile sind nicht für Customer Self Repair ausgelegt. Um den Garantieanspruch des Kunden zu erfüllen, muss das Teil von einem Hewlett Packard Enterprise Servicepartner ersetzt werden. Im illustrierten Teilekatalog sind diese Teile mit „No“ bzw. „Nein“ gekennzeichnet.

CSR-Teile werden abhängig von der Verfügbarkeit und vom Lieferziel am folgenden Geschäftstag geliefert. Für bestimmte Standorte ist eine Lieferung am selben Tag oder innerhalb von vier Stunden gegen einen Aufpreis verfügbar. Wenn Sie Hilfe benötigen, können Sie das Hewlett Packard Enterprise Support Center anrufen und sich von einem Mitarbeiter per Telefon helfen lassen. Den Materialien von Hewlett Packard Enterprise, die mit einem CSR-Ersatzteil geliefert werden, können Sie entnehmen, ob das defekte Teil an Hewlett Packard Enterprise zurückgeschickt werden muss. Wenn es erforderlich ist, das defekte Teil an Hewlett Packard Enterprise zurückzuschicken, müssen Sie dies innerhalb eines vorgegebenen Zeitraums tun, in der Regel innerhalb von fünf (5) Geschäftstagen. Das defekte Teil muss mit der zugehörigen Dokumentation in der Verpackung zurückgeschickt werden, die im Lieferumfang enthalten ist. Wenn Sie das defekte Teil nicht zurückschicken, kann Hewlett Packard Enterprise Ihnen das Ersatzteil in Rechnung stellen. Im Falle von Customer Self Repair kommt Hewlett Packard Enterprise für alle Kosten für die Lieferung und Rücksendung auf und bestimmt den Kurier-/Frachtdienst.

Weitere Informationen über das Hewlett Packard Enterprise Customer Self Repair Programm erhalten Sie von Ihrem Servicepartner vor Ort.

Parts-only Warranty Service (Garantieservice ausschließlich für Teile)

Ihre Hewlett Packard Enterprise Garantie umfasst möglicherweise einen Parts-only Warranty Service (Garantieservice ausschließlich für Teile). Gemäß den Bestimmungen des Parts-only Warranty Service stellt Hewlett Packard Enterprise Ersatzteile kostenlos zur Verfügung.

Für den Parts-only Warranty Service ist das CSR-Verfahren zwingend vorgegeben. Wenn Sie den Austausch dieser Teile von Hewlett Packard Enterprise vornehmen lassen, werden Ihnen die Anfahrt- und Arbeitskosten für diesen Service berechnet.

Reparaciones del propio cliente

Los productos de Hewlett Packard Enterprise incluyen muchos componentes que el propio usuario puede reemplazar (Customer Self Repair, CSR) para minimizar el tiempo de reparación y ofrecer una mayor flexibilidad a la hora de realizar sustituciones de componentes defectuosos. Si, durante la fase de diagnóstico, Hewlett Packard Enterprise (o los proveedores o socios de servicio de Hewlett Packard Enterprise) identifica que una reparación puede llevarse a cabo mediante el uso de un componente CSR, Hewlett Packard Enterprise le enviará dicho componente directamente para que realice su sustitución. Los componentes CSR se clasifican en dos categorías:

- **Obligatorio**—Componentes cuya reparación por parte del usuario es obligatoria. Si solicita a Hewlett Packard Enterprise que realice la sustitución de estos componentes, tendrá que hacerse cargo de los gastos de desplazamiento y de mano de obra de dicho servicio.
- **Opcional**—Componentes cuya reparación por parte del usuario es opcional. Estos componentes también están diseñados para que puedan ser reparados por el usuario. Sin embargo, si precisa que Hewlett Packard Enterprise realice su sustitución, puede o no conllevar costes adicionales, dependiendo del tipo de servicio de garantía correspondiente al producto.

NOTA: Algunos componentes de Hewlett Packard Enterprise no están diseñados para que puedan ser reparados por el usuario. Para que el usuario haga valer su garantía, Hewlett Packard Enterprise pone como condición que un proveedor de servicios autorizado realice la sustitución de estos componentes. Dichos componentes se identifican con la palabra "No" en el catálogo ilustrado de componentes.

Según la disponibilidad y la situación geográfica, los componentes CSR se enviarán para que lleguen a su destino al siguiente día laborable. Si la situación geográfica lo permite, se puede solicitar la entrega en el mismo día o en cuatro horas con un coste adicional. Si precisa asistencia técnica, puede llamar al Centro de asistencia técnica de Hewlett Packard Enterprise y recibirá ayuda telefónica por parte de un técnico. Con el envío de materiales para la sustitución de componentes CSR, Hewlett Packard Enterprise especificará si los componentes defectuosos deberán devolverse a Hewlett Packard Enterprise. En aquellos casos en los que sea necesario devolver algún componente a Hewlett Packard Enterprise, deberá hacerlo en el periodo de tiempo especificado, normalmente cinco días laborables. Los componentes defectuosos deberán devolverse con toda la documentación relacionada y con el embalaje de envío. Si no enviara el componente defectuoso requerido, Hewlett Packard Enterprise podrá cobrarle por el de sustitución. En el caso de todas sustituciones que lleve a cabo el cliente, Hewlett Packard Enterprise se hará cargo de todos los gastos de envío y devolución de componentes y escogerá la empresa de transporte que se utilice para dicho servicio.

Para obtener más información acerca del programa de Reparaciones del propio cliente de Hewlett Packard Enterprise, póngase en contacto con su proveedor de servicios local.

Servicio de garantía exclusivo de componentes

La garantía limitada de Hewlett Packard Enterprise puede que incluya un servicio de garantía exclusivo de componentes. Según las condiciones de este servicio exclusivo de componentes, Hewlett Packard Enterprise le facilitará los componentes de repuesto sin cargo adicional alguno.

Para este servicio de garantía exclusivo de componentes, es obligatoria la sustitución de componentes por parte del usuario (CSR). Si solicita a Hewlett Packard Enterprise que realice la sustitución de estos componentes, tendrá que hacerse cargo de los gastos de desplazamiento y de mano de obra de dicho servicio.

Customer Self Repair

Veel onderdelen in Hewlett Packard Enterprise producten zijn door de klant zelf te repareren, waardoor de reparatieduur tot een minimum beperkt kan blijven en de flexibiliteit in het vervangen van defecte onderdelen groter is. Deze onderdelen worden CSR-onderdelen (Customer Self Repair) genoemd. Als Hewlett Packard Enterprise (of een Hewlett Packard Enterprise Service Partner) bij de diagnose vaststelt dat de reparatie kan worden uitgevoerd met een CSR-onderdeel, verzendt Hewlett Packard Enterprise dat onderdeel rechtstreeks naar u, zodat u het defecte onderdeel daarmee kunt vervangen. Er zijn twee categorieën CSR-onderdelen:

- **Verplicht**—Onderdelen waarvoor reparatie door de klant verplicht is. Als u Hewlett Packard Enterprise verzoekt deze onderdelen voor u te vervangen, worden u voor deze service reiskosten en arbeidsloon in rekening gebracht.
- **Optioneel**—Onderdelen waarvoor reparatie door de klant optioneel is. Ook deze onderdelen zijn ontworpen voor reparatie door de klant. Als u echter Hewlett Packard Enterprise verzoekt deze onderdelen voor u te vervangen, kunnen daarvoor extra kosten in rekening worden gebracht, afhankelijk van het type garantieservice voor het product.

OPMERKING: Sommige Hewlett Packard Enterprise onderdelen zijn niet ontwikkeld voor reparatie door de klant. In verband met de garantievoorwaarden moet het onderdeel door een geautoriseerde Service Partner worden vervangen. Deze onderdelen worden in de geïllustreerde onderdelencatalogus aangemerkt met "Nee".

Afhankelijk van de leverbaarheid en de locatie worden CSR-onderdelen verzonden voor levering op de eerstvolgende werkdag. Levering op dezelfde dag of binnen vier uur kan tegen meerkosten worden aangeboden, indien dit mogelijk is gezien de locatie. Indien assistentie is gewenst, belt u het Hewlett Packard Enterprise Support Center om via de telefoon ondersteuning van een technicus te ontvangen. Hewlett Packard Enterprise vermeldt in de documentatie bij het vervangende CSR-onderdeel of het defecte onderdeel aan Hewlett

Packard Enterprise moet worden geretourneerd. Als het defecte onderdeel aan Hewlett Packard Enterprise moet worden teruggezonden, moet u het defecte onderdeel binnen een bepaalde periode, gewoonlijk vijf (5) werkdagen, retourneren aan Hewlett Packard Enterprise. Het defecte onderdeel moet met de bijbehorende documentatie worden geretourneerd in het meegeleverde verpakkingsmateriaal. Als u het defecte onderdeel niet terugzendt, kan Hewlett Packard Enterprise u voor het vervangende onderdeel kosten in rekening brengen. Bij reparatie door de klant betaalt Hewlett Packard Enterprise alle verzendkosten voor het vervangende en geretourneerde onderdeel en kiest Hewlett Packard Enterprise zelf welke koerier/transportonderneming hiervoor wordt gebruikt.

Neem contact op met een Service Partner voor meer informatie over het Customer Self Repair programma van Hewlett Packard Enterprise.

Garantieservice "Parts Only"

Het is mogelijk dat de Hewlett Packard Enterprise garantie alleen de garantieservice "Parts Only" omvat. Volgens de bepalingen van de Parts Only garantieservice zal Hewlett Packard Enterprise kosteloos vervangende onderdelen ter beschikking stellen.

Voor de Parts Only garantieservice is vervanging door CSR-onderdelen verplicht. Als u Hewlett Packard Enterprise verzoekt deze onderdelen voor u te vervangen, worden u voor deze service reiskosten en arbeidsloon in rekening gebracht

Reparo feito pelo cliente

Os produtos da Hewlett Packard Enterprise são projetados com muitas peças para reparo feito pelo cliente (CSR) de modo a minimizar o tempo de reparo e permitir maior flexibilidade na substituição de peças com defeito. Se, durante o período de diagnóstico, a Hewlett Packard Enterprise (ou fornecedores/parceiros da Hewlett Packard Enterprise) concluir que o reparo pode ser efetuado pelo uso de uma peça CSR, a Hewlett Packard Enterprise enviará a peça diretamente ao cliente. Há duas categorias de peças CSR:

- **Obrigatória**—Peças cujo reparo feito pelo cliente é obrigatório. Se desejar que a Hewlett Packard Enterprise substitua essas peças, serão cobradas as despesas de transporte e mão-de-obra do serviço.
- **Opcional**—Peças cujo reparo feito pelo cliente é opcional. Essas peças também são projetadas para o reparo feito pelo cliente. No entanto, se desejar que a Hewlett Packard Enterprise as substitua, pode haver ou não a cobrança de taxa adicional, dependendo do tipo de serviço de garantia destinado ao produto.

OBSERVAÇÃO: Algumas peças da Hewlett Packard Enterprise não são projetadas para o reparo feito pelo cliente. A fim de cumprir a garantia do cliente, a Hewlett Packard Enterprise exige que um técnico autorizado substitua a peça. Essas peças estão identificadas com a marca "No" (Não), no catálogo de peças ilustrado.

Conforme a disponibilidade e o local geográfico, as peças CSR serão enviadas no primeiro dia útil após o pedido. Onde as condições geográficas permitirem, a entrega no mesmo dia ou em quatro horas pode ser feita mediante uma taxa adicional. Se precisar de auxílio, entre em contato com o Centro de suporte técnico da Hewlett Packard Enterprise para que um técnico o ajude por telefone. A Hewlett Packard Enterprise especifica nos materiais fornecidos com a peça CSR de reposição se a peça com defeito deve ser devolvida à Hewlett Packard Enterprise. Nos casos em que isso for necessário, é preciso enviar a peça com defeito à Hewlett Packard Enterprise, você deverá enviar a peça com defeito de volta para a Hewlett Packard Enterprise dentro do período de tempo definido, normalmente em 5 (cinco) dias úteis. A peça com defeito deve ser enviada com a documentação correspondente no material de transporte fornecido. Caso não o faça, a Hewlett Packard Enterprise poderá cobrar a reposição. Para as peças de reparo feito pelo cliente, a Hewlett Packard Enterprise paga todas as despesas de transporte e de devolução da peça e determina a transportadora/serviço postal a ser utilizado.

Para obter mais informações sobre o programa de reparo feito pelo cliente da Hewlett Packard Enterprise, entre em contato com o fornecedor de serviços local.

Serviço de garantia apenas para peças

A garantia limitada da Hewlett Packard Enterprise pode incluir um serviço de garantia apenas para peças. Segundo os termos do serviço de garantia apenas para peças, a Hewlett Packard Enterprise fornece as peças de reposição sem cobrar nenhuma taxa.

No caso desse serviço, a substituição de peças CSR é obrigatória. Se desejar que a Hewlett Packard Enterprise substitua essas peças, serão cobradas as despesas de transporte e mão-de-obra do serviço.

カスタマーセルフリペア

修理時間を短縮し、故障部品の交換における高い柔軟性を確保するために、Hewlett Packard Enterprise製品には多数のカスタマーセルフリペア（CSR）部品があります。診断の際に、CSR部品を使用すれば修理ができるとHewlett Packard Enterprise（Hewlett Packard EnterpriseまたはHewlett Packard Enterprise正規保守代理店）が判断した場合、Hewlett Packard Enterpriseはその部品を直接、お客様に発送し、お客様に交換していただきます。CSR部品には以下の2種類があります。

- **必須** - カスタマーセルフリペアが必須の部品。当該部品について、もしもお客様がHewlett Packard Enterpriseに交換作業を依頼される場合には、その修理サービスに関する交通費および人件費がお客様に請求されます。
- **任意** - カスタマーセルフリペアが任意である部品。この部品もカスタマーセルフリペア用です。当該部品について、もしもお客様がHewlett Packard Enterpriseに交換作業を依頼される場合には、お買い上げの製品に適用される保証サービス内容の範囲内においては、別途費用を負担していただくことなく保証サービスを受けることができます。

注：Hewlett Packard Enterprise製品の一部の部品は、カスタマーセルフリペアの対象外です。製品の保証を継続するためには、Hewlett Packard EnterpriseまたはHewlett Packard Enterprise正規保守代理店による交換作業が必須となります。部品カタログには、当該部品がカスタマーセルフリペア除外品である旨が記載されています。

部品供給が可能な場合、地域によっては、CSR部品を翌営業日に届くように発送します。また、地域によっては、追加費用を負担いただくことにより同日または4時間以内に届くように発送することも可能な場合があります。サポートが必要なときは、Hewlett Packard Enterpriseサポートセンターに電話していただければ、技術者が電話でアドバイスします。交換用のCSR部品または同梱物には、故障部品をHewlett Packard Enterpriseに返送する必要があるかどうかが表示されています。故障部品をHewlett Packard Enterpriseに返送する必要がある場合は、指定期限内（通常は5営業日以内）に故障部品をHewlett Packard Enterpriseに返送してください。故障部品を返送する場合は、届いた時の梱包箱に関連書類とともに入れてください。故障部品を返送しない場合、Hewlett Packard Enterpriseから部品費用が請求されます。カスタマーセルフリペアの際には、Hewlett Packard Enterpriseは送料および部品返送費を全額負担し、使用する宅配便会社や運送会社を指定します。

部品のみ保証サービス

Hewlett Packard Enterprise保証サービスには、部品のみ保証サービスが適用される場合があります。このサービスでは、交換部品は無償で提供されます。

部品のみ保証サービスにおいては、CSR部品をお客様により交換作業していただくことが必須になります。当該部品について、もしもお客様がHewlett Packard Enterpriseに交換作業を依頼される場合には、その修理サービスに関する交通費および人件費がお客様のご負担となります。

客户自行维修

Hewlett Packard Enterprise 产品提供许多客户自行维修 (CSR) 部件，以尽可能缩短维修时间和在更换缺陷部件方面提供更大的灵活性。如果在诊断期间 Hewlett Packard Enterprise（或Hewlett Packard Enterprise 服务提供商或服务合作伙伴）确定可以通过使用 CSR 部件完成维修，Hewlett Packard Enterprise 将直接把该部件发送给您进行更换。有两类 CSR 部件：

- **强制性的** — 要求客户必须自行维修的部件。如果您请求 Hewlett Packard Enterprise 更换这些部件，则必须为该服务支付差旅费和人工费用。
- **可选的** — 客户可以选择是否自行维修的部件。这些部件也是为客户自行维修设计的。不过，如果您要求 Hewlett Packard Enterprise 为您更换这些部件，则根据为您的产品指定的保修服务类型，Hewlett Packard Enterprise 可能收取或不再收取任何附加费用。

注：某些 Hewlett Packard Enterprise 部件的设计并未考虑客户自行维修。为了满足客户保修的需要，Hewlett Packard Enterprise 要求授权服务提供商更换相关部件。这些部件在部件图解目录中标记为“否”。

CSR 部件将在下一个工作日发运（取决于备货情况和允许的地理范围）。在允许的地理范围内，可在当天或四小时内发运，但要收取额外费用。如果需要帮助，您可以致电 Hewlett Packard Enterprise 技术支持中心，将会有技术人员通过电话为您提供帮助。Hewlett Packard Enterprise 会在随更换的 CSR 部件发运的材料中指明是否必须将有缺陷的部件返还给 Hewlett Packard Enterprise。如果要求您将有缺陷的部件返还给 Hewlett Packard Enterprise，那么您必须在规定的期限内（通常是五 (5) 个工作日）将缺陷部件发给 Hewlett Packard Enterprise。有缺陷的部件必须随所提供的发运材料中的相关文件一起返还。如果未能送还有缺陷的部件，Hewlett Packard Enterprise 可能会要求您支付更换费用。客户自行维修时，Hewlett Packard Enterprise 将承担所有相关运输和部件返回费用，并指定快递商/承运商。

有关 Hewlett Packard Enterprise 客户自行维修计划的详细信息，请与您当地的服务提供商联系。

仅部件保修服务

您的 Hewlett Packard Enterprise 有限保修服务可能涉及仅部件保修服务。根据仅部件保修服务条款的规定，Hewlett Packard Enterprise 将免费提供更换的部件。

仅部件保修服务要求进行 CSR 部件更换。如果您请求 Hewlett Packard Enterprise 更换这些部件，则必须为该服务支付差旅费和人工费用。

客戶自行維修

Hewlett Packard Enterprise 產品設計了許多「客戶自行維修」(CSR) 的零件以減少維修時間，並且使得更換瑕疵零件時能有更大的彈性。如果在診斷期間，Hewlett Packard Enterprise (或 Hewlett Packard Enterprise 服務供應商或維修夥伴) 辨認出此項維修工作可以藉由使用 CSR 零件來完成，則 Hewlett Packard Enterprise 將直接寄送該零件給您作更換。CSR 零件分為兩種類別：

- **強制的** — 客戶自行維修所使用的零件是強制性的。如果您要求 Hewlett Packard Enterprise 更換這些零件，Hewlett Packard Enterprise 將會向您收取此服務所需的外出費用與勞動成本。
- **選購的** — 客戶自行維修所使用的零件是選購的。這些零件也設計用於客戶自行維修之用。不過，如果您要求 Hewlett Packard Enterprise 為您更換，則可能需要也可能不需要負擔額外的費用，端視針對此產品指定的保固服務類型而定。

備註：某些 Hewlett Packard Enterprise 零件沒有消費者可自行維修的設計。為符合客戶保固，Hewlett Packard Enterprise 需要授權的服務供應商更換零件。這些零件在圖示的零件目錄中，被標示為「否」。

基於材料取得及環境允許的情況下，CSR 零件將於下一個工作日以快遞寄送。在環境的允許下當天或四小時內送達，則可能需要額外的費用。若您需要協助，可致電 Hewlett Packard Enterprise 支援中心，會有一位技術人員透過電話來協助您。不論損壞的零件是否必須退回，Hewlett Packard Enterprise 皆會在與 CSR 替換零件一起運送的材料中註明。若要將損壞的零件退回 Hewlett Packard Enterprise，您必須在指定的一段時間內 (通常為五 (5) 個工作天)，將損壞的零件寄回 Hewlett Packard Enterprise。損壞的零件必須與寄送資料中隨附的相關技術文件一併退還。如果無法退還損壞的零件，Hewlett Packard Enterprise 可能要向您收取替換費用。針對客戶自行維修情形，Hewlett Packard Enterprise 將負責所有運費及零件退還費用，並指定使用何家快遞/貨運公司。

如需 Hewlett Packard Enterprise 的 CSR 方案詳細資訊，請連絡您當地的服務供應商。

僅限零件的保固服務

您的「Hewlett Packard Enterprise 有限保固」可能包含僅限零件的保固服務。在僅限零件的保固服務情況下，Hewlett Packard Enterprise 將免費提供替換零件。

針對僅限零件的保固服務，CSR 零件替換是強制性的。如果您要求 Hewlett Packard Enterprise 更換這些零件，Hewlett Packard Enterprise 將會向您收取此服務所需的外出費用與勞動成本。

고객 셀프 수리

Hewlett Packard Enterprise 제품은 수리 시간을 최소화하고 결함이 있는 부품 교체 시 더욱 융통성을 발휘할 수 있도록 하기 위해 고객 셀프 수리(CSR) 부품을 다량 사용하여 설계되었습니다. 진단 기간 동안 Hewlett Packard Enterprise(또는 Hewlett Packard Enterprise 서비스 공급업체 또는 서비스 협력업체)에서 CSR 부품을 사용하여 수리가 가능하다고 판단되면 Hewlett Packard Enterprise는 해당 부품을 바로 사용자에게 보내어 사용자가 교체할 수 있도록 합니다. CSR 부품에는 두 가지 종류가 있습니다.

- **필수** - 고객 셀프 수리가 의무 사항인 필수 부품. 사용자가 Hewlett Packard Enterprise에 이 부품의 교체를 요청할 경우 이 서비스에 대한 출장비 및 작업비가 청구됩니다.
- **선택 사항** - 고객 셀프 수리가 선택 사항인 부품. 이 부품들도 고객 셀프 수리가 가능하도록 설계되었습니다. 하지만 사용자가 Hewlett Packard Enterprise에 이 부품의 교체를 요청할 경우 사용자가 구입한 제품에 해당하는 보증 서비스 유형에 따라 추가 비용 없이 교체가 가능할 수 있습니다.

참고: 일부 Hewlett Packard Enterprise 부품은 고객 셀프 수리가 불가능하도록 설계되었습니다. Hewlett Packard Enterprise는 만족스러운 고객 보증을 위해 공인 서비스 제공업체를 통해 부품을 교체하도록 하고 있습니다. 이러한 부품들은 Illustrated Parts Catalog에 "No"라고 표시되어 있습니다.

CSR 부품은 재고 상태와 지리적 조건이 허용하는 경우 다음 영업일 납품이 가능하도록 배송이 이루어집니다. 지리적 조건이 허용하는 경우 추가 비용이 청구되는 조건으로 당일 또는 4시간 배송이 가능할 수도 있습니다. 도움이 필요하시면 Hewlett Packard Enterprise Support Center로 전화하십시오. 전문 기술자가 전화로 도움을 줄 것입니다. Hewlett Packard Enterprise는 결함이 발생한 부품을 Hewlett Packard Enterprise로 반환해야 하는지 여부를 CSR 교체 부품과 함께 배송된 자료에 지정합니다. 결함이 발생한 부품을 Hewlett Packard Enterprise로 반환해야 하는 경우에는 지정된 기간 내(통상 영업일 기준 5일)에 Hewlett Packard Enterprise로 반환해야 합니다. 이때 결함이 발생한 부품은 제공된 포장 재료에 넣어 관련 설명서와 함께 반환해야 합니다. 결함이 발생한 부품을 반환하지 않는 경우 Hewlett Packard Enterprise가 교체 부품에 대해 비용을 청구할 수 있습니다. 고객 셀프 수리의 경우, Hewlett Packard Enterprise는 모든 운송 및 부품 반환 비용을 부담하며 이용할 운송업체 및 택배 서비스를 결정합니다.

Hewlett Packard Enterprise CSR 프로그램에 대한 자세한 내용은 가까운 서비스 제공업체에 문의하십시오.

부품 제공 보증 서비스

Hewlett Packard Enterprise 제한 보증에는 부품 제공 보증 서비스가 포함될 수 있습니다. 이러한 경우 Hewlett Packard Enterprise는 부품 제공 보증 서비스의 조건에 따라 교체 부품만을 무료로 제공합니다.

부품 제공 보증 서비스 제공 시 CSR 부품 교체는 의무 사항입니다. 사용자가 Hewlett Packard Enterprise에 이 부품의 교체를 요청할 경우 이 서비스에 대한 출장비 및 작업비가 청구됩니다.

Required tools

You need the following items for some procedures:

- T-10 Torx screwdriver
- T-15 Torx screwdriver
- T-30 Torx screwdriver

Safety considerations

Before performing service procedures, review all the safety information.

Preventing electrostatic discharge

To prevent damaging the system, be aware of the precautions you must follow when setting up the system or handling parts. A discharge of static electricity from a finger or other conductor may damage system boards or other static-sensitive devices. This type of damage may reduce the life expectancy of the device.

Procedure

- Avoid hand contact by transporting and storing products in static-safe containers.
- Keep electrostatic-sensitive parts in their containers until they arrive at static-free workstations.
- Place parts on a grounded surface before removing them from their containers.
- Avoid touching pins, leads, or circuitry.
- Always be properly grounded when touching a static-sensitive component or assembly.

Symbols on equipment

The following symbols might be found on the equipment to indicate the presence of potentially hazardous conditions.

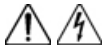

This symbol indicates the presence of hazardous energy circuits or electric shock hazards. Refer all servicing to qualified personnel.

WARNING: To reduce the risk of injury from electric shock hazards, do not open this enclosure. Refer all maintenance, upgrades, and servicing to qualified personnel.



This symbol indicates the presence of electric shock hazards. The area contains no user or field serviceable parts. Do not open for any reason.

WARNING: To reduce the risk of injury from electric shock hazards, do not open this enclosure.



This symbol on an RJ-45 receptacle indicates a network interface connection.

WARNING: To reduce the risk of electric shock, fire, or damage to the equipment, do not plug telephone or telecommunications connectors into this receptacle.



This symbol indicates the presence of a hot surface or hot component. If this surface is contacted, the potential for injury exists.

WARNING: To reduce the risk of injury from a hot component, allow the surface to cool before touching.



This symbol indicates that the component exceeds the recommended weight for one individual to handle safely.

WARNING: To reduce the risk of personal injury or damage to the equipment, observe local occupational health and safety requirements and guidelines for manual material handling.



These symbols, on power supplies or systems, indicate that the equipment is supplied by multiple sources of power.

WARNING: To reduce the risk of injury from electric shock, remove all power cords to disconnect power from the system completely.

Server warnings and cautions

Before installing a server, be sure that you understand the following warnings and cautions.

⚠ **WARNING:** To reduce the risk of electric shock, personal injury, and damage to the equipment:

- Do not attempt to service any parts of the equipment other than those specified in the following procedure. Any other activities may require that you shut down the server and remove the power cord.
- Installation and maintenance of this product must be performed by individuals who are knowledgeable about the procedures, precautions, and hazards associated with the product.

⚠ **WARNING:** To reduce the risk of personal injury from hot surfaces, allow the drives and the internal system components to cool before touching them.

⚠ **WARNING:**
To reduce the risk of fire or burns after removing the energy pack:

- Do not disassemble, crush, or puncture the energy pack.
- Do not short external contacts.
- Do not dispose of the energy pack in fire or water.

After power is disconnected, battery voltage might still be present for 1s to 160s.
AVERTISSEMENT: Pour réduire les risques d'incendie ou de brûlures après le retrait du module batterie :

- N'essayez pas de démonter, d'écraser ou de percer le module batterie.
- Ne court-circuitez pas ses contacts externes.
- Ne jetez pas le module batterie dans le feu ou dans l'eau.

Après avoir déconnecté l'alimentation, une tension peut subsister dans la batterie durant 1 à 160 secondes.

⚠ **CAUTION:** Do not operate the server for long periods with the access panel open or removed. Operating the server in this manner results in improper airflow and improper cooling that can lead to thermal damage.

Preparation procedures

Power down the server

Before powering down the server for any upgrade or maintenance procedures, perform a backup of critical server data and programs.

IMPORTANT:
When the server is in standby mode, auxiliary power is still being provided to the system.

To power down the server, use one of the following methods:

- Press and release the Power On/Standby button.
  This method initiates a controlled shutdown of applications and the OS before the server enters standby mode.
- Press and hold the Power On/Standby button for more than 4 seconds to force the server to enter standby mode.
  This method forces the server to enter standby mode without properly exiting applications and the OS. If an application stops responding, you can use this method to force a shutdown.
- Use a virtual power button selection through iLO.
  This method initiates a controlled remote shutdown of applications and the OS before the server enters standby mode.

Before proceeding, verify that the server is in standby mode by observing that the system power LED is amber.

Extend the server from the rack

> ⚠ **WARNING:** To reduce the risk of personal injury or equipment damage, be sure that the rack is adequately stabilized before extending a component from the rack.

1. Pull down the quick release levers on each side of the server.
2. Extend the server from the rack.

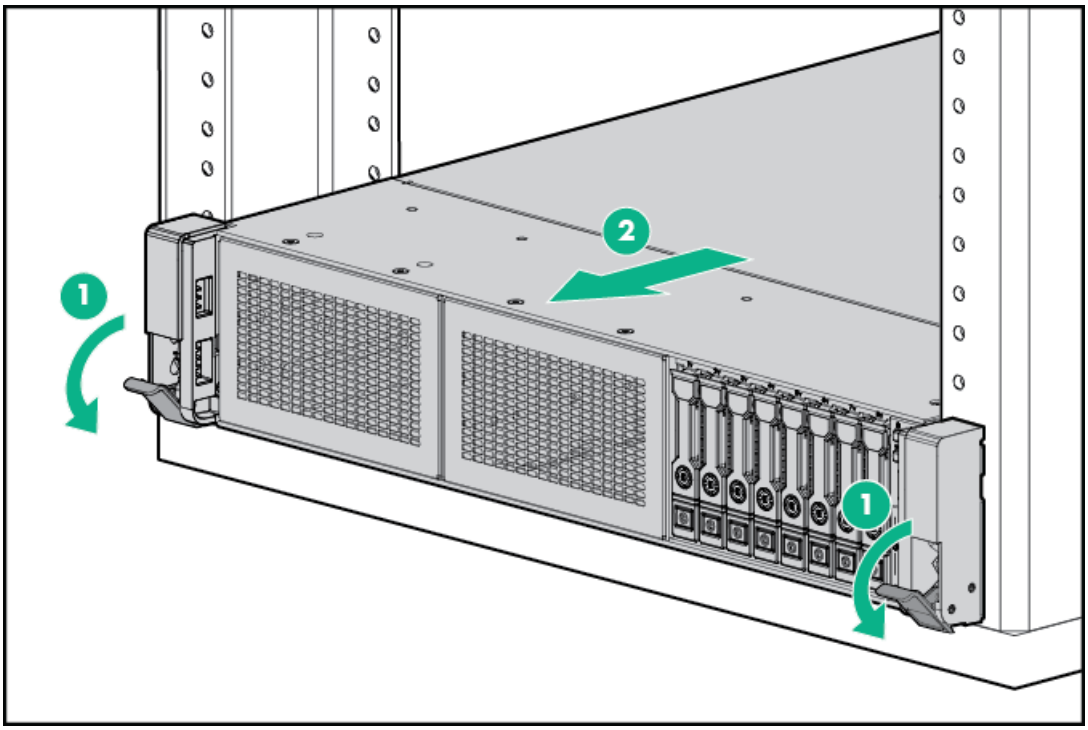

3. After performing the installation or maintenance procedure, slide the server back into the rack, and then press the server firmly into the rack to secure it in place.

> ⚠ **WARNING:** To reduce the risk of personal injury, be careful when pressing the server rail-release latches and sliding the server into the rack. The sliding rails could pinch your fingers.

Remove the server from the rack

To remove the server from a Hewlett Packard Enterprise, Compaq-branded, Telco, or third-party rack:

Procedure

1. Power down the server.
2. Extend the server from the rack.
3. Disconnect the cabling and remove the server from the rack. For more information, see the documentation that ships with the rack mounting option.
4. Place the server on a sturdy, level surface.

Access the product rear panel

Release the cable management arm

Release the cable management arm and then swing the arm away from the rack.

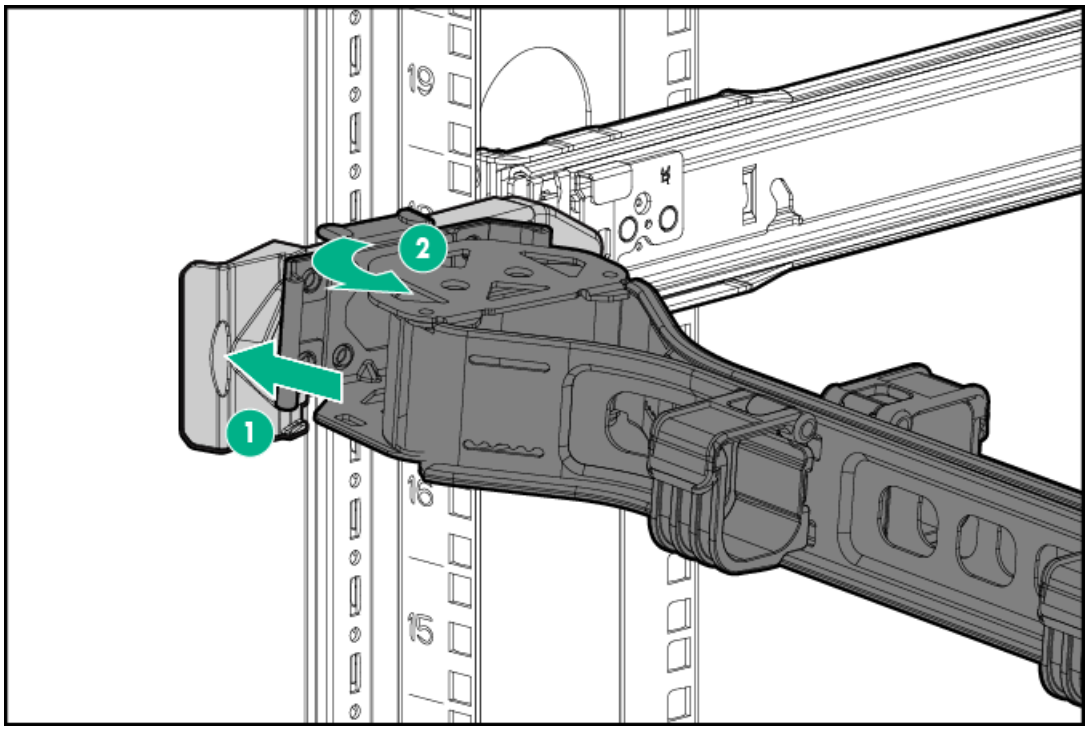

Accessing the Systems Insight Display

The Systems Insight Display is supported only on SFF models.

Procedure

1. Press and release the panel.
2. After the display fully ejects, rotate the display to view the LEDs.

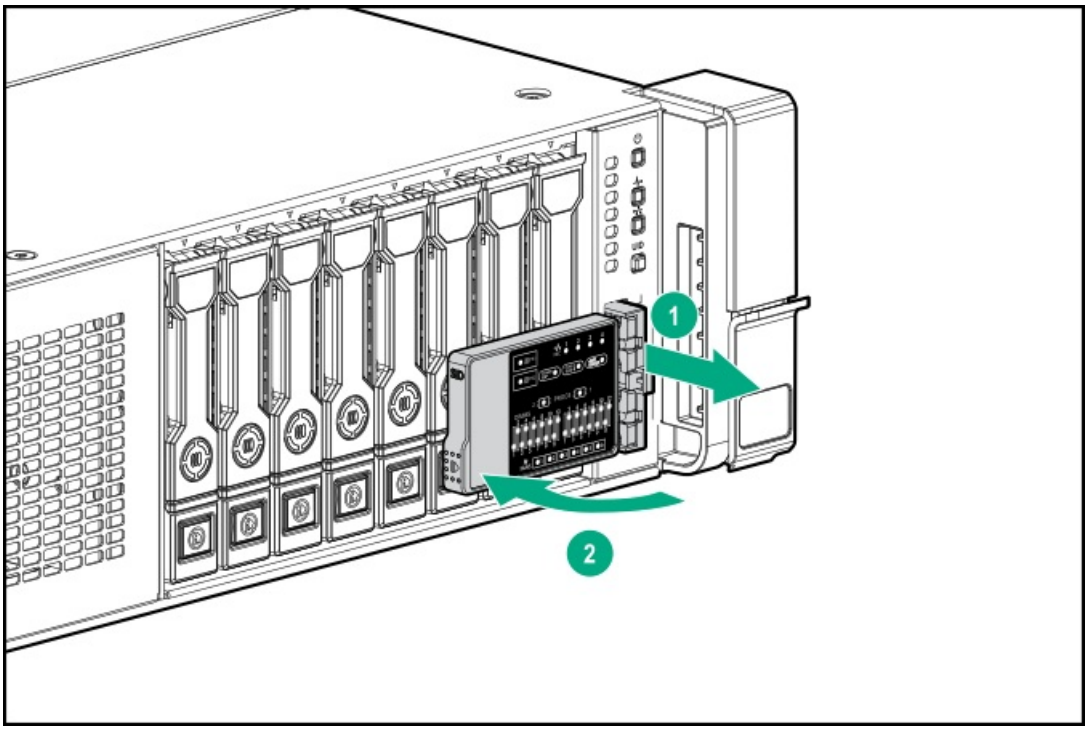

Remove the access panel

WARNING: To reduce the risk of personal injury from hot surfaces, allow the drives, power supplies, and internal system components to cool before touching them.

CAUTION:

Do not operate the chassis for long periods with the access panel open or removed. Operating the chassis in this manner results in improper airflow and improper cooling that can lead to thermal damage.

Procedure

1. Power down the server.
2. Extend the server from the rack.
3. Open or unlock the locking latch, slide the access panel to the rear of the chassis, and remove the access panel.

Release the full-length expansion board retainer

Procedure

1. Power down the server (Power down the server).
2. Remove all power:
   a. Disconnect each power cord from the power source.
   b. Disconnect each power cord from the server.
3. Do one of the following:
   - Extend the server from the rack (Extend the server from the rack).
   - Remove the server from the rack (Remove the server from the rack).
4. Remove the access panel (Remove the access panel).
5. Remove the air baffle (Removing the air baffle).
6. Remove the air baffle diverters.

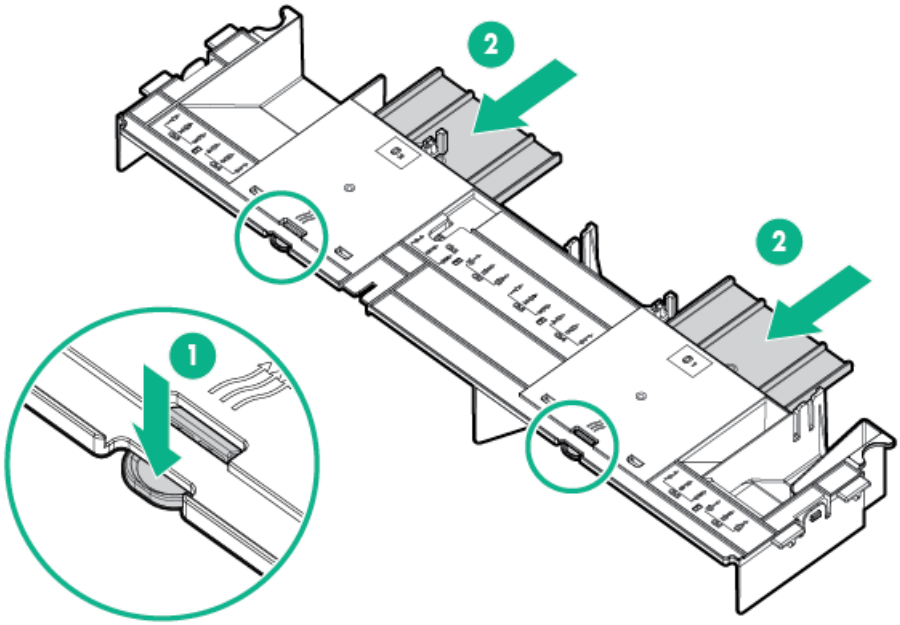

7. Install the air baffle.
8. Release the full-length expansion board retainer.

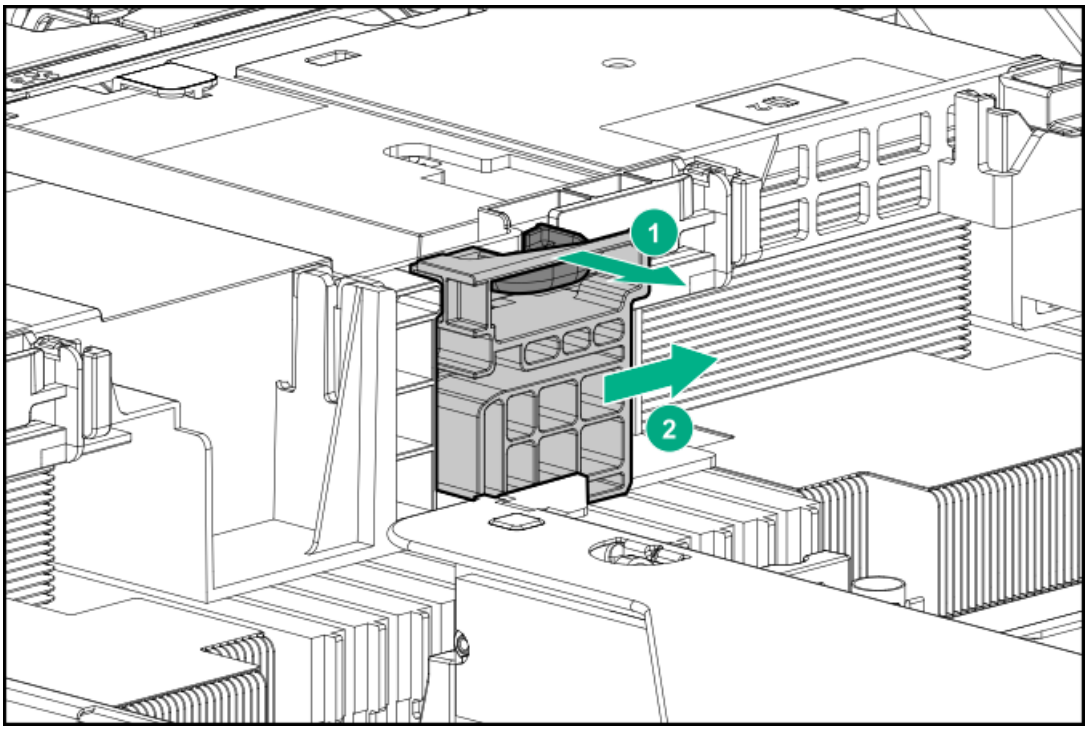

To replace the component, reverse the removal procedure.

Removing the bezel

Procedure

Remove the component as indicated.

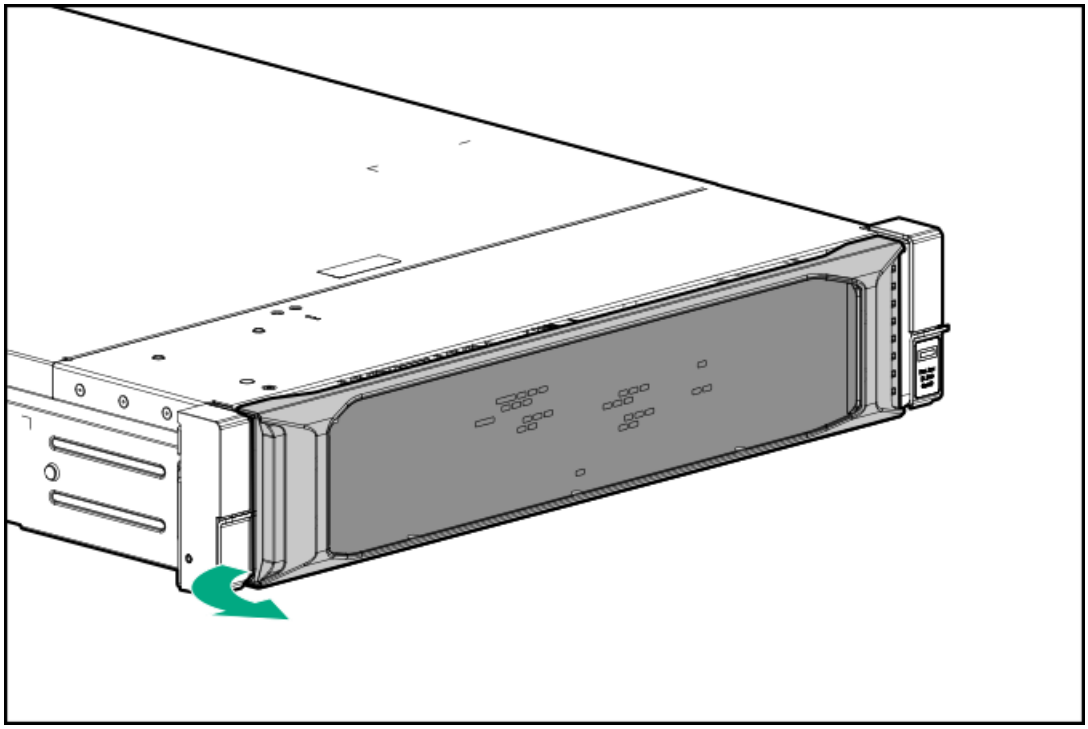

Removing and replacing the rack rails

WARNING:

To reduce the risk of personal injury or damage to the equipment, you must adequately support the enclosure during installation and removal.

Prerequisites

Before you begin, be sure that you have the appropriate screwdriver for the screws in the rack.

Procedure

1. Power down the server.
2. Extend the server from the rack.
3. Disconnect the cabling and remove the server from the rack. For more information, see the documentation that ships with the rack mounting option.
4. Place the server on a sturdy, level surface.

NOTE:

When removing the rail from the rack, always remove the front of the rail first.

5. Open the latch and remove the screws from the front of the rail.

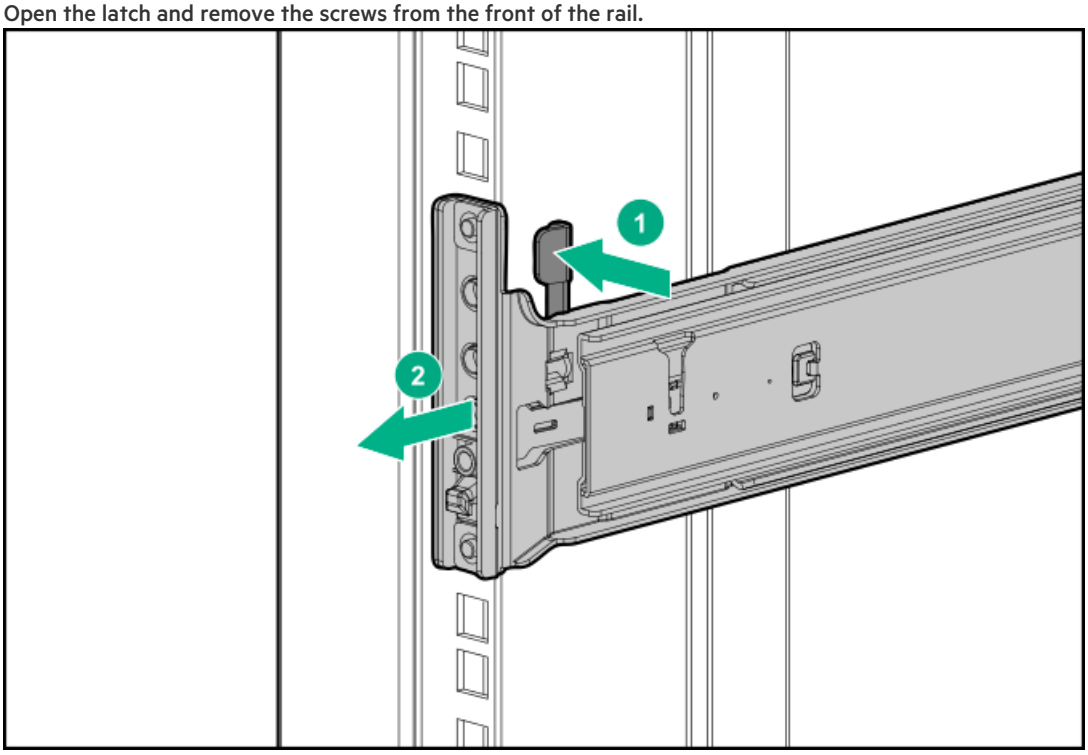

6. Open the latch and remove the screws from the rear of the rail.

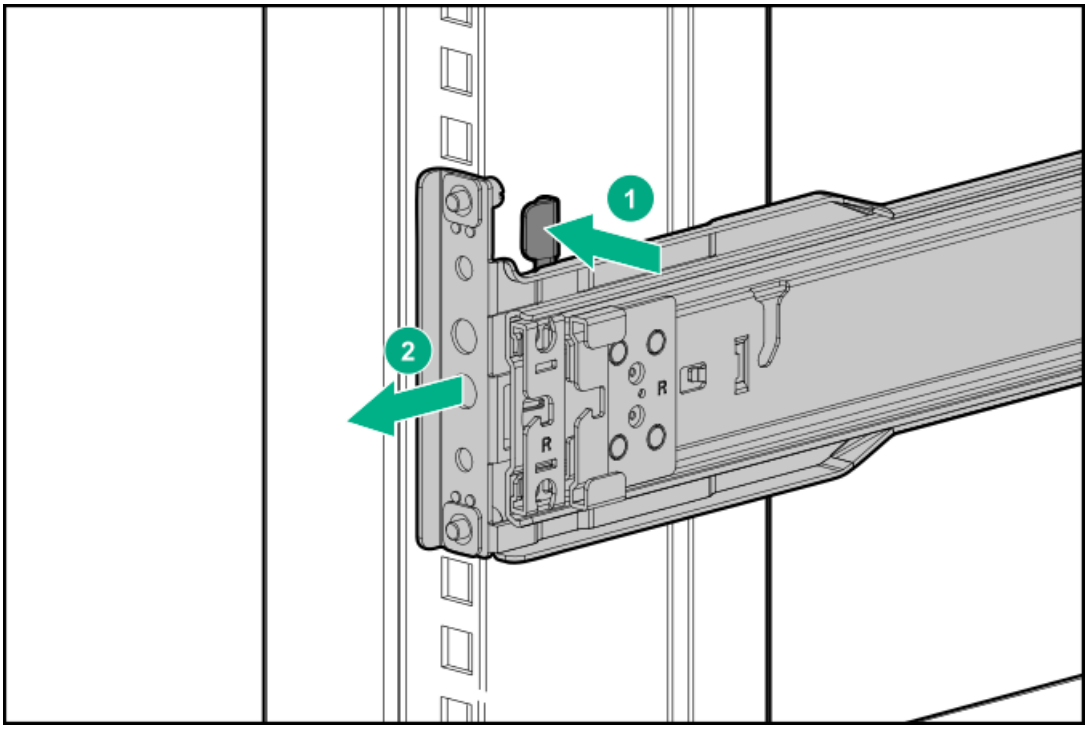

Procedure

To replace the component, reverse the removal procedure.

Removing and replacing the cable management arm

IMPORTANT: Support the CMA during the removal/replacement procedure. Do not allow it to hang by its own weight during the procedure.

Procedure

1. Extend the server from the rack.
2. Open the cable clamps and remove the cables routed through the CMA.

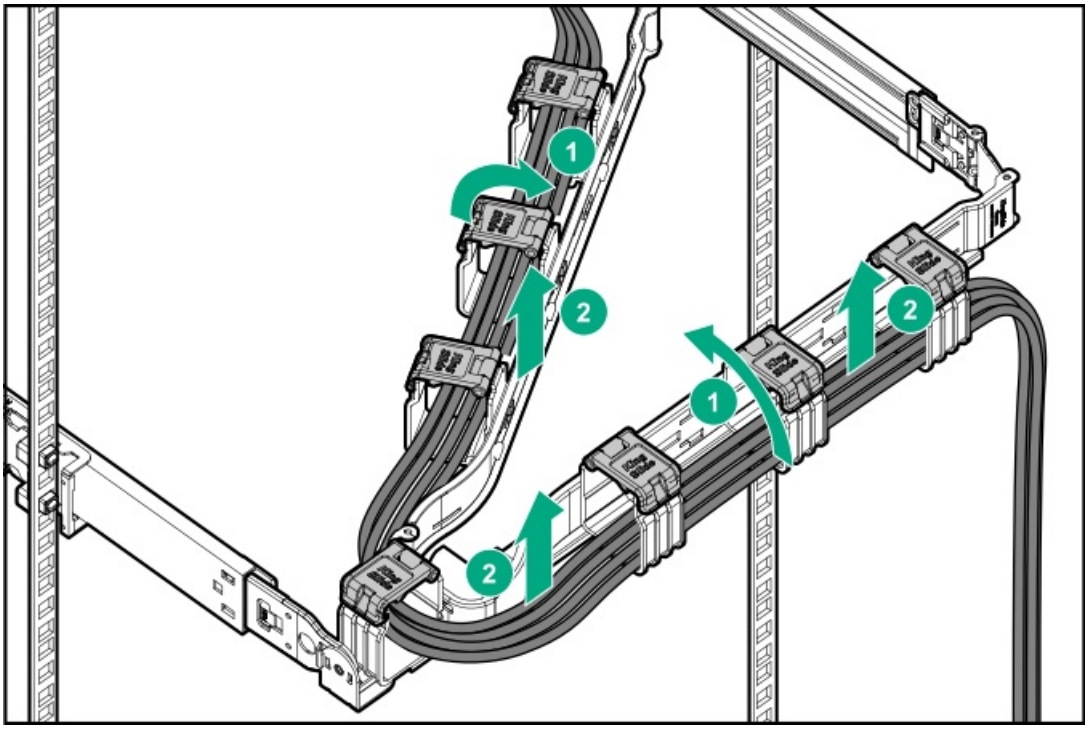

3. Remove the CMA from the rack.
   a. Press the latch on the outer rail of the right CMA and slide out the CMA arm.
   b. Press the blue latch on the left inner and outer rails of the CMA.
   c. Remove the CMA.

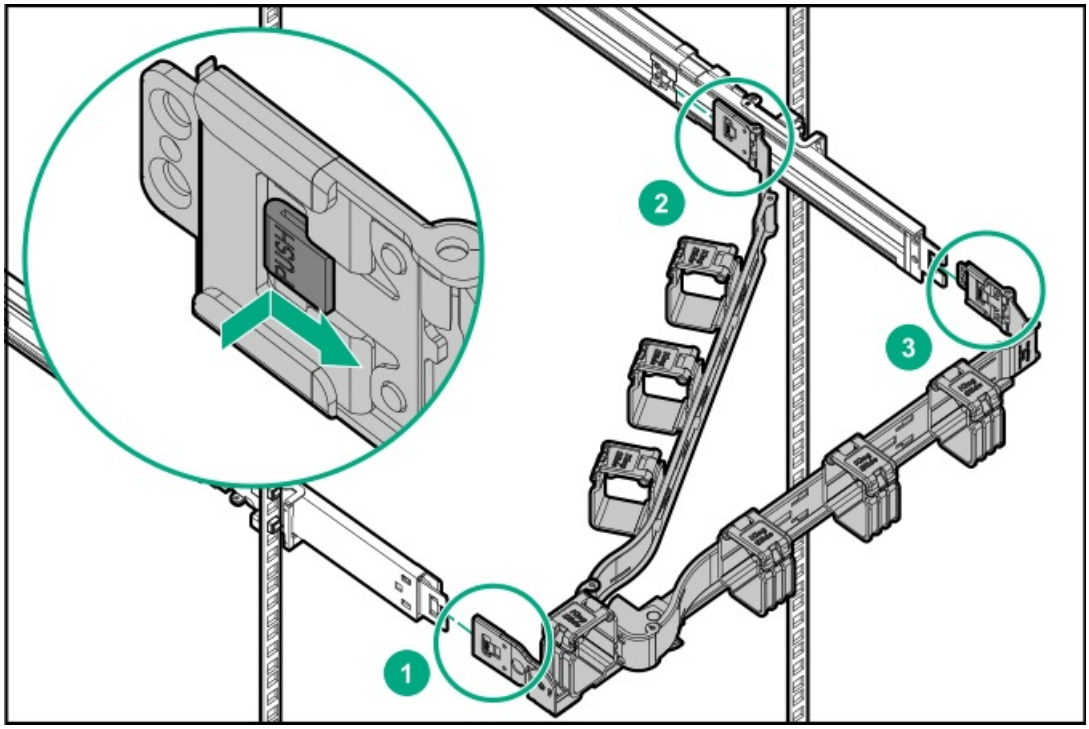

To replace the component, reverse the removal procedure.

Removing and replacing a drive blank

CAUTION: To prevent improper cooling and thermal damage, do not operate the server unless all bays are populated with either a component or a blank.

Procedure

1. Remove the drive blank.

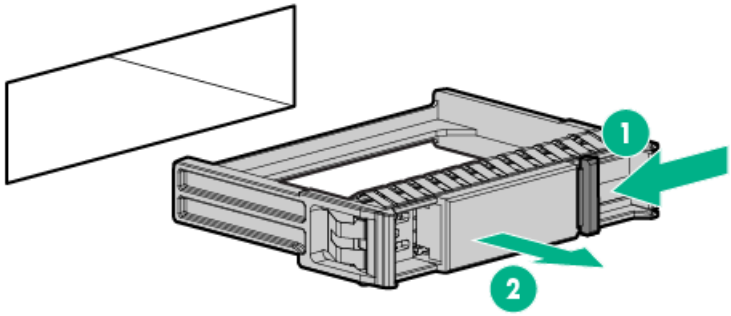

2. To replace the blank, slide the blank into the bay until it locks into place.

Removing and replacing drives

Removing and replacing a hot-plug drive

> △ **CAUTION:** To prevent improper cooling and thermal damage, do not operate the server unless all bays are populated with either a component or a blank.

Procedure

1. Back up all server data on the drive.
2. Determine the status of the drive from the drive LED definitions (SAS/SATA drive components and LEDs).
3. Remove the drive.

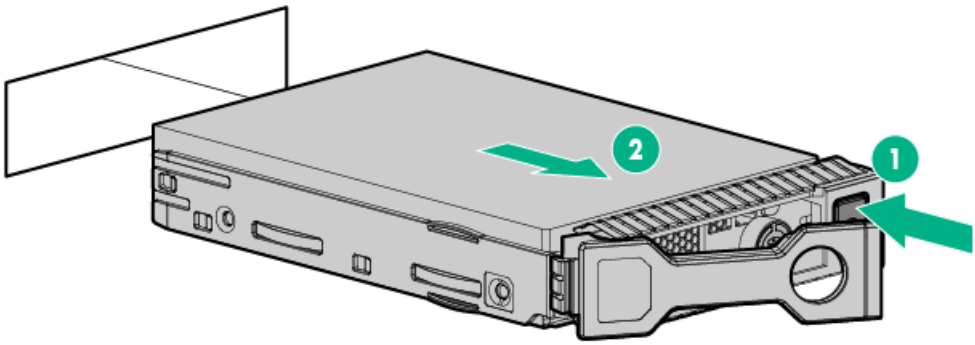

To replace the component, reverse the removal procedure.

Removing and replacing an NVMe drive

An NVMe SSD is a PCIe BUS device. Devices attached to a PCIe bus cannot be removed without allowing the device and the bus to complete and cease signal/traffic flow.

Procedure

1. Before removing the NVMe drive, back up all data on all logical NVDIMMs to alternative storage.

   CAUTION:

   Before removing and replacing the NVMe SSDs, always back up the data on the logical NVDIMMs. Failure to back up the data will result in data loss.

2. Observe the NVMe SSD LED status and determine if the server can be powered down.
3. Power down the server (Power down the server).
4. Remove all power:
   a. Disconnect each power cord from the power source.
   b. Disconnect each power cord from the server.
5. Remove the drive:
   a. Push the Power button.

      The Do Not Remove button illuminates and flashes.
   b. Wait until the flashing stops and the Do Not Remove button is no longer illuminated.
   c. Push the Do Not Remove button and then remove the drive.

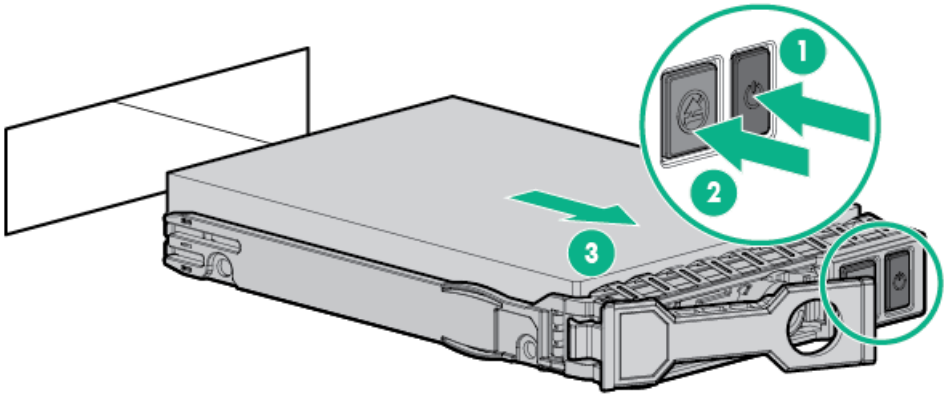

6. Reconfigure the Persistent Memory Option settings.

   For more information, see the HPE Scalable Persistent Memory User Guide on the Hewlett Packard Enterprise website (http://www.hpe.com/info/nvdimm-docs).
7. If necessary, restore the backed-up data to the logical NVDIMMs from the alternative storage.

Removing and replacing an M.2 SSD

Procedure

1. Power down the server (Power down the server).
2. Remove all power:
   a. Disconnect each power cord from the power source.
   b. Disconnect each power cord from the server.
3. Do one of the following:
   - Extend the server from the rack (Extend the server from the rack).
   - Remove the server from the rack (Remove the server from the rack).
4. Remove the access panel (Remove the access panel).
5. Remove the primary riser cage (Removing and replacing the primary or secondary PCIe riser cages).
6. Remove the M.2 SSD.

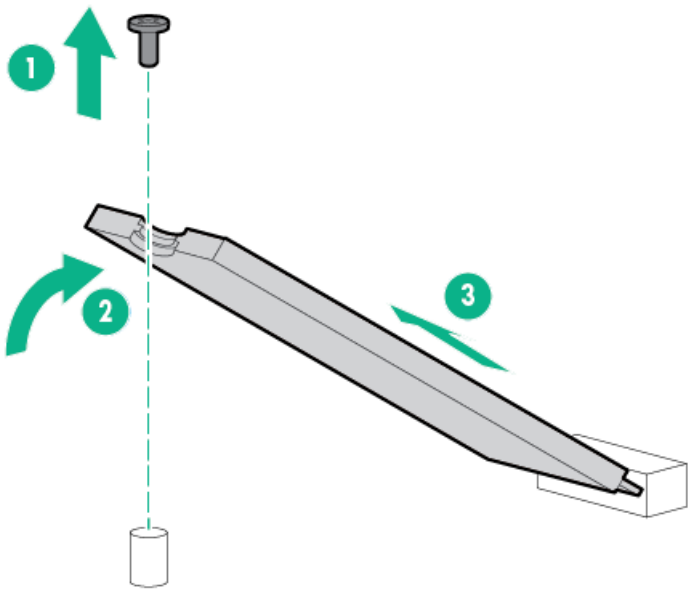

To replace the component, reverse the removal procedure.

Removing and replacing the hot-plug fan

Procedure

1. Extend the server from the rack (Extend the server from the rack).
2. Remove the access panel (Remove the access panel).

   CAUTION: Do not operate the server for long periods with the access panel open or removed. Operating the server in this manner results in improper airflow and improper cooling that can lead to thermal damage.

   IMPORTANT: For optimum cooling, install fans in all primary fan locations.

   For more information, refer to the fan locations table in the server user guide.
3. Remove the fan.

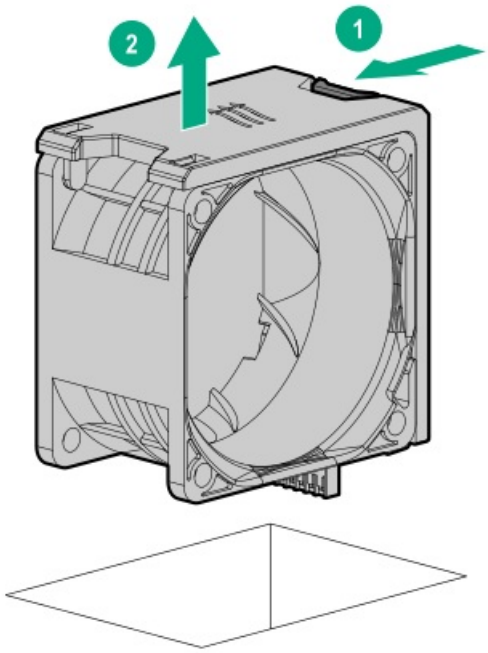

To replace the component, reverse the removal procedure.

Removing and replacing a power supply blank

WARNING: To reduce the risk of personal injury from hot surfaces, allow the power supply or power supply blank to cool before touching it.

CAUTION: To prevent improper cooling and thermal damage, do not operate the server unless all bays are populated with either a component or a blank.

Procedure

1. Remove the power supply blank.

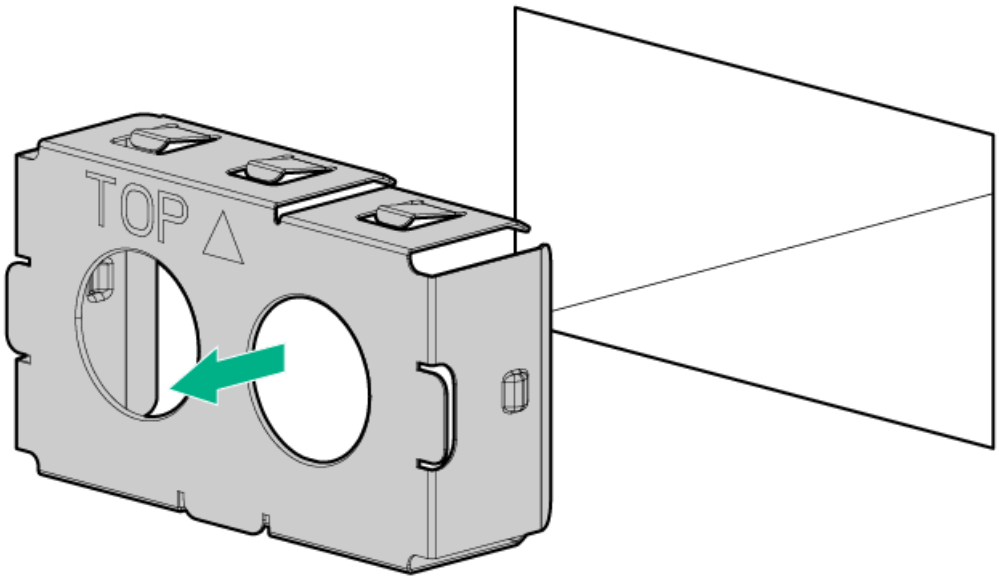

2. Immediately install the replacement power supply blank spare.

Removing and replacing the AC power supply

WARNING:

To reduce the risk of personal injury, fire, or damage to the equipment, do not overload the AC supply branch circuit that provides power to the rack. Consult the electrical authority having jurisdiction over wiring and installation requirements of your facility.

CAUTION: To prevent damage to electrical components, properly ground the server before beginning any installation procedure. Improper grounding can cause electrostatic discharge.

CAUTION:

To prevent improper cooling and thermal damage, do not operate the server or the enclosure unless all drive and device bays are populated with either a component or a blank.

Procedure

1. If the server is using a single power supply:
   a. Back up all server data.
   b. Power down the server (Power down the server).
   c. Disconnect all peripheral cables from the server.
2. Access the product rear panel (Access the product rear panel).
3. Disconnect the cable from the power supply.
4. Remove the power supply.

WARNING: To reduce the risk of personal injury from hot surfaces, allow the power supply or power supply blank to cool before touching it.

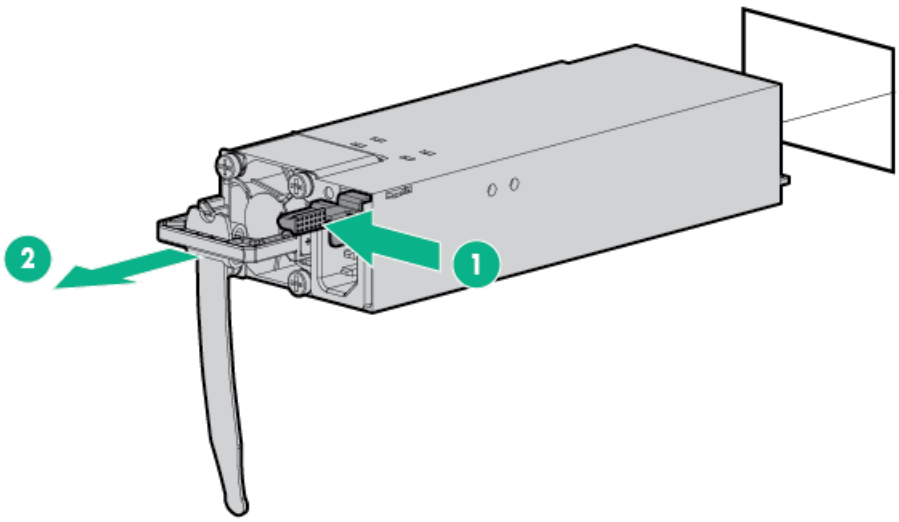

To replace the component, reverse the removal procedure.

Removing and replacing the HPE 800W Flex Slot Scalable Persistent Memory Power Supply

CAUTION: To prevent improper cooling and thermal damage, do not operate the server unless all bays are populated with either a component or a blank.

Procedure

1. Access the product rear panel.
2. Remove the power supply.

WARNING: To reduce the risk of personal injury from hot surfaces, allow the power supply or power supply blank to cool before touching it.

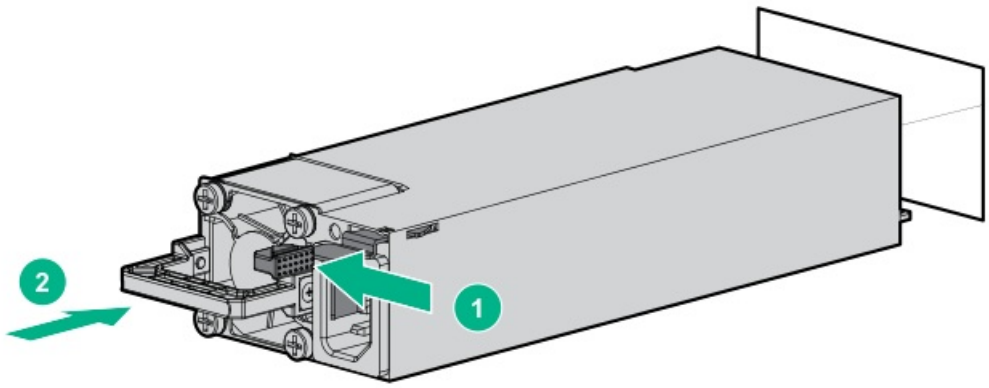

To replace the component, reverse the removal procedure.

Removing the air baffle

CAUTION: Do not detach the cable that connects the battery pack to the cache module. Detaching the cable causes any unsaved data in the cache module to be lost.

CAUTION: For proper cooling, do not operate the server without the access panel, baffles, expansion slot covers, or blanks installed. If the server supports hot-plug components, minimize the amount of time the access panel is open.

Procedure

1. Power down the server (Power down the server).
2. Remove all power:
   a. Disconnect each power cord from the power source.
   b. Disconnect each power cord from the server.
3. Do one of the following:
   - Extend the server from the rack (Extend the server from the rack).
   - Remove the server from the rack (Remove the server from the rack).
4. Remove the access panel (Remove the access panel).
5. Remove the air baffle.

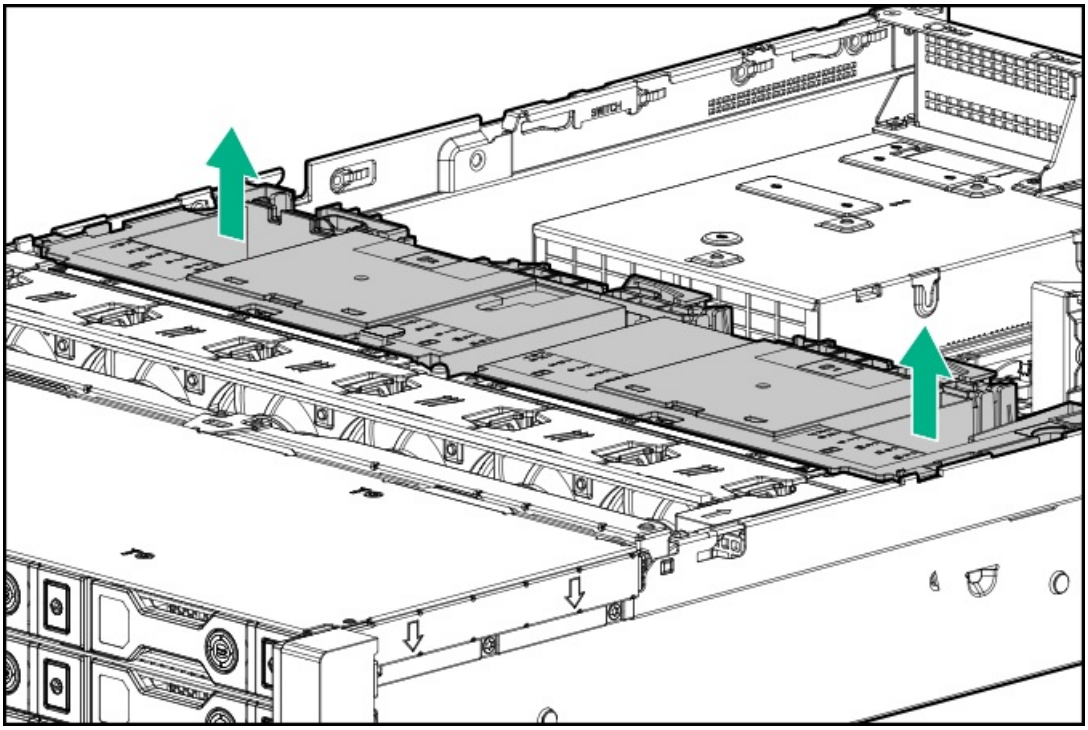

To replace the component, reverse the removal procedure.

Removing and replacing the Scalable Persistent Memory air baffle

CAUTION: Do not detach the cable that connects the battery pack to the cache module. Detaching the cable causes any unsaved data in the cache module to be lost.

CAUTION: For proper cooling, do not operate the server without the access panel, baffles, expansion slot covers, or blanks installed. If the server supports hot-plug components, minimize the amount of time the access panel is open.

Procedure

1. Power down the server (Power down the server).
2. Remove all power:
   a. Disconnect each power cord from the power source.
   b. Disconnect each power cord from the server.
3. Do one of the following:
   - Extend the server from the rack (Extend the server from the rack).
   - Remove the server from the rack (Remove the server from the rack).
4. Remove the access panel (Remove the access panel).
5. Remove the air baffle.

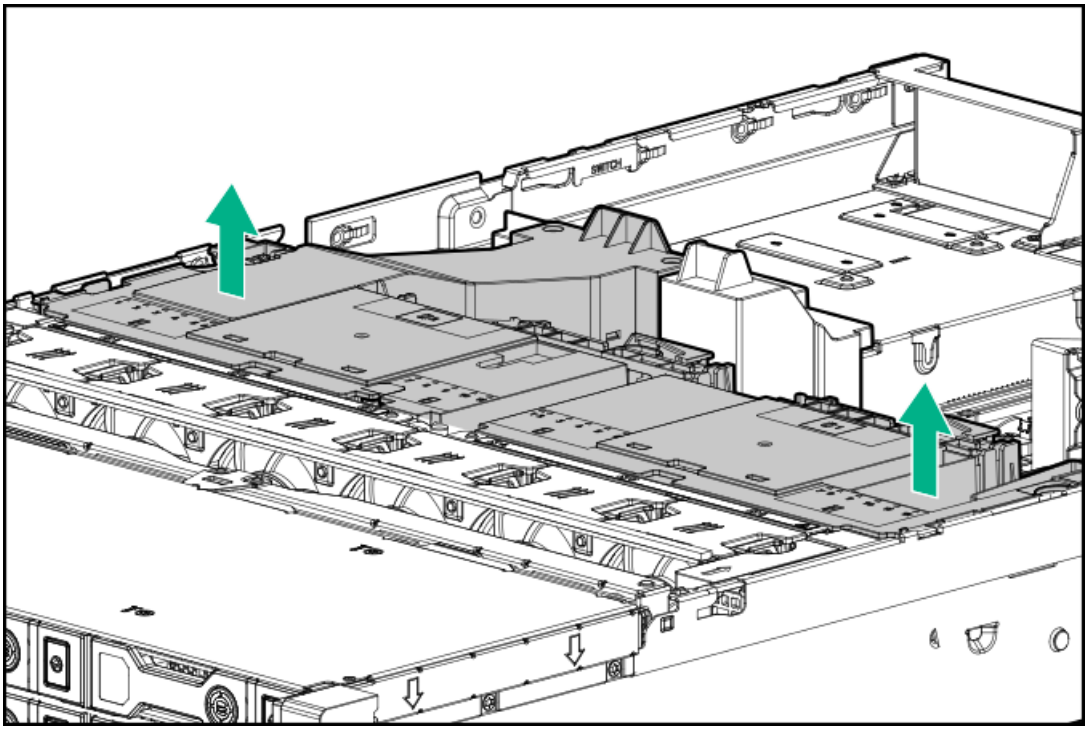

6. Remove the baffle intake, if needed.

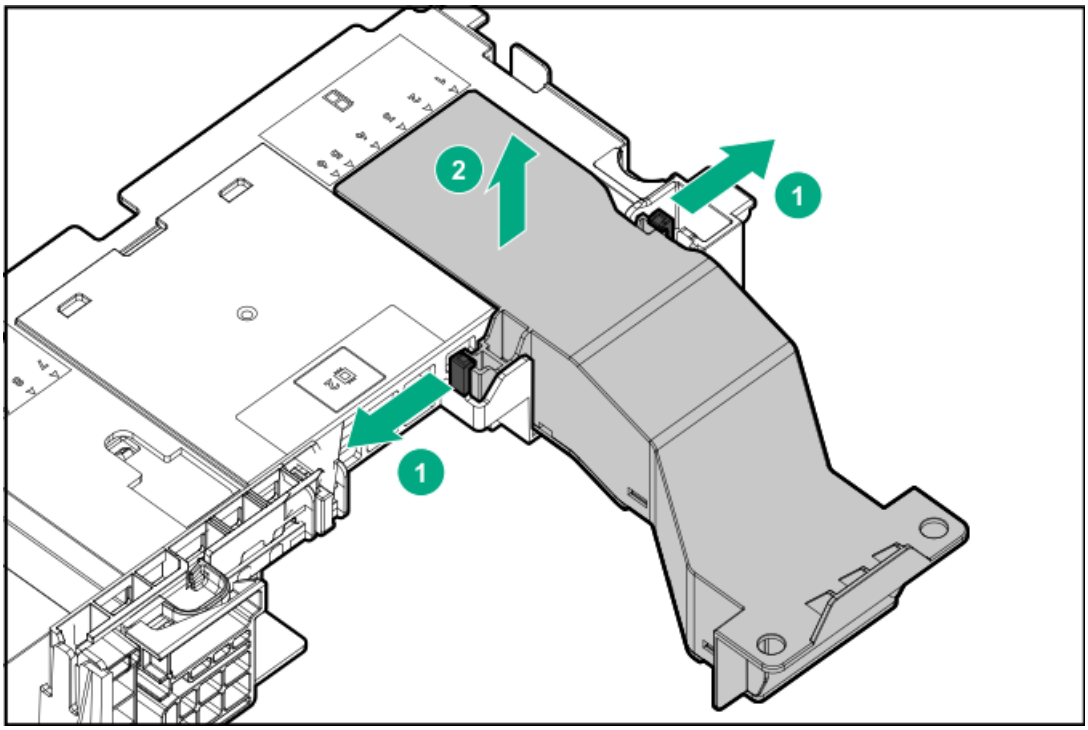

To replace the component, reverse the removal procedure.

Removing and replacing the primary or secondary PCIe riser cages

CAUTION: To prevent improper cooling and thermal damage, do not operate the server unless all PCI slots have either an expansion slot cover or an expansion board installed.

Procedure

1. Power down the server (Power down the server).
2. Remove all power:
   a. Disconnect each power cord from the power source.
   b. Disconnect each power cord from the server.
3. Disconnect any external cables that are connected to the expansion board.
4. Do one of the following:
   - Extend the server from the rack (Extend the server from the rack).
   - Remove the server from the rack (Remove the server from the rack).
5. Remove the access panel (Remove the access panel).
6. Disconnect any internal cables that are connected to the expansion board.
7. If any full-length expansion boards are installed, release the full-length expansion board retainer (Release the full-length expansion board retainer).
8. Remove the PCIe riser cage.

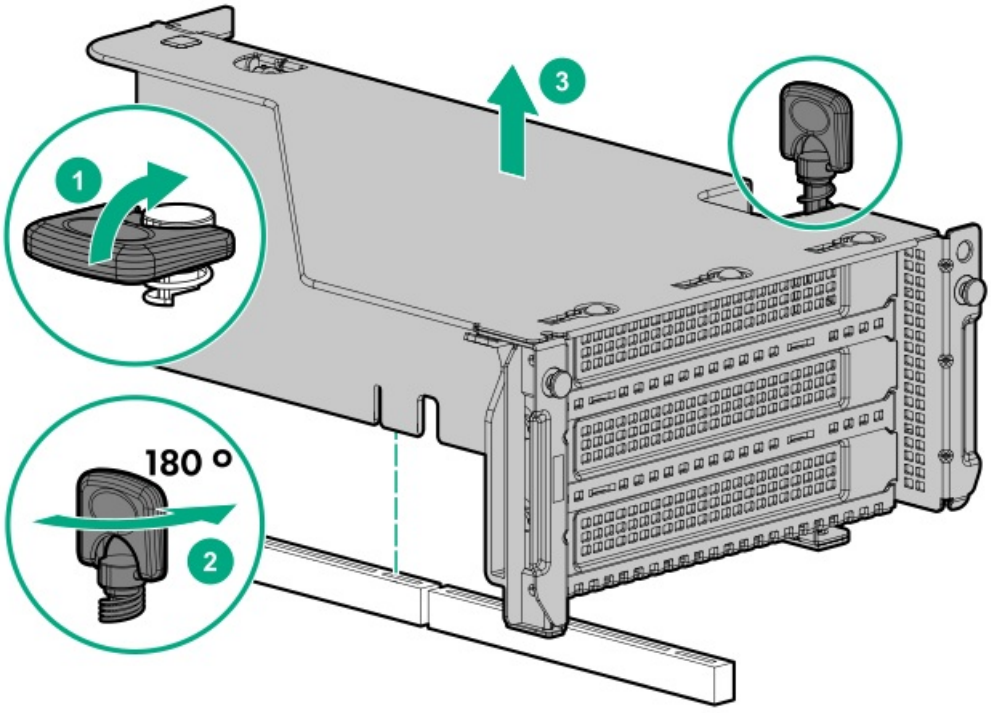

9. To replace the component, reverse the removal procedure.

To replace the component, reverse the removal procedure.

Removing and replacing the tertiary PCIe riser cage

> **CAUTION:** To prevent improper cooling and thermal damage, do not operate the server unless all PCI slots have either an expansion slot cover or an expansion board installed.

Procedure

1. Power down the server (Power down the server).
2. Remove all power:
   a. Disconnect each power cord from the power source.
   b. Disconnect each power cord from the server.
3. Disconnect any external cables that are connected to the expansion board.
4. Do one of the following:
   - Extend the server from the rack (Extend the server from the rack).
   - Remove the server from the rack (Remove the server from the rack).
5. Remove the access panel (Remove the access panel).
6. Disconnect any internal cables that are connected to the expansion board.
7. If any full-length expansion boards are installed, release the full-length expansion board retainer (Release the full-length expansion board retainer).
8. Remove the PCIe riser cage.

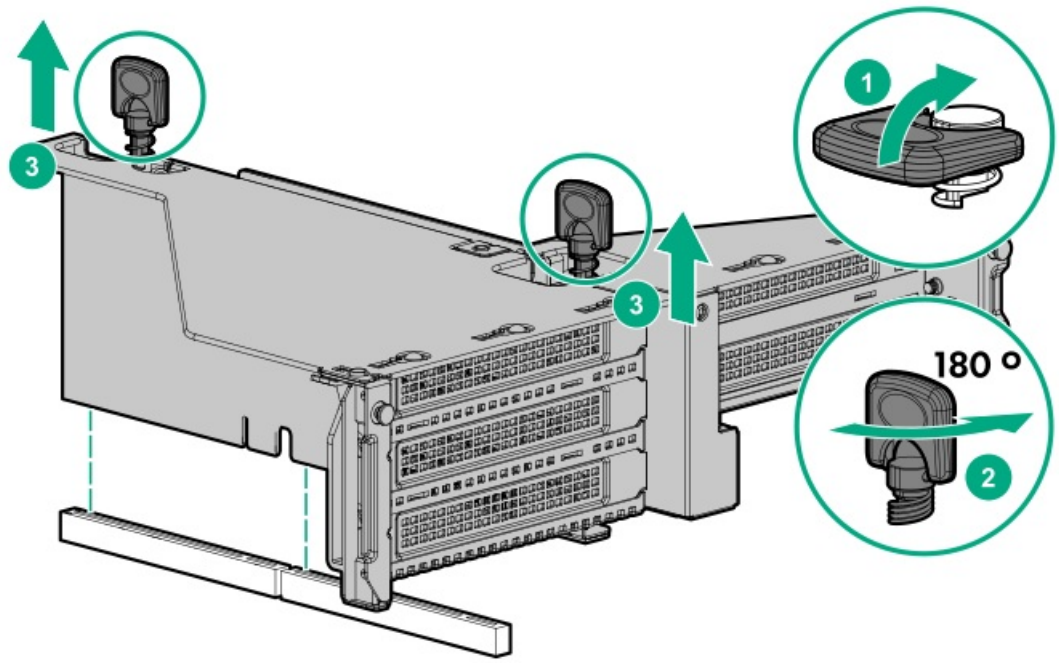

To replace the component, reverse the removal procedure.

Removing and replacing the PCIe riser blank

CAUTION: To prevent improper cooling and thermal damage, do not operate the server unless all PCI slots have either an expansion slot cover or an expansion board installed.

Procedure

1. Power down the server (Power down the server).
2. Remove all power:
   a. Disconnect each power cord from the power source.
   b. Disconnect each power cord from the server.
3. Do one of the following:
   - Extend the server from the rack (Extend the server from the rack).
   - Remove the server from the rack (Remove the server from the rack).
4. Remove the access panel (Remove the access panel).
5. Remove the PCIe riser blank:
   - Primary or secondary

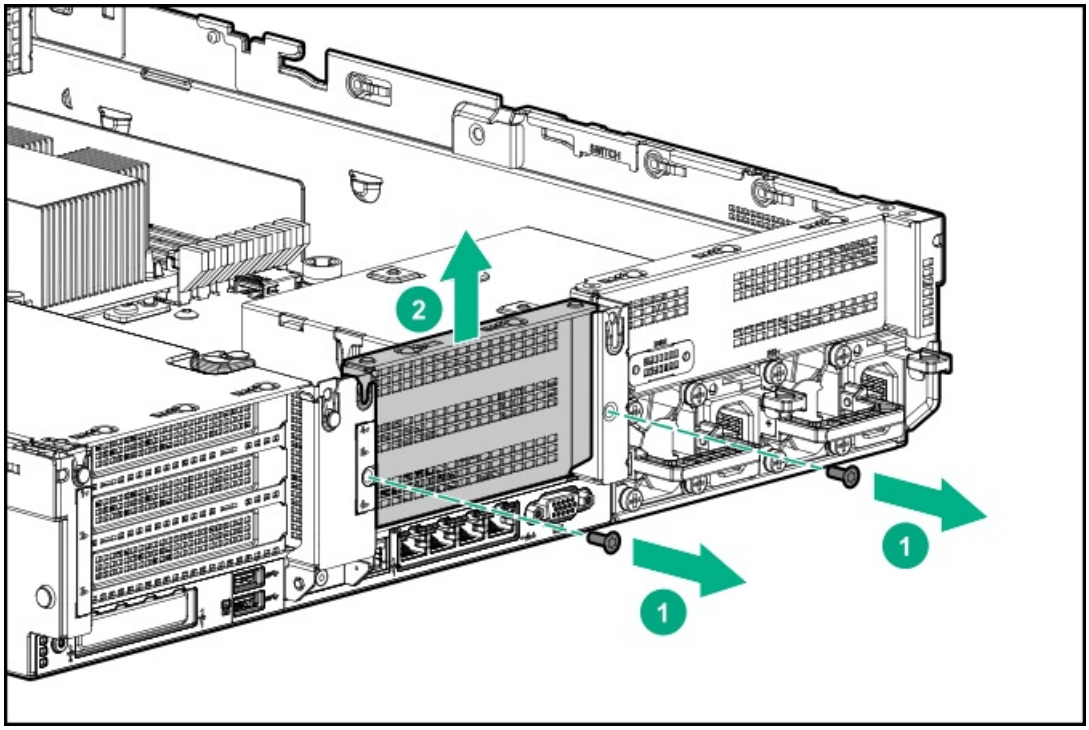

   - Tertiary

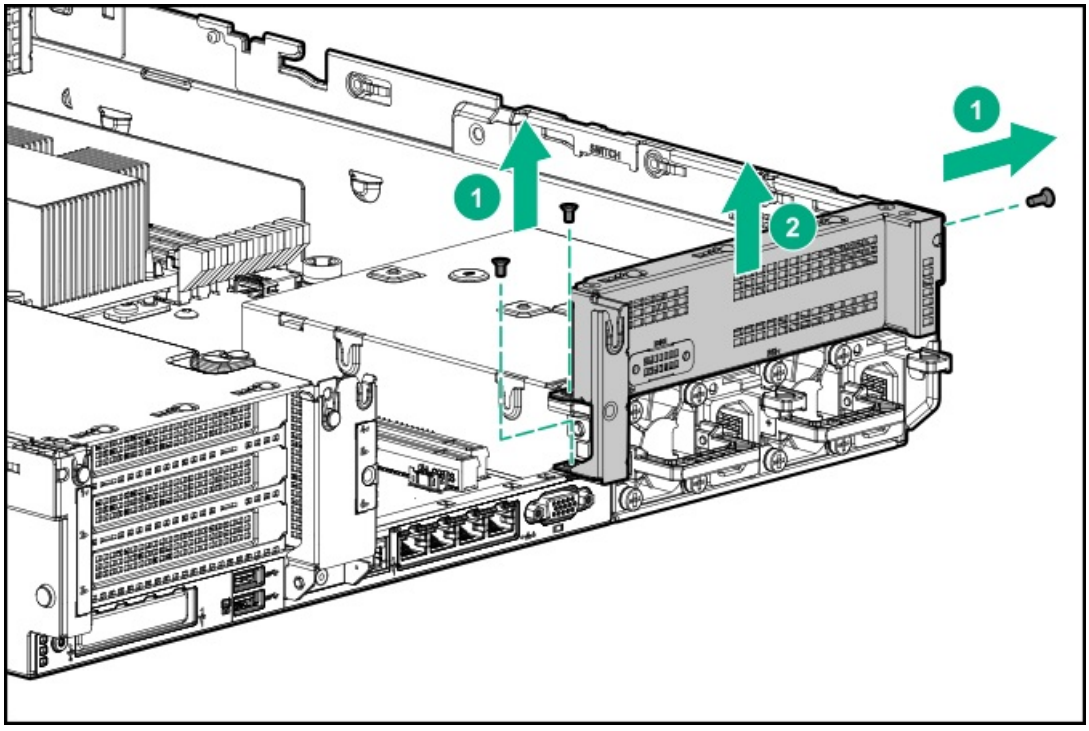

To replace the component, reverse the removal procedure.

Removing and replacing the PCIe riser board

Procedure

1. Power down the server (Power down the server).
2. Remove all power:
   a. Disconnect each power cord from the power source.
   b. Disconnect each power cord from the server.
3. Do one of the following:
   - Extend the server from the rack (Extend the server from the rack).
   - Remove the server from the rack (Remove the server from the rack).
4. Remove the access panel (Remove the access panel).
5. If any full-length expansion boards are installed, release the full-length expansion board retainer (Release the full-length expansion board retainer).
6. Remove the PCIe riser cage:
   - Primary or secondary PCIe riser cage (Removing and replacing the primary or secondary PCIe riser cages)
   - Tertiary PCIe riser cage (Removing and replacing the tertiary PCIe riser cage)
7. Remove any expansion boards from the PCIe riser cage.
8. Remove the PCIe riser board:
   - Primary/secondary riser cage

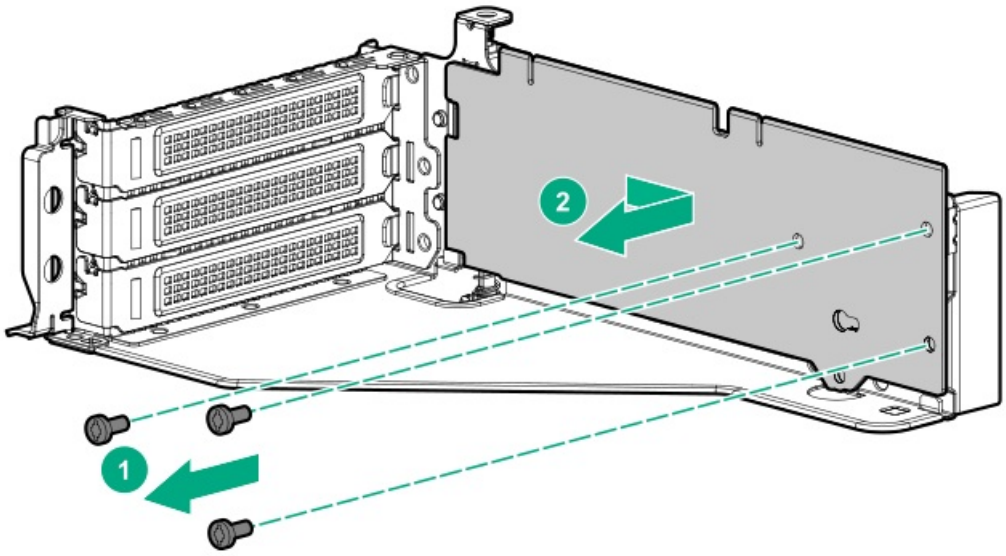

   - Tertiary riser cage

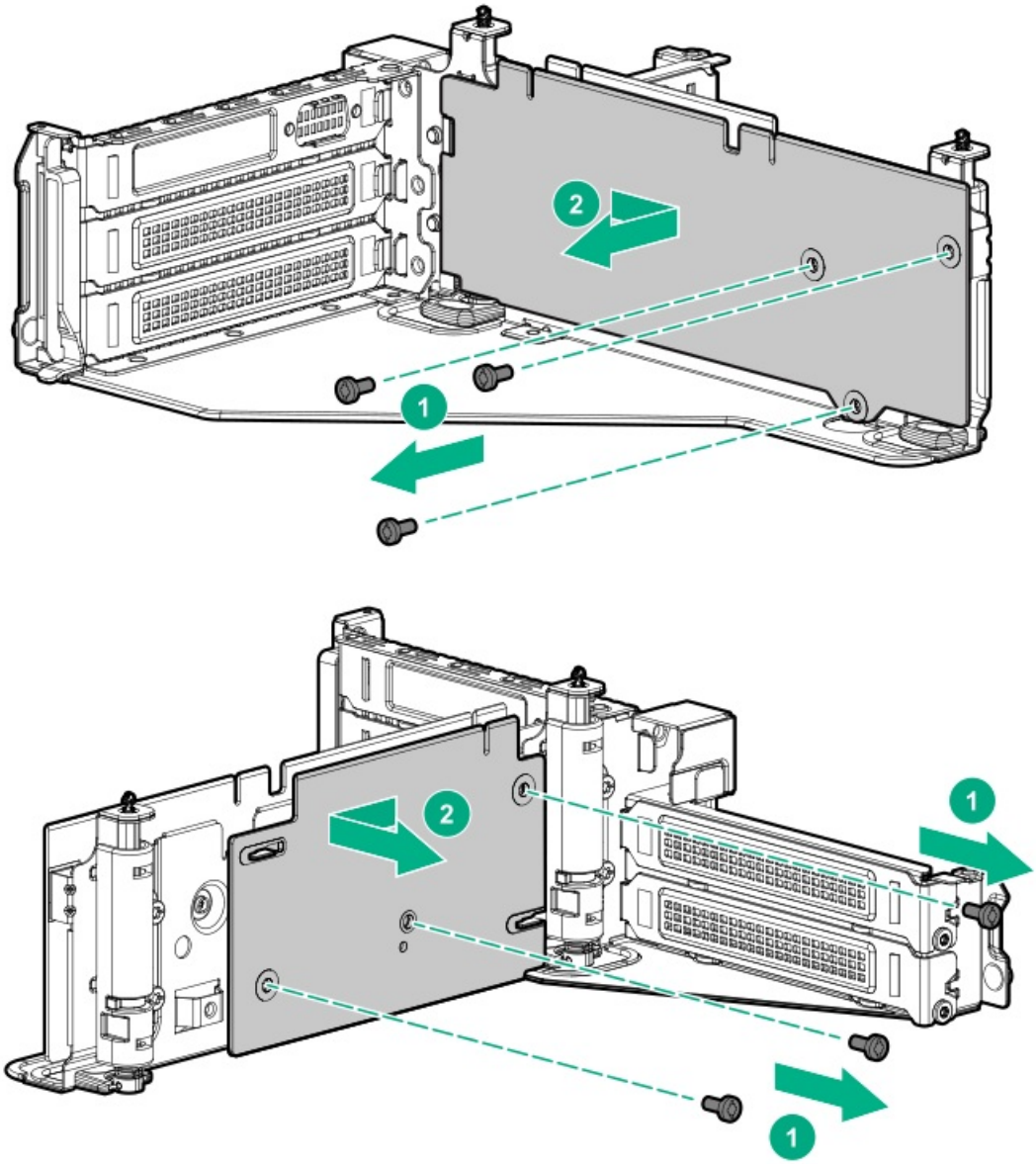

To replace the component, reverse the removal procedure.

Removing and replacing an expansion slot blank

WARNING: To reduce the risk of personal injury, electric shock, or damage to the equipment, remove power from the server by removing the power cord. The front panel Power On/Standby button does not shut off system power. Portions of the power supply and some internal circuitry remain active until AC power is removed.

CAUTION: For proper cooling, do not operate the server without the access panel, baffles, expansion slot covers, or blanks installed. If the server supports hot-plug components, minimize the amount of time the access panel is open.

Procedure

1. Power down the server (Power down the server).
2. Remove all power:
   a. Disconnect each power cord from the power source.
   b. Disconnect each power cord from the server.
3. Do one of the following:
   - Extend the server from the rack (Extend the server from the rack).
   - Remove the server from the rack (Remove the server from the rack).
4. Remove the access panel (Remove the access panel).
5. Remove the PCIe riser cage:
   - Primary or secondary PCIe riser cage (Removing and replacing the primary or secondary PCIe riser cages)
   - Tertiary PCIe riser cage (Removing and replacing the tertiary PCIe riser cage)
6. Remove the expansion slot blank.

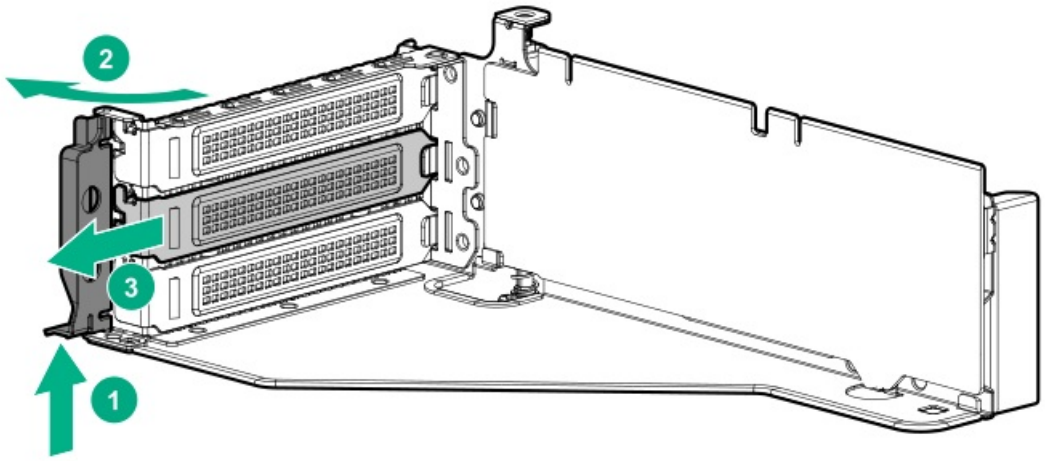

To replace the component, reverse the removal procedure.

Removing and replacing an expansion board

Use these instructions to remove and replace expansion boards such as smart I/O cards (the DSC-25 2-port SFP28 card, for example), solid state NVMe/PCIe Add-In-Cards, HBAs, CNAs, InfiniBand adapters, and accelerators.

> ⚠ **WARNING:** To reduce the risk of personal injury, electric shock, or damage to the equipment, remove power from the server by removing the power cord. The front panel Power On/Standby button does not shut off system power. Portions of the power supply and some internal circuitry remain active until AC power is removed.

Procedure

1. Power down the server (Power down the server).
2. Remove all power:
   a. Disconnect each power cord from the power source.
   b. Disconnect each power cord from the server.
3. Disconnect any external cables that are connected to the expansion board.
4. Do one of the following:
   - Extend the server from the rack (Extend the server from the rack).
   - Remove the server from the rack (Remove the server from the rack).
5. Remove the access panel (Remove the access panel).
6. Disconnect any internal cables that are connected to the expansion board.
7. If any full-length expansion boards are installed, release the full-length expansion board retainer (Release the full-length expansion board retainer).
8. Remove the PCIe riser cage:
   - Primary or secondary PCIe riser cage (Removing and replacing the primary or secondary PCIe riser cages)
   - Tertiary PCIe riser cage (Removing and replacing the tertiary PCIe riser cage)
9. Remove the expansion board.

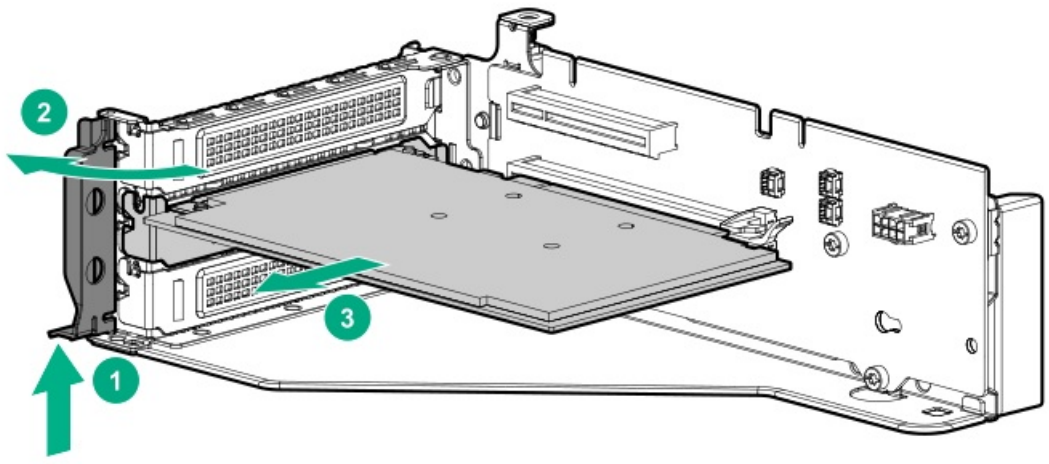

To replace the component, reverse the removal procedure.

Removing and replacing the Pensando DSP DSC-25 2p SFP28 card with the iLO Sideband ALOM Module

Decommissioning the Pensando DSP DSC-25 2p SFP28 card

Procedure

Before removing the DSC-25 card from the server, you must first decommission the card using the Pensando Policy and Services Manager (PSM).

For more information, see Pensando Distributed Services Card for Single-Wire Management (DSC-25-SWM) Removal/Replacement Guide on the Hewlett Packard Enterprise website (**https://www.hpe.com/support/dsc25-replacement**).

Removing the Pensando DSP DSC-25 2p SFP28 card with the iLO Sideband ALOM Module

Pensando Distributed Services Platform for HPE iLO Sideband Management ALOM Module requires that the accompanying Smart I/O card (such as the Pensando DSP DSC-25 2p SFP28 card) be installed on slot 3 of the primary PCIe riser cage.

Prerequisites

Before installing this option, be sure you have the following:

- The components included with the hardware option kit.
- T-10 Torx screwdriver.

Procedure

1. Observe the following alerts:

   WARNING: To reduce the risk of personal injury from hot surfaces, allow the drives and the internal system components to cool before touching them.

   CAUTION:

   Electrostatic discharge (ESD) can damage electronic components. Be sure that you are properly grounded (earthed) before beginning any installation procedure.

   CAUTION:

   To prevent improper cooling and thermal damage, do not operate the server unless all PCI slots have either an expansion slot cover or an expansion board installed.

2. Power down the server.
3. Remove all power:
   a. Disconnect each power cord from the power source.
   b. Disconnect each power cord from the server.
4. Do one of the following:
   - Extend the server from the rack.
   - Remove the server from the rack.
5. Remove the access panel.
6. Disconnect the auxiliary cable from the DSC-25 card before removing the PCIe riser cage.

   NOTE:

   The PCIe riser cage is not shown in this illustration for clarity purposes.

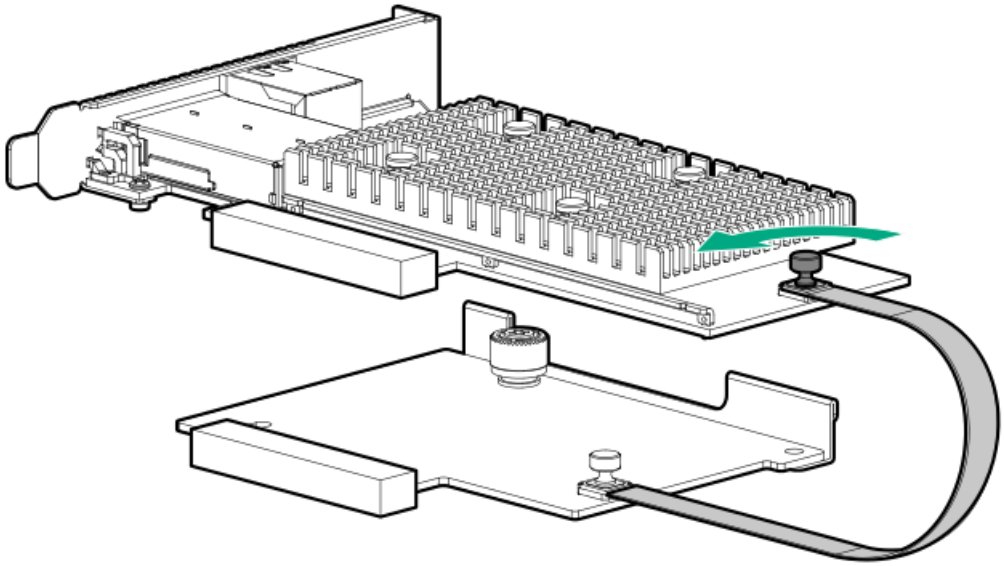

7. Remove the primary PCIe riser cage.

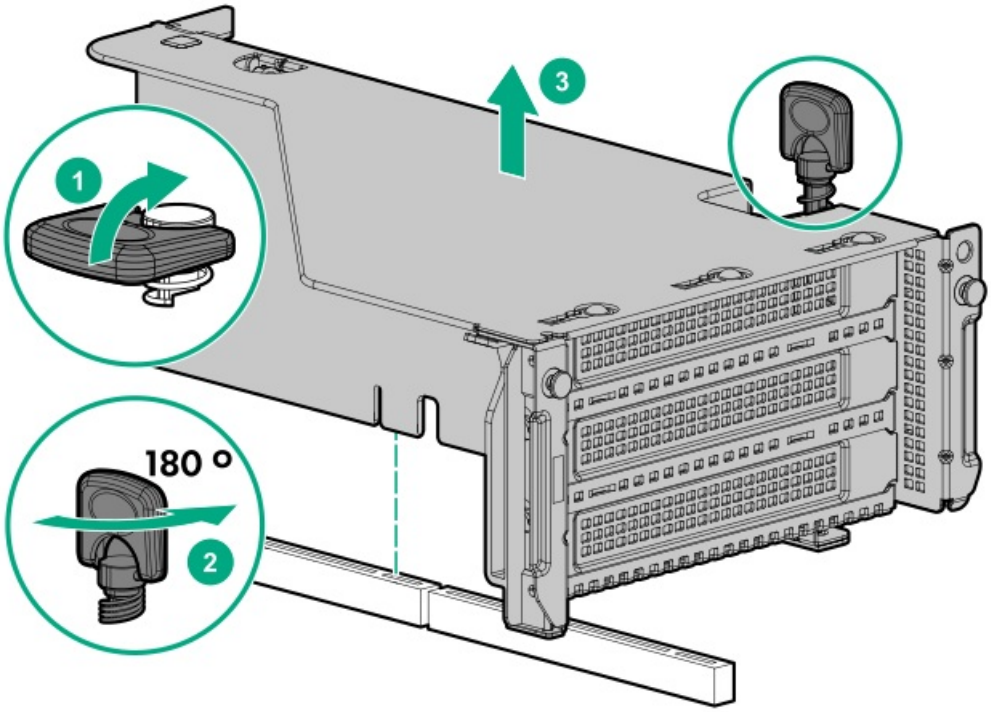

8. Remove the DSC-25 card from the slot:

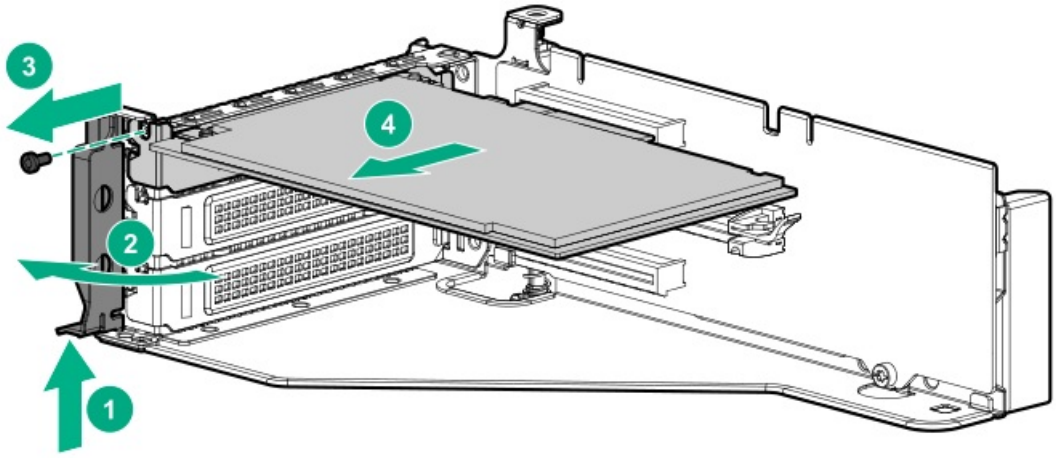

NOTE:

Image may differ from actual product.

9. Disconnect the auxiliary cable from the ALOM module using the thumb screw.

NOTE:

Be sure not to twist the cable.

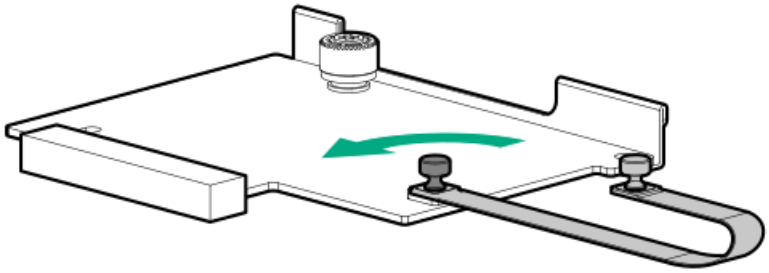

10. Remove the Pensando DSP iLO Sideband ALOM Module from the FlexibleLOM adapter connector on the system board.

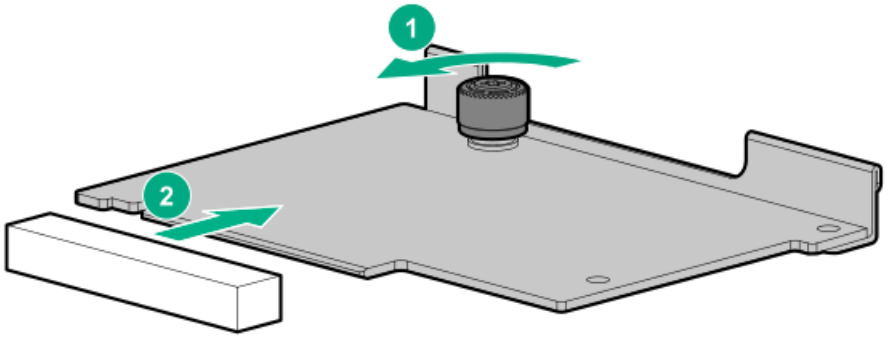

Replacing the Pensando DSP DSC-25 2p SFP28 card with the iLO Sideband ALOM Module

Pensando DSP iLO Sideband ALOM Module requires that the accompanying Smart I/O card (such as the Pensando DSP DSC-25 2p SFP28 card) be installed on slot 3 of the primary PCIe riser cage.

Prerequisites

Before installing this option, be sure you have the following:

- The components included with the hardware option kit.
- T-10 Torx screwdriver.

Procedure

1. Install the Pensando DSP iLO Sideband ALOM Module into the FlexibleLOM adapter connector on the system board.

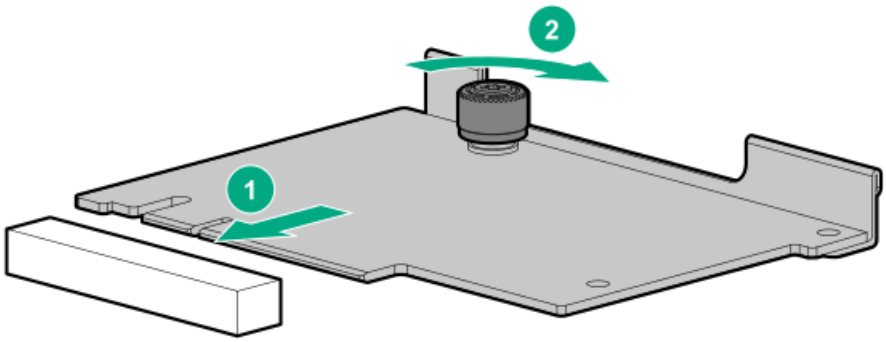

2. Remove the shipping cap from the auxiliary cable.
3. Connect the auxiliary cable to the iLO Sideband ALOM Module:
   a. Align the connector keying posts to the ALOM module.
   b. Secure the auxiliary cable to the ALOM module using the thumbscrew.

> **CAUTION:**
> Do not over torque the screw.

> **CAUTION:**
> Do not use a screwdriver to tighten the screw.

> **CAUTION:**
> Do not twist the cable service loop during installation.

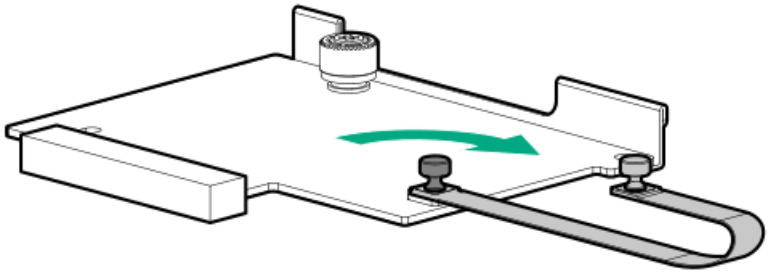

4. Install the DSC-25 card into the PCIe slot.

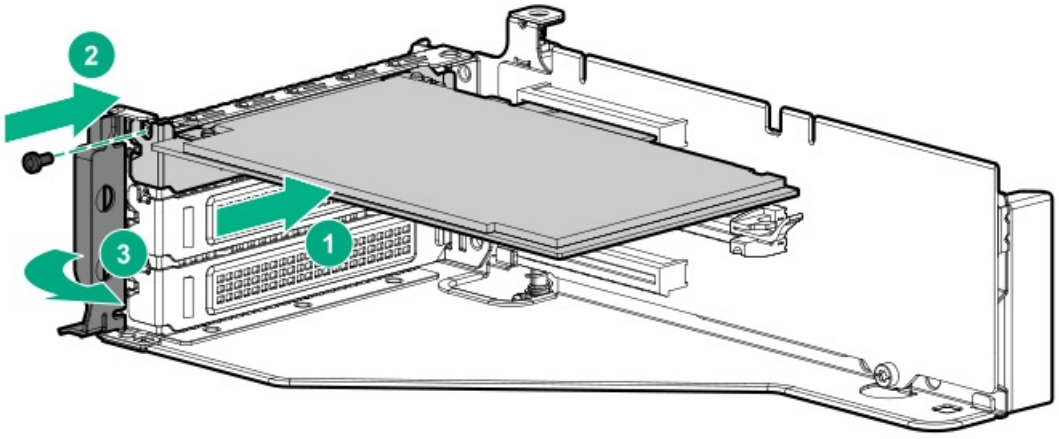

5. Install the PCIe riser cage into the server.

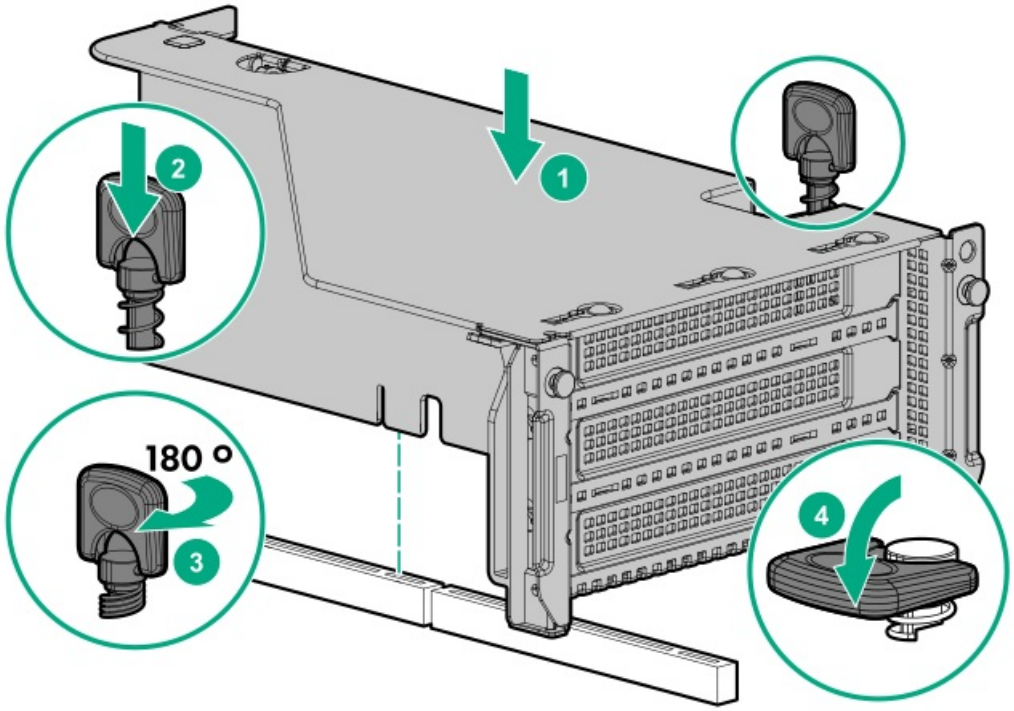

6. Remove the shipping cap from the auxiliary cable.
7. Connect the auxiliary cable to the DSC-25 card:
   a. Align the connector keying posts to the DSC-25 card.
   b. Secure the auxiliary cable to the DSC-25 card using the thumbscrew.

CAUTION:

Do not over torque the screw.

CAUTION:

Do not use a screwdriver to tighten the screw.

CAUTION:

Do not twist the cable service loop during installation.

NOTE:

The PCIe riser cage is not shown in this illustration for clarity purposes.

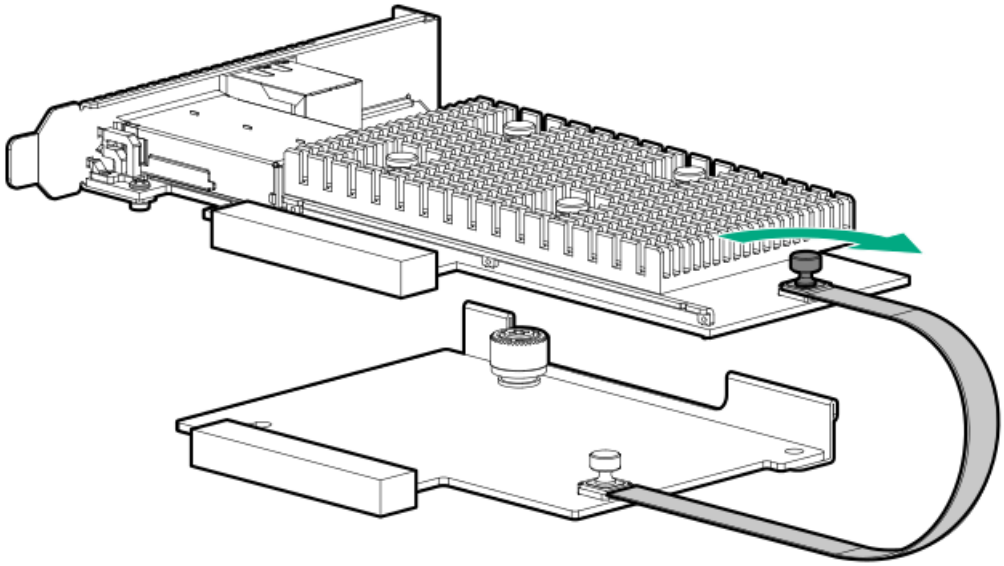

8. Install the access panel.
9. Slide the server into the rack.
10. Connect each power cord to the server.
11. Connect each power cord to the power source.
12. Power up the server.
13. Admit the new DSC-25 card to the Pensando Policy and Services Manager (PSM).

    For more information, see Pensando Distributed Services Card for Single-Wire Management (DSC-25-SWM) Removal/Replacement Guide on the Hewlett Packard Enterprise website (**https://www.hpe.com/support/dsc25-replacement**).

Removing and replacing a 940QSFP56 x16 adapter and auxiliary card

Procedure

1. Power down the server.
2. Remove all power:
   a. Disconnect each power cord from the power source.
   b. Disconnect each power cord from the server.
3. Do one of the following:
   a. Extend the server from the rack.
   b. Remove the server from the rack.
4. Remove the access panel.
5. Remove the riser cage (Removing and replacing the primary or secondary PCIe riser cages).
6. Remove the auxiliary card.
7. Disconnect the cables to the auxiliary card.
   a. Open the retention clip and slide it away from the connectors.
   b. Gently pull up the top corner of the cable latch door.
   c. Disconnect the card cables.
8. Remove the 940QSFP56 x16 adapter (Removing and replacing an expansion board).
9. Disconnect the cables to the 940QSFP56 x16 adapter.

To replace the component:

1. Thread the adapter end of the auxiliary card cables through one of the retention clips provided with the installation kit.

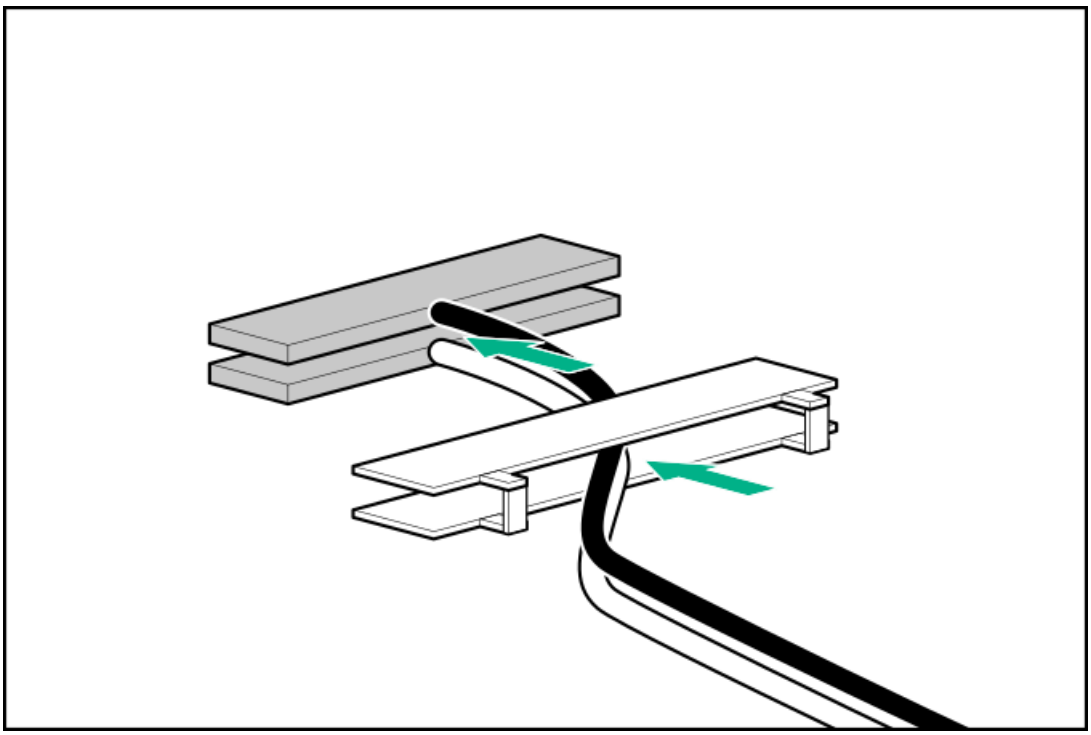

2. Connect the auxiliary card cables to the 940QSFP56 x16 adapter ports so that the golden side of the cable connector is on the top.

   The white and black cables from the auxiliary card connect to the expansion board ports labeled WHITE CABLE and BLACK CABLE, respectively.

   The cable latch door must be open when connecting the cables. Close the cable latch door after connecting the cables.

CAUTION:

The connector pins are fragile and easily damaged. To avoid damaging the connector pins, do not use excessive force when connecting the cables.

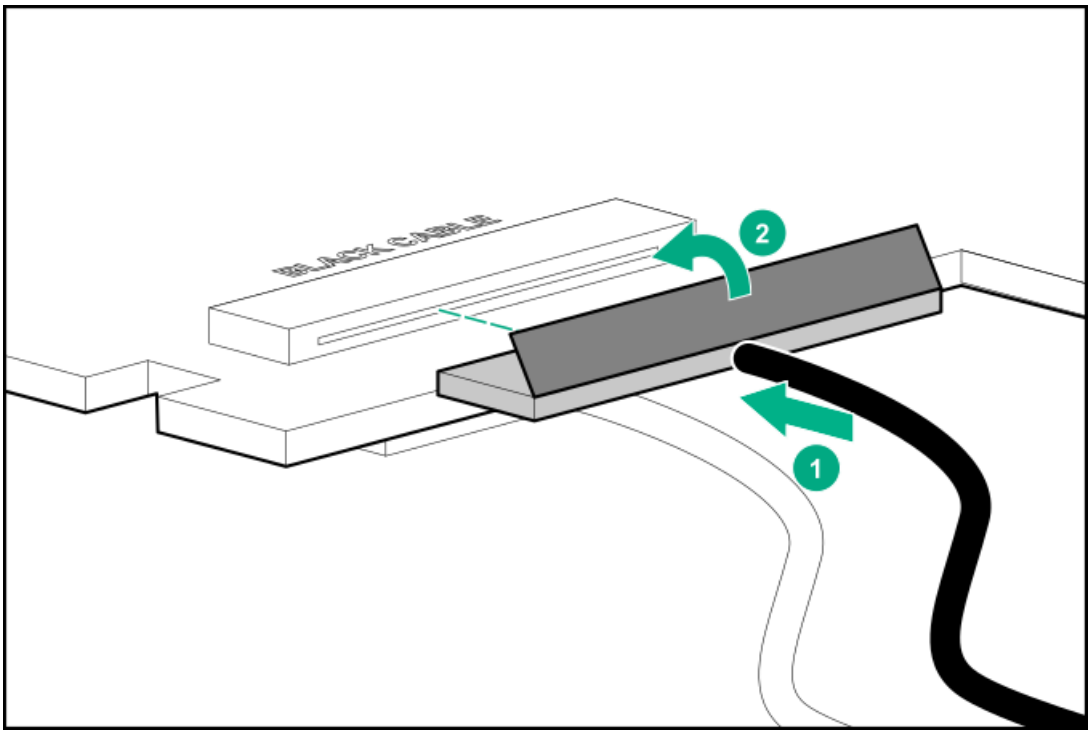

3. Install the retention clip.

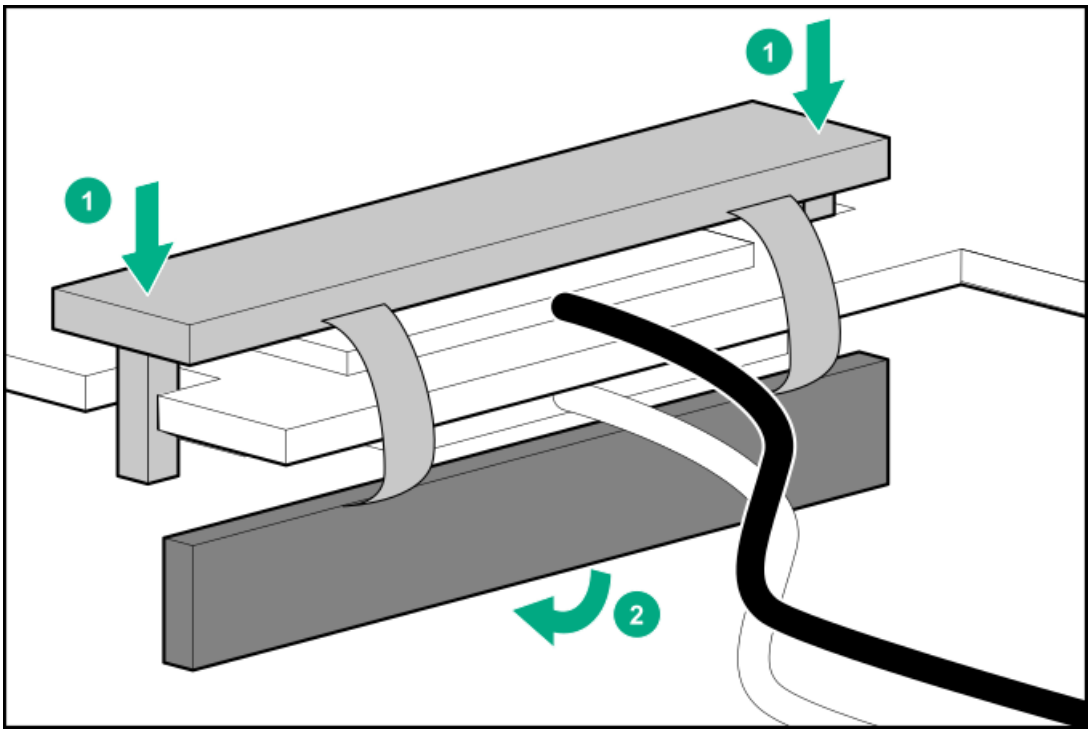

4. Thread the auxiliary cables through the second retention clip.
5. Connect the auxiliary cables to the auxiliary card.
6. Confirm that the orientation of the cables is correct.

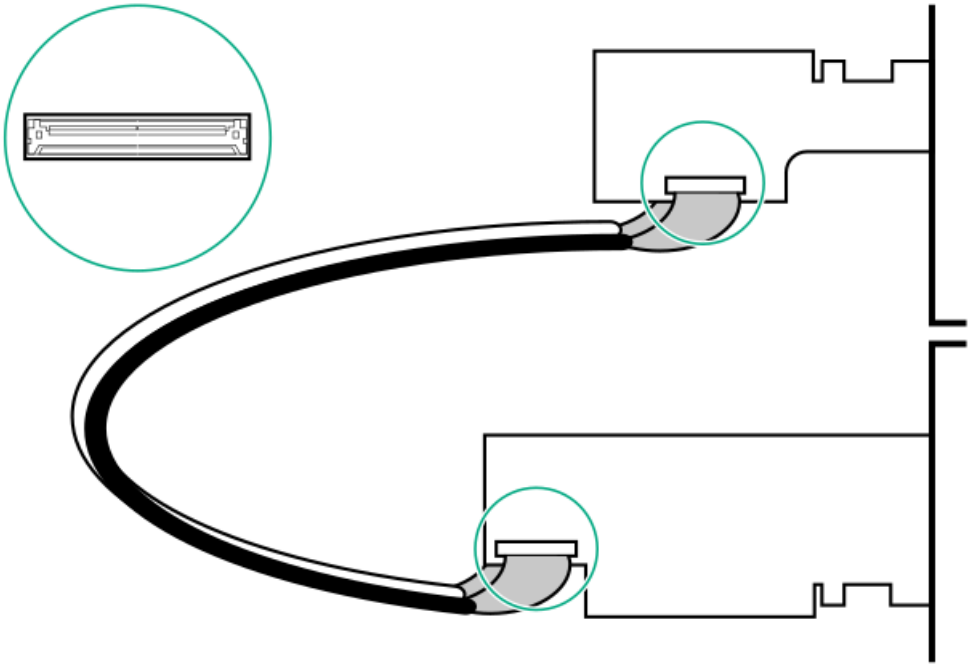

7. Install the auxiliary card into an expansion slot. The auxiliary card must be installed in the secondary riser.

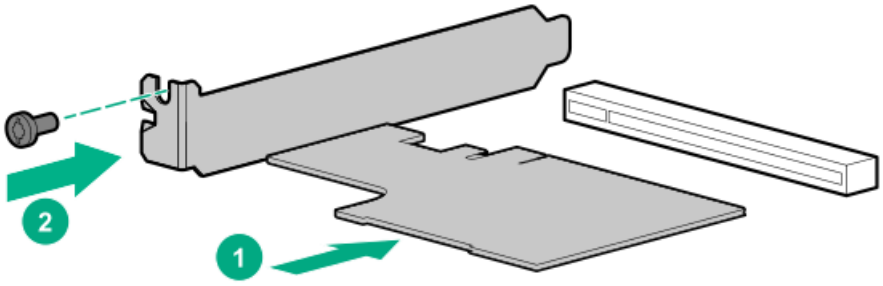

8. Install the 940QSFP56 x16 adapter into an expansion slot. The 940QSFP56 x16 adapter must be installed in the primary riser.

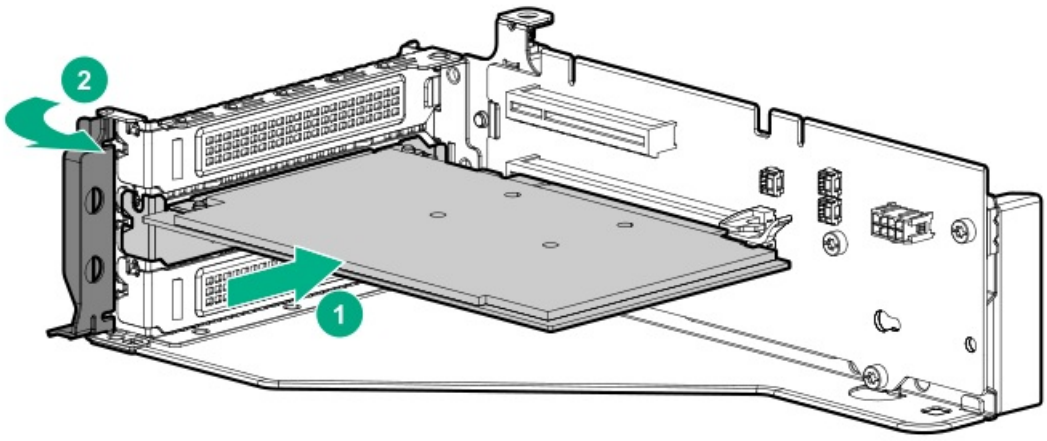

9. Install the retaining screw, if removed.
10. Install the riser cage.
11. Install the access panel.
12. Connect each power cord to the server.
13. Connect each power cord to the power source.
14. Power up the server.

Removing and replacing the HPE NS204i-p NVMe OS Boot Device option

Removing and replacing the boot device

Procedure

1. Observe the following alerts:

   CAUTION:

   The boot device and the drives installed on the boot device are not hot-pluggable. To remove the boot device, or a drive from the boot device, you must first power down the server.

   WARNING: To reduce the risk of personal injury from hot surfaces, allow the drives and the internal system components to cool before touching them.

2. Back up all server data.
3. Power down the server.
4. Remove all power:
   a. Disconnect each power cord from the power source.
   b. Disconnect each power cord from the server.
5. Do one of the following:
   - Extend the server from the rack.
   - Remove the server from the rack.
6. Remove the access panel.

   CAUTION: Do not operate the server for long periods with the access panel open or removed. Operating the server in this manner results in improper airflow and improper cooling that can lead to thermal damage.

7. Remove the PCIe riser cage.
8. Remove the boot device.

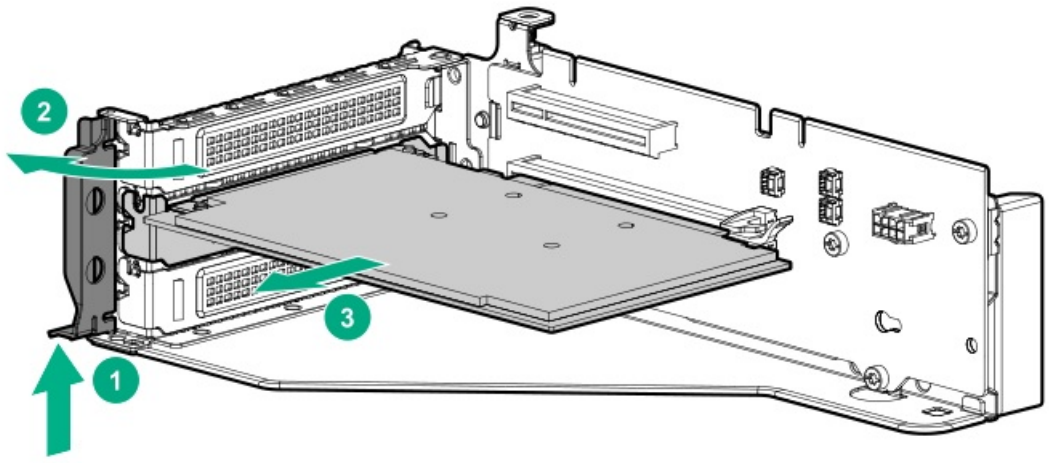

9. Remove the drives from the boot device.

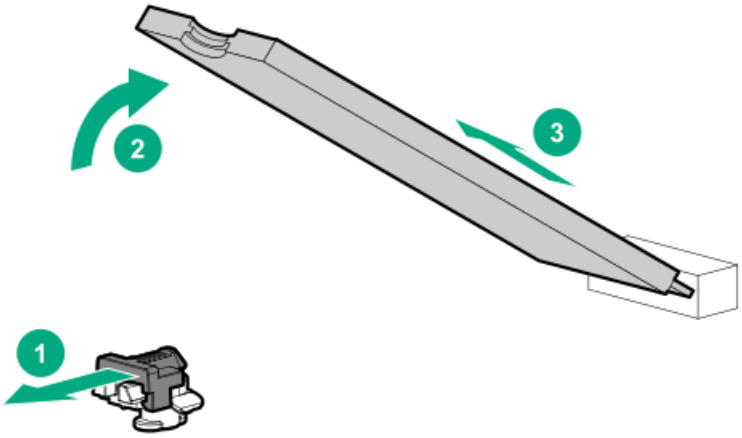

Retain these drives for installation onto the replacement boot device.

To replace the component, reverse the removal procedure.

Removing and replacing a boot device drive

The boot device supports two physical drive sizes:

- 22110 model (110mm)
- 22080 model (80mm)

Two drives of the same physical size, or one of each size (80mm and 110mm), can be installed at the same time. Depending on the replacement drive model, you might be required to relocate the M.2 drive retaining latches on the boot device.

Prerequisites

Review the boot device drive bay LEDs to determine the failed drive.

Procedure

1. Observe the following alerts:

   CAUTION:
   The boot device and the drives installed on the boot device are not hot-pluggable. To remove the boot device, or a drive from the boot device, you must first power down the server.

   WARNING: To reduce the risk of personal injury from hot surfaces, allow the drives and the internal system components to cool before touching them.

2. Back up all server data.
3. Power down the server.
4. Remove all power:
   a. Disconnect each power cord from the power source.
   b. Disconnect each power cord from the server.
5. Do one of the following:
   - Extend the server from the rack.
   - Remove the server from the rack.
6. Remove the access panel.

   CAUTION: Do not operate the server for long periods with the access panel open or removed. Operating the server in this manner results in improper airflow and improper cooling that can lead to thermal damage.

7. Remove the PCIe riser cage.
8. Remove the boot device.

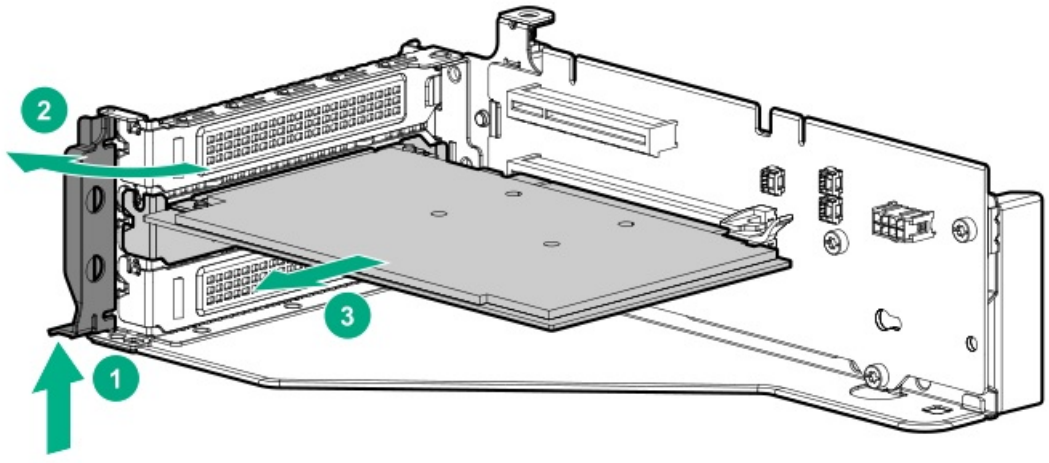

9. Remove the failed drive from the boot device.

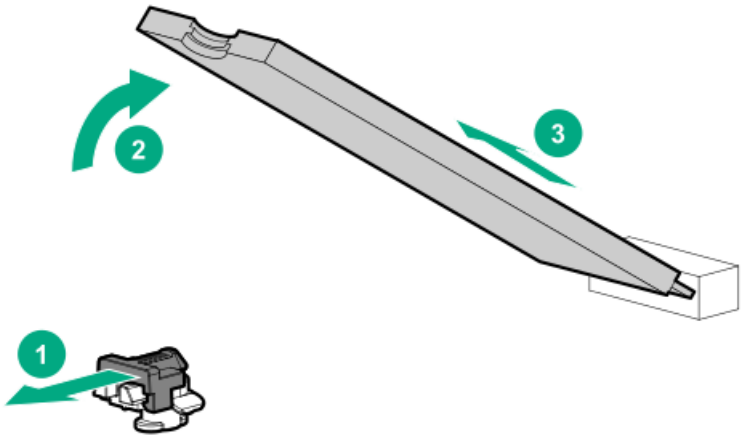

To replace the component, reverse the removal procedure.

Relocating the M.2 drive retaining latches

Procedure

1. If your spare kit includes an 80 mm replacement drive, remove the retaining latch from its current location.

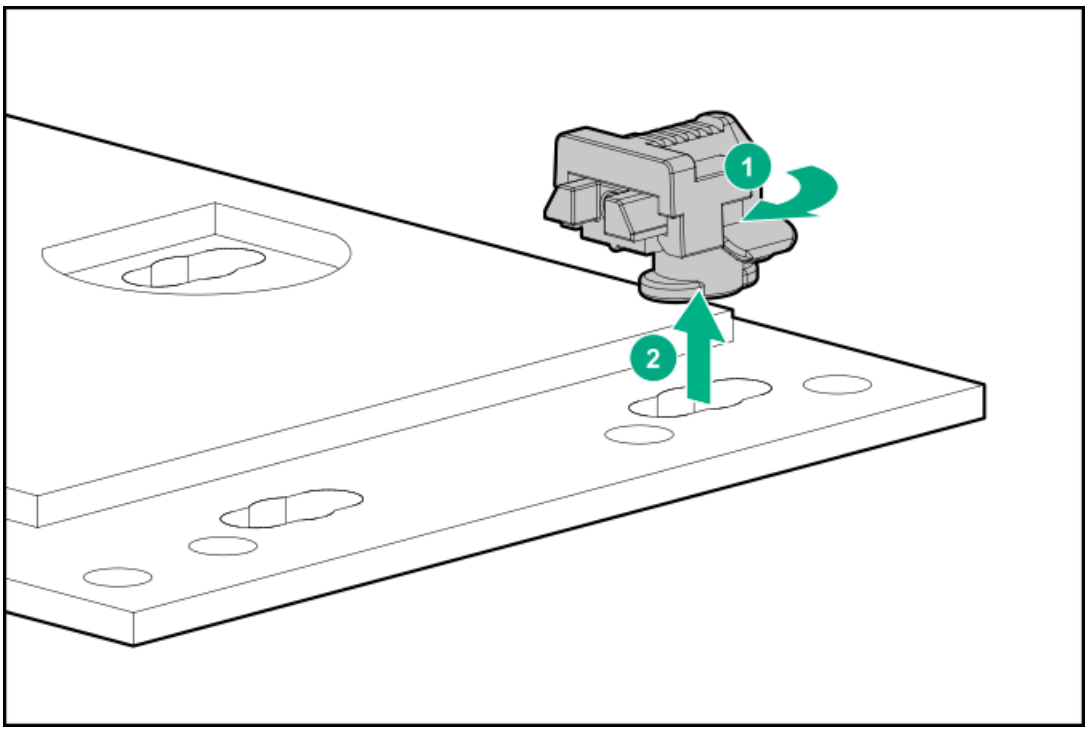

2. Install the retaining latch at the 80 mm drive location.

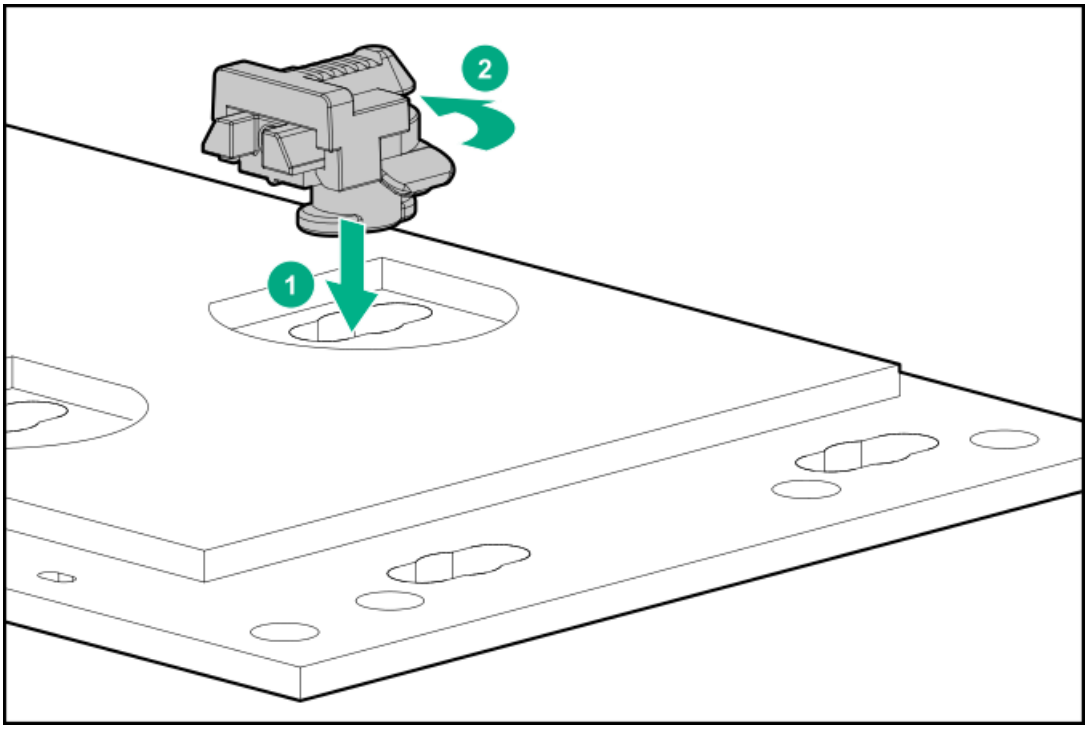

Removing and replacing the fan cage

Procedure

1. Power down the server (Power down the server).
2. Remove all power:
   a. Disconnect each power cord from the power source.
   b. Disconnect each power cord from the server.
3. Do one of the following:
   - Extend the server from the rack (Extend the server from the rack).
   - Remove the server from the rack (Remove the server from the rack).
4. Remove the access panel (Remove the access panel).
5. Remove the fan cage.

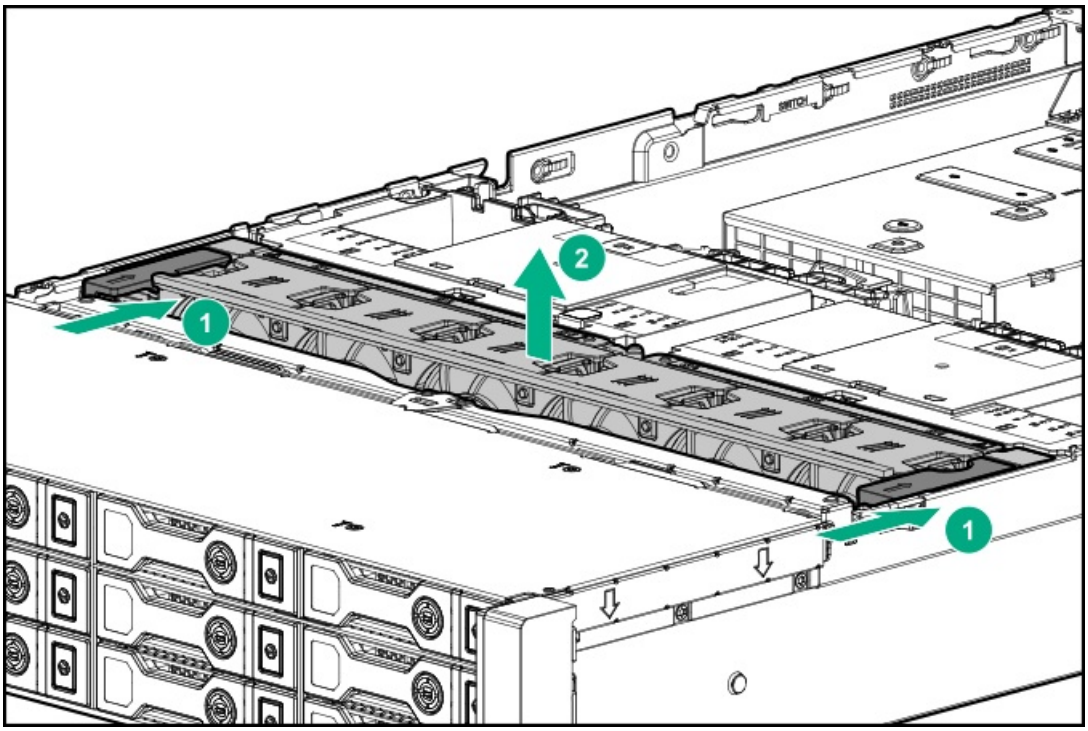

CAUTION: Do not operate the server for long periods with the access panel open or removed. Operating the server in this manner results in improper airflow and improper cooling that can lead to thermal damage.

IMPORTANT: For optimum cooling, install fans in all primary fan locations.

For more information, refer to the fan locations table in the server user guide.

To replace the component, reverse the removal procedure.

Removing and replacing the FlexibleLOM

Procedure

1. Power down the server (Power down the server).
2. Remove all power:
   a. Disconnect each power cord from the power source.
   b. Disconnect each power cord from the server.
3. Disconnect the LAN segment cables.
4. Do one of the following:
   - Extend the server from the rack (Extend the server from the rack).
   - Remove the server from the rack (Remove the server from the rack).
5. Remove the FlexibleLOM.

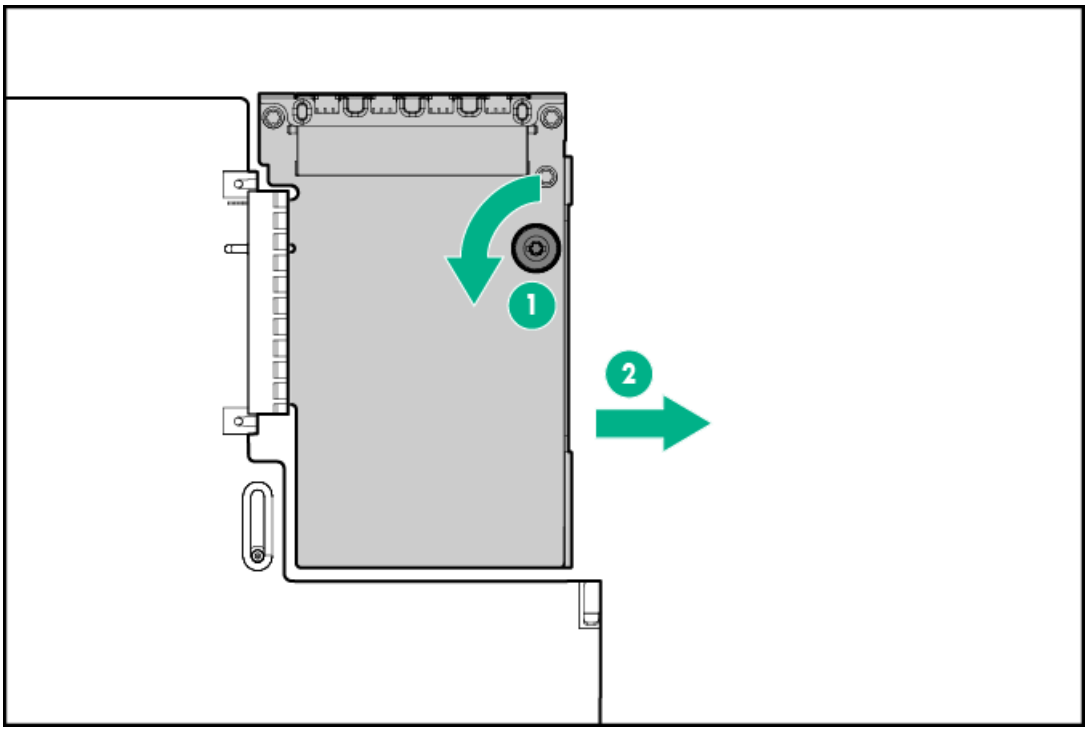

To replace the component, reverse the removal procedure.

Removing and replacing the small form factor universal media bay

Procedure

1. Power down the server (Power down the server).
2. Remove all power:
   a. Disconnect each power cord from the power source.
   b. Disconnect each power cord from the server.
3. Do one of the following:
   - Extend the server from the rack (Extend the server from the rack).
   - Remove the server from the rack (Remove the server from the rack .
4. Remove the access panel (Remove the access panel).
5. Remove all hot-plug hard drives (Removing and replacing drives).
6. Remove the fan cage (Removing and replacing the fan cage) .
7. Disconnect all cables from the universal media bay.
8. Remove the universal media bay.

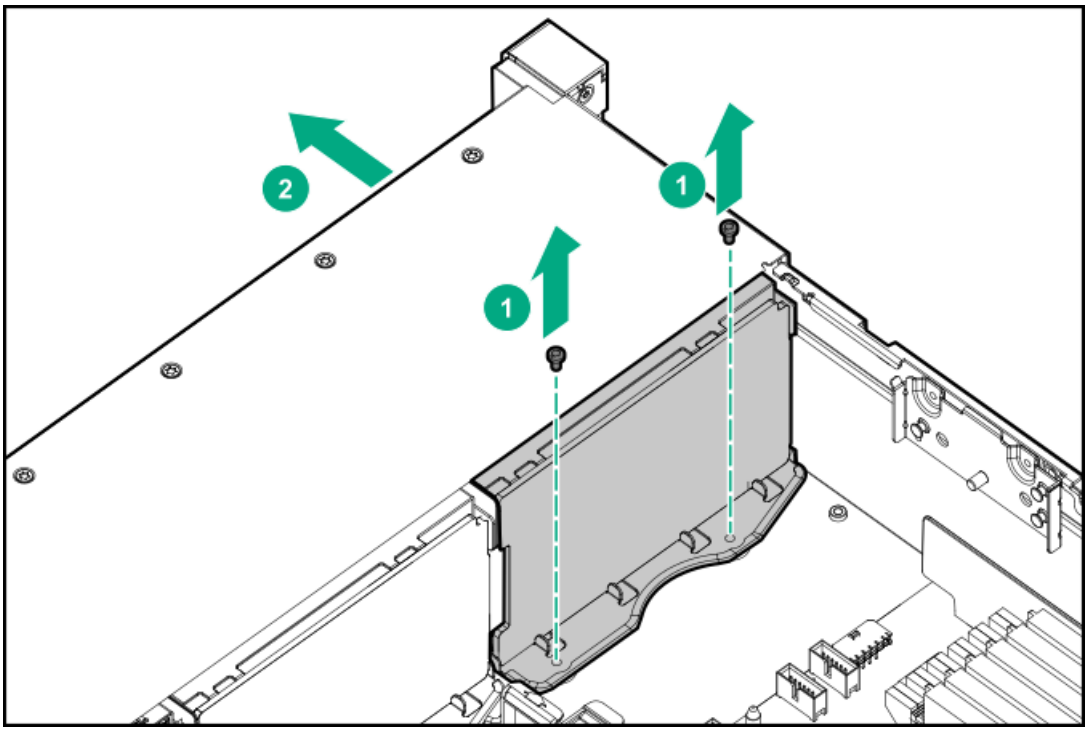

To replace the component, reverse the removal procedure.

Removing and replacing the LFF power switch module

Procedure

1. Power down the server (Power down the server).
2. Remove all power:
   a. Disconnect each power cord from the power source.
   b. Disconnect each power cord from the server.
3. Do one of the following:
   - Extend the server from the rack (Extend the server from the rack).
   - Remove the server from the rack (Remove the server from the rack).
4. Remove the access panel (Remove the access panel).
5. Remove all hot-plug hard drives (Removing and replacing drives).
6. Remove the fan cage (Removing and replacing the fan cage).
7. Disconnect all cables connecting the power switch module to the system board and other components.
8. Feeding the cables through the front of the server, remove the power switch module.

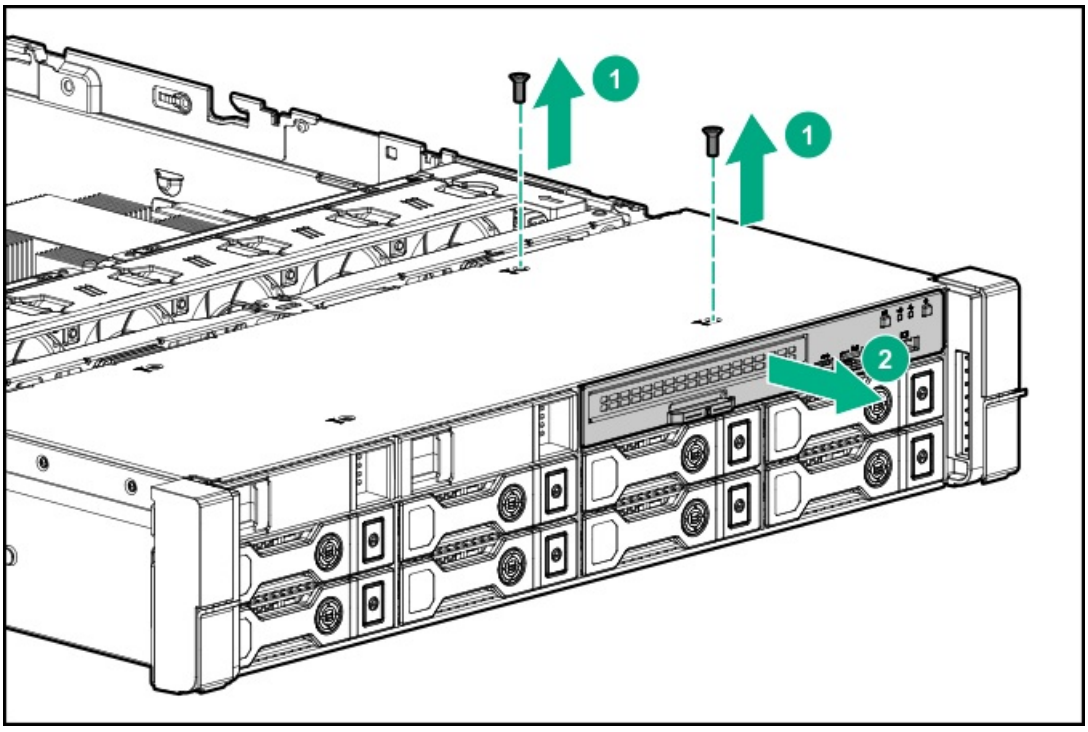

To replace the component, reverse the removal procedure.

Removing and replacing the SFF optical drive

Procedure

1. Power down the server (Power down the server).
2. Remove all power:
   a. Disconnect each power cord from the power source.
   b. Disconnect each power cord from the server.
3. Do one of the following:
   - Extend the server from the rack (Extend the server from the rack).
   - Remove the server from the rack (Remove the server from the rack).
4. Remove the access panel (Remove the access panel).
5. Remove the fan cage (Removing and replacing the fan cage).
6. Disconnect all cables from the SFF universal media bay.
7. Remove the SFF universal media bay (Removing and replacing the small form factor universal media bay).
8. Remove the optical drive.

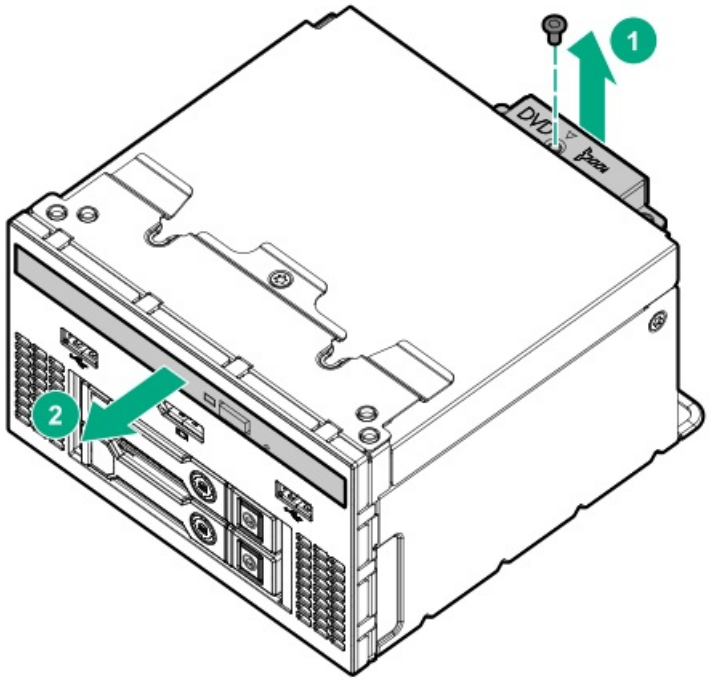

9. Remove the optical drive bracket, for use with the replacement optical drive.

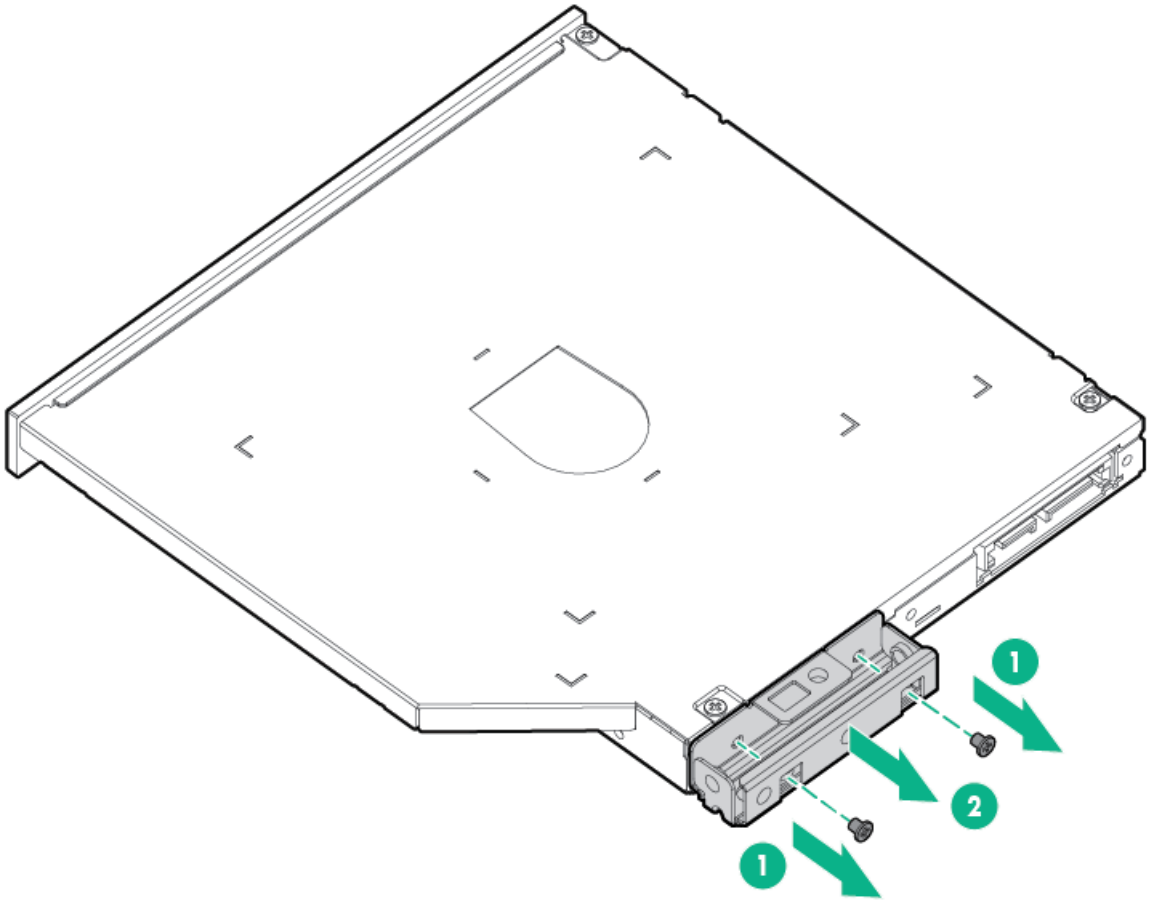

10. Before replacing the component, install the optical drive bracket, retained from the optical drive you are replacing.

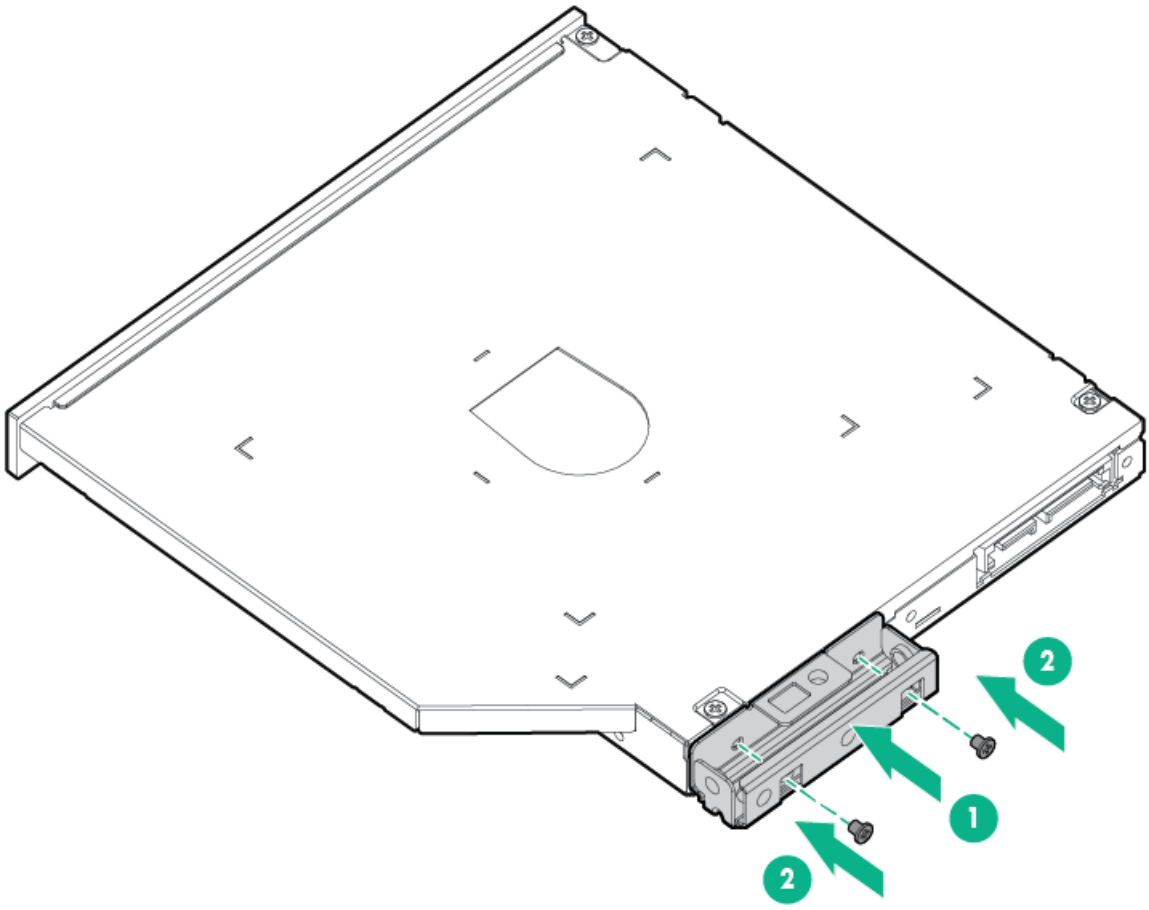

To replace the component, reverse the removal procedure.

Removing and replacing the LFF optical drive

Procedure

1. Power down the server (Power down the server).
2. Remove all power:
   a. Disconnect each power cord from the power source.
   b. Disconnect each power cord from the server.
3. Do one of the following:
   - Extend the server from the rack (Extend the server from the rack).
   - Remove the server from the rack (Remove the server from the rack).
4. Remove the access panel (Remove the access panel).
5. Remove the fan cage (Removing and replacing the fan cage).
6. Disconnect all cables from the LFF power switch module.
7. Remove the LFF power switch module (Removing and replacing the LFF power switch module).
8. Remove the optical drive.

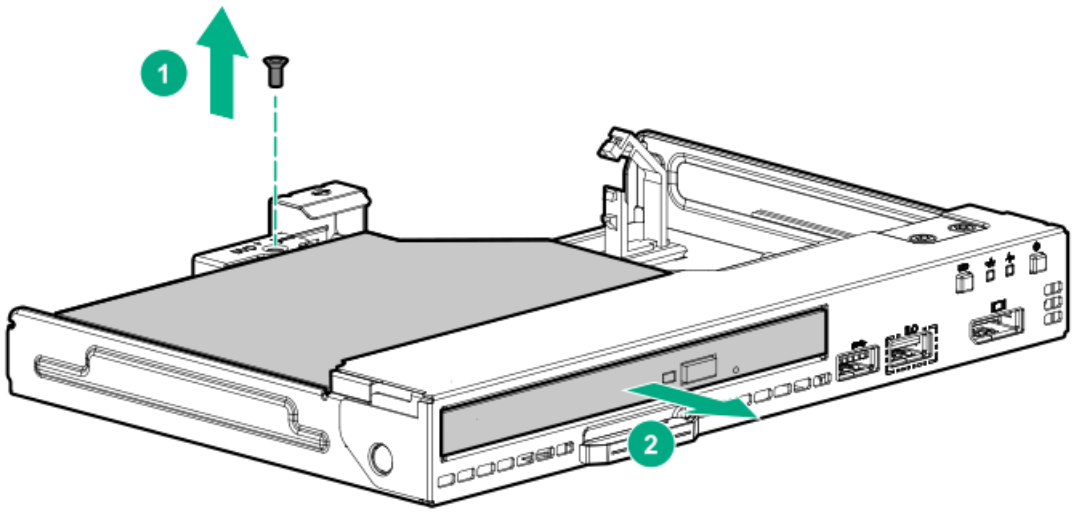

To replace the component, reverse the removal procedure.

Removing and replacing the 8 SFF drive cage

Procedure

1. Power down the server (Power down the server).
2. Remove all power:
   a. Disconnect each power cord from the power source.
   b. Disconnect each power cord from the server.
3. Do one of the following:
   - Extend the server from the rack (Extend the server from the rack).
   - Remove the server from the rack (Remove the server from the rack).
4. Remove the access panel (Remove the access panel).
5. Remove all drives (Removing and replacing drives).
6. Remove the fan cage (Removing and replacing the fan cage).
7. Disconnect all cables from the drive backplane.
8. Remove the drive cage.

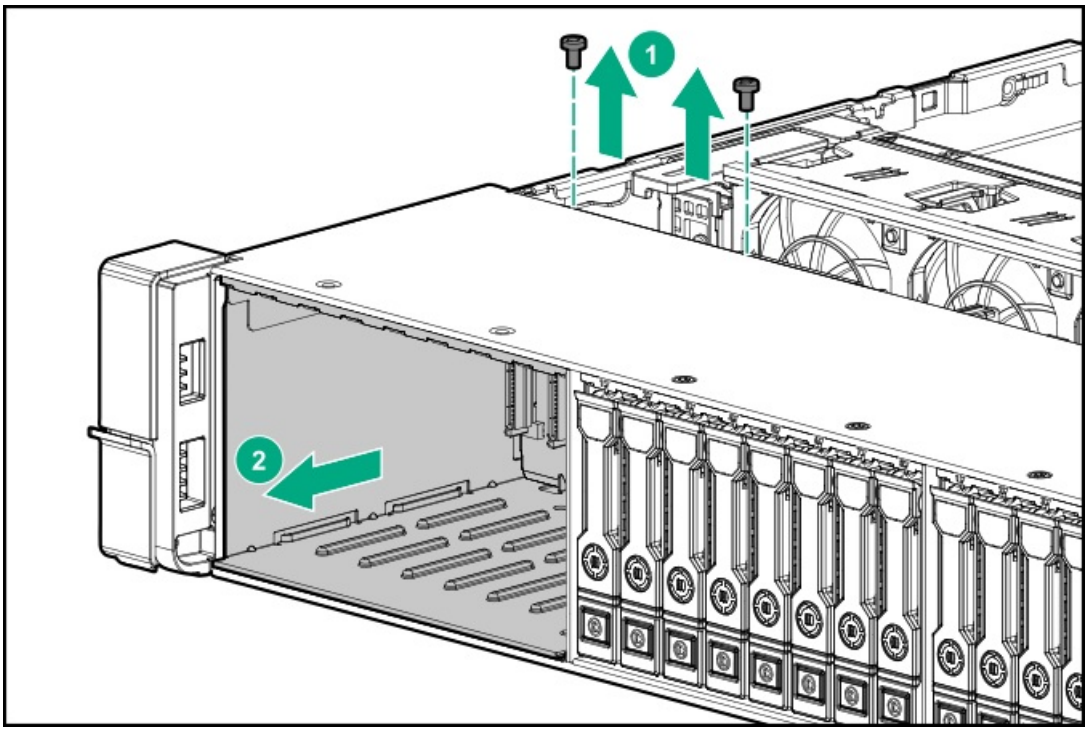

To replace the component, reverse the removal procedure.

Removing and replacing the 8 SFF drive backplane

Procedure

1. Power down the server (Power down the server).
2. Remove all power:
   a. Disconnect each power cord from the power source.
   b. Disconnect each power cord from the server.
3. Do one of the following:
   - Extend the server from the rack (Extend the server from the rack).
   - Remove the server from the rack (Remove the server from the rack).
4. Remove the access panel (Remove the access panel).
5. Remove the fan cage (Removing and replacing the fan cage).
6. Remove all drives (Removing and replacing drives).
7. Remove the 8 SFF drive cage (Removing and replacing the 8 SFF drive cage).
8. Remove the drive backplane.

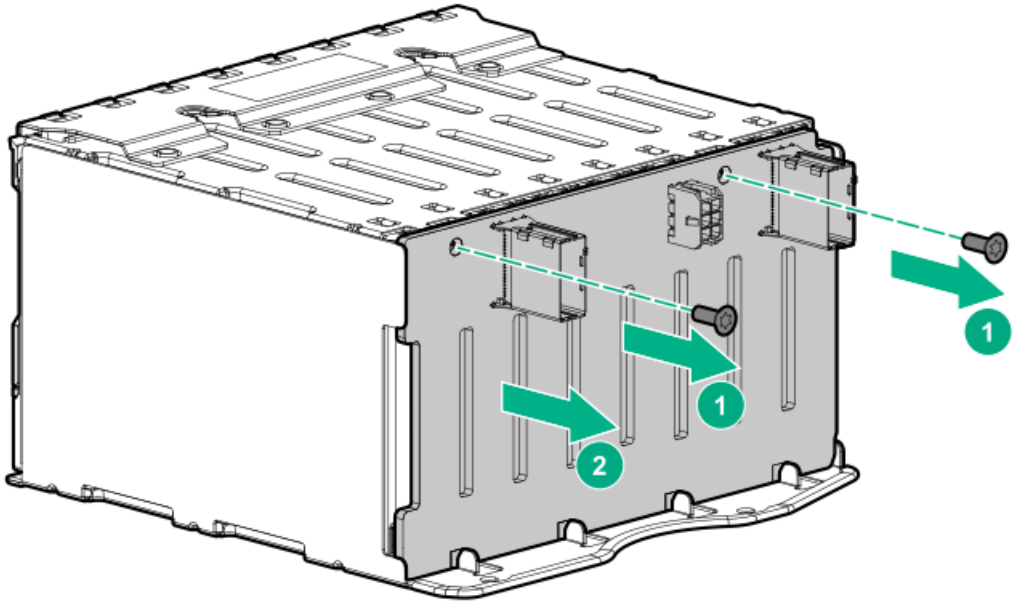

To replace the component, reverse the removal procedure.

Removing and replacing the 2 SFF front drive cage

Procedure

1. Power down the server (Power down the server).
2. Remove all power:
   a. Disconnect each power cord from the power source.
   b. Disconnect each power cord from the server.
3. Do one of the following:
   - Extend the server from the rack (Extend the server from the rack).
   - Remove the server from the rack (Remove the server from the rack).
4. Remove the access panel (Remove the access panel).
5. Remove all drives (Removing and replacing drives).
6. Disconnect all cables from the drive backplane.
7. Remove the drive cage.

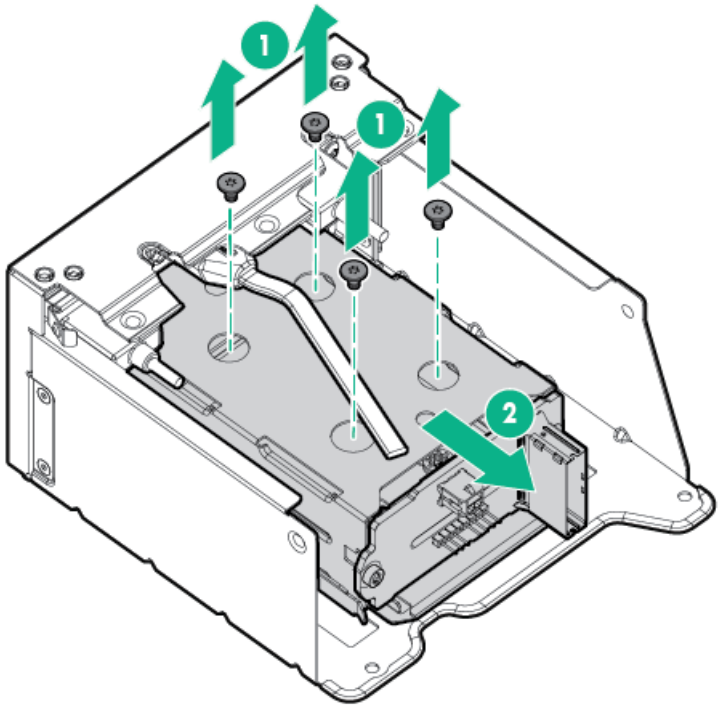

To replace the component, reverse the removal procedure.

Removing and replacing the 2 SFF rear drive bay and riser cage

Procedure

1. Power down the server (Power down the server).
2. Remove all power:
   a. Disconnect each power cord from the power source.
   b. Disconnect each power cord from the server.
3. Do one of the following:
   - Extend the server from the rack (Extend the server from the rack).
   - Remove the server from the rack (Remove the server from the rack).
4. Remove the access panel (Remove the access panel).
5. Remove all drives (Removing and replacing drives).
6. Disconnect all cables from the drive backplane.
7. Remove the drive cage.

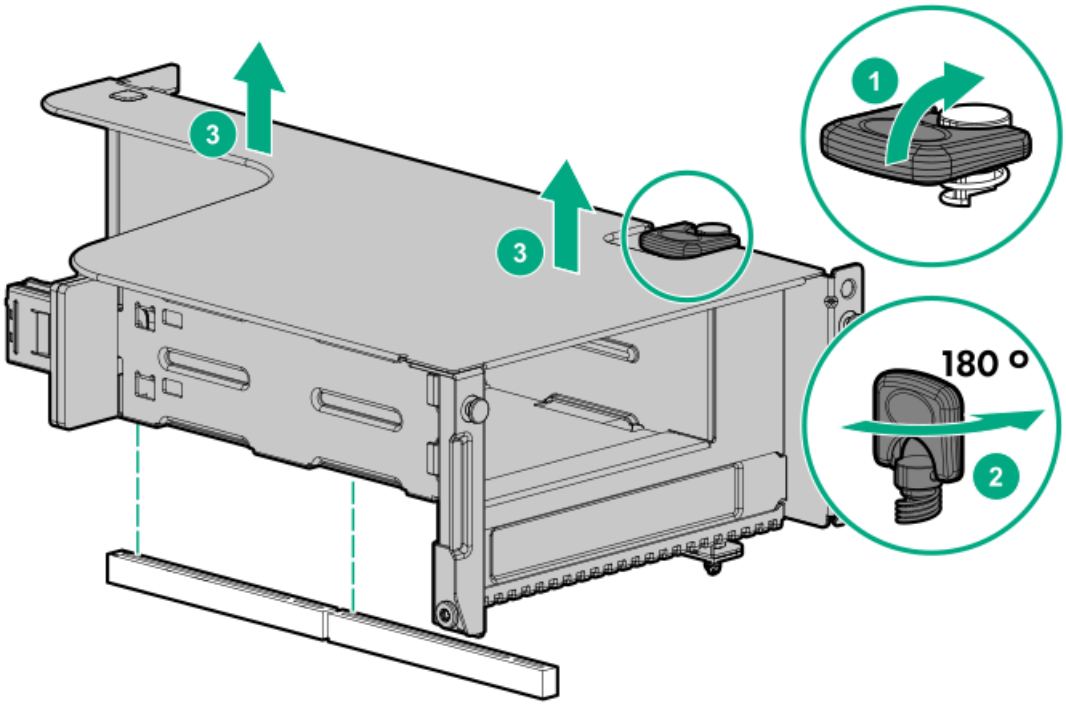

To replace the component, reverse the removal procedure.

Removing and replacing the 2 SFF drive cage

Procedure

1. Power down the server (Power down the server).
2. Remove all power:
   a. Disconnect each power cord from the power source.
   b. Disconnect each power cord from the server.
3. Do one of the following:
   - Extend the server from the rack (Extend the server from the rack).
   - Remove the server from the rack (Remove the server from the rack).
4. Remove the access panel (Remove the access panel).
5. Remove all drives (Removing and replacing drives).
6. Disconnect all cables from the drive backplane.
7. Remove the drive cage.

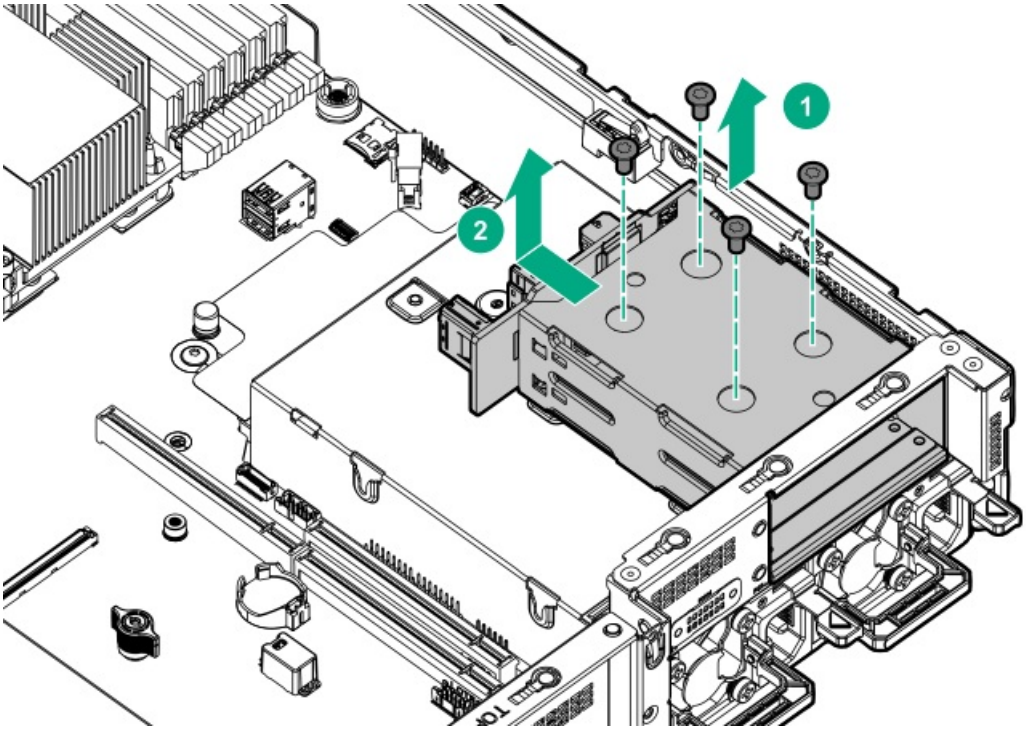

To replace the component, reverse the removal procedure.

Removing and replacing the 2 SFF rear drive backplane

Procedure

1. Power down the server (Power down the server).
2. Remove all power:
   a. Disconnect each power cord from the power source.
   b. Disconnect each power cord from the server.
3. Do one of the following:
   - Extend the server from the rack (Extend the server from the rack).
   - Remove the server from the rack (Remove the server from the rack).
4. Remove the access panel (Remove the access panel).
5. Remove the fan cage (Removing and replacing the fan cage).
6. Remove all drives (Removing and replacing drives).
7. Remove the 2 SFF rear drive cage (Removing and replacing the 2 SFF drive cage).
8. Remove the drive backplane.

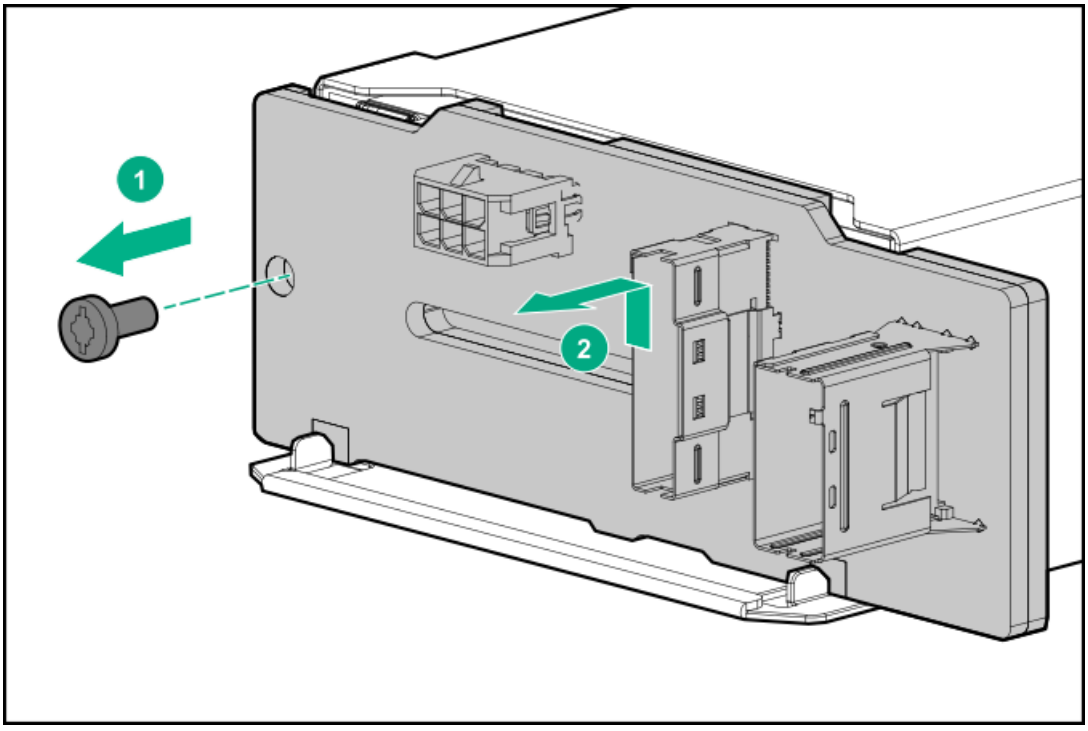

To replace the component, reverse the removal procedure.

Removing and replacing a 4 LFF midplane cage

Procedure

1. Power down the server (Power down the server).
2. Remove all power:
   a. Disconnect each power cord from the power source.
   b. Disconnect each power cord from the server.
3. Do one of the following:
   - Extend the server from the rack (Extend the server from the rack).
   - Remove the server from the rack (Remove the server from the rack).
4. Remove the access panel (Remove the access panel).
5. If installed, remove all riser cages:
   - Primary or secondary PCIe riser cage (Removing and replacing the primary or secondary PCIe riser cages)
   - Tertiary PCIe riser cage (Removing and replacing the tertiary PCIe riser cage)
6. Disconnect the power and cables from the drive cage.
7. Raise the blue tabs on the drive tray and lift the drive cage to a 15 degree angle.
8. Pull the plunger pin to disengage it.
9. Remove all drives (Removing and replacing drives).
10. Using both hands, remove the drive cage from the server.

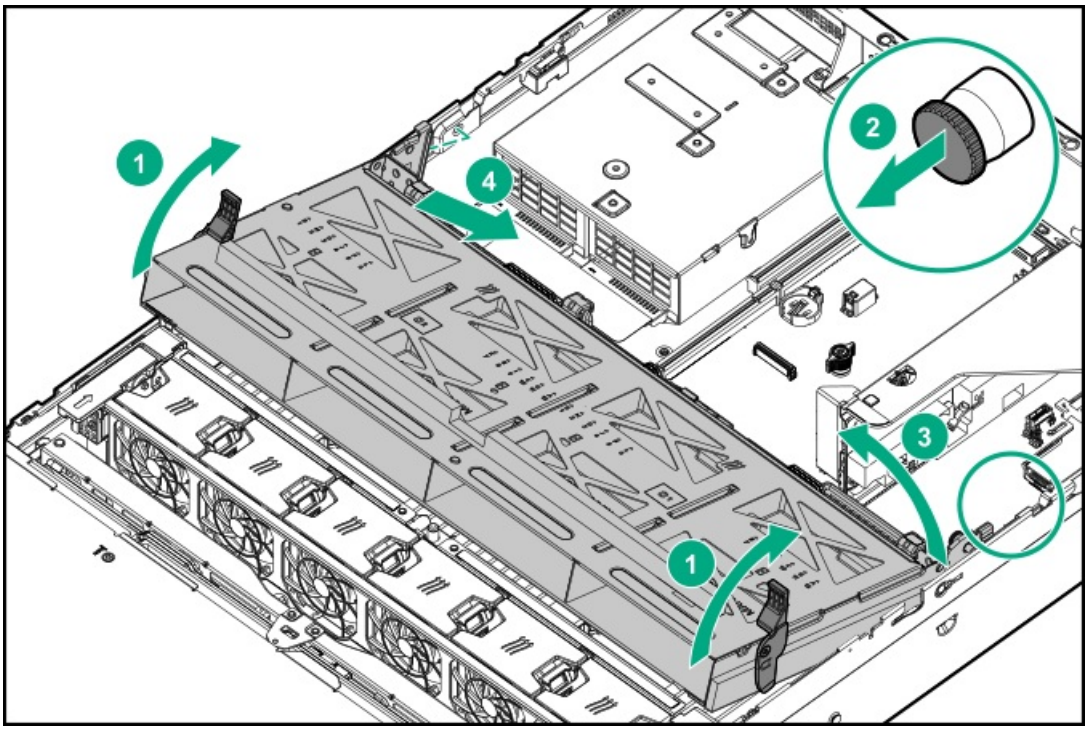

Removing and replacing a 3-bay LFF rear drive cage

Procedure

1. Power down the server (Power down the server).
2. Remove all power:
   a. Disconnect each power cord from the power source.
   b. Disconnect each power cord from the server.
3. Do one of the following:
   - Extend the server from the rack (Extend the server from the rack).
   - Remove the server from the rack (Remove the server from the rack).
4. Remove the access panel (Remove the access panel).
5. Remove all drives (Removing and replacing drives).
6. Remove the drive cage.

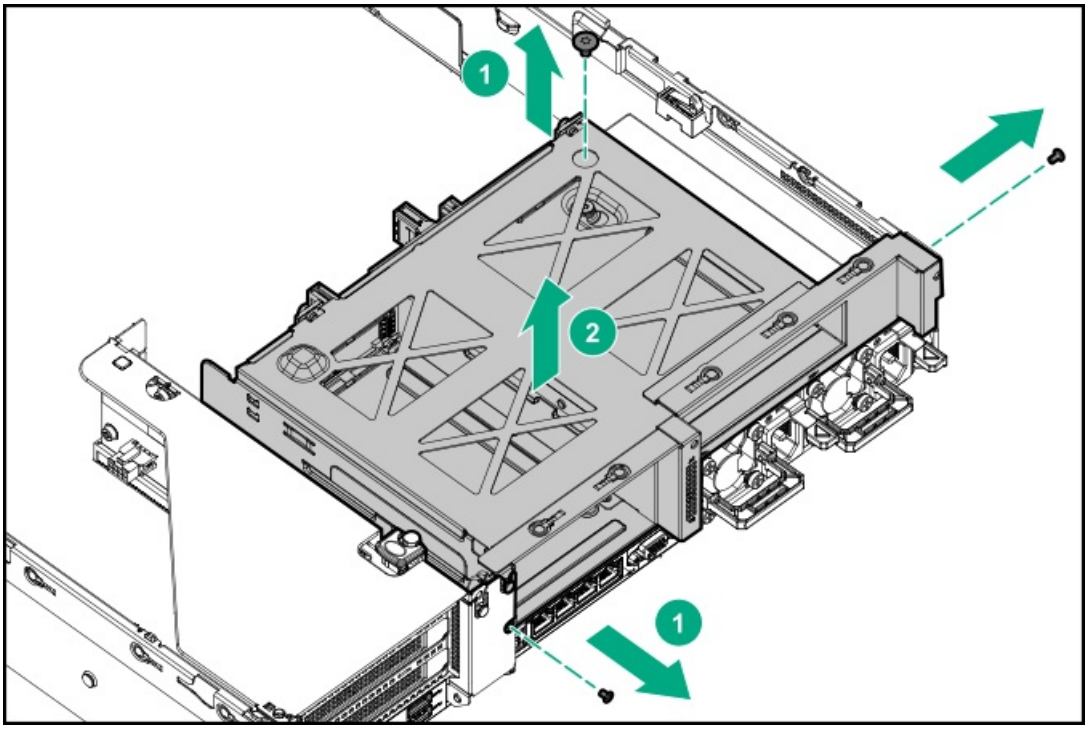

To replace the component, reverse the removal procedure.

Removing and replacing the LFF backplane assembly

Procedure

1. Power down the server (Power down the server).
2. Remove all power:
   a. Disconnect each power cord from the power source.
   b. Disconnect each power cord from the server.
3. Do one of the following:
   - Extend the server from the rack (Extend the server from the rack).
   - Remove the server from the rack (Remove the server from the rack).
4. Remove the access panel (Remove the access panel).
5. Remove the fan cage (Removing and replacing the fan cage).
6. Remove all drives (Removing and replacing drives).
7. Disconnect all cables connected the LFF backplane assembly.
8. Remove the LFF backplane assembly.

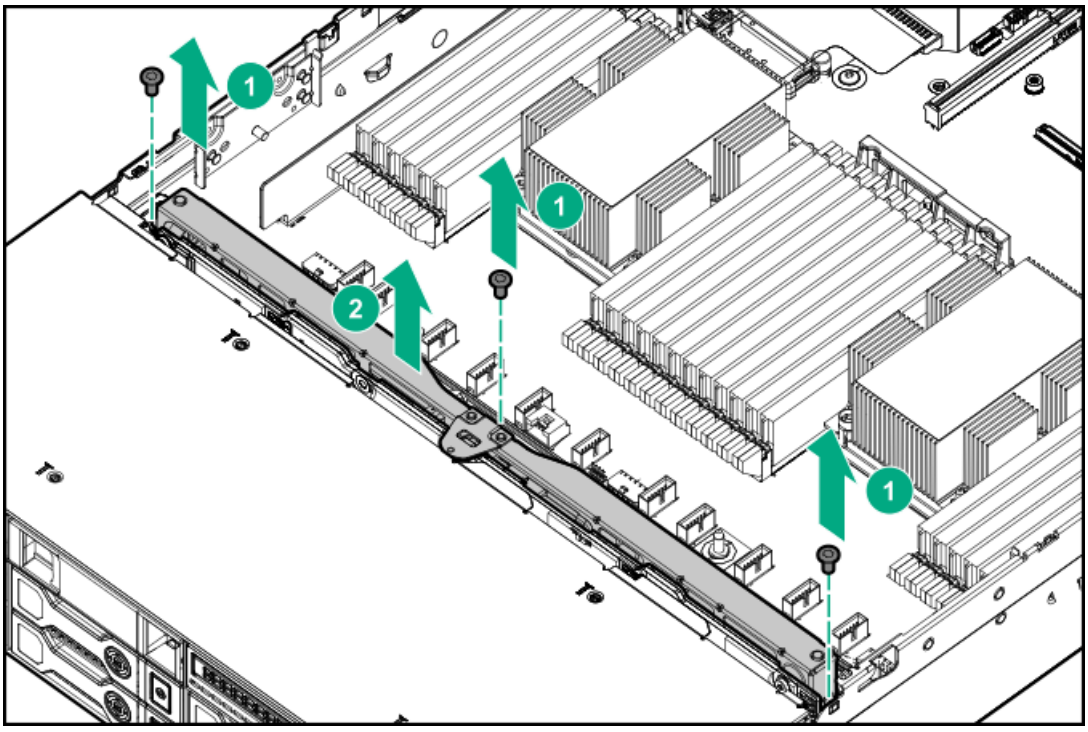

To replace the component, reverse the removal procedure.

Removing and replacing a front LFF drive backplane

Procedure

1. Power down the server(Power down the server).
2. Remove all power:
   a. Disconnect each power cord from the power source.
   b. Disconnect each power cord from the server.
3. Do one of the following:
   - Extend the server from the rack (Extend the server from the rack).
   - Remove the server from the rack (Remove the server from the rack).
4. Remove the access panel (Remove the access panel).
5. Remove the fan cage (Removing and replacing the fan cage).
6. Remove all drives (Removing and replacing drives).
7. Disconnect all cables connected the LFF backplane assembly.
8. Remove the LFF backplane assembly.

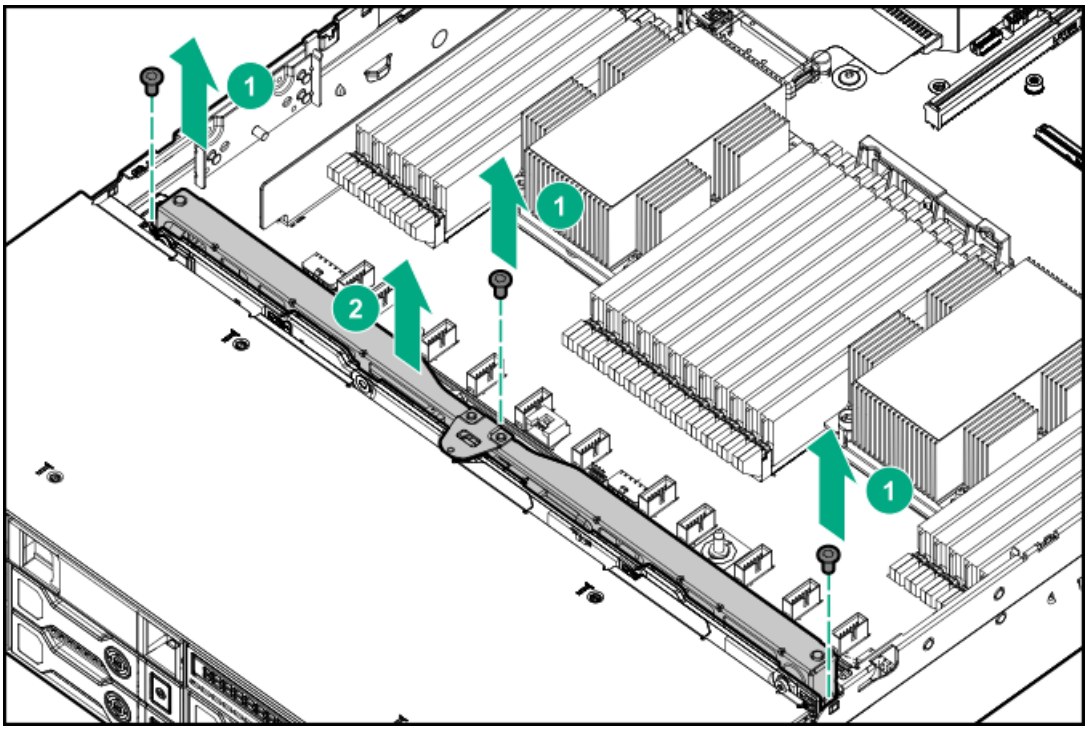

9. Remove the drive backplane.

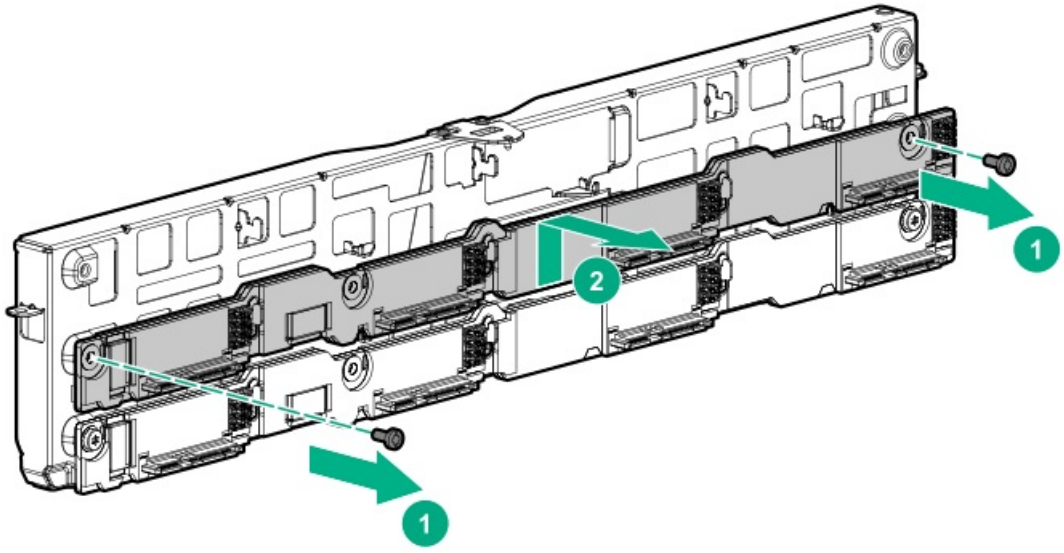

To replace the component, reverse the removal procedure.

Removing and replacing the 3 LFF rear drive backplane

Procedure

1. Power down the server (Power down the server).
2. Remove all power:
   a. Disconnect each power cord from the power source.
   b. Disconnect each power cord from the server.
3. Do one of the following:
   - Extend the server from the rack (Extend the server from the rack).
   - Remove the server from the rack (Remove the server from the rack).
4. Remove the access panel (Remove the access panel).
5. Remove the fan cage (Removing and replacing the fan cage).
6. Remove all drives (Removing and replacing drives).
7. Remove the drive backplane.

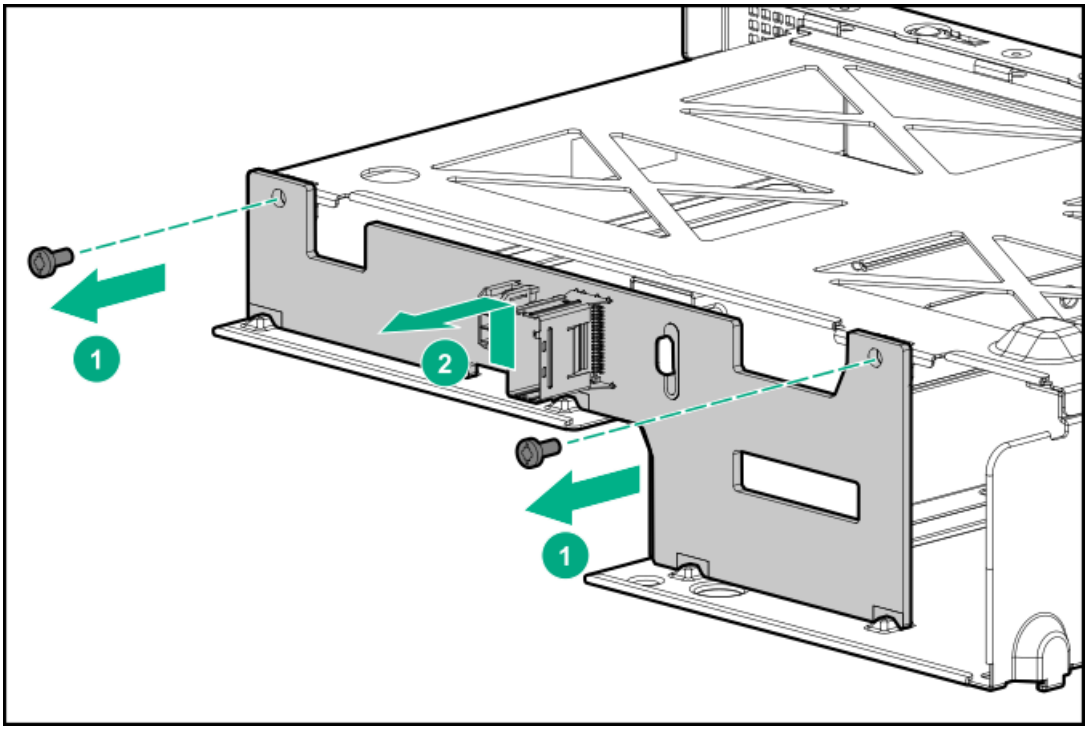

To replace the component, reverse the removal procedure.

Removing and replacing a rear serial port interface (primary/secondary)

Procedure

1. Power down the server (Power down the server).
2. Remove all power:
   a. Disconnect each power cord from the power source.
   b. Disconnect each power cord from the server.
3. Do one of the following:
   - Extend the server from the rack (Extend the server from the rack).
   - Remove the server from the rack (Remove the server from the rack).
4. Remove the access panel (Remove the access panel).
5. Using a T-10 Torx screwdriver, remove the screws securing the serial port. Then, disconnect and remove the serial cable.

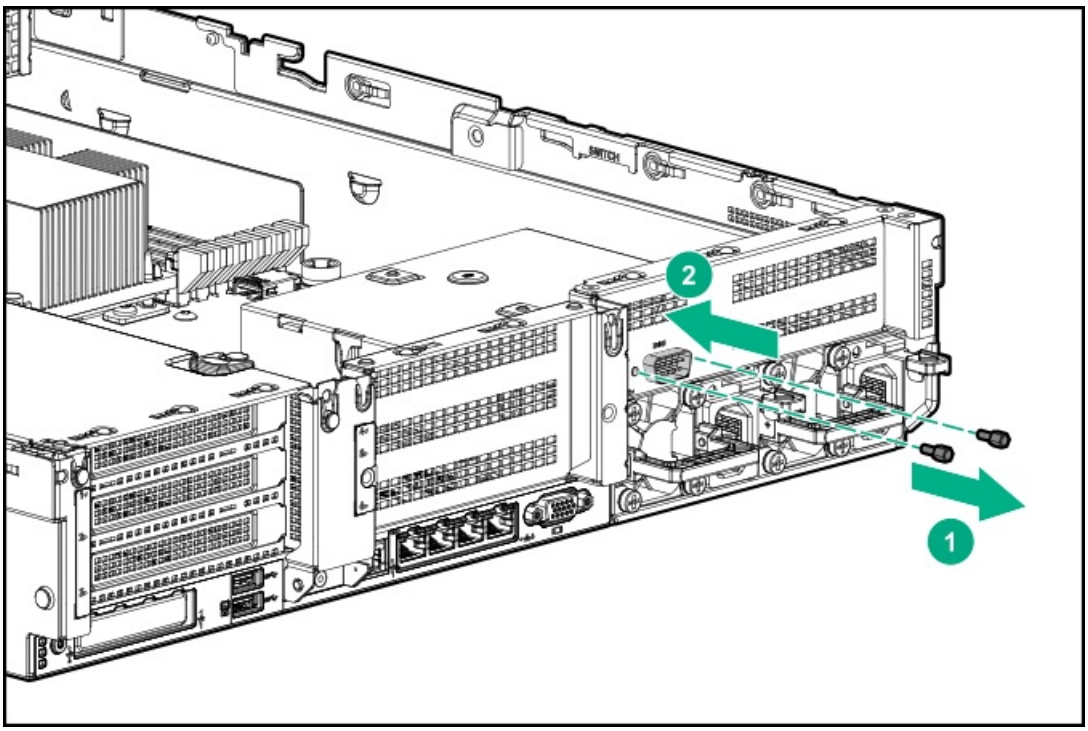

To replace the component, reverse the removal procedure.

Removing and replacing a rear serial port interface (tertiary riser)

Procedure

1. Power down the server (Power down the server).
2. Remove all power:
   a. Disconnect each power cord from the power source.
   b. Disconnect each power cord from the server.
3. Do one of the following:
   - Extend the server from the rack (Extend the server from the rack).
   - Remove the server from the rack (Remove the server from the rack).
4. Remove the access panel (Remove the access panel).
5. Disconnect the cable.
6. Remove the tertiary riser cage.
7. Using a T-10 Torx screwdriver, remove the serial port interface.

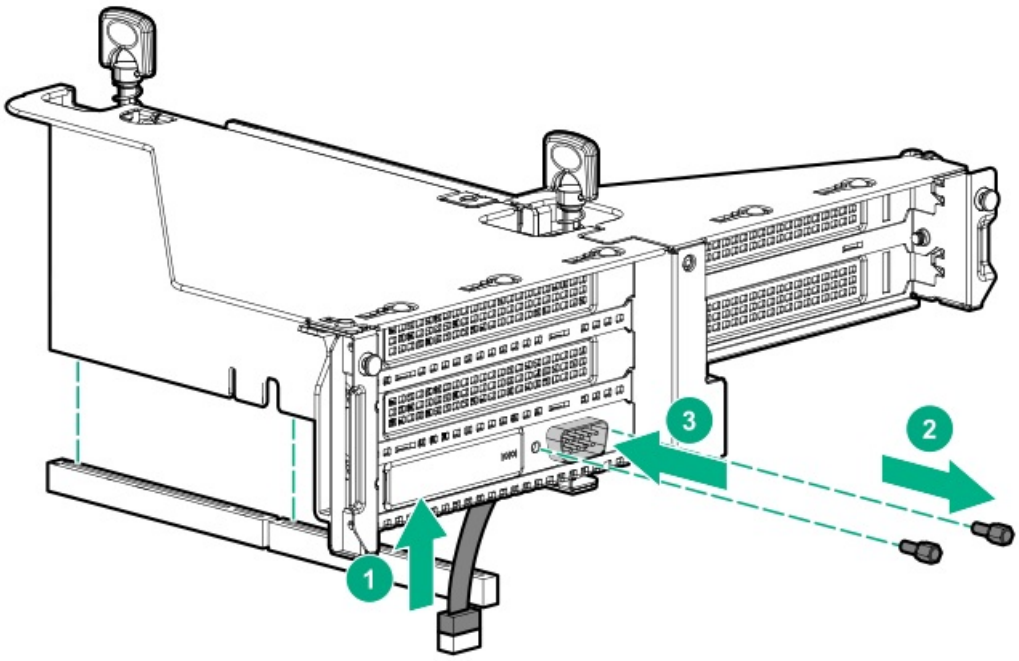

To replace the component:

8. Install the serial port interface.
9. Connect the cable.
10. Install the riser.

Removing and replacing an SFF power switch module

Procedure

1. Power down the server (Power down the server).
2. Do one of the following:
   - Extend the server from the rack (Extend the server from the rack).
   - Remove the server from the rack (Remove the server from the rack).
3. Remove the access panel (Remove the access panel).
4. Disconnect cables from the power switch module.
5. Remove the power switch module.

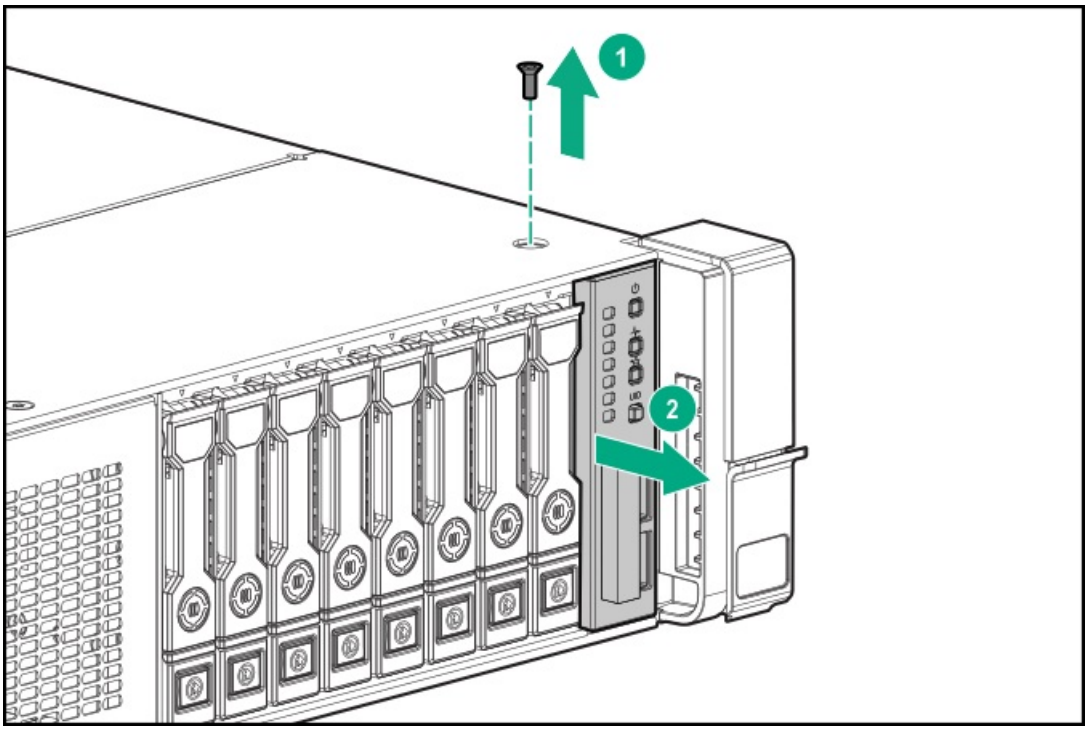

To replace the component, reverse the removal procedure

Removing and replacing an LFF chassis ear with power/UID

Procedure

1. Power down the server (Power down the server).
2. Remove all power:
   a. Disconnect each power cord from the power source.
   b. Disconnect each power cord from the server.
3. Do one of the following:
   - Extend the server from the rack (Extend the server from the rack).
   - Remove the server from the rack (Remove the server from the rack).
4. Remove the access panel (Remove the access panel).
5. Disconnect the cable.

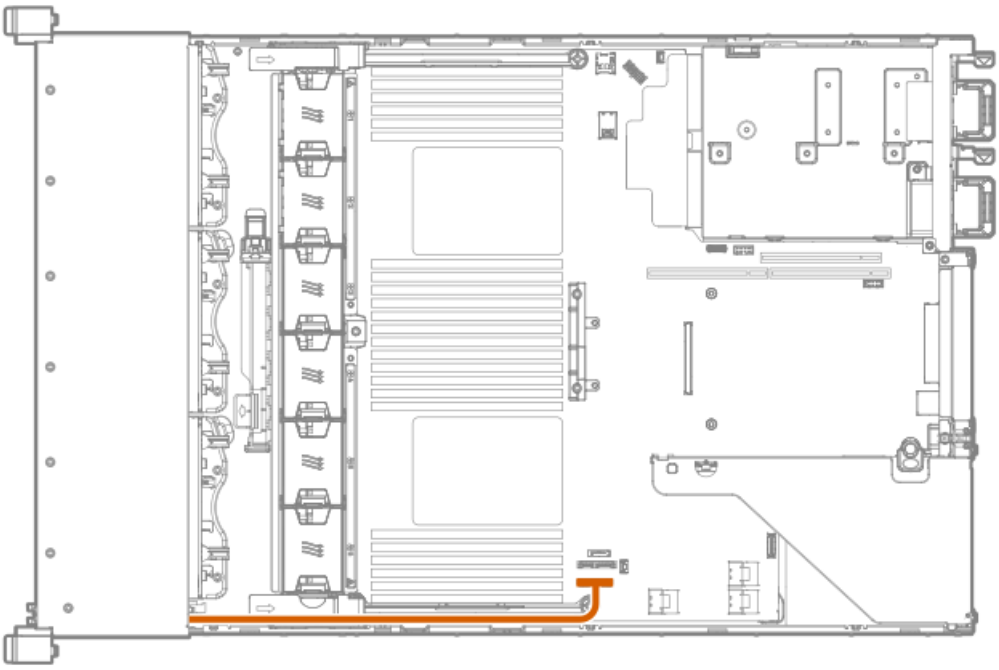

6. Remove the cable protection panel.

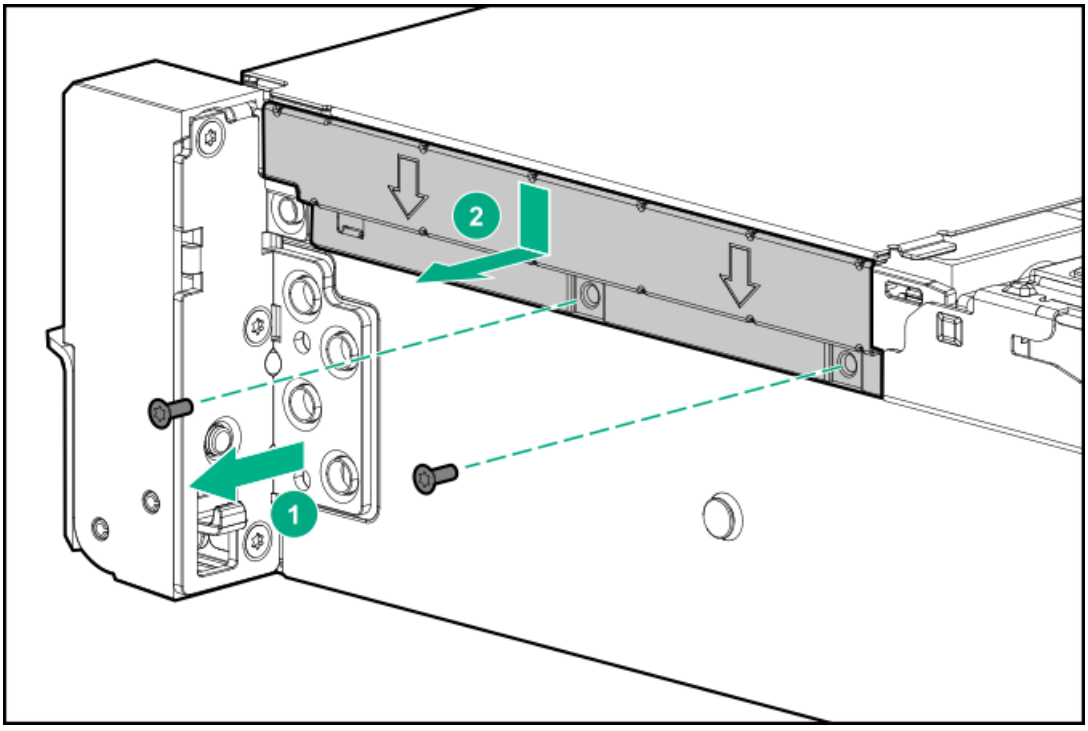

7. Remove the chassis ear.

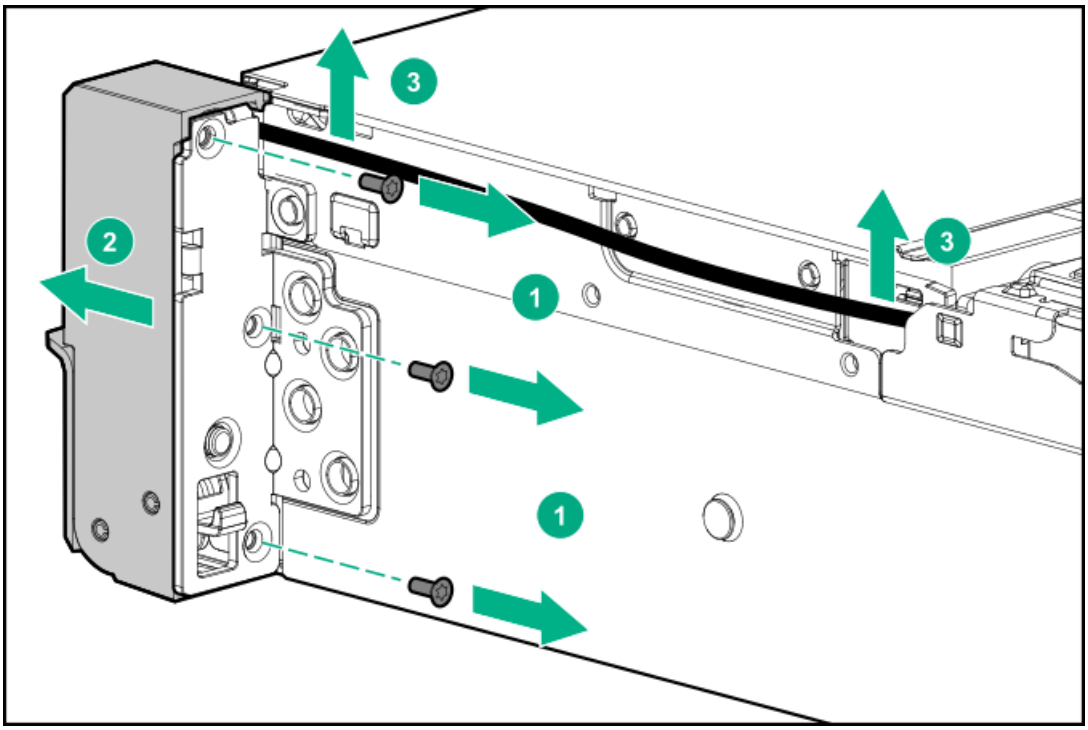

To replace the component, reverse the removal procedure.

Removing and replacing an SFF standard chassis ear

Procedure

1. Power down the server (Power down the server).
2. Remove all power:
   a. Disconnect each power cord from the power source.
   b. Disconnect each power cord from the server.
3. Do one of the following:
   - Extend the server from the rack (Extend the server from the rack).
   - Remove the server from the rack (Remove the server from the rack).
4. Remove the chassis ear.

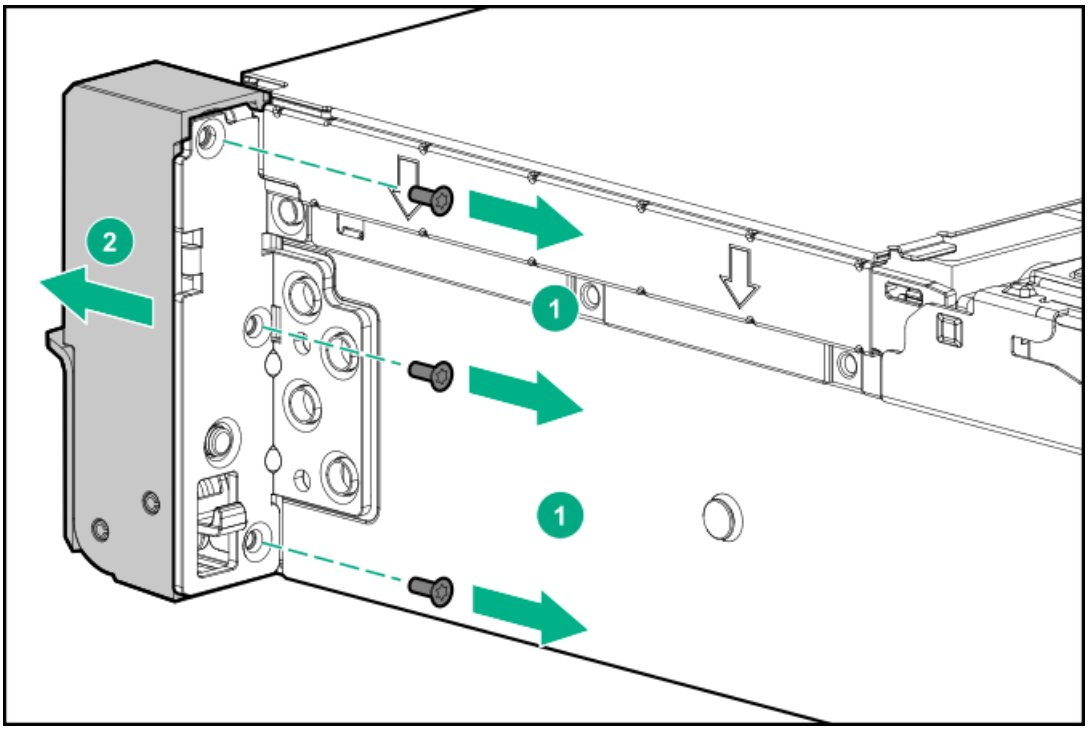

To replace the component, reverse the removal procedure.

Removing and replacing a GPU enablement board

WARNING: To reduce the risk of personal injury, electric shock, or damage to the equipment, remove the power cord to remove power from the server. The front panel Power On/Standby button does not shut off system power. Portions of the power supply and some internal circuitry remain active until AC power is removed.

CAUTION: To prevent improper cooling and thermal damage, do not operate the server unless all PCI slots have either an expansion slot cover or an expansion board installed.

Procedure

1. Power down the server(Power down the server).
2. Remove all power:
   a. Disconnect each power cord from the power source.
   b. Disconnect each power cord from the server.
3. Do one of the following:
   - Extend the server from the rack (Extend the server from the rack).
   - Remove the server from the rack (Remove the server from the rack).
4. Remove the access panel (Remove the access panel).
5. Remove the air baffle (Removing the air baffle).
6. Release the full-length expansion board retainer (Release the full-length expansion board retainer).
7. Remove the riser cage.
   - Removing and replacing the primary or secondary PCIe riser cages
   - Removing and replacing the tertiary PCIe riser cage
8. Disconnect the power cable from the GPU.
9. Remove the GPU enablement board from the GPU-enabled riser cage.
   - Primary or secondary riser cage

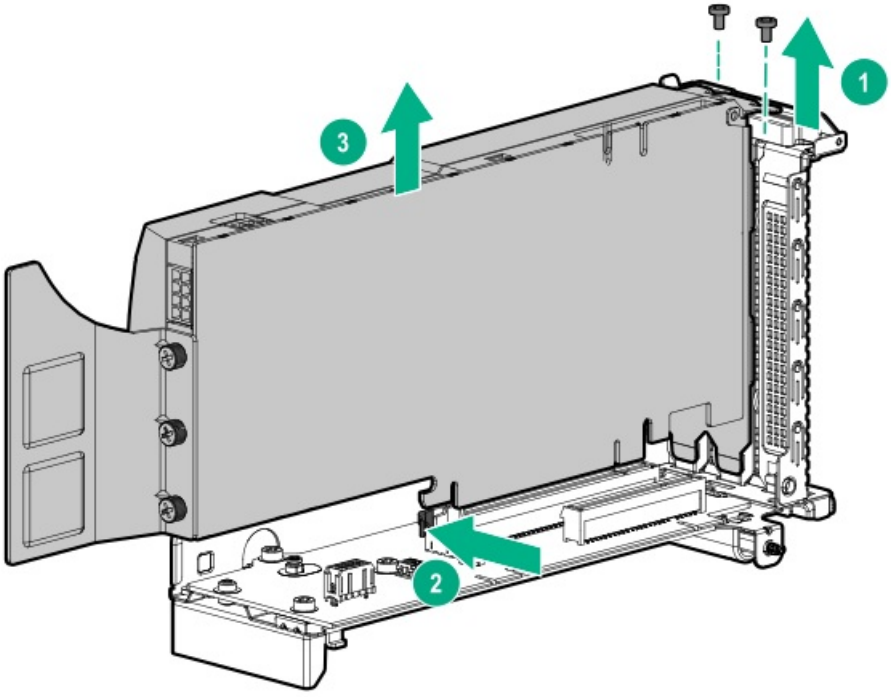

   - Tertiary riser cage

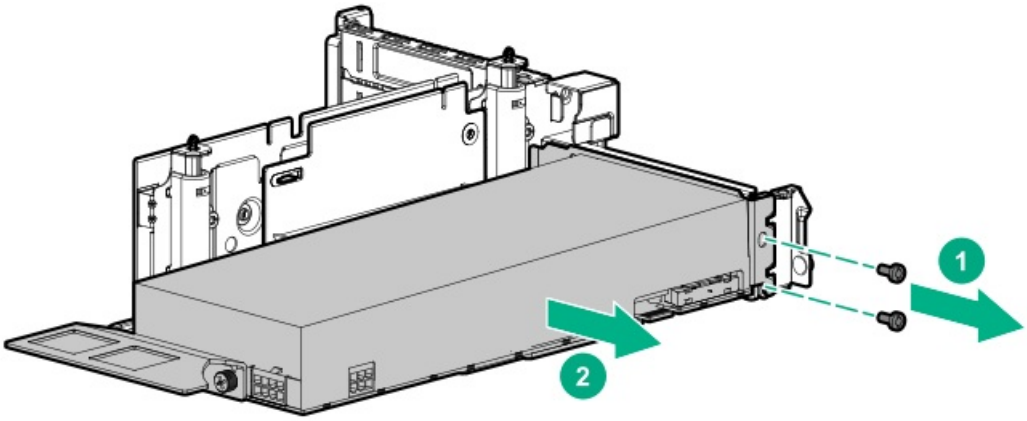

To replace the component, reverse the removal procedure.

Removing and replacing a DIMM

To identify the DIMMs installed in the server, see DIMM slot locations.

Procedure

1. Power down the server (Power down the server).
2. Remove all power:
   a. Disconnect each power cord from the power source.
   b. Disconnect each power cord from the server.
3. Do one of the following:
   - Extend the server from the rack (Extend the server from the rack).
   - Remove the server from the rack (Remove the server from the rack).
4. Remove the access panel (Remove the access panel).
5. Do one of the following:
   - Remove the air baffle (Removing the air baffle).
   - Remove the 4 LFF midplane cage (Removing and replacing a 4 LFF midplane cage).
6. Remove the DIMM.

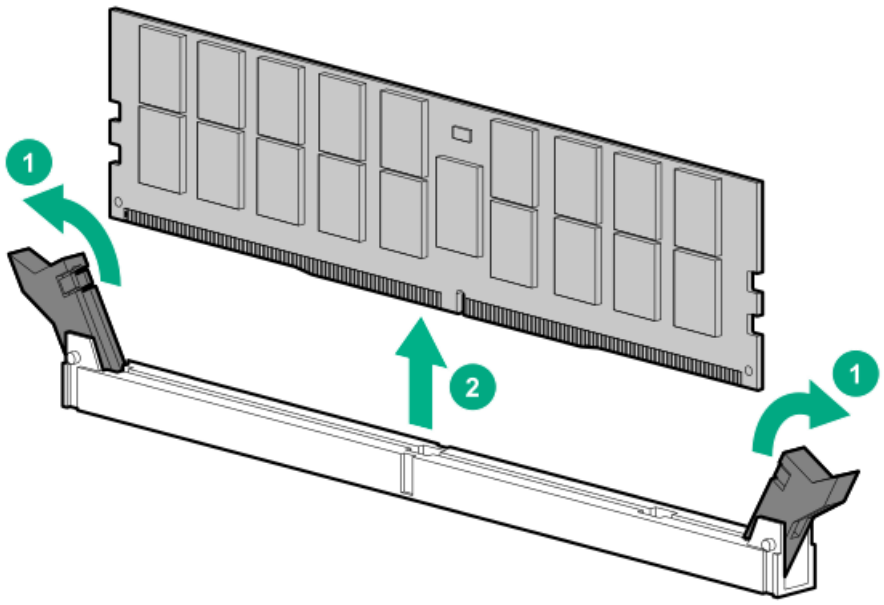

To replace the component, reverse the removal procedure.

For DIMM configuration information, see the server user guide.

DIMM-processor compatibility

The installed processor determines the type of DIMM that is supported in the server:

- First-generation Intel Xeon Scalable processors support DDR4-2666 DIMMs.
- Second-generation Intel Xeon Scalable processors support DDR4-2933 DIMMs.

Mixing DIMM types is not supported. Install only the supported DDR4-2666 or DDR4-2933 DIMMs in the server.

Removing and replacing an NVDIMM

CAUTION:

Do not remove an NVDIMM when any LEDs on any NVDIMM in the system are illuminated. Removing an NVDIMM when an LED is illuminated might cause a loss of data.

CAUTION:

Electrostatic discharge can damage electronic components. Be sure you are properly grounded before beginning this procedure.

CAUTION:

Failure to properly handle DIMMs can cause damage to DIMM components and the system board connector.

To identify NVDIMMs installed in the server, see NVDIMM identification.

Prerequisites

Before replacing memory, read the memory configuration and population guidelines in the server user guide.

Procedure

1. Observe NVDIMM relocation guidelines.
2. Power down the server (Power down the server).
3. Remove all power:
   a. Disconnect each power cord from the power source.
   b. Disconnect each power cord from the server.
4. Do one of the following:
   - Extend the server from the rack (Extend the server from the rack).
   - Remove the server from the rack (Remove the server from the rack).
5. Remove the access panel (Remove the access panel).
6. Do one of the following:
   - Remove the air baffle (Removing the air baffle).
   - Remove the 4 LFF midplane cage (Removing and replacing a 4 LFF midplane cage).
7. Observe the NVDIMM LEDs. Do not remove an NVDIMM when any NVDIMM LED in the system is illuminated.
8. Remove the NVDIMM-N.

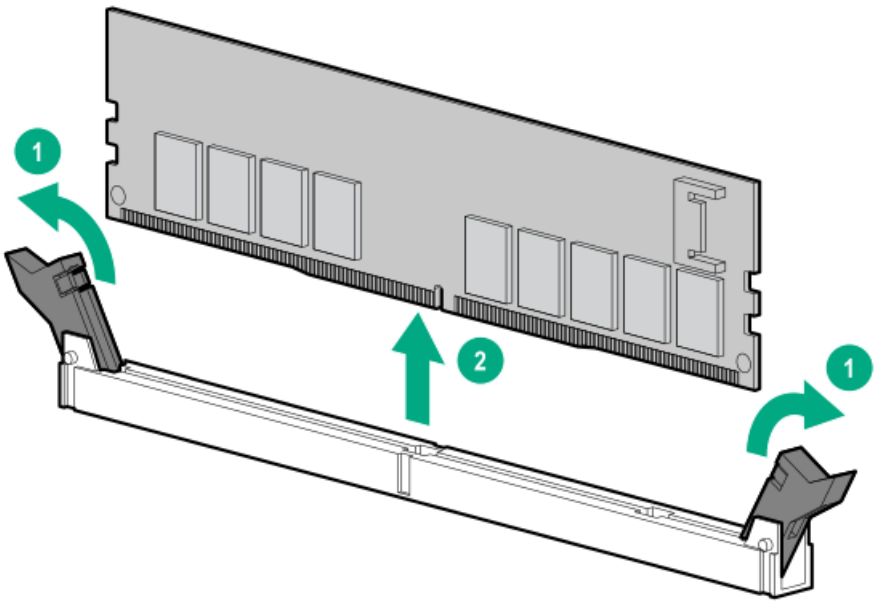

To replace the component, reverse the removal procedure.

NVDIMM-processor compatibility

HPE 16GB NVDIMMs are only supported in servers with first-generation Intel Xeon Scalable processors installed.

DIMM and NVDIMM population information

For specific DIMM and NVDIMM population information, see the DIMM population guidelines on the Hewlett Packard Enterprise website (https://www.hpe.com/docs/memory-population-rules).

NVDIMM sanitization

Media sanitization is defined by NIST SP800-88 Guidelines for Media Sanitization (Rev 1, Dec 2014) as "a general term referring to the actions taken to render data written on media unrecoverable by both ordinary and extraordinary means."

The specification defines the following levels:

- Clear: Overwrite user-addressable storage space using standard write commands; might not sanitize data in areas not currently user-addressable (such as bad blocks and overprovisioned areas)
- Purge: Overwrite or erase all storage space that might have been used to store data using dedicated device sanitize commands, such that data retrieval is "infeasible using state-of-the-art laboratory techniques"
- Destroy: Ensure that data retrieval is "infeasible using state-of-the-art laboratory techniques" and render the media unable to store data (such as disintegrate, pulverize, melt, incinerate, or shred)

The NVDIMM-N Sanitize options are intended to meet the Purge level.

For more information on sanitization for NVDIMMs, see the following sections in the HPE 16GB NVDIMM User Guide on the Hewlett Packard Enterprise website (**https://www.hpe.com/info/nvdimm-docs**):

- NVDIMM sanitization policies
- NVDIMM sanitization guidelines
- Setting the NVDIMM-N Sanitize/Erase on the Next Reboot Policy

NIST SP800-88 Guidelines for Media Sanitization (Rev 1, Dec 2014) is available for download from the NIST website (**https://nvlpubs.nist.gov/nistpubs/SpecialPublications/NIST.SP.800-88r1.pdf**).

NVDIMM relocation guidelines

Requirements for relocating NVDIMMs or a set of NVDIMMs when the data must be preserved

- The destination server hardware must match the original server hardware configuration.
- All System Utilities settings in the destination server must match the original System Utilities settings in the original server.
- If NVDIMM-Ns are used with NVDIMM Interleaving ON mode in the original server, do the following:
  - Install the NVDIMMs in the same DIMM slots in the destination server.
  - Install the entire NVDIMM set (all the NVDIMM-Ns on the processor) on the destination server.

  This guideline would apply when replacing a system board due to system failure.

  If any of the requirements cannot be met during NVDIMM relocation, do the following:
  - Manually back up the NVDIMM-N data before relocating NVDIMM-Ns to another server.
  - Relocate the NVDIMM-Ns to another server.
  - Sanitize all NVDIMM-Ns on the new server before using them.

Requirements for relocating NVDIMMs or a set of NVDIMMs when the data does not have to be preserved

If data on the NVDIMM-N or set of NVDIMM-Ns does not have to be preserved, then

- Move the NVDIMM-Ns to the new location and sanitize all NVDIMM-Ns after installing them to the new location. For more information, see NVDIMM sanitization.
- Observe all DIMM and NVDIMM population guidelines. For more information, see DIMM and NVDIMM population information.
- Observe the process for removing an NVDIMM.
- Observe the process for installing an NVDIMM.
- Review and configure the system settings for NVDIMMs. For more information, see Configuring the server for NVDIMMs .

Recovering restored data from an NVDIMM-N DRAM

CAUTION:

Do not remove an NVDIMM when any LEDs on any NVDIMM in the system are illuminated. Removing an NVDIMM when an LED is illuminated might cause a loss of data.

CAUTION:

Electrostatic discharge can damage electronic components. Be sure you are properly grounded before beginning this procedure.

CAUTION:

Failure to properly handle DIMMs can damage the DIMM components and the system board connector. For more information, see the DIMM handling guidelines in the troubleshooting guide for your product on the Hewlett Packard Enterprise website:

- HPE ProLiant Gen10 (**https://www.hpe.com/info/gen10-troubleshooting**)
- HPE Synergy (**https://www.hpe.com/info/synergy-troubleshooting**)

When the NVDIMM-N DRAM contains the only copy of restored data, perform the following procedure to recover the information:

Procedure

1. Copy the data from the NVDIMM to some other storage device (such as SSD, HDD, or another NVDIMM) as soon as possible (before cold reset or power loss).
2. Power down the server.
3. Extend or remove the server.
4. Remove the access panel.
5. Remove all components necessary to access the server DIMM slots and the HPE Smart Storage Battery.

   For more information, see the server maintenance and service guide on the Hewlett Packard Enterprise website (**https://www.hpe.com/info/enterprise-docs**).
6. Observe the NVDIMM LEDs. Do not remove an NVDIMM when any NVDIMM LED in the system is illuminated.
7. Remove the NVDIMM-N.
8. Install a replacement NVDIMM-N.
9. Install any components removed to access the DIMM slots and the HPE Smart Storage Battery.
10. Install the access panel.
11. Install the server in the rack.
12. Power up the server.
13. Sanitize the replacement NVDIMM.
14. Copy the data from the storage device to the NVDIMM-N.

Configuring the server for NVDIMMs

After installing NVDIMMs, configure the server for NVDIMMs. For information on configuring settings for NVDIMMs, see the HPE 16GB NVDIMM User Guide on the Hewlett Packard Enterprise website (**https://www.hpe.com/info/nvdimm-docs**).

The server can be configured for NVDIMMs using either of the following:

- UEFI System Utilities—Use System Utilities through the Remote Console to configure the server for NVDIMM memory options by pressing the F9 key during POST. For more information about UEFI System Utilities, see the Hewlett Packard Enterprise website (**https://www.hpe.com/info/uefi/docs**).
- iLO RESTful API for HPE iLO 5—For more information about configuring the system for NVDIMMs, see **https://hewlettpackard.github.io/ilo-rest-api-docs/ilo5/**.

Removing and replacing a persistent memory module

For specific population and configuration information, see the memory population guidelines on the Hewlett Packard Enterprise website (http://www.hpe.com/docs/memory-population-rules).

To identify the persistent memory modules installed in the server, see Intel Optane persistent memory 100 series for HPE label identification.

Procedure

1. Observe the following alerts:

   CAUTION:

   Electrostatic discharge can damage electronic components. Be sure you are properly grounded before beginning this procedure.

   CAUTION:

   Failure to properly handle persistent memory modules can damage the component and the system board connector.

2. Power down the server (Power down the server).
3. Remove all power:
   a. Disconnect each power cord from the power source.
   b. Disconnect each power cord from the server.
4. Do one of the following:
   - Extend the server from the rack (Extend the server from the rack).
   - Remove the server from the rack (Remove the server from the rack).
5. Place the server on a flat, level work surface.
6. Remove the access panel.
7. Do one of the following:
   - Remove the air baffle (Removing the air baffle).
   - Remove the 4 LFF midplane cage (Removing and replacing a 4 LFF midplane cage).
8. Remove the persistent memory module.

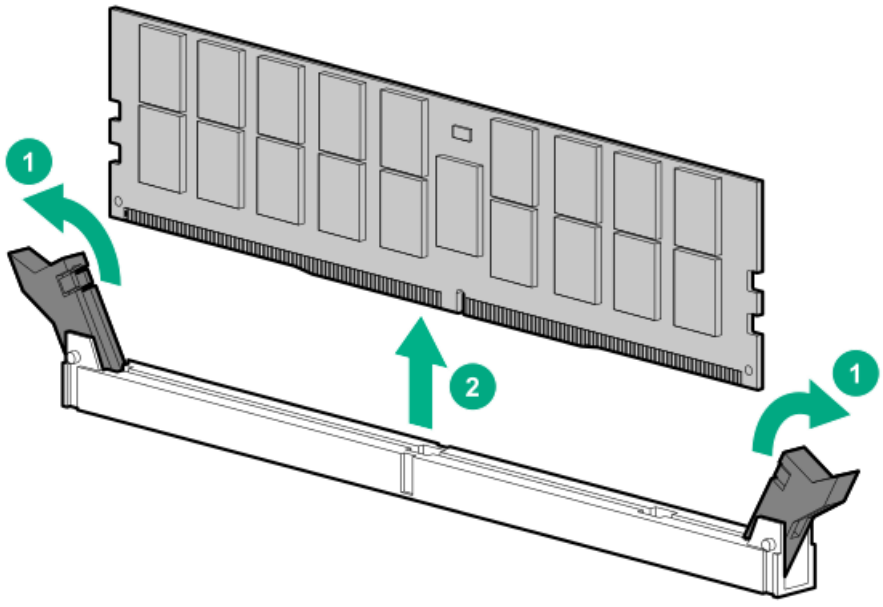

9. Install the new persistent memory module, and review the persistent memory configuration of the server.

For more information, see Configuring the server for Intel Optane persistent memory 100 series for HPE.

10. If you are relocating the persistent memory module to or from another server, see the Persistent memory module relocation guidelines.

To replace the component, reverse the removal procedure.

Persistent memory module-processor compatibility

Intel Optane persistent memory 100 series for HPE is supported only in servers with second-generation Intel Xeon Scalable processors installed.

Configuring the server for Intel Optane persistent memory 100 series for HPE

After installing persistent memory modules, configure the server for Intel Optane persistent memory for HPE.

IMPORTANT:

Always follow recommendations from your software application provider for high-availability best practices to ensure maximum uptime and data protection.

A number of configuration tools are available, including:

- UEFI System Utilities—Access System Utilities through the Remote Console to configure the server by pressing the F9 key during POST.
- iLO RESTful API—Use the iLO RESTful API through tools such as the RESTful Interface Tool (ilorest) or other third-party tools.
- HPE Persistent Memory Management Utility—The HPE Persistent Memory Management Utility is a desktop application used to configure the server for Intel Optane persistent memory 100 series for HPE, as well as evaluate and monitor the server memory configuration layout.

For more information, see the Intel Optane persistent memory 100 series for HPE User Guide on the Hewlett Packard Enterprise website (**https://www.hpe.com/info/persistentmemory-docs**).

Persistent memory module relocation guidelines

Observe the relocation guidelines when doing the following:

- When relocating persistent memory modules to another DIMM slot on the server.
- When relocating persistent memory modules to another server.
- When reinstalling persistent memory modules after replacing the server system board.

IMPORTANT:

When data must be preserved, Hewlett Packard Enterprise strongly recommends that you perform a manual backup of all user data on the persistent memory modules before changing the goal configuration or performing relocation procedures.

Requirements for relocating persistent memory modules or a set of persistent memory modules when the data must be preserved

- The destination server hardware must match the original server hardware configuration.
- All System Utilities settings in the destination server must match the original System Utilities settings in the original server.
- If persistent memory modules are used with Persistent Memory Interleaving set to Enabled in the original server, do the following:
  - Install the persistent memory modules in the same DIMM slots in the destination server.
  - Install the entire interleaved set (all the DIMMs and persistent memory modules on the processor) on the destination server.

  If any of the requirements cannot be met during relocation, do the following:
  - Manually back up the persistent memory data before relocating persistent memory modules to another server.
  - Relocate the persistent memory modules to another server.
  - Sanitize all persistent memory modules on the new server before using them.

Requirements for relocating encrypted persistent memory modules or a set of persistent memory modules when the data must be preserved

- If persistent memory modules are encrypted with local key management, either manually retrieve the persistent memory module passwords from the server (user-generated passwords only) or export a password file to a USB key.

  Hewlett Packard Enterprise recommends exporting the password file to a USB key.
- Follow the requirements for relocating persistent memory modules or a set of persistent memory modules when the data must be preserved.
- Do one of the following:
  - If persistent memory modules are encrypted with local key management, either manually enter the persistent memory module passwords in the System Utilities or import the password file from the USB key.
  - If persistent memory modules are encrypted with remote key management, enroll the HPE iLO in the key management server to provide access to the data on the persistent memory modules.

  For more information, see the Intel Optane persistent memory 100 series for HPE User Guide on the Hewlett Packard Enterprise website (**https://www.hpe.com/info/persistentmemory-docs**).

Requirements for relocating persistent memory modules or a set of persistent memory modules when the data does not have to be preserved

- Move the persistent memory modules to the new location and sanitize all persistent memory modules after installing them to the new location.
- Observe the DIMM and persistent memory module population guidelines.
- Observe the process for removing a persistent memory module.
- Observe the process for installing a persistent memory module.
- Review and configure the system settings for Intel Optane persistent memory for HPE.

For more information, see the Intel Optane persistent memory 100 series for HPE User Guide on the Hewlett Packard Enterprise

website (**https://www.hpe.com/info/persistentmemory-docs**).

Persistent memory module sanitization

Media sanitization is defined by NIST SP800-88 Guidelines for Media Sanitization (Rev 1, Dec 2014) as "a general term referring to the actions taken to render data written on media unrecoverable by both ordinary and extraordinary means."

The specification defines the following levels:

- Clear: Overwrite user-addressable storage space using standard write commands; might not sanitize data in areas not currently user-addressable (such as bad blocks and over-provisioned areas).
- Purge: Overwrite or erase all storage space that might have been used to store data using dedicated device sanitize commands, such that data retrieval is "infeasible using state-of-the-art laboratory techniques."
- Destroy: Ensure that data retrieval is "infeasible using state-of-the-art laboratory techniques" and render the media unable to store data (such as disintegrate, pulverize, melt, incinerate, or shred).

Intel Optane persistent memory for HPE supports the purge level using a cryptographic erase technique and an overwrite technique.

HPE ProLiant and HPE Synergy Gen10 server products support sanitizing persistent memory modules during POST. Use the HPE RESTful Interface Tool or UEFI System Utilities to schedule sanitization on the next boot.

For more information, see the sanitization policies and guidelines in the Intel Optane persistent memory 100 series for HPE User Guide on the Hewlett Packard Enterprise website (**https://www.hpe.com/info/persistentmemory-docs**).

NIST SP800-88 Guidelines for Media Sanitization (Rev 1, Dec 2014) is available for download from the NIST website (**https://nvlpubs.nist.gov/nistpubs/SpecialPublications/NIST.SP.800-88r1.pdf**).

Removing and replacing an energy pack

This server supports the installation of a centralized backup power source option to back up write cache content on P-class HPE Smart Array controllers in case of an unplanned server power outage. Use this procedure to remove and replace either the HPE Smart Storage battery or the HPE Smart Storage Hybrid Capacitor.

NOTE: System ROM and firmware messages might display "energy pack" in place of "Smart Storage Battery." Energy pack refers to both HPE Smart Storage batteries and HPE Smart Storage Hybrid capacitors.

Procedure

1. Power down the server (Power down the server).
2. Remove all power:
   a. Disconnect each power cord from the power source.
   b. Disconnect each power cord from the server.
3. Do one of the following:
   - Extend the server from the rack (Extend the server from the rack).
   - Remove the server from the rack (Remove the server from the rack).
4. Remove the access panel (Remove the access panel).
5. Do one of the following:
   - Remove the air baffle (Removing the air baffle).
   - Remove the 4 LFF midplane cage (Removing and replacing a 4 LFF midplane cage).
6. Remove the fan cage (Removing and replacing the fan cage).
7. Disconnect the cable, and then remove the energy pack.

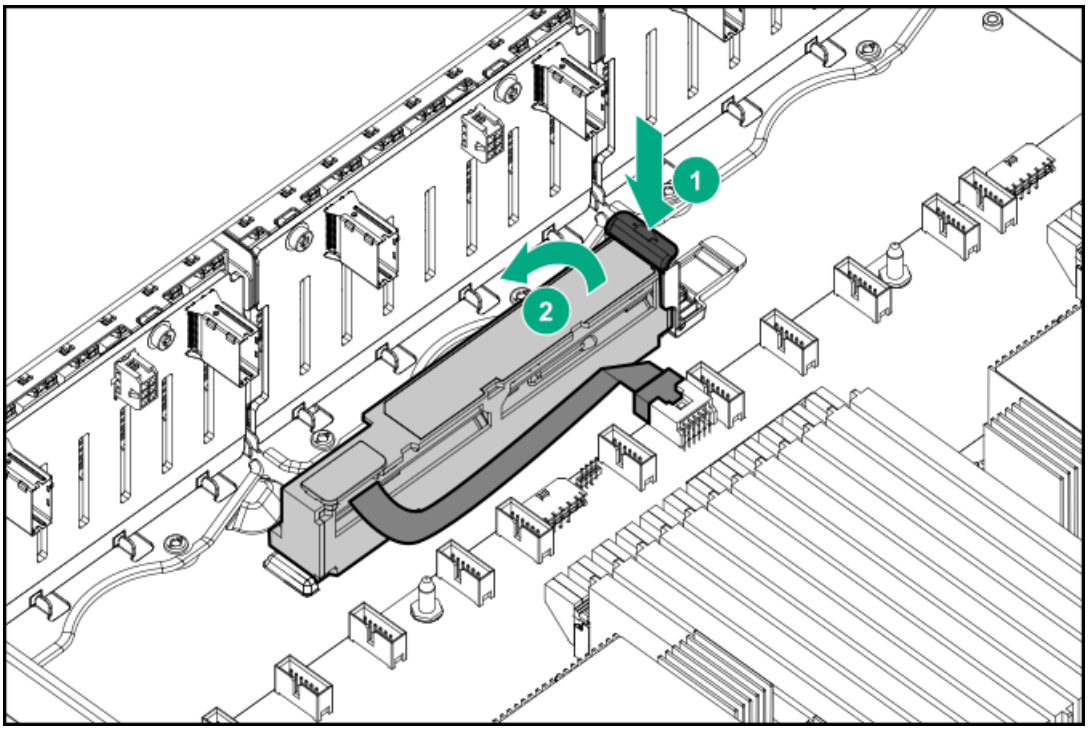

To replace the component, reverse the removal procedure.

Removing and replacing a type -a Smart Array Controller

Procedure

1. Power down the server (Power down the server).
2. Remove all power:
   a. Disconnect each power cord from the power source.
   b. Disconnect each power cord from the server.
3. Do one of the following:
   - Extend the server from the rack (Extend the server from the rack).
   - Remove the server from the rack (Remove the server from the rack).
4. Remove the access panel (Remove the access panel).
5. Do one of the following:
   - Remove the air baffle (Removing the air baffle).
   - Remove the 4 LFF midplane cage (Removing and replacing a 4 LFF midplane cage).
6. Disconnect the SAS cables.
7. Remove the controller.

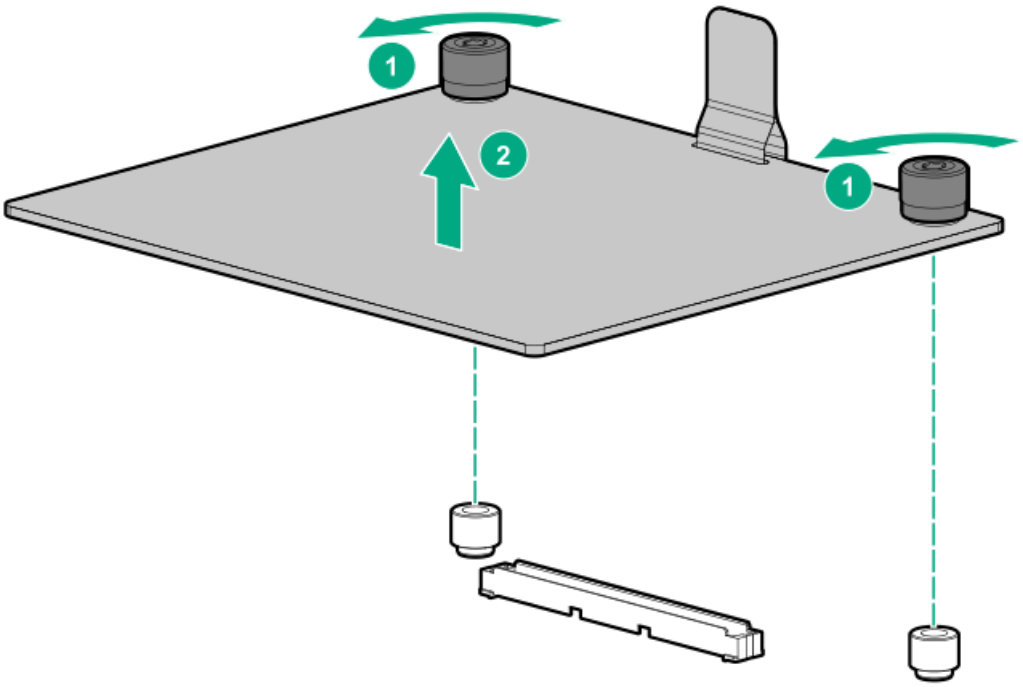

To replace the component, reverse the removal procedure.

Removing and replacing the system battery

The system battery provides power to the real-time clock. If the server no longer automatically displays the correct date and time, you might need to replace the system battery.

> ⚠ **WARNING:** The computer contains an internal lithium manganese dioxide, a vanadium pentoxide, or an alkaline battery pack. A risk of fire and burns exists if the battery pack is not properly handled. To reduce the risk of personal injury:
> - Do not attempt to recharge the battery.
> - Do not expose the battery to temperatures higher than 60°C (140°F).
> - Do not disassemble, crush, puncture, short external contacts, or dispose of in fire or water.
> - Replace only with the spare designated for this product.

Procedure

1. Power down the server (Power down the server).
2. Remove all power:
   - Disconnect each power cord from the power source.
   - Disconnect each power cord from the server.
3. Do one of the following:
   - Extend the server from the rack (Extend the server from the rack).
   - Remove the server from the rack (Remove the server from the rack .
4. Remove the access panel (Remove the access panel).
5. If installed, remove the tertiary PCIe riser cage (Removing and replacing the tertiary PCIe riser cage).
6. Locate the battery (System board components).
7. Remove the battery.

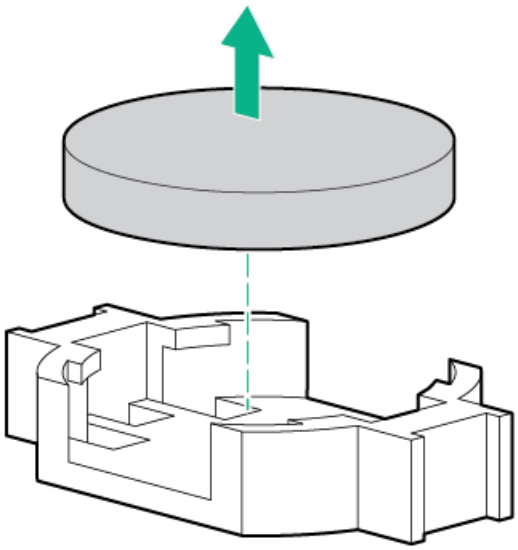

8. To replace the component, reverse the removal procedure.
9. Properly dispose of the old battery.

   For more information about battery replacement or proper disposal, contact an authorized reseller or an authorized service provider.

Removing and replacing the system board

Prerequisites

If persistent memory modules are installed in the server and are encrypted with local key management, do one of the following:

- Manually retrieve the persistent memory module passwords from the server (user-generated passwords only)
- Export a password file to a USB key.

  Hewlett Packard Enterprise recommends exporting the password file to a USB key.

For more information, see the Intel Optane persistent memory 100 series for HPE User Guide on the Hewlett Packard Enterprise website (**https://www.hpe.com/info/persistentmemory-docs**).

Procedure

Removing the system board

1. Power down the server.
2. Remove all power:
   a. Disconnect each power cord from the power source.
   b. Disconnect each power cord from the server.
3. Remove the server from the rack.
4. Remove all power supplies.
5. Remove the access panel.
6. Do one of the following:
   - Remove the air baffle.
   - Remove the 4 LFF midplane cage.
7. Remove the primary or secondary PCIe riser cage.
8. If installed, remove the tertiary PCIe riser cage.
9. Remove the FlexibleLOM.
10. Remove all DIMMs.

    Be sure to note the DIMM slot locations in which each DIMM is installed. These components must be installed in the same locations on the new system board.
11. Remove the persistent memory modules installed on the system board.

    Be sure to note the DIMM slot locations in which each persistent memory module is installed. These components must be installed in the same locations on the new system board.
12. Do the following:
    a. Observe the guidelines and procedures for NVDIMM relocation.
    b. Remove all NVDIMMs
13. Remove the fan cage.
14. Disconnect all cables connected to the system board.
15. Observe the following cautions.

    △ **CAUTION:** Be sure to loosen each heatsink nut in the order indicated. Otherwise, damage might occur to the heatsink or processor.

    △ **CAUTION:** Install the processor heatsink assembly as soon as possible after removing it. Do not leave the processor socket unpopulated for extended periods of time.
16. Remove the processor-heatsink assembly:

a. Allow the heatsink to cool.

b. Using a T-30 Torx screwdriver, loosen the heatsink nuts.

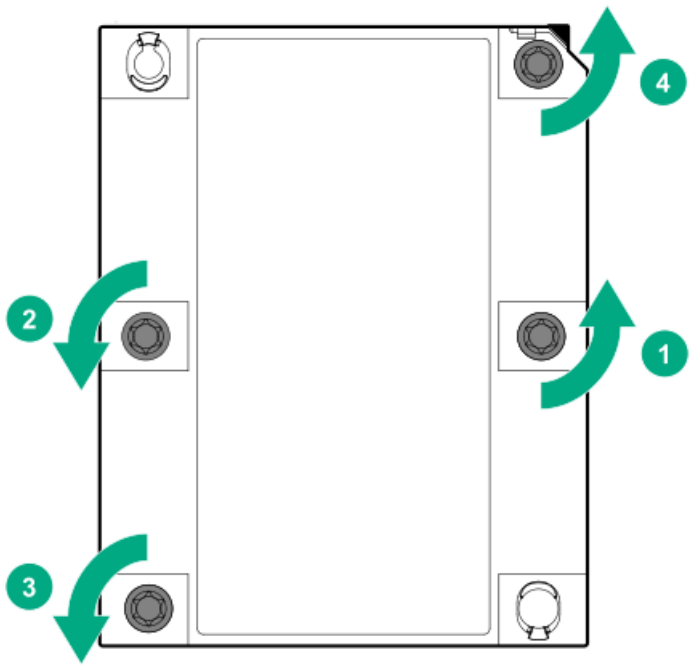

c. Lift the processor-heatsink assembly up and away from the system board.

d. Turn the processor-heatsink assembly over on a work surface with the processor facing up.

e. Install the dust cover on each processor socket on the failed system board.

17. Loosen the system board thumbscrews.

18. Remove the system board, using the handle to lift it out of the chassis.

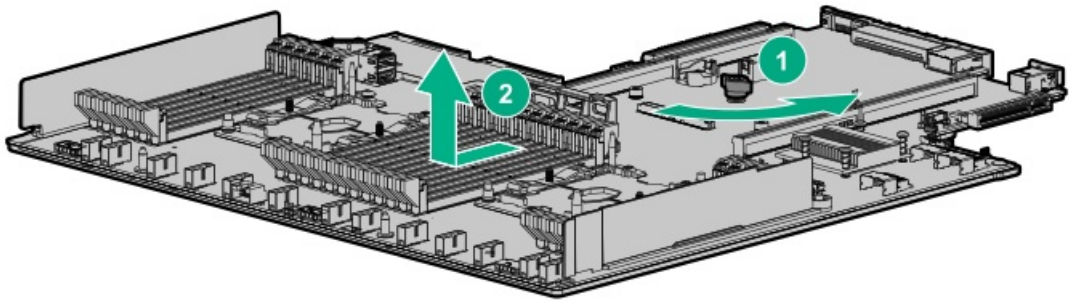

Replacing the system board

19. Install the spare system board.

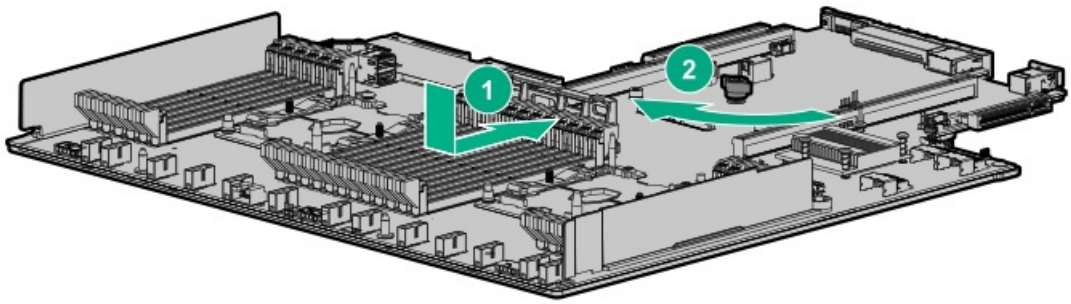

20. Install the processor-heatsink assembly:

    a. Locate the Pin 1 indicator on the processor carrier and the socket.

    b. Align the processor-heatsink assembly with the heatsink alignment pins and gently lower it down until it sits evenly on the socket.

       The heatsink alignment pins are keyed. The processor-heatsink assembly will only install one way.

       Your heatsink might look different than the one shown.

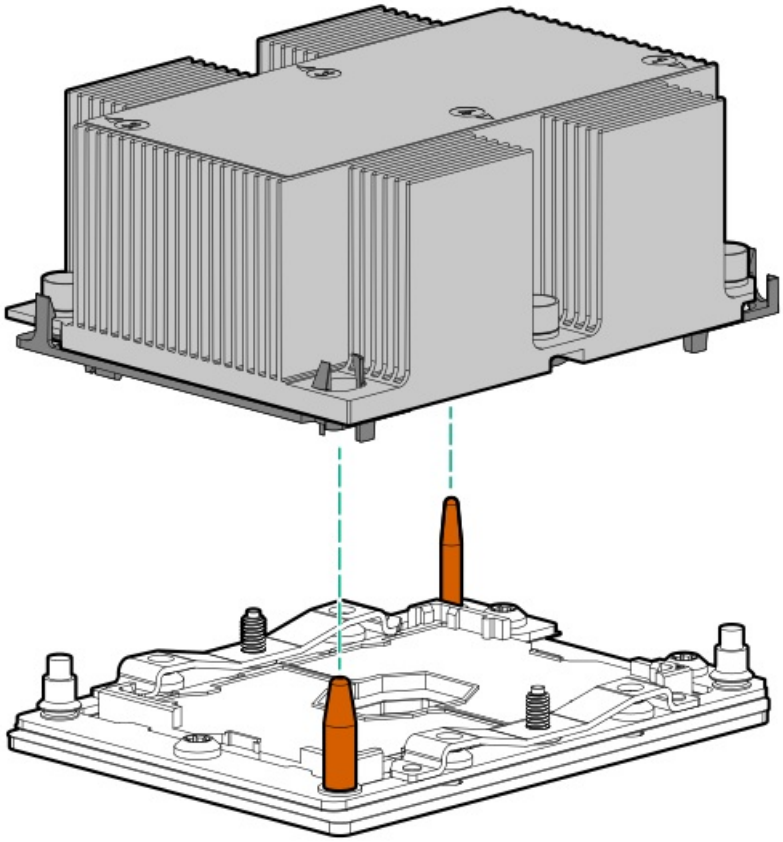

    c. Using a T-30 Torx screwdriver, fully tighten each heatsink nut until it no longer turns.

> △ **CAUTION:** Be sure to tighten each heatsink nut fully in the order indicated. Otherwise, boot failure or intermittent shutdowns might occur.

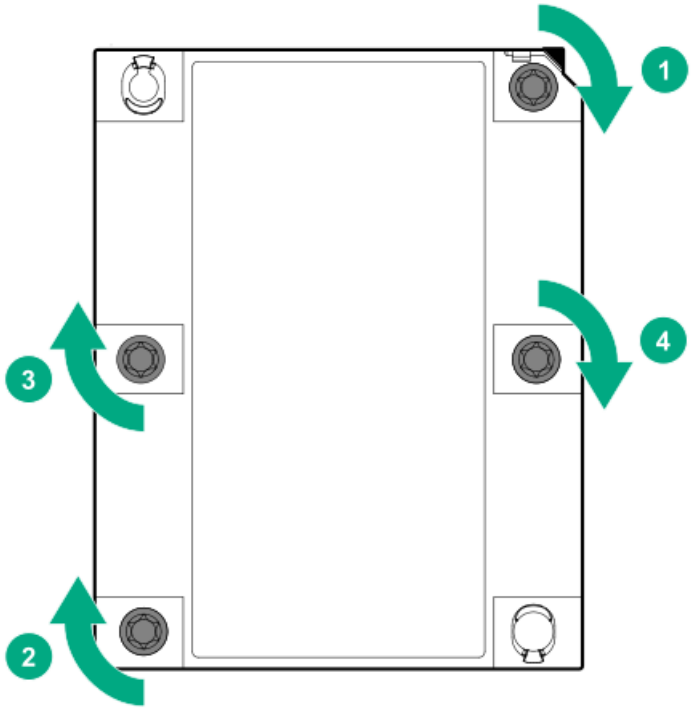

IMPORTANT: Install all components with the same configuration that was used on the failed system board.

21. Install all components removed from the failed system board.

    Be sure to install the DIMMs and persistent memory modules in the same DIMM slots as the failed system board.

22. Install the access panel.
23. Install the power supplies.
24. Power up the server.
25. Ensure all firmware, including option cards and embedded devices, is updated to the same versions to ensure that the latest drivers are being used.
26. Re-enter any Secure Boot Keys that were previously added in the Secure Boot configuration.
27. Re-enter the server serial number and the product ID.
28. For servers that support Scalable Persistent Memory, restore the logical NVDIMMs from the last Scalable Persistent Memory backup operation.
29. Review the persistent memory configuration of the server.

    For more information, see Configuring the server for Intel Optane persistent memory 100 series for HPE.

30. Do one of the following:

    - If persistent memory modules are encrypted with local key management, either manually enter the persistent memory module passwords in the System Utilities or import the password file from the USB key.
    - If persistent memory modules are encrypted with remote key management, enroll the server iLO in the key management server to provide access to the data on the persistent memory modules.

    For more information, see the Intel Optane persistent memory 100 series for HPE User Guide on the Hewlett Packard Enterprise website (**https://www.hpe.com/info/persistentmemory-docs**).

Re-entering the server serial number and product ID

After you replace the system board, the server serial number and the product ID must be configured:

Procedure

1. Access System Utilities. During POST, press F9.
2. On the System Utilities home screen, select System Configuration > BIOS/Platform Configuration (RBSU) > Advanced Options > Advanced Service Options.
3. Select the Serial Number field and press Enter.

   The following alert appears:

   `The serial number is modified by qualified service personnel and must match the serial number located on the chassis.`
4. Click OK.
5. Type the serial number and press Enter.
6. From the System Utilities screen, select System Configuration > BIOS/Platform Configuration (RBSU) > Date and Time.
7. Select a setting, and then complete your entry:
   - Date (mm-dd-yyyy)—Enter the date in a month-day-year (mm-dd-yyyy) format.
   - Time (hh:mm:ss)—Enter the time in a 24-hour format (hh:mm:ss) format.
   - Time Zone—Select your current time zone for the system.
   - Daylight Savings Time:
     - Enabled—Adjusts the local time displayed by one hour for Daylight Savings Time.
     - Disabled—Does not adjust the local time displayed for Daylight Savings Time.
   - Time Format
     - Coordinated Universal Time (UTC) — Calculates the time stored in the hardware Real Time Clock (RTC) from the associated Time Zone setting.
     - Local Time—Removes the use of the Time Zone setting.

       This option is useful for addressing interaction issues between Windows operating systems set in Legacy BIOS boot mode.
8. Save your settings.
9. Select the Product ID field and press Enter.

   The following alert appears:

   `Product ID is modified only by qualified personnel. This value must match the product ID located on the chassis.`
10. Type the product ID and press Enter.
11. Press **F10** to save the configuration.

The procedure is complete.

Restoring logical NVDIMMs after system board replacement

If the data in the logical NVDIMMs has changed since the last Scalable Persistent Memory backup operation and the data has not been backed up using other means, the changed data will be lost.

The logical NVDIMMs (configuration and data) from the last Scalable Persistent Memory backup are stored on the drives.

The logical NVDIMMs can be restored from the drives after the motherboard is replaced.

Procedure

1. Launch the System ROM System Utilities by pressing the F9 key during POST.
2. If your server is configured for HPE Scalable Persistent Memory External Backup Power, set the Persistent Memory Backup Power Policy. If your server is configured for HPE Scalable Persistent Memory, proceed to the next step.
   a. Navigate to the Persistent Memory Options menu.

      System configuration > BIOS/Platform Configuration (RBSU) > Memory Options > Persistent Memory Options

   b. Set the Persistent Memory Backup Power Policy to Use External Backup Power.

      In some configurations, Use External Backup Power is the default setting.

   c. Save your setting.
3. Navigate to the Scalable Persistent Memory Options menu.

   NOTE:

   In some configurations, the server must be rebooted to enable the Scalable Persistent Memory Options menu after changing or setting the backup power policy. If the menu selection is disabled, reboot the server, and then return to the Persistent Memory Options menu to proceed.

   System configuration > BIOS/Platform Configuration (RBSU) > Memory Options > Persistent Memory Options > Scalable Persistent Memory Options
4. Set the Functionality field to Enabled.
5. Select the Recovery Options submenu.
6. Set the Restore Configuration field to Enabled.
7. Select F12: Save Changes and Exit.
8. Select Yes - Save Changes.
9. Press the Enter key to reboot the server.

The configuration and data on the logical NVDIMMs will be restored during the system boot process.

HPE Trusted Platform Module 2.0 Gen10 Option

The HPE Trusted Platform Module 2.0 Gen10 Option is not a customer-removable part.

> ⚠ **CAUTION:** If the TPM is removed from the original server and powered up on a different server, data stored in the TPM including keys will be erased.

If you suspect a TPM board failure, leave the TPM installed and remove the system board (Removing and replacing the system board). Contact a Hewlett Packard Enterprise authorized service provider for a replacement system board and TPM board.

Troubleshooting

Troubleshooting resources

Troubleshooting resources are available for HPE Gen10 and Gen10 Plus server products in the following documents:

- Troubleshooting Guide for HPE ProLiant Gen10 and Gen10 Plus servers provides procedures for resolving common problems and comprehensive courses of action for fault isolation and identification, issue resolution, and software maintenance.
- Error Message Guide for HPE ProLiant Gen10 servers and HPE Synergy provides a list of error messages and information to assist with interpreting and resolving error messages.
- Error Message Guide for HPE ProLiant Gen10 Plus servers and HPE Synergy provides a list of error messages and information to assist with interpreting and resolving error messages.
- Integrated Management Log Messages and Troubleshooting Guide for HPE ProLiant Gen10 and Gen10 Plus servers and HPE Synergy provides IML messages and associated troubleshooting information to resolve critical and cautionary IML events.

To access troubleshooting resources for your product, see the Hewlett Packard Enterprise Information Library:

- For Gen10 servers, see **https://www.hpe.com/info/gen10-troubleshooting**.
- For Gen10 Plus servers, see **https://www.hpe.com/info/gen10plus-troubleshooting**.

Diagnostic tools

Product QuickSpecs

For more information about product features, specifications, options, configurations, and compatibility, see the product QuickSpecs on the Hewlett Packard Enterprise website (**https://www.hpe.com/info/qs**).

UEFI System Utilities

The UEFI System Utilities is embedded in the system ROM. Its features enable you to perform a wide range of configuration activities, including:

- Configuring system devices and installed options.
- Enabling and disabling system features.
- Displaying system information.
- Selecting the primary boot controller or partition.
- Configuring memory options.
- Launching other preboot environments.

HPE servers with UEFI can provide:

- Support for boot partitions larger than 2.2 TB. Such configurations could previously only be used for boot drives when using RAID solutions.
- Secure Boot that enables the system firmware, option card firmware, operating systems, and software collaborate to enhance platform security.
- UEFI Graphical User Interface (GUI)
- An Embedded UEFI Shell that provides a preboot environment for running scripts and tools.
- Boot support for option cards that only support a UEFI option ROM.

Selecting the boot mode

This server provides two Boot Mode configurations: UEFI Mode and Legacy BIOS Mode. Certain boot options require that you select a specific boot mode. By default, the boot mode is set to UEFI Mode. The system must boot in UEFI Mode to use certain options, including:

- Secure Boot, UEFI Optimized Boot, Generic USB Boot, IPv6 PXE Boot, iSCSI Boot, and Boot from URL
- Fibre Channel/FCoE Scan Policy

> **NOTE:**
> The boot mode you use must match the operating system installation. If not, changing the boot mode can impact the ability of the server to boot to the installed operating system.

Prerequisite

When booting to UEFI Mode, leave UEFI Optimized Boot enabled.

Procedure

1. From the System Utilities screen, select System Configuration > BIOS/Platform Configuration (RBSU) > Boot Options > Boot Mode.
2. Select a setting.
   - UEFI Mode (default)—Configures the system to boot to a UEFI compatible operating system.
   - Legacy BIOS Mode—Configures the system to boot to a traditional operating system in Legacy BIOS compatibility mode.
3. Save your setting.
4. Reboot the server.

Secure Boot

Secure Boot is a server security feature that is implemented in the BIOS and does not require special hardware. Secure Boot ensures that each component launched during the boot process is digitally signed and that the signature is validated against a set of trusted certificates embedded in the UEFI BIOS. Secure Boot validates the software identity of the following components in the boot process:

- UEFI drivers loaded from PCIe cards
- UEFI drivers loaded from mass storage devices
- Preboot UEFI Shell applications
- OS UEFI boot loaders

When Secure Boot is enabled:

- Firmware components and operating systems with boot loaders must have an appropriate digital signature to execute during the boot process.
- Operating systems must support Secure Boot and have an EFI boot loader signed with one of the authorized keys to boot. For more information about supported operating systems, see **https://www.hpe.com/servers/ossupport**.

You can customize the certificates embedded in the UEFI BIOS by adding or removing your own certificates, either from a management console directly attached to the server, or by remotely connecting to the server using the iLO Remote Console.

You can configure Secure Boot:

- Using the System Utilities options described in the following sections.
- Using the iLO RESTful API to clear and restore certificates. For more information, see the Hewlett Packard Enterprise website (**https://www.hpe.com/info/redfish**).
- Using the `secboot` command in the Embedded UEFI Shell to display Secure Boot databases, keys, and security reports.

Launching the Embedded UEFI Shell

Use the Embedded UEFI Shell option to launch the Embedded UEFI Shell. The Embedded UEFI Shell is a preboot command-line environment for scripting and running UEFI applications, including UEFI boot loaders. The Shell also provides CLI-based commands you can use to obtain system information, and to configure and update the system BIOS.

Prerequisites

- Embedded UEFI Shell is set to Enabled.

Procedure

1. From the System Utilities screen, select Embedded Applications > Embedded UEFI Shell.

   The Embedded UEFI Shell screen appears.

2. Press any key to acknowledge that you are physically present.

   This step ensures that certain features, such as disabling Secure Boot or managing the Secure Boot certificates using third-party UEFI tools, are not restricted.

3. If an administrator password is set, enter it at the prompt and press Enter.

   The `Shell>` prompt appears.

4. Enter the commands required to complete your task.

5. Enter the `exit` command to exit the Shell.

Intelligent Provisioning

Intelligent Provisioning is a single-server deployment tool embedded in ProLiant servers and HPE Synergy compute modules. Intelligent Provisioning simplifies server setup, providing a reliable and consistent way to deploy servers.

NOTE:

- Rapid Setup Software is only available on the ProLiant 300 Series servers or below. When you launch F10 mode from the POST screen, you are prompted to select whether you want to enter the Intelligent Provisioning or HPE Rapid Setup Software mode.
- After you have selected a mode, you must reprovision the server to change the mode that launches when you boot to F10.

Intelligent Provisioning prepares the system for installing original, licensed vendor media and Hewlett Packard Enterprise-branded versions of OS software. Intelligent Provisioning also prepares the system to integrate optimized server support software from the Service Pack for ProLiant (SPP). SPP is a comprehensive systems software and firmware solution for ProLiant servers, server blades, their enclosures, and HPE Synergy compute modules. These components are preloaded with a basic set of firmware and OS components that are installed along with Intelligent Provisioning.

IMPORTANT:

HPE ProLiant DX/XL servers do not support operating system installation with Intelligent Provisioning, but they do support the maintenance features. For more information, see "Performing Maintenance" in the Intelligent Provisioning user guide and online help.

After the server is running, you can update the firmware to install additional components. You can also update any components that have been outdated since the server was manufactured.

To access Intelligent Provisioning:

- Press F10 from the POST screen and enter either Intelligent Provisioning or HPE Rapid Setup Software.
- From the iLO web interface using Lifecycle Management. Lifecycle Management allows you to access Intelligent Provisioning without rebooting your server.

Intelligent Provisioning operation

NOTE:
Intelligent Provisioning 3.40 and later requires iLO firmware version 2.10 or later.

Intelligent Provisioning includes the following components:

- Critical boot drivers
- Active Health System (AHS)
- Erase Utility
- Deployment Settings

IMPORTANT:

- Although your server is preloaded with firmware and drivers, Hewlett Packard Enterprise recommends updating the firmware upon initial setup. Also, downloading and updating the latest version of Intelligent Provisioning ensures the latest supported features are available.
- For ProLiant servers, firmware is updated using the Intelligent Provisioning Firmware Update utility.
- Do not update firmware if the version you are currently running is required for compatibility.

NOTE:
Intelligent Provisioning does not function within multihomed configurations. A multihomed host is one that is connected to two or more networks or has two or more IP addresses.

Intelligent Provisioning provides installation help for the following operating systems:

- Microsoft Windows Server
- Red Hat Enterprise Linux
- SUSE Linux Enterprise Server
- VMware ESXi/vSphere Custom Image
- ClearOS

Not all versions of an OS are supported. For information about specific versions of a supported operating system, see the OS Support Matrix on the Hewlett Packard Enterprise website (**https://www.hpe.com/info/ossupport**).

HPE Insight Remote Support

Hewlett Packard Enterprise strongly recommends that you register your device for remote support to enable enhanced delivery of your Hewlett Packard Enterprise warranty, HPE support services, or Hewlett Packard Enterprise contractual support agreement. Insight Remote Support supplements your monitoring continuously to ensure maximum system availability by providing intelligent event diagnosis, and automatic, secure submission of hardware event notifications to Hewlett Packard Enterprise, which will initiate a fast and accurate resolution, based on your product's service level. Notifications can be sent to your authorized Hewlett Packard Enterprise Channel Partner for onsite service, if configured and available in your country.

For more information, see Insight Remote Support and Insight Online Setup Guide for ProLiant Servers and BladeSystem c-Class Enclosures on the **Hewlett Packard Enterprise website**. Insight Remote Support is available as part of Hewlett Packard Enterprise Warranty, HPE support services, or Hewlett Packard Enterprise contractual support agreement.

USB support

Hewlett Packard Enterprise Gen10 and Gen10 Plus servers support all USB operating speeds depending on the device that is connected to the server.

External USB functionality

Hewlett Packard Enterprise provides external USB support to enable local connection of USB devices for server administration, configuration, and diagnostic procedures.

For additional security, external USB functionality can be disabled through USB options in UEFI System Utilities.

HPE Smart Storage Administrator

HPE SSA is the main tool for configuring arrays on HPE Smart Array SR controllers. It exists in three interface formats: the HPE SSA GUI, the HPE SSA CLI, and HPE SSA Scripting. All formats provide support for configuration tasks. Some of the advanced tasks are available in only one format.

The diagnostic features in HPE SSA are also available in the standalone software HPE Smart Storage Administrator Diagnostics Utility CLI.

During the initial provisioning of the server or compute module, an array is required to be configured before the operating system can be installed. You can configure the array using SSA.

HPE SSA is accessible both offline (either through HPE Intelligent Provisioning or as a standalone bootable ISO image) and online:

- Accessing HPE SSA in the offline environment

  IMPORTANT: If you are updating an existing server in an offline environment, obtain the latest version of HPE SSA through Service Pack for ProLiant before performing configuration procedures.

  Using one of multiple methods, you can run HPE SSA before launching the host operating system. In offline mode, users can configure or maintain detected and supported devices, such as optional Smart Array controllers and integrated Smart Array controllers. Some HPE SSA features are only available in the offline environment, such as setting the boot controller and boot volume.

- Accessing HPE SSA in the online environment
  This method requires an administrator to download the HPE SSA executables and install them. You can run HPE SSA online after launching the host operating system.

For more information, see HPE Smart Array SR Gen10 Configuration Guide at the **Hewlett Packard Enterprise website**.

HPE MR Storage Administrator

HPE MR Storage Administrator is a web-based application that enables you to monitor, configure, maintain, and troubleshoot the HPE Smart Array MR controller. MR Storage Administrator enables you to view, create, and manage storage configurations.

> **IMPORTANT:**
>
> The HPE MR Storage Administrator manages **only** the HPE Smart Array MR controllers. It does not manage HPE Smart Array SR controllers.

- **Monitoring and configuring**: MR Storage Administrator enables you to monitor the controllers and configure the drives on the controller. It displays the status of the controller cards, logical drives, and drives on the controller. The device status icons notify you if there are drive failures and other events that require your immediate attention. Email notifications about the status of the server are sent based on your alert settings. The system errors and events are recorded and displayed in an event log file. You can also import or clear foreign configurations.

  > **IMPORTANT:**
  >
  > Limited alerting and monitoring is available through iLO when HPE Agentless Management Service is installed. The HPE Smart Array P824i-p MR Gen10 controller supports limited alerts through iLO using the AMS agent.

- **Maintaining**: Using MR Storage Administrator, you can perform system maintenance tasks, such as updating the controller firmware.
- **Troubleshooting**: MR Storage Administrator displays information related to drive failures, device failures, and other issues. It also provides recommendations and displays contextual links, helping you to locate the drives/devices that have issues and troubleshoot them. You can also download a report of the devices and their configurations, properties, and settings and send it to Hewlett Packard Enterprise Support for further troubleshooting.

Obtain MR Storage Administrator installation files through the Service Pack for ProLiant, or SPP, which you can download from the Hewlett Packard Enterprise website (**https://www.hpe.com/servers/spp/download**). Be sure to use the latest SPP version for the server.

For more information about the MR Storage Administrator, see MR Storage Administrator User Guide on the Hewlett Packard Enterprise website (**https://www.hpe.com/info/P824i-pdocs**).

HPE InfoSight for servers

The HPE InfoSight portal is a secure web interface hosted by HPE that allows you to monitor supported devices through a graphical interface.

HPE InfoSight for servers:

- Combines the machine learning and predictive analytics of HPE InfoSight with the health and performance monitoring of Active Health System (AHS) and HPE iLO to optimize performance and predict and prevent problems
- Provides automatic collection and analysis of the sensor and telemetry data from AHS to derive insights from the behaviors of the install base to provide recommendations to resolve problems and improve performance

For more information on getting started and using HPE InfoSight for servers, go to: **https://www.hpe.com/info/infosight-servers-docs**.

StorCLI

The Storage Command Line Interface (StorCLI) tool is the command line management software designed for the HPE Smart Array MR controller. StorCLI is a command line interface that is designed to be easy to use, consistent, and easy to script.

Obtain StorCLI through the Service Pack for ProLiant, or SPP, which you can download from **https://www.hpe.com/servers/spp/download**. Be sure to use the latest SPP version for the server.

For more information about StorCLI, see StorCLI User Guide on the Hewlett Packard Enterprise website **https://www.hpe.com/info/P824i-pdocs**.

Component identification

Front panel components

SFF front panel components

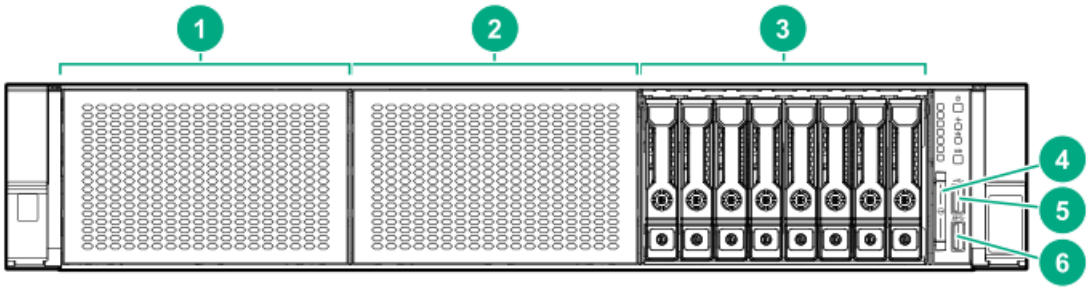

Item	Description
1	Box 1 (optional drives or universal media bay)
2	Box 2 (optional drives)
3	Box 3 Drives 1-8
4	Serial label pull tab or optional Systems Insight Display
5	iLO service port
6	USB 3.0 port

Universal media bay components

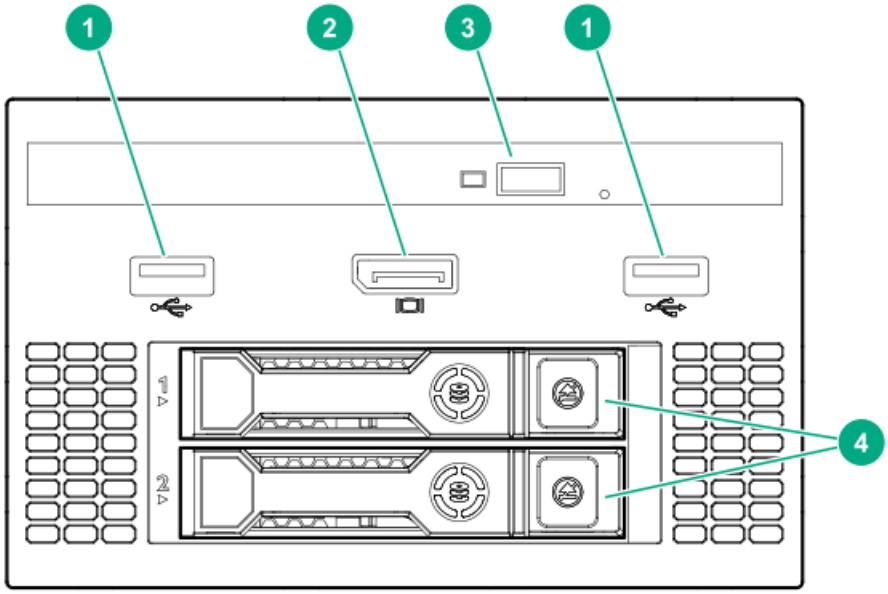

Item	Description
1	USB 2.0 port
2	Video display port
3	Optical disc drive (optional)
4	Drives (optional)

12-drive LFF front panel components

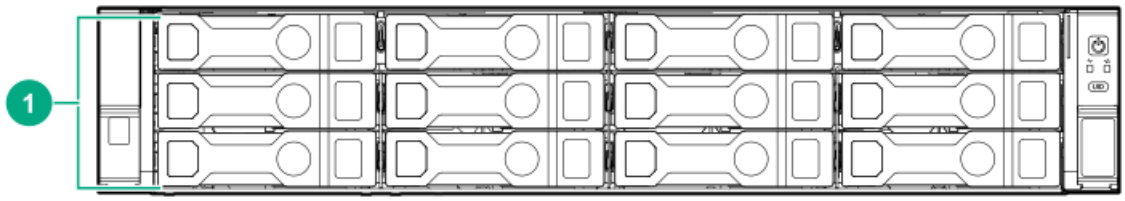

Item	Description
1	Drive bays

8-drive LFF model front panel components

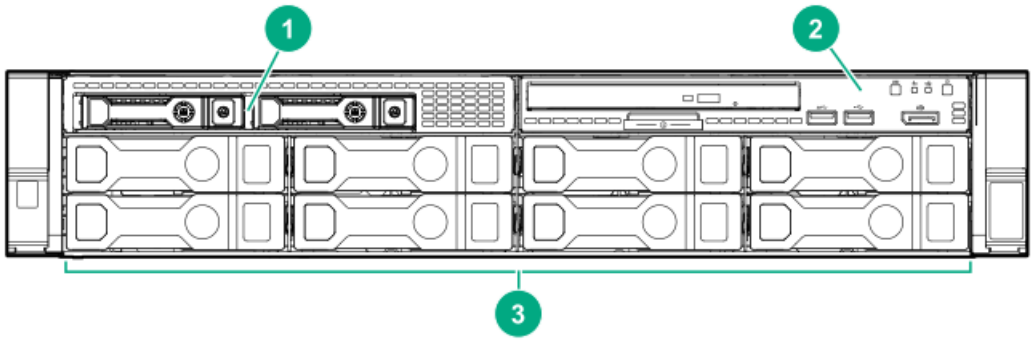

Item	Description
1	Drives (optional)
2	LFF power switch module
3	Drive bays

LFF power switch module components

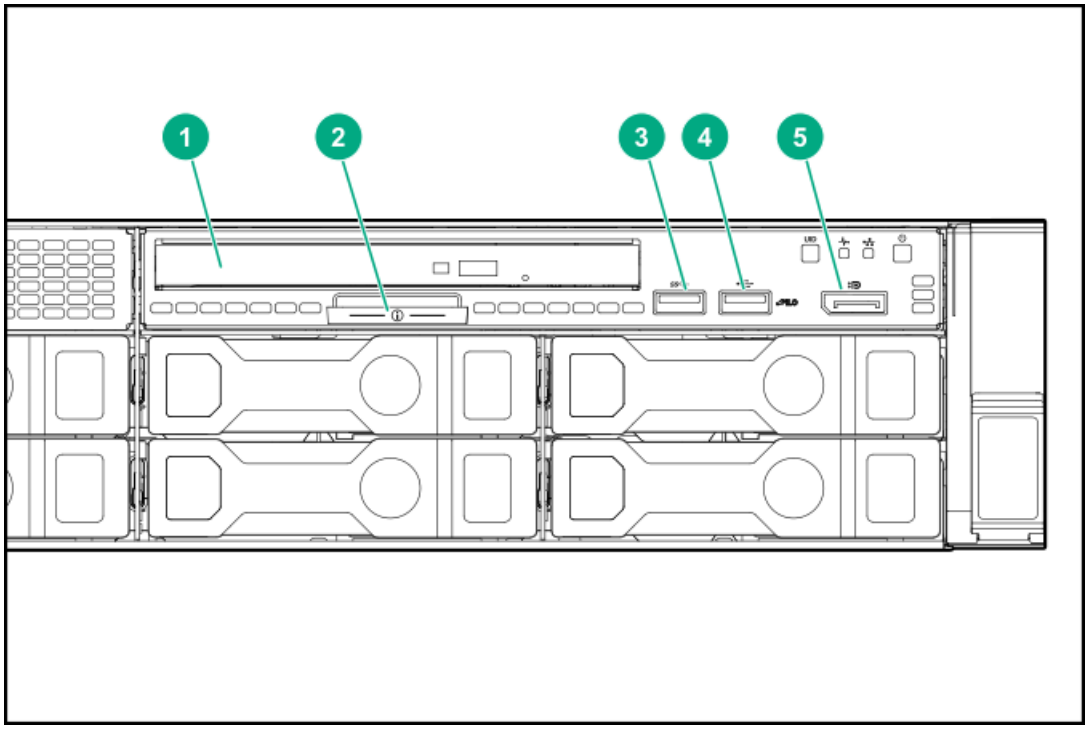

Item	Description

Item	Description
1	Optical disk drive
2	Serial label pull tab
3	USB 3.0 port
4	iLO service port
5	Video display port

Front panel LEDs and buttons

SFF front panel LEDs and button

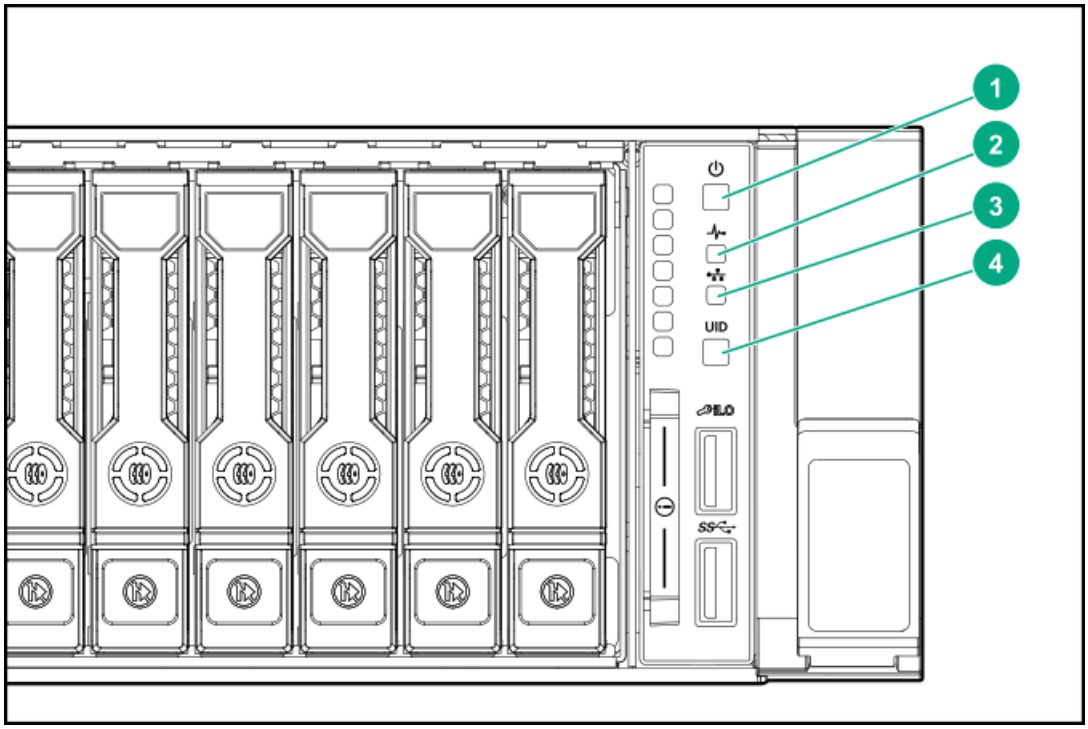

Item	Description	Status
1	Power On/Standby button and system power LED*	Solid green = System on Flashing green (1 Hz/cycle per sec) = Performing power on sequence Solid amber = System in standby Off = No power present†
2	Health LED*	Solid green = Normal Flashing green (1 Hz/cycle per sec) = iLO is rebooting Flashing amber = System degraded Flashing red (1 Hz/cycle per sec) = System critical**
3	NIC status LED*	Solid green = Link to network Flashing green (1 Hz/cycle per sec) = Network active Off = No network activity
4	UID button/LED*	Solid blue = Activated Flashing blue: • 1 Hz/cycle per sec = Remote management or firmware upgrade in progress • 4 Hz/cycle per sec = iLO manual reboot sequence initiated • 8 Hz/cycle per sec = iLO manual reboot sequence in progress Off = Deactivated

*When all four LEDs described in this table flash simultaneously, a power fault has occurred. For more information, see " Power fault LEDs."

**If the health LED indicates a degraded or critical state, review the system IML or use iLO to review the system health status.

†Facility power is not present, power cord is not attached, no power supplies are installed, power supply failure has occurred, or the power button cable is disconnected.

LFF 12-drive model front panel LEDs and button

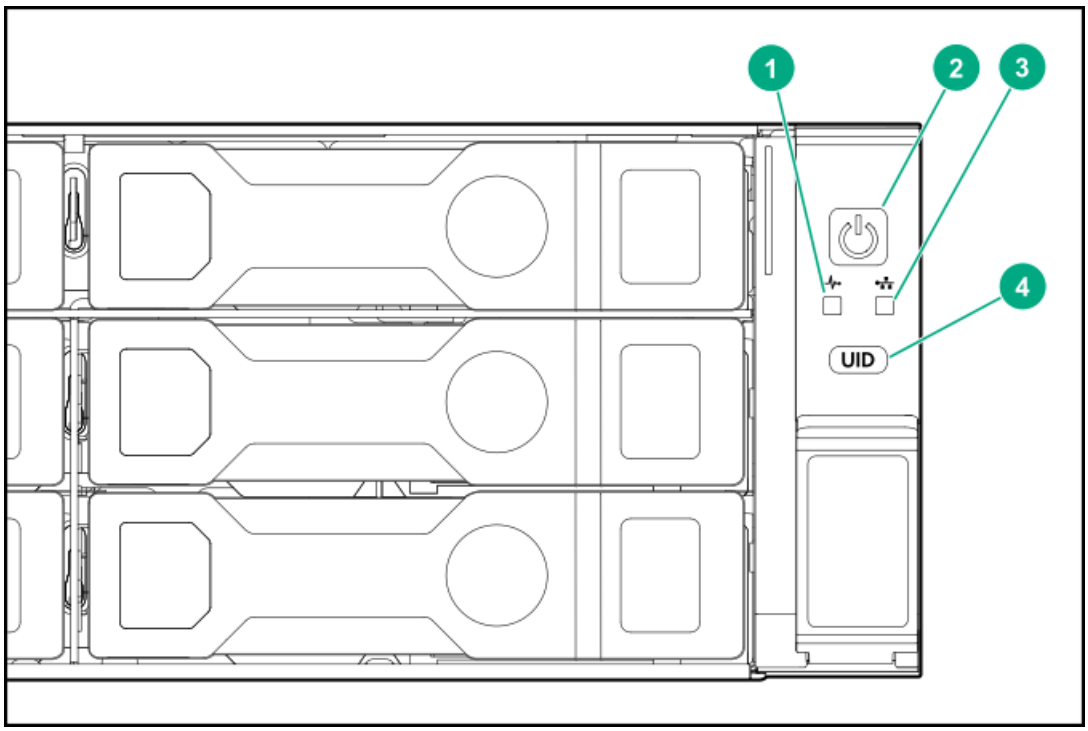

Item	Description	Status
1	Health LED*	Solid green = Normal Flashing green (1 Hz/cycle per sec) = iLO is rebooting Flashing amber = System degraded Flashing red (1 Hz/cycle per sec) = System critical**
2	Power On/Standby button and system power LED*	Solid green = System on Flashing green (1 Hz/cycle per sec) = Performing power on sequence Solid amber = System in standby Off = No power present†
3	NIC status LED*	Solid green = Link to network Flashing green (1 Hz/cycle per sec) = Network active Off = No network activity

Item	Description	Status
4	UID button/LED*	Solid blue = Activated Flashing blue: • 1 Hz/cycle per sec = Remote management or firmware upgrade in progress • 4 Hz/cycle per sec = iLO manual reboot sequence initiated • 8 Hz/cycle per sec = iLO manual reboot sequence in progress Off = Deactivated

*When all four LEDs described in this table flash simultaneously, a power fault has occurred. For more information, see " Power fault LEDs."

**If the health LED indicates a degraded or critical state, review the system IML or use iLO to review the system health status.

†Facility power is not present, power cord is not attached, no power supplies are installed, power supply failure has occurred, or the power button cable is disconnected.

LFF power switch module LEDs and button

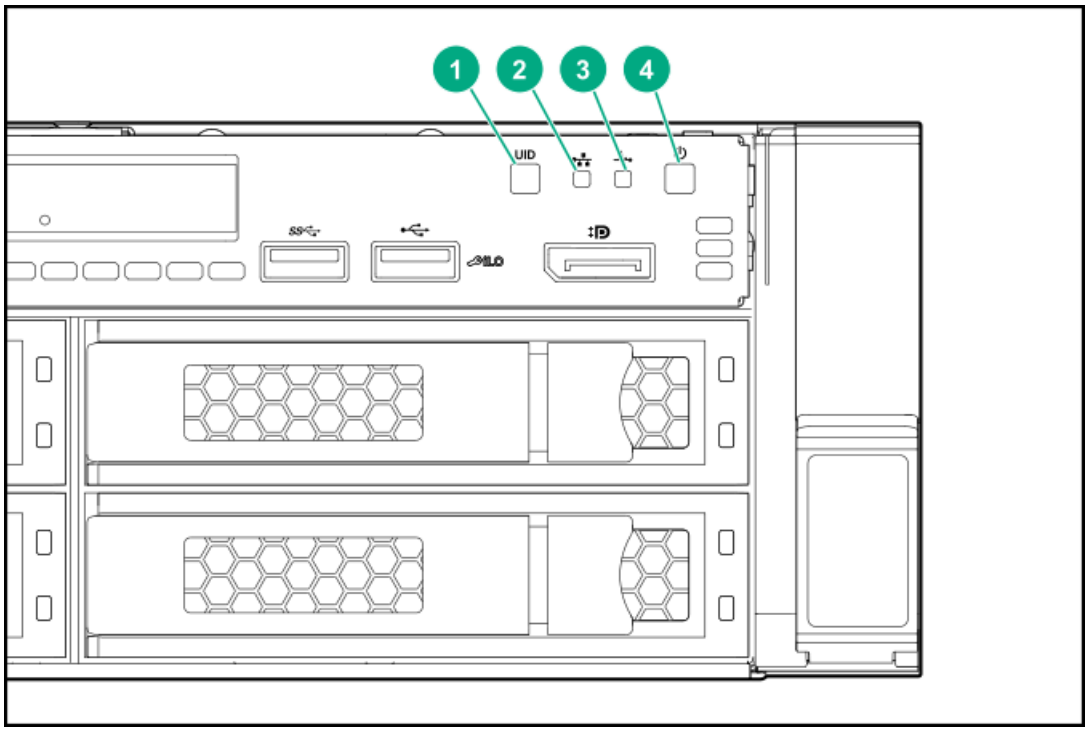

Item	Description	Status
1	UID button/LED*	Solid blue = Activated Flashing blue: • 1 Hz/cycle per sec = Remote management or firmware upgrade in progress • 4 Hz/cycle per sec = iLO manual reboot sequence initiated • 8 Hz/cycle per sec = iLO manual reboot sequence in progress Off = Deactivated

Item	Description	Status
2	NIC status LED*	Solid green = Link to network Flashing green (1 Hz/cycle per sec) = Network active Off = No network activity
3	Health LED*	Solid green = Normal Flashing green (1 Hz/cycle per sec) = iLO is rebooting Flashing amber = System degraded Flashing red (1 Hz/cycle per sec) = System critical**
4	Power On/Standby button and system power LED*	Solid green = System on Flashing green (1 Hz/cycle per sec) = Performing power on sequence Solid amber = System in standby Off = No power present†

*When all four LEDs described in this table flash simultaneously, a power fault has occurred. For more information, see " Power fault LEDs."

**If the health LED indicates a degraded or critical state, review the system IML or use iLO to review the system health status.

†Facility power is not present, power cord is not attached, no power supplies are installed, power supply failure has occurred, or the power button cable is disconnected.

UID button functionality

The UID button can be used to display the Server Health Summary when the server will not power on. For more information, see the latest HPE iLO 5 User Guide on the **Hewlett Packard Enterprise website**.

Front panel LED power fault codes

The following table provides a list of power fault codes, and the subsystems that are affected. Not all power faults are used by all servers.

Subsystem	LED behavior
System board	1 flash
Processor	2 flashes
Memory	3 flashes
Riser board PCIe slots	4 flashes
FlexibleLOM	5 flashes
Storage controllers	6 flashes
System board PCIe slots	7 flashes
Power backplane or storage backplane	8 flashes
Power supply	9 flashes

Systems Insight Display LEDs

The Systems Insight Display LEDs represent the system board layout. The display enables diagnosis with the access panel installed.

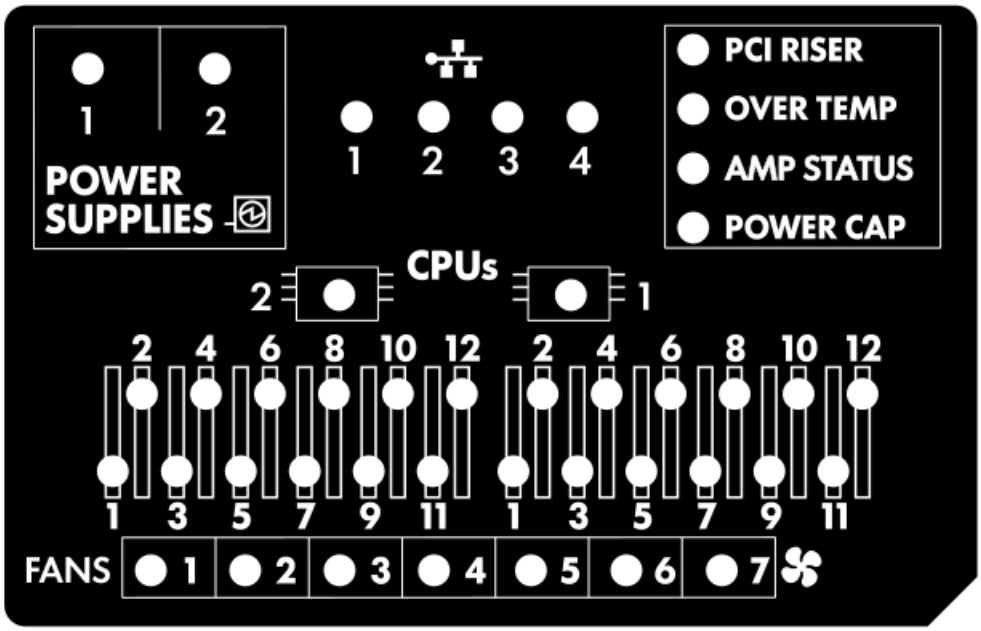

Description	Status
Processor LEDs	Off = Normal Amber = Failed processor
DIMM LEDs	Off = Normal Amber = Failed DIMM or configuration issue
Fan LEDs	Off = Normal Amber = Failed fan or missing fan
NIC LEDs [1]	Off = No link to network Solid green = Network link Flashing green = Network link with activity If power is off, the front panel LED is not active. For status, see Rear panel LEDs.
Power supply LEDs	Off = Normal Solid amber = Power subsystem degraded, power supply failure, or input power lost.
PCI riser LED	Off = Normal Amber = Incorrectly installed PCI riser cage
Over temp LED	Off = Normal Amber = High system temperature detected
Amp Status LED	Off = AMP modes disabled Solid green = AMP mode enabled Solid amber = Failover Flashing amber = Invalid configuration

Description	Status
Power cap LED	Off = System is in standby, or no cap is set. Solid green = Power cap applied

[1] For Networking Choice server models, the embedded NIC ports are not equipped on the server. Therefore, the NIC LEDs on the Systems Insight Display will flash based on the FlexibleLOM network port activity. In the case of a dual-port FlexibleLOM, only NIC LED 1 and 2 will illuminate to correspond with the activity of the respective network ports.

When the health LED on the front panel illuminates either amber or red, the server is experiencing a health event. For more information on the combination of these LEDs, see Systems Insight Display combined LED descriptions).

Systems Insight Display combined LED descriptions

The combined illumination of the following LEDs indicates a system condition:

- Systems Insight Display LEDs
- System power LED
- Health LED

Systems Insight Display LED and color	Health LED	System power LED	Status
Processor (amber)	Red	Amber	One or more of the following conditions might exist: • Processor in socket X has failed. • Processor X is not installed in the socket. • Processor X is unsupported. • ROM detects a failed processor during POST.
Processor (amber)	Amber	Green	Processor in socket X is in a pre-failure condition.
DIMM (amber)	Red	Green	One or more DIMMs have failed.
DIMM (amber)	Amber	Green	DIMM in slot X is in a pre-failure condition.
Over temp (amber)	Amber	Green	The Health Driver has detected a cautionary temperature level.
Over temp (amber)	Red	Amber	The server has detected a hardware critical temperature level.
PCI riser (amber)	Red	Green	The PCI riser cage is not seated properly.
Fan (amber)	Amber	Green	One fan has failed or has been removed.
Fan (amber)	Red	Green	Two or more fans have failed or been removed.
Power supply (amber)	Red	Amber	One or more of the following conditions might exist: • Only one power supply is installed and that power supply is in standby. • Power supply fault. • System board fault.
Power supply (amber)	Amber	Green	One or more of the following conditions might exist: • Redundant power supply is installed and only one power supply is functional. • AC power cord is not plugged into redundant power supply. • Redundant power supply fault. • Power supply mismatch at POST or power supply mismatch through hot-plug addition.
Power cap (off)	—	Amber	Standby.

Systems Insight Display LED and color	Health LED	System power LED	Status
Power cap (green)	—	Flashing green	Waiting for power.
Power cap (green)	—	Green	Power is available.
Power cap (flashing amber)	—	Amber	Power is not available.

IMPORTANT: If more than one DIMM slot LED is illuminated, further troubleshooting is required. Test each bank of DIMMs by removing all other DIMMs. Isolate the failed DIMM by replacing each DIMM in a bank with a known working DIMM.

Rear panel components

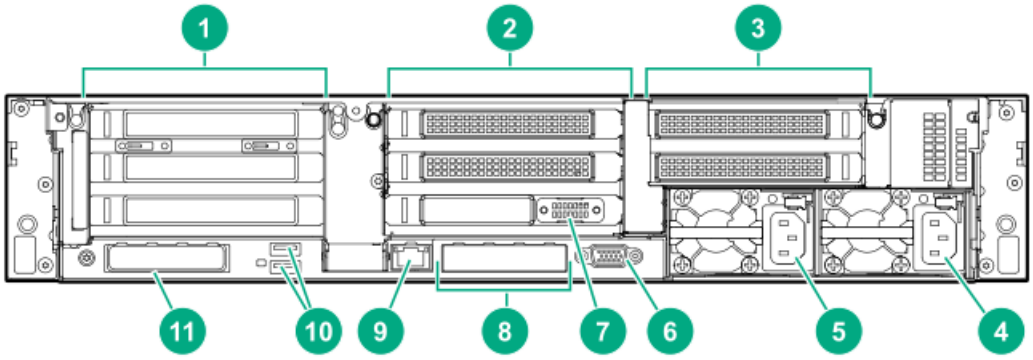

Item	Description
1	Primary riser slots 1-3 (Optional drive cage)
2	Optional riser slots 4-6 (Optional drive cage)
3	Optional riser slots 7-8 (Optional drive cage)
4	Power supply 1
5	Power supply 2
6	Video port
7	Serial port (optional)*
8	1Gb RJ-45 ports 1–4 (if equipped)
9	iLO management port
10	USB 3.0 ports
11	FlexibleLOM slot

*When a tertiary riser cage is installed as shown, the serial port can be installed in riser slot 6.

Rear panel LEDs

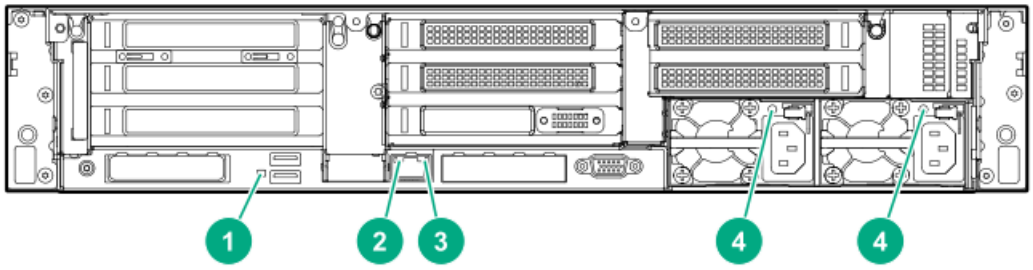

Item	Description	Status
1	UID LED	Off = Deactivated Solid blue = Activated Flashing blue = System being managed remotely
2	Link LED	Off = No network link Green = Network link
3	Activity LED	Off = No network activity Solid green = Link to network Flashing green = Network activity
4	Power supply LEDs	Off = System is off or power supply has failed. Solid green = Normal

System board components

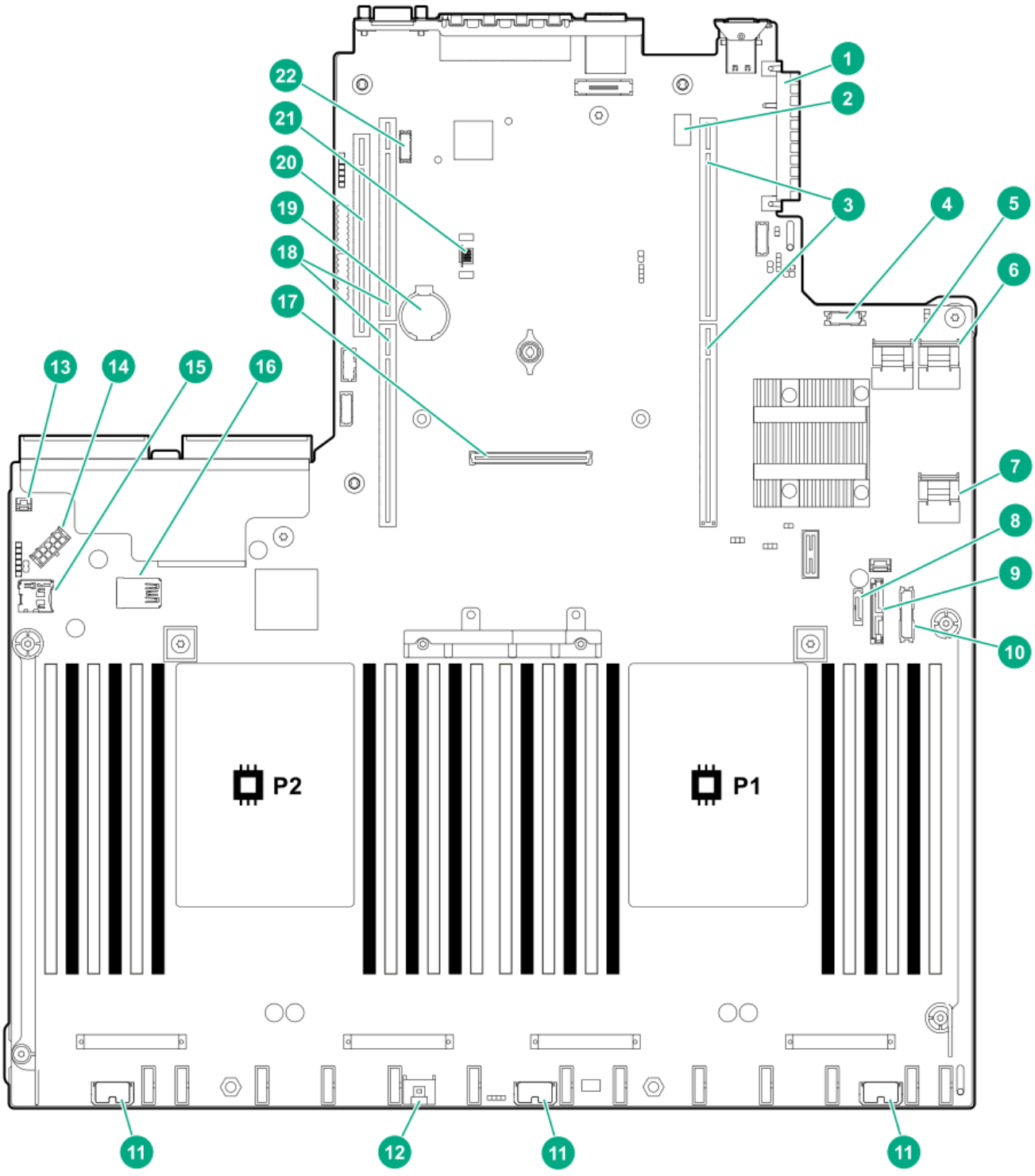

Item	Description
1	FlexibleLOM connector
2	System maintenance switch
3	Primary PCIe riser connector
4	Front display port/USB 2.0 connector
5	x4 SATA port 1
6	x4 SATA port 2
7	x2 SATA port 3

Item	Description
8	x1 SATA port 4
9	Optical disk drive/SATA port 5
10	Power switch/SID module connector
11	Drive backplane power connectors
12	Energy pack connector
13	Chassis intrusion detection connector
14	Drive backplane power connector
15	microSD card slot
16	Dual internal USB 3.0 ports
17	Type-a Smart Array connector
18	Secondary PCIe riser connector*
19	System battery
20	Tertiary PCIe riser connector*
21	TPM connector
22	Serial port connector (optional)

* Requires a second processor

System maintenance switch descriptions

Position	Default	Function
S1 [1]	Off	Off = iLO security is enabled. On = iLO security is disabled.
S2	Off	Reserved
S3	Off	Reserved
S4	Off	Reserved
S5 [1]	Off	Off = Power-on password is enabled. On = Power-on password is disabled.
S6 [1], [2], [3]	Off	Off = No function On = Restore default manufacturing settings
S7	Off	Reserved
S8	—	Reserved
S9	—	Reserved
S10	—	Reserved
S11	—	Reserved
S12	—	Reserved

[1] To access the redundant ROM, set S1, S5, and S6 to On.
[2] When the system maintenance switch position 6 is set to the On position, the system is prepared to restore all configuration settings to their manufacturing defaults.
[3] When the system maintenance switch position 6 is set to the On position and Secure Boot is enabled, some configurations cannot be restored.
For more information, see Secure Boot.

DIMM label identification

To determine DIMM characteristics, see the label attached to the DIMM. The information in this section helps you to use the label to locate specific information about the DIMM.

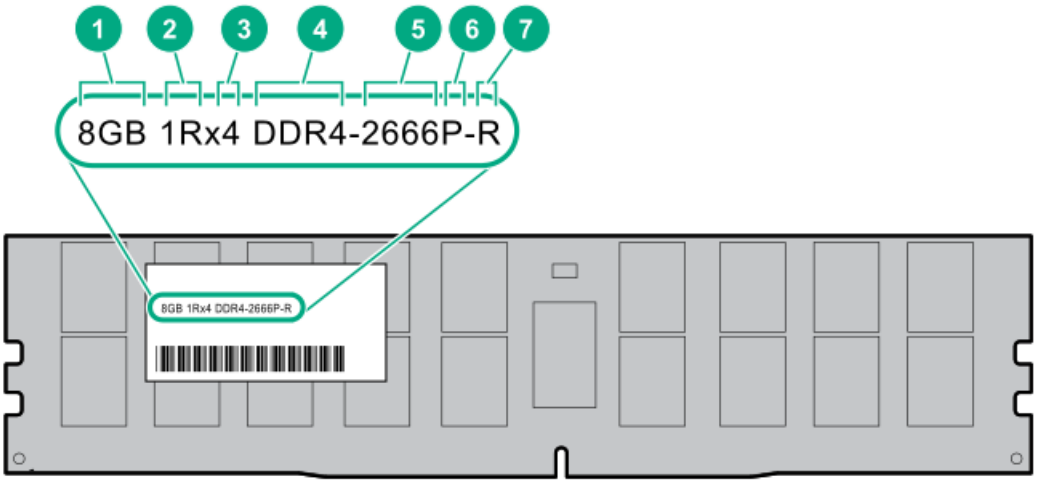

Item	Description	Example
1	Capacity	8 GB 16 GB 32 GB 64 GB 128 GB
2	Rank	1R = Single rank 2R = Dual rank 4R = Quad rank 8R = Octal rank
3	Data width on DRAM	x4 = 4-bit x8 = 8-bit x16 = 16-bit
4	Memory generation	PC4 = DDR4
5	Maximum memory speed	2133 MT/s 2400 MT/s 2666 MT/s 2933 MT/s

Item	Description	Example
6	CAS latency	P = CAS 15-15-15
		T = CAS 17-17-17
		U = CAS 20-18-18
		V = CAS 19-19-19 (for RDIMM, LRDIMM)
		V = CAS 22-19-19 (for 3DS TSV LRDIMM)
		Y = CAS 21-21-21 (for RDIMM, LRDIMM)
		Y = CAS 24-21-21 (for 3DS TSV LRDIMM)
7	DIMM type	R = RDIMM (registered)
		L = LRDIMM (load reduced)
		E = Unbuffered ECC (UDIMM)

For more information about product features, specifications, options, configurations, and compatibility, see the HPE DDR4 SmartMemory QuickSpecs on the Hewlett Packard Enterprise website (**https://www.hpe.com/support/DDR4SmartMemoryQS**).

DIMM slot locations

DIMM slots are numbered sequentially (1 through 12) for each processor.

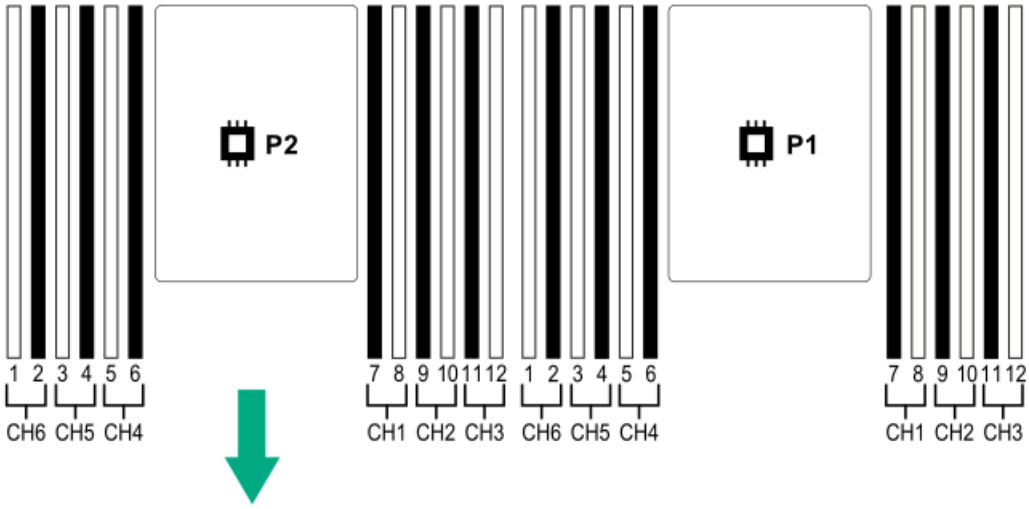

NVDIMM identification

NVDIMMs are supported only when first-generation Intel Xeon Scalable processors are installed on the server.

NVDIMM boards are blue instead of green. This change to the color makes it easier to distinguish NVDIMMs from DIMMs.

To determine NVDIMM characteristics, see the full product description as shown in the following example:

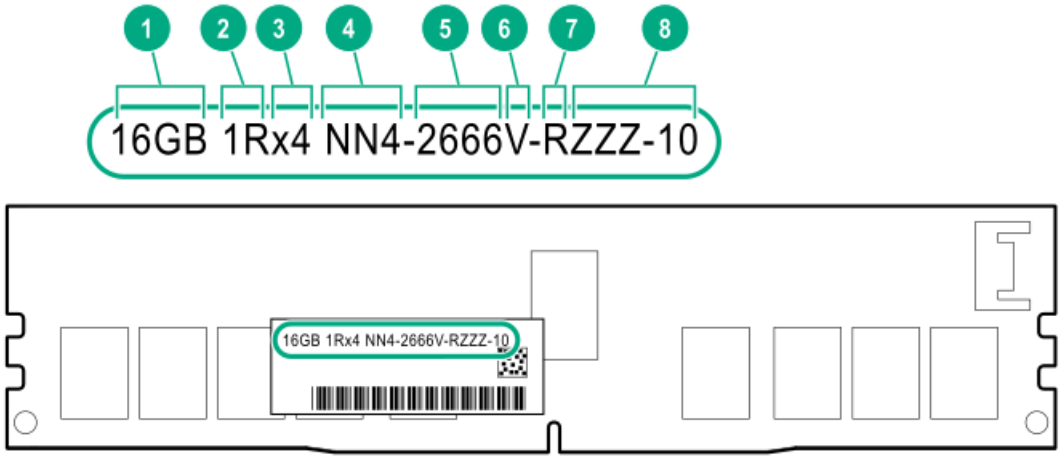

Item	Description	Definition
1	Capacity	16 GiB
2	Rank	1R (Single rank)
3	Data width per DRAM chip	x4 (4 bit)
4	Memory type	NN4=DDR4 NVDIMM-N
5	Maximum memory speed	2667 MT/s
6	Speed grade	V (latency 19-19-19)
7	DIMM type	RDIMM (registered)
8	Other	—

For more information about NVDIMMs, see the product QuickSpecs on the Hewlett Packard Enterprise website (**https://www.hpe.com/info/qs**).

NVDIMM 2D Data Matrix barcode

The 2D Data Matrix barcode is on the right side of the NVDIMM label and can be scanned by a cell phone or other device.

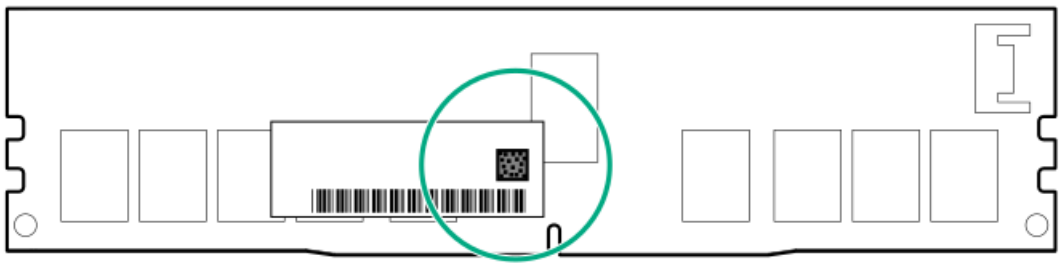

When scanned, the following information from the label can be copied to your cell phone or device:

- (P) is the module part number.
- (L) is the technical details shown on the label.
- (S) is the module serial number.

Example: (P)HMN82GR7AFR4N-VK (L)16GB 1Rx4 NN4-2666V-RZZZ-10(S)80AD-01-1742-11AED5C2

NVDIMM LED identification

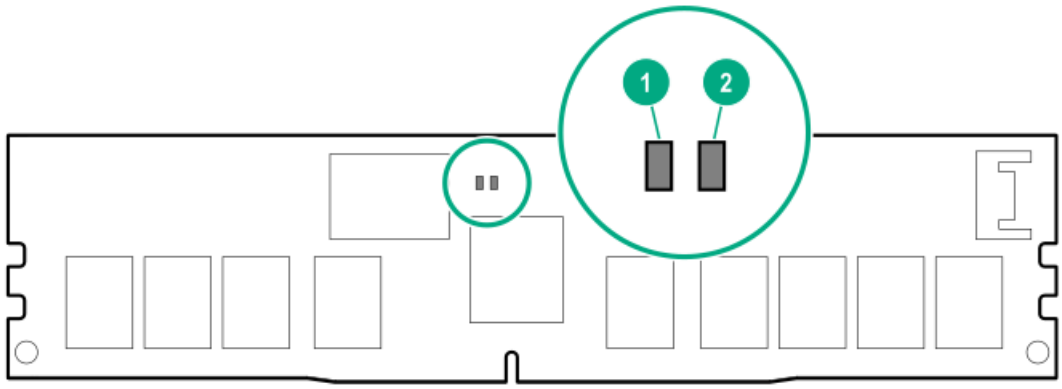

Item	LED description	LED color
1	Power LED	Green
2	Function LED	Blue

NVDIMM-N LED combinations

State	Definition	NVDIMM-N Power LED (green)	NVDIMM-N Function LED (blue)
0	AC power is on (12V rail) but the NVM controller is not working or not ready.	On	Off
1	AC power is on (12V rail) and the NVM controller is ready.	On	On
2	AC power is off or the battery is off (12V rail off).	Off	Off
3	AC power is on (12V rail) or the battery is on (12V rail) and the NVDIMM-N is active (backup and restore).	On	Flashing

NVDIMM Function LED patterns

For the purpose of this table, the NVDIMM-N LED operates as follows:

- Solid indicates that the LED remains in the on state.
- Flashing indicates that the LED is on for 2 seconds and off for 1 second.
- Fast-flashing indicates that the LED is on for 300 ms and off for 300 ms.

State	Definition	NVDIMM-N Function LED
0	The restore operation is in progress.	Flashing
1	The restore operation is successful.	Solid or On
2	Erase is in progress.	Flashing
3	The erase operation is successful.	Solid or On
4	The NVDIMM-N is armed, and the NVDIMM-N is in normal operation.	Solid or On
5	The save operation is in progress.	Flashing
6	The NVDIMM-N finished saving and battery is still turned on (12 V still powered).	Solid or On
7	The NVDIMM-N has an internal error or a firmware update is in progress. For more information about an NVDIMM-N internal error, see the IML.	Fast-flashing

Intel Optane persistent memory 100 series for HPE label identification

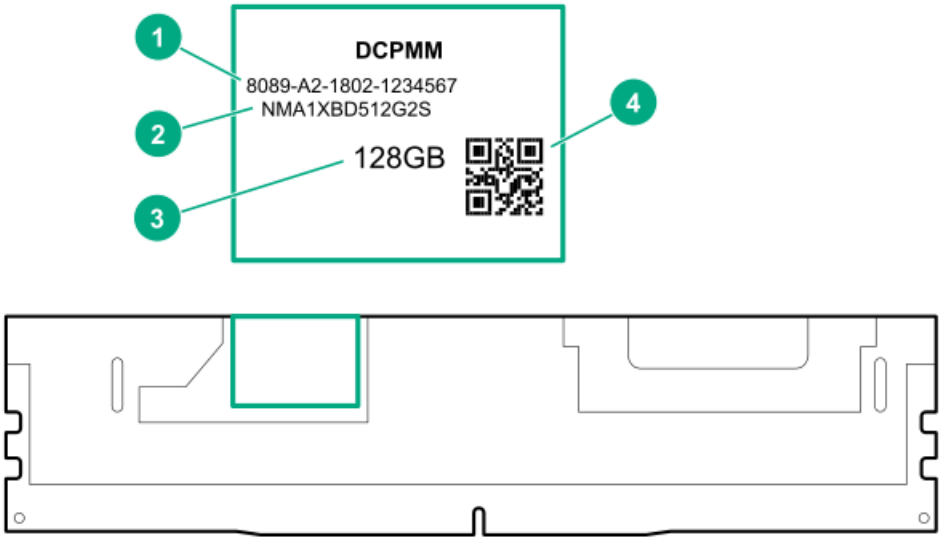

Item	Description	Example
1	Unique ID number	8089-A2-1802-1234567
2	Model number	NMA1XBD512G2S
3	Capacity	128 GB 256 GB 512 GB
4	QR code	Includes part number and serial number

For more information about product features, specifications, options, configurations, and compatibility, see the product QuickSpecs on the Hewlett Packard Enterprise website (**https://www.hpe.com/support/persistentmemoryQS**).

Processor, heatsink, and socket components

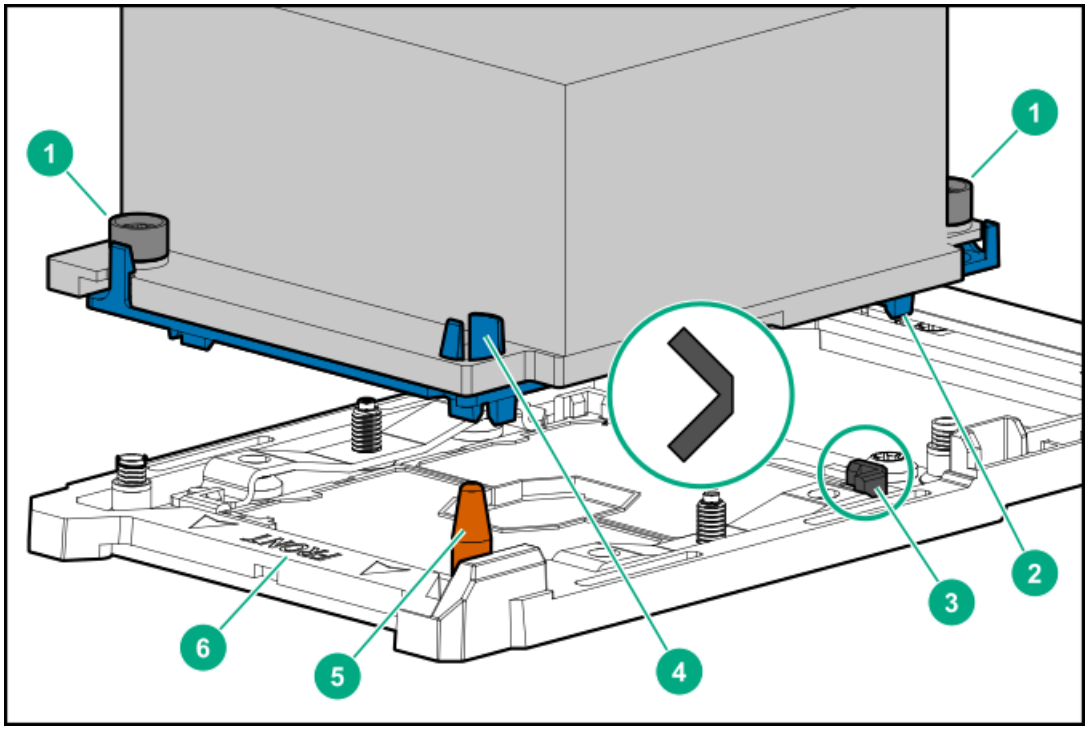

Item	Description
1	Heatsink nuts
2	Processor carrier
3	Pin 1 indicator [1]
4	Heatsink guide/keying feature
5	Alignment post
6	Heatsink keying frame

[1] Symbol also on the processor and frame.

Drives

SAS/SATA drive components and LEDs

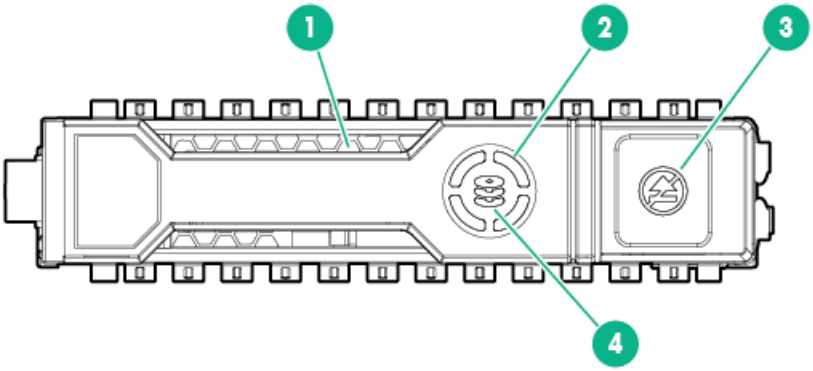

Item	Description	Status
1	Locate	• Solid blue = The drive is being identified by a host application. • Flashing blue = The drive carrier firmware is being updated or requires an update.
2	Activity ring LED	• Rotating green = Drive activity. • Off = No drive activity.
3	Do not remove LED	• Solid white = Do not remove the drive. Removing the drive causes one or more of the logical drives to fail. • Off = Removing the drive does not cause a logical drive to fail.
4	Drive status LED	• Solid green = The drive is a member of one or more logical drives. • Flashing green = The drive is rebuilding or performing a RAID migration, strip size migration, capacity expansion, or logical drive extension, or is erasing. • Flashing amber/green = The drive is a member of one or more logical drives and predicts the drive will fail. • Flashing amber = The drive is not configured and predicts the drive will fail. • Solid amber = The drive has failed. • Off = The drive is not configured by a RAID controller.

Smart Carrier NVMe (SCN) drive LED definitions

The NVMe drive is a PCIe bus device. A device attached to a PCIe bus cannot be removed without allowing the device and bus to complete and cease the signal/traffic flow.

CAUTION: Do not remove an NVMe drive from the drive bay while the Do not remove LED is flashing. The Do not remove LED flashes to indicate that the device is still in use. Removing the NVMe drive before the device has completed and ceased signal/traffic flow can cause loss of data.

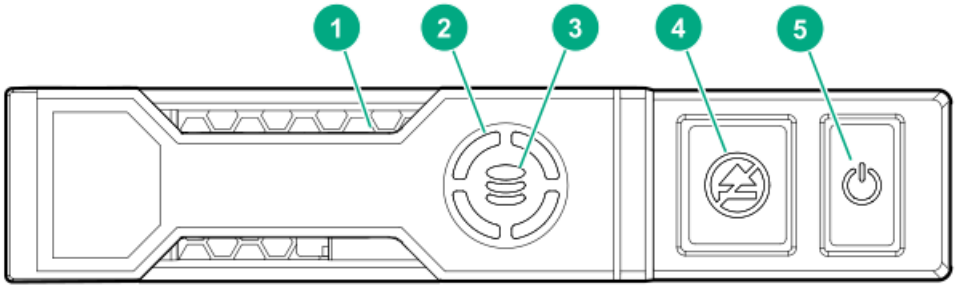

Item	LED	Status	Definition
1	Locate	Solid blue	The drive is being identified by a host application.
		Flashing blue	The drive carrier firmware is being updated or requires an update.
2	Activity ring	Rotating green	Drive activity
		Off	No drive activity
3	Drive status	Solid green	The drive is a member of one or more logical drives.
		Flashing green	The drive is doing one of the following: • Rebuilding • Performing a RAID migration • Performing a stripe size migration • Performing a capacity expansion • Performing a logical drive extension • Erasing
		Flashing amber/green	The drive is a member of one or more logical drives and predicts the drive will fail.
		Flashing amber	The drive is not configured and predicts the drive will fail.
		Solid amber	The drive has failed.
		Off	The drive is not configured by a RAID controller.
4	Do not remove	Solid white	Do not remove the drive. The drive must be ejected from the PCIe bus prior to removal.
		Flashing white	The drive ejection request is pending.
		Off	The drive has been ejected.
5	Power	Solid green	Do not remove the drive. The drive must be ejected from the PCIe bus prior to removal.
		Flashing green	The drive ejection request is pending.
		Off	The drive has been ejected.

uFF drive components and LEDs

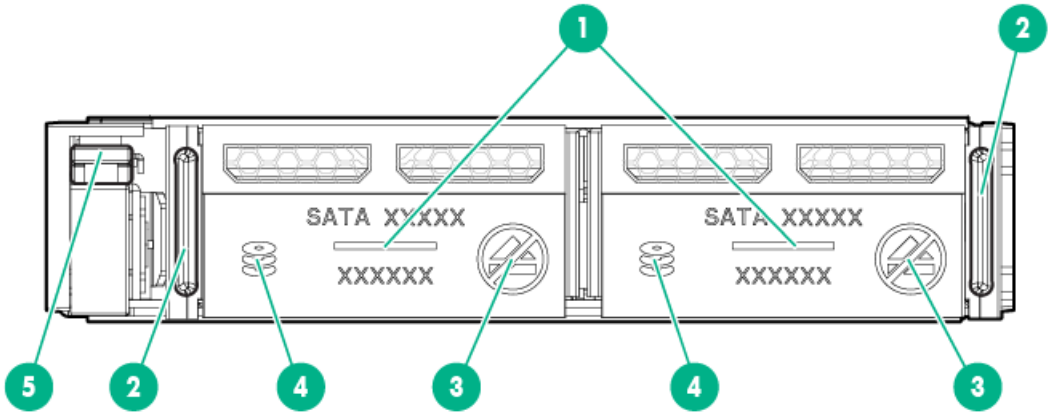

Item	Description	Status
1	Locate	• Off—Normal • Solid blue—The drive is being identified by a host application • Flashing blue—The drive firmware is being updated or requires an update
2	uFF drive ejection latch	Removes the uFF drive when released
3	Do not remove LED	• Off—OK to remove the drive. Removing the drive does not cause a logical drive to fail. • Solid white—Do not remove the drive. Removing the drive causes one or more of the logical drives to fail.
4	Drive status LED	• Off—The drive is not configured by a RAID controller • Solid green—The drive is a member of one or more logical drives • Flashing green (4 Hz)—The drive is operating normally and has activity • Flashing green (1 Hz)—The drive is rebuilding or performing a RAID migration, stripe size migration, capacity expansion, logical drive extension, or is erasing • Flashing amber/green (1 Hz)—The drive is a member of one or more logical drives that predicts the drive will fail • Solid amber—The drive has failed • Flashing amber (1 Hz)—The drive is not configured and predicts the drive will fail
5	Adapter ejection release latch and handle	Removes the SFF flash adapter when released

Fan bay numbering

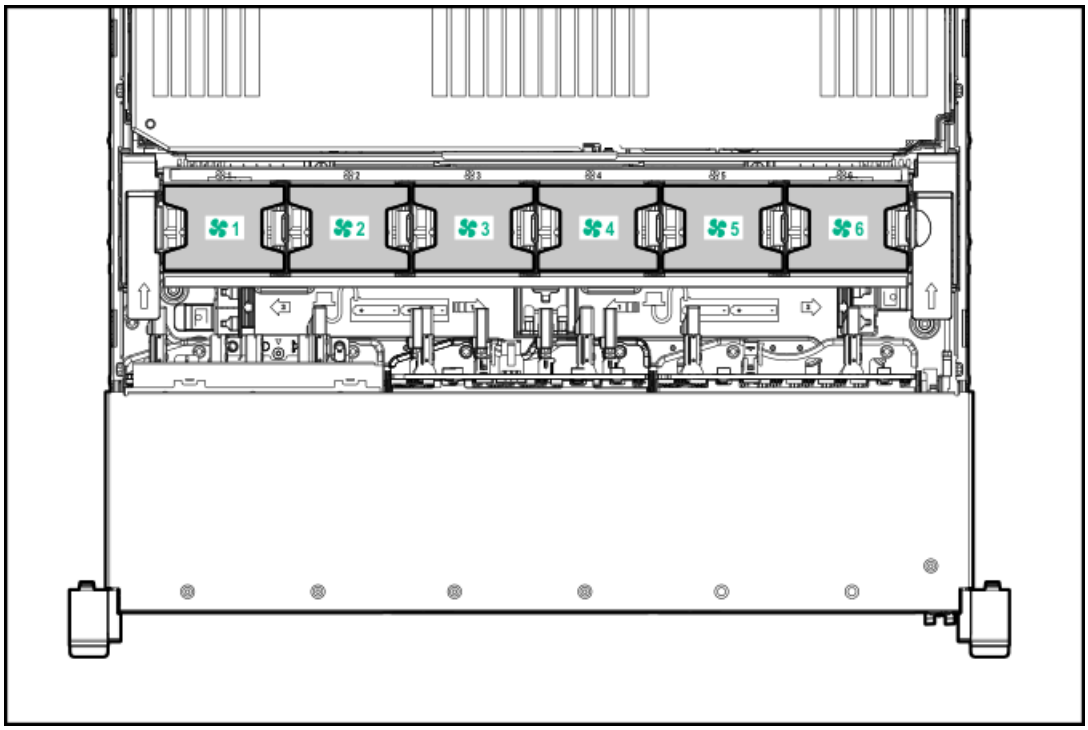

Drive box identification

Front boxes

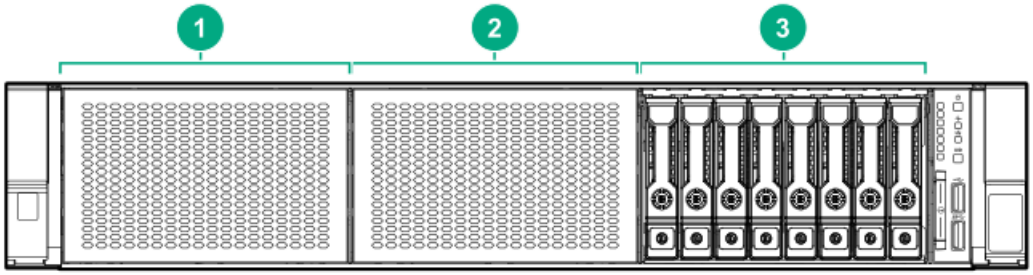

Item	Description
1	Box 1
2	Box 2
3	Box 3

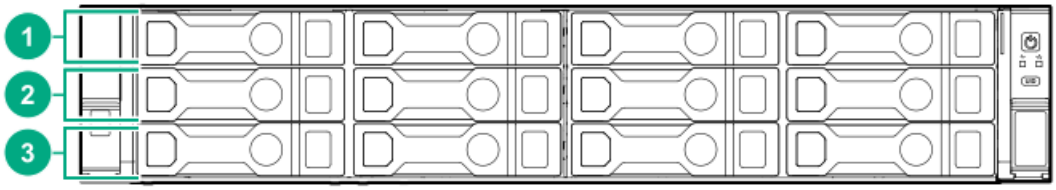

Item	Description
1	Box 1
2	Box 2
3	Box 3

Rear boxes

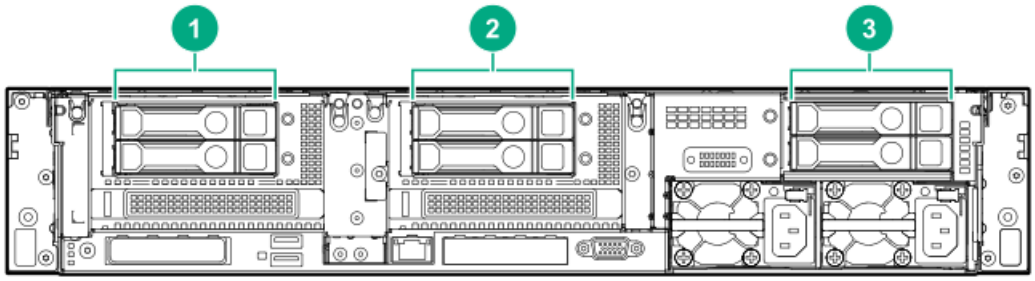

Item	Description
1	Box 4

Item	Description
2	Box 5
3	Box 6

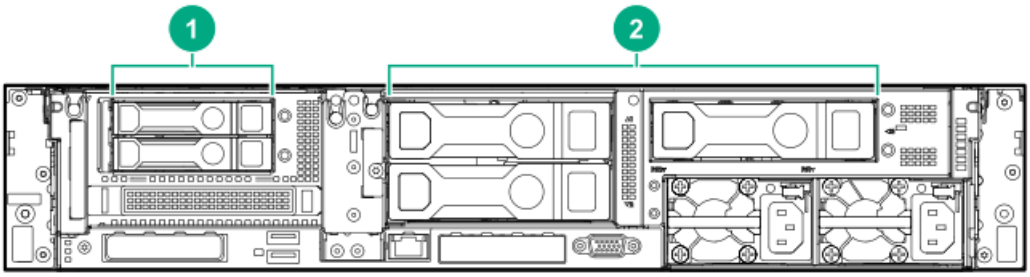

Item	Description
1	Box 4
2	Box 6

Midplane box (LFF only)

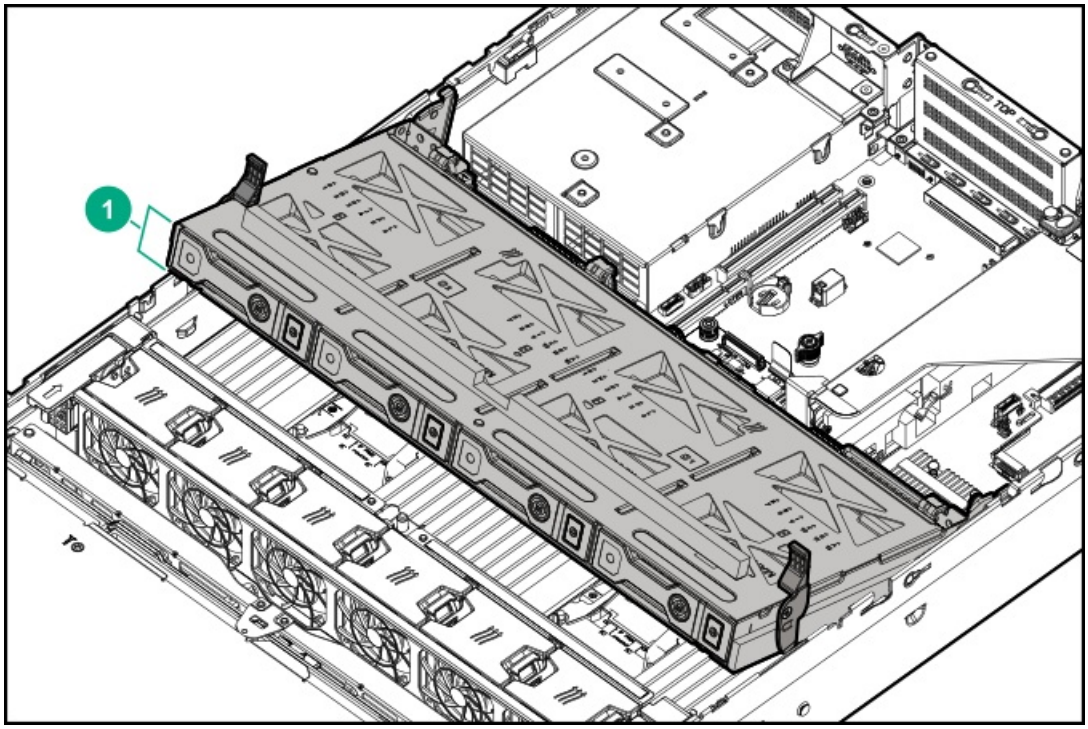

Item	Description
1	Box 7

Drive bay numbering

Drive bay numbering depends on how the drive backplanes are connected:

- To a controller
  - Embedded controllers use the onboard SATA ports.
  - Type-a controllers install to the type-a smart array connector.
  - Type-p controllers install to a PCIe riser.
- To a SAS expander
  Installs in the primary or secondary PCIe riser

Drive bay numbering: Smart Array controller

When the drive backplane is connected directly to a storage controller, then each drive box starts at 1. The following images are examples of common configurations.

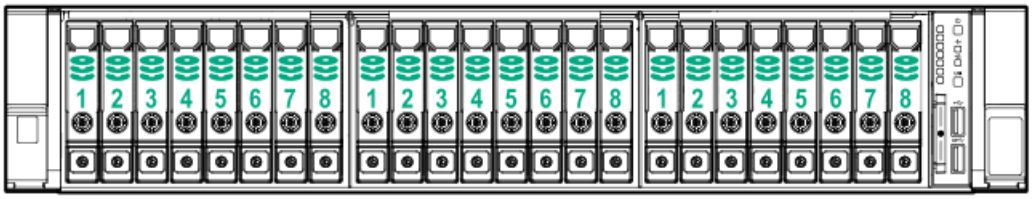

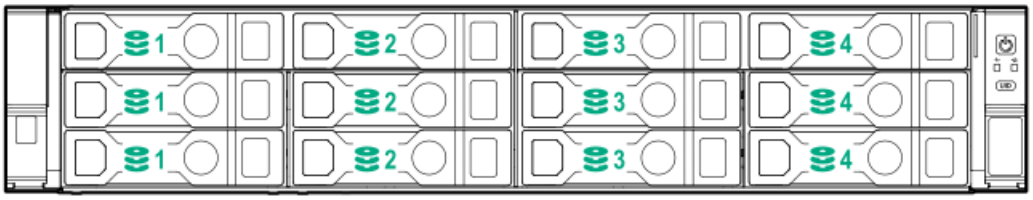

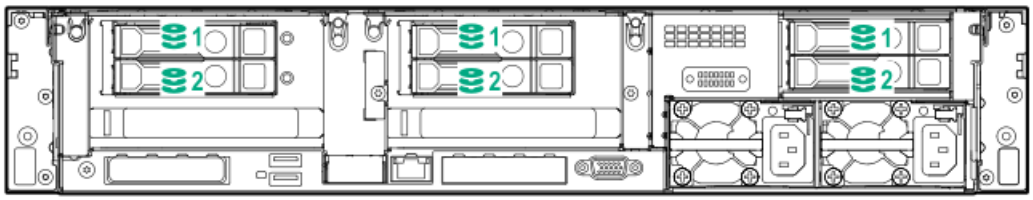

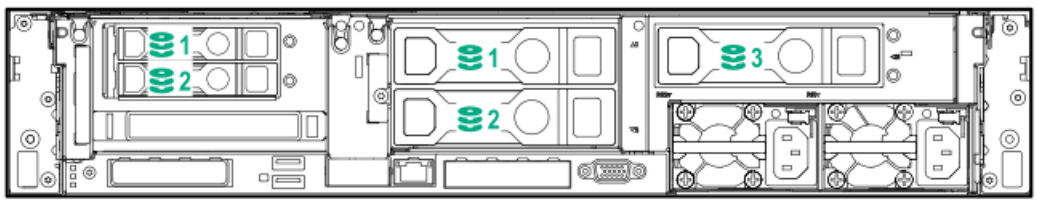

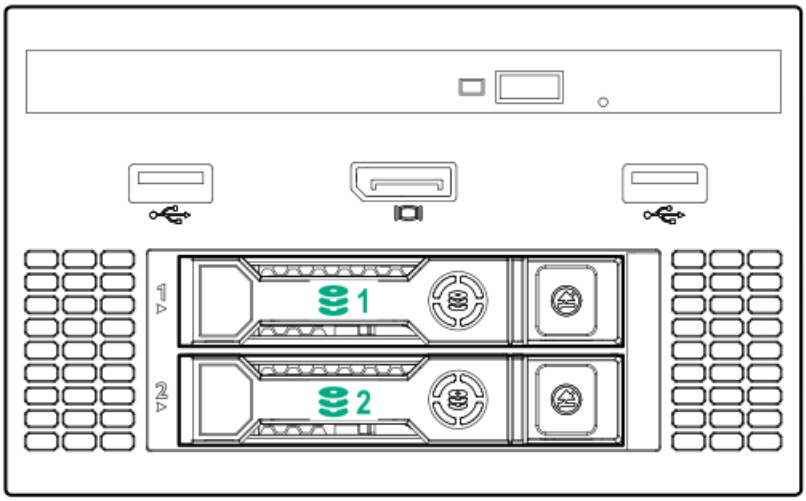
1
2

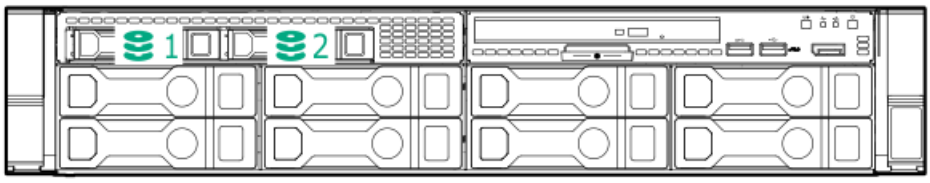
1
2

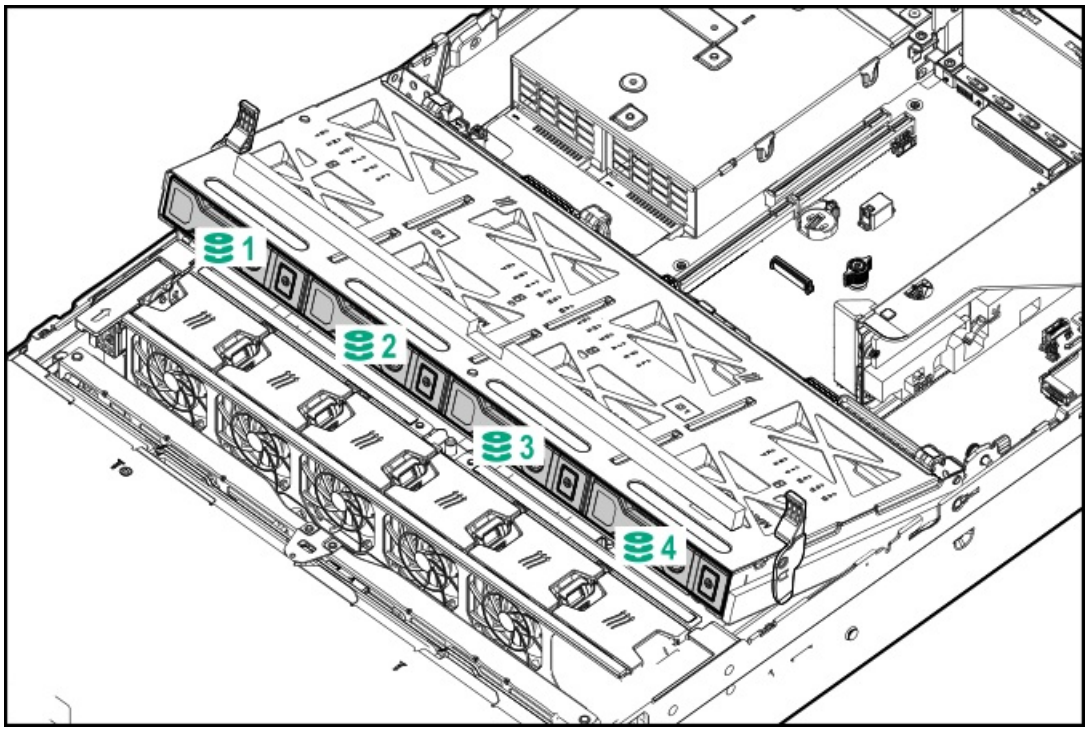
1
2
3
4

Drive bay numbering: SAS expander

Drive numbering through a SAS Expander is continuous.

- SAS expander port 1 always connects to port 1 of the controller.
- SAS expander port 2 always connects to port 2 of the controller.
- SAS expander port 3 = drive numbers 1-4.
- SAS expander port 4 = drive numbers 5-8.
- SAS expander port 5 = drive numbers 9-12.
- SAS expander port 6 = drive numbers 13-16.
- SAS expander port 7 = drive numbers 17-20.
- SAS expander port 8 = drive numbers 21-24.
- SAS expander port 9 = drive numbers 25-28.

Common configuration examples:

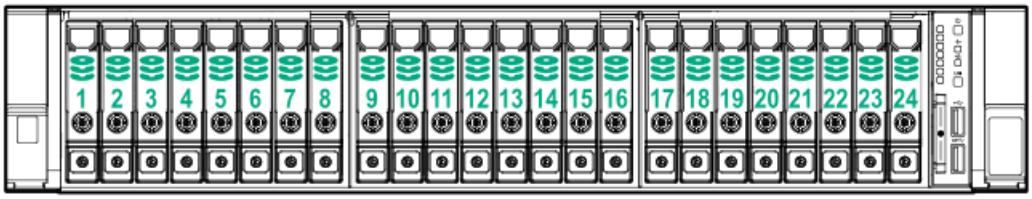

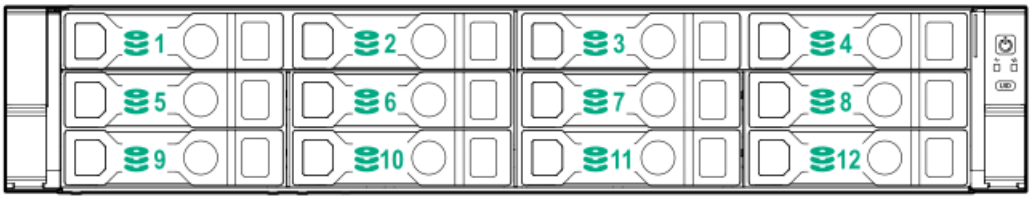

When any stacked 2SFF drive configuration is connected to the SAS expander, the drive numbering skips the second number to allow uFF drive bay numbering.

- Front 2SFF to SAS expander port 3:

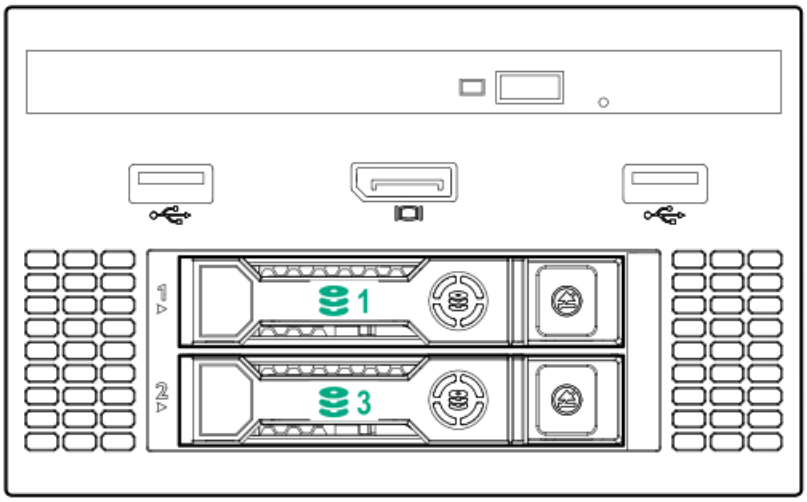

- Rear 2SFF to SAS expander port 9:

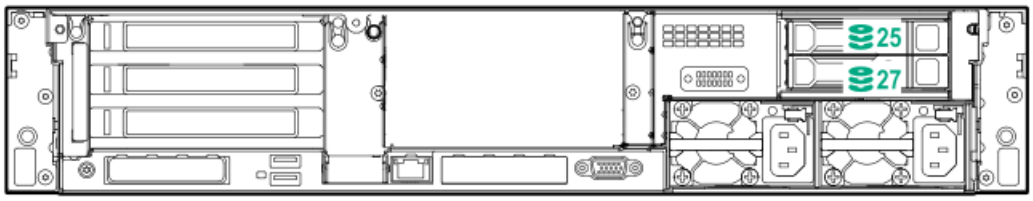

- Front 2SFF side-by-side (unstacked) to SAS expander port 3:

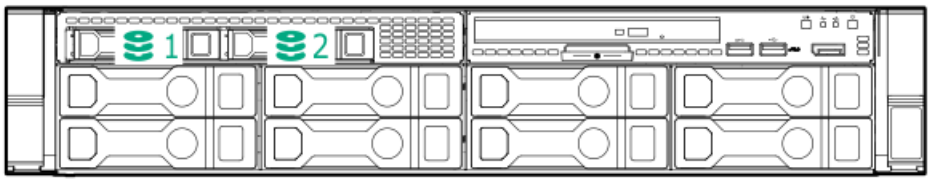

- Rear 3LFF to SAS expander port 9:

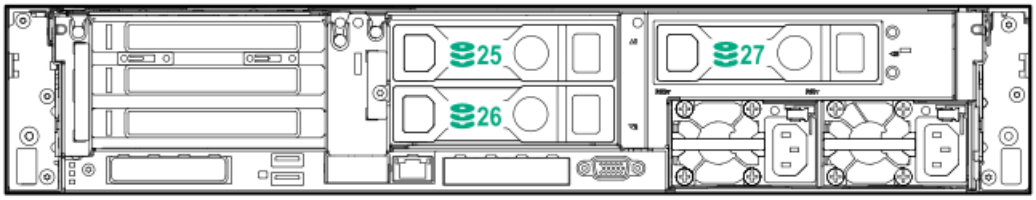

- Mid 4LFF to SAS expander port 6:

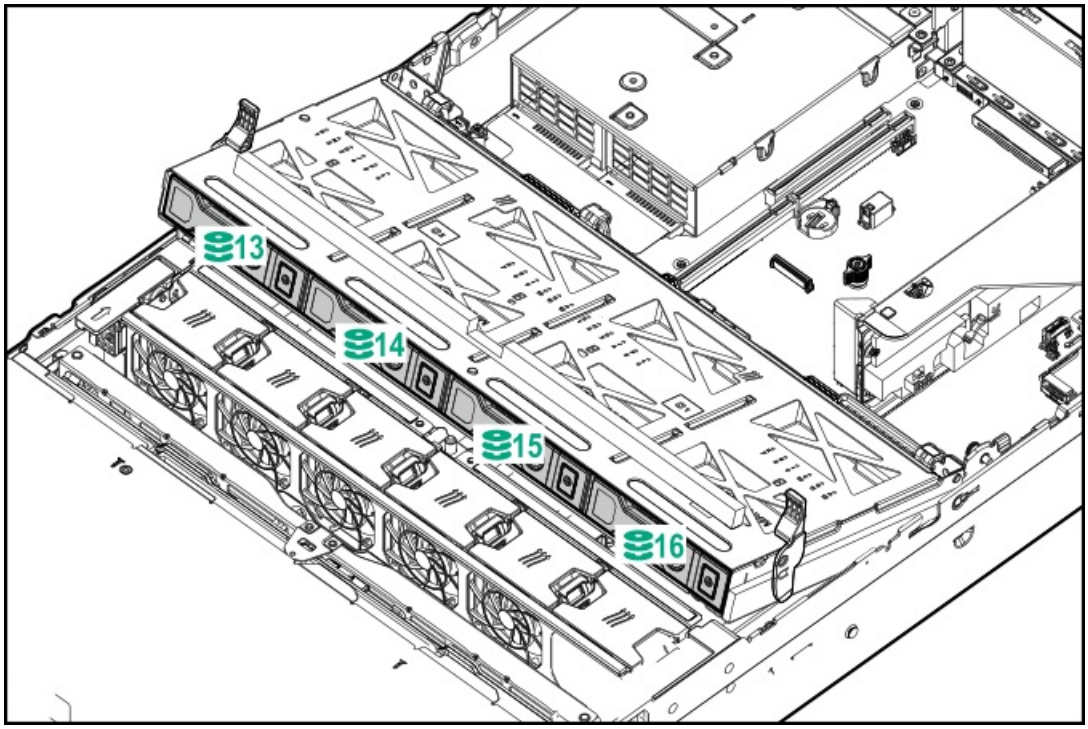

- Front 12LFF + Midplane 4LFF + All rear 2SFF:

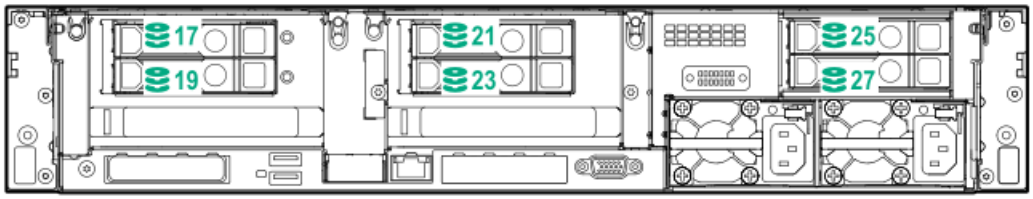

Drive bay numbering: NVMe drives

If the server is populated with NVMe drives and NVMe risers:

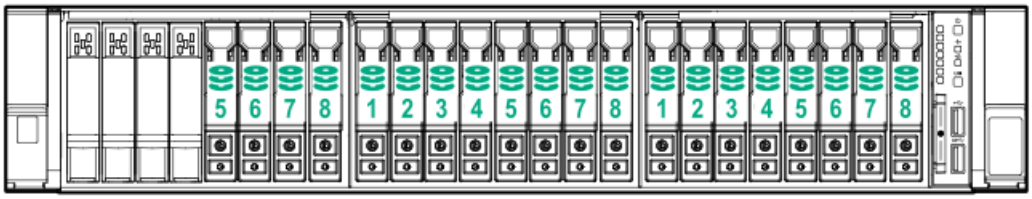

uFF drive bay numbering

There are two uFF drives in each drive carrier.

If the drives are connected to a controller:

- The left bay = The default bay number of the server
- The right bay = The default bay number of the server + 100

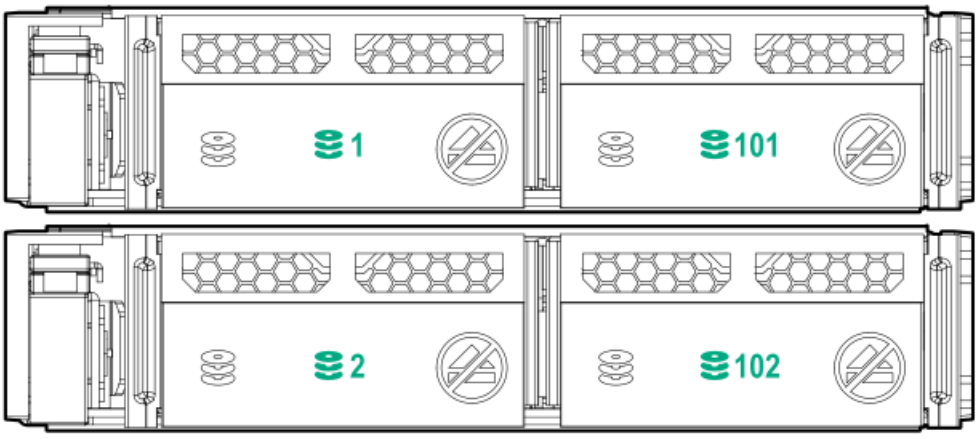

If the drives are connected to a SAS expander:

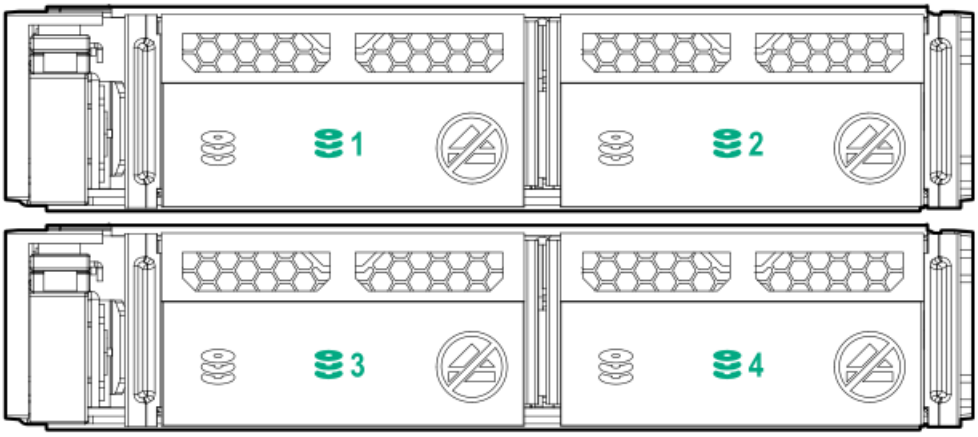

For example:

- If the drives are connected to port 3 of the SAS expander, then the uFF drives are 1-4.
- If the drives are connected to port 9 of the SAS expander, then the uFF drives are 25-28.

Riser components

4-port NVMe Slimline riser

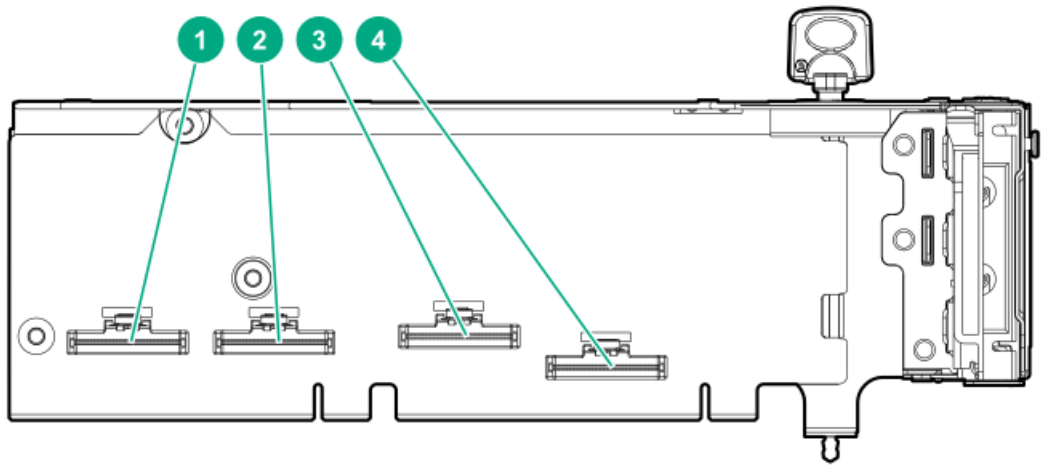

Item	Description
1–4	x8 Slimline NVMe connectors

Three-slot with NVMe Slimline riser

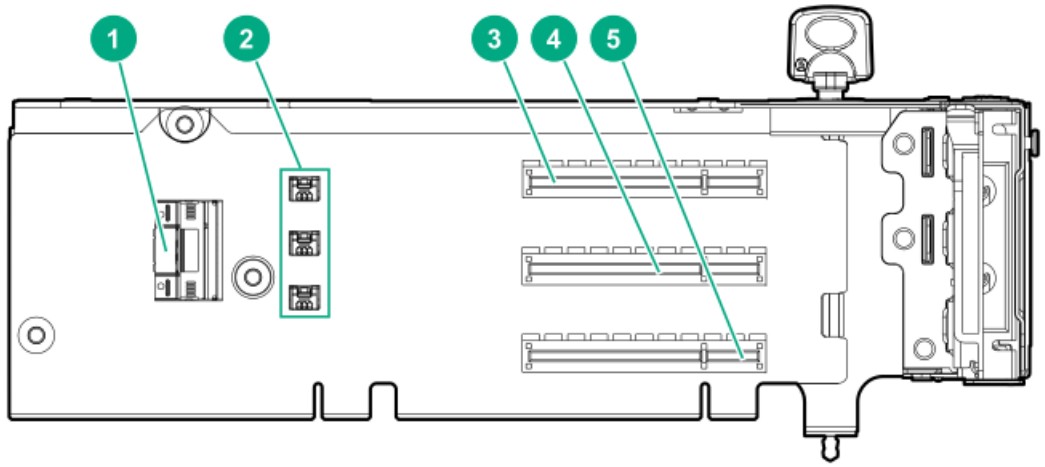

Item	Description
1	x8 Slimline NVMe connector
2	Controller backup power connectors (3)
3–5	x8 PCIe slots

Three-slot with M.2 riser

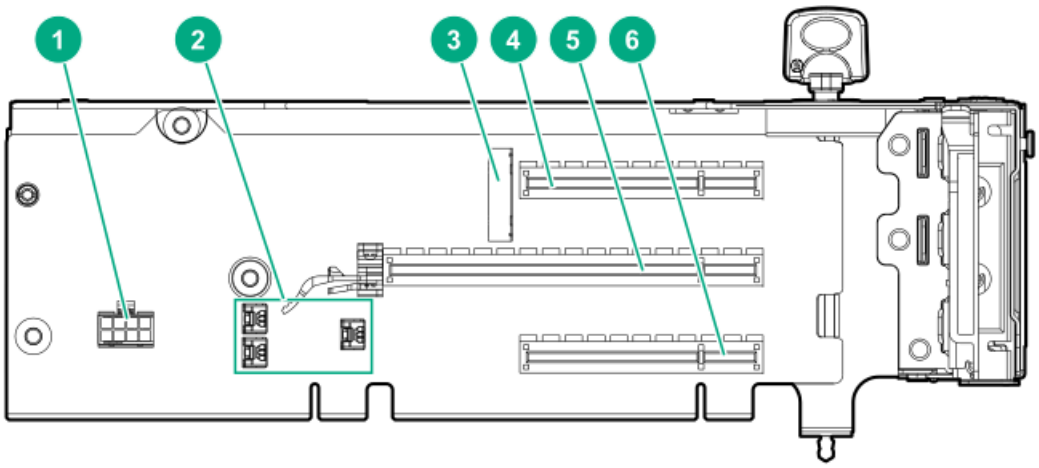

Item	Description
1	GPU power cable connector
2	Controller backup power connectors (3)
3	M.2 SSD drive connectors [1]
4	x8 PCIe slot
5	x16 PCIe slot
6	x8 PCIe slot

[1] The riser supports installation of a second M.2 SSD drive on the reverse side.

Three-slot GPU riser

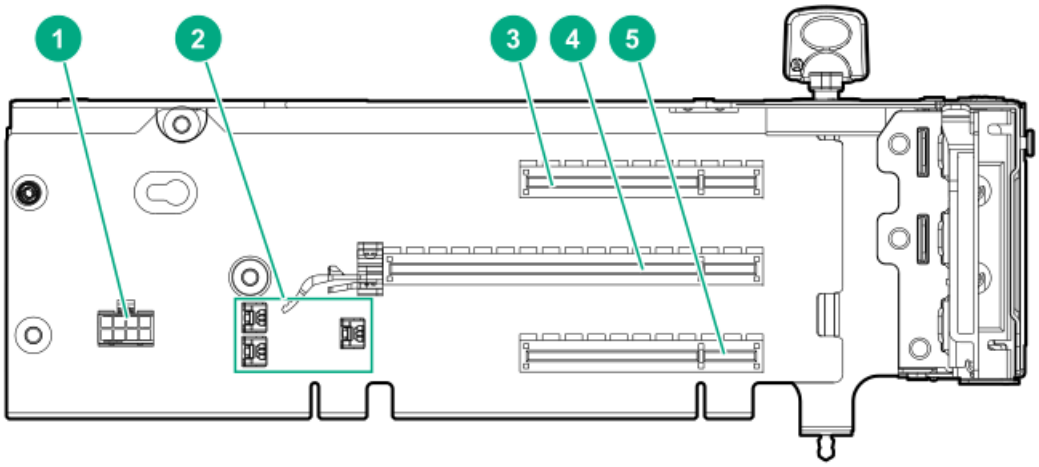

Item	Description
1	GPU power cable connector
2	Controller backup power connectors (3)
3	x8 PCIe slot
4	x16 PCIe slot
5	x8 PCIe slot

Two-slot GPU riser

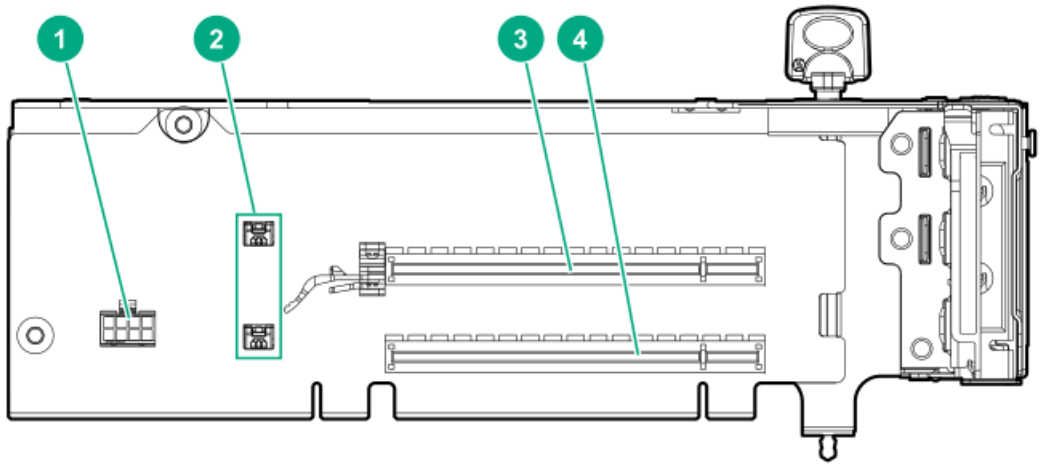

Item	Description
1	GPU power cable connector
2	Controller backup power connectors (2)
3	x16 PCIe slot
4	x16 PCIe slot

Two-slot x8 riser (tertiary)

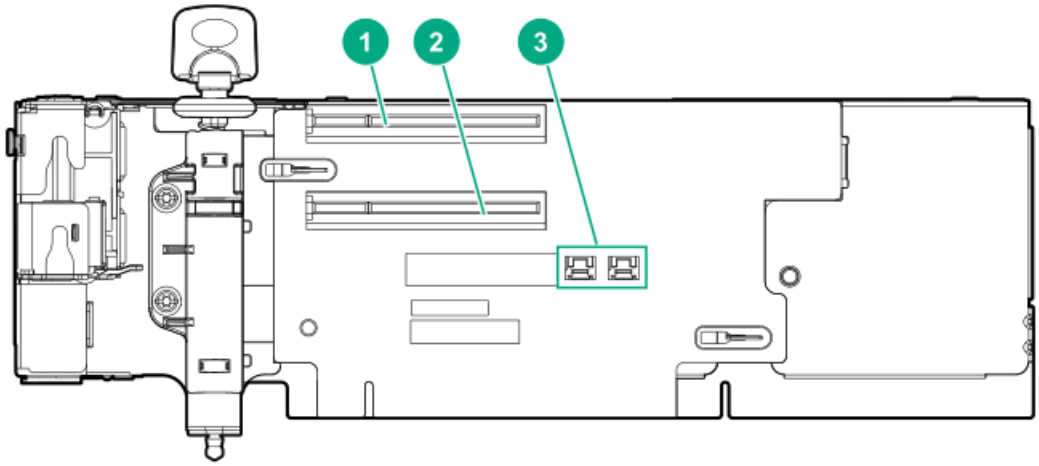

Item	Description
1	x8 PCIe slot
2	x8 PCIe slot
3	Controller backup power connectors (2)

x8 riser (tertiary)

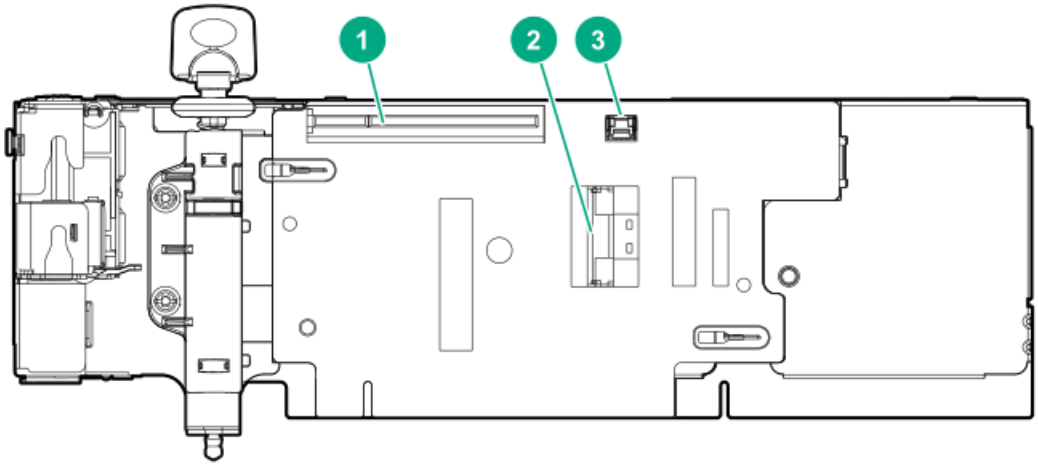

Item	Description
1	x8 PCIe slot
2	x8 Slimline NVMe connector
3	Controller backup power connector

Dual Slimline riser (tertiary)

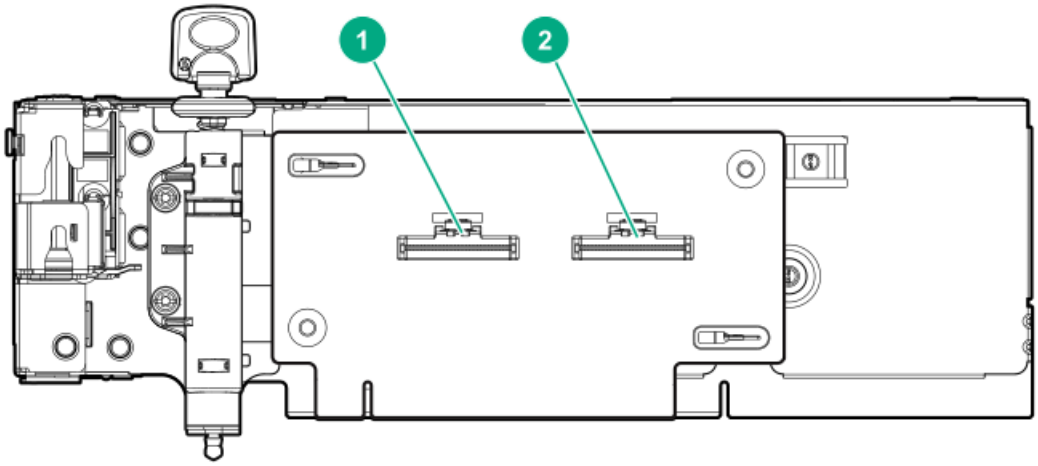

Item	Description
1	x8 Slimline NVMe connector
2	x8 Slimline NVMe connector

HPE Flex Slot Power Supply with Integrated Battery Backup Unit components and LED

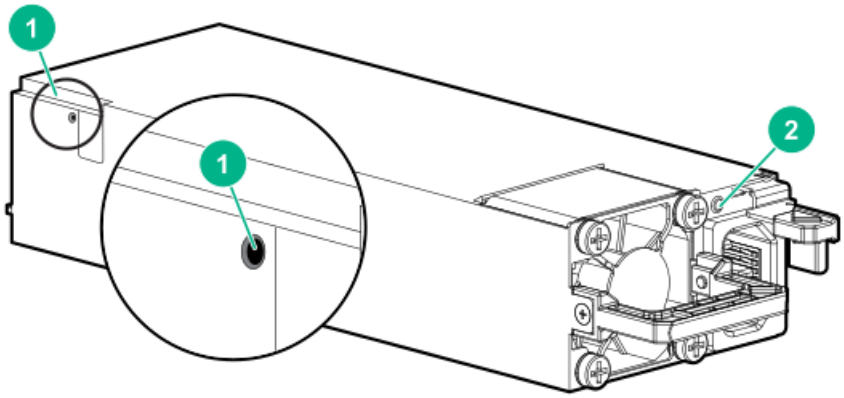

1. Battery check button
2. Power LED

For more information about the HPE Flex Slot Power Supply with Integrated Battery Backup Unit, see the document that ships with the component.

The label on the component indicates that the flex slot power supply has an integrated battery back up module.

Figure 1: HPE Flex Slot Power Supply with Integrated Battery Backup Unit label

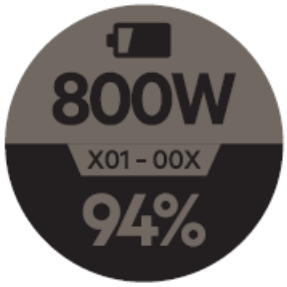

Checking the battery backup charge level

Procedure

1. Using a ball tip pen, press and release the battery check button.

   After releasing the button, you might have to wait up to seven seconds before the LED starts flashing.

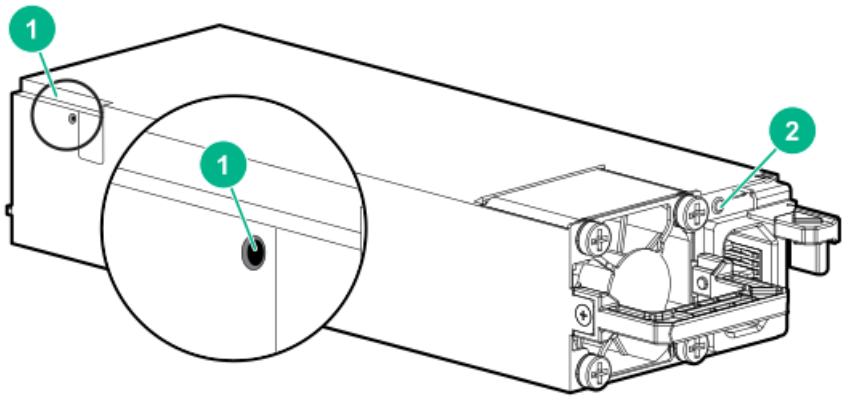

2. Note the number of LED flashes and reference the following table.

Flashes	Battery State RSOC [1]
0	Battery bad/failed
1	RSOC <= 29%
2	30% <= RSOC <= 62%
3	63% <= RSOC <= 94%
4	95% <= RSOC

[1] Relative State of Charge

The battery will fully charge within one hour of being installed into the server.

HPE 12G SAS Expander Card port numbering

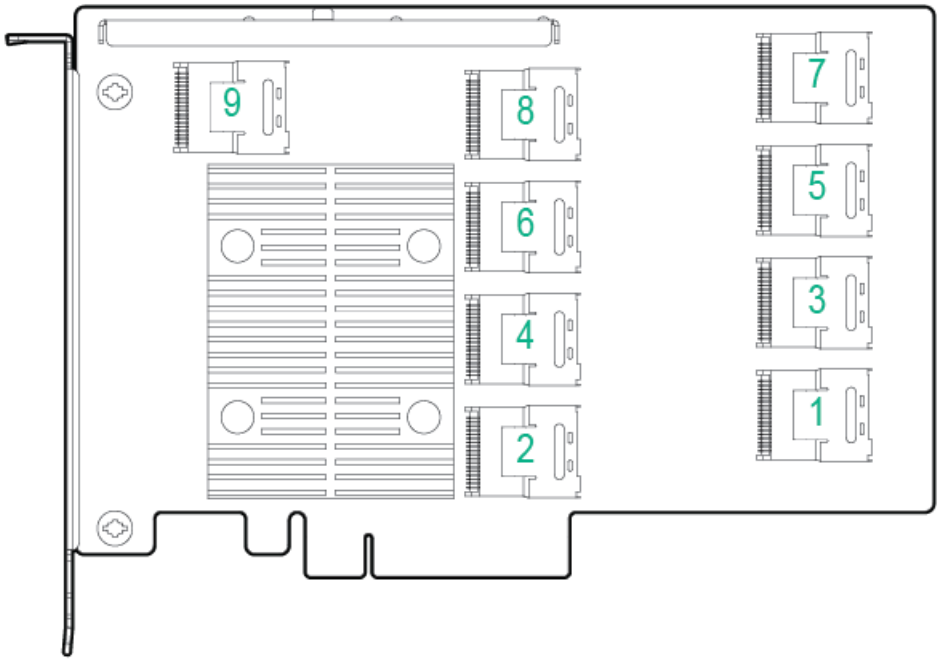

HPE Smart Array P824i-p MR Gen10 Controller

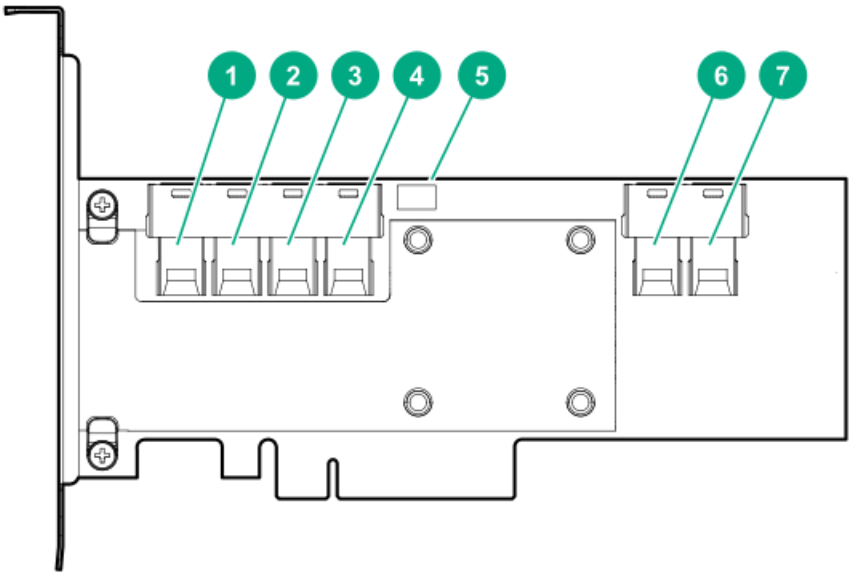

Components

Item	Description
1	Internal SAS port 1i
2	Internal SAS port 2i
3	Internal SAS port 3i
4	Internal SAS port 4i
5	Controller backup power cable connector
6	Internal SAS port 5i
7	Internal SAS port 6i

HPE NS204i-p NVMe OS Boot Device components

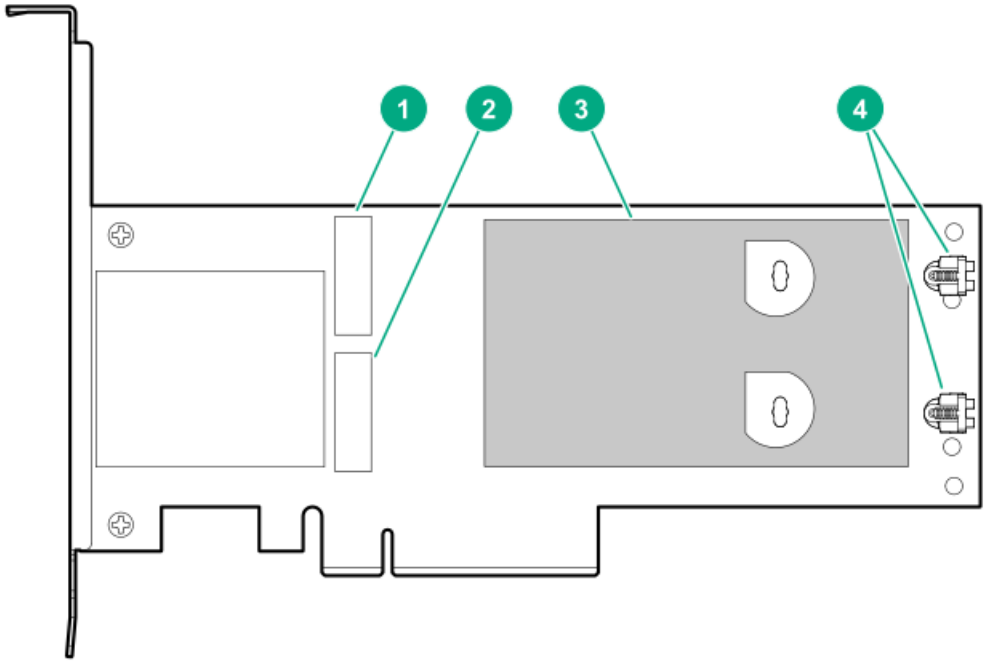

Item	Description
1	Drive bay 1
2	Drive bay 2
3	Thermal interface pad with removable liner
4	M.2 drive retaining latches

HPE NS204i-p NVMe OS Boot Device LED definitions

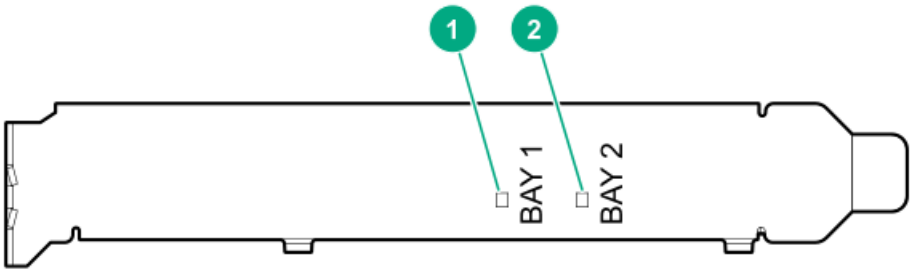

Item	Description	Fault LED status
1	Bay 1 LED	Off: Normal
2	Bay 2 LED	Flashing 1Hz: Drive predictive failure Amber: Drive failure

HPE InfiniBand HDR/Ethernet 940QSFP 56x16 adapter LEDs

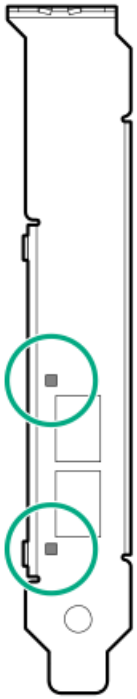

Link LED status [1]	Description
Off	A link has not been established.
Solid amber	Active physical link exists
Blinking amber	4 Hz blinking amber indicates a problem with the physical link.
Solid green	A valid logical (data activity) link exists with no active traffic.
Blinking green	A valid logical link exists with active traffic.

[1] 2-port adapter LEDs are shown. The 1-port adapters have only a single LED.

DSC-25 2-port SFP28 card ports and LEDs

Ports

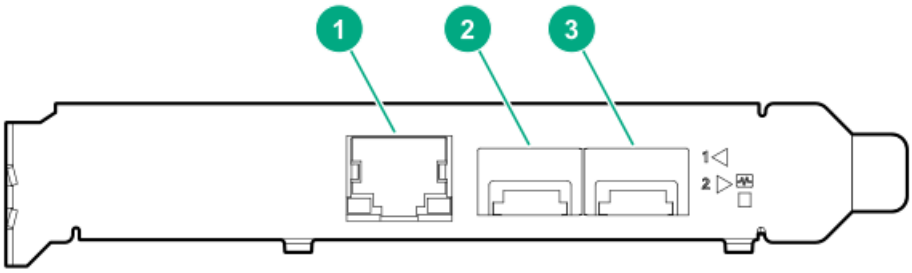

Table 1: Ports

Item	Port	Description
1	Management port	1GbE RJ45
2	Network interface port	10/25G SFP+ based
3	Network interface port	10/25G SFP+ based

LEDs

The HPE for Pensando DSP DSC-25 2p SFP28 card is a dual-port, single-slot, half-height, half-length (HHHL) SFP28 network adapter. It has LEDs for Link (L) and Activity (A) for each port. A half-height bracket is shown in the following illustration with SFP28 ports and LEDs.

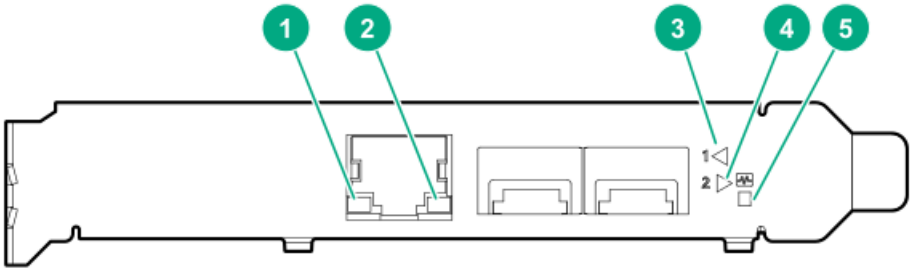

Table 2: LED indicators

Item	LED	Status	Description
1	Management Port Activity LED	Off	No activity
		Flashing	Passing traffic; flashing frequency indicates traffic intensity
2	Management Port Link LED	Off	A link has not been established
		Solid green	Valid Ethernet link
3	SFP Port 1 Link/Activity LED	Off	A link has not been established
		Solid green	Valid Ethernet link
		Flashing green	Passing traffic; flashing frequency indicates traffic intensity
		Solid amber	Link fault

Item	LED	Status	Description
4	SFP Port 2 Link/Activity LED	Off	A link has not been established
		Solid green	Valid Ethernet link
		Flashing green	Passing traffic; flashing frequency indicates traffic intensity
		Solid amber	Link fault
5	System status LED	Off	System is not powered
		Solid amber	Power is up, software has not booted yet
		Solid green	System is up and fully operational

Cabling

HPE ProLiant Gen10 DL Servers Storage Cabling Guidelines

When installing cables, observe the following:

- All ports are labeled:
  - System board ports
  - Controller ports
  - 12G SAS Expander ports
- Most data cables have labels near each connector with destination port information.
- Some data cables are pre-bent. Do not unbend or manipulate the cables.
- Before connecting a cable to a port, lay the cable in place to verify the length of the cable.
- When routing cables from the front to the rear of the server, use the cable channels on either side of the chassis.

Cabling diagrams

Use the following tables to find cabling information and diagrams.

Table 3: SAS/SATA kits

Option kit	Cable part number*	From	To	Power cable part number
Front 2SFF SAS/SATA drive cage (SFF)	869826-001 [1]	Drive backplane	System board SAS Expander Controller	869810-001 [6] 869825-001 [6]
Front 2SFF SAS/SATA 1U drive cage (LFF)	869826-001 [1]	Drive backplane	System board SAS Expander Controller	869810-001 [6]
Front 8SFF SAS/SATA drive cages	776402-001 [4]	Drive backplane	System board SAS Expander Controller	869825-001 [6]
Front 4LFF SAS/SATA drive cages	869827-001 [1]	Drive backplane	System board SAS Expander Controller	869825-001 [6]
Mid 4LFF SAS/SATA drive cage	869824-001 [2]	Drive backplane	System board SAS Expander Controller	869810-001 [6]
Rear 2SFF SAS/SATA riser drive cage	869823-001 [3]	Drive backplane	System board SAS Expander Controller	869806-001 [6]
Rear 3LFF SAS/SATA drive cage	869823-001 [3]	Drive backplane	System board SAS Expander Controller	869810-001 [6]
12G SAS Expander card	869802-001 [5] 869803-001 [5]	SAS Expander	Controller	-
SAS/SATA 3-position cable	869830-001 [3] 869816-001 [3]	Drive backplane	System board	-

* To order spare cables, use the following kits and spare part numbers.

[1] Mini SAS LFF Kit (875090-001)

[2] 12G SAS Expander Kit (875094-001)

[3] Mini SAS SFF Kit (875089-001)

[4] SAS 8SFF Kit (784629-001)

[5] 12G SAS Expander to controller kit (875093-001)

[6] Power cables kit (875096-001)

Table 4: NVMe bay/riser kits

Option kit	Cable part number	From	To	Power cable part number
Front 2SFF NVMe drive cage	NVMe cable included with NVMe riser	Drive backplane	Tertiary riser	869810-001 [3]
Front 8SFF SAS/SATA/NVMe Premium for SFF	776402-001 NVMe cable included with NVMe riser	Drive backplane	SATA to Systemboard, controller, or SAS expander Tertiary riser	869825-001 [3]
Front 8SFF NVMe drive cage	NVMe cable included with NVMe riser	Drive backplane	Primary riser	869825-001 [3]
4-Port Slim SAS Riser, Secondary PCIe	869814-001 [1] 869813-001 [1]	PCIe riser	Backplane	-
2-Port Slim SAS Riser, Tertiary PCIe	869812-001 [1] 869812-001 [1]	PCIe riser	Backplane	-
4-Port Slim SAS Riser	869811-001 776402-001	PCIe riser	Backplane	-
Gen10 1-Port Slim SAS Riser	869812-001 [1]	PCIe riser	Backplane	-

[1] NVMe Direct Attach Kit (875092-001)

[2] NVMe SFF Riser Kit (875091-001)

[3] Power cables kit (875096-001)

Table 5: GPU power

Option kit	Cable part number	From	To
HPE GPU 6px6p Y-Power Cable Kit	873193-001 [1]	GPU	Riser
HPE GPU 8px6p Y-Power Cable Kit	869805-001 [1]	GPU	Riser
HPE GPU 8p Keyed GPU Cable Kit	869820-001 [1]	GPU	Riser
HPE GPU 8p Cable Kit	869821-001 [1]	GPU	Riser
HPE GPU power adapter	869828-001 [1]	GPU	System board

[1] GPU cables kit (875097-001)

Table 6: Data kits

Option kit	Cable part number	From	To
Front USB/display port (SFF UMB)	869804-001 [1]	Component	System board
Front USB port (SFF UMB)	869829-001 [1]	Component	System board
Front display port (LFF)	869808-001 [1]	Component	System board
Optical disk drive	756914-001 [2]	Component	System board
Systems Insight Display	Included with component	Component	System board

[1] Data cables kit (875095-001)

[2] DVD cable kit (784623-001)

Cable routing: Front 2SFF drive option for SFF

Option 1: System board

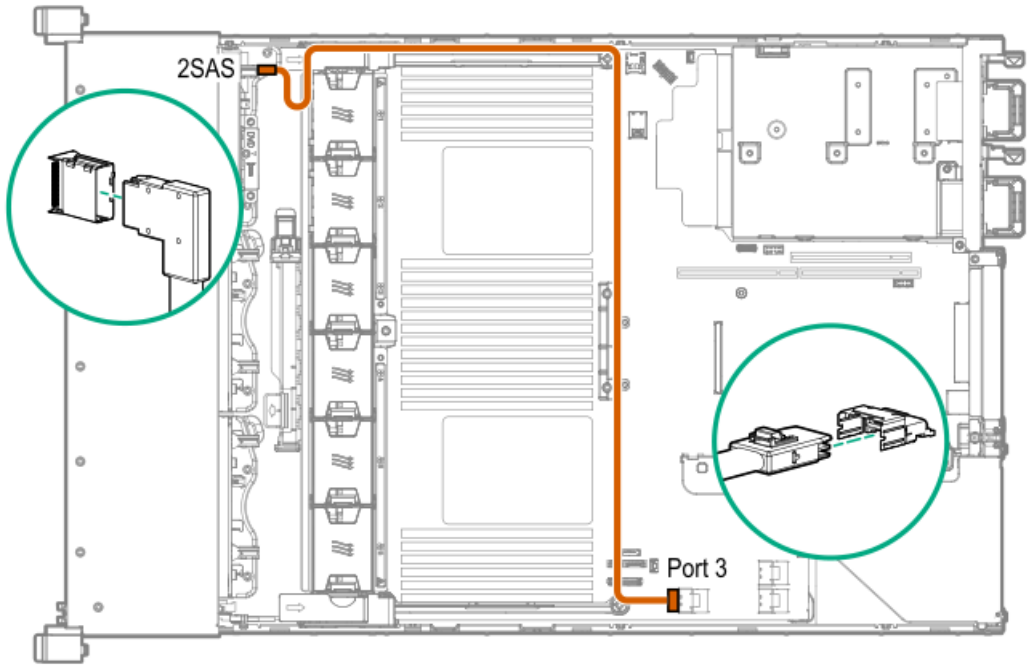

Option 2: SAS Expander

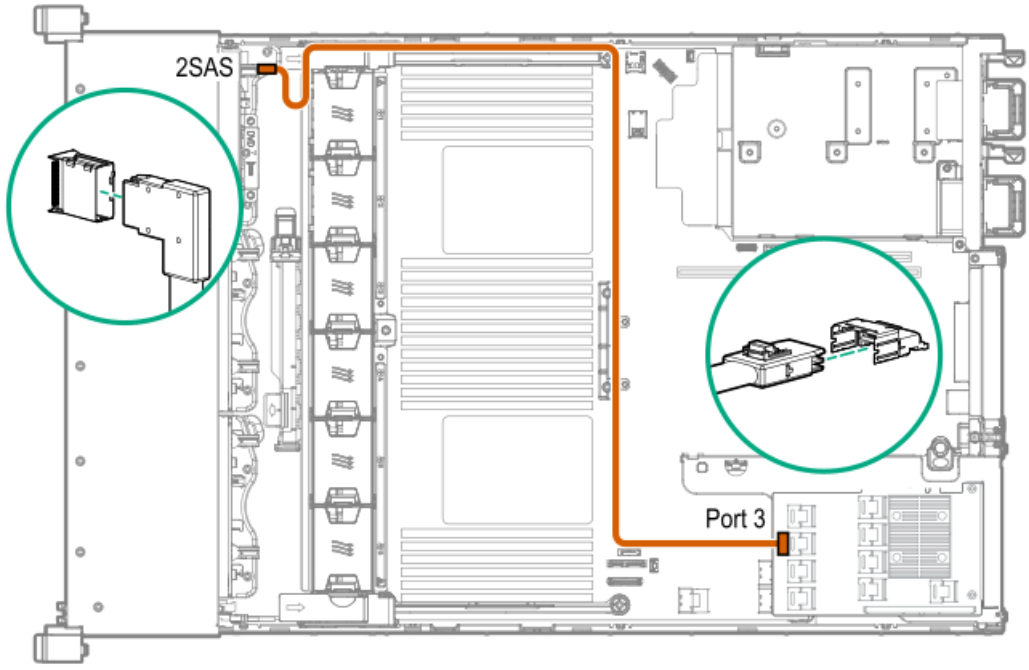

Option 3 (not shown): A controller

Cable routing: Front 2SFF drive option for LFF

Option 1: System board

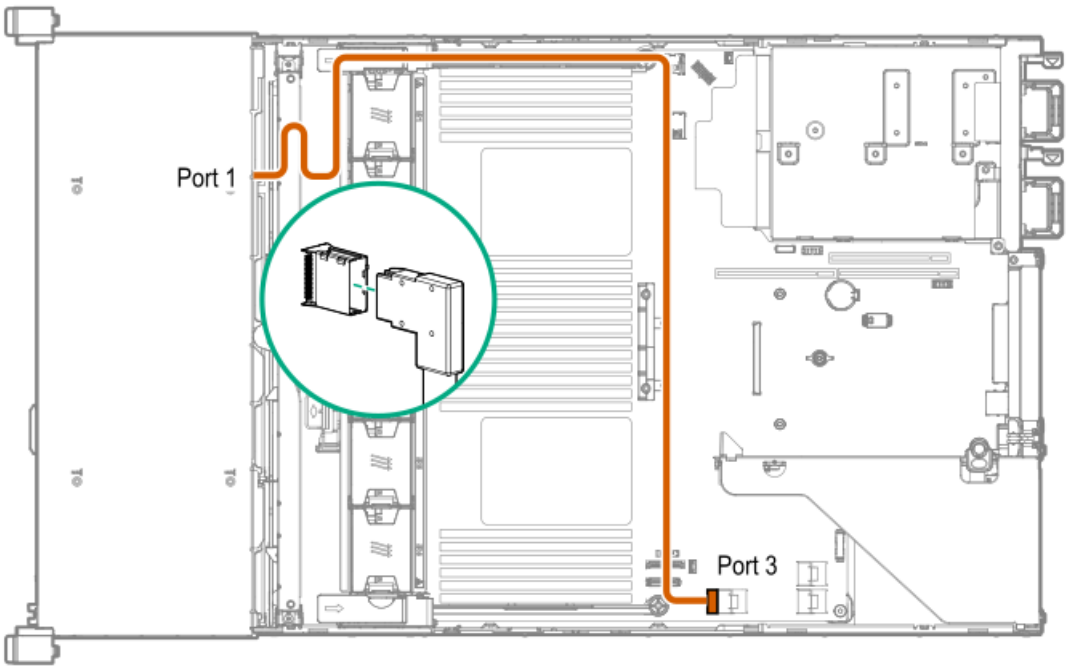

Option 2: Controller

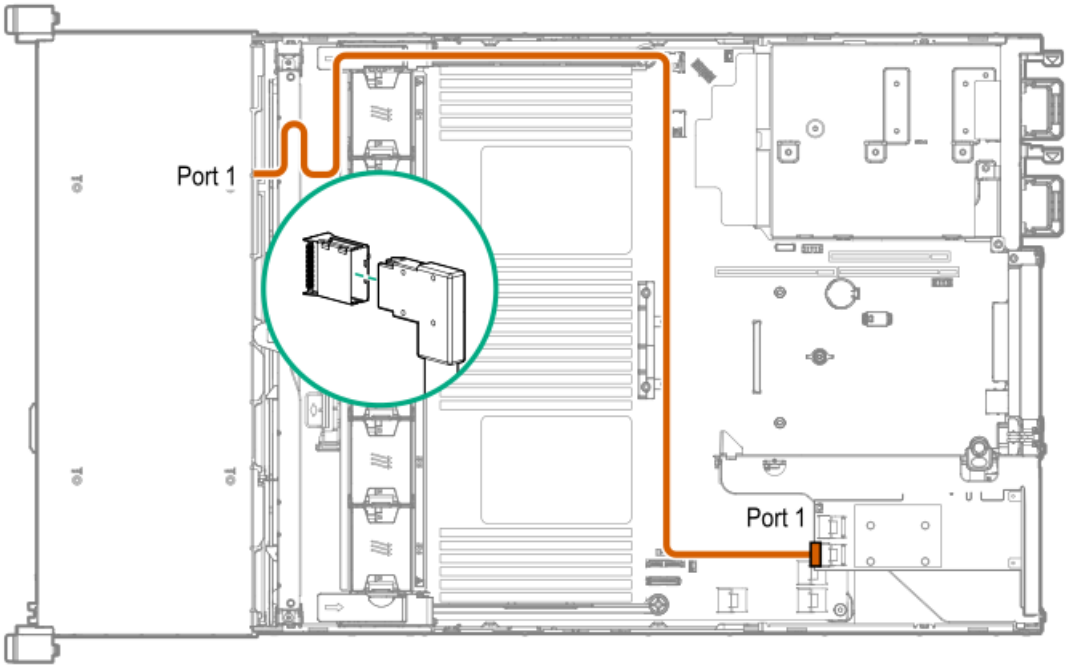

Option 3 (not shown): SAS Expander

Cable routing: Front 2SFF drive options (3 position cable)

SFF models

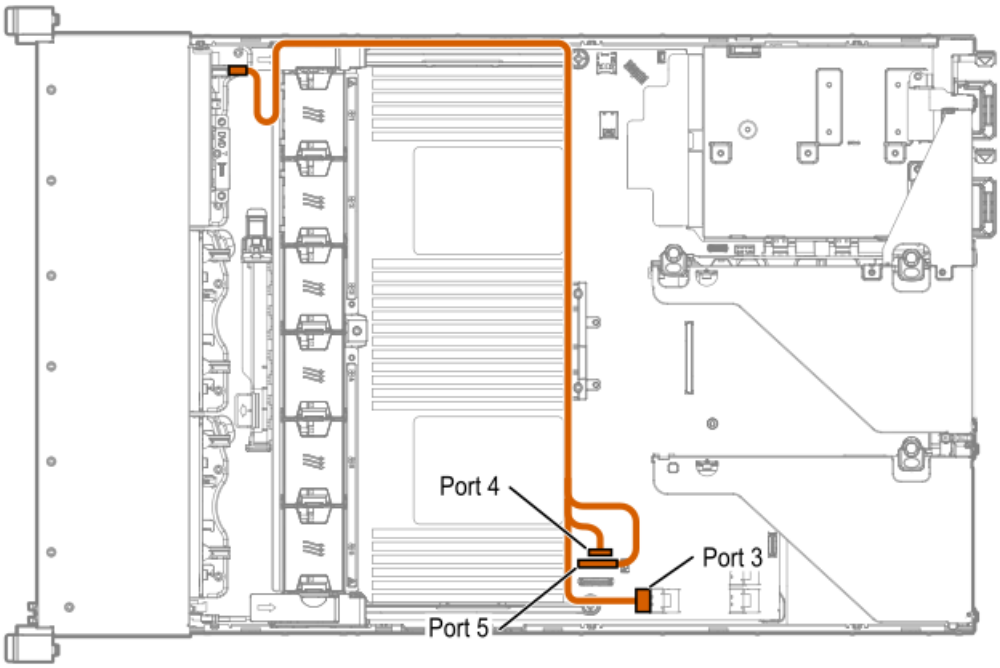

LFF models

Figure 2: Front 4LFF drive cage 1 (2SFF option)

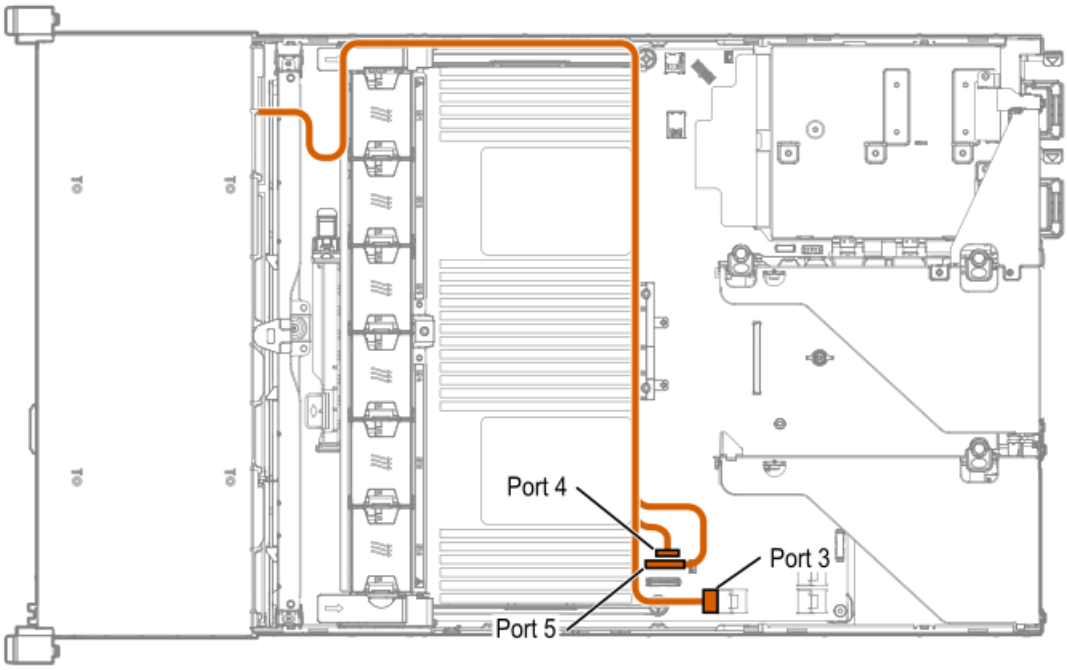

Figure 3: Front 4LFF drive cage 1

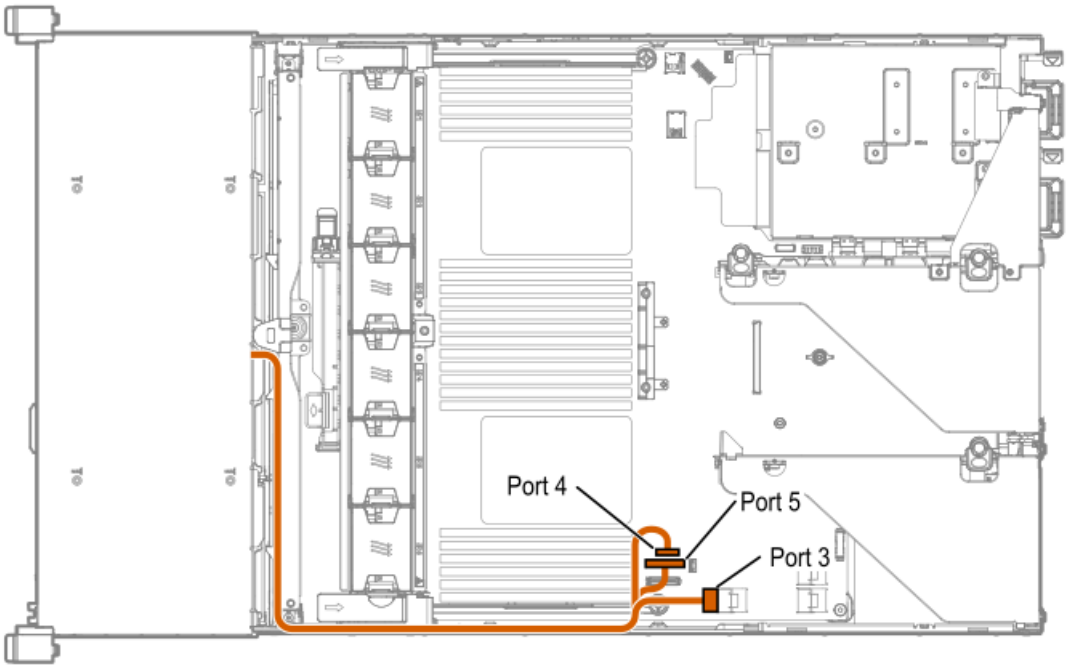

NOTE: The HPEProLiant DL380 Gen10 Mini-SAS 3-position cable kit (P/N 826709-B21) is required to support the 11th and 12th embedded SATA ports for 12LFF configurations.

Cable routing: Front 8SFF drive options

Box 1 to SAS Expander

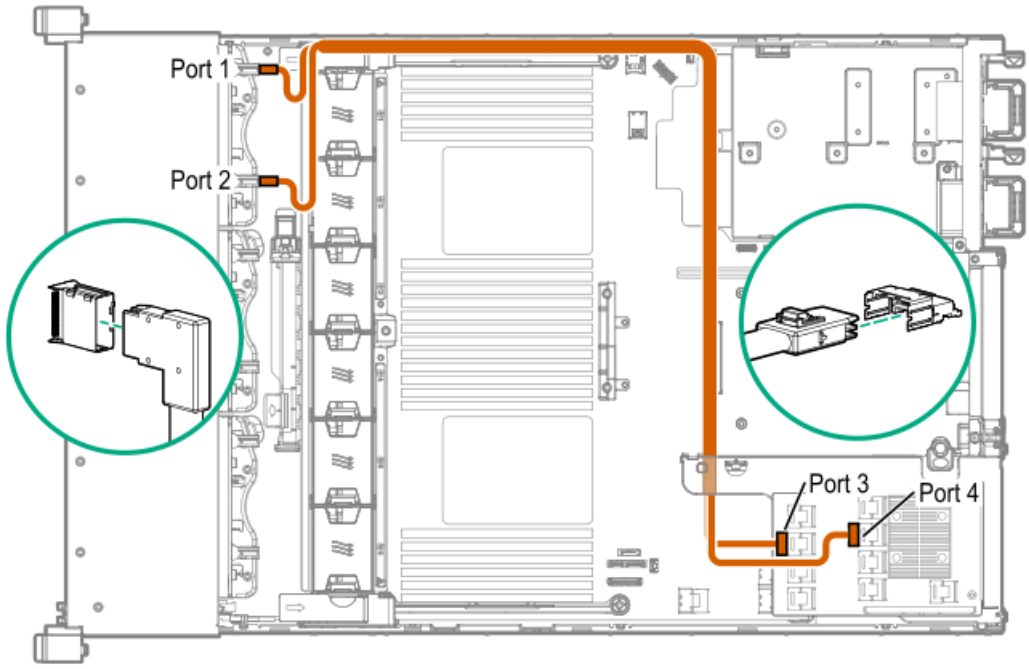

Box 2 to SAS Expander

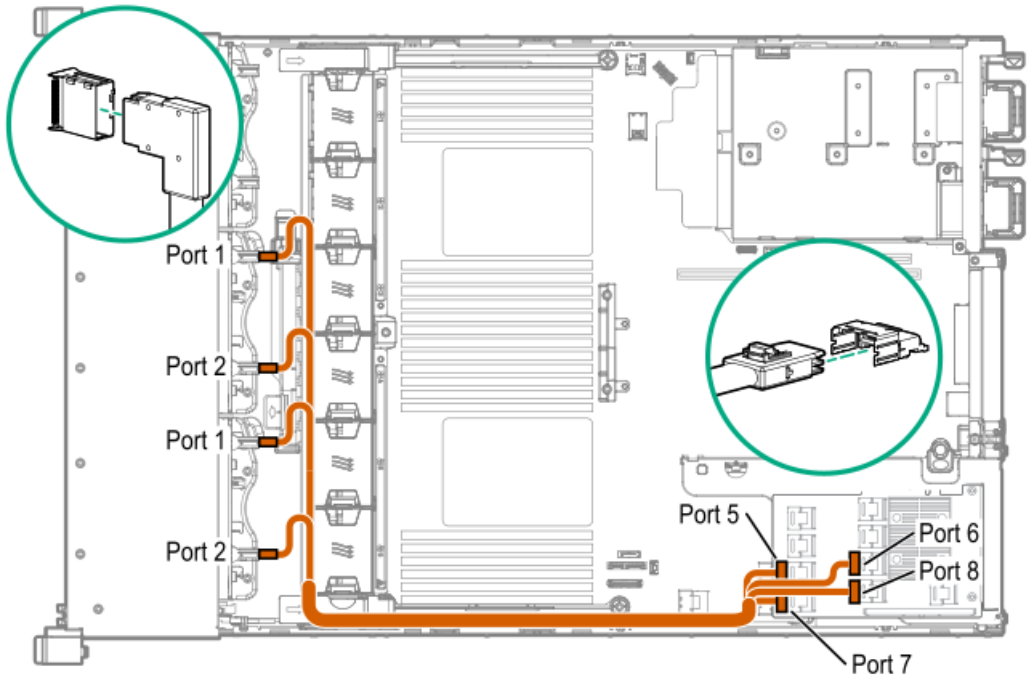

All boxes

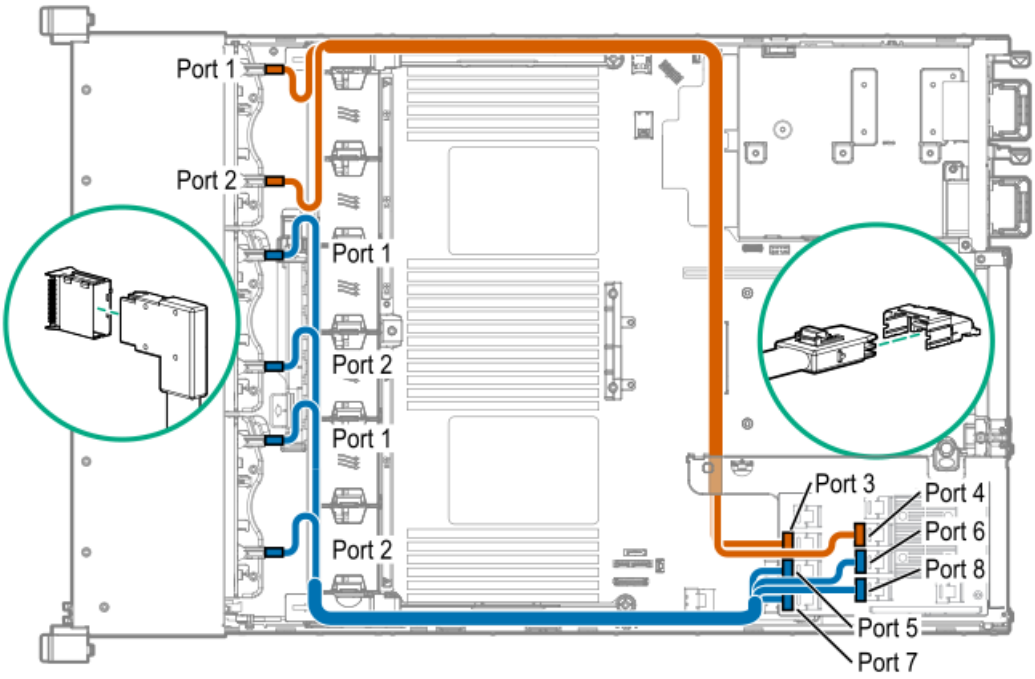
Port 1
Port 2
Port 1
Port 2
Port 1
Port 2
Port 3
Port 4
Port 6
Port 8
Port 5
Port 7

Cable routing: Front 8SFF NVMe/SAS premium drive option

The backplane shown is in box 3.

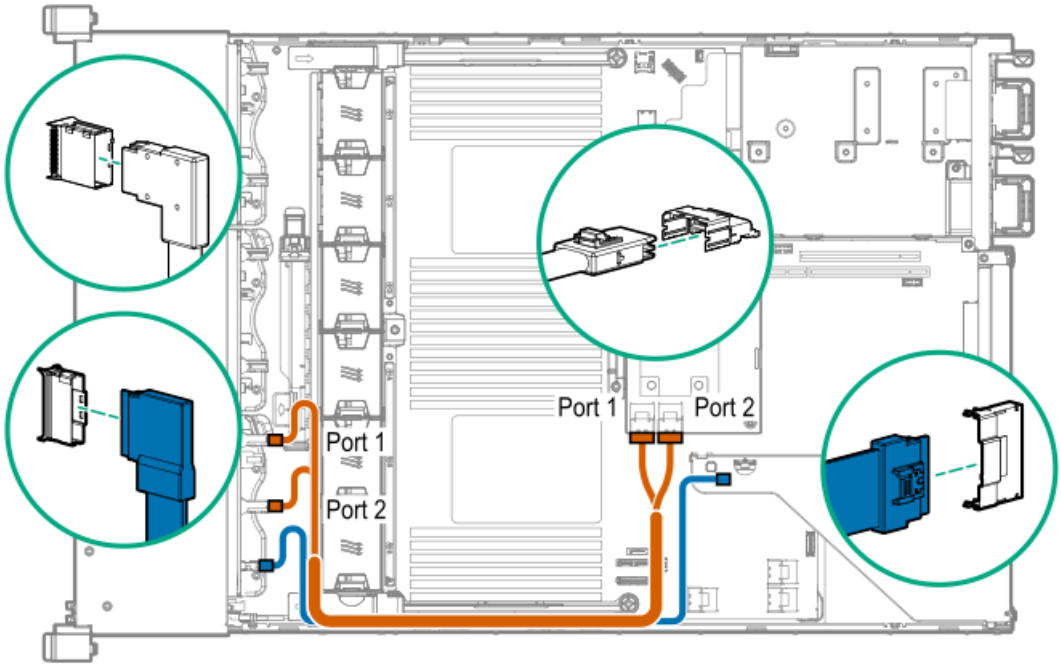

Cable routing: Front 8SFF NVMe drive options

Box 1

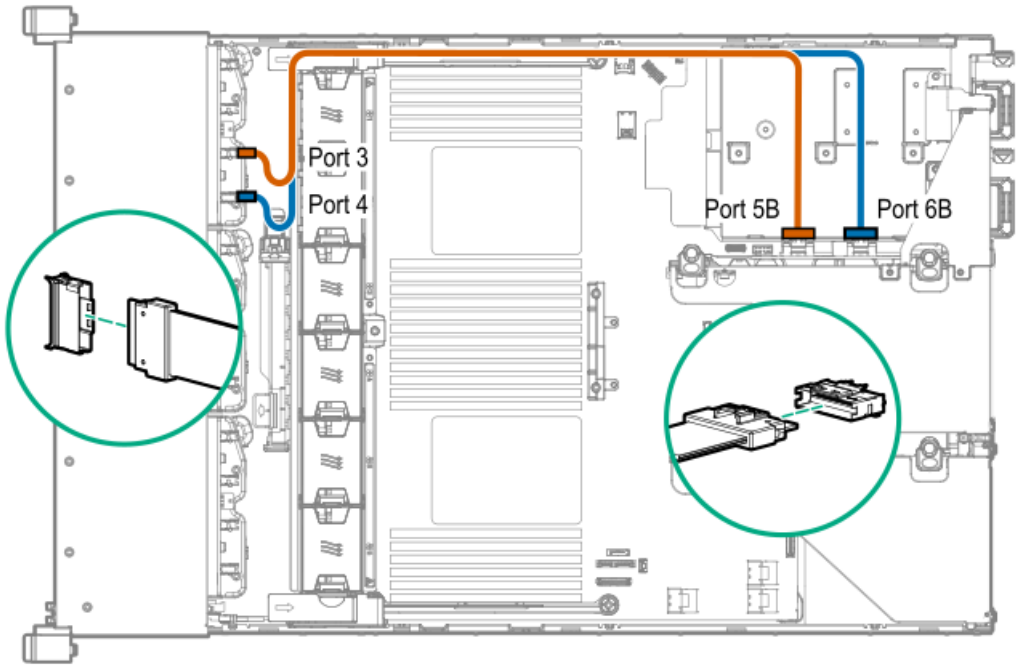

Box 2

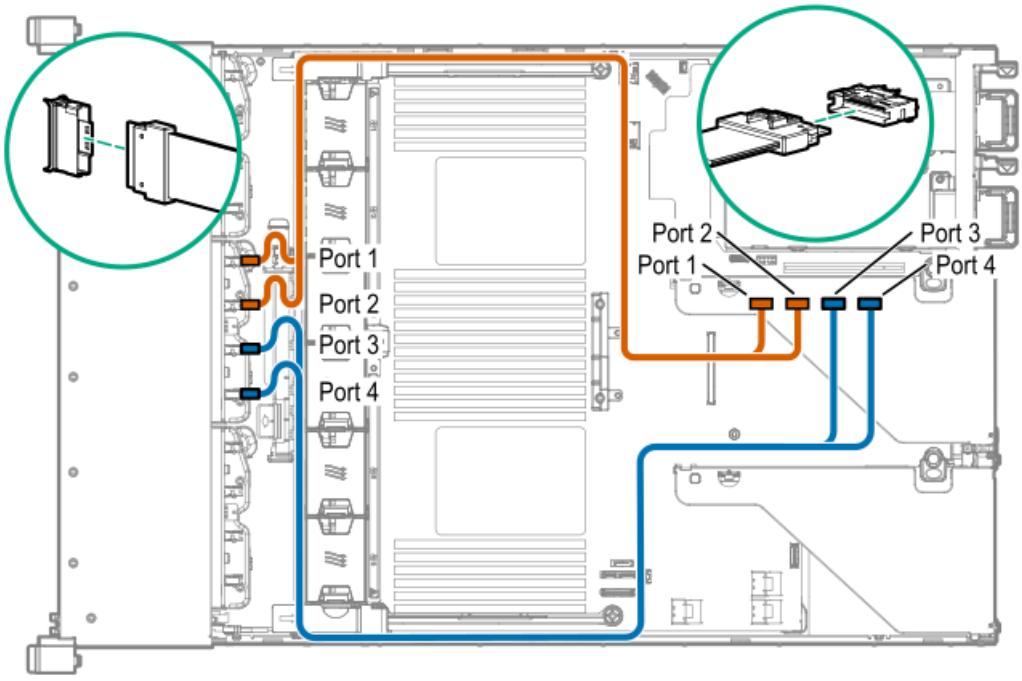

Box 3

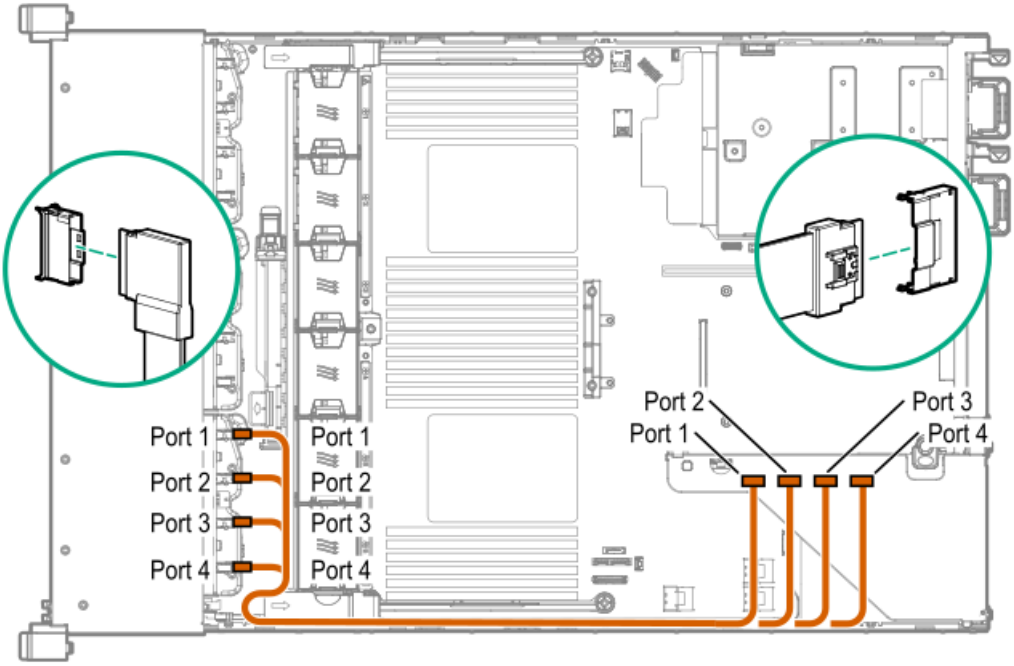
Port 1
Port 2
Port 3
Port 4
Port 1
Port 2
Port 3
Port 4
Port 2
Port 1
Port 3
Port 4

Cable routing: Front 2SFF NVMe drive option for SFF

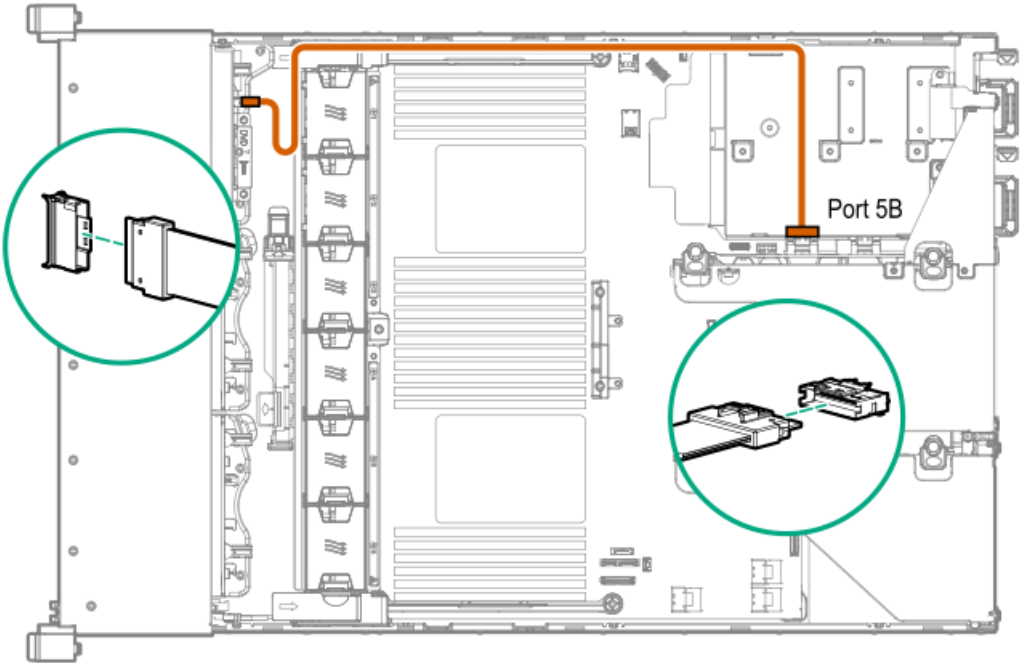

Cable routing: Front 2SFF NVMe drive option for LFF

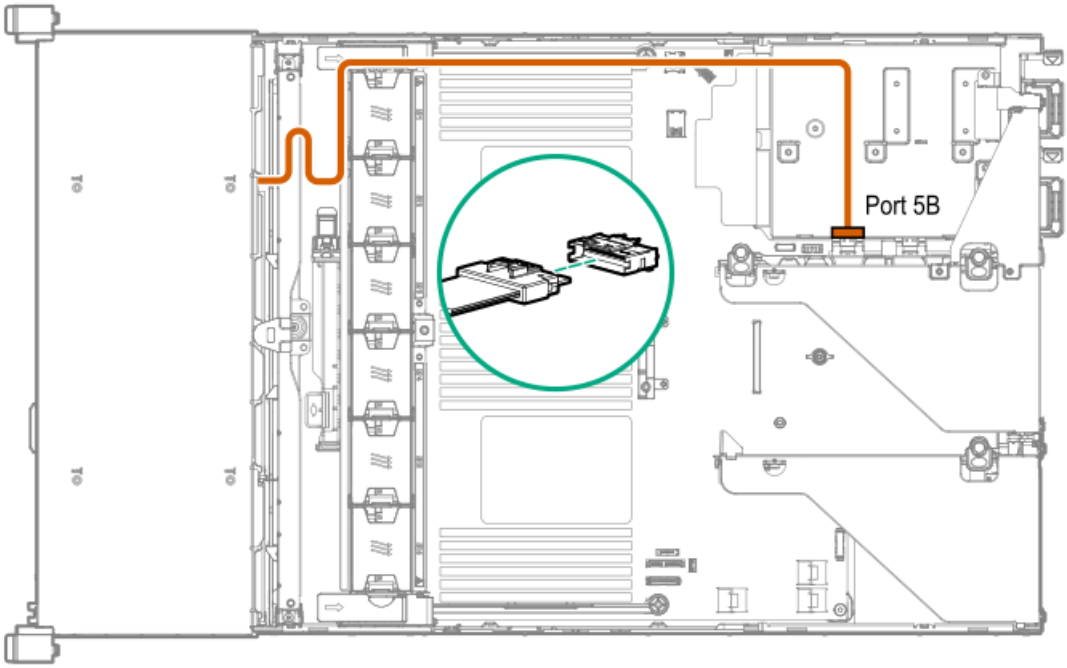

Cable routing: Midplane 4LFF drive option

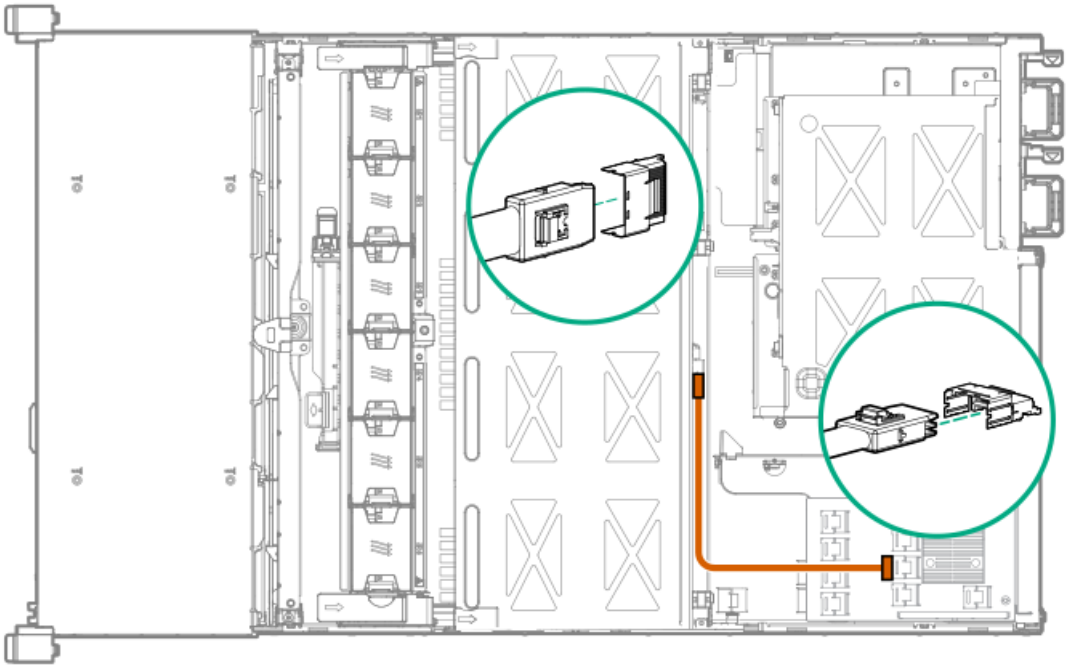

Cable routing: Rear 3LFF drive option

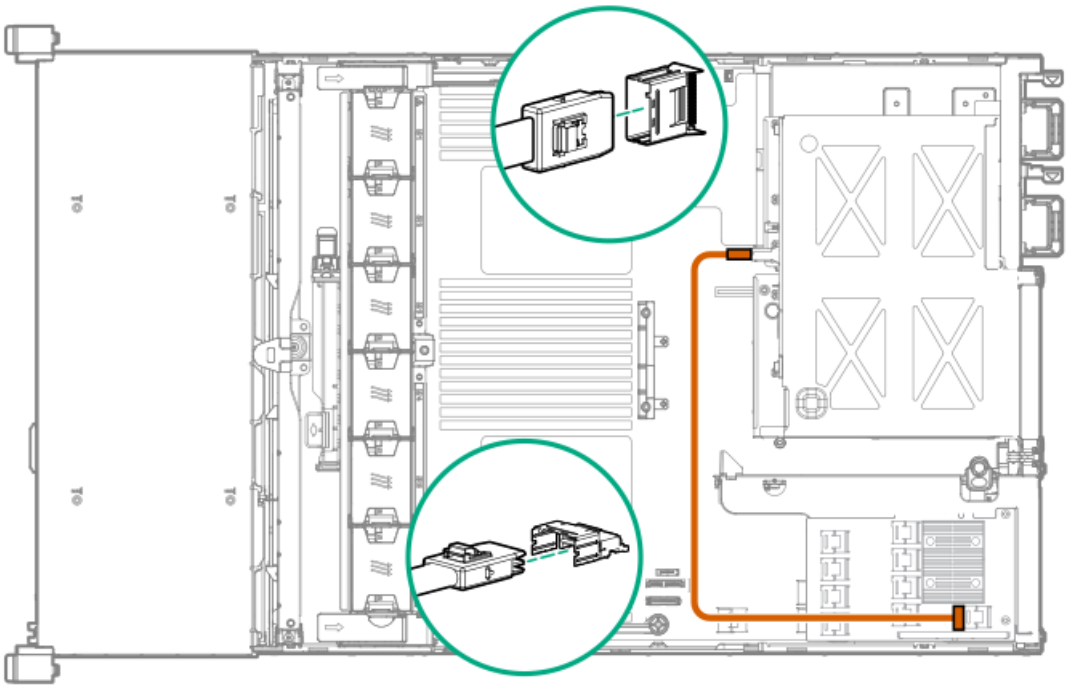

Cable routing: Rear 2SFF drive options

Rear 2SFF drive option to a SAS expander, both in the primary slot

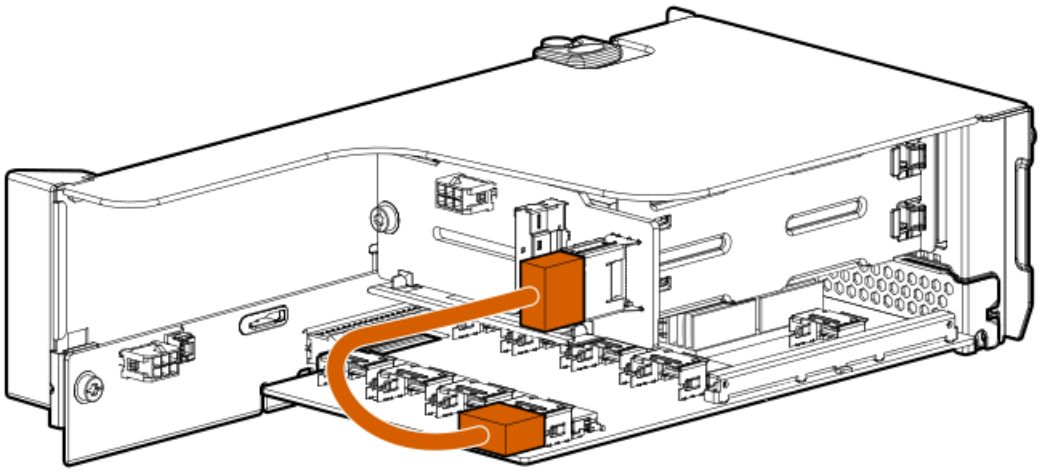

Rear 2SFF drive option in the secondary slot to a SAS Expander in primary slot

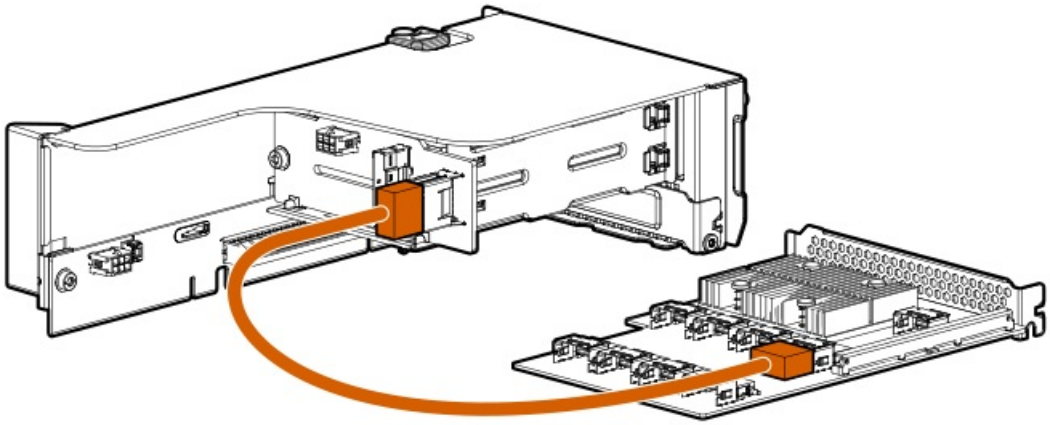

Rear 2SFF drive option above the power supplies to a controller

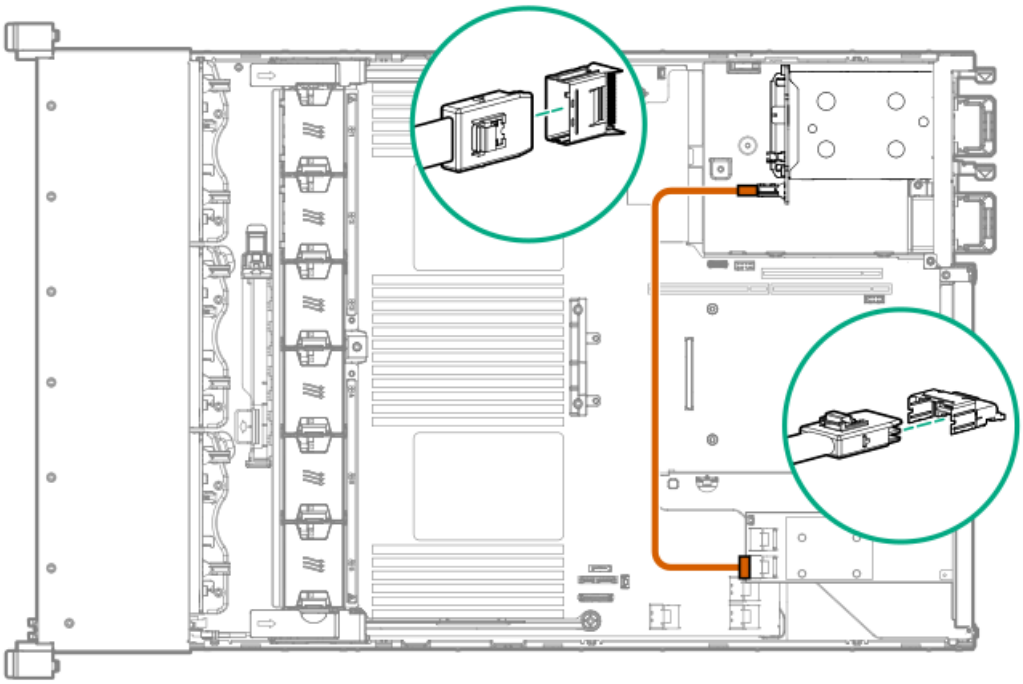

Cable routing: HPE 12G SAS Expander to a controller

Observe the following:

- Port 1 always connects to port 1 of the controller.
- Port 2 always connects to port 2 of the controller.

SAS expander to an a-type controller

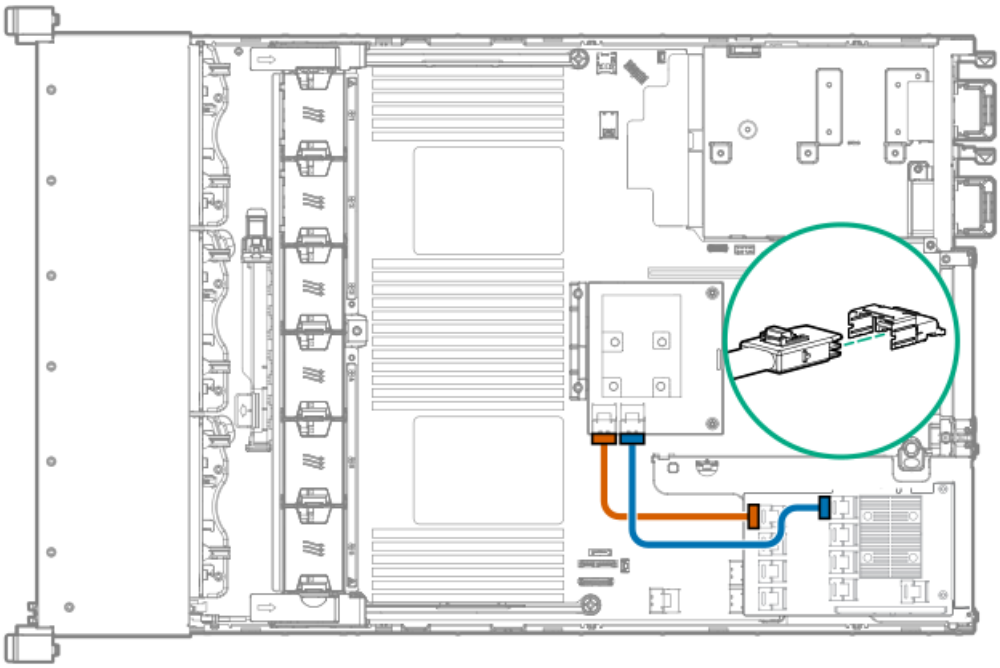

SAS expander to a p-type controller

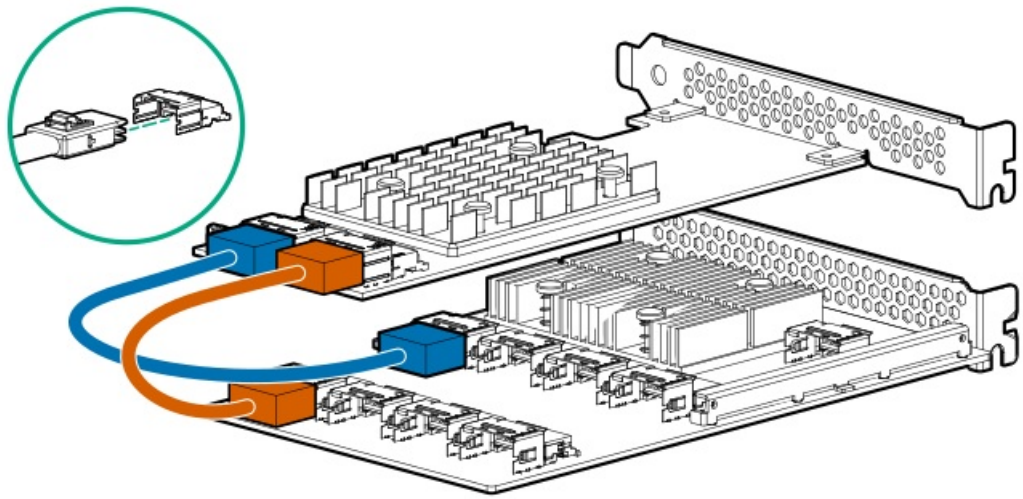

Cable routing: Systems Insight Display

An SFF model is shown. The routing is the same for LFF.

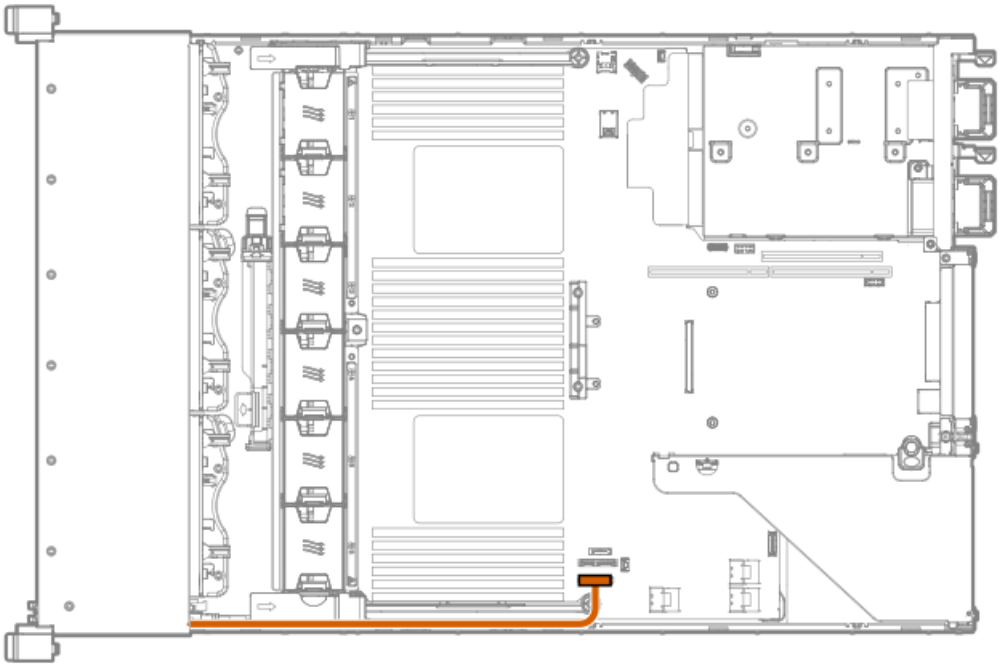

Pensando DSP DCS-25 2p SFP28 card cabling

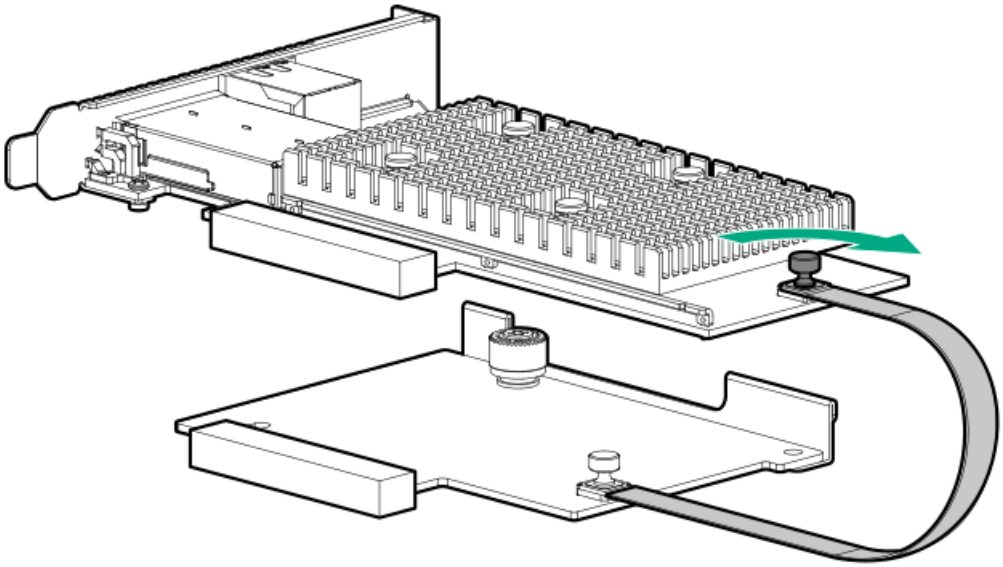

Specifications

Environmental specifications

Specification	Value
Temperature range [1]	—
Operating	10°C to 35°C (50°F to 95°F)
Nonoperating	-30°C to 60°C (-22°F to 140°F)
Relative humidity (noncondensing)	—
Operating	Minimum to be the higher (more moisture) of -12°C (10.4°F) dew point or 8% relative humidity Maximum to be 24°C (75.2°F) dew point or 90% relative humidity
Nonoperating	5% to 95% 38.7°C (101.7°F), maximum wet bulb temperature

[1] All temperature ratings shown are for sea level. An altitude derating of 1.0°C per 304.8 m (1.8°F per 1000 ft) to 3048 m (10,000 ft) is applicable. No direct sunlight allowed. Maximum rate of change is 20°C per hour (36°F per hour). The upper limit and rate of change might be limited by the type and number of options installed.

For certain approved hardware configurations, the supported system inlet temperature range is extended:

- 5°C to 10°C (41°F to 50°F) and 35°C to 40°C (95°F to 104°F) at sea level with an altitude derating of 1.0°C per every 175 m (1.8°F per every 574 ft) above 900 m (2953 ft) to a maximum of 3048 m (10,000 ft).
- 40°C to 45°C (104°F to 113°F) at sea level with an altitude derating of 1.0°C per every 125 m (1.8°F per every 410 ft) above 900 m (2953 ft) to a maximum of 3048 m (10,000 ft).

The approved hardware configurations for this system are listed on the **Hewlett Packard Enterprise website**.

Mechanical specifications

Specification	Value
Height	8.73 cm (3.44 in)
Depth, SFF	67.94 cm (26.75 in)
Depth, LFF	73.02 cm (28.75 in)
Width	44.54 cm (17.54 in)
Weight, SFF minimum	14.9 kg (32.75 lbs)
Weight, SFF maximum	19.5kg (43.00 lbs)
Weight, LFF minimum	17.1 kg (37.75 lbs)
Weight, LFF maximum	24.5 kg (54 lbs)

Power supply specifications

Depending on the installed options and the regional location where the server was purchased, the server can be configured with one of the following power supplies:

- HPE 500W Flex Slot Platinum Hot-plug Low Halogen Power Supply
- HPE 800W Flex Slot Platinum Hot-plug Low Halogen Power Supply
- HPE 800W Flex Slot Titanium Hot-plug Low Halogen Power Supply
- HPE 800W Flex Slot Universal Hot-plug Low Halogen Power Supply
- HPE 800W Flex Slot -48VDC Hot-plug Low Halogen Power Supply
- HPE 800W Flex Slot Scalable Persistent Memory Power Supply
- HPE 1600 W Flex Slot Platinum Hot-plug Low Halogen Power Supply

For detailed power supply specifications, see the QuickSpecs on the **Hewlett Packard Enterprise website**.

HPE 500W Flex Slot Platinum Hot-plug Low Halogen Power Supply

Specification	Value
Input requirements	—
Rated input voltage	100 VAC to 240 VAC 240 VDC for China only
Rated input frequency	50 Hz to 60 Hz Not applicable to 240 VDC
Rated input current	5.6 A at 100 VAC 2.7 A at 200 VAC 2.3 A at 240 VDC for China only
Maximum rated input power	557 W at 100 VAC 539 W at 200 VAC 537 W at 240 VDC for China only
BTUs per hour	1902 at 100 VAC 1840 at 200 VAC 1832 at 240 VDC for China only
Power supply output	—
Rated steady-state power	500 W at 100 VAC to 127 VAC input 500 W at 100 VAC to 240 VAC input 500 W at 240 VDC input for China only
Maximum peak power	500 W at 100 VAC to 127 VAC input 500 W at 100 VAC to 240 VAC input 500 W at 240 VDC input for China only

HPE 800W Flex Slot Platinum Hot-plug Low Halogen Power Supply

Specification	Value
Input requirements	—
Rated input voltage	100 VAC to 127 VAC 200 VAC to 240 VAC 240 VDC for China only
Rated input frequency	50 Hz to 60 Hz Not applicable to 240 VDC
Rated input current	9.1 A at 100 VAC 4.4 A at 200 VAC 3.6 A at 240 VDC for China only
Maximum rated input power	899 W at 100 VAC 867 W at 200 VAC 864 W at 240 VDC for China only
BTUs per hour	3067 at 100 VAC 2958 at 200 VAC 2949 at 240 VAC for China only
Power supply output	—
Rated steady-state power	800 W at 100 VAC to 127 VAC input 800 W at 100 VAC to 240 VAC input 800 W at 240 VDC input for China only
Maximum peak power	800 W at 100 VAC to 127 VAC input 800 W at 100 VAC to 240 VAC input 800 W at 240 VDC input for China only

HPE 800W Flex Slot Titanium Hot-plug Low Halogen Power Supply

Specification	Value
Input requirements	—
Rated input voltage	200 VAC to 240 VAC 240 VDC for China only
Rated input frequency	50 Hz to 60 Hz Not applicable to 240 VDC
Rated input current	4.35 A at 200 VAC 3.62 A at 240 VAC 3.62 A at 240 VDC for China only
Maximum rated input power	851 W at 200 VAC 848 W at 240 VAC 848 W at 240 VDC for China only
BTUs per hour	2905 at 200 VAC 2893 at 240 VAC 2893 at 240 VDC for China only
Power supply output	—
Rated steady-state power	800 W at 200 VAC to 240 VAC input 800 W at 240 VDC input for China only
Maximum peak power	800 W at 200 VAC to 240 VAC input 800 W at 240 VDC input for China only

HPE 800W Flex Slot Universal Hot-plug Low Halogen Power Supply

Specification	Value
Input requirements	—
Rated input voltage	200 VAC to 277 VAC 380 VDC
Rated input frequency	50 Hz to 60 Hz
Rated input current	4.4 A at 200 VAC 3.1 A at 277 VAC 2.3 A at 380 VDC
Maximum rated input power	869 W at 200 VAC 865 W at 230 VAC 861 W at 277 VAC 863 W at 380 VDC
BTUs per hour	2964 at 200 VAC 2951 at 230 VAC 2936 at 277 VAC 2943 at 380 VDC
Power supply output	—
Rated steady-state power	800 W at 200 VAC to 277 VAC input
Maximum peak power	800 W at 200 VAC to 277 VAC input

HPE 800W Flex Slot -48VDC Hot-plug Low Halogen Power Supply

Specification	Value
Input requirements	—
Rated input voltage	-40 VDC to -72 VDC -48 VDC nominal input
Rated input current	22.1 A at -40 VDC input 18.2 A at -48 VDC input, nominal input 12.0 A at -72 VDC input
Rated input power (W)	874 W at -40 VDC input 865 W at -48 VDC input, nominal input 854 W at -72 VDC input
Rated input power (BTUs per hour)	2983 at -40 VDC input 2951 at -48 VDC input, nominal input 2912 at -72 VDC input
Power supply output	—
Rated steady-state power (W)	800 W at -40 VDC to -72 VDC
Maximum peak power (W)	800 W at -40 VDC to -72 VDC
Maximum peak power	800 W at -40 VDC to -72 VDC input

⚠ **WARNING:** To reduce the risk of electric shock or energy hazards:

- This equipment must be installed by trained service personnel.
- Connect the equipment to a reliably grounded secondary circuit source. A secondary circuit has no direct connection to a primary circuit and derives its power from a transformer, converter, or equivalent isolation device.
- The branch circuit overcurrent protection must be rated 27 A.

⚠ **CAUTION:** This equipment is designed to permit the connection of the earthed conductor of the DC supply circuit to the earthing conductor at the equipment.

If this connection is made, all of the following must be met:

- This equipment must be connected directly to the DC supply system earthing electrode conductor or to a bonding jumper from an earthing terminal bar or bus to which the DC supply system earthing electrode conductor is connected.
- This equipment must be located in the same immediate area (such as adjacent cabinets) as any other equipment that has a connection between the earthed conductor of the same DC supply circuit and the earthing conductor, and also the point of earthing of the DC system. The DC system must be earthed elsewhere.
- The DC supply source is to be located within the same premises as the equipment.
- Switching or disconnecting devices must not be in the earthed circuit conductor between the DC source and the point of connection of the earthing electrode conductor.

HPE 800W Flex Slot Scalable Persistent Memory Power Supply

Specification	Value
Input requirements	
Rated input voltage	100 VAC to 127 VAC 200 VAC to 240 VAC 240 VDC for China only
Rated input frequency	50 Hz to 60 Hz Not applicable to 240 VDC
Rated input current	5.8 A at 100 VAC 4.5 A at 200 VAC 3.8 A at 240 VDC for China only
Maximum rated input power	580 W at 100 VAC 900 W at 200 VAC 912 W at 240 VDC for China only
BTUs per hour	1,979 at 100 VAC 3,071 at 240 VAC 3,112 at 240 VDC for China only
Power supply output	
Rated steady-state power	500 W at 100 VAC to 127 VAC input 800 W at 200 VAC to 240 VAC input 800 W at 240 VDC input for China only
Maximum peak power	500 W at 90 VAC to 132 VAC input 800 W at 180 VAC to 264 VAC input 800 W at 240 VDC input for China only

HPE 1600 W Flex Slot Platinum Hot-plug Low Halogen Power Supply

Specification	Value
Input requirements	—
Rated input voltage	200 VAC to 240 VAC 240 VDC for China only
Rated input frequency	50 Hz to 60 Hz
Rated input current	8.7 A at 200 VAC 7.2 A at 240 VAC
Maximum rated input power	1734 W at 200 VAC 1725 W at 240 VAC
BTUs per hour	5918 at 200 VAC 5884 at 240 VAC
Power supply output	—
Rated steady-state power	1600 W at 200 VAC to 240 VAC input 1600 W at 240 VDC input
Maximum peak power	2200 W for 1 ms (turbo mode) at 200 VAC to 240 VAC input

Support and other resources

Accessing Hewlett Packard Enterprise Support

- For live assistance, go to the Contact Hewlett Packard Enterprise Worldwide website:

  https://www.hpe.com/info/assistance

- To access documentation and support services, go to the Hewlett Packard Enterprise Support Center website:

  https://www.hpe.com/support/hpesc

Information to collect

- Technical support registration number (if applicable)
- Product name, model or version, and serial number
- Operating system name and version
- Firmware version
- Error messages
- Product-specific reports and logs
- Add-on products or components
- Third-party products or components

Accessing updates

- Some software products provide a mechanism for accessing software updates through the product interface. Review your product documentation to identify the recommended software update method.
- To download product updates:

  Hewlett Packard Enterprise Support Center

  https://www.hpe.com/support/hpesc

  Hewlett Packard Enterprise Support Center: Software downloads

  https://www.hpe.com/support/downloads

  My HPE Software Center

  https://www.hpe.com/software/hpesoftwarecenter
- To subscribe to eNewsletters and alerts:

  https://www.hpe.com/support/e-updates
- To view and update your entitlements, and to link your contracts and warranties with your profile, go to the Hewlett Packard Enterprise Support Center More Information on Access to Support Materials page:

  https://www.hpe.com/support/AccessToSupportMaterials

IMPORTANT:

Access to some updates might require product entitlement when accessed through the Hewlett Packard Enterprise Support Center. You must have an HPE Passport set up with relevant entitlements.

Remote support

Remote support is available with supported devices as part of your warranty or contractual support agreement. It provides intelligent event diagnosis, and automatic, secure submission of hardware event notifications to Hewlett Packard Enterprise, which will initiate a fast and accurate resolution based on your product's service level. Hewlett Packard Enterprise strongly recommends that you register your device for remote support.

If your product includes additional remote support details, use search to locate that information.

Remote support and Proactive Care information

HPE Get Connected

https://www.hpe.com/services/getconnected

HPE Proactive Care services

https://www.hpe.com/services/proactivecare

HPE Datacenter Care services

https://www.hpe.com/services/datacentercare

HPE Proactive Care service: Supported products list

https://www.hpe.com/services/proactivecaresupportedproducts

HPE Proactive Care advanced service: Supported products list

https://www.hpe.com/services/proactivecareadvancedsupportedproducts

Proactive Care customer information

Proactive Care central

https://www.hpe.com/services/proactivecarecentral

Proactive Care service activation

https://www.hpe.com/services/proactivecarecentralgetstarted

Warranty information

To view the warranty information for your product, see the links provided below:

HPE ProLiant and IA-32 Servers and Options

https://www.hpe.com/support/ProLiantServers-Warranties

HPE Enterprise and Cloudline Servers

https://www.hpe.com/support/EnterpriseServers-Warranties

HPE Storage Products

https://www.hpe.com/support/Storage-Warranties

HPE Networking Products

https://www.hpe.com/support/Networking-Warranties

Regulatory information

To view the regulatory information for your product, view the Safety and Compliance Information for Server, Storage, Power, Networking, and Rack Products, available at the Hewlett Packard Enterprise Support Center:

https://www.hpe.com/support/Safety-Compliance-EnterpriseProducts

Additional regulatory information

Hewlett Packard Enterprise is committed to providing our customers with information about the chemical substances in our products as needed to comply with legal requirements such as REACH (Regulation EC No 1907/2006 of the European Parliament and the Council). A chemical information report for this product can be found at:

https://www.hpe.com/info/reach

For Hewlett Packard Enterprise product environmental and safety information and compliance data, including RoHS and REACH, see:

https://www.hpe.com/info/ecodata

For Hewlett Packard Enterprise environmental information, including company programs, product recycling, and energy efficiency, see:

https://www.hpe.com/info/environment

Documentation feedback

Hewlett Packard Enterprise is committed to providing documentation that meets your needs. To help us improve the documentation, send any errors, suggestions, or comments to Documentation Feedback (**docsfeedback@hpe.com**). When submitting your feedback, include the document title, part number, edition, and publication date located on the front cover of the document. For online help content, include the product name, product version, help edition, and publication date located on the legal notices page.

Acronyms and abbreviations

AMP
Advanced Memory Protection

API
application program interface

ASHRAE
American Society of Heating, Refrigerating and Air-Conditioning Engineers

CSR
certificate signing request

FLR
FlexibleLOM for rack servers

FSBBU
Flex slot battery backup

GPU
graphics processing unit

HBA
host bus adapter

HPE SIM
HPE Systems Insight Manager

HPE SIM
HPE Systems Insight Manager

IEC
International Electrotechnical Commission

iLO
Integrated Lights-Out

IML
Integrated Management Log

LFF
large form factor

NMI
nonmaskable interrupt

NVDIMM
non-volatile dual in-line memory module

NVDIMM-N
non-volatile dual in-line memory module with byte-addressable interface to DRAM

NVMe
non-volatile memory express

NVRAM
nonvolatile memory

PCIe
Peripheral Component Interconnect Express

POST
Power-On Self-Test

RBSU
ROM-Based Setup Utility

REST
representational state transfer

RSOC

relative state of change

SAS
serial attached SCSI

SATA
serial ATA

SD
Secure Digital

SFF
small form factor

SPP
Service Pack for ProLiant

SSD
solid-state drive

SUV
serial, USB, video

TPM
Trusted Platform Module

UEFI
Unified Extensible Firmware Interface

UID
unit identification

USB
universal serial bus

VDC
voltage direct-current