Maintenance and Service Guide
HP Engage One Pro 23.8 G2 AiO System

SUMMARY

This guide provides maintenance information about such topics as spare parts, removal and replacement of parts, security, and backing up.

Legal information

© Copyright 2025 HP Development Company, L.P.

AMD is a trademark of Advanced Micro Devices, Inc. Bluetooth is a trademark owned by its proprietor and used by HP Inc. under license. Intel, Celeron, Core, and vPro are trademarks of Intel Corporation or its subsidiaries in the U.S. and/or other countries. Microsoft and Windows are either registered trademarks or trademarks of Microsoft Corporation in the United States and/or other countries. USB Type-C and USB-C are registered trademarks of USB Implementers Forum. VESA is a trademark owned by the Video Electronics Standards Association (VESA) in the United States and other countries. Wi-Fi is a registered trademark of Wi-Fi Alliance.

The information contained herein is subject to change without notice. The only warranties for HP products and services are set forth in the express warranty statements accompanying such products and services. Nothing herein should be construed as constituting an additional warranty. HP shall not be liable for technical or editorial errors or omissions contained herein.

First Edition: February 2025

Document Part Number: P28119-001

Product notice

This guide describes features that are common to most models. Some features may not be available on your computer.

Not all features are available in all editions or versions of Windows. Systems may require upgraded and/or separately purchased hardware, drivers, software or BIOS update to take full advantage of Windows functionality. Windows is automatically updated, which is always enabled. High-speed internet and Microsoft account required. ISP fees may apply and additional requirements may apply over time for updates. See http://www.windows.com. **If your product ships with Windows in S Mode:** Windows in S Mode works exclusively with apps from the Microsoft Store within Windows. Certain default settings, features, and apps cannot be changed. Some accessories and apps that are compatible with Windows may not work (including some antivirus, PDF writers, driver utilities, and accessibility apps), and performance may vary, even if you switch out of S Mode. If you switch to Windows, you cannot switch back to S Mode. Learn more at Windows.com/SmodeFAQ.

To access the latest user guides, go to http://www.hp.com/support, and follow the instructions to find your product. Then select **Manuals**.

Software terms

By installing, copying, downloading, or otherwise using any software product preinstalled on this computer, you agree to be bound by the terms of the HP End User License Agreement (EULA). If you do not accept these license terms, your sole remedy is to return the entire unused product (hardware and software) within 14 days for a full refund subject to the refund policy of your seller.

For any further information or to request a full refund of the price of the computer, please contact your seller.

Safety warning notice

Reduce the possibility of heat-related injuries or of overheating the computer by following the practices described.

⚠ **WARNING!** To reduce the possibility of heat-related injuries or of overheating the computer, do not place the computer directly on your lap or obstruct the computer air vents. Use the computer only on a hard, flat surface. Do not allow another hard surface, such as an adjoining optional printer, or a soft surface, such as pillows or rugs or clothing, to block airflow. Also, do not allow the AC adapter to come into contact with the skin or a soft surface, such as pillows or rugs or clothing, during operation. The computer and the AC adapter provided by HP comply with the user-accessible surface temperature limits defined by applicable safety standards.

Table of contents

1 Computer features 1

Standard features 1

Integrated features 3

Fanless hub components 4

VESA hub components 4

Column hub components 5

No hub option 5

Locating the Engage One Pro power button 6

Locating the fanless hub power button 7

Adjusting the head unit 7

Tilting the head unit on a Pro stand 7

Adjusting the head unit on an Advanced stand 8

Engage One Pro serial number location 8

Fanless hub serial number location 8

Installing a security cable on the fanless hub 9

Installing a security cable on the Engage One Pro 9

2 Illustrated parts catalog 11

Computer major components 11

Miscellaneous parts 15

3 Routine care, drive guidelines, and disassembly preparation 18

Electrostatic discharge information 18

Generating static electricity 18

Preventing electrostatic damage to equipment 19

Personal grounding methods and equipment 19

Grounding the work area 20

Recommended materials and equipment 20

Operating guidelines 21

Routine care 21

General cleaning safety precautions 21

Removing dirt and debris from your computer 22

Cleaning your computer with a disinfectant 22

Enabling HP Easy Clean (select products only) 23

Cleaning the computer case 24

Cleaning the keyboard 24

Cleaning the monitor 24

Cleaning the mouse 25

Service considerations 25
Tools and software requirements 25
Screws 25
Cables and connectors 25
Lithium coin cell battery 26

4 Removal and replacement procedures 27

Preparation for disassembly 27
Stability base 27
Removing the stand cover 28
Hubs 29
Column hub 29
Advanced Fanless Hub 30
VESA hub 31
Removing the 10 inch customer-facing display (CFD) 32
Head unit from stand 34
Back plate 36
Expansion slot cover 37
Removing the 6.6 inch or 6.9 inch customer-facing display (CFD) 38
Barcode scanner 39
Fingerprint reader 40
Magnetic stripe reader (MSR) 42
Solid-state drive 43
Internal system cover 45
Memory modules (SODIMMs) 46
WLAN module 49
Power button board 51
Microphone board 52
Touch board 53
Backlight board 54
Camera 55
Speakers 56
Fans 57
Heat sink assembly 58
Processor 59
Battery 61
System board 62
Display panel 64
Antennas 65

5 Troubleshooting without diagnostics 67

Before you call for technical support 67
Helpful hints 68
Solving general problems 68
Cannot access the Computer Setup (F10) Utility when booting the computer 69
Computer appears locked up and will not turn off when the power button is pressed 69
Computer will not respond to keyboard or mouse 69
Computer date and time display is incorrect 69
There is no sound or sound volume is too low 69
Poor performance 70
Computer turned off with four red blinks and two white blinks 70
System does not turn on and the lights on the front of the computer are not blinking 71
Solving power problems 71
Power supply shuts down intermittently 71
Two red blinks then two beeps 72
Four red blinks then four beeps 72
Solving keyboard and mouse problems 72
Keyboard commands and typing are not recognized by the computer 73
Mouse does not respond to movement or is too slow 73
Solving hardware installation problems 73
A new device is not recognized as part of the system 74
Computer will not start 74
Three red blinks then two white blinks 74
Solving network problems 75
Network driver does not detect network controller 75
Network status link light never blinks 75
Diagnostics passes, but the computer does not communicate with the network 76
System setup utility reports unprogrammed EEPROM 76
Solving memory problems 76
System will not boot or does not function properly after installing additional memory modules 76
Out of memory error 77
Memory count during POST is wrong 77
Insufficient memory error during operation 77
Five red blinks then five beeps 77
Solving software problems 78
Computer will not start up and the HP logo does not appear 78
“Illegal Operation has Occurred” error message is displayed 78
6 Computer Setup (F10) Utility 79
Using Computer Setup (F10) Utilities 79
Computer Setup: Main 80
Computer Setup: Security 84
Computer Setup: Advanced 89
7 POST error messages 95
POST numeric codes and text messages 95

Interpreting system validation diagnostic front panel LEDs and audible codes....100
8 Password security and resetting CMOS....103
Changing a setup or power-on password....103
Deleting a setup or power-on password....103
Clearing and resetting the CMOS....104
9 Statement of memory volatility....106
Current BIOS steps....106
Nonvolatile memory usage....108
Questions and answers....109
Using HP Sure Start (select products only)....110
10 Power cord set requirements....111
General requirements....111
Japanese power cord requirements....111
Country-specific requirements....111
11 Specifications....113
Index....114

1 Computer features

This chapter provides you with an overview of your computer's features.

IMPORTANT: Your keyboard might include a Copilot key. Copilot in Windows (select products only) requires Windows® 11. Some features require a neural processing unit (NPU). The timing of feature delivery and availability varies by market and device. You must have a Microsoft account to use the Copilot feature. When the Copilot feature is not available, pressing the Copilot key opens the Bing search engine. See http://aka.ms/WindowsAIFeatures.

Standard features

To identify a typical computer configuration, read this section.

NOTE: Features vary depending on the model.

Landscape orientation



Portrait orientation



The Engage One Pro is designed for long-term deployment within general retail, hospitality, and other markets. It includes the following features:

- Integrated All-in-One (AiO) form factor available in landscape or portrait orientation
- Display panel (wide-aspect ratio); FHD 1920 × 1080 resolution, antiglare, antismudge, in the following sizes:
- Choice of mounting options:
  - Countertop mounting bracket
  - 100 mm × 100 mm VESA® mounting bracket
- Choice of stands:
  - Advanced stand with back-to-back Customer Facing Display (CFD) option
  - Engage One Pro stand, tilt
- Available hubs:

NOTE: You can also choose not to install a hub and use a 150 W power adapter to 140 W USB-C® dongle.

  - Fanless hub
  - Column hub
  - VESA hub
- Major HP peripherals:
  - Magnetic strip reader (MSR) integrated into the head unit as ordered) (on portrait and landscape orientation
  - Indicator light
  - LCD customer-facing display (CFD)

- 2D barcode scanner
- Biometric fingerprint reader
- NFC authentication

Integrated features

To identify the computer features, use this illustration and table.

NOTE: Your computer might look slightly different from the illustration in this section.

NOTE: You can configure the head unit in either landscape or portrait orientation. Features might vary depending on the model.

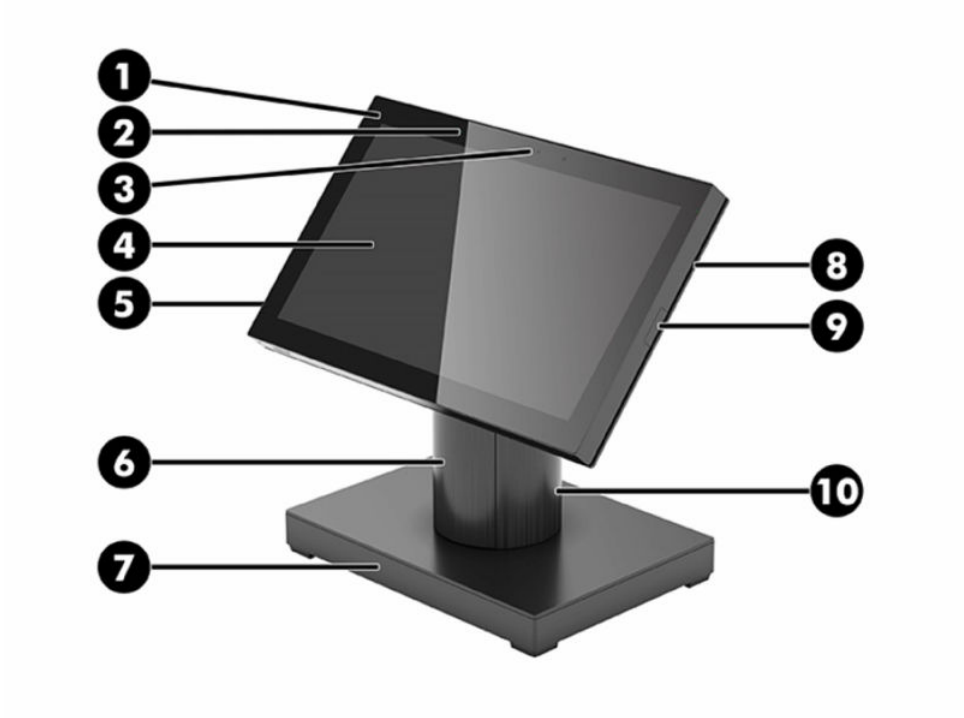

Table 1-1 **Identifying the integrated features**

	Features		
(1)	Near-field communication (NFC) (optional)	**(6)**	Stand
(2)	NFC indicator light	**(7)**	Fanless hub (optional)
(3)	Camera (optional)	**(8)**	Magnetic strip reader (MSR) (optional)
(4)	Display panel	**(9)**	Barcode scanner (optional)
(5)	Fingerprint reader (optional)	**(10)**	Internal column hub (select products only)

Fanless hub components

To identify the fanless hub features, use this illustration and table.

IMPORTANT: To avoid damage to the computer, **do not** plug a telephone cable into the cash drawer jack.

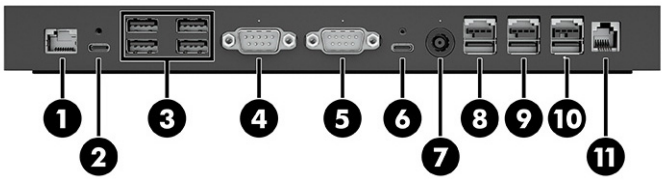

Table 1-2 **Identifying the fanless hub features**

	Features		
1	RJ-45 (network) jack	7	Power connector
2	USB Type-C® power delivery port (27 W) with Alternate Mode (downstream)	8	Powered USB 12 V port
3	USB ports (4)	9	Powered USB 12 V port
4	Powered serial port	10	Powered USB 24 V port
5	Powered serial port	11	RJ-11 (cash drawer) jack
6	USB Type-C port with power delivery (upstream)		

IMPORTANT: Use the fanless hub only with a HP-provided USB cable that is rated at 140 W.

VESA hub components

To identify the VESA hub features, use this illustration and table.



Table 1-3 Identifying the VESA hub features

	Features		
1	RJ-45 (network) jack	4	Powered USB 12 V port
2	Power connector	5	USB Type-C power delivery port (27 W) with Alternate Mode (downstream)
3	Powered USB 24 V port	6	USB ports (3)

Column hub components

To identify the column hub features, use this illustration and table.

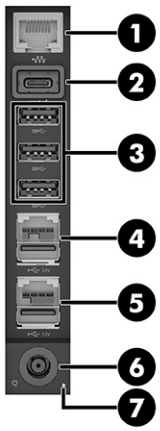

Table 1-4 Identifying the column hub features

	Features		
1	RJ-45 (network) jack	5	Powered USB 12 V port
2	USB Type-C power delivery port (27 W) with Alternate Mode (downstream)	6	Power connector
3	USB ports (3)	7	Power light
4	Powered USB 24 V port		

No hub option

You can power the computer without installing a hub.

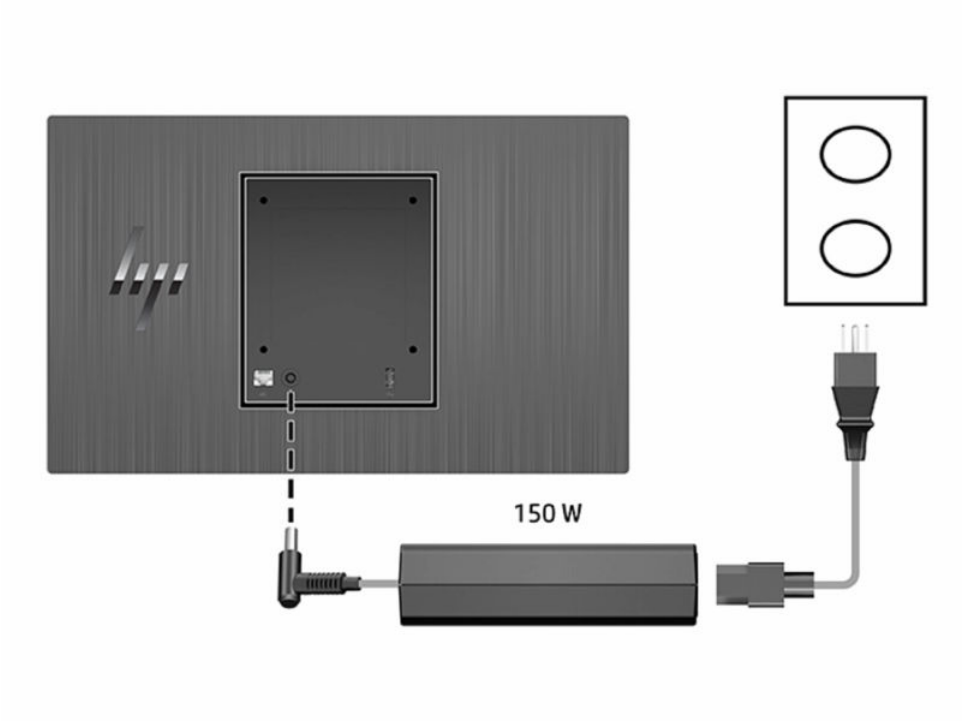

Locating the Engage One Pro power button

The computer power button is located on the bottom-left edge of the bezel.

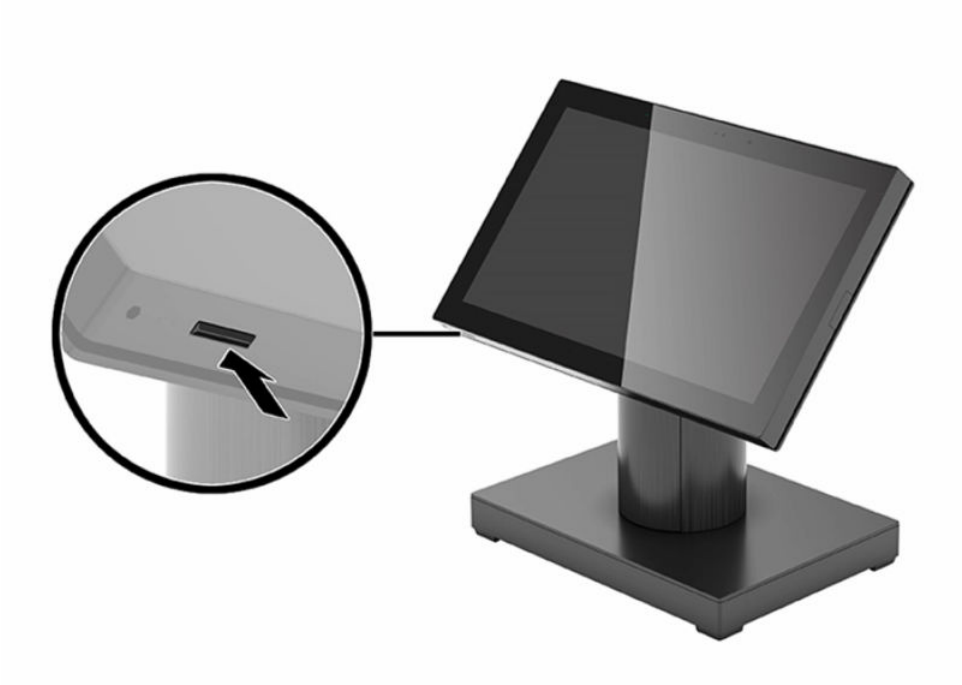

Locating the fanless hub power button

The power button is located on the underside of the hub.

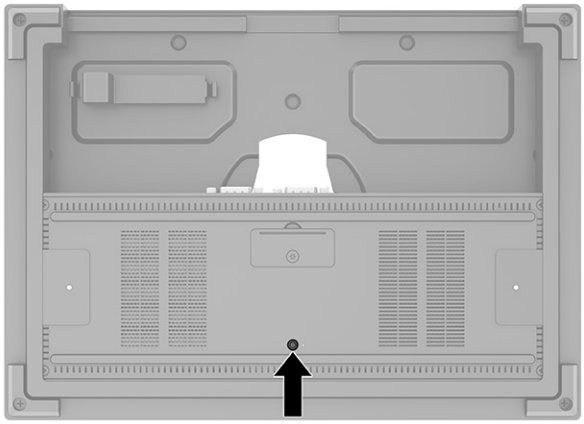

The head unit controls the fanless hub. When the head unit is turned off, the hub is turned off and power is not available from the hub ports. The exception is the hub USB port that connects to the head unit. That port remains powered so that it can continue to communicate with the head unit and allow the hub to turn back on when the head unit is turned on.

After the system has been turned off, you can press the power button on the underside of the hub to allow power to be available on the hub ports while the head unit remains turned off.

Adjusting the head unit

The stands offer various tilt and height-adjustment options.

Tilting the head unit on a Pro stand

You can tilt the computer head if needed for servicing.

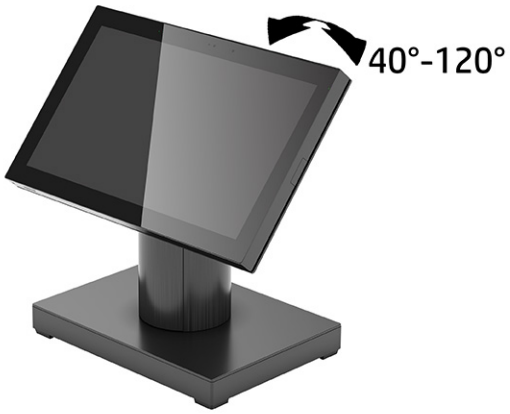

Adjusting the head unit on an Advanced stand

You can tilt and adjust the height of the computer head mounted to an Advanced stand.

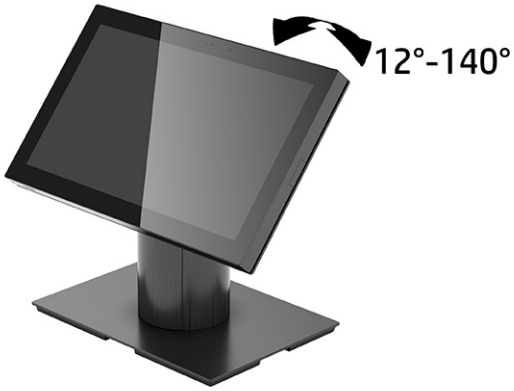

Engage One Pro serial number location

Each computer has a unique serial number and a product ID number that are located on the exterior of the computer. Keep these numbers available when you contact customer service for assistance.



IMPORTANT: When you order a spare kit, the spare kit contains a replacement label. After you replace the panel with the spare, you must copy the label information from the old panel to the new blank label, and then affix it to the new panel.

Fanless hub serial number location

Each hub has a unique serial number and a product ID number that are located on the exterior of the hub. Keep these numbers available when you contact customer service for assistance.

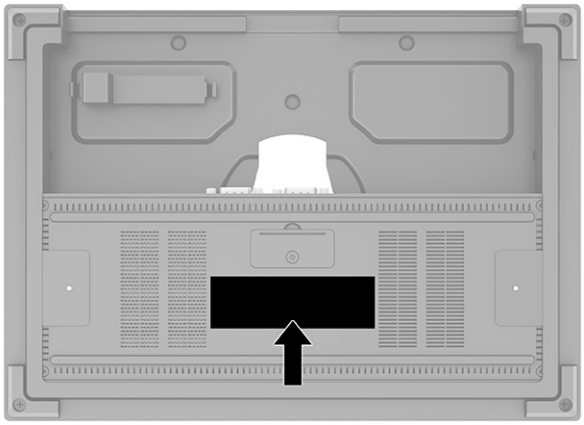

Regulatory information is located in the base plate or wall mount. Reinstall the base plate or wall mount after disassembly.

Installing a security cable on the fanless hub

You can secure the hub to a fixed object with an optional, keyed, cable lock security cable extension and an optional security cable available from HP.

NOTE: The security cable is sold separately as an aftermarket option kit only.

1. Locate the security cable slot on the back of the hub.
2. Insert the security cable lock into the slot, and then use the key to lock it.

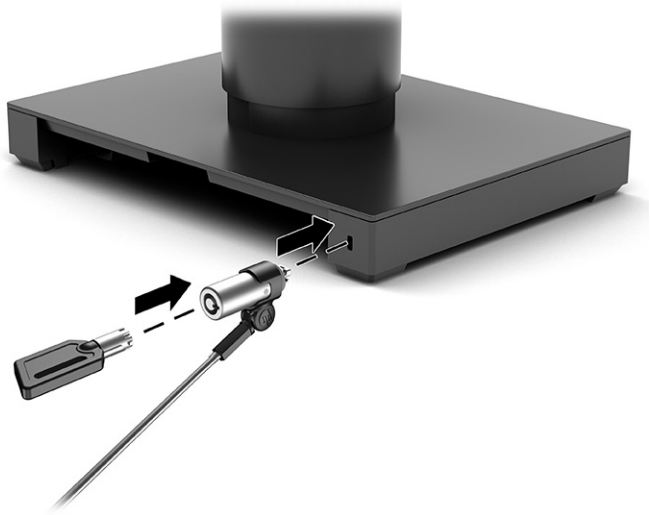

Installing a security cable on the Engage One Pro

NOTE: The security cable is sold separately as an aftermarket option kit only.

1. Remove the screw from the bottom of the column **(1)**.

2. Attach the security cable extension to the bottom of the column using the tamper-resistant screw **(2)** included with the security cable extension.
3. Secure the other end of the security cable extension with a security cable **(3)**.

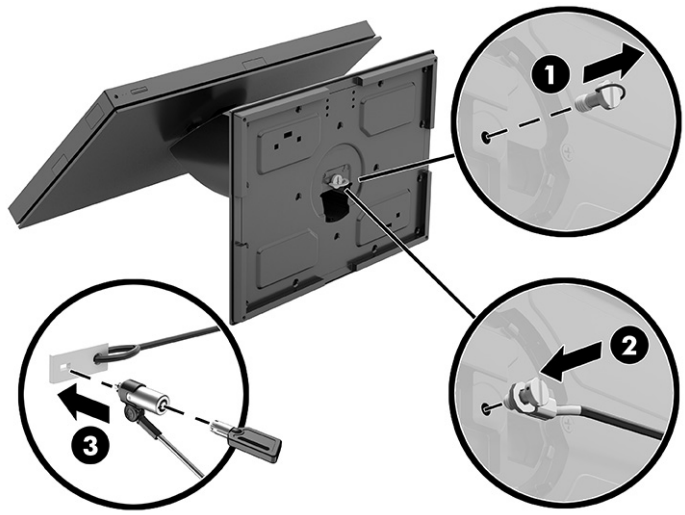

2 Illustrated parts catalog

Use this information to determine the spare parts that are available for the computer.

NOTE: HP continually improves and changes product parts. For complete and current information about supported parts for your computer, go to https://partsurfer.hp.com/, select your country or region, and then follow the on-screen instructions.

Computer major components

To identify the computer major components, use this illustration and table.

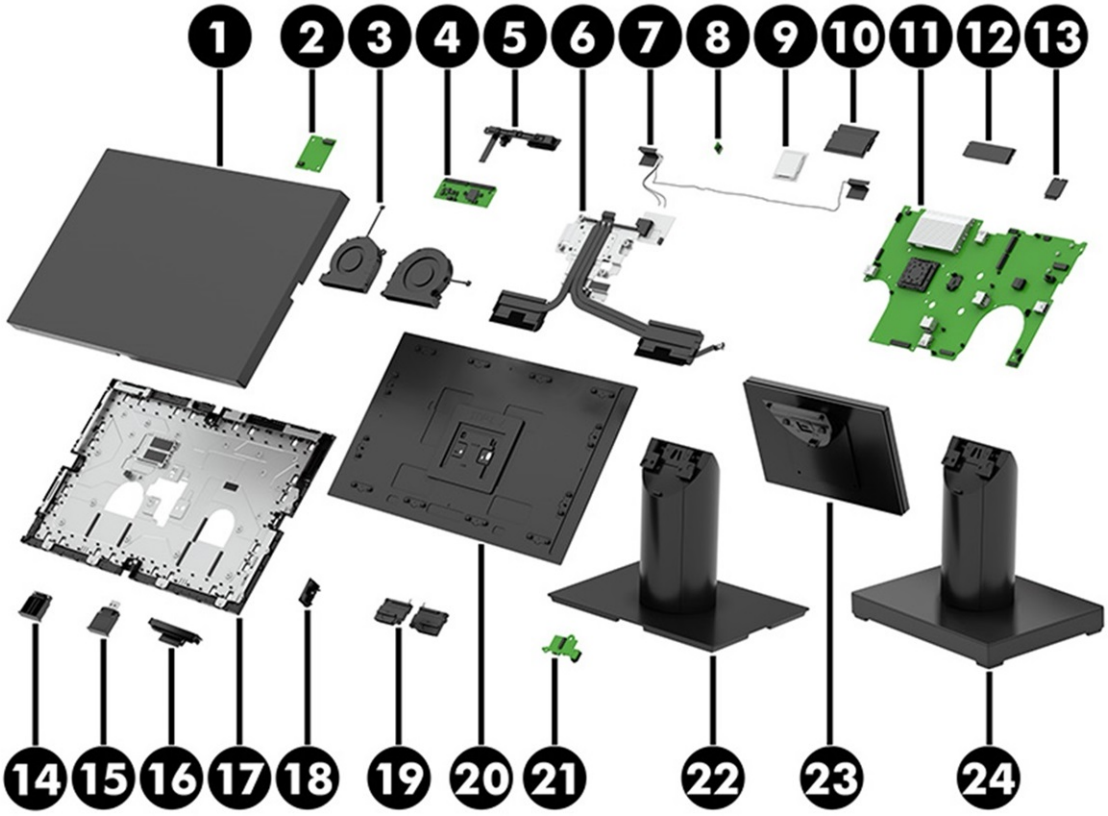

Table 2-1 Computer major components and their descriptions

Item	Description	Spare part number
(1)	Display panel	
	White, landscape orientation, without NFC	P32737-001
	Black, portrait orientation, without NFC	P32738-001
	White, portrait orientation, without NFC	P32739-001

Table 2-1 **Computer major components and their descriptions (continued)**

Item	Description	Spare part number
	Black, landscape orientation, without NFC	P26261-001
	Black, landscape orientation, with NFC	P32740-001
	White. landscape orientation, with NFC	P32741-001
	Black, portrait orientation, with NFC	P32742-001
	White, portrait orientation, with NFC	P32743-001
(2)	**Backlight board**	not available as spare part
(3)	**Fans**	
	Main	P26256-001
	Processor	P26257-001
(4)	**Touch board**	not available as spare part
(5)	**Camera assembly**	P27419-001
(6)	**Heat sink**	P26258-001
(7)	**Wireless antenna kit**	P26236-001
(8)	**Microphone board**	P27421-001
(9)	**Processor** (includes replacement thermal material)	
	Intel® Core® i7-14700T	N92027-003
	Intel Core i5-14500T	N92024-003
	Intel Core i3-14100T	N92022-003
	Intel Celeron® G6900TE	N56427-003
(10)	**Memory modules** (DDR5-5600)	
	32 GB	N50075-002
	32 GB (for use in the People's Republic of China [PRC])	N77400-002
	16 GB	N38627-002
	16 GB (for use in PRC)	N77399-002
	8 GB	N37792-002
	8 GB (for use in PRC)	N77398-002
(11)	**System board** (includes replacement thermal material)	
	IoT operating system, landscape models	P22249-301
	Windows operating system, landscape models	P22249-601
	IoT operating system, portrait models	P22250-301
	Windows operating system, portrait models	P22250-601
(12)	**Solid-state drive**	
	4 TB, TLC	N06219-002

Table 2-1 Computer major components and their descriptions (continued)

Item	Description	Spare part number
	2 TB, TLC	M52027-002
	2 TB, TLC (for use in PRC)	N77396-002
	1 TB, TLC	M16560-002
	1 TB, TLC (for use in PRC)	N77395-002
	1 TB	N45474-002
	1 TB (for use in PRC)	N77394-002
	512 GB, TLC	M17436-002
	512 GB, TLC (for use in PRC)	N77393-002
	512 GB	N45476-002
	512 GB (for use in PRC)	N77392-002
	256 GB	N45477-002
	256 GB (for use in PRC)	N77391-002
	256 GB, self-encrypting drive (SED)	N35225-002
(13)	**WLAN module**	
	Intel AX211 Wi-Fi® 6E + Bluetooth® 5.3	M53366-002
	Intel BE200 Wi-Fi 7 + Bluetooth 5.4, vPro™	N39882-002
	Intel BE200 Wi-Fi 7 + Bluetooth 5.4, non-vPro	N39883-002
(14)	**Expansion slot insert**	
(15)	**Barcode scanner**	
	Worldwide	P13696-001
	European Union	P13697-001
	Asia Pacific	P13698-001
(16)	**Magnetic stripe reader**	
	White	P25234-001
	Black	P25233-001
(17)	**Internal system cover**	
	Black	P26241-001
	White	P27622-001
(18)	**Fingerprint reader**	M29120-001
(19)	**Speakers**	P26265-001
(20)	**Rear cover**	
	Black, landscape	P26244-001
	White, landscape	P26247-001
	Black, portrait	P26250-001

Table 2-1 Computer major components and their descriptions (continued)

Item	Description	Spare part number
	White, portrait	P26253-001
(21)	**Power button board**	P26263-001
(22)	**Value stand**	M29490-001
(23)	**HP Engage One Pro 10" Display (CFD)**	
	10, VESA mount	P25756-001
	10w	P25757-001
	10t, VESA mount	P25758-001
	10tw	P25759-001
(24)	**Advanced stand** (black)	P28168-001
	Advanced stand (white)	P28169-001
*	**Stability base**	
	Black	M29486-001
	White	M29488-001
*	**HP Engage One Pro 6.6" Display (CFD)**	
	White	M14363-001
	Black	M14362-001
*	**Panel, 2 × 20, black**	N22373-001
*	**Fanless Hub**	
	Surround, white	M29307-001
	Surround, black	M30766-001
	White	M29305-001
	Black	M30765-001
*	**VESA hub**	
	White	M29306-001
	Black	M30767-001
*	**Hubless hub**	
	White	P26755-001
	Black	P26754-001
*	**Hub, no stand**	
	Pro stand	M29125-001
	Advanced stand	P28669-001

*not illustrated

Miscellaneous parts

To identify the various computer parts, use this table.

Table 2-2 **Miscellaneous parts and their descriptions**

Description	Spare part number
Antenna Kit, NFC module	P26238-001
Antenna cover	M10439-001
Cable, NFC module	P26254-001
AC adapter	
280 W	M52952-001
230 W	L76561-001
150 W	L68323-001
Adapter	
USB-to-serial	778835-001
USB-C to-HDMI 2.0	935325-001
USB-C to-VGA	831751-001
USB-A expansion	M52608-001
Stand hinge kit	P31835-001
Column hub DC holder	P27623-001
Advanced Fanless Hub surround bracket with spring	N08375-001
Counter mount kit	M29489-001
Expansion slot cover I/O door (black)	M30757-001
Expansion slot cover I/O door (white)	M45988-001
Expansion slot cover side I/O door (black)	M30758-001
Expansion slot cover side I/O door (white)	M45989-001
Fingerprint reader blank cover (black)	M30759-001
Fingerprint reader blank cover (white)	M45990-001
Indicator light	N33683-001
RJ-45 dust cover	N93617-001
Cables	
USB-C 5A, 20 V, passive, 2 m (6 ft), gray	P28166-001
USB-C 5A, 20 V, passive, 2 m (6 ft), black	P28167-001
USB-C 7A, 20 V, gen 2, active, 2 m (6 ft), IC 6000, black	P28668-001
USB-C 24 POS, round, 2 m (6 ft) + SR, RND, VESA B	P27909-001
USB-C, round, 2 m (6 ft) + SR, VESA, gray	P28170-001
RJ-45 network cable for use with CFD in Advanced Stand	P25232-001

Table 2-2 **Miscellaneous parts and their descriptions (continued)**

Description	Spare part number
RJ-45 network cable extender	N93616-001
Magnetic stripe reader cable	M42477-001
Switch cable	M42480-001
Backlight-to-PCA cable	M42487-001
Backlight-to-panel cable	M42085-001
USB 3.1 Gen 2 coil CM-CM, 20 V, 7 A, 0.25 m (0.75 ft)	M29124-001
USB 3.1 Gen 2 coil W CM-CM, 20 V, 7 A, 0.5 m (1.5 ft)	M31728-001
USB 3.1 Gen 2 coil W SM-CM, 20 V, 7 A, 2.0 m (6.0 ft)	M42082-001
USB 3.1 Gen 2 coil W CM-CM, 20 V 7 A, 0.25 m (.75 ft)	M42633-001
USB 3.1 Gen 2 coil W CM-SM, 20 V 7 A, 2.0 m (6.0 ft)	M42634-001
USB 3.1 Gen 2 coil SM-CM, 20 V 7 A, 2.0 m (6.0 ft)	M46001-001
USB 3.1 Gen 2 coil CM-CM, 20 V 7 A, 0.5 m (1.5 ft)	M50145-001
USB-A cable	M42087-001
Fingerprint reader cable	M42221-001
Touch board cable	M42486-001
Display (LVDS) cable	M42717-001
Cable routing clip	M90793-001
Cable routing plate	M90794-001
Power cord OPT-949 adapter	621829-001
Power cord (C13, 1.83 m [6 ft])	
Argentina	M82819-001
Australia	M82822-001
Brazil	M82820-001
Denmark	M82829-001
Europe	M82827-001
India	M82824-001
Israel	M82830-001
Italy	M82831-001
Japan	M82825-001
North America	M82821-001
The People's Republic of China	M82823-001
South Africa	M82832-001
Switzerland	M82833-001
Taiwan	M82826-001

Table 2-2 **Miscellaneous parts and their descriptions (continued)**

Description	Spare part number
United Kingdom	M82834-001
Power cord (C5, 1.0 m [3.3 ft], straight, premium with sticker)	
Argentina	L30811-001
Australia	L22327-001
Brazil	L30812-001
Denmark	L22322-001
Denmark (halogen free)	N17810-001
Europe	L22321-001
Europe (halogen free)	N17812-001
India	L22624-001
Italy	L30813-001
Israel	L22323-001
Japan	L22330-001
North America	L22319-001
The People's Republic of China	L21930-001
South Africa	L22325-001
South Korea	L22328-001
Switzerland	L22324-001
Switzerland (halogen free)	N17811-001
Taiwan	L22329-001
Thailand	L22326-001
The United Kingdom	L22320-001

3 Routine care, drive guidelines, and disassembly preparation

This information provides general service information for the computer. Adherence to the procedures and precautions is essential for proper service.

IMPORTANT: When the computer is plugged into an AC power source, DC voltage is always applied to the system board. You must disconnect the power cord from the power source before opening the computer to prevent electric shock, system board, or component damage.

Electrostatic discharge information

A sudden discharge of static electricity from your finger or other conductor can destroy static-sensitive devices or microcircuitry. Often the spark is neither felt nor heard, but damage occurs.

An electronic device exposed to electrostatic discharge (ESD) might not appear to be affected at all and can work perfectly throughout a normal cycle. The device might function normally for a while, but it has been degraded in the internal layers, reducing its life expectancy.

Networks built into many integrated circuits provide some protection, but in many cases, the discharge contains enough power to alter device parameters or melt silicon junctions.

IMPORTANT: To prevent damage to the device when you are removing or installing internal components, observe these precautions:

- Keep components in their electrostatic-safe containers until you are ready to install them.
- Before touching an electronic component, discharge static electricity by using the guidelines described in this section.
- Avoid touching pins, leads, and circuitry. Handle electronic components as little as possible.
- If you remove a component, place it in an electrostatic-safe container.

Generating static electricity

This table shows how humidity affects the electrostatic voltage levels generated by different activities. A product can be degraded by 700 V of static electricity.

- Different activities generate different amounts of static electricity.
- Static electricity increases as humidity decreases.

Multiple electric components can be packaged in plastic tubes, trays, or polystyrene foam.

Table 3-1 Static electricity occurrence based on activity and humidity

	Relative humidity		
Event	**55%**	**40%**	**10%**

Table 3-1 Static electricity occurrence based on activity and humidity (continued)

	Relative humidity		
Walking across carpet	7,500 V	15,000 V	35,000 V
Walking across vinyl floor	3,000 V	5,000 V	12,000 V
Motions of bench worker	400 V	800 V	6,000 V
Removing DIPs (dual in-line packages) from plastic tube	400 V	700 V	2,000 V
Removing DIPs from vinyl tray	2,000 V	4,000 V	11,500 V
Removing DIPs from polystyrene foam	3,500 V	5,000 V	14,500 V
Removing bubble pack from PCB (printed circuit board)	7,000 V	20,000 V	26,500 V
Packing PCBs in foam-lined box	5,000 V	11,000 V	21,000 V

Preventing electrostatic damage to equipment

Many electronic components are sensitive to ESD. Circuitry design and structure determine the degree of sensitivity. The following packaging and grounding precautions are necessary to prevent static electricity damage to electronic components.

- To avoid hand contact, transport products in static-safe containers such as tubes, bags, or boxes.
- Protect all electrostatic parts and assemblies with conductive or approved containers or packaging.
- Keep electrostatic-sensitive parts in their containers until they arrive at static-free stations.
- Place items on a grounded surface before removing them from their container.
- Always be properly grounded when touching a sensitive component or assembly.
- Avoid contact with pins, leads, or circuitry.
- Place reusable electrostatic-sensitive parts from assemblies in protective packaging or conductive foam.

Personal grounding methods and equipment

Use this equipment to prevent static electricity damage to electronic components.

- **Wrist straps** are flexible straps with a maximum of 1 MΩ ±10% resistance in the ground cords. To provide proper ground, wear a strap snug against bare skin. Verify that the ground cord is connected and fits snugly into the banana plug connector on the grounding mat or workstation.
- **Heel straps/Toe straps/Boot straps** can be used at standing workstations and are compatible with most types of shoes or boots. On conductive floors or dissipative floor mats, use them on both feet with a maximum of 1 MΩ ±10% resistance between the operator and ground.

Table 3-2 Static shielding protection levels

Static shielding protection levels	
Method	Voltage

Table 3-2 **Static shielding protection levels (continued)**

Static shielding protection levels	
Antistatic plastic	1,500 V
Carbon-loaded plastic	7,500 V
Metallized laminate	15,000 V

Grounding the work area

To prevent static damage at the work area, use these precautions.

- Cover the work surface with approved static-dissipative material. Provide a wrist strap connected to the work surface and properly grounded tools and equipment.
- Use static-dissipative mats, foot straps, or air ionizers to give added protection.
- Handle electrostatic sensitive components, parts, and assemblies by the case or PCB laminate. Handle them only at static-free work areas.
- Turn off power and input signals before inserting and removing connectors or test equipment.
- Use fixtures made of static-safe materials when fixtures must directly contact dissipative surfaces.
- Keep work area free of nonconductive materials such as ordinary plastic assembly aids and polystyrene foam.
- Use field service tools, such as cutters, screwdrivers, and vacuums, that are conductive.

Recommended materials and equipment

HP recommends these materials and equipment to prevent static electricity.

- Antistatic tape
- Antistatic smocks, aprons, or sleeve protectors
- Conductive bins and other assembly or soldering aids
- Conductive foam
- Conductive tabletop workstations with ground cord of 1 MΩ ±10% resistance
- Static-dissipative table or floor mats with hard tie to ground
- Field service kits
- Static awareness labels
- Wrist straps and footwear straps providing 1 MΩ ±10% resistance
- Material handling packages
- Conductive plastic bags
- Conductive plastic tubes
- Conductive tote boxes

- Opaque shielding bags
- Transparent metallized shielding bags
- Transparent shielding tubes

Operating guidelines

This information details how to prevent overheating and to help prolong the life of the computer.

- Keep the computer away from excessive moisture, direct sunlight, and extremes of heat and cold.
- Operate the computer on a sturdy, level surface. Leave a 10.2 cm (4 inch) clearance on all vented sides of the computer and above the monitor to permit the required airflow.
- Never restrict the airflow into the computer by blocking any vents or air intakes. Do not place the keyboard, with the keyboard feet down, directly against the front of the desktop unit as this also restricts airflow.
- Occasionally clean the air vents on all vented sides of the computer. Lint, dust, and other foreign matter can block the vents and limit the airflow. Be sure to unplug the computer before cleaning the air vents.
- Never operate the computer with the cover or side panel removed.
- Do not stack computers on top of each other or place computers so near each other that they are subject to each other's recirculated or preheated air.
- If the computer is to be operated within a separate enclosure, intake and exhaust ventilation must be provided on the enclosure, and the same operating guidelines listed previously still apply.
- Keep liquids away from the computer and keyboard.
- Never cover the ventilation slots on the monitor with any type of material.
- Install or enable power management functions of the operating system or other software, including Sleep states.
- You might notice a sound when flipping the screen. This is a normal part of the stand's dual hinge operation and does not impact durability or reliability, as the computer has undergone rigorous testing to ensure long-lasting performance.

Routine care

Use this information to properly care for your computer.

General cleaning safety precautions

Use this information to safely clean your computer.

⚠ CAUTION: To prevent electric shock or damage to components, never clean a product while it is turned on or plugged in.

- Never use solvents or flammable solutions to clean the computer.

- Never immerse any parts in water or cleaning solutions; apply any liquids to a clean cloth and then use the cloth on the component.
- Always unplug the computer when cleaning with liquids or damp cloths.
- Always unplug the computer before cleaning the keyboard, mouse, or air vents.
- Disconnect the keyboard before cleaning it.
- Wear safety glasses equipped with side shields when cleaning the keyboard.

Removing dirt and debris from your computer

Here are the recommended steps to clean dirt and debris from your computer.

1. Wear disposable gloves made of latex (or nitrile gloves, if you are latex-sensitive) when cleaning the surfaces.
2. Turn off your device and unplug the power cord and other connected external devices. Remove any installed batteries from items such as wireless keyboards.

> ⚠ **CAUTION:** To prevent electric shock or damage to components, never clean a product while it is turned on or plugged in.

3. Moisten a microfiber cloth with water. The cloth should be moist, but not dripping wet.

> **IMPORTANT:** To avoid damaging the surface, avoid abrasive cloths, towels, and paper towels.

4. Wipe the exterior of the product gently with the moistened cloth.

> **IMPORTANT:** Keep liquids away from the product. Avoid getting moisture in any openings. If liquid makes its way inside your HP product, it can cause damage to the product. Do not spray liquids directly on the product. Do not use aerosol sprays, solvents, abrasives, or cleaners containing hydrogen peroxide or bleach that might damage the finish.

5. Start with the display (if applicable). Wipe carefully in one direction, and move from the top of the display to the bottom. Finish with any flexible cables, like power cord, keyboard cable, and USB cables.
6. Be sure that surfaces have completely air-dried before turning the device on after cleaning.
7. Discard the gloves after each cleaning. Clean your hands immediately after you remove the gloves.

See Cleaning your computer with a disinfectant on page 22 for recommended steps to clean the high-touch, external surfaces on your computer to help prevent the spread of harmful bacteria and viruses.

Cleaning your computer with a disinfectant

The World Health Organization (WHO) recommends cleaning surfaces, followed by disinfection, as a best practice for preventing the spread of viral respiratory illnesses and harmful bacteria.

After cleaning the external surfaces of your computer using the steps in Removing dirt and debris from your computer on page 22, you might also choose to clean the surfaces with a disinfectant. A disinfectant that is within HP's cleaning guidelines is an alcohol solution consisting of 70% isopropyl alcohol and 30% water. This solution is also known as rubbing alcohol and is sold in most stores.

Follow these steps when disinfecting high-touch, external surfaces on your computer:

1. Wear disposable gloves made of latex (or nitrile gloves, if you are latex-sensitive) when cleaning the surfaces.
2. Turn off your device and unplug the power cord and other connected external devices. Remove any installed batteries from items such as wireless keyboards.

⚠ **CAUTION:** To prevent electric shock or damage to components, never clean a product while it is turned on or plugged in.

3. Moisten a microfiber cloth with a mixture of 70% isopropyl alcohol and 30% water. The cloth should be moist, but not dripping wet.

⚠ **CAUTION:** Do not use any of the following chemicals or any solutions that contain them, including spray-based surface cleaners: bleach, peroxides (including hydrogen peroxide), acetone, ammonia, ethyl alcohol, methylene chloride, or any petroleum-based materials, such as gasoline, paint thinner, benzene, or toluene.

IMPORTANT: To avoid damaging the surface, avoid abrasive cloths, towels, and paper towels.

4. Wipe the exterior of the product gently with the moistened cloth.

IMPORTANT: Keep liquids away from the product. Avoid getting moisture in any openings. If liquid makes its way inside your HP product, it can cause damage to the product. Do not spray liquids directly on the product. Do not use aerosol sprays, solvents, abrasives, or cleaners containing hydrogen peroxide or bleach that might damage the finish.

5. Start with the display (if applicable). Wipe carefully in one direction, and move from the top of the display to the bottom. Finish with any flexible cables, like power cord, keyboard cable, and USB cables.
6. Be sure that surfaces have completely air-dried before turning the device on after cleaning.
7. Discard the gloves after each cleaning. Clean your hands immediately after you remove the gloves.

Enabling HP Easy Clean (select products only)

HP Easy Clean helps you to avoid accidental input while you clean the computer surfaces. This software disables devices such as the keyboard, touch screen, and touchpad for a preset amount of time so that you can clean all computer surfaces.

1. Start HP Easy Clean in one of the following ways:
   - Select the **Start** menu, and then select **HP Easy Clean**.
   - Select the **HP Easy Clean** icon in the taskbar.
   - Select **Start**, and then select the **HP Easy Clean** tile.
2. Now that your device is disabled for a short period, see Removing dirt and debris from your computer on page 22 for the recommended steps to clean the high-touch, external surfaces on your computer. After you remove the dirt and debris, you can also clean the surfaces with a disinfectant. See Cleaning your computer with a disinfectant on page 22 for guidelines to help prevent the spread of harmful bacteria and viruses.

Cleaning the computer case

Follow all safety precautions before cleaning the computer case.

To clean the computer case, follow these procedures:

NOTE: You can also use these procedures to clean the tops of the keys, keyboard body, monitor body, or mouse body.

- To remove light stains or dirt, use plain water with a clean, lint-free cloth or swab.
- For stronger stains, use a mild dishwashing liquid diluted with water. Rinse well by wiping it with a cloth or swab dampened with clear water.
- For stubborn stains, use isopropyl (rubbing) alcohol. No rinsing is needed because the alcohol evaporates quickly and does not leave a residue.
- After cleaning, always wipe the unit with a clean, lint-free cloth.
- Occasionally clean the air vents on the computer. Lint and other foreign matter can block the vents and limit the airflow.

Cleaning the keyboard

Use this information to properly clean the keyboard. Follow all safety precautions before cleaning the keyboard.

To clean the tops of the keys or the keyboard body, follow the procedures described in Cleaning the computer case on page 24.

When cleaning debris from under the keys, review all rules in General cleaning safety precautions on page 21 before following these procedures.

CAUTION: Use safety glasses equipped with side shields before attempting to clean debris from under the keys.

- You can remove visible debris underneath or between the keys by vacuuming or shaking.
- You can use canned, pressurized air to clean debris from under the keys. Use caution because too much air pressure can dislodge lubricants applied under the wide keys.
- If you remove a key, use a specially designed key puller to prevent damage to the keys. This tool is available through many electronic supply outlets.

IMPORTANT: Never remove a wide leveled key (like the space bar) from the keyboard. If these keys are improperly removed or installed, the keyboard might not function properly.

- You can clean under a key with a swab moistened with isopropyl alcohol and squeezed out. Be careful not to wipe away lubricants necessary for proper key functions. Use tweezers to remove any fibers or dirt in confined areas. Allow the parts to air dry before reassembly.

Cleaning the monitor

Follow all safety precautions before cleaning dirt and debris from your computer. Use this information to properly clean the monitor.

- Wipe the monitor screen with a clean cloth moistened with water or with a towelette designed for cleaning monitors. Do not use sprays or aerosols directly on the screen; the liquid can seep into the housing and damage a component. Never use solvents or flammable liquids on the monitor.
- To clean the monitor body, follow the procedures in Cleaning the computer case on page 24.

Cleaning the mouse

Follow all safety precautions before cleaning your mouse. Use this information to properly clean the mouse.

To clean the mouse body, follow the procedures in Cleaning the computer case on page 24.

Service considerations

Keep these considerations in mind during the disassembly and assembly of the computer.

Tools and software requirements

Servicing the computer requires these tools.

- Torx T-15 screwdriver
- Flat-bladed screwdriver (can sometimes be used in place of the Torx screwdriver)
- Phillips P1 screwdriver
- Nonconductive, nonmarking pry tool
- Diagnostics software

Screws

The screws used in the computer are not interchangeable. They could have standard or metric threads and might be of different lengths.

If you use an incorrect screw during the reassembly process, it can damage the unit. HP strongly recommends that you keep all screws that you remove during disassembly with the removed part and then return them to their proper locations.

IMPORTANT: As you remove each subassembly from the computer, place it away from the work area to prevent damage.

Cables and connectors

Use this information to properly handle cables.

Apply only the tension required to seat or unseat the cables during insertion or removal from the connector. Handle cables by the connector whenever possible. In all cases, avoid bending or twisting the cables, and route the cables so that they cannot be caught or snagged by parts being removed or replaced.

IMPORTANT: When servicing this computer, be sure to place cables in their proper location during the reassembly process. Improper cable placement can damage the computer.

Lithium coin cell battery

The battery that comes with the computer provides power to the real-time clock and has a minimum lifetime of approximately three years.

See the removal and replacement chapter for replacement instructions.

⚠ **WARNING!** This computer contains a lithium battery. There is a risk of fire and chemical burn if the battery is handled improperly. Do not disassemble, crush, puncture, short external contacts, dispose of in water or fire, or expose it to temperatures higher than 140°F (60°C). Do not attempt to recharge the battery.

NOTE: Do not dispose of batteries, battery packs, and accumulators with general household waste. To forward them to recycling centers or proper disposal, use the public collection system or return them to HP, their authorized partners, or their agents.

4 Removal and replacement procedures

Adherence to these procedures and precautions is essential for proper service. After completing all necessary removal and replacement procedures, run the Diagnostics utility to verify that all components operate properly.

NOTE: Not all features listed in this guide are available on all computers.

NOTE: HP continually improves and changes product parts. For complete and current information about supported parts for your computer, go to https://partsurfer.hp.com/, select your country or region, and then follow the on-screen instructions.

NOTE: The HP Support YouTube Channel (in English) has videos that provide step-by-step removal and replacement instructions for many common parts and models.

Preparation for disassembly

Use this information to properly prepare to disassemble and reassemble the computer.

See Routine care, drive guidelines, and disassembly preparation on page 18 for initial safety procedures.

1. Remove all removable media from the computer.
2. Turn off the computer. If you are unsure whether the computer is off or in Hibernation, turn the computer on, and then shut it down through the operating system.

   IMPORTANT: Turn off the computer before disconnecting any cables.

   Regardless of the power state, voltage is always present on the system board as long as the system is plugged into an active AC outlet. In some systems, the cooling fan is on even when the computer is in the Standby or Suspend modes. Always disconnect the power cord before servicing a unit.
3. Disconnect the power from the computer by unplugging the power cord from the hub.
4. Disconnect all external devices from the computer and hubs.

CAUTION: Beware of sharp edges inside the chassis.

NOTE: During disassembly, label each cable as you remove it, and note its position and routing. Keep all screws with the removed components.

Stability base

To remove the stability base, use these procedures.

Table 4-1 Stability base descriptions and part numbers

Description	Spare part number
Black	M29486-001

Table 4-1 **Stability base descriptions and part numbers (continued)**

Description	Spare part number
White	M29488-001

Before removing the stability base, follow these steps:

- Prepare the computer for disassembly (Preparation for disassembly on page 27).

Remove the stability base:

1. On the bottom of the computer base, loosen the thumbscrew **(1)**.
2. Separate the base **(2)** from the stand.

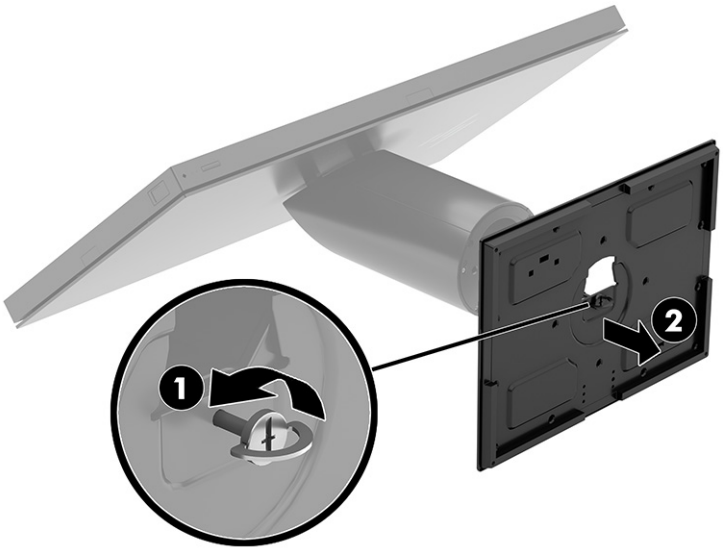

To install the stability base, reverse the removal procedures.

Removing the stand cover

To remove the stand cover, use this procedure and illustration.

- Slide the cover **(1)** up, and then remove it **(2)** from the stand.

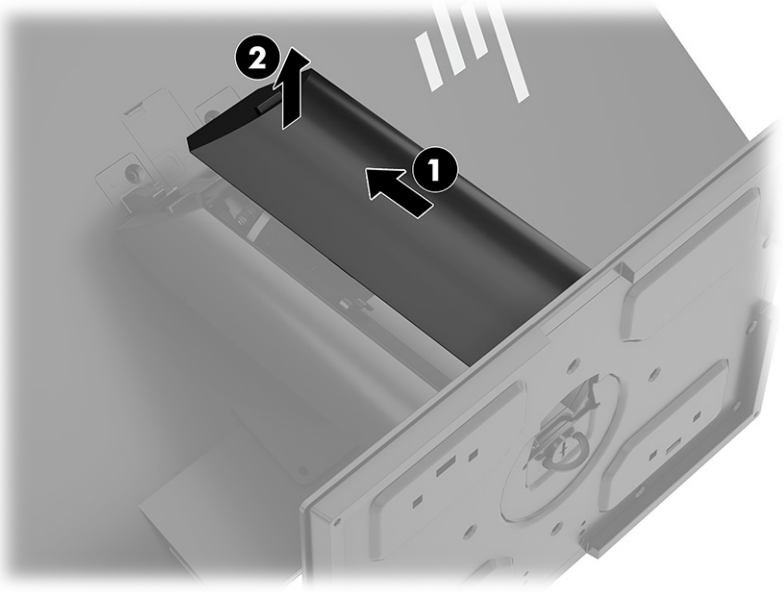

To install the stand cover, reverse the removal procedures.

Hubs

You can choose from three different hubs.

Column hub

To remove the column hub, use these procedures.

Before removing the column hub, follow these steps:

1. Prepare the computer for disassembly (Preparation for disassembly on page 27).
2. If installed, remove the stability base (Stability base on page 27).

Remove the column hub:

1. Remove the cover **(1)** from the top of the stand.

2. Disconnect the cable **(2)** from the hub.

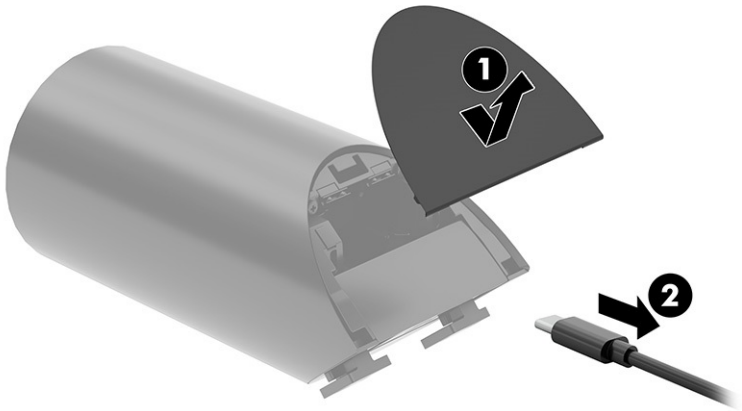

3. Loosen the four captive Phillips screws **(1)** that secure the hub to the stand.
4. Slide the hub **(2)** out of the stand.

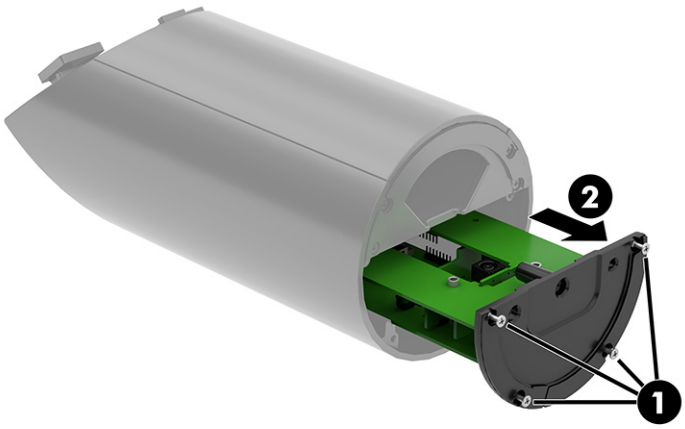

To install the column hub, reverse the removal procedures.

Advanced Fanless Hub

To remove the Advanced Fanless Hub, use these procedures.

Before removing the Advanced Fanless Hub, follow these steps:

1. Prepare the computer for disassembly (Preparation for disassembly on page 27).
2. Position the head unit facedown on a flat surface covered by protective sheet made of foam or a clean, dry cloth.

Remove the Advanced Fanless Hub:

1. Loosen the four Phillips screws **(1)** that secure the hub to the base.

2. Remove the hub **(2)** from the base.

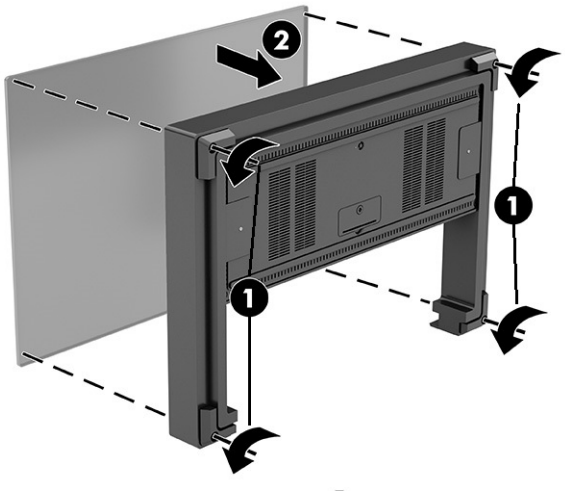

3. Remove the clip that secures the hub by pulling the two tabs **(1)** with green arrows toward the hub, and then pull the clip **(2)** up to remove it.
4. Slide the hub **(3)** back, and then lift it out of the frame.

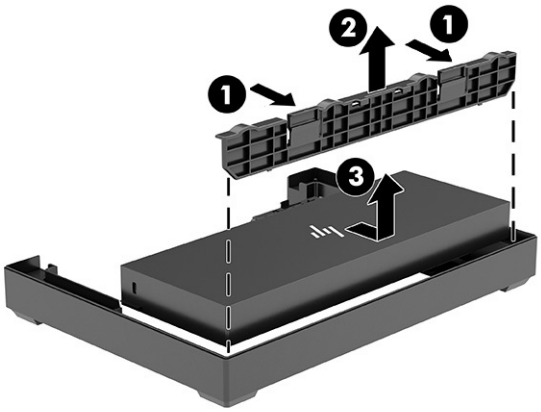

To install the Advanced Fanless Hub, reverse the removal procedures.

VESA hub

To remove the VESA hub, use these procedures.

Table 4-2 **VESA hub descriptions and part numbers**

Description	Spare part number
White	M29306-001
Black	M30767-001

Before removing the VESA hub, follow these steps:

1. Prepare the computer for disassembly (Preparation for disassembly on page 27).

2. Position the head unit facedown on a flat surface covered by protective sheet made of foam or a clean, dry cloth.

Remove the VESA hub:

1. Pull the cover straight up and off the VESA hub.

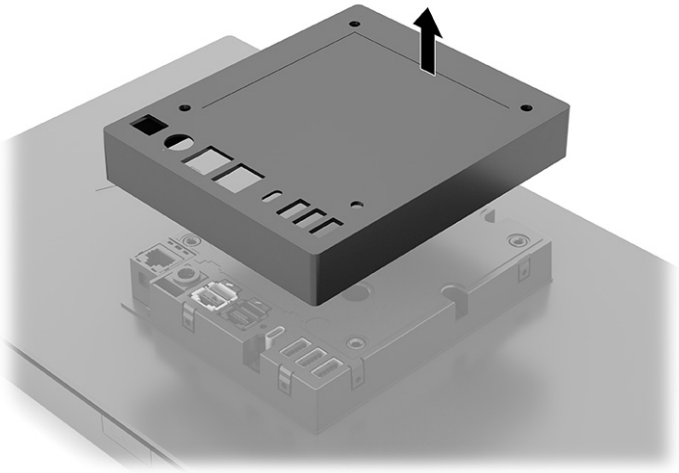

2. Loosen the two captive Phillips screws **(1)**, slide the hub back, and then pull it up and remove it from the head unit **(2)**.

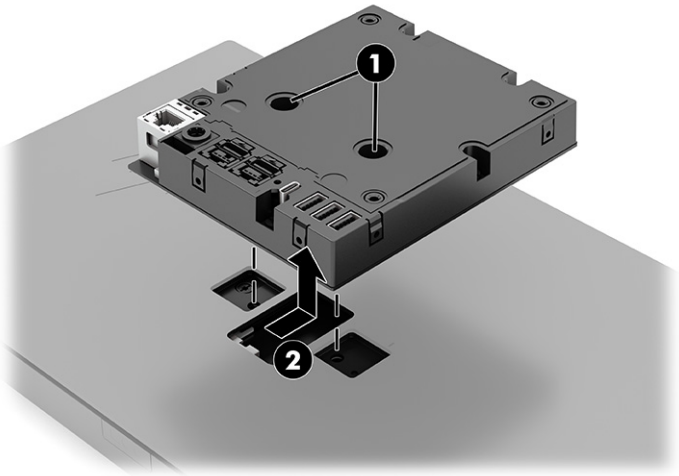

To install the VESA hub, reverse the removal procedures.

Removing the 10 inch customer-facing display (CFD)

To remove the 10 inch customer-facing display, use this procedure and illustration.

Table 4-3 10 inch customer-facing display descriptions and part numbers

Description	Spare part number
10, VESA mount	P25756-001

Table 4-3 10 inch customer-facing display descriptions and part numbers (continued)

Description	Spare part number
10w	P25757-001
10t, VESA mount	P25758-001
10tw	P25759-001

Before removing the 10 inch customer-facing display, follow this step:

- Prepare the computer for disassembly (Preparation for disassembly on page 27).

1. Disconnect the CFD cable from the hub (bottom hub shown).

NOTE: If the CFD cable is connected to the column hub inside the stand, remove the stand cover (Removing the stand cover on page 28), and then disconnect the cable.

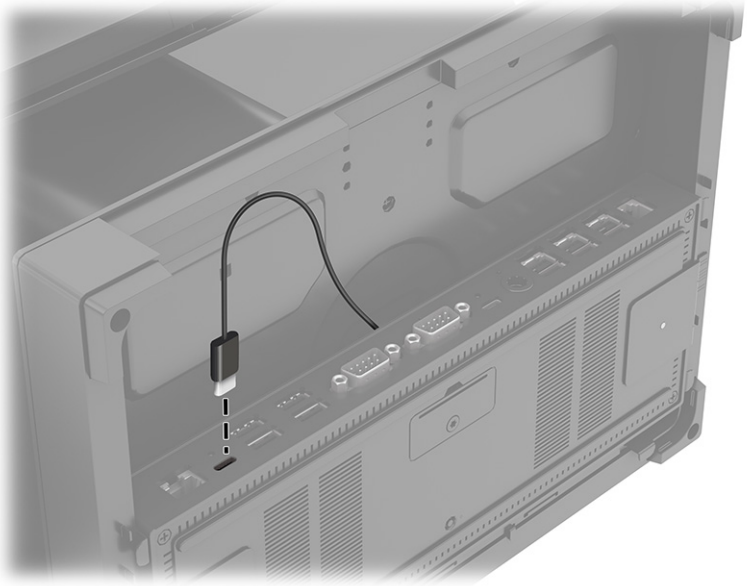

2. Remove the two screw covers **(1)** from the top of the stand.

3. Loosen the two captive Phillips screws **(2)**, and then lift the CFD **(3)** off the head unit.

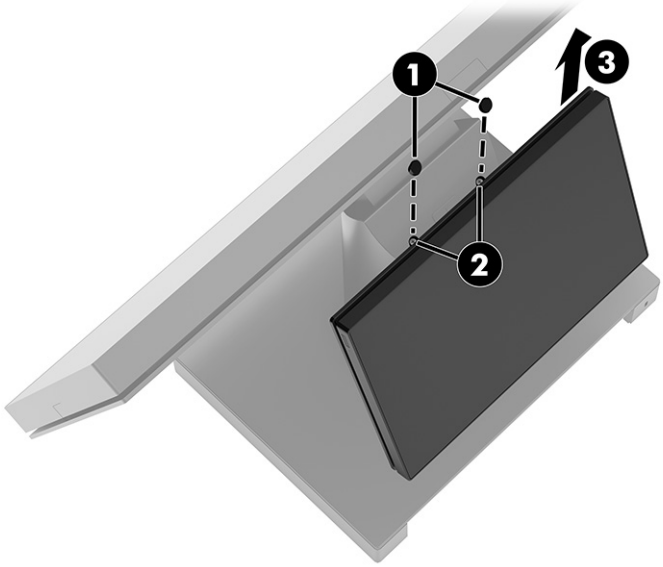

4. (Engage One Pro G2 Advanced Stand only) Remove the two display head stopper brackets from the stand by removing the Phillips screw **(1)** from each bracket, and then removing both brackets **(2)** from the stand.

NOTE: For clarity, the following image shows the stand without the display head installed.

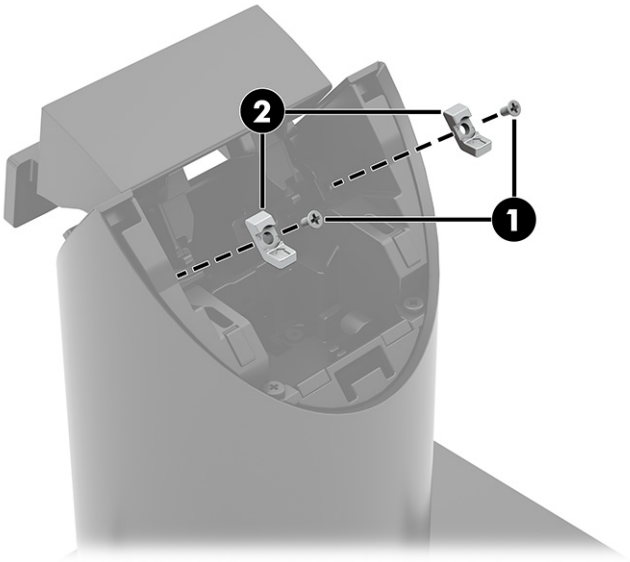

To install a 10 inch customer-facing display, reverse the removal procedures.

Head unit from stand

To remove the head unit from the stand, use these procedures.

Table 4-4 **Head unit and stand descriptions and part numbers**

Description	Spare part number
Advanced stand, black	P28168-001
Advanced stand, white	P28169-001
Value stand	M29490-001

Before removing the head unit from the stand, follow these steps:

- Prepare the computer for disassembly (Preparation for disassembly on page 27).

Remove the head unit from the stand:

1. Place the computer display-side down onto a soft cloth on a table.
2. Rotate the stand so you can access the cables underneath.

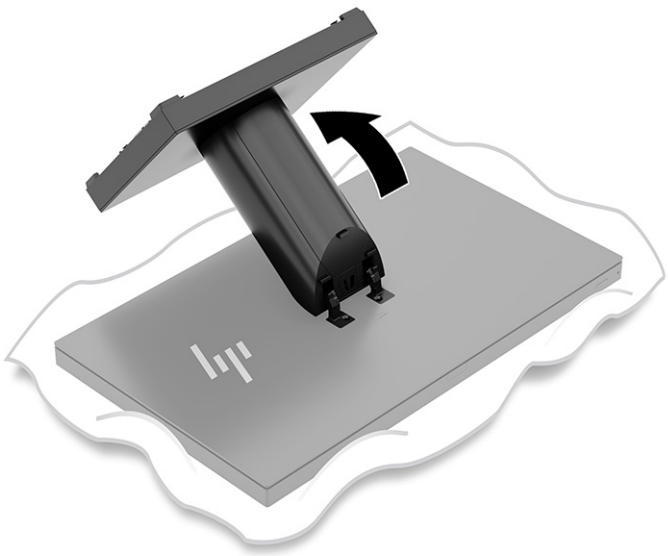

3. Press the cable cover release latch **(1)**, and the remove the cable cover **(2)** from the head unit.

4. Disconnect the network cable **(3)** and the USB cable **(4)** from the head unit.

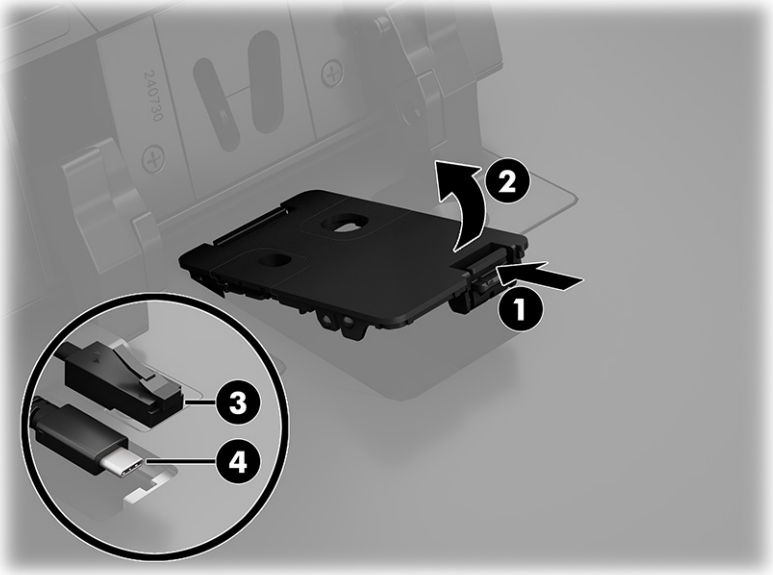

5. Remove the two screws **(1)**, and then separate the stand from the head unit **(2)**.

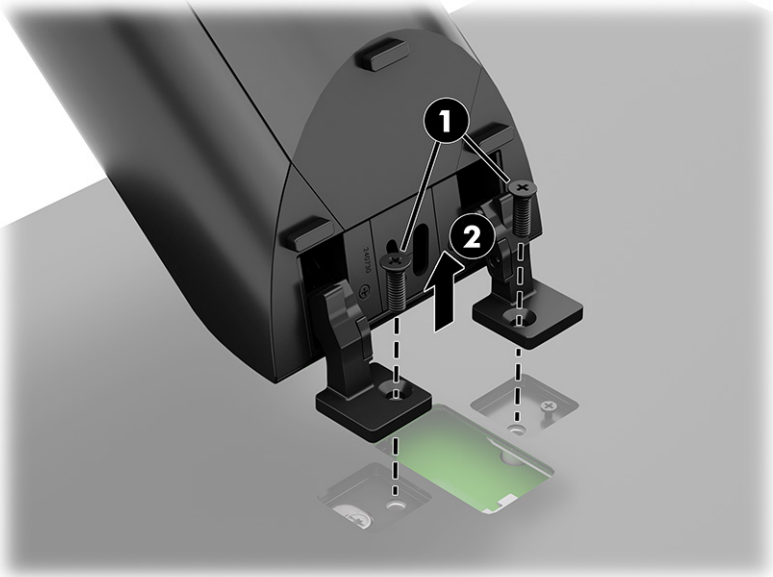

To install the head unit to the stand, reverse the removal procedures.

Back plate

To remove the back plate, use these procedures.

Table 4-5 Back plate descriptions and part numbers

Description	Spare part number
Black, landscape	P26244-001

Table 4-5 Back plate descriptions and part numbers (continued)

Description	Spare part number
White, landscape	P26247-001
Black, portrait	P26250-001
White, portrait	P26253-001

Before removing the back plate, follow these steps:

1. Prepare the computer for disassembly (Preparation for disassembly on page 27).
2. Remove the head unit from the stand (Head unit from stand on page 34).

Remove the back plate:

1. Loosen the captive Phillips screw **(1)** that secures the back plate to the head unit.
2. Slide the back plate **(2)** toward the bottom of the head unit, and then lift the back plate **(3)** off the head unit.

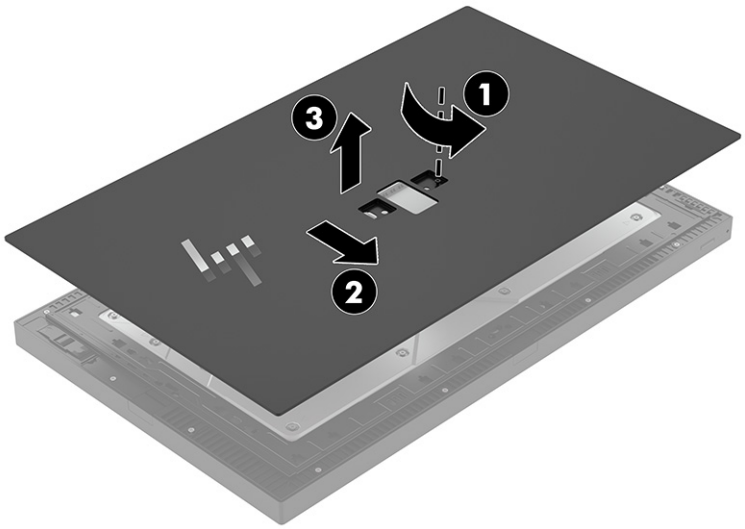

To install the back plate, reverse the removal procedures.

Expansion slot cover

Covers are used on empty expansion slots on each side of the head unit. To remove an expansion slot cover, use these procedures.

Table 4-6 Expansion slot cover descriptions and part numbers

Description	Spare part number
Expansion slot cover I/O door (black)	M30757-001
Expansion slot cover I/O door (white)	M45988-001

Table 4-6 Expansion slot cover descriptions and part numbers (continued)

Description	Spare part number
Expansion slot cover side I/O door (black)	M30758-001
Expansion slot cover side I/O door (white)	M45989-001

Before removing an expansion slot cover, follow these steps:

1. Prepare the computer for disassembly (Preparation for disassembly on page 27).
2. Remove the head unit from the stand (Head unit from stand on page 34).
3. Remove the back plate from the head unit (Back plate on page 36).

Remove an expansion slot cover:

1. Remove the two Phillips screws **(1)** that secure the cover to the head unit.
2. Slide the cover **(2)** out of the head unit.

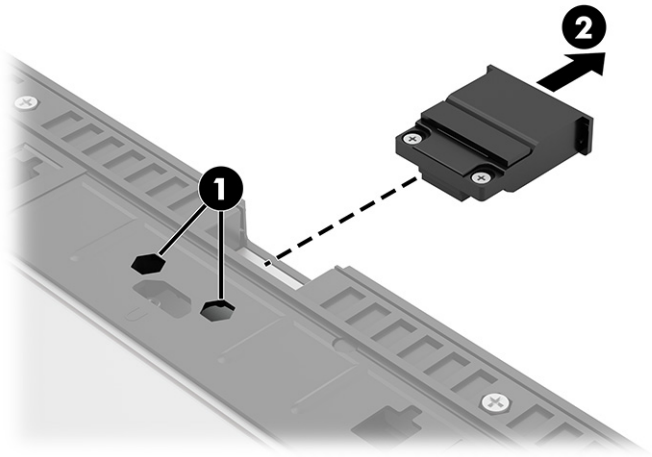

To install an expansion slot cover, reverse the removal procedure.

Removing the 6.6 inch or 6.9 inch customer-facing display (CFD)

To remove the customer-facing display, use this procedure and illustration.

Table 4-7 6.6-inch or 6.9 inch customer-facing display descriptions and part numbers

Description	Spare part number
White	M14363-001
Black	M14362-001

Before removing the customer-facing display, follow these steps:

1. Prepare the computer for disassembly (Preparation for disassembly on page 27).
2. Remove the head unit from the stand (Head unit from stand on page 34).
3. Remove the back plate from the head unit (Back plate on page 36).

- Loosen the two captive Phillips screws **(1)**, and then pull the CFD **(2)** out of the head unit.

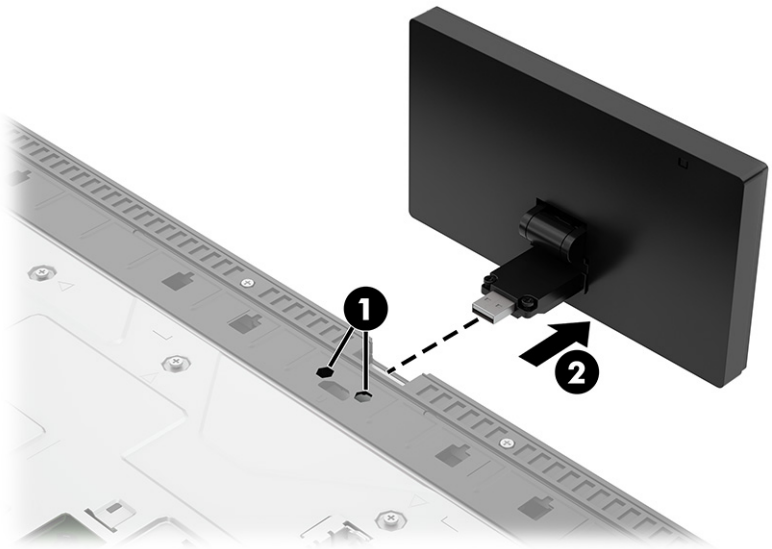

To install a customer-facing display, reverse the removal procedures.

Barcode scanner

To remove the barcode scanner, use these procedures.

Table 4-8 Barcode scanner descriptions and part numbers

Description	Spare part number
Worldwide	P13696-001
European Union	P13697-001
Asia Pacific	P13698-001

TIP: Photo orientation changes based on which expansion port the scanner is connected to (top, left, right, or bottom). When the scanner is attached to the left or right port, the camera sensor is at a 90° angle instead of the normal 180° angle.

If an image captured by the barcode scanner does not display in the correct orientation, you can change the orientation of the image. Select **Edit Image** after capturing the image, and then select the options from the **Image Rotation** list to rotate the image.

To configure photo orientation for the scanner:

1. Launch the N-Series Configuration Utility.
2. Select **Online Device**, and then select **Configure Device**.
3. Select **Settings**, select **Systems Settings**, select **Device Settings**, and then select **Image Mirror**.
4. Select the setting from the list.
5. Select **Save to Device**.

Before removing the barcode scanner, follow these steps:

1. Prepare the computer for disassembly (Preparation for disassembly on page 27).
2. Remove the head unit from the stand (Head unit from stand on page 34).
3. Remove the back plate from the head unit (Back plate on page 36).

Remove the barcode scanner:

- Loosen the two Phillips screws **(1)**, and then pull the barcode scanner **(2)** out of the slot.

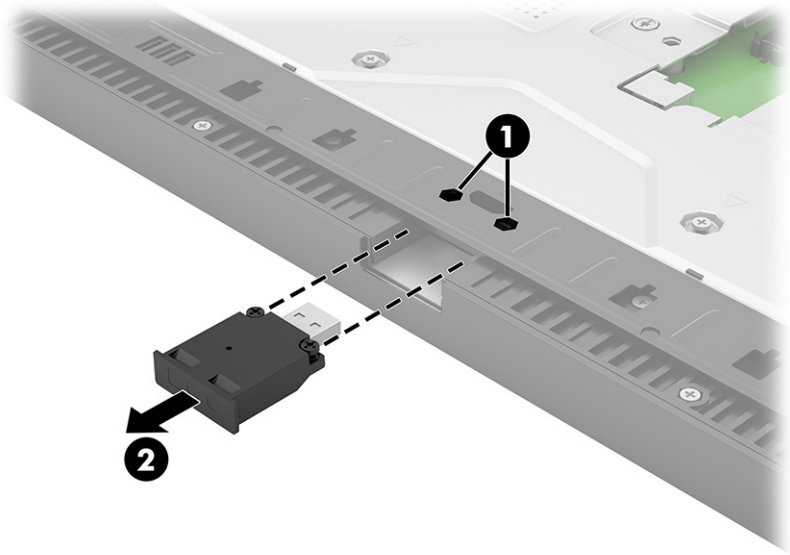

To install the barcode scanner, reverse the removal procedures.

Fingerprint reader

To remove the fingerprint reader, use these procedures.

Table 4-9 Fingerprint reader description and part number

Description	Spare part number
Fingerprint reader	M29120-001

Before removing the fingerprint reader, follow these steps:

1. Prepare the computer for disassembly (Preparation for disassembly on page 27).
2. Remove the head unit from the stand (Head unit from stand on page 34).
3. Remove the back plate from the head unit (Back plate on page 36).

Remove the fingerprint reader:

1. Pull the fingerprint reader cover straight up and off the computer.

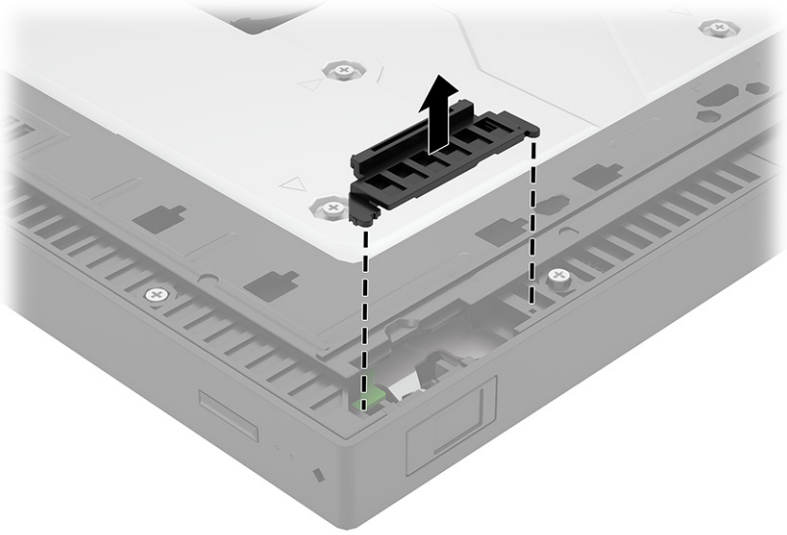

2. Loosen the captive Phillips screw **(1)**, and then remove the fingerprint reader **(2)** from the slot.
3. Disconnect the fingerprint reader cable **(3)** from the fingerprint reader.

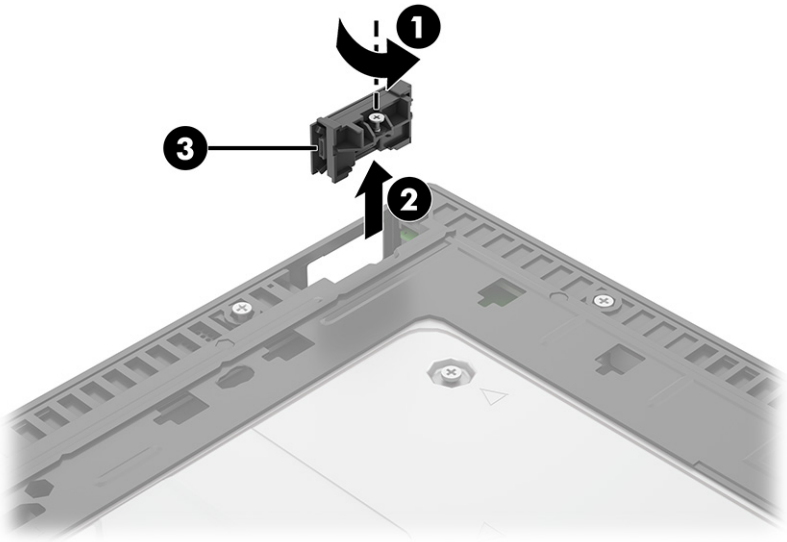

To install the fingerprint reader, reverse the removal procedures.

Magnetic stripe reader (MSR)

To remove the magnetic stripe reader, use these procedures.

Table 4-10 **Magnetic stripe reader descriptions and part numbers**

Description	Spare part number
White	P25234-001
Black	P25233-001

Before removing the magnetic stripe reader, follow these steps:

1. Prepare the computer for disassembly (Preparation for disassembly on page 27).
2. Remove the head unit from the stand (Head unit from stand on page 34).
3. Remove the back plate from the head unit (Back plate on page 36).

Remove the magnetic stripe reader:

1. Remove the MSR bracket from the computer.

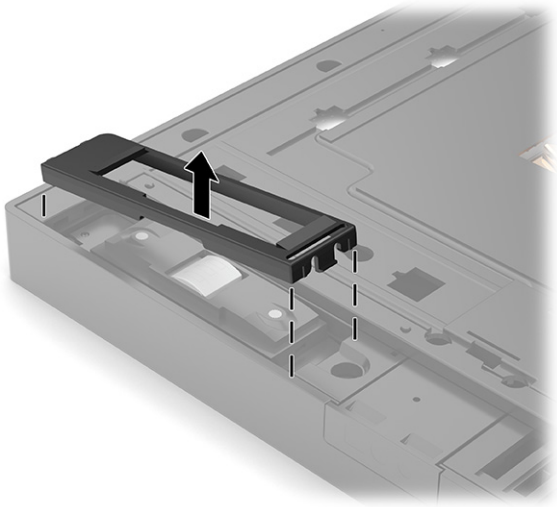

2. Disconnect the cable from the system board connector **(1)**.

3. Loosen the two captive Phillips screws **(2)**, and then remove the magnetic stripe reader **(3)** from the computer.

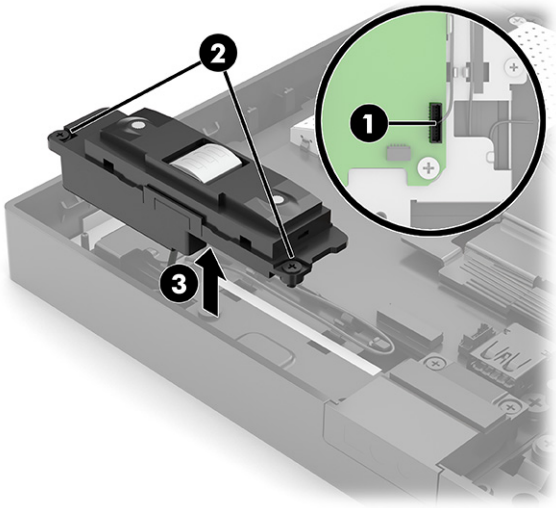

To install the magnetic stripe reader, reverse the removal procedures.

Solid-state drive

To remove the solid-state drive (SSD), use these procedures.

Table 4-11 SSD descriptions and part numbers

Description	Spare part number
4 TB, TLC	N06219-002
2 TB, TLC	M52027-002
2 TB, TLC (for use in PRC)	N77396-002
1 TB, TLC	M16560-002
1 TB, TLC (for use in PRC)	N77395-002
1 TB	N45474-002
1 TB (for use in PRC)	N77394-002
512 GB, TLC	M17436-002
512 GB, TLC (for use in PRC)	N77393-002
512 GB	N45476-002
512 GB (for use in PRC)	N77392-002
256 GB	N45477-002
256 GB (for use in PRC)	N77391-002
256 GB, self-encrypting drive (SED)	N35225-002

Before removing the SSD, follow these steps:

1. Prepare the computer for disassembly (Preparation for disassembly on page 27).
2. Remove the head unit from the stand (Head unit from stand on page 34).
3. Remove the back plate from the head unit (Back plate on page 36).

Remove the SSD:

1. Loosen the two captive Phillips screws **(1)** that secure the SSD cover to the computer.
2. Lift the top of the cover **(2)** upward, and then remove the cover **(3)** from the computer.

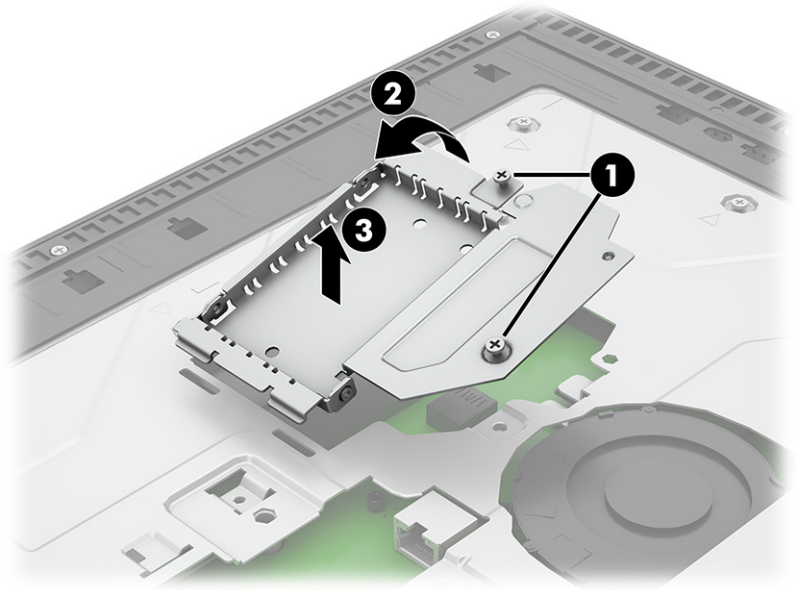

3. Remove the Phillips screw **(1)** that secures the drive.
4. Pull the drive **(2)** out of the system board connector.

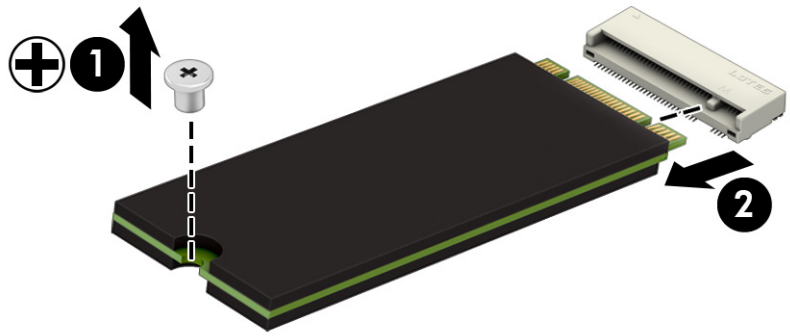

To install the SSD, reverse the removal procedure.

When installing the SSD cover, be sure thermal pads are installed as shown in the following illustration.

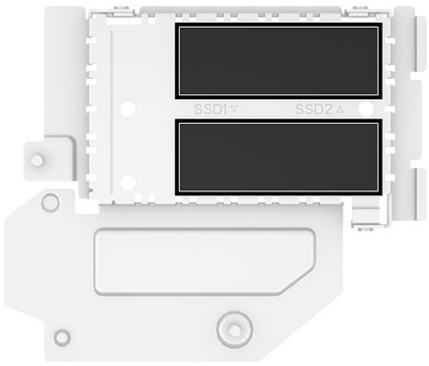

Internal system cover

To remove the internal system cover, use these procedures.

Table 4-12 **Internal system cover descriptions and part numbers**

Description	Spare part number
Black	P26241-001
White	P27622-001

Before removing the internal system cover, follow these steps:

1. Prepare the computer for disassembly (Preparation for disassembly on page 27).
2. Remove the head unit from the stand (Head unit from stand on page 34).
3. Remove the back plate from the head unit (Back plate on page 36).

Remove the internal system cover:

- Loosen the 29 captive Phillips screws **(1)**, and then remove the cover **(2)** from the head unit.

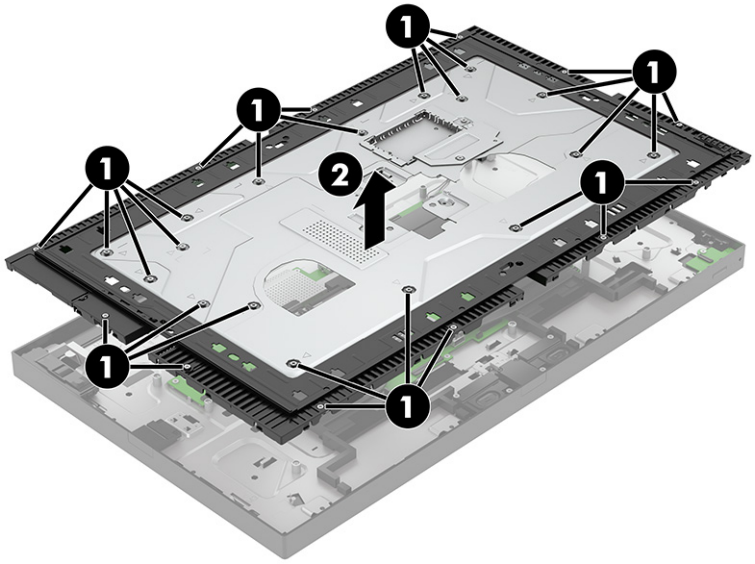

To install the internal system cover, reverse the removal procedures.

When you install the internal system cover, be sure thermal pads are installed on the SSD door as shown in the following illustration:

(1): Gray thermal pads

(2): Black thermal pads

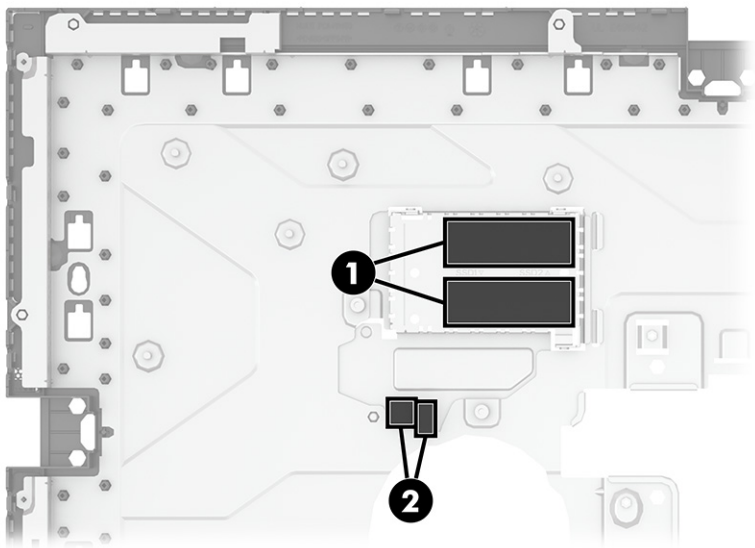

Memory modules (SODIMMs)

To remove the memory modules, use this information and these procedures.

Table 4-13 **Memory module descriptions and part numbers**

Description	Spare part number
32 GB	N50075-002
32 GB (for use in the People's Republic of China [PRC])	N77400-002
16 GB	N38627-002
16 GB (for use in PRC)	N77399-002
8 GB	N37792-002
8 GB (for use in PRC)	N77398-002

The memory sockets on the system board can be populated with up to two industry-standard SODIMMs. These memory sockets are populated with at least one preinstalled SODIMM. To achieve the maximum memory support, you can populate the system board with up to 64 GB of memory.

Table 4-14 **Memory module specifications**

Component	Specification
Memory modules	1.1 volt DDR5-SDRAM memory modules
Compliance	Unbuffered non-ECC DDR5-5600 MHz-compliant
Pins	Industry-standard 260-pin containing the mandatory Joint Electronic Device Engineering Council (JEDEC) specification
Slots	2
Maximum memory	64 GB
Supported	2 Gbit, 4 Gbit, 8 Gbit, and 16 Gbit non-ECC memory technologies single-sided and double-sided memory modules

NOTE: The system does not operate properly if you install unsupported memory modules. Memory modules constructed with ×8 and ×16 DDR devices are supported; memory modules constructed with ×4 SDRAM are not supported.

Use this information to correctly populate SODIMM sockets:

There are two SODIMM sockets on the system board, with one socket per channel. The sockets are labeled DIMM1 and DIMM3. The DIMM1 socket operates in memory channel A. The DIMM3 socket operates in memory channel B.

IMPORTANT: You must disconnect the power cord and wait approximately 30 seconds for the power to drain before adding or removing memory modules. Regardless of the power state, voltage is always supplied to the memory modules as long as the computer is plugged into an active AC outlet. Adding or removing memory modules while voltage is present can cause irreparable damage to the memory modules or system board.

IMPORTANT: When handling a memory module, be careful not to touch any of the contacts. Doing so can damage the module.

The memory module sockets have gold-plated metal contacts. When upgrading the memory, use memory modules with gold-plated metal contacts to prevent corrosion, oxidation, or both, resulting from having incompatible metals in contact with each other.

Static electricity can damage the electronic components of the computer or optional cards. Before beginning these procedures, be sure that you are discharged of static electricity by briefly touching a grounded metal object.

The system automatically operates in single-channel mode, dual-channel mode, or flex mode, depending on how the SODIMMs are installed.

- The system operates in single-channel mode if the SODIMM sockets are populated in one channel only.
- The system operates in a higher-performing dual-channel mode if the memory capacity of the SODIMM in channel A is equal to the memory capacity of the SODIMM in channel B.
- The system operates in flex mode if the memory capacity of the SODIMM in channel A is not equal to the memory capacity of the SODIMM in channel B. In flex mode, the channel populated with the least amount of memory describes the total amount of memory assigned to dual channel and the remainder is assigned to single channel. If one channel has more memory than the other, assign the larger amount to channel A.
- In any mode, the maximum operational speed is determined by the slowest SODIMM in the system.

Before replacing the memory modules, follow these steps:

1. Prepare the computer for disassembly (Preparation for disassembly on page 27).
2. Remove the head unit from the stand (Head unit from stand on page 34).
3. Remove the back plate from the head unit (Back plate on page 36).
4. Remove the internal system cover (Internal system cover on page 45).

Replace a memory module:

1. Press in on the sides **(1)** of the memory cover, and then lift the cover **(2)** off the system board.

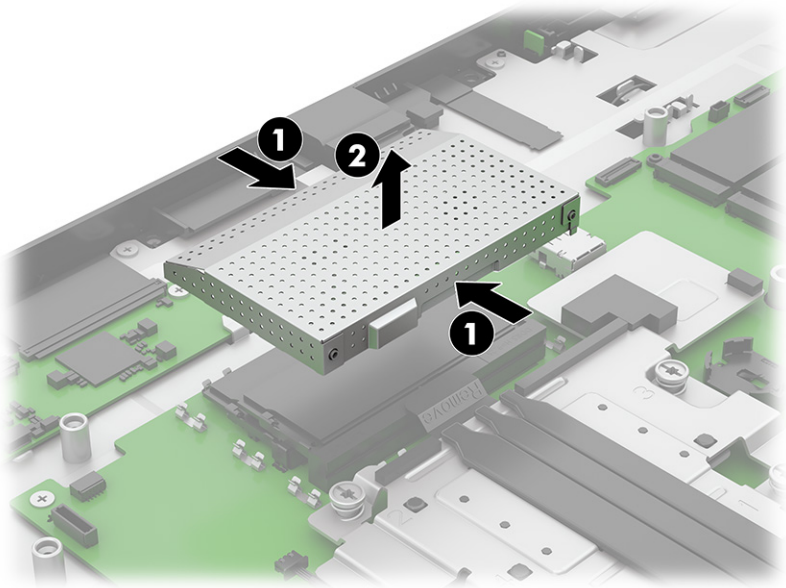

2. To remove a memory module, press outward on the two latches **(1)** on each side of the module, and then pull the module **(2)** out of the socket.

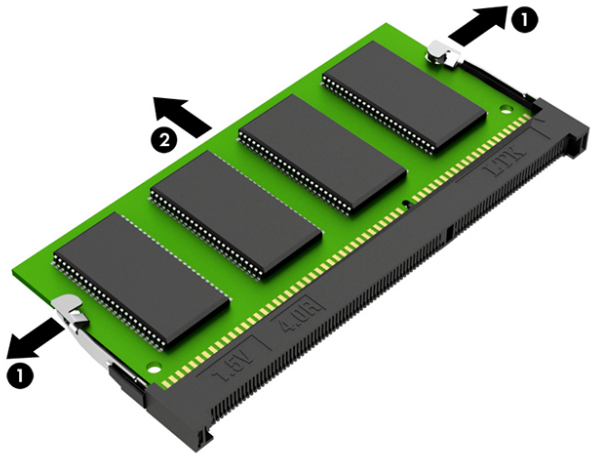

3. Match the notch on the module with the tab on the memory socket. Slide the new module **(1)** into the socket at an approximate 30° angle, and then press the module **(2)** down so that the latches lock it in place.

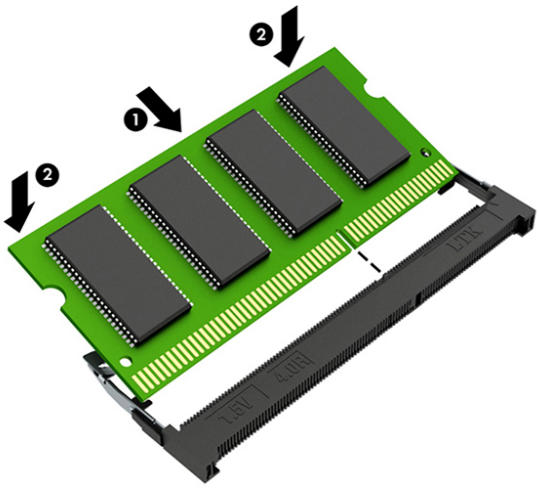

The computer automatically recognizes the additional memory when you turn on the computer.

WLAN module

To remove the WLAN module, use these procedures.

Table 4-15 WLAN module descriptions and part numbers

Description	Spare part number
Intel AX211 Wi-Fi 6E + Bluetooth 5.3	M53366-002
Intel BE200 Wi-Fi 7 + Bluetooth 5.4, vPro	N39882-002
Intel BE200 Wi-Fi 7 + Bluetooth 5.4, non-vPro	N39883-002

Before removing the WLAN module, follow these steps:

1. Prepare the computer for disassembly (Preparation for disassembly on page 27).
2. Remove the head unit from the stand (Head unit from stand on page 34).
3. Remove the back plate from the head unit (Back plate on page 36).
4. Remove the internal system cover (Internal system cover on page 45).

Remove the WLAN module:

1. Remove the Phillips screw **(1)** that secures the module to the computer.
2. Remove the cover **(2)** from the antenna connectors.
3. Carefully disconnect the antenna cables **(3)** from the module.

NOTE: The WLAN antenna cable labeled 1/MAIN connects to the WLAN module Main terminal. The WLAN antenna cable labeled 2/AUX connects to the WLAN module Aux terminal.

4. Pull the module **(4)** out of the socket.

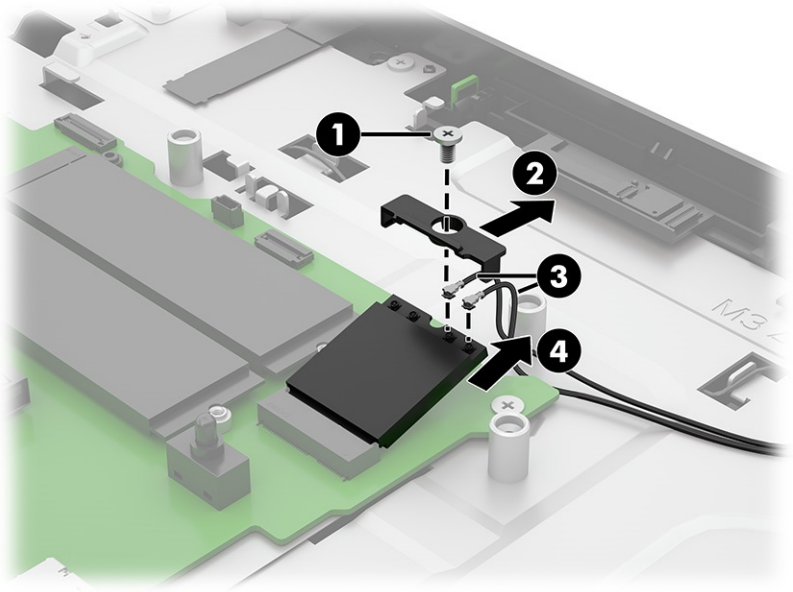

5. If the WLAN antenna is not connected to the terminal on the WLAN module, install a protective sleeve on the antenna connector, as shown in the following illustration.

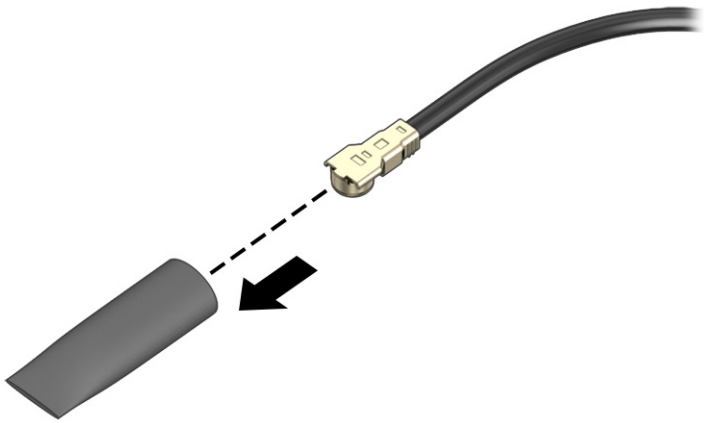

To install the WLAN module, reverse the removal procedure.

NOTE: WLAN modules are designed with a notch to prevent incorrect insertion.

Power button board

To remove the power button board, use these procedures.

Table 4-16 **Power button board description and part number**

Description	Spare part number
Power button board	P26263-001

Before removing the power button board, follow these steps:

1. Prepare the computer for disassembly (Preparation for disassembly on page 27).
2. Remove the head unit from the stand (Head unit from stand on page 34).
3. Remove the back plate from the head unit (Back plate on page 36).
4. Remove the internal system cover (Internal system cover on page 45).

Remove the power button board:

1. Disconnect the cable from the ZIF connector **(1)** on the power button board.
2. Remove the two Phillips screws **(2)** that secure the board to the computer.

3. Lift the back of the board **(3)** upward, and then pull the board **(4)** into the computer to remove it.

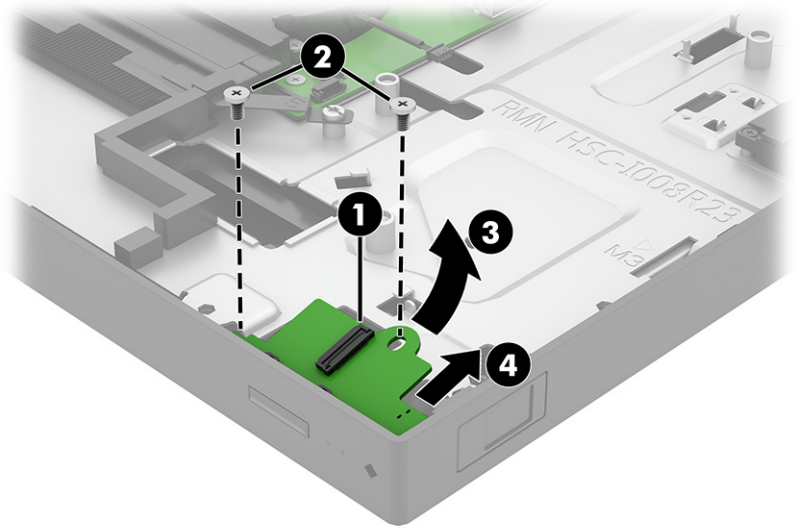

To install the power button board, reverse the removal procedure.

Microphone board

To remove the microphone board, use these procedures.

Table 4-17 **Microphone board description and part number**

Description	Spare part number
Microphone board	P27421-001

Before replacing the microphone board, follow these steps:

1. Prepare the computer for disassembly (Preparation for disassembly on page 27).
2. Remove the head unit from the stand (Head unit from stand on page 34).
3. Remove the back plate from the head unit (Back plate on page 36).
4. Remove the internal system cover (Internal system cover on page 45).

To remove the microphone board:

1. Disconnect the microphone board cable from the system board connector **(1)**.

2. Pull the board **(2)** off the inside of the computer to remove it. The board is secured with adhesive.

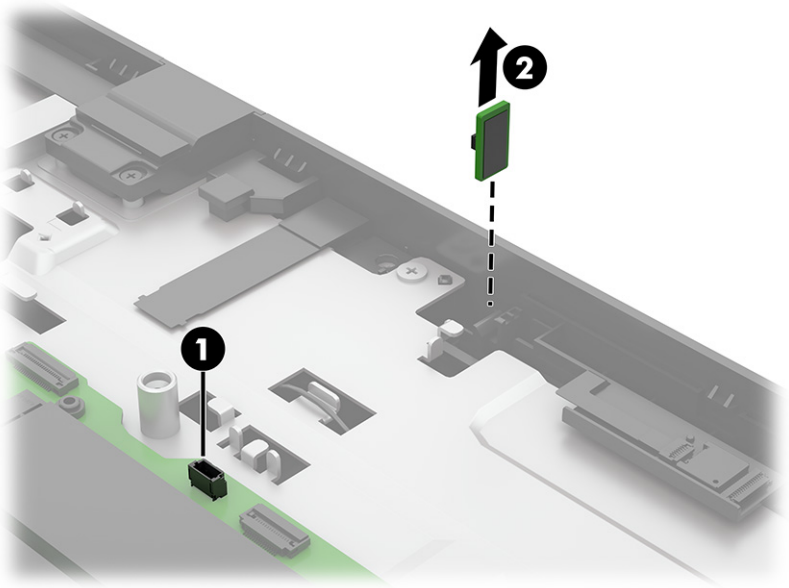

To install the microphone board, reverse the removal procedure.

Touch board

To remove the touch board, use these procedures.

Before removing the touch board, follow these steps:

1. Prepare the computer for disassembly (Preparation for disassembly on page 27).
2. Remove the head unit from the stand (Head unit from stand on page 34).
3. Remove the back plate from the head unit (Back plate on page 36).
4. Remove the internal system cover (Internal system cover on page 45).

Remove the touch board:

1. Remove the protective cover from the touch board.
2. Remove the two Phillips screws **(1)** from the touch board.
3. Disconnect the two cables **(2)** from the ZIF connectors on the board.

4. Remove the board **(3)** from the computer.

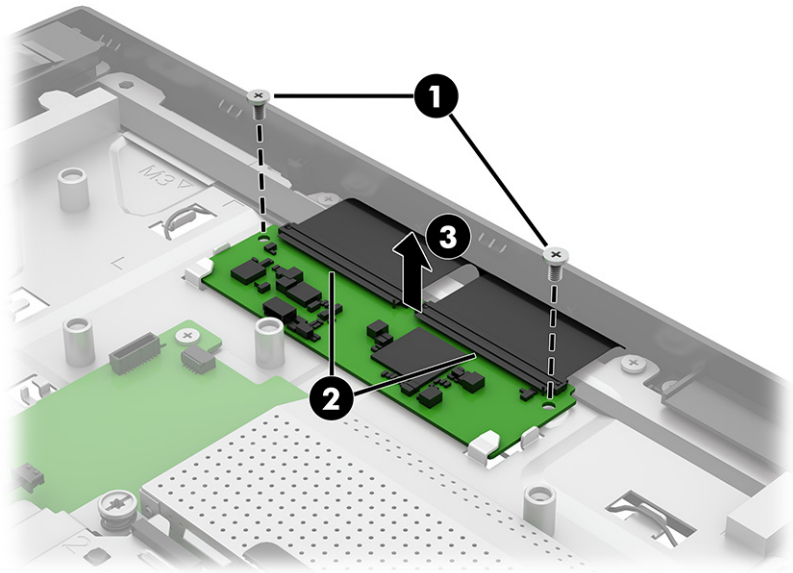

To install the touch board, reverse the removal procedure.

Backlight board

To remove the backlight board, use these procedures.

Before removing the backlight board, follow these steps:

1. Prepare the computer for disassembly (Preparation for disassembly on page 27).
2. Remove the head unit from the stand (Head unit from stand on page 34).
3. Remove the back plate from the head unit (Back plate on page 36).
4. Remove the internal system cover (Internal system cover on page 45).

Remove the backlight board:

1. Disconnect the two cables from the connectors **(1)** on the board.
2. Remove the two Phillips screws **(2)** from the backlight board.

3. Remove the board **(3)** from the computer.

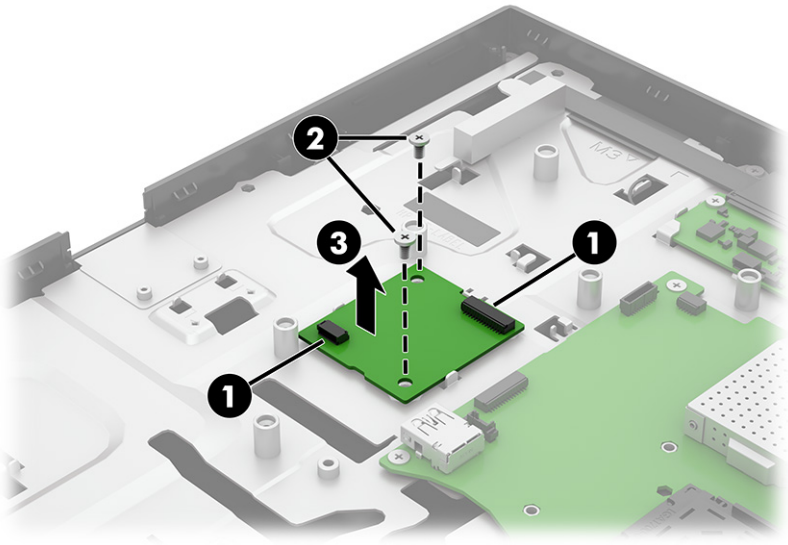

To install the backlight board, reverse the removal procedure.

Camera

To remove the camera module, use these procedures.

Table 4-18 **Camera description and part number**

Description	Spare part number
Camera	P27419-001

Before removing the camera module, follow these steps:

1. Prepare the computer for disassembly (Preparation for disassembly on page 27).
2. Remove the head unit from the stand (Head unit from stand on page 34).
3. Remove the back plate from the head unit (Back plate on page 36).
4. Remove the internal system cover (Internal system cover on page 45).
5. Remove the expansion slot cover from the slot above the camera module (Expansion slot cover on page 37).

Remove the camera module:

1. Lift the protective cover **(1)** from the camera module.
2. Disconnect the cable from the ZIF connector **(2)** on the system board.
3. Remove the two Phillips screws **(3)** that secure the camera.

4. Lift the camera **(4)** out of the computer.

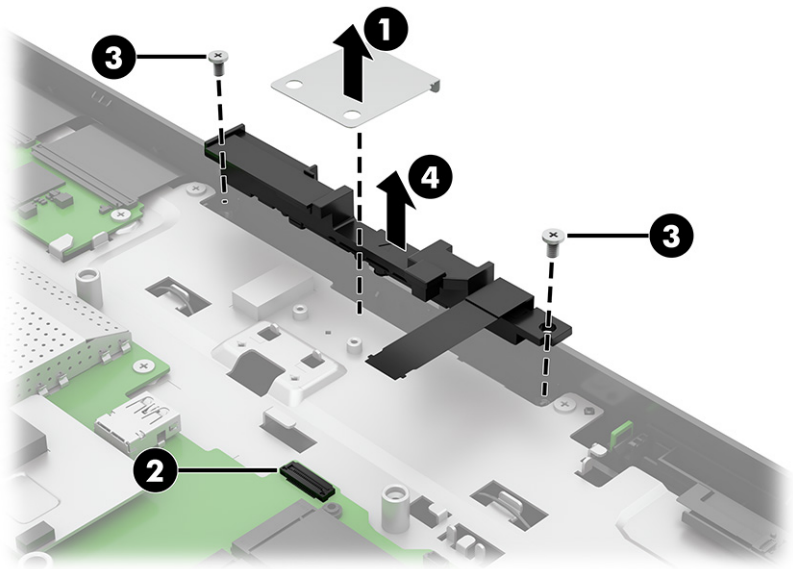

To install the camera module, reverse the removal procedure.

Speakers

To remove the speakers, use these procedures.

Table 4-19 **Speakers description and part number**

Description	Spare part number
Speakers	P26265-001

Before removing the speakers, follow these steps:

1. Prepare the computer for disassembly (Preparation for disassembly on page 27).
2. Remove the head unit from the stand (Head unit from stand on page 34).
3. Remove the back plate from the head unit (Back plate on page 36).
4. Remove the internal system cover (Internal system cover on page 45).

Remove the speakers:

1. Disconnect the speaker cable from the system board connector **(1)**.
2. Remove the four Phillips screws **(2)** from the speakers.

3. Remove the speakers **(3)** from the computer.

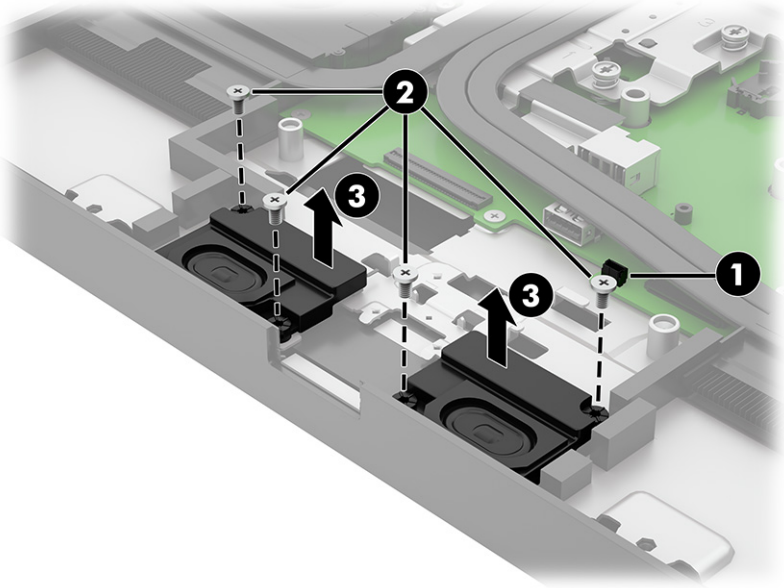

To install the speakers, reverse the removal procedures.

Fans

To remove the fans, use these procedures.

Table 4-20 **Fans descriptions and part numbers**

Description	Spare part number
Main	P26256-001
Processor	P26257-001

Before removing the fans, follow these steps:

1. Prepare the computer for disassembly (Preparation for disassembly on page 27).
2. Remove the head unit from the stand (Head unit from stand on page 34).
3. Remove the back plate from the head unit (Back plate on page 36).
4. Remove the internal system cover (Internal system cover on page 45).

Remove the fans:

1. Remove three Phillips screws **(1)** from each fan.
2. Disconnect the fan cables from the system board connectors **(2)**.

3. Remove the fans **(3)** from the computer.

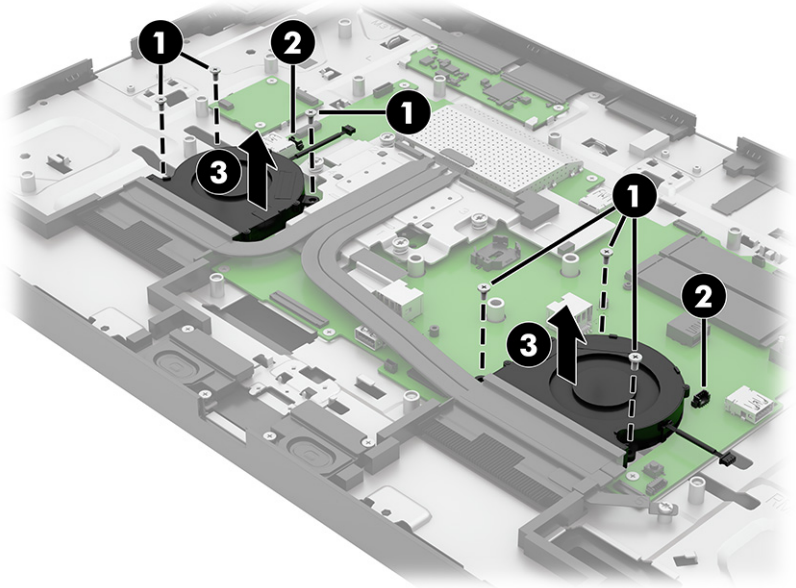

To install the fans, reverse the removal procedure.

Heat sink assembly

To remove the heat sink, use these procedures.

Table 4-21 **Heat sink description and part number**

Description	Spare part number
Heat sink	P26258-001

Before removing the heat sink, follow these steps:

1. Prepare the computer for disassembly (Preparation for disassembly on page 27).
2. Remove the head unit from the stand (Head unit from stand on page 34).
3. Remove the back plate from the head unit (Back plate on page 36).
4. Remove the internal system cover (Internal system cover on page 45).

Remove the heat sink assembly:

1. In the order indicated on the heat sink, loosen the five captive Torx screws **(1)** that secure the heat sink to the computer. A number next to each screw indicates the order to remove the screws.

2. Remove the heat sink **(2)** from the computer.

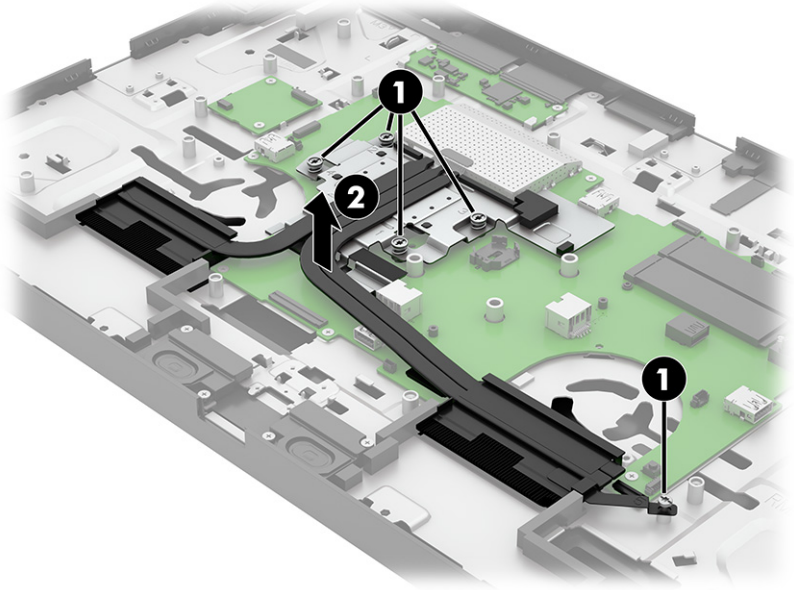

3. Each time the heat sink is removed, thoroughly clean and replace the gray thermal grease **(1)** and thermal pads **(2)** from the surface of the heat sink.

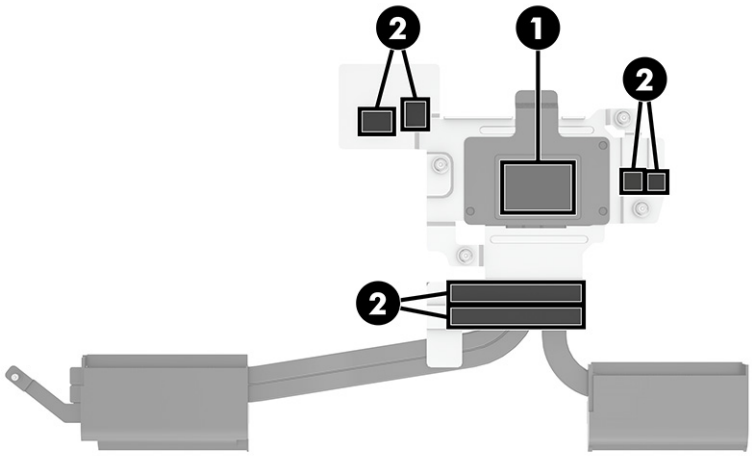

To install the heat sink, reverse the removal procedure.

Processor

To remove the processor, use these procedures.

Table 4-22 **Processor descriptions and part numbers**

Description	Spare part number
Intel Core i7-14700T	N92027-003
Intel Core i5-14500T	N92024-003

Table 4-22 Processor descriptions and part numbers (continued)

Description	Spare part number
Intel Core i3-14100T	N92022-003
Intel Celeron G6900TE	N56427-003

Before removing the processor, follow these steps:

1. Prepare the computer for disassembly (Preparation for disassembly on page 27).
2. Remove the head unit from the stand (Head unit from stand on page 34).
3. Remove the back plate from the head unit (Back plate on page 36).
4. Remove the internal system cover (Internal system cover on page 45).
5. Remove the heat sink (Heat sink assembly on page 58).

Remove the processor:

1. Pull the locking lever **(1)** away from the processor, and then rotate the lever **(2)** to its full open position.
2. Raise and rotate the microprocessor retainer **(3)** to its fully open position.
3. Carefully lift the processor **(4)** from the socket.

IMPORTANT: Do not handle the pins in the processor socket. These pins are fragile, and handling them could cause irreparable damage. If pins are damaged, you might have to replace the system board.

The heat sink must be installed within 24 hours of installing the processor to prevent damage to the processor's solder connections.

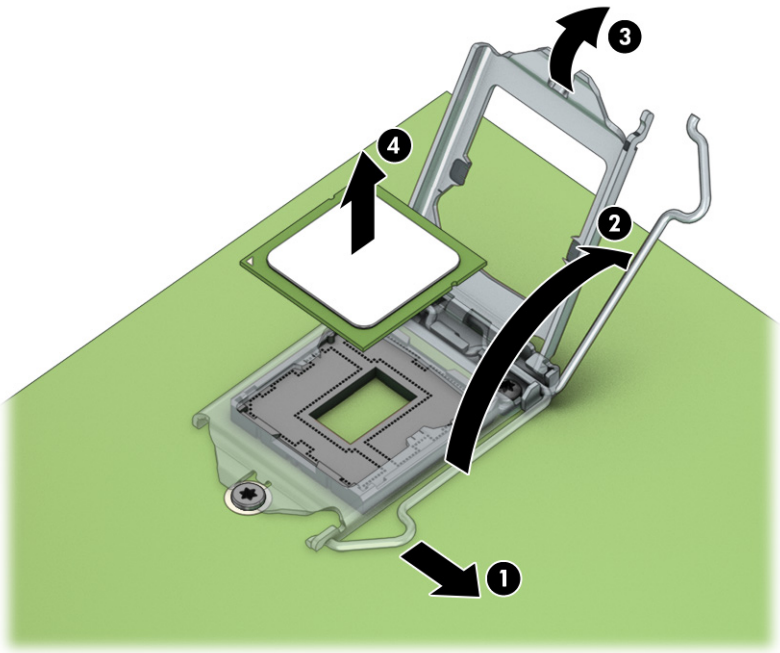

To replace the processor, reverse the removal procedures.

NOTE: After installing a new processor onto the system board, always update the system ROM to ensure that the latest version of the BIOS is being used on the computer.

Battery

To remove the battery, use these procedures. The battery that comes with the computer provides power to the real-time clock. When replacing the battery, use a battery equivalent to the battery originally installed in the computer. The computer comes with a 3 V lithium coin cell battery.

WARNING! The computer contains an internal lithium manganese dioxide battery. There is a risk of fire and burns if the battery is not handled properly. To reduce the risk of personal injury:

- Do *not* attempt to recharge the battery.
- Do *not* expose to temperatures higher than 60°C (149°F).
- Do *not* disassemble, crush, puncture, short external contacts, or dispose of in fire or water.

Replace the battery only with the HP spare part that is designated for this product.

IMPORTANT: Before replacing the battery, back up the computer CMOS settings. When the battery is removed or replaced, the CMOS settings are cleared.

Static electricity can damage the electronic components of the computer or optional equipment. Before beginning these procedures, be sure that you are discharged of static electricity by briefly touching a grounded metal object.

NOTE: You can extend the lifetime of the lithium battery by plugging the computer into an AC outlet. The lithium battery is used only when the computer is not connected to AC power.

HP encourages customers to recycle used electronic hardware, HP original print cartridges, and rechargeable batteries. For more information about recycling programs, go to http://www.hp.com/recycle.

Before removing the battery, follow these steps:

1. Prepare the computer for disassembly (Preparation for disassembly on page 27).
2. Remove the head unit from the stand (Head unit from stand on page 34).
3. Remove the back plate from the head unit (Back plate on page 36).
4. Remove the internal system cover (Internal system cover on page 45).

Remove the battery:

1. To release the battery from its holder, squeeze the metal clamp **(1)** that extends above one edge of the battery. When the battery pops up, lift it **(2)** out.



2. Slide the replacement battery into position, positive side up. The battery holder automatically secures the battery in the proper position.

System board

To remove the system board, use these procedures.

Table 4-23 System board descriptions and part numbers

Description	Spare part number
IoT operating system, landscape models	P22249-301
Windows operating system, landscape models	P22249-601
IoT operating system, portrait models	P22250-301
Windows operating system, portrait models	P22250-601

NOTE: All system board spare part kits include replacement thermal material.

Before removing the system board, follow these steps:

1. Prepare the computer for disassembly (Preparation for disassembly on page 27).
2. Remove the head unit from the stand (Head unit from stand on page 34).
3. Remove the back plate from the head unit (Back plate on page 36).
4. Remove the internal system cover (Internal system cover on page 45).
5. Remove the heat sink (Heat sink assembly on page 58).

When you replace the system board, be sure to remove the following components (as applicable) from the defective system board and install them on the replacement system board:

- Solid-state drive (Solid-state drive on page 43)
- Memory modules (Memory modules on page 46)

- Processor (Processor on page 46)
- WLAN module (WLAN module on page 49)

Remove the system board:

1. Disconnect the remaining cables from the system board, noting their locations for reinstallation.
2. Remove the seven Phillips screws that secure the system board to the computer.

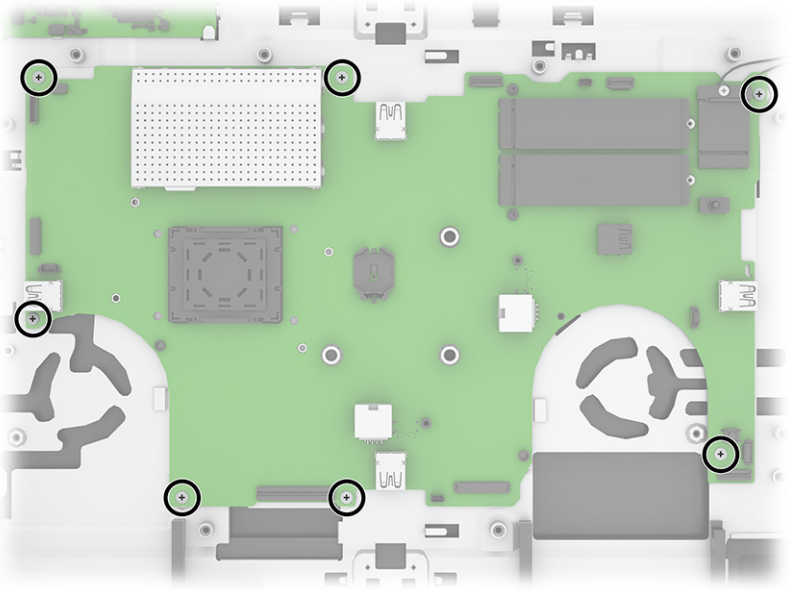

3. Lift the system board out of the computer.

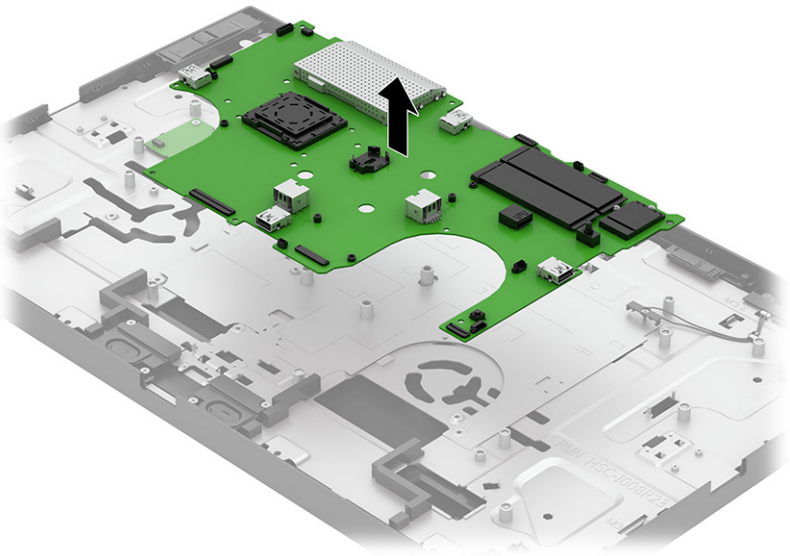

To install the system board, reverse the removal procedures.

NOTE: When replacing the system board, you must change the chassis serial number in the BIOS.

When replacing the system board, you must reprogram the SMBIOS information about the affected computer. Failure to reprogram the board will result in eventual failure, such as an activation failure (need to reactivate the system) or a system recovery failure.

Display panel

Replacing the display panel requires a clean room. To remove the display panel, use these procedures.

IMPORTANT: Replacing the display panel requires a clean room.

Table 4-24 Display panel descriptions and part numbers

Description	Spare part number
White, landscape orientation, without NFC	P32737-001
Black, portrait orientation, without NFC	P32738-001
White, portrait orientation, without NFC	P32739-001
Black, landscape orientation, without NFC	P26261-001
Black, landscape orientation, with NFC	P32740-001
White. landscape orientation, with NFC	P32741-001
Black, portrait orientation, with NFC	P32742-001
White, portrait orientation, with NFC	P32743-001

Before removing the display panel follow these steps:

1. Prepare the computer for disassembly (Preparation for disassembly on page 27).
2. Remove the head unit from the stand (Head unit from stand on page 34).
3. Remove the back plate from the head unit (Back plate on page 36).
4. Remove the expansion slot covers (Expansion slot cover on page 37) or devices plugged into the expansion slots.
5. Remove the fingerprint reader board (Fingerprint reader on page 40).
6. Remove the internal system cover (Internal system cover on page 45).
7. Remove the power button board (Power button board on page 51).
8. Remove the camera module (Camera on page 55).

Remove the display panel:

1. Disconnect the backlight cable from the system board connector **(1)**.
2. Disconnect the main display cable from the system board connector **(2)**.
3. Peel the wireless antennas **(3)** off the computer.

4. Remove the eight Phillips screws **(4)** from the display.

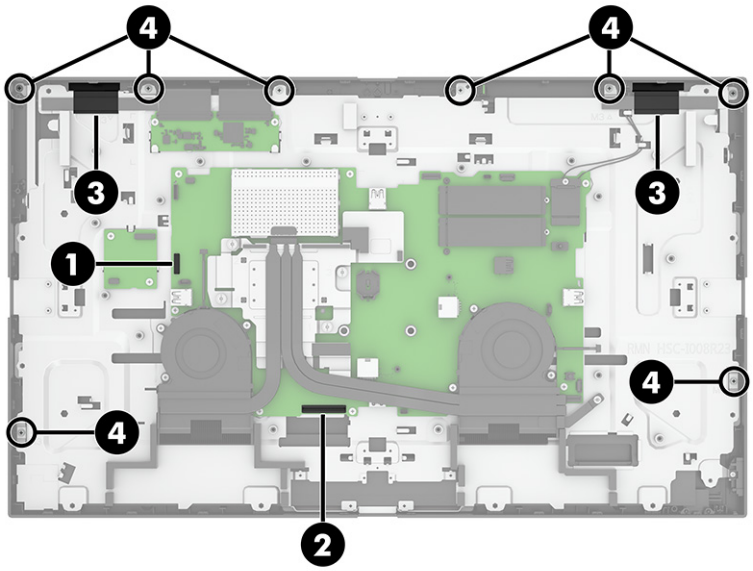

5. Using the handles **(1)**, lift the top of the computer frame **(2)** up, and then lift it off the display panel.

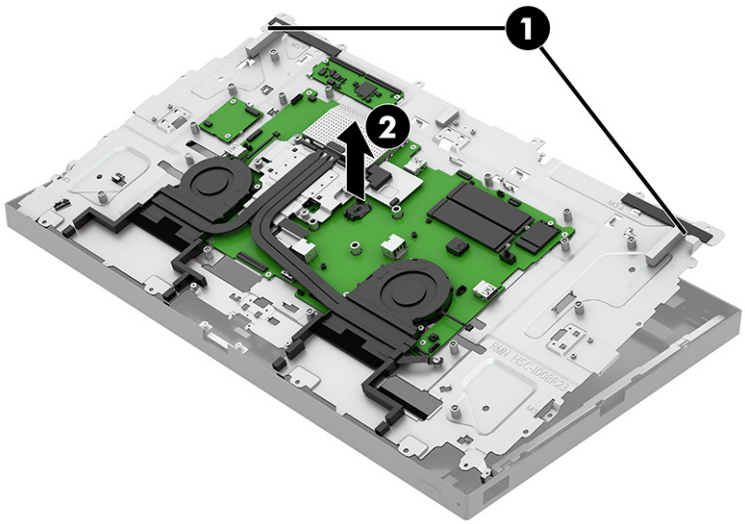

To install the display panel, reverse the removal procedure.

Antennas

To remove the antennas, use these procedures.

Table 4-25 Wireless antennas description and part number

Description	Spare part number
Wireless antennas	P26236-001

Before removing the antennas, follow these steps:

1. Prepare the computer for disassembly (Preparation for disassembly on page 27).
2. Remove the head unit from the stand (Head unit from stand on page 34).
3. Remove the back plate from the head unit (Back plate on page 36).
4. Remove the internal system cover (Internal system cover on page 45).
5. Remove the system board (System board on page 62).

Remove the antennas:

1. Peel the antennas **(1)** off the left and right sides of the frame.
2. Remove the seven Phillips screws **(2)** from the frame.

> **NOTE:** Screw holes are marked with “M3” on the frame.

3. Lift the frame **(3)** up to access the antenna cables underneath, and then remove antennas and cables **(4)**.

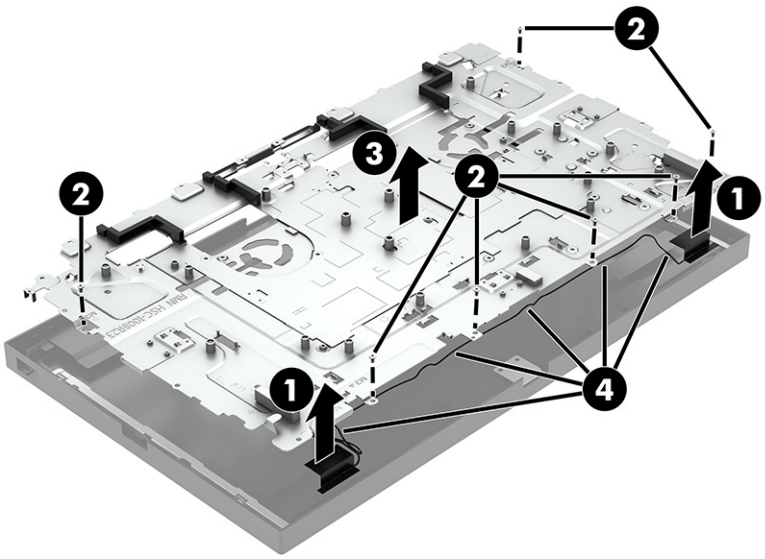

To replace the antennas, reverse the removal procedures.

5 Troubleshooting without diagnostics

Use these sections to identify and correct minor problems.

⚠ **CAUTION:** Misuse of the computer or failure to establish a safe and comfortable work environment can result in discomfort or serious injury. See the *Safety & Comfort Guide* at http://www.hp.com/ergo for more information about choosing a workspace and creating a safe and comfortable work environment. For more information, see the *Safety & Regulatory Information* guide.

Before you call for technical support

If you are having problems with the computer, try these solutions to isolate the exact problem before calling for technical support.

- Run the HP diagnostic tool.
- Run the hard drive self-test in Computer Setup.
- Check the power light on the front of the computer to see if it is blinking red. The blinking lights are error codes that will help you diagnose the problem.
- If you are working on a network, plug another computer with a different cable into the network connection. There might be a problem with the network plug or cable.
- If you recently added new hardware, remove the hardware and see if the computer functions properly.
- If you recently installed new software, uninstall the software and see if the computer functions properly.
- Boot the computer to the Safe Mode to see if it will boot without all of the drivers loaded. When booting the operating system, use “Last Known Configuration.”
- See the comprehensive online technical support at http://www.hp.com/support.

Access HP Business Solutions at https://www.hp.com/us-en/solutions/business-solutions.html for the latest online support information, software and drivers, proactive notification, and worldwide community of peers and HP experts.

If it becomes necessary to call for technical assistance, be prepared to do the following tasks to ensure that your service call is handled properly:

- Be in front of your computer when you call.
- Before you call, write down the computer serial number and product ID number.
- Spend time troubleshooting the problem with the service technician.

- Restore the system from the Recovery Disc Set that you created or restore the system to its original factory condition in System Software Requirement Disks (SSRD).

IMPORTANT: Restoring the system will erase all data on the hard drive. Be sure to back up all data files before running the restore process.

NOTE: For sales information and warranty upgrades (Care Packs), call your local authorized service provider or dealer.

Helpful hints

If you encounter problems with the computer or software, see this list of general suggestions before taking further action.

- Check that the computer is plugged into a working electrical outlet.
- Check that the computer is turned on and the white power light is on.
- Check the power light on the front of the computer to see if it is blinking red. The blinking lights are error codes that help you diagnose the problem.
- Press and hold any key if the system beeps. Then the keyboard should be operating correctly.
- Check all cable connections for loose connections or incorrect connections.
- Wake the computer by pressing any key on the keyboard or pressing the power button. If the system remains in suspend mode, shut down the computer by pressing and holding the power button for at least four seconds, and then press the power button again to restart the computer. If the system does not shut down, unplug the power cord, wait a few seconds, and then plug it in again. The computer will restart if it is set to turn on automatically as soon as power is restored in Computer Setup.
- Be sure that all the needed device drivers have been installed. For example, if you are using a printer, you need a driver for that model printer.
- Remove all bootable media (such as a USB device) from the system before turning it on.
- If you have installed an operating system other than the factory-installed operating system, check to be sure that it is supported on the system.

NOTICE: When the computer is plugged into an AC power source, voltage is always being applied to the system board. You must disconnect the power cord from the power source before opening the computer to prevent system board or component damage. After you plug in the AC power cord, wait five seconds before you press the power button.

Solving general problems

You might be able to easily resolve the general problems described in this section. If a problem persists and you cannot resolve it yourself or if you feel uncomfortable about performing the operation, contact an authorized dealer or reseller.

CAUTION: When the computer is plugged into an AC power source, voltage is always being applied to the system board. To reduce the risk of personal injury from electrical shock, hot surfaces, or both, be sure to disconnect the power cord from the AC outlet and allow the internal system components to cool before touching.

Cannot access the Computer Setup (F10) Utility when booting the computer

Use this information to troubleshoot the computer.

Cause	Solution
The Computer Setup (F10) Utility is set to Fast Boot, causing the F10 access screen to display too briefly when booting the computer.	Before turning on the computer, press and hold f10. Turn on the computer and continue to hold F10 until the Computer Setup (F10) Utility is displayed. - or – Follow the Windows® instructions for rebooting the computer into the Computer Setup (F10) Utility.

Computer appears locked up and will not turn off when the power button is pressed

Use this information to troubleshoot the computer.

Cause	Solution
Software control of the power switch is not functional.	1. Press and hold the power button for at least 4 s until the computer turns off. 2. Disconnect the power cord from the electrical outlet.

Computer will not respond to keyboard or mouse

Use this information to troubleshoot the computer.

Cause	Solution
Computer is in Sleep state.	To resume from Sleep state, press the power button. IMPORTANT: When attempting to resume from Sleep state, do not hold down the power button for more than 4 s. Otherwise, the computer shuts down and you lose any unsaved data.
System has locked up.	Restart computer.
USB cables might not be seated properly.	Disconnect, and then reconnect USB cables to keyboard and mouse.

Computer date and time display is incorrect

Use this information to troubleshoot the computer.

Cause	Solution
RTC (real-time clock) battery might need to be replaced.	Reset the date and time under **Control Panel**. You can also use Computer Setup to update the RTC date and time. If the problem persists, replace the RTC battery. See the Removal and replacement procedures on page 27 section for instructions about installing a new battery, or contact an authorized dealer or reseller for RTC battery replacement. To access Control Panel in Windows, type `control panel` in the taskbar search box, and then select Control Panel.

There is no sound or sound volume is too low

Use this information to troubleshoot the computer.

Cause	Solution
System volume might be set low or muted.	1. Check the front panel to see if an amber light indicates the system has been muted. Tap the touch-sensitive button to toggle the mute on and off. 2. Check the Computer Setup settings to be sure that the internal system speaker is not muted. This setting does not affect the external speakers. 3. Be sure that the external speakers are properly connected and powered on and that the speakers' volume control is set correctly. 4. Use the system volume control available in the operating system to be sure that the speakers are not muted or to increase the volume.

Poor performance

Use this information to troubleshoot the computer.

Cause	Solution
Processor is too hot.	1. Be sure that airflow to the computer is not blocked. Leave a 10.2 cm (4 inch) clearance on all vented sides of the computer to permit the required airflow. 2. Be sure that fans are connected and working properly (some fans only operate when needed). 3. Be sure that the processor heat sink is installed properly.
Hard drive is full.	Transfer data from the hard drive to create more space on the hard drive.
Low on memory.	Add more memory.
Hard drive fragmented.	Defragment hard drive.
Program previously accessed did not release reserved memory back to the system.	Restart the computer.
Virus resident on the hard drive.	Run virus protection program.
Too many applications running.	1. Close unnecessary applications to free memory. 2. Add more memory. 3. Some applications run in the background and can be closed by right-clicking their corresponding icons in the task tray.
Some software applications, especially games, are stressful on the graphics subsystem.	1. Lower the display resolution for the current application or consult the documentation that came with the application for suggestions on how to improve performance by adjusting parameters in the application. 2. Add more memory. 3. Upgrade the graphics solution.
Cause unknown.	Restart the computer.

Computer turned off with four red blinks and two white blinks

Computer turned off automatically and the power light blinks red four times, and then white two times.

Cause	Solution
Processor thermal protection activated. A fan might be blocked or not turning, or the heat sink is not properly attached to the processor.	1. Be sure that the computer air vents are not blocked and the processor cooling fan is running. 2. Open the access panel, press the power button, and see if the processor fan (or other system fan) spins. If the fan does not spin, be sure that the fan cable is plugged into the system board header. 3. If a fan is plugged in and not spinning, replace it.

System does not turn on and the lights on the front of the computer are not blinking

Use this information to troubleshoot the computer.

Cause	Solution
System unable to power on.	Press and hold the power button for fewer than 4 s. If the hard drive light turns white: 1. If the computer has a voltage selector, check that the voltage selector located on the rear of the power supply is set to the appropriate voltage. The proper voltage setting depends on your region. 2. Remove the expansion cards one at a time until the 5V_aux light on the system board turns on. 3. Replace the system board. OR Press and hold the power button for less than 4 s. If the hard drive light does not turn white: 1. Check whether the unit is plugged into a working AC outlet. 2. Open the access panel and check that the power button cable is properly connected to the system board. 3. Check that the power supply cables are properly connected to the system board. 4. Check to see if the 5V_aux light on the system board is turned on. If it is turned on, replace the power button assembly. 5. If the 5V_aux light on the system board is off, replace the power supply. 6. Replace the system board.

Solving power problems

These tables provide common causes and solutions for power problems.

Power supply shuts down intermittently

Use this information to troubleshoot the computer.

Cause	Solution
If the computer has a voltage selector, the voltage selector switch on the rear of the computer chassis (select products only) is not switched to the correct line voltage (115 V or 230 V).	Select the proper AC voltage using the selector switch.
Power supply will not turn on because of internal power supply fault.	Replace the power supply.

Two red blinks then two beeps

Computer turned off automatically, power light blinks red two times followed by a two-second pause, and the computer beeps two times (beeps stop after fifth iteration but lights continue blinking).

Cause	Solution
Processor thermal protection activated. A fan might be blocked or not turning, or the heat sink is not properly attached to the processor.	1. Be sure that the computer air vents are not blocked and the processor cooling fan is running. 2. Open the access panel, press the power button, and see if the processor fan (or other system fan) spins. If the fan does not spin, be sure that the fan cable is plugged onto the system board header. 3. If the fan is plugged in and not spinning, replace it.

Four red blinks then four beeps

Power light blinks red four times followed by a two-second pause and the computer beeps four times (beeps stop after fifth iteration but lights continue blinking).

Cause	Solution
Power failure (power supply is overloaded).	1. If the computer has a voltage selector, check that the voltage selector, located on the rear of the power supply (select products only), is set to the appropriate voltage. Proper voltage setting depends on your region. 2. Open the access panel, and be sure that the power supply cable is seated into the connector on the system board. 3. Check whether a device is causing the problem by removing all attached devices (such as hard drives or optical drives and expansion cards). Turn on the system. If the system enters POST, then power off and replace one device at a time and repeat this procedure until failure occurs. Replace the device that is causing the failure. Continue adding devices one at a time to ensure all devices are functioning properly. 4. Replace the power supply. 5. Replace the system board.

Solving keyboard and mouse problems

If you encounter keyboard or mouse problems, see the documentation that came with the equipment and the common causes and solutions listed in these tables.

Keyboard commands and typing are not recognized by the computer

Use this information to troubleshoot the computer.

Cause	Solution
Keyboard connector is not properly connected.	Shut down the computer, reconnect the keyboard, and then restart the computer.
Program in use has stopped responding to commands.	Shut down your computer using the mouse, and then restart the computer.
Keyboard needs repairs.	See the Worldwide Limited Warranty for terms and conditions.
Computer is in the Sleep state.	Press the power button to resume from the Sleep state. **IMPORTANT:** When attempting to resume from the Sleep date, do not hold down the power button for more than 4 seconds. Otherwise, the computer will shut down, and you will lose any unsaved data.

Mouse does not respond to movement or is too slow

Use this information to troubleshoot the computer.

Cause	Solution
Mouse connector is not properly plugged into the back of the computer.	Shut down the computer using the keyboard. 1. Press the ctrl and esc keys at the same time, or press the Windows logo key, to display the **Start** menu. 2. Use the arrow keys to scroll to and select the power icon at the top right on the menu, and then press enter. 3. Use the arrow keys to select **Shut Down**, and then press enter. 4. After the shutdown is complete, plug the mouse connector into the back of the computer (or the keyboard) and restart.
Program in use has stopped responding to commands.	Shut down the computer using the keyboard, and then restart the computer.
Mouse might need repair.	See the Worldwide Limited Warranty for terms and conditions.
Computer is in the Sleep state.	Press the power button to resume from the Sleep state. **IMPORTANT:** When attempting to resume from the Sleep state, do not hold down the power button for more than 4 seconds. Otherwise, the computer will shut down, and you will lose any unsaved data.
If using a wireless mouse, you might need to resynchronize the mouse with the computer.	Follow the instructions that came with the mouse.

Solving hardware installation problems

You might need to reconfigure the computer when you add or remove hardware, such as an additional drive or expansion card.

If you install a plug and play device, Windows automatically recognizes the device and configures the computer. If you install a device that is not plug and play, you must reconfigure the computer after completing installation of the new hardware. In Windows, use the **Add Hardware Wizard**, and follow the instructions that appear on the screen.

To open the Add Hardware Wizard, open a command prompt and type .

⚠ **WARNING!** When the computer is plugged into an AC power source, voltage is always applied to the system board. To reduce the risk of personal injury from electrical shock, hot surfaces, or both, be sure to disconnect the power cord from the AC outlet and allow the internal system components to cool before touching.

A new device is not recognized as part of the system

Use this information to troubleshoot the computer.

Cause	Solution
Cables of new external device are loose or power cables are unplugged.	Be sure that all cables are properly and securely connected and that pins in the cable or connector are not bent down.
Power switch of new external device is not turned on.	Turn off the computer, turn on the external device, and then turn on the computer to integrate the device with the computer system.
When the system advised you of changes to the configuration, you did not accept them.	Reboot the computer and follow the instructions for accepting the changes.
A plug and play board might not automatically configure when added if the default configuration conflicts with other devices.	Use Windows Device Manager to clear the automatic settings for the board, and choose a basic configuration that does not cause a resource conflict. You can also use Computer Setup to reconfigure or disable devices to resolve the resource conflict. To access Device Manager in Windows, type `device manager` in the taskbar search box, and then select **Device Manager** from the list of applications.
USB ports on the computer are disabled in Computer Setup.	Run the Computer Setup utility and ensure that **Device available** is selected for appropriate USB ports under **Advanced** > **Port Options**.

Computer will not start

Use this information to troubleshoot the computer.

Cause	Solution
Incorrect memory modules were used in the upgrade, or memory modules were installed in the wrong location.	1. Review the documentation that came with the system to determine if you are using the correct memory modules and to verify the proper installation. **NOTE:** DIMM1 or XMM1 must always be installed. DIMM1 must be installed before DIMM3. 2. Observe the beeps and lights on the front of the computer. Beeps and blinking lights are codes for specific problems. 3. If you still cannot resolve the issue, contact Customer Support.

Three red blinks then two white blinks

Power light blinks red three times, and then white two times.

Cause	Solution
Memory is installed incorrectly or is bad.	**IMPORTANT:** To avoid damage to the DIMMs or the system board, you must unplug the computer power cord before attempting to reseat, install, or remove a DIMM module. 1. Reseat DIMMs. Turn on the system. 2. Replace DIMMs one at a time to isolate the faulty module. **NOTE:** DIMM1 or XMM1 must always be installed. DIMM1 must be installed before DIMM3. 3. Replace third-party memory with HP memory. 4. Replace the system board.

Solving network problems

Some common causes and solutions for network problems are listed in these tables. The guidelines do not discuss the process of debugging the network cabling.

Network driver does not detect network controller

Use this information to troubleshoot the computer.

Cause	Solution
Network controller is disabled.	1. Run Computer Setup and enable network controller. 2. Enable the network controller in the operating system using Device Manager. To access Device Manager in Windows, type `device manager` in the taskbar search box, and then select **Device Manager** from the list of applications.
Incorrect network driver.	Check the network controller documentation for the correct driver or obtain the latest driver from the manufacturer's website.

Network status link light never blinks

Use this information to troubleshoot the computer.

NOTE: The network status light is supposed to blink when there is network activity.

Cause	Solution
No active network is detected.	Check cabling and network equipment for proper connection.
Network controller is not set up properly.	Check for the device status within Windows, such as Device Manager for driver load and the Network Connections applet within Windows for link status. To access Device Manager in Windows, type `device manager` in the taskbar search box, and then select **Device Manager** from the list of applications.

Network controller is disabled.	1. Run Computer Setup and enable network controller. 2. Enable the network controller in the operating system using Device Manager. To access Device Manager in Windows, type `device manager` in the taskbar search box, and then select **Device Manager** from the list of applications.
Network driver is not properly loaded.	Reinstall network drivers.
System cannot autosense the network.	Disable autosensing capabilities, and force the system into the correct operating mode.

Diagnostics passes, but the computer does not communicate with the network

Use this information to troubleshoot the computer.

Cause	Solution
Network drivers are not loaded, or driver parameters do not match current configuration.	Be sure that the network drivers are loaded and that the driver parameters match the configuration of the network controller. Be sure that the correct network client and protocol are installed.
The network controller is not configured for this computer.	Select the **Network and Sharing Center** icon in the **Control Panel**, and configure the network controller. To access Control Panel in Windows, type `control panel` in the taskbar search box, and then select **Control Panel** from the list of applications.

System setup utility reports unprogrammed EEPROM

Use this information to troubleshoot the computer.

Cause	Solution
Unprogrammed EEPROM.	Contact an authorized service provider.

Solving memory problems

If you encounter memory problems, some common causes and solutions are listed in these tables.

IMPORTANT: Depending on the Management Engine (ME) settings, power can still be supplied to the DIMMs when the computer is turned off. To avoid damage to the DIMMs or the system board, you must unplug the computer power cord before attempting to reseat, install, or remove a memory module.

For those systems that support error correction code (ECC) memory, HP does not support mixing ECC and non-ECC memory. Otherwise, the computer will not boot the operating system.

NOTE: The memory count will be affected by configurations with the ME enabled. The ME uses 8 MB of system memory in single-channel mode or 16 MB of memory in dual-channel mode to download, decompress, and execute the ME firmware for Out-of-Band (OOB), third-party data storage, and other management functions.

System will not boot or does not function properly after installing additional memory modules

Use this information to troubleshoot the computer.

Cause	Solution
A memory module is not installed in the DIMM1 or XMM1 socket.	Verify that a memory module is installed in the DIMM1 or XMM1 socket on the system board. This socket must be populated with a memory module.
Memory module is not the correct type or speed grade for the system, or the new memory module is not seated properly.	Replace module with the correct industry-standard device for the computer. On some models, ECC and non-ECC memory modules cannot be mixed.

Out of memory error

Use this information to troubleshoot the computer.

Cause	Solution
You have run out of memory to run the application.	Check the application documentation to determine the memory requirements.

Memory count during POST is wrong

Use this information to troubleshoot the computer.

Cause	Solution
The memory modules might not be installed correctly.	Check that the memory modules have been installed correctly and that proper modules are used.
Integrated graphics might use system memory.	No action required.

Insufficient memory error during operation.

Use this information to troubleshoot the computer.

Cause	Solution
Too many Terminate and Stay Resident programs (TSRs) are installed.	Delete any TSRs that you do not need.
You have run out of memory for the application.	Check the memory requirements for the application or add more memory to the computer.

Five red blinks then five beeps

Power light blinks red five times followed by a two-second pause and the computer beeps five times (beeps stop after fifth iteration but lights continue blinking).

Cause	Solution
Memory is installed incorrectly or is bad.	1. Reseat DIMMs. Turn on the system. 2. Replace DIMMs one at a time to isolate the faulty module. 3. Replace third-party memory with HP memory. 4. Replace the system board.

Solving software problems

Most software problems occur as a result of these situations:

- The application was not installed or configured correctly.
- Insufficient memory is available to run the application.
- A conflict exists between applications.
- All the necessary device drivers might not have been installed.
- If you have installed an operating system other than the factory-installed operating system, it might not be supported on the system.

If you encounter software problems, see the applicable solutions listed in the following table.

Computer will not start up and the HP logo does not appear

Use this information to troubleshoot the computer.

Cause	Solution
ROM issue - POST error has occurred.	Observe the beeps and lights on the front of the computer. See the Worldwide Limited Warranty for terms and conditions.

“Illegal Operation has Occurred” error message is displayed

Use this information to troubleshoot the computer.

Cause	Solution
Software being used is not Microsoft-certified for your version of Windows.	Verify that the software is certified by Microsoft for your version of Windows (see program packaging for this information).
Configuration files are corrupt.	If possible, save all data, close all programs, and restart the computer.

6 Computer Setup (F10) Utility

This information provides details of the Computer Setup Utility.

- Change settings from the defaults or restore the settings to default values.
- View the system configuration, including settings for processor, graphics, memory, audio, storage, communications, and input devices.
- Modify the boot order of bootable devices such as hard drives or USB flash media devices.
- Enter the Asset Tag or property identification number assigned by the company to this computer.
- Enable the power-on password prompt during system restarts (warm boots) as well as during startup.
- Establish an administrator password that controls access to the Computer Setup (F10) Utility and the settings described in this section.
- Establish minimum requirements for valid passwords, including length and required types of characters.
- Secure integrated I/O functionality, including the serial, USB, or audio, or embedded NIC, so that they cannot be used until they are unsecured.
- Enable or disable different types of boot sources.
- Configure features such as Secure Boot, power management, virtualization support, and language and keyboard type used in Setup and POST.
- Replicate the system setup by saving system configuration information about a USB device and restoring it on one or more computers.
- Enable or disable DriveLock security or securely erase a hard drive.

Using Computer Setup (F10) Utilities

You can access Computer Setup only by turning the computer on or restarting the system.

NOTE: On Portrait units, Computer Setup screens display in Landscape mode.

To access the Computer Setup Utilities menu, complete these steps:

1. Turn on or restart the computer.
2. Repeatedly press f10 when the power button light turns white to access the utility.

   You can also press esc to see a menu that allows you to access different options available at startup, including the Computer Setup utility.

NOTE: If you have a system without a keyboard, such as a Zoom Room system, press the power button twice to open F10 Setup.

A choice of four headings appears in the Computer Setup Utilities menu: Main, Security, Advanced, and UEFI Drivers.

NOTE: If you do not press f10 at the appropriate time, you must restart the computer and again repeatedly press f10 when the power button light turns white to access the utility.

NOTE: Selecting UEFI Drivers restarts the computer into the third-party option ROM management application. You can access this application directly by pressing f3 during startup.

3. Use the arrow (left and right) keys to select the appropriate heading. Use the arrow (up and down) keys to select the option you want, and then press enter. To return to the Computer Setup Utilities menu, press esc.

4. To apply and save changes, select **Main** > **Save Changes and Exit**.

   - If you have made changes that you do not want applied, select **Ignore Changes and Exit**.
   - To restore settings from the Advanced and Main menus to original values, select **Apply Factory Defaults and Exit**.
   - To restore settings from the Advanced and Main menus to those previously saved by **Save Custom Defaults**, select **Apply Custom Defaults and Exit**. If no custom defaults have been saved, factory defaults are used.

NOTE: You cannot modify settings in the Security menu by selecting **Apply Defaults**. You reset those values by selecting **Restore Security Settings to Factory Defaults** at the bottom of the **Security** menu.

NOTE: Not all settings shown in the following sections are available for all models.

IMPORTANT: Do not turn computer power off while the BIOS is saving the Computer Setup (F10) changes because the settings could become corrupted. It is safe to turn off the computer only after exiting the F10 Setup screen.

Computer Setup: Main

This table provides information about the Computer Setup Main menu.

NOTE: Support for specific Computer Setup options can vary, depending on the hardware configuration.

Table 6-1 **Computer Setup: Main**

Option	Description
System Information	Lists all information in following list if **Advanced System Information** is selected. Lists smaller subset if **Basic System Information** is selected. • Product name • Memory size • Storage devices • Processor type • Processor cache size (L1/L2/L3) • Processor speed • Processor cores • MicroCode revision • Processor stepping • Memory speed • DIMM size (for each installed module) • System BIOS version • ME Firmware version (Intel only) • ME Firmware mode (Intel only) • Audio controller • Video BIOS version • Reference code revision • Super I/O firmware version • USB Type-C controller firmware version • Born on date • Serial number • SKU number • UUID (Universally Unique Identifier) • Asset tracking number • Feature byte • Build ID • Product family • System board ID • System board CT number • Integrated MAC Address

Table 6-1 Computer Setup: Main (continued)

Option	Description
System Diagnostics	If the hard drive has the HP Advanced Diagnostics installed, the application launches. If HP Advanced Diagnostics is not installed, a basic version that is built into the BIOS provides the capability to perform the following functions: • Memory Test • Hard Drive Check • Language
BIOS Event Log	Lets you view the BIOS event log, export it to a USB flash drive, or clear the log the next time the computer is rebooted. • View BIOS Event Log • Export to USB Key • Clear BIOS Event Log on Next Boot

Table 6-1 Computer Setup: Main (continued)

Option	Description
Update System BIOS	Lets you update the system BIOS from www.hp.com or another network server, from a removable USB drive, or from a file located on the hard drive. • Check [current selection] for BIOS Updates The string that appears here depends on the setting in **BIOS Update Preferences**. • Lock BIOS Version If this option is selected, the system is locked to the current BIOS version and, updates are not allowed. • Native OS Firmware Update Service If this option is selected, the system enables firmware updates from the Window Update service. • BIOS Rollback Policy ▪ Unrestricted Rollback to older BIOS—Lets you roll back to any previous version of BIOS. ▪ Restricted Rollback to older BIOS—If selected, **Minimum BIOS Version** becomes active, which lets you manually enter the minimum BIOS version that you can roll back to. • Allow BIOS Updates Using a Network • BIOS Update Preferences ▪ Check for Update on Next Reboot—Default is disabled. ▪ BIOS Source—Lets you select either HP.com or a custom URL. If **Custom URL** is selected, **Edit Custom URL** becomes active. HP recommends using a custom URL only for a managed IT environment. ▪ Automatic BIOS Update Setting Allows configuration of a periodic check for updates: NOTE: If Microsoft Windows® BitLocker Drive Encryption (BDE) is enabled, it must be temporarily suspended before the BIOS is flashed. – Do not update – Checking for updates and prompt the user to accept or reject the update at that time – Checking for updates and install all new versions – Checking for updates and install only new versions marked important ▪ BIOS Update Frequency – Daily – Weekly – Monthly (default) • Network Configuration Settings • Update System and Supported Device Firmware Using Local Media Lets you access files on either USB storage or the hard drive.
Change date and time	Lets you update system date and time.

Table 6-1 Computer Setup: Main (continued)

Option	Description
System IDs	Let you set the following values: • Asset Tracking Number • Ownership Tag
Replicated Setup	**Back up current settings to USB device** Saves system configuration to a formatted USB flash media device. **Restore current settings from USB device** Restores system configuration from a USB flash media device.
Save Custom Defaults	Saves the current system configuration settings as the custom default set.
Apply Custom Defaults and Exit	Applies the custom default settings to the computer after rebooting. Does not apply to options in the **Security** menu.
Apply Factory Defaults and Exit	Restores the factory system configuration settings to the computer after rebooting. Does not apply to options in the **Security** menu.
Ignore Changes and Exit	Exits Computer Setup without applying or saving any changes.
Save Changes and Exit	Saves changes to current system configuration, exits Computer Setup, and reboots.
Suppress POST errors	Select to turn off any errors generated by Power On Self Test (POST) during boot up.

Computer Setup: Security

This table provides information about the Computer Setup Security menu.

NOTE: Support for specific Computer Setup options can vary, depending on the hardware configuration.

Table 6-2 Computer Setup: Security

Option	Description
Create BIOS Administrator Password	Lets you set and enable a BIOS administrator password, which controls access to the following features: • Setup Menu (F10) • Third-Party Option ROM Management (F3) • Update system ROM • WMI commands that change system settings • BIOS Configuration Utility (BCU) • Alternative power-on password NOTE: Creating a BIOS user disables the Fast Boot option. NOTE: If the password is set, you must change Computer Setup options, update the BIOS, and make changes to certain plug and play settings under Windows.

Table 6-2 Computer Setup: Security (continued)

Option	Description
Change BIOS Administrator Password (This selection is active only if a BIOS administrator password is set.)	Lets you change the BIOS administrator password. You must know the current password to be able to change it.
Create POST Power-On Password	Lets you set and enable a power-on password. The power-on password prompt appears after a power cycle or reboot. If the user does not enter the correct power-on password, the unit will not boot.
Change POST Power-On Password (This selection is active only if a BIOS administrator password is set.)	Lets you change the POST power-on password. You must know the current password to be able to change it.
Password Policies	Let you set the guidelines for a valid password. Options include: • Password minimum length • Requires at least one symbol • Requires at least one number • Requires at least one uppercase character • Requires at least one lowercase character • Allow spaces • Clear Password Jumper Select **Honor** to allow or **Ignore** to not allow the absence of the password jumper to clear the passwords at boot up. Default is **Honor**.
Administrator Authentication Policies	Lets you configure the computer to prompt for administrator authentication at the following: • F9 boot menu • F11 system recovery • F12 network boot • Capsule update • Power-on authentication

Table 6-2 Computer Setup: Security (continued)

Option	Description
Security Configuration	**TPM Embedded Security** • **TPM Specification Version** Displays the current Trusted Platform Module (TPM) version. • **TPM Device** Lets you set the TPM as available or hidden. • **TPM State** Select to enable the TPM. • **ClearTPM** Select to reset the TPM to an unowned state. After the TPM is cleared, it is also turned off. To temporarily suspend TPM operations, turn the TPM off instead of clearing it. IMPORTANT: Clearing the TPM resets it to factory defaults and turns it off. You will lose all created keys and data protected by those keys. • **TPM Activation Policy** ▪ F1 to boot ▪ Allow user to reject ▪ No prompts **BIOS SureStart** • Verify Boot Block on every boot—Select to enable HP SureStart. • BIOS Data Recovery Policy—Select Automatic or Manual to determine data recovery process. Manual recovery is intended only for situations when you want forensic analysis before HP SureStart recovery. When this policy is set to manual, HP SureStart will not correct any issues that are found until the local user enters the manual recovery key sequence. This can result in a computer that cannot boot until the manual recovery key sequence is entered. • Dynamic Runtime Scanning of Boot Block—Verifies the integrity of the BIOS boot block region several times each hour while the computer is running. Default is Enabled. • Sure Start BIOS Settings Protection—When enabled, HP Sure Start locks all critical BIOS settings and provides enhanced protection for these settings using nonvolatile (flash) memory. NOTE: An administrator password must be set to activate this setting. • Enhanced HP Firmware Runtime Intrusion Prevention and Detection—Enables monitoring of HP system firmware executing out of main memory while the operating system is running. Any anomalies detected in HP system firmware that is active while the operating system is running will result in a Sure Start security event being generated.

Table 6-2 Computer Setup: Security (continued)

Option	Description

	• Sure Start Security Event Policy—Controls HP Sure Start behavior upon identifying a critical security event (any modification to HP firmware) while the operating system is running.
	  ▪ Log Event Only—HP Sure Start will log all critical security events in the HP Sure Start audio log within the HP Sure Start nonvolatile (flash) memory.
	  ▪ Log Event and notify user—In addition to logging all critical security events, HP Sure Start will notify the user within the operating system that a critical event has occurred.
	  ▪ Log Event and power off system—In addition to logging all critical security events, HP Sure Start turns of the computer upon detecting a HP Sure Start Security Event. Because of the potential for data loss, HP recommends this setting only in situations where security integrity of the system is a higher priority than the risk of potential data loss.
	Secure Boot Configuration
	Access to these settings requires Sure Start Secure Boot Keys Protect to be disabled.
	• Secure Boot—Select to enable.
	• Secure Boot Key Management—Lets you import custom keys, clear keys, reset keys to factory defaults, and enable an MS UEFI CA key. Clearing keys will disable secure boot. Disabling MS UEFI CA keys alters the Secure Boot key list to further restrict the allowed software components. Set this option to disable to support Device Guard.
	• Ready BIOS for Device Guard Use—Requires BIOS Administrator credentials and Secure Boot to be enabled.
	Secure Platform Management (SPM)
	SPM uses certificates rather than password to authorize operations.
	• SPM—Lets you provision or unprovision SPM.
	• HP Sure Run—Lets activate or deactivate HP Sure Run.
	• HP Sure Admin—Lets you enable or disable Enhanced BIOS Authentication Mode (EBAM) or clear EBAM local access keys.
	Physical Presence Interface
	Enable this setting to notify the user upon system power up when changes are made to system security policy. The user must manually agree to confirm the changes.
	Smart Cover
	• Cover Removal Sensor (Disabled/Notify user/Administrator password)
	Lets you disable the cover sensor or configure what action is taken if the computer cover is removed. Default is Disabled.
	NOTE: **Notify user** alerts the user with a POST error on the first boot after the sensor detects removal of the cover. If the password is set, **Administrator Password** requires that the password be entered to boot the computer if the sensor detects that the cover has been removed.
	Trusted Execution Technology (TXT)
	Select to enable TXT.

Table 6-2 Computer Setup: Security (continued)

Option	Description
Utilities	**Intel Software Guard Extensions (SGX)** Intel SGX is a set of processor code instructions from that allows user-level code to allocate private regions of memory, that unlike normal process memory is also protected from processes running at higher privilege levels. • Software control • Disable • Enable **Hard Drive Utilities** • **Save/Restore GPT of System Hard Drive** Enabling this feature saves the GUID Partition Table (GPT) of the system hard drive. If the GPT is subsequently changed, the user is prompted to choose whether to restore GPT. • **Boot Sector (MBR/GPT) Recovery Policy** Lets you set to local user control or to recover in event of corruption. • **DriveLock/Automatic DriveLock** Allows you to assign or modify a master or user password for hard drives. When this feature is enabled, the user is prompted to provide one of the DriveLock passwords during POST. If neither is successfully entered, the hard drive remains inaccessible until one of the passwords is successfully provided during a subsequent cold-boot sequence. NOTE: This selection appears only when at least one drive that supports the DriveLock feature is attached to the system. IMPORTANT: Be aware that these settings take place immediately. It is not necessary to save. IMPORTANT: Be sure to document the DriveLock password. Losing a DriveLock password will render a drive permanently locked. After you select a drive, the following options are available: ▪ **Set DriveLock Master Password**. Sets the drive's master password but does not enable DriveLock. ▪ **Enable DriveLock**. Sets the drive's user password and enables DriveLock. • **Secure Erase** Lets you select a hard drive to completely erase. After you erase a hard drive with a program that uses Secure Erase firmware commands, no file recovery program, partition recovery program, or other data recovery method can extract data from the drive. • **Allow OPAL Hard Drive SID Authentication** Default is disabled.
System Management Command	Allows authorized personnel to reset security settings during a service event. Default is enabled.
Restore Security Settings to Default	This action resets security devices, clears BIOS passwords (not including DriveLock), and restores settings in the **Security menu** to factory defaults.

Computer Setup: Advanced

This table provides information about the Computer Setup Advanced menu.

NOTE: Support for specific Computer Setup options can vary, depending on the hardware configuration.

Table 6-3 Computer Setup: Advanced (for advanced users)

Option	Heading
Display Language	Lets you select the language of the menus in F10 Setup and the keyboard layout.
Scheduled Power-On	This feature wakes the system when it is off at a specified date and time.

Boot Options	Select the devices that the computer can boot from, as well as other options, including:
	• Startup Delay (sec). Enabling this feature adds a user-specified delay to the POST process. One purpose for the delay is to provide additional time to activate hotkeys such as esc for the Startup Menu or f10 for Computer Setup.
	• Fast Boot—Default is enabled.
	• USB Storage Boot—Default is enabled.
	• Network (PXE) Boot—Default is enabled.
	• After Power Loss—Default is Power Off.
	  ▪ Power off—Causes the computer to remain off when power is restored.
	  ▪ Power on—Causes the computer to turn on automatically as soon as power is restored.
	  ▪ Previous state—Causes the computer to turn on automatically as soon as power is restored, if it was on when power was lost.
	NOTE: If the system is configured to Power On from Keyboard Ports (see Power Management Options), then this setting is forced to Power On.
	• Prompt on Memory Size Change. Default is enabled.
	• Prompt on Fixed Storage Change. Default is disabled.
	• Audio Alerts During Boot. Default is enabled. When disabled, most audible beeps from errors, warnings, and password prompts during boot up are suppressed.
	• NumLock on at boot. Default is disabled.
	• UEFI Boot Order.
	Default is enabled. Specify the order in which UEFI boot sources (such as a internal hard drive, USB hard drive, USB optical drive, or internal optical drive) are checked for a bootable operating system image.
	UEFI boot sources always have precedence over legacy boot sources.
	NOTE: To drag a device to a preferred place, press enter.
	Shortcut to Temporarily Override Boot Order
	To boot **one time** from a device other than the default device specified in Boot Order, restart the computer and press esc (to access the Startup menu) and then f9 (Boot Menu), or only f9 (skipping the Startup menu) when the power button light turns white. After POST is completed, a list of bootable devices is displayed. Use the arrow keys to select the preferred bootable device and press enter. The computer then boots from the selected non-default device for this one time.

Table 6-3 Computer Setup: Advanced (for advanced users) (continued)

Option	Heading
HP Sure Recover	**HP Sure Recover** If enabled, system firmware honors local and remote requests to reinstall the operating system. If disabled, all reinstall requests are ignored. Default is enabled. **Recover from Network** If enabled, system firmware gets the recovery agent from the network. If disabled, system firmware gets the recovery agent from the local drive. Default is enabled. **Recover after Boot Failure** If enabled and no bootable UEFI operating system is found, system firmware launches HP Sure Recover. Default is disabled. **Prompt before Boot Failure Recovery** If enabled and no bootable UEFI operating system is found, the user is notified of the boot failure and asked to choose whether to start HP Sure Recover. Default is enabled.

Table 6-3 Computer Setup: Advanced (for advanced users) (continued)

Option	Heading
System Options	**Configure storage controller for RAID** Default is disabled. **Configure storage controller for Intel Optane** Enables the Intel® Optane™ memory module. Default is disabled. **Turbo-boost** Default is enabled. **Hyperthreading** Lets you control processor capability. Default is enabled. **Multi-processor** Use this option to disable multi-processor support under the operating system. Default is enabled. **Virtualization Technology (VTx)** (Intel only) Controls the virtualization features of the processor. Changing this setting requires turning the computer off and then back on. Default is enabled. **Virtualization Technology for Directed I/O (VTd)** (Intel only) Controls virtualization DMA remapping features of the chipset. Changing this setting requires turning the computer off and then back on. Default is enabled. **Preboot DMA protection** Default is disabled. **M.2 SSD** Lets you disable the M.2 solid-state drive slot. Default is enabled. **M.2 WLAN/BT** Lets you disable the wireless module slot. Default is enabled. **Power Button Override** (disable/4 sec/15 sec/30 sec) Lets you disable or enable and select the number of seconds you have to hold down the power button for it to force the system to turn off. Default is 4 sec. **USB Type-C Connector System Software Interface (UCSI)** Default is enabled. **HP Application Driver** Default is enabled.

Table 6-3 Computer Setup: Advanced (for advanced users) (continued)

Option	Heading
Built-In Device Options	**Embedded LAN Controller** Select to show the device in the operating system. Default is enabled. **Wake On LAN** Lets you either disable the Wake On LAN feature or configure where the computer boots, including the network or hard drive. Default is Boot to Network. **Video memory size** Use this option to manage graphics memory allocation. The value you choose is allocated permanently to graphics and is unavailable to the operating system. **Touch Device** Select to show the device in the operating system. Default is enabled. **NFC** Select to show the device in the operating system. Default is enabled. **Audio Device** Select to show the device in the operating system. Default is enabled. **Microphone** Clear to disable the integrated microphone. This does not affect devices plugged into audio jacks. Default is enabled. **Internal Speakers** (does not affect external speakers) Clear to disable the chassis speaker or speakers. This function is applicable to normal audio playback in the operating system and does not affect the error or warning beeps during POST. Default is enabled. **LAN/WLAN auto switching** Select to enable auto switching between a wired and wireless connection. Default is disabled. **Wake on WLAN** Select to enable wake on WLAN. Default is disabled.

Table 6-3 Computer Setup: Advanced (for advanced users) (continued)

Option	Heading
Port Options	**Left USB ports** Lets you disable the ports. Default is enabled. **Right USB ports** Lets you disable the ports. Default is enabled. **Top USB ports** Lets you disable the ports. Default is enabled. **Bottom USB ports** Lets you disable the ports. Default is enabled. **Always Power the Stand Ports** When enabled, power to the stand and base remains on to support wake events and USB charging. Requires S5 Maximum Power Savings to be off. Default is disabled. **Rear USB Ports** Lets you disable the ports. Default is enabled.
Power Management Options	**Runtime Power Management** (enable/disable) Allows certain operating systems to reduce processor voltage and frequency when the current software load does not require the full capabilities of the processor. Default is enabled. **Extended Idle Power States** (enable/disable) Allows certain operating systems to decrease the processors power consumption when the processor is idle. Default is enabled. **S5 Maximum Power Savings** (enable/disable) Enabling this feature reduces the power of the system as much as possible in the S5 state. Power is removed from the wake up circuitry, the expansion slots, and any management features while in S5. Default is disabled. **PCI Express Power Management** (enable/disable) Enabling this option permits the PCI Express links to use Active Power State Management (ASPM) to enter lower power states while not in use. Default is enabled. **Unique Sleep State Blink Rates** (enable/disable) This feature is designed to provide a visual indication of what Sleep state the system is in. Each Sleep state has a unique blink pattern. Default is disabled. NOTE: A normal shutdown goes to the S4 state for Windows 8 or later. S0 (On) = solid white light. S3 (Stand By) = 3 blinks at 1 Hz (50% duty cycle) followed by a pause of 2 seconds (white light), repeated cycles of 3 blinks and a pause. S4 (Hibernation) = 4 blinks at 1 Hz (50% duty cycle) followed by a pause of 2 seconds (white light), repeated cycles of 4 blinks and a pause. S5 (Soft Off) = Light is off.

Table 6-3 Computer Setup: Advanced (for advanced users) (continued)

Option	Heading
Remote Management Options	**Active Management (AMT)** (Intel only) (enable/disable). Default is enabled. Allows you to discover, repair, and protect networked computing devices. **USB Key Provisioning Support** (enable/disable) Default is disabled. **USB Redirection Support** (enable/disable). Default is enabled. USB redirection allows USB devices plugged into a client computer to be transparently redirected to the guest operating system. **Unconfigure AMT on next boot** (Do Not Apply/Apply). Default is Do Not Apply. **SOL Terminal Emulation Mode** (ANSI / VT100). Default is ANSI. SOL (serial-over-LAN) terminal emulation mode is only activated during remote AMT (Active Management Technology) redirection operations. The emulation options allow administrators to select which mode works best with their console. **Show Unconfigure ME Confirmation Prompt** (enable/disable). Default is enabled. **Verbose Boot Messages** (enable/disable). Default is enabled. Verbose boot shows additional logging information during startup, which is mainly for debugging if something goes wrong during bootup. **Watchdog Timer** (enable/disable). Default is enabled. Allows you to set amount of time for a operating system and BIOS watchdog alert to be sent if the timers are not deactivated. BIOS watchdog is deactivated by BIOS and would indicate that a halt occurred during execution if the alert is sent to the management console. An operating system alert is deactivated by the operating system image and would indicate that a hang occurred during its initialization. • OS Watchdog Timer (min.) – (5/10/15/20/25). Default is 5 min. • BIOS Watchdog Timer (min.) – (5/10/15/20/25). Default is 5 min. **CIRA Timeout (min.)** (1/2/3/4/Never) CIRA is Customer Initiated Remote Assistance, an Intel service to help users employing Active Management Technology (AMT).
Electronic labels	Displays system labels.
Remote HP PC Hardware Diagnostics	**Settings** • Diagnostics Download URL • Diagnostics Logs Upload URL • Scheduled Execution • Frequency • Execute On Next Boot • Last Execution Result **Execute Remote HP PC Hardware Diagnostics** Immediate execution of Remote HP PC Hardware based on the configurations in Settings. Be sure to note that unsaved BIOS settings are lost.

7 POST error messages

This section lists the error codes, error messages, and the various indicator light and audible sequences that you might encounter during Power-On Self-Test (POST) or computer restart, the probable source of the problem, and steps you can take to resolve the error condition.

POST Message Disabled suppresses most system messages during POST, such as memory count and non-error text messages. If a POST error occurs, the screen will display the error message. To manually switch to the POST Messages Enabled mode during POST, press any key except f10, f11, or f12. The default mode is POST Message Disabled.

The POST mode selection determines the speed at which the computer loads the operating system and the extent to which it is tested.

Quick Boot is a fast startup process that does not run all of the system level tests, such as the memory test. Full Boot runs all of the ROM-based system tests and takes longer to complete.

You can enable Full Boot to run every 1 to 30 days on a regularly scheduled basis. To establish the schedule, reconfigure the computer to the Full Boot Every x Days mode, using Computer Setup.

NOTE: For more information about Computer Setup, see Computer Setup (F10) Utility on page 79.

POST numeric codes and text messages

This section identifies those POST errors that have numeric codes associated with them. The section also includes some text messages that you might encounter during POST.

NOTE: The computer beeps once after a POST text message is displayed on the screen.

Table 7-1 POST numeric codes and text messages

Control panel message	Description	Recommended action
002-Option ROM Checksum Error	System ROM or expansion board option ROM checksum.	1. Verify the correct ROM. 2. Flash the ROM if needed. 3. If an expansion board was recently added, remove it to see if the problem remains. 4. Clear CMOS. 5. If the message disappears, there might be a problem with the expansion card. 6. Replace the system board.
003-System Board Failure	DMA or timers.	1. Clear CMOS. 2. Replace the system board.

Table 7-1 POST numeric codes and text messages (continued)

Control panel message	Description	Recommended action
005-Real-Time Clock Power Loss	Invalid time or date in configuration memory. RTC (real-time clock) battery might need to be replaced.	Reset the date and time under Control Panel (Computer Setup can also be used). If the problem persists, replace the RTC battery. See Removal and replacement procedures on page 27 for instructions on installing a new battery.
008-Microcode Patch Error	Processor is not supported by the BIOS.	1. Upgrade BIOS to proper version. 2. Change the processor.
009-PMM Allocation Error during MEBx Download	Memory error during POST execution of the Management Engine (ME) BIOS Extensions option ROM.	1. Reboot the computer. 2. Unplug the power cord, reseat the memory modules, and reboot the computer. 3. If the memory configuration was recently changed, unplug the power cord, restore the original memory configuration, and reboot the computer. 4. If the error persists, replace the system board.
00A-Product Information Not Valid	The product information programmed into the system board is missing or invalid.	Use Computer Setup (F10) Utility on page 79 to update this information.
00B-MEBx Module did not checksum correctly	Memory error during POST execution of the Management Engine (ME) BIOS Extensions option ROM.	1. Reboot the computer. 2. Unplug the power cord, reseat the memory modules, and reboot the computer. 3. If the memory configuration was recently changed, unplug the power cord, restore the original memory configuration, and reboot the computer. 4. If the error persists, replace the system board.
00C-PMM Deallocation Error during MEBx Cleanup	Memory error during POST execution of the Management Engine (ME) BIOS Extensions option ROM.	1. Reboot the computer. 2. Unplug the power cord, reseat the memory modules, and reboot the computer. 3. If the memory configuration was recently changed, unplug the power cord, restore the original memory configuration, and reboot the computer. 4. If the error persists, replace the system board.

Table 7-1 POST numeric codes and text messages (continued)

Control panel message	Description	Recommended action
00D-Setup Error during MEBx Execution	MEBx selection or exit resulted in a setup failure.	1. Reboot the computer. 2. Unplug the power cord, reseat the memory modules, and reboot the computer. 3. If the memory configuration was recently changed, unplug the power cord, restore the original memory configuration, and reboot the computer. 4. If the error persists, replace the system board.
00E-Inventory Error during MEBx Execution	BIOS information passed to the MEBx resulted in a failure.	1. Reboot the computer. 2. If the error persists, update to the latest BIOS version. 3. If the error still persists, replace the system board.
00F-Interface Error during MEBx Execution	MEBx operation experienced a hardware error during communication with the ME.	1. Reboot the computer. 2. If the error persists, update to the latest BIOS version. 3. If the error still persists, replace the system board.
100-Front Audio Not Connected	Front audio cable has been detached or unseated from system board.	Reconnect or replace front audio cable.
2E1-MemorySize Error	Memory amount has changed since the last boot (memory added or removed).	The system memory size is different from the last startup. The most common reason is the removal of memory from the system board. Press the f1 key to save the memory changes.
2E2-Memory Error	Memory module configuration failed during startup.	1. Be sure that memory modules are correctly installed. 2. Verify proper memory module type. 3. Remove and replace the identified faulty memory modules. 4. If the error persists after replacing memory modules, replace the system board.
2E3-Incompatible Memory Module in Memory Socket(s) X, X, ...	A memory module in memory socket identified in the error message is missing critical SPD information, or is incompatible with the chipset.	1. Verify proper memory module type. 2. Try another memory socket. 3. Replace with a supported module.
2E4-DIMM Configuration Warning	Populated DIMM Configuration is not optimized.	Rearrange the DIMMs so that each channel has the same amount of memory.

Table 7-1 POST numeric codes and text messages (continued)

Control panel message	Description	Recommended action
2E5-ECC Memory Module Detected on Unsupported Platform	Recently added memory modules support ECC memory error correction.	1. If additional memory was recently added, remove it to see if the problem remains. 2. Check product documentation for memory support information.
2E6-Memory Not Configured Correctly for Proper MEBx Execution	DIMM1 is not installed.	Be sure that a memory module is in the DIMM1 socket and that it is properly seated.
300-Configuration Change Warning	A change in storage configuration has been detected (see the Boot Options menu in BIOS Setup to enable this feature). Either the installed hardware has changed, storage or firmware mode might have been changed, or a storage device might have failed to respond.	If no changes were made before this warning, check that the drives are connected properly to power cables and system board. User Diagnostics (f2 during startup) might help identify any problem with specific devices.
301-Hard Disk 1: SMART Hard Drive Detects Imminent Failure	Hard drive is about to fail. (Some hard drives have a hard drive firmware patch that will fix an erroneous error message.)	1. Determine whether the hard drive is giving correct error message. Run the Drive Protection System test under using F2 Diagnostics when booting the computer. 2. Apply hard drive firmware patch if applicable. (Available at http://www.hp.com/support.) 3. Back up contents and replace hard drive.
302-Hard Disk 2: SMART Hard Drive Detects Imminent Failure	Hard drive is about to fail. (Some hard drives have a hard drive firmware patch that will fix an erroneous error message.)	1. Determine whether the hard drive is giving correct error message. Run the Drive Protection System test under using F2 Diagnostics when booting the computer. 2. Apply hard drive firmware patch if applicable. (Available at http://www.hp.com/support.) 3. Back up contents and replace hard drive.
309 - 30C: Hard Disk 3-6: SMART Hard Drive Detects Imminent Failure	Hard drive is about to fail. (Some hard drives have a hard drive firmware patch that will fix an erroneous error message.)	1. Determine whether hard drive is giving correct error message. Run the Drive Protection System test under using F2 Diagnostics when booting the computer. 2. Apply hard drive firmware patch if applicable. (Available at http://www.hp.com/support.) 3. Back up contents and replace hard drive.
3F0-Boot Device Not Found	Boot device not found.	Insert boot device or load operating system.

Table 7-1 POST numeric codes and text messages (continued)

Control panel message	Description	Recommended action
3F1–Hard Disk 1 Error	Hard disk 1 error.	1. Check and/or replace cables. 2. Clear CMOS. 3. Replace the hard disk drive.
3F2–Hard Disk 2 Error	Hard disk 2 error.	1. Check and/or replace cables. 2. Clear CMOS. 3. Replace the hard disk drive.
400-Serial Port A Address Conflict Detected	Both external and internal serial ports are assigned to the same resources.	1. Remove any serial port expansion cards. 2. Clear CMOS. 3. Reconfigure card resources and/or run Computer Setup or Windows utilities.
401-Serial Port B Address Conflict Detected	Both external and internal serial ports are assigned to the same resources.	1. Remove any serial port expansion cards. 2. Clear CMOS. 3. Reconfigure card resources and/or run Computer Setup or Windows utilities.
402-Serial Port C Address Conflict Detected	Both external and internal serial ports are assigned to the same resources.	1. Remove any serial port expansion cards. 2. Clear CMOS. 3. Reconfigure card resources and/or run Computer Setup or Windows utilities.
403-Serial Port D Address Conflict Detected	Both external and internal serial ports are assigned to the same resources.	1. Remove any serial port expansion cards. 2. Clear CMOS. 3. Reconfigure card resources and/or run Computer Setup or Windows utilities.
419-Out of Memory Space for Option ROMs	Recently added PCI expansion card contains an option ROM too large to download during POST.	If a PCI expansion card was recently added, remove it to see if the problem remains.
41A-Front USB1/USB2 Not Connected	Front USB cable has been detached or unseated from system board.	Reconnect or replace front USB cable.
43A-USB Type-C I2C Not Connected	Cable is required between I2C on card and USB-C on the system board.	Install cable between I2C on card and USB-C on the system board.
500–BIOS Recovery	A system BIOS recovery has occurred.	Not applicable.
70x-Wireless Mode Not Supported	The system has detected a wireless module installed in the system that is not supported and has been disabled.	Replace with a supported module.

Table 7-1 POST numeric codes and text messages (continued)

Control panel message	Description	Recommended action
800-Keyboard Error	Keyboard failure.	1. Reconnect keyboard with computer turned off. 2. Check connector for bent or missing pins. 3. Be sure that none of the keys are pressed. 4. Replace keyboard.
801-Keyboard or System Unit Error	Keyboard failure.	1. Reconnect the keyboard with computer turned off. 2. Be sure that none of the keys are pressed. 3. Replace the keyboard. 4. Replace the system board.
900-CPU Fan Not Detected	CPU fan is not connected or might have malfunctioned.	1. Reseat fan. 2. Reseat fan cable. 3. Replace fan.
901-Chassis, Rear Chassis, or Front Chassis Fan not Detected	Fan is not connected or might have malfunctioned.	1. Reseat fan. 2. Reseat fan cable. 3. Replace fan.
90B-Fan Failure	The system has detected that a cooling fan is not operating correctly.	1. Reseat fan. 2. Reseat fan cable. 3. Replace fan.
90D-System Temperature	Thermal shutdown occurred. The system BIOS has detected your machine was previously shut down to avoid overheating. Overheating might occur if the cooling vents are blocked or the operating temperature exceeds the system specifications. The machine should return to normal operation once the situation is resolved.	Be sure that the system has proper airflow.

Interpreting system validation diagnostic front panel LEDs and audible codes

This section identifies the front panel light codes as well as the audible codes that can occur before or during POST that might not have an error code or text message associated with them.

⚠ CAUTION: When the computer is plugged into an AC power source, voltage is always applied to the system board. To reduce the risk of personal injury from electrical shock and/or hot surfaces, be sure to disconnect the power cord from the AC outlet and allow the internal system components to cool before touching.

During the system validation phase that occurs at system startup, the BIOS validates the functionality of the following subsystems and conditions:

- AC adapter
- System board power
- Processor failure
- BIOS corruption
- Memory failure
- Graphics failure
- System board failure
- BIOS authentication failure

If an error is detected, specific patterns of long and short blinks, accompanied by long and short beeps (where applicable) are used to identify the error. These patterns make up a two-part code:

- Major—the category of the error
- Minor—the specific error within the category

NOTE: Single beep/blink codes are not used.

Table 7-2 **Beep pattern error identification**

Number of long beeps/blinks	Error category
1	Not used
2	BIOS
3	Hardware
4	Thermal
5	System board

Patterns of blink/beep codes are determined by using the following parameters:

- 1-second pause occurs after the last major blink.
- 2-second pause occurs after the last minor blink.
- Beep error code sequences occur for the first five iterations of the pattern and then stop.
- Blink error code sequences continue until the computer is unplugged or the power button is pressed.

NOTE: Not all diagnostic lights and audible codes are available on all models.

The red LED blinks to represent the major error category (long blinks). The white LED blinks to represent the minor error category (short blinks). For example, *3,5* indicates 3 long red blinks and 5 short white blinks to communicate the processor is not detected.

Table 7-3 Interpreting system validation diagnostic front panel LEDs and audible codes

Category	Major/minor code	Description
BIOS	2.2	The main area (DXE) of BIOS has become corrupted and there is no recovery binary image available.
	2.3	The embedded controller policy requires the user to enter a key sequence.
	2.4	The embedded controller is checking or recovering the boot block.
Hardware	3.2	The embedded controller has timed out waiting for BIOS to return from memory initialization.
	3.3	The embedded controller has timed out waiting for BIOS to return from graphics initialization.
	3.4	The system board displays a power failure (crowbar).*
	3.5	The processor is not detected.*
	3.6	The processor does not support an enabled feature.
	3.7	The access panel/top cover has been opened since last boot.
Thermal	4.2	A processor over temperature condition has been detected.*
	4.3	An ambient temperature over temperature condition has been detected.
	4.4	An MXM over temperature condition has been detected.
System board	5.2	The embedded controller cannot find valid firmware.
	5.3	The embedded controller has timed out waiting for the BIOS.
	5.4	The embedded controller has timed out waiting for BIOS to return from system board initialization.
	5.5	The embedded controller rebooted the system after a possible lockup condition had been detected through the use of a System Health Timer, Automated System Recovery Timer, or other mechanism.

* Indicates hardware triggered event; all other events are controlled by the BIOS.

8 Password security and resetting CMOS

This computer supports two security password features that you can establish through the Computer Setup Utilities menu: administrator password and power-on password.

When you establish only an administrator password, any user can access all the information on the computer except Computer Setup. When you establish only a power-on password, the power-on password is required to access Computer Setup and any other information on the computer. When you establish both passwords, only the administrator password will give you access to Computer Setup.

When both passwords are set, you can use the administrator password in place of the power-on password as an override to log in to the computer. This feature is useful for a network administrator.

IMPORTANT: Back up the BIOS settings or save them as custom defaults in case you need them later. You can back up in Computer Setup or with the BiosConfigUtility tool available from www.hp.com. See Computer Setup (F10) Utility on page 79 for information about backing up the BIOS settings.

Changing a setup or power-on password

Use this procedure to change a password.

To change the power-on or setup password, complete the following steps:

1. Turn on or restart the computer.
   - To change the setup password, go to step 2.
   - To change the power-on password, go to step 3.
2. To change the setup password, as soon as the computer turns on:
   - Press esc while the “Press the ESC key for Startup Menu” message is displayed.
   - Press f10 to enter Computer Setup.
3. When the key icon appears, type your current password, a slash (/) or alternate delimiter character, your new password, another slash (/) or alternate delimiter character, and your new password again as shown:

   ```
   current password/new password/new password
   ```

   NOTE: Type the new password carefully because the characters do not appear on the screen.
4. Press enter.

The new password will take effect the next time the computer is restarted.

Deleting a setup or power-on password

Use this procedure to delete a password.

To delete the power-on or setup password, complete the following steps:

1. Turn on or restart the computer.
   - To delete the Setup password, go to step 2.
   - To delete the Power-on password, go to step 3.
2. To delete the Setup password, as soon as the computer turns on:
   - Press esc while the “Press the ESC key for Startup Menu” message is displayed.
   - Press f10 to enter Computer Setup.
3. When the key icon appears, type your current password, a slash (/) or alternate delimiter character, your new password, another slash (/) or alternate delimiter character, and your new password again as shown:

   `current password/new password/new password`
4. Press enter.

Clearing and resetting the CMOS

Use this procedure to clear and reset CMOS.

The computer’s configuration memory (CMOS) stores information about the computer’s configuration.

The CMOS button resets CMOS but does not clear the power-on and setup passwords.

1. Turn off the computer and any external devices, and disconnect the power cord from the power outlet.
2. Disconnect all external equipment connected to the computer.

⚠ **CAUTION:** To reduce the risk of personal injury from electrical shock, hot surfaces, or both, be sure to disconnect the power cord from the AC outlet, and allow the internal system components to cool before touching.

IMPORTANT: When the computer is plugged in, the power supply always has voltage applied to the system board even when the unit is turned off. Failure to disconnect the power cord can result in damage to the system.

Static electricity can damage the electronic components of the computer or optional equipment. Before beginning these procedures, ensure that you are discharged of static electricity by briefly touching a grounded metal object. See the *Safety & Regulatory Information* guide for more information.

3. Remove the access panel.

IMPORTANT: Pushing the CMOS button resets CMOS values to factory defaults. It is important to back up the computer CMOS settings before resetting them in case they are needed later. Backup is easily done through Computer Setup. See Computer Setup (F10) Utility on page 79 for information on backing up the CMOS settings.

4. Remove the PCIe single-slot riser assembly.

5. Locate, press, and hold the CMOS button in for 5 seconds.

NOTE: Make sure you have disconnected the AC power cord from the AC outlet. The CMOS button will not clear CMOS if the power cord is connected.

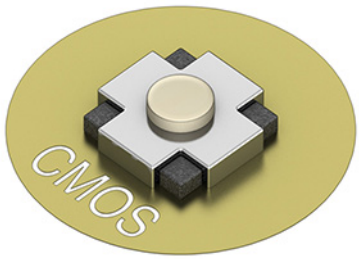

6. Replace the access panel.
7. Reconnect the external devices.
8. Plug in the computer and turn on power.

NOTE: You will receive POST error messages after clearing CMOS and rebooting advising you that configuration changes have occurred. Use Computer Setup to reset any special system setups along with the date and time.

For instructions on Computer Setup, see Computer Setup (F10) Utility on page 79.

9 Statement of memory volatility

For general information regarding nonvolatile memory in HP business computers, and to restore nonvolatile memory that can contain personal data after the system has been turned off and the hard drive has been removed, use these instructions.

HP business computer products that use Intel®-based or AMD®-based system boards contain volatile DDR memory. The amount of nonvolatile memory present in the system depends upon the system configuration. Intel-based and AMD-based system boards contain nonvolatile memory subcomponents as originally shipped from HP, with the following assumptions:

- No subsequent modifications were made to the system.
- No applications, features, or functionality were added to or installed on the system.

Following system shutdown and removal of all power sources from an HP business computer system, personal data can remain on volatile system memory (DIMMs) for a finite period of time and also remains in nonvolatile memory. Use the following steps to remove personal data from the computer, including the nonvolatile memory found in Intel-based and AMD-based system boards.

NOTE: If your tablet has a keyboard base, connect to the keyboard base before beginning steps in this chapter.

Current BIOS steps

Use these instructions to restore nonvolatile memory.

1. Follow these steps to restore the nonvolatile memory that can contain personal data. Restoring or reprogramming nonvolatile memory that does not store personal data is neither necessary nor recommended.

   a. Turn on or restart the computer, and then quickly press esc.

   NOTE: If the system has a BIOS administrator password, type the password at the prompt.

   b. Select **Main**, select **Apply Factory Defaults and Exit**, and then select **Yes** to load defaults. The computer restarts.

   c. During the restart, press esc while the "Press the ESC key for Startup Menu" message is displayed at the bottom of the screen.

   NOTE: If the system has a BIOS administrator password, type the password at the prompt.

   d. Select the **Security** menu, select **Restore Security Settings to Factory Defaults**, and then select **Yes** to restore security level defaults. The computer restarts.

   e. During the restart, press esc while the "Press the ESC key for Startup Menu" message is displayed at the bottom of the screen.

   NOTE: If the system has a BIOS administrator password, type the password at the prompt.

f. If an asset or ownership tag is set, select the **Security** menu and scroll down to the **Utilities** menu. Select **System IDs**, and then select **Asset Tracking Number**. Clear the tag, and then make the selection to return to the prior menu.

g. If a DriveLock password is set, select the **Security** menu, and scroll down to **Hard Drive Utilities** under the **Utilities** menu. Select **Hard Drive Utilities**, select **DriveLock**, and then clear the check box for **DriveLock password on restart**. Select **OK** to proceed.

h. Select the **Main** menu, and then select **Reset BIOS Security to factory default**. Select **Yes** at the warning message. The computer restarts.

i. During the restart, press esc while the "Press the ESC key for Startup Menu" message is displayed at the bottom of the screen.

NOTE: If the system has a BIOS administrator password, type the password at the prompt.

j. Select the **Main** menu, select **Apply Factory Defaults and Exit**, select **Yes** to save changes and exit, and then select **Shutdown**.

k. Restart the system. If the system has a Trusted Platform Module (TPM), fingerprint reader, or both, one or two prompts will appear—one to clear the TPM and the other to Reset Fingerprint Sensor. Press or tap f1 to accept or f2 to reject.

l. Remove all power and system batteries for at least 24 hours.

2. Complete one of the following tasks:

- Remove and retain the storage drive.
- Clear the drive contents by using a third-party utility designed to erase data from an SSD.
- Clear the contents of the drive by using the following BIOS Setup Secure Erase command option steps:

NOTE: If you clear data using Secure Erase, you cannot recover it.

a. Turn on or restart the computer, and then quickly press esc.

b. Select the **Security** menu and scroll down to the esc menu.

c. Select **Hard Drive Utilities**.

d. Finish by completing one of these tasks:

- Under **Utilities**, select **Secure Erase**, select the hard drive storing the data you want to clear, and then follow the on-screen instructions to continue.
- Clear the contents of the drive using the following Disk Sanitizer commands steps:

i. Turn on or restart the computer, and then quickly press esc.

ii. Select the **Security** menu and scroll down to the **Utilities** menu.

iii. Select **Hard Drive Utilities**.

iv. Under **Utilities**, select **Disk Sanitizer**, select the hard drive with the data that you want to clear, and then follow the on-screen instructions to continue.

NOTE: The amount of time it takes for Disk Sanitizer to run can take several hours. Plug the computer into an AC outlet before starting.

Nonvolatile memory usage

Use this table to troubleshoot nonvolatile memory usage.

Table 9-1 Troubleshooting information for nonvolatile memory usage

Description	Volatility description	Storage user data	How to erase
Primary storage device, holds the OS, applications, and application settings	Nonvolatile, 8-256 GB of eMMC or NVMe SSD storage, removable	Yes[1]	Follow instructions below under "Erase the Primary Storage Device."
System memory (RAM), holds transient data during system operation	Volatile, SODIMM socket. Removable (4 GB/8 GB/16 GB)	Yes	Unplug unit from power.
Permanent system BIOS settings	Nonvolatile; 16 KB; stored	No[2]	Follow instructions below under "Clearing BIOS Settings."
System boot ROM (BIOS)	Nonvolatile memory, 128 Mbit (16 MB) socketed, removable	No	Download the latest BIOS for your model from the HP website and follow the instructions to flash the BIOS that are on the website.
RTC (CMOS) RAM	Volatile memory, 256 bytes located in AMD embedded System on Chip (SoC)	No	**Desktop computers with a CMOS button:** Unplug unit from main power, remove top cover and press the **Clear CMOS** button. **Notebook and desktop computers without a CMOS button:** 1. Press and hold power button for 12 seconds. 2. Press Windows key + V, and then press power button.
Keyboard/mouse (ROM)	Nonvolatile, 2 KB embedded in the super I/O controller (SIO2)	Yes	N/A
Keyboard/mouse (RAM)	Volatile, 256 bytes embedded in the super I/O controller (SIO2)	No	Unplug unit from main power.
LOM EEPROM	Nonvolatile, 2 MB embedded in LAN controller	No	N/A
Trusted Platform Module (TPM)	Nonvolatile; 51 KB ROM for firmware and 38 KB system parametric data	No[3]	Follow instructions below under "Clearing TPM."

[1] Under typical operation, the only user data stored on the primary storage device are preferences for device configuration and settings for connections. However, the administrator can configure the system to allow users to store data locally.

[2] The only user data potentially stored in BIOS Settings are the ownership and asset tags, administrator password, and startup password.

[3] The Trusted Platform Module might contain encrypted passwords or certificates generated from user or administrator input.

Questions and answers

Use this section to answer your questions about nonvolatile memory.

1. **How can the BIOS settings be restored (returned to factory settings)?**

IMPORTANT: The restore defaults feature does not securely erase any information on your hard drive. See question and answer 6 for steps to securely erase information.

The restore defaults feature does not reset the Custom Secure Boot keys. See question and answer 7 for information about resetting the keys.

   a. Turn on or restart the computer, and then quickly press esc.

   b. Select **Main**, and then select **Apply Factory Defaults and Exit**.

   c. Follow the on-screen instructions.

   d. Select **Main**, select **Save Changes and Exit**, and then follow the on-screen instructions.

2. **What is a UEFI BIOS?**

   The Unified Extensible Firmware Interface (UEFI) BIOS is an industry-standard software interface between the platform firmware and an operating system (OS). It replaces the older legacy BIOS architecture.

   The UEFI BIOS provides an interface to display the system information and configuration settings and to change the configuration of your computer before an OS is loaded. BIOS provides a secure runtime environment that supports a GUI. In this environment, you can use either a pointing device (touch screen, touchpad, pointing stick, or USB mouse) or the keyboard to navigate and make menu and configuration selections. The UEFI BIOS also contains basic system diagnostics.

   In addition, the UEFI BIOS works to initialize the computer's hardware before loading and executing the OS; the runtime environment allows the loading and execution of software programs from storage devices to provide more functionality, such as advanced hardware diagnostics (with the ability to display more detailed system information) and advanced firmware management and recovery software.

3. **Where is the UEFI BIOS located?**

   The UEFI BIOS is located on a flash memory chip. You must use a utility to write to the chip.

4. **What kind of configuration data is stored on the DIMM Serial Presence Detect (SPD) memory module? How would this data be written?**

The DIMM SPD memory contains information about the memory module, such as size, serial number, data width, speed and timing, voltage, and thermal information. This information is written by the module manufacturer and stored on an EEPROM. You cannot write to this EEPROM when the memory module is installed in a computer. Third-party tools do exist that can write to the EEPROM when the memory module is not installed in a computer. Various third-party tools are available to read SPD memory.

5. **What is meant by "Restore the nonvolatile memory found in Intel-based system boards"?**

   This message relates to clearing the Real Time Clock (RTC) CMOS memory that contains computer configuration data.

6. **How can the BIOS security be reset to factory defaults and erase the data?**

IMPORTANT: Resetting results in the loss of information.

These steps do not reset Custom Secure Boot Keys. See question and answer 7 for information about resetting the keys.

   a. Turn on or restart the computer, and then quickly press esc.

   b. Select **Main**, and then select **Reset Security to Factory Defaults**.

   c. Follow the on-screen instructions.

   d. Select **Main**, select **Save Changes and Exit**, and then follow the on-screen instructions.

7. **How can the Custom Secure Boot Keys be reset?**

   Secure Boot is a feature to ensure that only authenticated code can start on a platform. If you enabled Secure Boot and created Custom Secure Boot Keys, disabling Secure Boot does not clear the keys. You must also select to clear the Custom Secure Boot Keys. Use the same Secure Boot access procedure that you used to create the Custom Secure Boot Keys, but select to clear or delete all Secure Boot Keys.

   a. Turn on or restart the computer, and then quickly press esc.

   b. Select the **Security** menu, select **Secure Boot Configuration**, and then follow the on-screen instructions.

   c. At the **Secure Boot Configuration** window, select **Secure Boot**, select **Clear Secure Boot Keys**, and then follow the on-screen instructions to continue.

Using HP Sure Start (select products only)

Select computer models are configured with HP Sure Start, a technology that continuously monitors your computer's BIOS for attacks or corruption.

If the BIOS becomes corrupted or is attacked, HP Sure Start restores the BIOS to its previously safe state, without user intervention. Those select computer models ship with HP Sure Start configured and enabled. HP Sure Start is configured and already enabled so that most users can use the HP Sure Start default configuration. Advanced users can customize the default configuration.

To access the latest documentation on HP Sure Start, go to http://www.hp.com/support.

10 Power cord set requirements

The power supplies on some computers have external power switches.

The voltage select switch feature on the computer permits it to operate from any line voltage of 100 V AC to 120 V AC or 220 V AC to 240 V AC. Power supplies on those computers that do not have external power switches are equipped with internal switches that sense the incoming voltage and automatically switch to the proper voltage.

The power cord set received with the computer meets the requirements for use in the country where you purchased the equipment.

Power cord sets for use in other countries must meet the requirements of the country where you use the computer.

General requirements

These requirements are applicable to all countries.

1. The power cord must be approved by an acceptable accredited agency responsible for evaluation in the country where the power cord set will be installed.
2. The power cord set must have a minimum current capacity of 10 A (7 A Japan only) and a nominal voltage rating of 125 V AC or 250 V AC, as required by each country's power system.
3. The diameter of the wire must be a minimum of 0.75 mm^2 or 18 AWG, and the length of the cord must be between 1.8 m (6 ft) and 3.6 m (12 ft).

The power cord should be routed so that it is not likely to be walked on or pinched by items placed upon it or against it. Particular attention should be paid to the plug, electrical outlet, and the point where the cord exits from the product.

⚠ **WARNING!** Do not operate this product with a damaged power cord set. If the power cord set is damaged in any manner, replace it immediately.

Japanese power cord requirements

For use in Japan, use only the power cord received with this product.

IMPORTANT: Do not use the power cord received with this product on any other products.

Country-specific requirements

This information provides additional requirements specific to a country.

Table 10-1 **Power cord country-specific requirements**

Country	Accrediting Agency	Country	Accrediting Agency
Australia (1)	EANSW	Italy (1)	IMQ
Austria (1)	OVE	Japan (3)	METI
Belgium (1)	CEBC	Norway (1)	NEMKO
Canada (2)	CSA	Sweden (1)	SEMKO
Denmark (1)	DEMKO	Switzerland (1)	SEV
Finland (1)	SETI	United Kingdom (1)	BSI
France (1)	UTE	United States (2)	UL
Germany (1)	VDE		

1. The flexible cord must be Type HO5VV-F, 3-conductor, 0.75 mm^2 conductor size. Power cord set fittings (appliance coupler and plug) must bear the certification mark of the agency responsible for evaluation in the country where it will be used.
2. The flexible cord must be Type SVT or equivalent, No. 18 AWG, 3 conductor. The plug must be a 2-pole grounding type with a NEMA 5-15P (15 A, 125 V) or NEMA 6-15P (15 A, 250 V) configuration.
3. Appliance coupler, flexible cord, and plug must bear a T mark and registration number in accordance with the Japanese Dentori Law. Flexible cord must be Type VCT or VCTF, 3-conductor, 0.75 mm^2 conductor size. Plug must be a 2-pole grounding type with a Japanese Industrial Standard C8303 (7 A, 125 V) configuration.

11 Specifications

This section provides specifications for your computer.

Table 11-1 Specifications

	Metric	U.S.
Dimensions		
Height	29.4 mm	1.2 in
Width (landscape)	576.4 mm	22.7 in
Width (portrait)	570.4 mm	22.5 in
Depth	339.9 mm	13.4 in
Weight	6.8 kg	15.0 lbs
Temperature range		
Operating[1]	10°C to 35°C	50°C to 95°F
Nonoperating	-20°C to 60°C	-4°F to 140°F
Maximum altitude (unpressurized)		
Operating	3,048 m	10,000 ft
Nonoperating	9,144 m	30,000 ft
Relative humidity (noncondensing)		
Operating	10% to 90%	
Nonoperating (38.7°C max wet bulb)	5% to 95%	
Power supply		
Operating voltage range	90 V AC to 264 V AC	
Rated voltage range[2]	100 V AC to 240 V AC	
Rated line frequency	50 Hz to 60 Hz	
Operating line frequency	47 Hz to 63 Hz	
Power supply	280 W	
	230 W	

1 Operating temperature is derated 1.0°C per 300 m (1000 ft) to 3000 m (10,000 ft) above sea level; no direct sustained sunlight. Maximum rate of change is 10°C/hr. The upper limit might be limited by the type and number of options installed.

2 This system uses an active power factor-corrected power supply. This allows the system to pass the CE mark requirements for use in the countries of the European Union. The active power factor-corrected power supply also has the added benefit of not requiring an input-voltage range select switch.

Index

A

access panel
  locked 68
adjusting the head unit on an
  Advanced stand 8
Advanced Fanless Hub
  removal and replacement 30
Advanced menu, Computer
  Setup 89
antennas
  removal 65
audible codes 100

B

back plate
  removal and replacement 36
backlight board
  removal 54
barcode scanner
  removal and replacement 39
base
  removal and replacement 27
battery
  disposal 18, 25, 26
battery replacement 61
beep codes 100
blinking lights 100
booting options
  Full Boot 95
  Quick Boot 95

C

cable management 18
camera module
  removal 55
changing a Power-On
  password 103
changing a Setup password 103
cleaning
  computer 18, 21, 24
  mouse 18, 21, 25
  safety precautions 18, 21
cleaning your computer
  disinfecting 22
  HP Easy Clean 23
  removing dirt and debris 22
CMOS
  backing up 104
  clearing and resetting 103, 104
column hub
  removal and replacement 29
column hub features 5
computer cleaning 18, 21, 24
computer major components
  illustrated 11
Computer Setup
  access problem 68
  Advanced menu 89
  Main menu 80
  Security menu 84
Computer Setup Utility 79
country power cord set
  requirements 111
Customer Support 67

D

deleting a Power-On
  password 103
deleting a Setup password 103
display panel
  illustrated 11
  removal 64

E

electrostatic discharge (ESD) 18
  preventing damage 18, 19
error
  codes 95, 100
error messages 95
expansion slot cover
  removal and replacement 37

F

F10 Setup 79
  access problem 68
fan
  illustrated 12
fanless hub features 4
fans
  removal and replacement 57
fingerprint reader
  removal and replacement 40

G

general problems 68
grounding methods 18, 19

H

hard drive
  proper handling 18, 25
hardware installation
  problems 73
heat sink
  illustrated 12
  removal and replacement 58
helpful hints 68
HP Sure Start 106, 110
Hub optional features 5

I

illustrated parts catalog 11
install
  security cable on Engage One
    Pro 9
  security cable on the fanless
    hub 9
installing
  battery 61
  memory 46
integrated features 3
internal system cover
  removal and replacement 45

K

keyboard
  cleaning 18, 21, 24
keyboard problems 72

L

lights
  blinking PS/2 keyboard 100

M

magnetic stripe reader
  removal and replacement 42
Main menu, Computer Setup 80
memory
  nonvolatile 106
  problems 76

removal and replacement 46
socket population 46
specifications 46
volatile 106
memory module
illustrated 12
installation 46
microphone board
removal 52
miscellaneous parts 15
mouse
cleaning 18, 21, 25
problems 72

N

network problems 75
nonvolatile memory 106
numeric error codes 95

O

operating guidelines 18, 21
overheating, prevention 18, 21

P

password
Power-On 103
security 103
Setup 103
POST error messages 95
power button
Engage One Pro 6
fanless hub 7
power button board
removal 51
power cord
spare part numbers 17
power cord set requirements
country specific 111
power problems 71
power supply
operating voltage range 113
Power-On password 103
problems
Computer Setup 68
F10 Setup 68
general 68
hardware installation 73
keyboard 72
memory 76
mouse 72
network 75
power 71
software 78
processor
removal and replacement 59

R

removal and replacement
Advanced Fanless Hub 30
back plate 36
barcode scanner 39
column hub 29
expansion cover 37
fans 57
fingerprint reader 40
heat sink 58
internal system cover 45
magnetic stripe reader 42
memory 46
processor 59
speakers 56
SSD 43
stability base 27
stand 34
system board 62
VESA hub 31
WLAN module 49
removing
10 inch customer-facing display 32
antennas 65
backlight board 54
battery 61
camera module 55
customer-facing display 38
customer-facing display, 10 inch 32
display panel 64
microphone board 52
power button board 51
stand cover 28
touch board 53
removing personal data from volatile system memory 106
resetting
CMOS 104

S

safety precautions
cleaning 18, 21
screws, correct size 18, 25
Security menu, Computer Setup 84
serial number location
Engage One Pro 8
fanless hub 8
service considerations 18, 25
Setup password 103
software
problems 78
servicing computer 18, 25
solid-state drive
illustrated 12
speakers
illustrated 13
removal and replacement 56
specifications
computer 113
memory 46
SSD
removal and replacement 43
stand
removal and replacement 34
static electricity 18
system board
illustrated 12
removal and replacement 62
system memory, removing personal data from volatile 106

T

temperature control 18, 21
tilting the head unit on a Pro stand 7
tools, servicing 18, 25
Torx T15 screwdriver 18, 25
touch board
removal 53
troubleshooting without diagnostics 67

U

using Computer Setup Utilities 79

V

ventilation, proper 18, 21
VESA hub
removal and replacement 31
VESA hub features 4

W

WLAN module
illustrated 13
removal and replacement 49