1 USB Security Clamp Placement

The security clamp attaches to the USB port of the SonicWall SonicWave 432e/432i wireless access point.

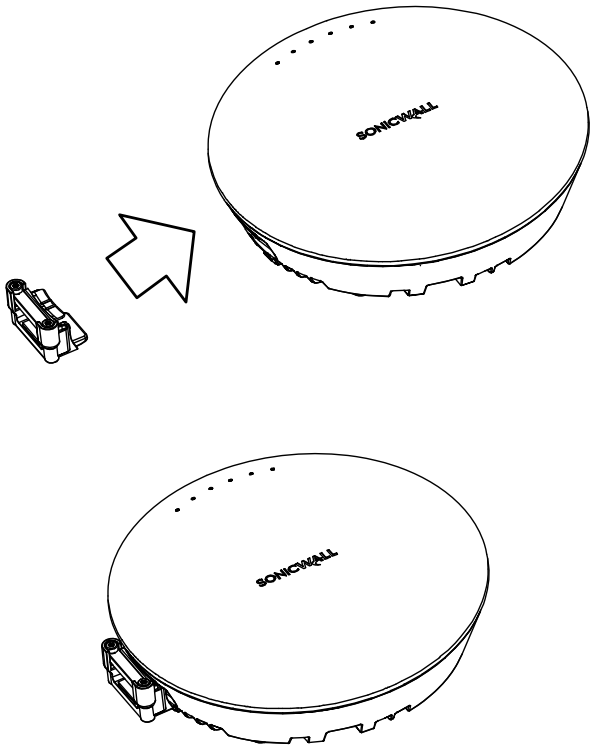

2 Attaching the Clamp to the Appliance

Use the screw torq to fasten the USB clamp to the bottom of the appliance.

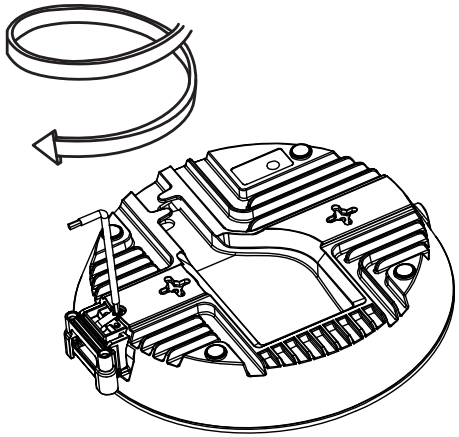

3 Inserting the USB Device

Insert the USB device into the USB port.

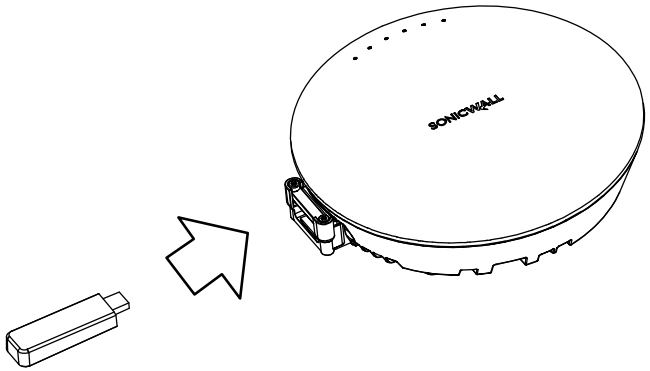

4 Securing the USB Device

Use the screw torq to tighten the two front screws of the USB clamp. This will secure the USB device in place.

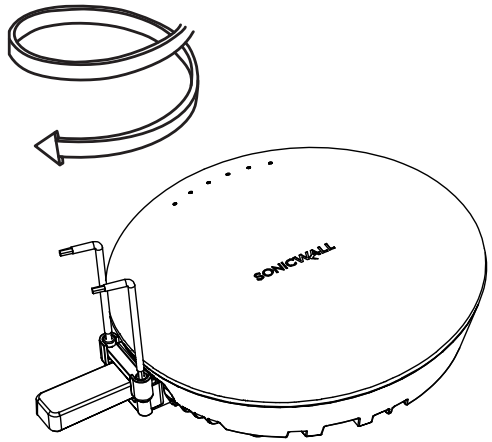

5 USB Device Secured

The USB device is now securely attached to the SonicWave 432e/432i.

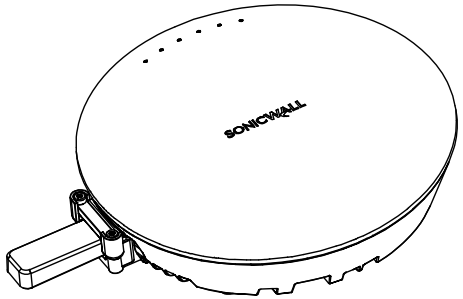

6 Safety and regulatory information

For safety, environmental and regulatory Information, refer to the documentation provided with the SonicWall appliance.

Copyright © 2020 SonicWall Inc. All rights reserved.

SonicWall is a trademark or registered trademark of SonicWall Inc. and/or its affiliates in the U.S.A. and/or other countries. All other trademarks are property of their respective owners.

The information in this document is provided in connection with SonicWall Inc. and/or its affiliates' products. No license, express or implied, by estoppel or otherwise, to any intellectual property right is granted by this document. SonicWall Inc. and/or its affiliates do not make any commitment to update the information contained in this document. For more information, visit http://www.sonicwall.com/legal.

Legend

WARNING: A WARNING icon indicates a potential for property damage, personal injury, or death.

CAUTION: A CAUTION icon indicates potential damage to hardware or loss of data if instructions are not followed.

IMPORTANT, NOTE, TIP, MOBILE, or VIDEO: An information icon indicates supporting information.

SonicWall® SonicWave 432e/432i USB Security Clamp

Installation and Assembly Guide

SonicWave 432e/432i USB Clamp Installation and Assembly Guide
Updated - May 2020
232-005303-50 Rev A