# Maintenance and Service Guide

# HP ProBook 4 G2iS 14 inch Notebook AI PC

**SUMMARY**

This guide provides maintenance information about such topics as spare parts, removal and replacement of parts, security, and backing up.

# Legal information

© Copyright 2026 HP Development Company, L.P.

Bluetooth is a trademark owned by its proprietor and used by HP Inc. under license. ChromeOS is a trademark of Google LLC. Intel and Core are trademarks of Intel Corporation or its subsidiaries in the U.S. and/or other countries. Microsoft, Windows, and Windows Hello are either registered trademarks or trademarks of Microsoft Corporation in the United States and/or other countries. USB Type-C, USB-C, and the USB 5 Gbps and USB 10 Gbps port logos are trademarks or registered trademarks of USB Implementers Forum. DisplayPort and the DisplayPort logo are trademarks owned by the Video Electronics Standards Association (VESA) in the United States and other countries. Wi-Fi is a registered trademark of Wi-Fi Alliance.

The information contained herein is subject to change without notice. The only warranties for HP products and services are set forth in the express warranty statements accompanying such products and services. Nothing herein should be construed as constituting an additional warranty. HP shall not be liable for technical or editorial errors or omissions contained herein.

First Edition: September 2026

Document Part Number: Q23393-001

**Product notice**

This guide describes features that are common to most products. Some features might not be available on your computer.

Not all features are available in all editions or versions of Windows. Systems might require upgraded and/or separately purchased hardware, drivers, software, or BIOS update to take full advantage of Windows functionality. Windows is automatically updated, which is always enabled. High-speed internet and Microsoft account required. ISP fees might apply and additional requirements might apply over time for updates. See http://www.windows.com. **If your product ships with Windows in S Mode:** Windows in S Mode works exclusively with apps from the Microsoft Store within Windows. Certain default settings, features, and apps cannot be changed. Some accessories and apps that are compatible with Windows might not work (including some antivirus, PDF writers, driver utilities, and accessibility apps), and performance might vary, even if you switch out of S Mode. If you switch to Windows, you cannot switch back to S Mode. Learn more at Windows.com/SmodeFAQ.

To access the latest user guides, go to http://www.hp.com/support, and follow the instructions to find your product. Then select **Setup & User Guides**.

To help us improve this document, please send any suggestions, comments, or errors to mailto:hp.doc.feedback@hp.com. Include the document part number when submitting your feedback.

**Software Terms**

By installing, copying, downloading, or otherwise using any software product preinstalled on this computer, you agree to be bound by the terms of the HP End User License Agreement (EULA). If you do not accept these license terms, your sole remedy is to return the entire unused product (hardware and software) within 14 days for a full refund subject to the refund policy of your seller.

For any further information or to request a full refund of the price of the computer, please contact your seller.

# Safety warning notice

Reduce the possibility of heat-related injuries or of overheating the computer by following the practices described.

⚠ **WARNING!** To reduce the possibility of heat-related injuries or of overheating the computer, do not place the computer directly on your lap or obstruct the computer air vents. Use the computer only on a hard, flat surface. Do not allow another hard surface, such as an adjoining optional printer, or a soft surface, such as pillows, rugs or clothing, to block airflow. Also, do not allow the AC adapter to come into contact with the skin or a soft surface, such as pillows, rugs or clothing, during operation. The computer and the AC adapter provided by HP comply with the user-accessible surface temperature limits defined by applicable safety standards.

## Important notice about Customer Self-Repair parts

Your computer includes Customer Self-Repair parts and parts that should be accessed only by an authorized service provider.

**IMPORTANT:** See Removal and replacement procedures for Customer Self-Repair parts on page 27 for details.

Accessing parts described in Removal and replacement procedures for authorized service provider parts on page 38 can damage the computer or void your warranty.

# Table of contents


1 Product description ..... 1

2 Getting to know your computer ..... 4

Right side ..... 4

Left side ..... 5

Display ..... 5

Low blue light mode (select products only) ..... 6

Wake-on-voice (select products only) ..... 6

Keyboard area ..... 7

Touchpad settings and components ..... 7

Touchpad settings ..... 7

Adjusting touchpad settings ..... 7

Turning on the touchpad ..... 8

Touchpad components ..... 8

Lights ..... 8

Special keys ..... 9

Bottom ..... 11

Labels ..... 12

3 Illustrated parts catalog ..... 13

Computer major components ..... 13

Display assembly subcomponents ..... 15

Miscellaneous parts ..... 17

4 Removal and replacement procedures preliminary requirements ..... 19

Tools required ..... 19

Service considerations ..... 19

Plastic parts ..... 19

Cables and connectors ..... 19

Drive handling ..... 19

Electrostatic discharge information ..... 20

Generating static electricity ..... 20

Preventing electrostatic damage to equipment ..... 21

Personal grounding methods and equipment ..... 21

Grounding the work area ..... 22

Recommended materials and equipment ..... 22

Cleaning your computer ..... 23

Enabling HP Easy Clean (select products only) ..... 23

Removing dirt and debris from your computer ..... 23

Cleaning your computer with a disinfectant ..... 24

Caring for wood veneer (select products only) ..... 25

Packaging and transporting guidelines ..... 25
Accessing support information ..... 25

**5 Removal and replacement procedures for Customer Self-Repair parts ..... 27**

Component replacement procedures ..... 27
Preparation for disassembly ..... 27
Bottom cover ..... 27
Battery ..... 30
Removing and reinstalling the same battery ..... 30
Installing a new battery ..... 32

**6 Removal and replacement procedures for authorized service provider parts ..... 38**

Component replacement procedures ..... 38
Solid-state drive ..... 38
Speakers ..... 39
Touchpad ..... 40
I/O board ..... 41
Fans ..... 43
Heat sink ..... 44
System board ..... 45
Display assembly ..... 48
Keyboard ..... 53

**7 Backing up, restoring, and recovering ..... 56**

Backing up information and creating recovery media ..... 56
Using Windows tools for backing up ..... 56
Using the HP Cloud Recovery Download Tool to create a recovery USB flash drive (select products only) ..... 56
Restoring and recovering your system ..... 56
Creating a system restore ..... 57
Restoring and recovery methods ..... 57
Recovering using the HP Recovery USB flash drive ..... 57
Changing the computer boot order ..... 58
Using HP Sure Recover (select products only) ..... 58

**8 Using HP PC Hardware Diagnostics ..... 59**

Using HP PC Hardware Diagnostics Windows (select products only) ..... 59
Using an HP PC Hardware Diagnostics Windows hardware failure ID code ..... 59
Accessing HP PC Hardware Diagnostics Windows ..... 59
Accessing HP PC Hardware Diagnostics Windows from HP Support Assistant (select products only) ..... 59
Accessing HP PC Hardware Diagnostics Windows from the Start menu (select products only) ..... 60
Downloading HP PC Hardware Diagnostics Windows ..... 60
Downloading the latest HP PC Hardware Diagnostics Windows version from HP ..... 60
Downloading the HP PC Hardware Diagnostics Windows from the Microsoft Store ..... 60
Downloading HP Hardware Diagnostics Windows by product name or number (select products only) ..... 61
Installing HP PC Hardware Diagnostics Windows ..... 61
Using HP PC Hardware Diagnostics UEFI ..... 61

Using an HP PC Hardware Diagnostics UEFI hardware failure ID code ..... 61
Starting HP PC Hardware Diagnostics UEFI ..... 61
Starting HP PC Hardware Diagnostics UEFI through HP Hotkey Support software (select products only) ..... 62
Downloading HP PC Hardware Diagnostics UEFI to a USB flash drive ..... 62
Downloading the latest HP PC Hardware Diagnostics UEFI version ..... 63
Downloading HP PC Hardware Diagnostics UEFI by product name or number (select products only) ..... 63
Using Remote HP PC Hardware Diagnostics UEFI settings (select products only) ..... 63
Downloading Remote HP PC Hardware Diagnostics UEFI ..... 63
Downloading the latest Remote HP PC Hardware Diagnostics UEFI version ..... 63
Downloading Remote HP PC Hardware Diagnostics UEFI by product name or number ..... 64
Customizing Remote HP PC Hardware Diagnostics UEFI settings ..... 64

**9 Using Setup Utility (BIOS) ..... 65**

Starting Setup Utility (BIOS) ..... 65
Updating Setup Utility (BIOS) ..... 65
Determining the BIOS version ..... 65
Preparing for a BIOS update ..... 66
Downloading a BIOS update ..... 66
Installing a BIOS update ..... 67

**10 Specifications ..... 68**

Computer specifications ..... 68
Display specifications ..... 69

**11 Statement of memory volatility ..... 70**

Current BIOS steps ..... 70
Nonvolatile memory usage ..... 72
Questions and answers ..... 73
Using HP Sure Start (select products only) ..... 74

**12 Power cord set requirements ..... 75**

Requirements for all countries ..... 75
Requirements for specific countries and regions ..... 75

**13 Swelling or deformation of notebook battery ..... 78**

Swollen notebook batteries ..... 78
Swollen battery is not a safety issue ..... 78
Discontinue using a swollen battery ..... 78
Replace a swollen battery ..... 78
Minimize battery swelling ..... 78
Adaptive Battery Optimizer (consumer notebooks) ..... 79
HP Battery Health Manager (commercial notebooks) ..... 79

**14 Recycling ..... 80**

**Index ..... 81**

# 1 Product description

This table provides detailed product information.

**NOTE:** For the latest specifications related to your computer, go to http://www.hp.com/support and follow the instructions to find your product. Select **Specifications & Accessories**, select **Product information**, and then select the specifications link.

**Table 1-1 Product components and their descriptions**

| Category | Description |
|---|---|
| **Product name** | **HP ProBook 4 G2iS 14 inch Notebook AI PC** |
| **Processors** | **Intel® Core™ processors** |
| | Intel Core 7 350 |
| | Intel Core 5 320 |
| | Intel Core 5 315 |
| **Graphics** | **Intel graphics** |
| **Display** | **14.0 in (35.6 cm)** |
| | 2.8K (2880 × 1800), OLED + low blue light, DCI-P3 100%, BrightView, UWVA, eDP 1.5 + PSR, 500 nits, 120 Hz (variable rate refresh [VRR]) |
| | • Microsoft® HDR Streaming Capable |
| | • Panel certification (True Black HDR1000; TUV/low blue light + HP Eye Ease) |
| | • Gorilla Glass 3 |
| | • Anti smudge |
| | • 16:10 aspect ratio |
| **Memory** | **LPDDR5X-6400** (single channel, onboard, not accessible or upgradeable) memory in the following configurations:<br>• 32 GB<br>• 16 GB<br>• 12 GB<br>• 8 GB |
| **Primary storage** | **PCIe, Non-Volatile Memory express (NVMe), M.2 2280 solid-state drives (SSDs)** |
| | 1 TB, PCIe-4 × 4 |
| | 512 GB, PCIe-4 × 4 |
| | 256 GB, PCIe-4 × 4 |
| **Audio** | Dual speakers |
| | Poly Studio |
| | DTS:X Ultra |

**Table 1-1 Product components and their descriptions (continued)**

| Category | Description |
|---|---|
| | HP Audio Boost |
| **Video** | **FHD + IR Camera**: USB2, indicator LED, 1 × infrared (IR) LED, f2.0, FHD BSI sensor, WDR/TNR/HDR, MEFOV 88.7° |
| | Dual-array digital microphone with appropriate software: beam forming, echo cancellation, noise suppression |
| | Supports Windows Hello® |
| | 1080p by 30 frames per second |
| **Wireless** | **Integrated wireless module with dual antennas** (M.2 1216) |
| | Intel AX211 Wi-Fi® 6E + Bluetooth® 5.3 |
| | • Bluetooth LE Audio |
| | • BT Audio Offload |
| **Ports** | Audio-out (headphone)/audio-in (microphone) combo jack |
| | USB 3.2 Gen 2 Type-A |
| | USB 3.2 Gen 1 Type-A |
| | USB 3.2 Gen 2 Type-C® (2)<br>• Data transfer<br>• Power Delivery 3.0<br>• HP Sleep & Charge<br>• DisplayPort™ 1.4 out up to 4K @ 60 Hz<br>• HDMI 2.0 out |
| **Keyboard** | **Keyboard with image sensor** |
| | Backlit |
| | Not backlit |
| | Spill resistant |
| | **Touchpad requirements** |
| | Multitouch gestures enabled |
| | Precision touchpad |
| | Modern trackpad gestures |
| | Taps enabled as default |
| **Power requirements** | **Battery** (HP Long Life) |
| | 4 cell, 70 Whr |
| | HP Fast Charge Technology |
| | **AC adapters** (USB-C®) (select products only) |
| | 65 W, GaN, wall mount, halogen free, fixed |
| | 65 W, GaN, wall mount, halogen free, foldable |

**Table 1-1 Product components and their descriptions (continued)**

| Category | Description |
|---|---|
| | 65 W, GaN, wall mount, fixed, 2.0 m (6.6 ft) |
| | **Power cord** (select products only) |
| | Non-standard, black, straight, halogen free, duckhead only |
| **Security** | Supports firmware Trusted Platform Module (fTPM) 2.0 |
| | Microphone mute |
| | Camera privacy cover |
| **Operating system** | Windows® 11 Home 64 |
| | Windows 11 Home 64 Advanced |
| | Windows 11 Home 64 Advanced Single Language |
| | Windows 11 Home 64 Chinese Market CPPP |
| | Windows 11 Home 64 High-end Chinese Market CPPP |
| | Windows 11 Home 64 Plus |
| | Windows 11 Home 64 Plus Single Language |
| | Windows 11 Home 64 Plus Single Language Africa Market PPP |
| | Windows 11 Home 64 Single Language APAC EM PPP |
| | Windows 11 Home 64 Plus Single Language India Market PPP |
| | Windows 11 Home 64 Plus Single Language Indonesia Market PPP |
| | Windows 11 Pro 64 |
| | Windows 11 Pro 64 Chinese Market |
| | Windows 11 Pro 64 StF MSNA Standard |
| **Serviceability** | **End user replaceable parts** |
| | AC adapter |
| | Bottom cover |
| | Battery |

# 2 Getting to know your computer

Your computer features top-rated components. This chapter provides details about your components, where they are located, and how they work.

## Right side

Use this illustration and table to identify the components on the right side of the computer.

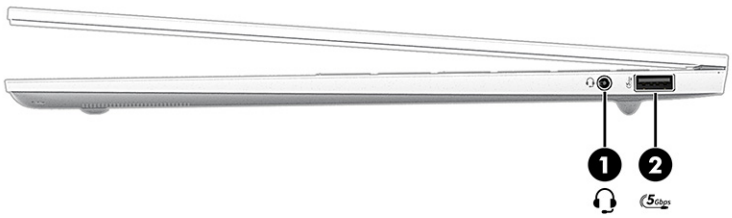


**Table 2-1 Right-side components and their descriptions**

| | Component | Description |
|---|---|---|
| **(1)** | Audio-out (headphone)/Audio-in (microphone) combo jack | Connects optional powered stereo speakers, headphones, earbuds, a headset, or a television audio cable. Also connects an optional headset microphone. This jack does not support optional standalone microphones.<br><br>**WARNING!** To reduce the risk of personal injury, adjust the volume before putting on headphones, earbuds, or a headset. For additional safety information, see the *Regulatory, Safety, and Environmental Notices*.<br><br>To access this guide:<br><br>■ Select the **Search** icon in the taskbar, type `HP Documentation` in the search box, and then select **HP Documentation**.<br><br>**NOTE:** When a device is connected to the jack, the computer speakers are disabled. |
| **(2)** | USB 5 Gbps port | Connects a USB device, provides high-speed data transfer, and (for select products) charges small devices (such as a smartphone) when the computer is on or in sleep mode.<br><br>**NOTE:** Use a standard USB Type-A charging cable or cable adapter (purchased separately) when charging a small external device. |

# Left side

Use this illustration and table to identify the components on the left side of the computer.

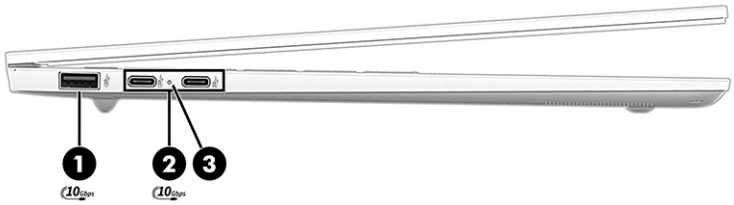


**Table 2-2 Left-side components and their descriptions**

| | | Component | Description |
|---|---|---|---|
| **(1)** | | USB 10 Gbps port | Connects a USB device, provides high-speed data transfer, and (for select products) charges small devices (such as a smartphone) when the computer is on or in sleep mode.<br><br>**NOTE:** Use a standard USB Type-A charging cable or cable adapter (purchased separately) when charging a small external device. |
| **(2)** | | USB Type-C® power connectors and 10 Gbps ports with HP Sleep and Charge and DisplayPort™ output (2) | Connect an AC adapter that has a USB Type-C connector, supplying power to the computer and, if needed, charging the computer battery.<br><br>– and –<br><br>Connect a USB device, provide high-speed data transfer, and charge small devices (such as a smartphone), even when the computer is off.<br><br>**NOTE:** Use a standard USB Type-C charging cable or cable adapter (purchased separately) when charging a small external device.<br><br>– and –<br><br>Connect a display device that has a USB Type-C connector, providing DisplayPort output. |
| **(3)** | | AC adapter and battery light | • White: The AC adapter is connected and the battery is fully charged.<br><br>• Blinking amber: The AC adapter is disconnected and the battery has reached a low battery level.<br><br>• Amber: The AC adapter is connected and the battery is charging.<br><br>• Off: The battery is not charging. |

# Display

The computer display can include essential components such as speakers, antennas, cameras, and microphones.

## Low blue light mode (select products only)

Your computer display is shipped from the factory in low blue light mode for improved eye comfort and safety. Also, blue light mode automatically adjusts blue light emissions when you are using the computer at night or for reading.

⚠ **WARNING!** To reduce the risk of serious injury, read the *Safety & Comfort Guide*. It describes proper workstation setup and proper posture, health, and work habits for computer users. The *Safety & Comfort Guide* also provides important electrical and mechanical safety information. The *Safety & Comfort Guide* is available on the web at http://www.hp.com/ergo.

## Wake-on-voice (select products only)

Use the wake-on-voice feature to wake or interact with your computer quickly.

To access the wake-on-voice settings, follow these steps:

1. Select the **Search** icon in the taskbar, type `Xiaowei` in the search box, and then select **Xiaowei**.
2. When the tool opens, scan the QR code with your mobile device, which takes you to the settings page, where you can select your wake-on-voice features.
3. Follow the on-screen instructions.

**NOTE:** Allow the Xiaowei app to continue running on the computer.

Use this illustration and table to identify components on the display.

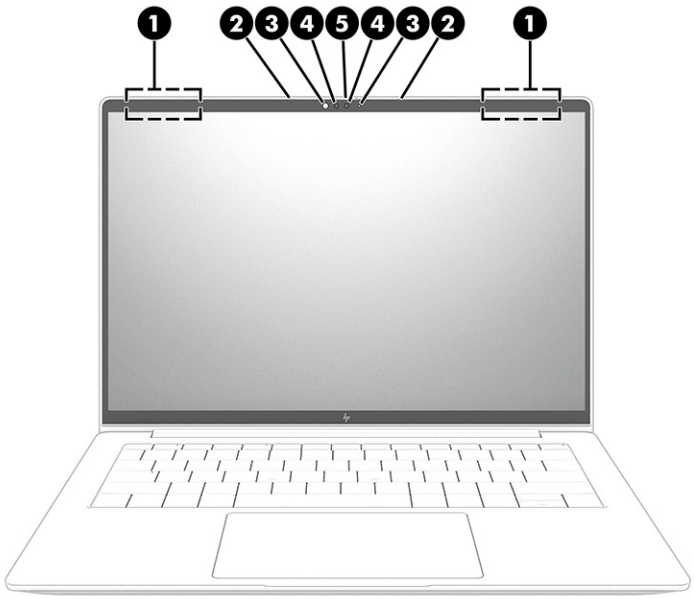


**Table 2-3 Display components and their descriptions**

| | Component | Description |
|---|---|---|
| **(1)** | WLAN antennas* (2) | Send and receive wireless signals to communicate with wireless local area networks (WLANs). |
| **(2)** | Internal microphones (2) | Record sound. |

**Table 2-3 Display components and their descriptions (continued)**

| | Component | Description |
|---|---|---|
| **(3)** | Camera lights (2) | On: One or more cameras are in use. |
| **(4)** | Cameras (2) | Allow you to video chat, record video, and record still images. Some cameras also allow a facial recognition logon to Windows®, instead of a password logon.<br><br>**NOTE:** Camera functions vary depending on the camera hardware and software installed on your product. |
| **(5)** | Camera privacy cover | By default, the camera lens is uncovered, but you can slide the camera privacy cover to block the camera's view. To use the camera, slide the camera privacy cover in the opposite direction to reveal the lens.<br><br>**NOTE:** The camera privacy cover only covers one camera lens at a time, so when one is revealed and ready to use, the other is concealed. |

*The antennas are not visible from the outside of the computer. For optimal transmission, keep the areas immediately around the antennas free from obstructions.

For wireless regulatory notices, see the section of the *Regulatory, Safety, and Environmental Notices* that applies to your country or region.

To access this guide:

- Select the **Search** icon in the taskbar, type `HP Documentation` in the search box, and then select **HP Documentation**.

# Keyboard area

Keyboards can vary by language.

**NOTE:** The keyboard area, including the function keys and (select products only) power key, is disabled in stand, tent, and tablet modes. To enable the keyboard, including the power key, change to the clamshell mode.

## Touchpad settings and components

Learn the touchpad settings and components.

### Touchpad settings

Learn how to adjust touchpad settings.

#### Adjusting touchpad settings

Use these steps to adjust touchpad settings and gestures.

1. Select the **Search** icon in the taskbar, type `touchpad settings` in the search box, and then press enter.
2. Choose a setting.

### Turning on the touchpad

Follow these steps to turn on the touchpad.

1. Select the **Search** icon in the taskbar, type `touchpad settings` in the search box, and then press enter.
2. Using an external mouse, click the **touchpad** button.

   If you are not using an external mouse, press the Tab key repeatedly until the pointer rests on the **touchpad** button. Then press the spacebar to select the button.

## Touchpad components

Use this illustration and table to identify the touchpad components.

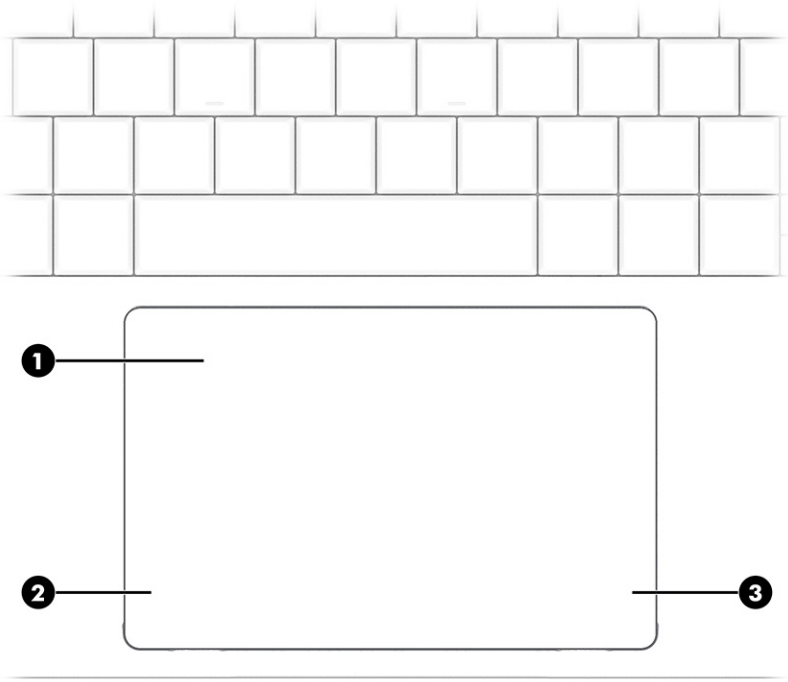


**Table 2-4 Touchpad components and their descriptions**

| | Component | Description |
|---|---|---|
| **(1)** | Touchpad zone | Reads your finger gestures to move the pointer or activate items on the screen. |
| **(2)** | Left touchpad button | Functions like the left button on an external mouse. |
| **(3)** | Right touchpad button | Functions like the right button on an external mouse. |

# Lights

Use this illustration and table to identify the lights on the computer.

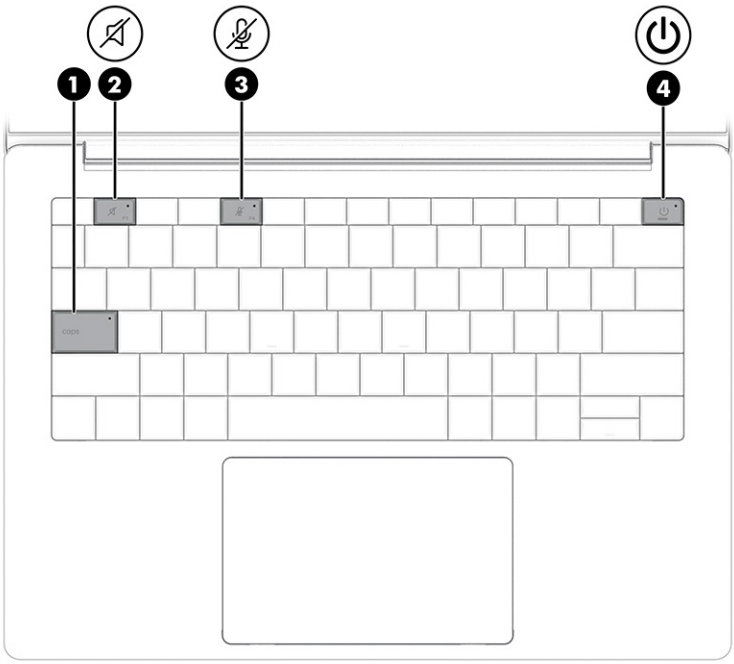


**Table 2-5 Lights and their descriptions**

| | | Component | Description |
|---|---|---|---|
| **(1)** | | Caps lock light | On: Caps lock is on, which switches the key input to all capital letters. |
| **(2)** | | Mute light | • On: Computer sound is off.<br>• Off: Computer sound is on. |
| **(3)** | | Microphone mute light | • On: Microphone is off.<br>• Off: Microphone is on. |
| **(4)** | | Power light | • On: The computer is on.<br>• Blinking (select products only): The computer is in the sleep state, a power-saving state. The computer shuts off power to the display and other unnecessary components.<br>• Off: Depending on your computer model, the computer is off, in hibernation, or in sleep. Hibernation is the power-saving state that uses the least amount of power. |

## Special keys

Use this illustration and table to identify the special keys.

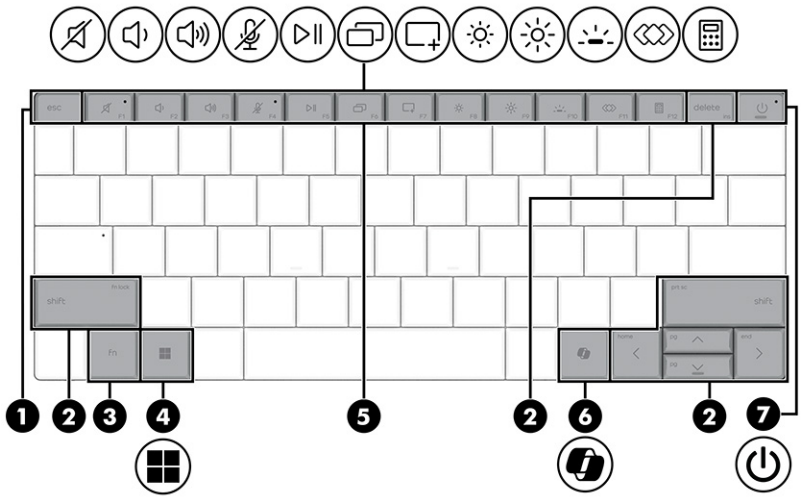


**Table 2-6 Special keys and their descriptions**

| | | Component | Description |
|---|---|---|---|
| **(1)** | | esc key | Displays system information when pressed in combination with the fn key. |
| **(2)** | | Dual action keys | • Main function: Displayed in a larger font size on the key.<br>• Secondary function: Displayed in the corner of the key in a smaller font size. Activate the secondary function by pressing the fn key at the same time.<br>**NOTE:** FN Lock status only affects the behavior of the f1 through f12 function keys. |
| **(3)** | | fn key | Executes specific functions when pressed in combination with another key.<br>**NOTE:** When using combination shortcut keys, the order in which keys are pressed may affect the result. |
| **(4)** | | Windows key | Opens the Start menu.<br>**NOTE:** Pressing the Windows key again will close the Start menu. |
| **(5)** | | Action keys | Execute frequently used system functions as defined by the icon symbols on f1 through f12 function keys. |
| **(6)** | | Windows Copilot key | Opens Windows Copilot (select products only).<br>**NOTE:** Copilot in Windows (select products only) requires Windows 11. Some features require a neural processing unit (NPU). The timing of feature delivery and availability varies by market and device. You must have a Microsoft account to use the Copilot feature. When the Copilot feature is not available, pressing the Copilot key opens the Bing search engine. See http://aka.ms/WindowsAIFeatures. |

**Table 2-6 Special keys and their descriptions (continued)**

| | Component | Description |
|---|---|---|
| **(7)** | Power button | • When the computer is off, press the button briefly to turn on the computer.<br>• When the computer is on, press the button briefly to initiate sleep.<br>• When the computer is in the sleep state, press the button briefly to exit sleep (select products only).<br>• When the computer is in hibernation, press the button briefly to exit hibernation.<br>**IMPORTANT:** Pressing and holding down the power button results in the loss of unsaved information.<br>If the computer has stopped responding and shutdown procedures are ineffective, press and hold the power button down for at least 10 seconds to turn off the computer.<br>To learn more about your power and sleep settings:<br>▪ Right-click the **Power** icon, and then select **Power and sleep settings**. |

# Bottom

Use this illustration and table to identify the bottom components.

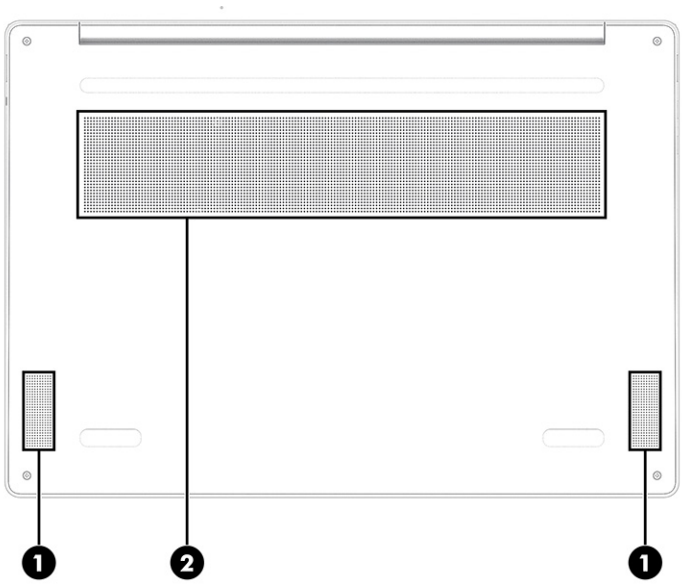


**Table 2-7 Bottom components and their descriptions**

| | Component | Description |
|---|---|---|
| **(1)** | Speakers (2) | Produce sound. |

**Table 2-7 Bottom components and their descriptions (continued)**

| | Component | Description |
|---|---|---|
| **(2)** | Vent | Enables airflow to cool internal components.<br><br>**NOTE:** The computer fan starts up automatically to cool internal components and prevent overheating. It is normal for the internal fan to cycle on and off during routine operation. |

# Labels

The labels affixed to the computer provide information that you might need when you troubleshoot system problems or travel internationally with the computer. Labels can be in paper form or imprinted on the product.

**IMPORTANT:** Check the following locations for the labels described in this section: the bottom of the computer, inside the battery bay, under the service door, on the back of the display, or on the bottom of a tablet kickstand.

- Service label—Provides important information to identify your computer. When contacting support, you might be asked for the serial number, the product number, or the model number. Locate this information before you contact support.

  Your service label will resemble the following example:




**Table 2-8 Service label components**

| | Component |
|---|---|
| **(1)** | Serial number |
| **(2)** | Product ID |
| **(3)** | HP product name and model number |

- Regulatory labels—Provide regulatory information about the computer.
- Wireless certification labels—Provide information about optional wireless devices and the approval markings for the countries or regions in which the devices have been approved for use.

# 3 Illustrated parts catalog

Use this chapter to determine the spare parts that are available for the computer.

## Computer major components

Use this illustration and table to identify the computer major components.

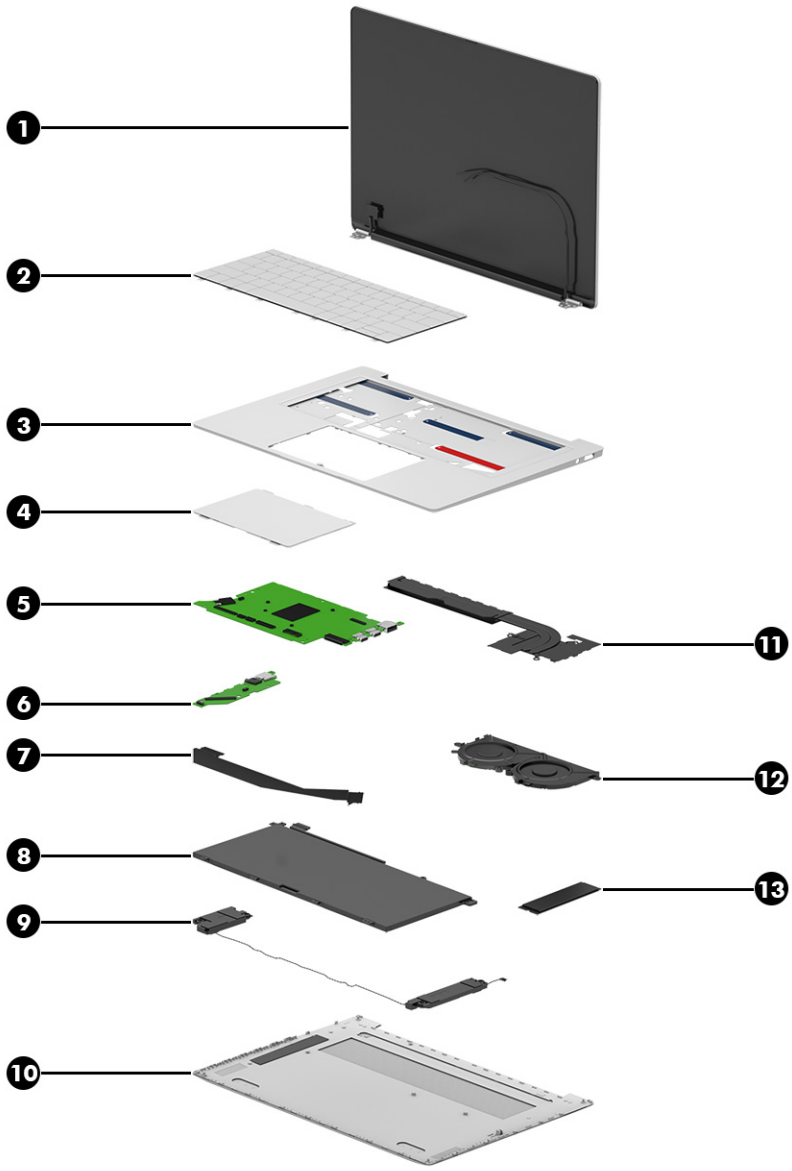

**Table 3-1 Computer major component descriptions and part numbers**

| Item | Component | CSR category* | Spare part number |
|---|---|---|---|
| (1) | **Display assembly**<br><br>**NOTE:** Display assemblies are offered as spare parts only at a subcomponent level. | | not available as a spare part |
| (2) | **Keyboard** | | |
| | Darker atmospheric blue | N | Q41695-xx1 |
| | Darker eclipse gray | N | Q41696-xx1 |
| | Soft gray | N | Q41697-xx1 |
| (3) | **Top cover** | | |
| | Atmospheric blue | N | Q39945-001 |
| | Eclipse gray | N | Q39946-001 |
| | Mist silver | N | Q39947-001 |
| (4) | **Touchpad** (includes cable) | | |
| | Atmospheric blue | N | Q39948-001 |
| | Eclipse gray | N | Q39949-001 |
| | Mist silver | N | Q39950-001 |
| (5) | **System board** (includes integrated processor and system memory) | | |
| | Intel Core 7 350 and 32 GB of system memory | N | Q39937-601 |
| | Intel Core 7 350 and 16 GB of system memory | N | Q39936-601 |
| | Intel Core 5 320 and 32 GB of system memory | N | Q39934-601 |
| | Intel Core 5 320 and 16 GB of system memory | N | Q39933-601 |
| | Intel Core 5 320 and 8 GB of system memory | N | Q39935-601 |
| | Intel Core 5 315 and 16 GB of system memory | N | Q39931-601 |
| | Intel Core 5 315 and 8 GB of system memory | N | Q39932-601 |
| (6) | **I/O board** (includes cable) | N | Q39951-001 |
| (7) | **I/O board cable** (included in the Cable Kit) | N | Q35009-001 |
| (8) | **Battery** (includes revive kit) | A | P55092-001 |
| (9) | **Speakers** (left and right) | N | Q35011-001 |
| (10) | **Bottom cover** | | |
| | Atmospheric blue | A | Q39942-001 |
| | Eclipse gray | A | Q39943-001 |
| | Mist silver | A | Q39944-001 |
| (11) | **Heat sink** | N | Q35013-001 |
| (12) | **Fans** | N | Q35012-001 |
| (13) | **SSD** (PCIe-4 × 4) | | |

**Table 3-1 Computer major component descriptions and part numbers (continued)**

| Item | Component | CSR category* | Spare part number |
|---|---|---|---|
| | 1 TB | N | Q44439-001 |
| | 512 GB | N | Q44440-001 |
| | 256 GB | N | Q44441-001 |

**Table 3-2 CSR part categories***

| Category | Description | Replacement responsibility |
|---|---|---|
| CSR A | Self-service parts | Customers can replace these easily replaceable parts. Replacement by trained technicians might incur additional cost. |
| CSR B/C | Optional self-service parts | Skilled customers can replace these parts. Warranty replacement available via trained technicians. |
| CSR N | Non-self-service parts | Only trained service technicians should replace these complex parts. |

# Display assembly subcomponents

Use this illustration and table to identify the display assembly subcomponents.

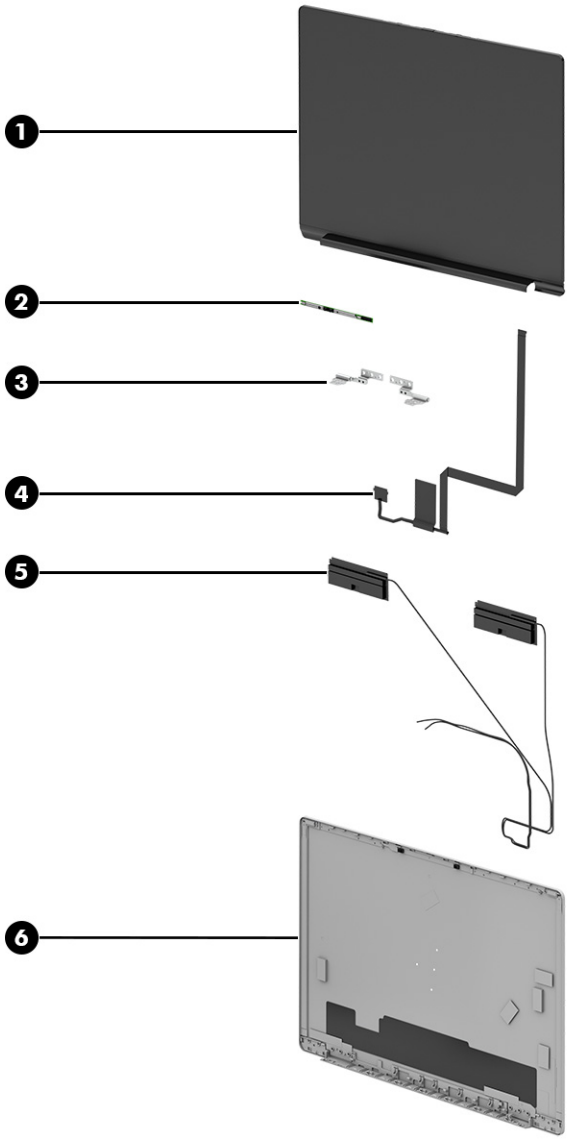


**Table 3-3 Display component descriptions and part numbers**

| Item | Component | Spare part number |
|---|---|---|
| **(1)** | **Display panel** (includes cable) | Q35001-001 |
| **(2)** | **Camera module** (includes cable, foil, and display panel tape) | Q35026-001 |
| **(3)** | **Hinges** (includes display panel tape) | Q35027-001 |
| **(4)** | **Display/camera cable** (includes foil and display panel tape) | Q35008-001 |
| **(5)** | **Wireless antennas** (included in the Cable Kit) | Q35009-001 |
| **(6)** | **Display back cover** (includes wireless antennas) | |
| | Atmospheric blue | Q39938-001 |
| | Eclipse gray | Q39939-001 |

**Table 3-3 Display component descriptions and part numbers (continued)**

| Item | Component | Spare part number |
|---|---|---|
| | Mist silver | Q39940-001 |

# Miscellaneous parts

Use this table to identify the miscellaneous parts.

**Table 3-4 Miscellaneous part descriptions and part numbers**

| Component | Spare part number |
|---|---|
| **Screw and Thermal Pad Kit** (includes screws and touchpad protective tape) | Q35010-001 |
| **Cable Kit** (includes I/O board cable, touchpad cable, battery cable, wireless antennas and cables, and display tape) | Q35009-001 |
| **USB-C-to-VGA adapter** | 831751-001 |
| **USB-C-to-USB-A hub** | 916838-001 |
| **USB-C-to-HDMI 2.0 adapter** | 935325-001 |
| **USB-C-to-DisplayPort adapter** | N81435-001 |
| **USB 3.0-to-gigabit RJ-45 adapter** | M95984-001 |
| **USB-C-to-RJ-45 adapter** | M95985-001 |
| **Universal USB-C multiport hub** | M96882-001 |
| **USB-C multiport travel hub** | N60372-001 |
| **Portable USB-C-to-HDMI hub** | P52720-001 |
| **HP Prelude 15.6 backpack** | M16116-001 |
| **HP Prelude 15.6 top load case** | M16117-001 |
| **HP Everyday 14 OGR Laptop BAG** | P04344-001 |
| **HP Everyday 14 OGR Backpack** | P04346-001 |
| **HP ABL 13-14 laptop sleeve** | P64772-001 |
| **HP USB mouse** | L95713-001 |
| **HP 125 wired mouse** | M27884-001 |
| **HP 128 wired laser mouse** | M27885-001 |
| **HP 435 wireless mouse** | M62277-001 |
| **HP 235 wireless 3-button mouse** | M86086-001 |
| **HP 510/515 rechargeable wireless mouse** | N86885-001 |
| **HP 320K wired keyboard** | P24877-001 |
| **HP USB external DVD-RW drive** | 747080-001 |
| **AC adapters** | |
| 65 W, USB-C, GaN, 2 pin, wall mount, 2.0 m (6.6 ft), fixed | P58629-001 |
| 65 W, USB-C, GaN, 2 pin, wall mount, 2.0 m (6.6 ft), fixed, for use in India | P73759-001 |

**Table 3-4 Miscellaneous part descriptions and part numbers (continued)**

| Component | Spare part number |
|---|---|
| 65 W, USB-C, GaN, 2 pin, wall mount, 2.0 m (6.6 ft), foldable | P58630-001 |
| 65 W, USB-C, GaN, 2 pin, wall mount, 2 pin | P68491-001 |
| **Duckhead power cord** (non-standard, halogen free) | |
| Argentina | P57788-001 |
| Australia | P57784-001 |
| Brazil | P57789-001 |
| Europe | P57782-001 |
| India | P57790-001 |
| People's Republic of China (PRC) | P57787-001 |
| South Korea | P57785-001 |
| Thailand | P57786-001 |
| United Kingdom | P57783-001 |

# 4 Removal and replacement procedures preliminary requirements

Use this information to properly prepare to disassemble and reassemble the computer.

## Tools required

You need the following tools to complete the removal and replacement procedures:

- Nonconductive, nonmarking pry tool
- Magnetic Phillips P2 screwdriver
- Tweezers
- Suction cups

## Service considerations

The following sections include some of the considerations that you must keep in mind during disassembly and assembly procedures.

**NOTE:** As you remove each subassembly from the computer, place the subassembly and all accompanying screws away from the work area to prevent damage.

### Plastic parts

Using excessive force during disassembly and reassembly can damage plastic parts.

### Cables and connectors

Handle cables with extreme care to avoid damage.

**IMPORTANT:** When servicing the computer, be sure that cables are placed in their proper locations during the reassembly process. Improper cable placement can damage the computer.

Apply only the tension required to unseat or seat the cables during removal and insertion. Handle cables by the connector whenever possible. In all cases, avoid bending, twisting, or tearing cables. Be sure that cables are routed so that they cannot be caught or snagged as you remove or replace parts. Handle flex cables with extreme care; these cables tear easily.

### Drive handling

Note the following guidelines when handling drives.

**IMPORTANT:** Drives are fragile components. Handle them with care. To prevent damage to the computer, damage to a drive, or loss of information, observe these precautions:

- Before removing or inserting a hard drive, shut down the computer. If you are unsure whether the computer is off or in hibernation or sleep mode, turn the computer on, and then shut it down through the operating system.
- Before handling a drive, be sure that you are discharged of static electricity. While handling a drive, avoid touching the connector.
- Handle drives on surfaces covered with at least 2.54 cm (1 inch) of shock-proof foam.
- Avoid dropping drives from any height onto any surface.
- After removing a hard drive or an optical drive, place it in a static-proof bag.
- Avoid exposing an internal hard drive to products that have magnetic fields, such as monitors or speakers.
- Avoid exposing a drive to temperature extremes or liquids.
- If a drive must be mailed, place the drive in a bubble pack mailer or other suitable form of protective packaging, and label the package "FRAGILE."

# Electrostatic discharge information

A sudden discharge of static electricity from your finger or other conductor can destroy static-sensitive devices or microcircuitry. Often the spark is neither felt nor heard, but damage occurs. An electronic device exposed to electrostatic discharge (ESD) might not appear to be affected at all and can work perfectly throughout a normal cycle. The device might function normally for a while, but it has been degraded in the internal layers, reducing its life expectancy.

Networks built into many integrated circuits provide some protection, but in many cases, the discharge contains enough power to alter device parameters or melt silicon junctions.

**IMPORTANT:** To prevent damage to the device when you remove or install internal components, observe these precautions:

- Keep components in their electrostatic-safe containers until you are ready to install them.
- Before touching an electronic component, discharge static electricity by using the guidelines described in Personal grounding methods and equipment on page 21.
- Avoid touching pins, leads, and circuitry. Handle electronic components as little as possible.
- If you remove a component, place it in an electrostatic-safe container.

## Generating static electricity

Follow these static electricity guidelines.

- Different activities generate different amounts of static electricity.
- Static electricity increases as humidity decreases.

**Table 4-1 Static electricity occurrence based on activity and humidity**

| Event | 55% relative humidity | 40% relative humidity | 10% relative humidity |
|---|---|---|---|
| Walking across carpet | 7500 V | 15,000 V | 35,000 V |
| Walking across vinyl floor | 3000 V | 5000 V | 12,000 V |
| Motions of bench worker | 400 V | 800 V | 6000 V |
| Removing dual in-line packages (DIPs) from plastic tube | 400 V | 700 V | 2000 V |
| Removing DIPs from vinyl tray | 2000 V | 4000 V | 11,500 V |
| Removing DIPs from polystyrene foam | 3500 V | 5000 V | 14,500 V |
| Removing bubble pack from PCB (printed circuit board) | 7000 V | 20,000 V | 26,500 V |
| Packing PCBs in foam-lined box | 5000 V | 11,000 V | 21,000 V |

**NOTE:** Multiple electric components can be packaged together in plastic tubes, trays, or polystyrene foam.

**NOTE:** As little as 700 V of static electricity can degrade a product.

## Preventing electrostatic damage to equipment

Many electronic components are sensitive to ESD. Circuitry design and structure determine the degree of sensitivity.

The following packaging and grounding precautions are necessary to prevent static electricity damage to electronic components:

- To avoid hand contact, transport products in static-safe containers such as tubes, bags, or boxes.
- Protect all electrostatic parts and assemblies with conductive or approved containers or packaging.
- Keep electrostatic-sensitive parts in their containers until they arrive at static-free stations.
- Place items on a grounded surface before removing them from their container.
- Always be properly grounded when touching a sensitive component or assembly.
- Avoid contact with pins, leads, or circuitry.
- Place reusable electrostatic-sensitive parts from assemblies in protective packaging or conductive foam.

## Personal grounding methods and equipment

Using certain equipment can prevent static electricity damage to electronic components.

- **Wrist straps** are flexible straps with a maximum of 1 MΩ ±10% resistance in the ground cords. To provide proper ground, wear a strap snug against bare skin. Verify that the ground cord is connected and fits snugly into the banana plug connector on the grounding mat or workstation.
- You can use **heel straps, toe straps, and boot straps** at standing workstations. These straps are compatible with most types of shoes or boots. On conductive floors or dissipative floor mats, use them on both feet with a maximum of 1 MΩ ±10% resistance between the operator and ground.

**Table 4-2 Static shielding protection levels**

| Method | Voltage |
|---|---|
| Antistatic plastic | 1500 |
| Carbon-loaded plastic | 7500 |
| Metalized laminate | 15,000 |

## Grounding the work area

To prevent static damage at the work area, follow these precautions.

- Cover the work surface with approved static-dissipative material.
- Use a wrist strap connected to a properly grounded work surface and use properly grounded tools and equipment.
- Use static-dissipative mats, foot straps, or air ionizers to give added protection.
- Handle electrostatic-sensitive components, parts, and assemblies by the case or PCB laminate. Handle them only at static-free work areas.
- Turn off power and input signals before inserting and removing connectors or test equipment.
- Use fixtures made of static-safe materials when fixtures must directly contact dissipative surfaces.
- Keep the work area free of nonconductive materials, such as ordinary plastic assembly aids and polystyrene foam.
- Use conductive field service tools, such as cutters, screwdrivers, and vacuums.
- Avoid contact with pins, leads, or circuitry.

## Recommended materials and equipment

HP recommends certain materials and equipment to prevent static electricity.

- Antistatic tape
- Antistatic smocks, aprons, or sleeve protectors
- Conductive bins and other assembly or soldering aids
- Conductive foam
- Conductive tabletop workstations with ground cord of 1 MΩ ±10% resistance
- Static-dissipative table or floor mats with hard tie to ground
- Field service kits
- Static awareness labels
- Wrist straps and footwear straps providing 1 MΩ ±10% resistance
- Material handling packages
- Conductive plastic bags

- Conductive plastic tubes
- Conductive tote boxes
- Opaque shielding bags
- Transparent metallized shielding bags
- Transparent shielding tubes

# Cleaning your computer

Cleaning your computer regularly removes dirt and debris so that your device continues to operate at its best. Use the following information to safely clean the external surfaces of your computer.

## Enabling HP Easy Clean (select products only)

HP Easy Clean helps you to avoid accidental input while you clean the computer surfaces. This software disables devices such as the keyboard, touch screen, and touchpad for a preset amount of time so that you can clean all computer surfaces.

1. Start HP Easy Clean in one of the following ways:
   - Select the **Start** menu, and then select **HP Easy Clean**.
   - Select the **HP Easy Clean** icon in the taskbar.
   - Select **Start**, and then select the **HP Easy Clean** tile.
2. Now that your device is disabled for a short period, see Removing dirt and debris from your computer on page 23 for the recommended steps to clean the high-touch, external surfaces on your computer. After you remove the dirt and debris, you can also clean the surfaces with a disinfectant. See Cleaning your computer with a disinfectant on page 24 for guidelines to help prevent the spread of harmful bacteria and viruses.

## Removing dirt and debris from your computer

Here are the recommended steps to clean dirt and debris from your computer.

For computers with wood veneer, see Caring for wood veneer (select products only) on page 25.

1. Wear disposable gloves made of latex (or nitrile gloves, if you are latex-sensitive) when cleaning the surfaces.
2. Turn off your device and unplug the power cord and other connected external devices. Remove any installed batteries from items such as wireless keyboards.

**CAUTION:** To prevent electric shock or damage to components, never clean a product while it is turned on or plugged in.

3. Moisten a microfiber cloth with water. The cloth should be moist, but not dripping wet.

**IMPORTANT:** To avoid damaging the surface, avoid abrasive cloths, towels, and paper towels.

4. Wipe the exterior of the product gently with the moistened cloth.

**IMPORTANT:** Keep liquids away from the product. Avoid getting moisture in any openings. If liquid makes its way inside your HP product, it can cause damage to the product. Do not spray liquids directly on the product. Do not use aerosol sprays, solvents, abrasives, or cleaners containing hydrogen peroxide or bleach that might damage the finish.

5. Start with the display (if applicable). Wipe carefully in one direction, and move from the top of the display to the bottom. Finish with any flexible cables, like power cord, keyboard cable, and USB cables.

6. Be sure that surfaces have completely air-dried before turning the device on after cleaning.

7. Discard the gloves after each cleaning. Clean your hands immediately after you remove the gloves.

See Cleaning your computer with a disinfectant on page 24 for recommended steps to clean the high-touch, external surfaces on your computer to help prevent the spread of harmful bacteria and viruses.

## Cleaning your computer with a disinfectant

The World Health Organization (WHO) recommends cleaning surfaces, followed by disinfection, as a best practice for preventing the spread of viral respiratory illnesses and harmful bacteria.

After cleaning the external surfaces of your computer using the steps in Removing dirt and debris from your computer on page 23, Caring for wood veneer (select products only) on page 25, or both, you might also choose to clean the surfaces with a disinfectant. A disinfectant that is within HP's cleaning guidelines is an alcohol solution consisting of 70% isopropyl alcohol and 30% water. This solution is also known as rubbing alcohol and is sold in most stores.

Follow these steps when disinfecting high-touch, external surfaces on your computer:

1. Wear disposable gloves made of latex (or nitrile gloves, if you are latex-sensitive) when cleaning the surfaces.

2. Turn off your device and unplug the power cord and other connected external devices. Remove any installed batteries from items such as wireless keyboards.

**CAUTION:** To prevent electric shock or damage to components, never clean a product while it is turned on or plugged in.

3. Moisten a microfiber cloth with a mixture of 70% isopropyl alcohol and 30% water. The cloth should be moist, but not dripping wet.

**CAUTION:** Do not use any of the following chemicals or any solutions that contain them, including spray-based surface cleaners: bleach, peroxides (including hydrogen peroxide), acetone, ammonia, ethyl alcohol, methylene chloride, or any petroleum-based materials, such as gasoline, paint thinner, benzene, or toluene.

**IMPORTANT:** To avoid damaging the surface, avoid abrasive cloths, towels, and paper towels.

4. Wipe the exterior of the product gently with the moistened cloth.

**IMPORTANT:** Keep liquids away from the product. Avoid getting moisture in any openings. If liquid makes its way inside your HP product, it can cause damage to the product. Do not spray liquids directly on the product. Do not use aerosol sprays, solvents, abrasives, or cleaners containing hydrogen peroxide or bleach that might damage the finish.

5. Start with the display (if applicable). Wipe carefully in one direction, and move from the top of the display to the bottom. Finish with any flexible cables, like power cord, keyboard cable, and USB cables.
6. Be sure that surfaces have completely air-dried before turning the device on after cleaning.
7. Discard the gloves after each cleaning. Clean your hands immediately after you remove the gloves.

## Caring for wood veneer (select products only)

Your product might feature high-quality wood veneer. As with all natural wood products, proper care is important for best results over the life of the product. Because of the nature of natural wood, you might see unique variations in the grain pattern or subtle variations in color, which are normal.

- Clean the wood with a dry, static-free microfiber cloth or chamois.
- Avoid cleaning products containing substances such as ammonia, methylene chloride, acetone, turpentine, or other petroleum-based solvents.
- Do not expose the wood to sun or moisture for long periods of time.
- If the wood becomes wet, dry it by dabbing with an absorbent, lint-free cloth.
- Avoid contact with any substance that might dye or discolor the wood.
- Avoid contact with sharp objects or rough surfaces that might scratch the wood.

See Removing dirt and debris from your computer on page 23 for the recommended steps to clean the high-touch, external surfaces on your computer. After you remove the dirt and debris, you can also clean the surfaces with a disinfectant. See Cleaning your computer with a disinfectant on page 24 for sanitizing guidelines to help prevent the spread of harmful bacteria and viruses.

# Packaging and transporting guidelines

Follow these grounding guidelines when packaging and transporting equipment.

- To avoid hand contact, transport products in static-safe tubes, bags, or boxes.
- Protect ESD-sensitive parts and assemblies with conductive or approved containers or packaging.
- Keep ESD-sensitive parts in their containers until the parts arrive at static-free workstations.
- Place items on a grounded surface before removing items from their containers.
- Always be properly grounded when touching a component or assembly.
- Store reusable ESD-sensitive parts from assemblies in protective packaging or nonconductive foam.
- Use transporters and conveyors made of antistatic belts and roller bushings. Be sure that mechanized equipment used for moving materials is wired to ground and that proper materials are selected to avoid static charging. When grounding is not possible, use an ionizer to dissipate electric charges.

# Accessing support information

Use this information to find the HP support that you need.

**Table 4-3 Support information locations**

| Service consideration | Path to access information |
|---|---|
| Records of reported failure incidents stored on the computer | **Windows®:**<br><br>Pre-operating system failures are logged in the BIOS Event Log. To view the BIOS Event Log:<br><br>1. Press the power button.<br>2. Immediately and repeatedly press esc when the power button light turns white.<br><br>**NOTE:** If you do not press esc at the appropriate time, you must restart the computer and again repeatedly press esc when the power button light turns white to access the utility.<br><br>3. Press f10 to enter the BIOS setup.<br>4. Complete one of these tasks:<br><br>• (On commercial products) Under the **Main** tab, select **BIOS event log**, and then select **View BIOS Event Log**.<br><br>• (On consumer products) Under the **Main** tab, select **System Log**.<br><br>Post-operating system failures are logged in the Event Viewer.<br><br>1. Turn on the computer and allow the operating system to open.<br>2. Select the search icon in the taskbar.<br>3. Type `Event Viewer`, and then press enter.<br>4. Select the log from the left panel. Details display in the right panel.<br><br>**ChromeOS™:**<br><br>1. Go to support.google.com/chrome.<br>2. Search `collect Chrome device logs`. |
| Technical bulletins and alerts | To find technical bulletins, alerts, guides, and whitepapers:<br><br>1. Go to www.hp.com/support.<br>2. Follow the instructions to find your product.<br>3. Select **Bulletins and Alerts** to view technical bulletins. |
| Repair professionals | To locate repair professionals:<br><br>1. Go to www.hp.com.<br>2. Select **Authorized service providers**.<br>3. Select your location. |
| Component and diagnosis information, failure detection, and required action | To locate diagnosis information and actions:<br><br>1. Go to http://www.hp.com/go/techcenter/pcdiags.<br>2. Select the issue you want to diagnose. |

# 5 Removal and replacement procedures for Customer Self-Repair parts

This chapter provides removal and replacement procedures for Customer Self-Repair parts.

**NOTE:** The Customer Self-Repair program is not available in all locations. Installing a part that is not supported by the Customer Self-Repair program can void your warranty. Check your warranty to determine whether Customer Self-Repair is supported in your location.

**NOTE:** The HP Support YouTube Channel (in English) has videos that provide step-by-step removal and replacement instructions for many common parts and models.

## Component replacement procedures

Use these procedures to remove and replace computer components.

**NOTE:** Details about your computer, including model, serial number, product key, and length of warranty, are on the service tag at the bottom of your computer.

**NOTE:** HP continually improves and changes product parts. For complete and current information about supported parts for your computer, go to https://partsurfer.hp.com/, select your country or region, and then follow the on-screen instructions.

Make special note of each screw size and location during removal and replacement.

### Preparation for disassembly

Use these procedures to remove and replace computer components.

For initial safety procedures, see Removal and replacement procedures preliminary requirements on page 19.

1. Turn off the computer. If you are unsure whether the computer is off or in hibernation or sleep mode, turn the computer on, and then shut it down through the operating system.
2. Disconnect power from the computer by unplugging the power cord from the computer.
3. Disconnect all external devices from the computer.

### Bottom cover

Use this procedure to remove the bottom cover.

**Table 5-1 Bottom cover descriptions and part numbers**

| Description | Spare part number |
|---|---|
| Atmospheric blue | Q39942-001 |
| Eclipse gray | Q39943-001 |
| Mist silver | Q39944-001 |

Before removing the bottom cover, prepare the computer for disassembly (see Preparation for disassembly on page 27).

Remove the bottom cover:

1. Position the computer upside down.
2. Loosen the bottom two captive Phillips screws **(1)** on the bottom cover.
3. Loosen the top two captive Phillips screws **(2)** on the bottom cover.

**NOTE:** The bottom cover should pop up slightly when you loosen the bottom screws **(1)**.

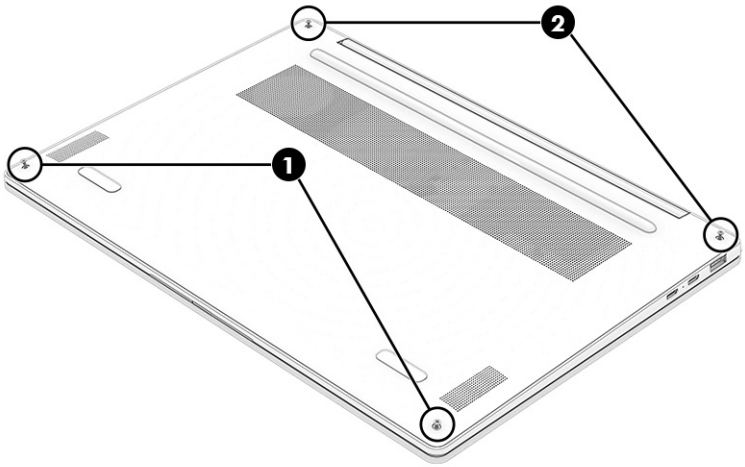


4. Insert a tool **(1)** into the seam at the bottom right of the bottom cover.
5. Pull the tool along the seams **(2)** on all sides of the bottom cover to release it.
6. Remove the cover **(3)** from the computer.

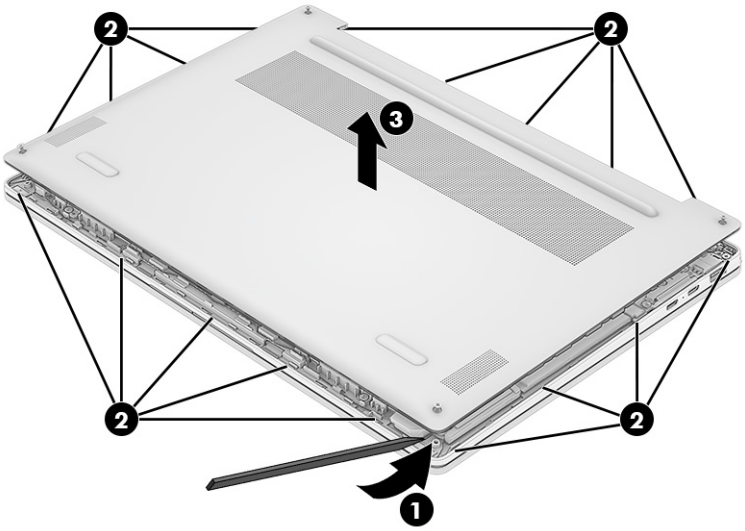

Reverse this procedure to install the bottom cover.

When replacing the bottom cover, be sure the thermal pad is installed on the inside of the cover. If you installed a new cover, remove the plastic film from the thermal pad.

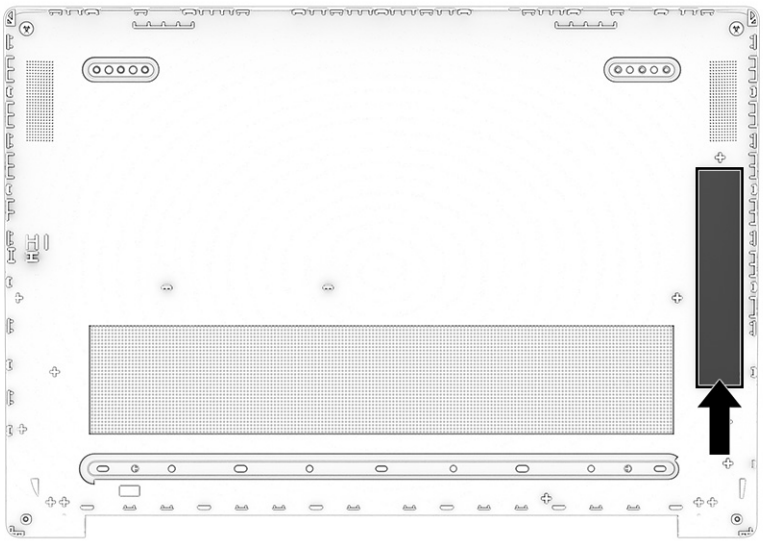

When replacing the bottom cover, remove the Feature Byte label from the inside of the old bottom cover and place it on the inside of the new bottom cover. Be sure to keep this label with the computer, because the label is required for any future repairs.

You can locate product labels:

- Laser etched on the old bottom cover.
- In HP System Information by pressing fn + esc when you turn on the computer.

**NOTE: Bottom cover appearance might vary.**

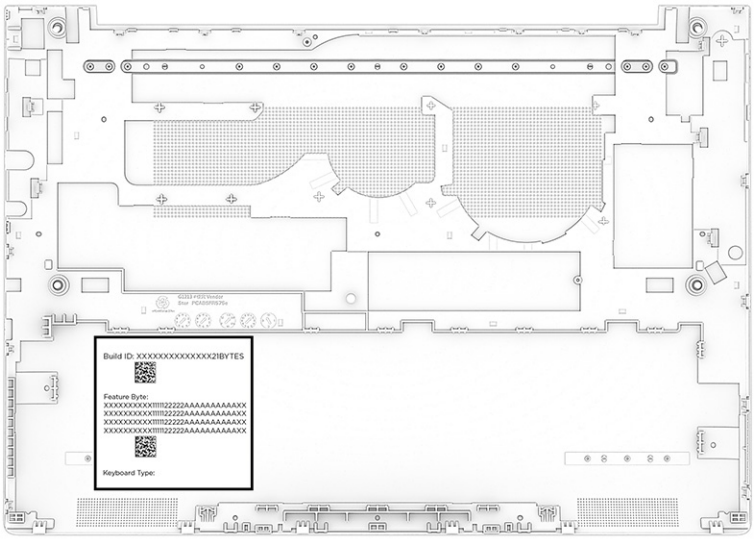

Hand write the product information onto the label of the new bottom cover. Use a ballpoint pen or marker to avoid smudging.

**Example of label information**




**New bottom cover label location**

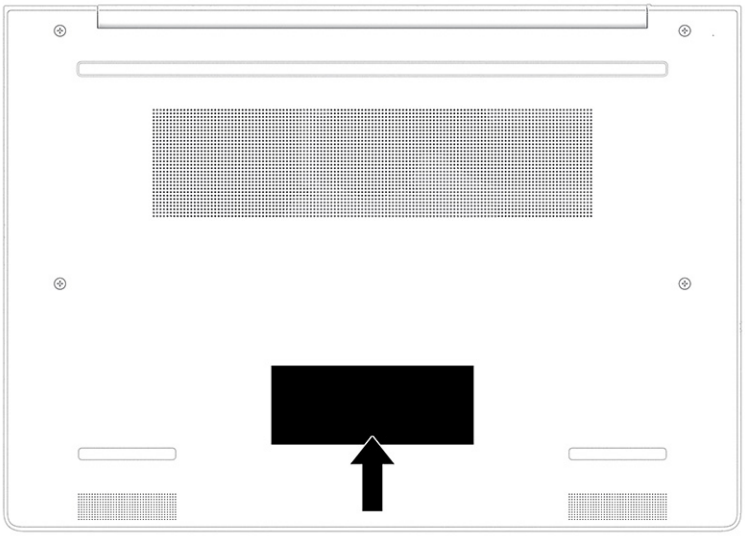

# Battery

The battery removal procedure differs depending on whether you are removing and replacing the existing battery or installing a new battery. To install a new battery, you must use a revive kit.

- To remove and replace the existing battery, see Removing and reinstalling the same battery on page 30.
- To install a new battery, see Installing a new battery on page 32.

## Removing and reinstalling the same battery

Use this procedure to remove the battery and reinstall it.

⚠ **WARNING!** To avoid personal injury and damage to the product:

- Do *not* puncture, twist, or crack the battery.
- Do *not* cause an external puncture or rupture to the battery, which can cause a short inside the battery that can result in battery thermal runaway.

- Do *not* handle or touch the battery enclosure with sharp objects such as tweezers or pliers, which might puncture the battery.
- Do *not* compress or squeeze the battery case with tools or heavy objects stacked on top of the case. These actions can apply undue force on the battery.
- Do *not* touch the connectors with any metallic surface or object, such as metal tools, screws, or coins, which can cause shorting across the connectors.

For additional battery information, see the *Regulatory, Safety, and Environmental Notices*. To access this guide, select the **Search** icon in the taskbar, type `HP Documentation` in the search box, and then select **HP Documentation**.

Before removing the battery, follow these steps:

1. Prepare the computer for disassembly (see Preparation for disassembly on page 27).
2. Remove the bottom cover (see Bottom cover on page 27).

⚠ **WARNING!** To reduce potential safety issues, use only the user-replaceable battery provided with the computer, a replacement battery provided by HP, or a compatible battery purchased from HP.

**IMPORTANT:** Removing a battery that is the sole power source for the computer can cause loss of information. To prevent loss of information, save your work or shut down the computer through Windows before you remove the battery.

Remove the battery:

1. Disconnect the battery cable **(1)** from the system board.
2. Remove the five Phillips M2.0 × 3.0 screws **(2)** that secure the battery to the computer.
3. Remove the small bracket **(3)** from the upper-right corner of the battery.
4. Remove the battery **(4)** from the computer.

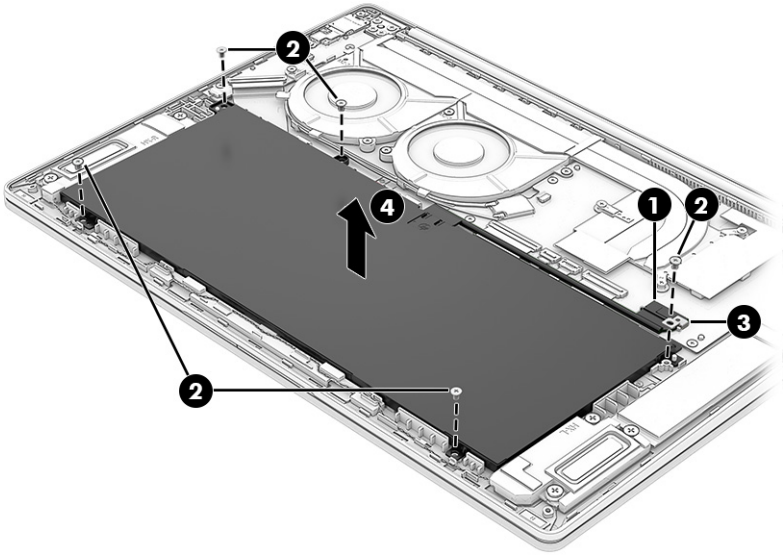


Reverse this procedure to install the battery.

When installing the battery, be sure to install the bracket in the correct orientation.

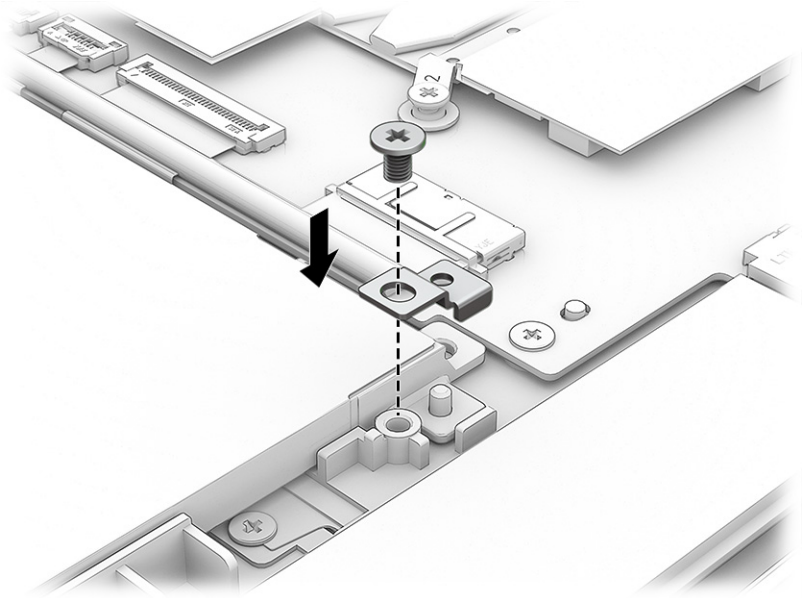

**NOTE:** When replacing the battery, be sure to completely reassemble the computer and plug in the AC adapter before turning the computer on.

## Installing a new battery

Use this procedure to install a battery. You must use a revive kit to remove the old battery and install a new one. The revive kit includes an empty containment tray and a containment tray with a battery preinstalled.

**Table 5-2 Battery description and part number**

| Description | Spare part number |
|---|---|
| Battery (includes revive kit) | P55092-001 |

Before starting this replacement procedure:

- Ensure other individuals are sufficiently clear of your workspace.
- Ensure your workspace is clear of any flammable material such as paper or oils.
- Locate the nearest ABC dry chemical fire-extinguisher for use in an emergency.

**WARNING!** This procedure requires removing the battery or disconnecting the battery cable. Use care to avoid bending, twisting, or puncturing the battery regardless of its condition. Failure to follow this replacement guide or to use HP recommended tools might damage the system and/or cause a safety hazard.

- Do *not* remove the battery from the containment tray.
- Do *not* handle or touch the battery enclosure with sharp objects such as tweezers or pliers, which might puncture the battery.
- Do *not* touch the connectors with any metallic surface or object, such as metal tools, screws, or coins, which can cause shorting across the connectors.

Should a part become stuck or difficult to remove when opening a unit where a swollen battery is suspected, or if the battery becomes stuck in the unit, stop, and contact HP Support for assistance. Do not try to remove a battery by force.

**NOTE:** Screw locations, latch locations, and internal components might vary.

Before removing the battery, follow these steps:

1. Prepare the computer for disassembly (see Preparation for disassembly on page 27).
2. Remove the bottom cover (see Bottom cover on page 27).

**WARNING!** To reduce potential safety issues, use only the user-replaceable battery provided with the computer, a replacement battery provided by HP, or a compatible battery purchased from HP.

**IMPORTANT:** Removing a battery that is the sole power source for the computer can cause loss of information. To prevent loss of information, save your work or shut down the computer through Windows before you remove the battery.

1. Remove the battery using the revive kit:
   a. Disconnect the battery cable from the system board. The connector location might vary.

      **NOTE:** You can disconnect the cable from the battery. The battery spare part kit does not come with the battery cable, so be sure to use the old battery cable or order a new battery cable when replacing the battery.

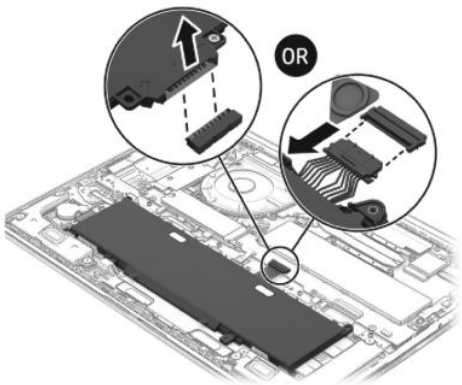

b. Open the empty battery containment tray.



c. Remove the paper backing layer from the adhesive on the tray.

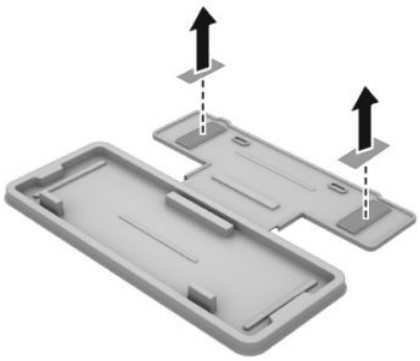

d. Turn the tray **(1)** over so that the adhesive is facing down.

e. Place the tray **(2)** centered on the battery.

f. Press down on the indentations on the tray **(3)** to adhere it to the battery.

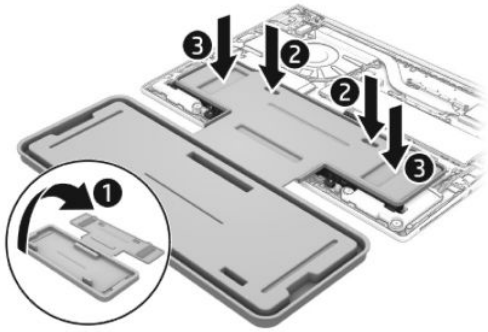

g. Remove the Phillips screws **(1)** that secure the battery to the computer. Number of screws and screw locations might vary.

h. Lift the top of the tray **(2)** to remove the battery from the computer.

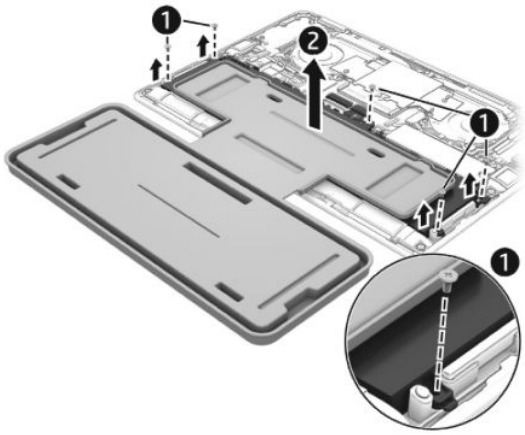

i. Rotate the battery up and over into the cavity of the containment tray.

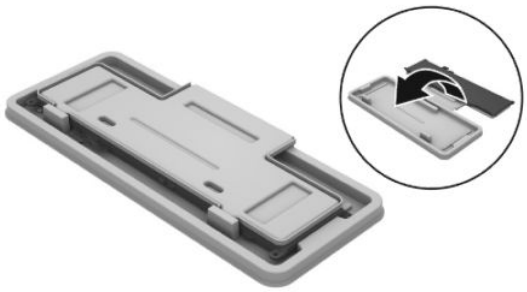

**NOTE:** Please recycle responsibly. For more information about recycling programs, see the HP website at http://www.hp.com/recycle.

2. Install the battery using the revive kit:

a. Open the containment tray that includes the new battery.

b. Turn the tray **(1)** over so the battery is facing downward, and then insert the battery **(2)** into the computer. Adhesive secures the battery to the tray.

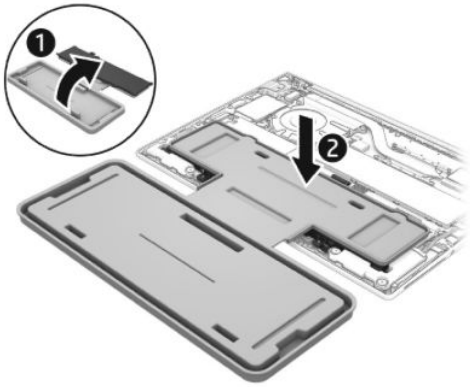


c. Install the Phillips screws **(1)** to secure the battery. Number of screws and screw locations might vary.

d. Lift the containment tray **(2)** off the battery.

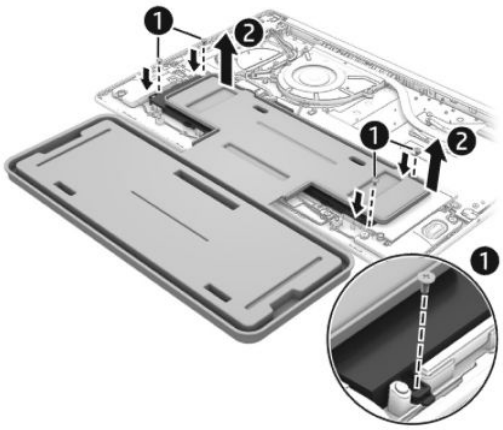

e. Connect the battery cable to the system board. The connector location might vary.

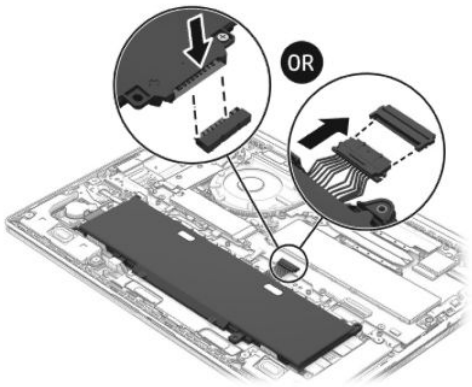


**NOTE:** When replacing the battery, be sure to completely reassemble the computer and plug in the AC adapter before turning the computer on.

# 6 Removal and replacement procedures for authorized service provider parts

This chapter provides removal and replacement procedures for authorized service provider parts.

**IMPORTANT:** Only an authorized service provider should access the components described in this chapter. Accessing these parts can damage the computer or void the warranty.

**NOTE:** Details about your computer, including model, serial number, product key, and length of warranty, are on the service tag at the bottom of your computer.

**NOTE:** The HP Support YouTube Channel (in English) has videos that provide step-by-step removal and replacement instructions for many common parts and models.

## Component replacement procedures

Use the procedures described in this section to remove and replace computer components.

**NOTE:** HP continually improves and changes product parts. For complete and current information about supported parts for your computer, go to https://partsurfer.hp.com/, select your country or region, and then follow the on-screen instructions.

Make special note of each screw size and location during removal and replacement.

### Solid-state drive

Use this procedure to remove the SSD.

**Table 6-1 SSD descriptions and part numbers**

| Description | Spare part number |
|---|---|
| 1 TB | Q44439-001 |
| 512 GB | Q44440-001 |
| 256 GB | Q44441-001 |

Before removing the SSD, follow these steps:

1. Prepare the computer for disassembly (see Preparation for disassembly on page 27).
2. Remove the bottom cover (see Bottom cover on page 27).
3. Disconnect the battery cable from the system board (see Removing and reinstalling the same battery on page 30).

Remove the SSD:

1. Remove the Phillips M1.6 × 3.0 screw **(1)** that secures the SSD.

2. Pull the SSD **(2)** out of the socket.

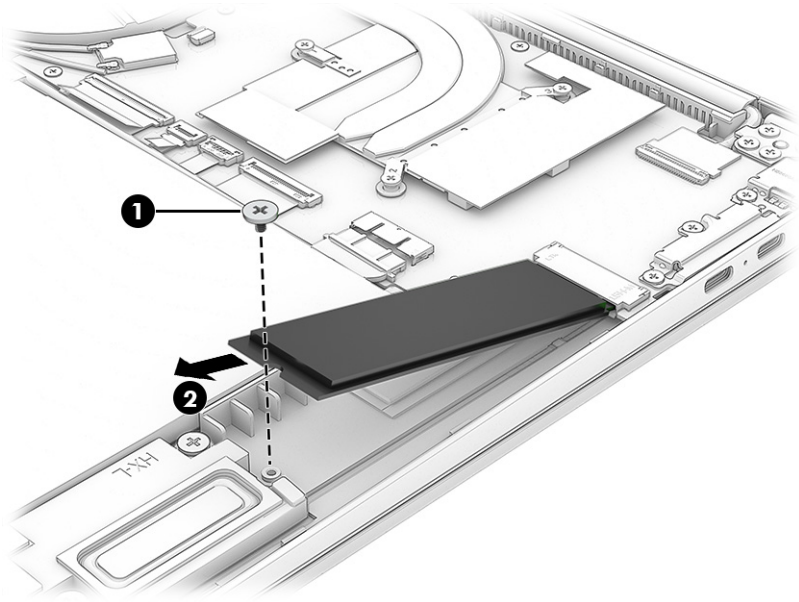


Reverse this procedure to install the SSD.

**NOTE:** SSDs are designed with a notch to prevent incorrect insertion.

## Speakers

Use this procedure to remove the speakers.

**Table 6-2 Speakers description and part number**

| Description | Spare part number |
|---|---|
| Speakers (left and right) | Q35011-001 |

Before removing the speakers, follow these steps:

1. Prepare the computer for disassembly (see Preparation for disassembly on page 27).
2. Remove the bottom cover (see Bottom cover on page 27).
3. Disconnect the battery cable from the system board (see Removing and reinstalling the same battery on page 30).

Remove the speakers:

1. Disconnect the speaker cable **(1)** from the system board.
2. Remove the four Phillips M1.6 × 3.0 screws **(2)** that secure the speakers.
3. Lift the right speaker **(3)** out of the computer.
4. Remove the speaker cable **(4)** from the clips along the bottom of the computer.

5. Remove the left speaker **(5)** from the computer.

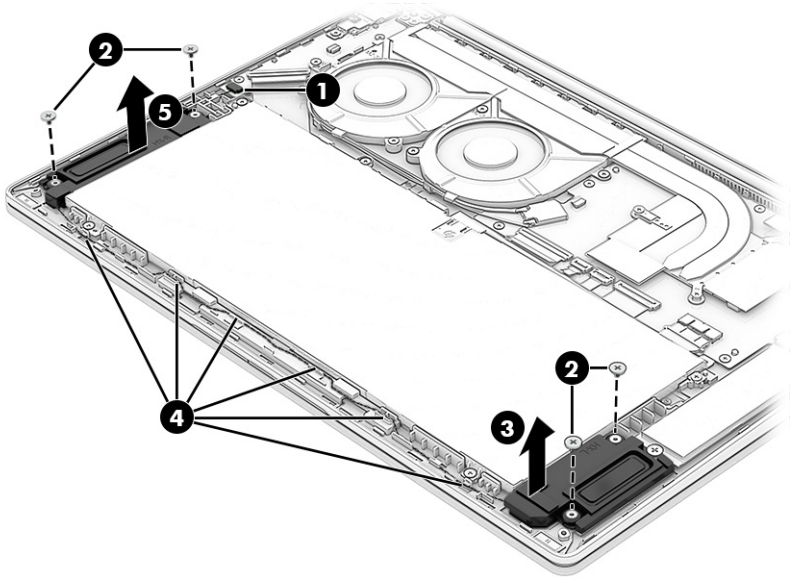


Reverse this procedure to install the speakers.

## Touchpad

Use this procedure to remove the touchpad.

**Table 6-3 Touchpad descriptions and part numbers**

| Description | Spare part number |
|---|---|
| Atmospheric blue | Q39948-001 |
| Eclipse gray | Q39949-001 |
| Mist silver | Q39950-001 |

Before removing the touchpad, follow these steps:

1. Prepare the computer for disassembly (see Preparation for disassembly on page 27).
2. Remove the bottom cover (see Bottom cover on page 27).
3. Remove the battery (see Removing and reinstalling the same battery on page 30).

Remove the touchpad:

1. Lift up the thick I/O cable **(1)** that covers the top of the touchpad.
2. Disconnect the touchpad cable from the system board ZIF connector **(2)**.
3. Lift up the protective tape **(3)** that covers the top of the touchpad.
4. Peel the touchpad cable **(4)** off the computer.
5. Remove the three Phillips M1.2 × 1.2 screws **(5)** from the touchpad.

6. Remove the touchpad **(6)** from the computer.

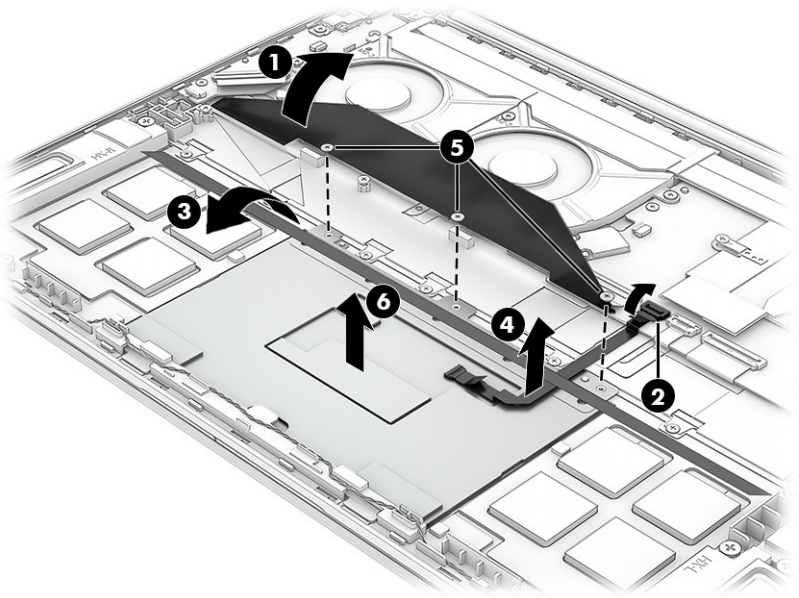


Reverse this procedure to install the touchpad.

When installing a touchpad, be sure to install the protective tape onto the top of the touchpad as shown in the following illustration.

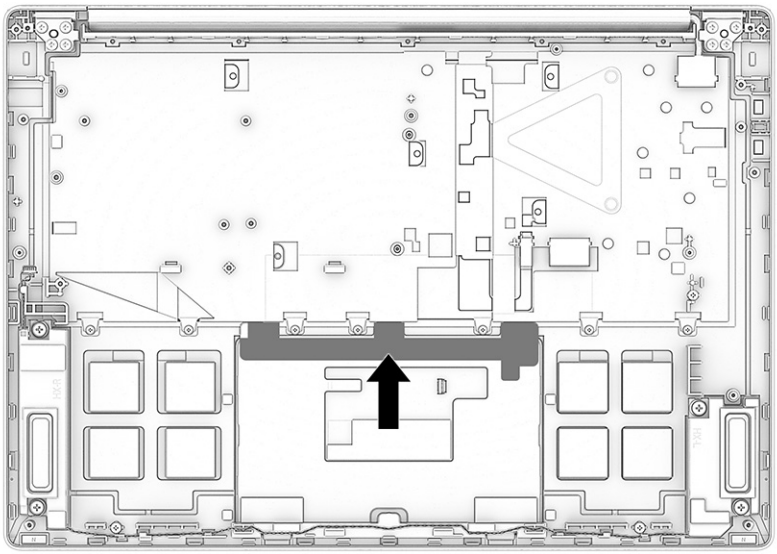

## I/O board

Use this procedure to remove the I/O board.

**Table 6-4 I/O board description and part number**

| Description | Spare part number |
|---|---|
| I/O board (includes cable) | Q39951-001 |

Before removing the I/O board, follow these steps:

1. Prepare the computer for disassembly (see Preparation for disassembly on page 27).
2. Remove the bottom cover (see Bottom cover on page 27).
3. Disconnect the battery cable from the system board (see Removing and reinstalling the same battery on page 30).
4. Remove the right fan (see Fans on page 43).

Remove the I/O board:

1. Disconnect the thick cable from the I/O board ZIF connector **(1)**.
2. Remove the two Phillips 2.0 × 3.0 screws **(2)** from the bracket on the I/O board.
3. Remove the bracket **(3)**.
4. Remove the two Phillips 1.4 × 1.8 screws **(4)** from the I/O board.
5. Remove the I/O board **(5)** from the computer.

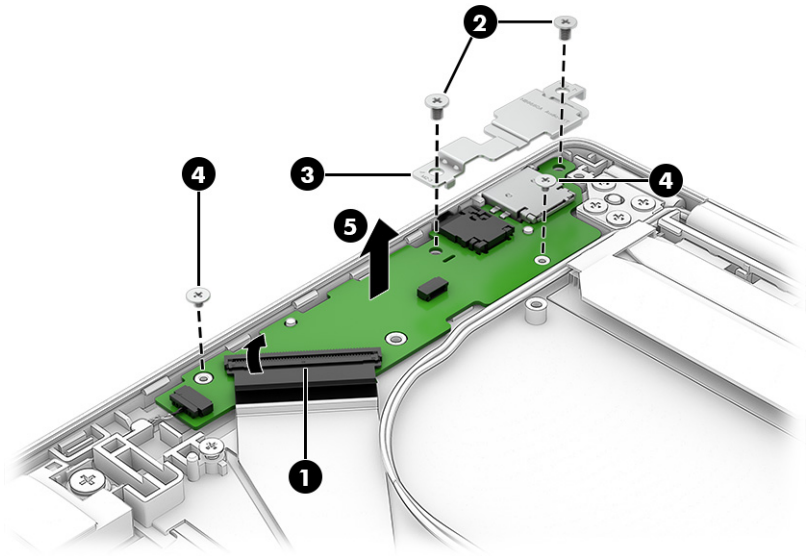

6. If you need to remove only the I/O board cable, disconnect the thick cable from the I/O board ZIF connector **(1)** and from the system board ZIF connector **(2)**. Remove the cable **(3)**.

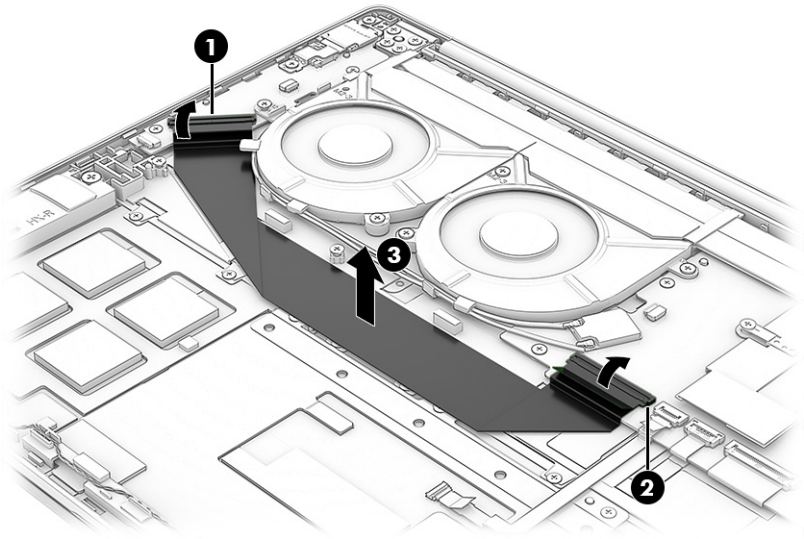


Reverse this procedure to install the I/O board.

## Fans

Use this procedure to remove the fans.

**Table 6-5 Fans description and part number**

| Description | Spare part number |
|---|---|
| Fans | Q35012-001 |

Before removing the fans, follow these steps:

1. Prepare the computer for disassembly (see Preparation for disassembly on page 27).
2. Remove the bottom cover (see Bottom cover on page 27).
3. Disconnect the battery cable from the system board (see Removing and reinstalling the same battery on page 30).

Remove the fans:

1. Disconnect the fan cables from the system board connectors **(1)**.
2. Remove the antenna cables from the clips **(2)** along the bottom and left side of the left fan.
3. Remove the five Phillips M2.0 × 3.0 screws **(3)** from the fans.

4. Remove the fans **(4)** from the computer.

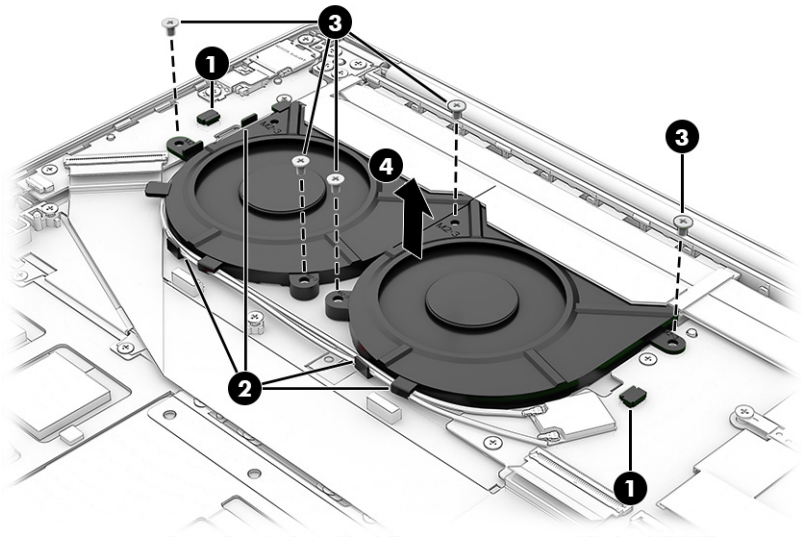


Reverse this procedure to install the fans.

## Heat sink

Use this procedure to remove the heat sink.

**Table 6-6 Heat sink description and part number**

| Description | Spare part number |
|---|---|
| Heat sink | Q35013-001 |

Before removing the heat sink, follow these steps:

1. Prepare the computer for disassembly (see Preparation for disassembly on page 27).
2. Remove the bottom cover (see Bottom cover on page 27).
3. Disconnect the battery cable from the system board (see Removing and reinstalling the same battery on page 30).

To remove the heat sink:

1. In the order shown on the heat sink, remove the three Phillips M2.0 × 3.0 screws **(1)** from the heat sink.

2. Remove the heat sink **(2)**.

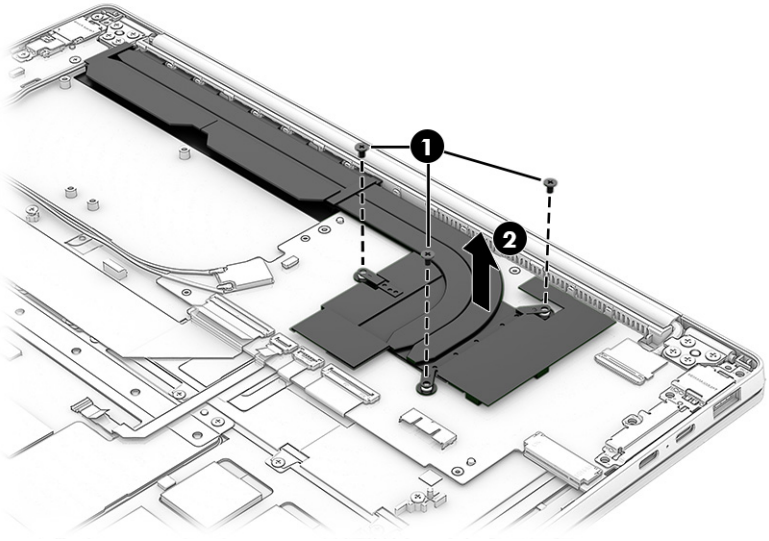


3. Each time the heat sink is removed, thoroughly clean and replace the gray thermal paste **(1)** and confirm installation of the thermal pads **(2)** on the heat sink. Remember to reapply on the heat sink, instead of the system board. Thoroughly clean the grease from system boards that you plan to recycle, because the gray grease will no longer be in a sealed space.

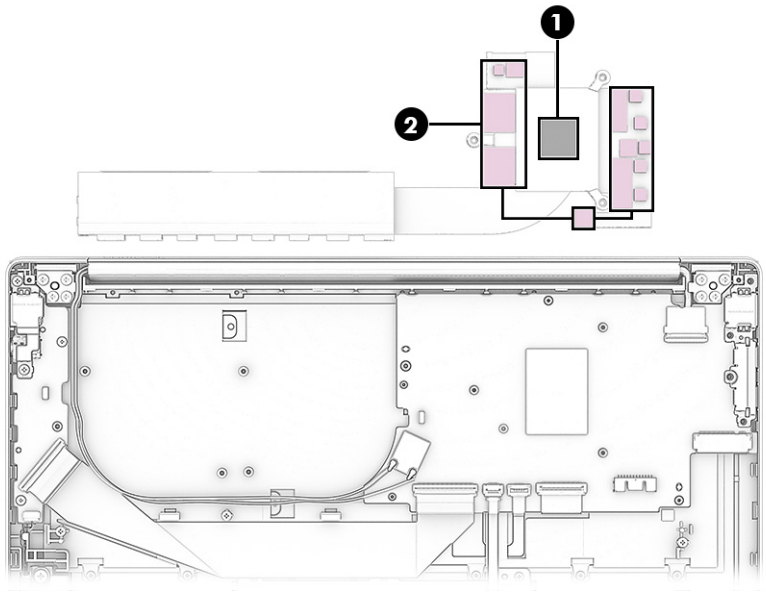


Reverse this procedure to install the heat sink.

## System board

Use this procedure to remove the system board.

**Table 6-7 System board descriptions and part numbers**

| Description | Spare part number |
|---|---|
| **System board** (includes integrated processor and system memory) | |
| Intel Core 7 350 and 32 GB of system memory | Q39937-601 |
| Intel Core 7 350 and 16 GB of system memory | Q39936-601 |
| Intel Core 5 320 and 32 GB of system memory | Q39934-601 |
| Intel Core 5 320 and 16 GB of system memory | Q39933-601 |
| Intel Core 5 320 and 8 GB of system memory | Q39935-601 |
| Intel Core 5 315 and 16 GB of system memory | Q39931-601 |
| Intel Core 5 315 and 8 GB of system memory | Q39932-601 |

Before removing the system board, follow these steps:

1. Prepare the computer for disassembly (see Preparation for disassembly on page 27).
2. Remove the bottom cover (see Bottom cover on page 27).
3. Disconnect the battery cable from the system board (see Removing and reinstalling the same battery on page 30).
4. Remove the SSD (see Solid-state drive on page 38).
5. Remove the fans (see Fans on page 43).

Remove the system board:

1. Disconnect the following cables from the system board:
   - Display cable (ZIF) **(1)**
   - Touchpad cable (ZIF) **(2)**
   - Keyboard cable (ZIF) **(3)**
   - Keyboard backlight cable (ZIF) **(4)**
   - Antenna cables from integrated WLAN module **(5)**
   - I/O board cable (ZIF) **(6)** from the I/O board

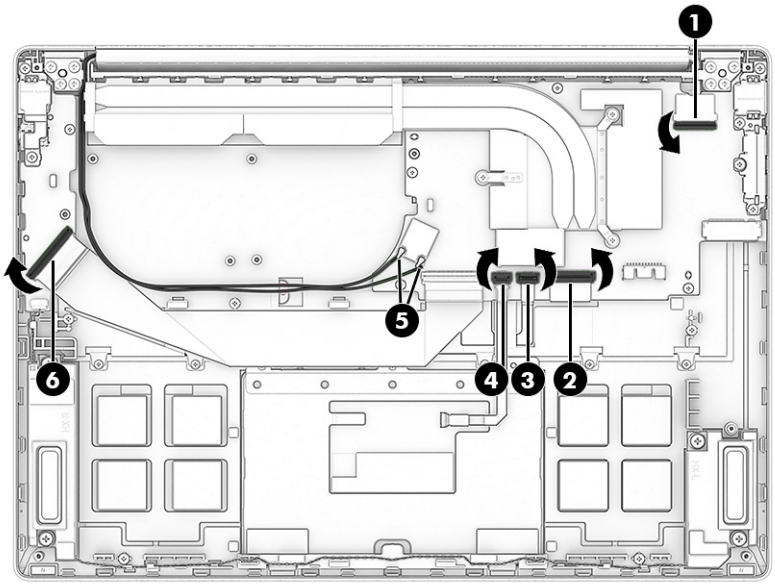


2. Remove the four Phillips M2.0 × 3.0 screws **(1)** from the bracket on the system board.
3. Remove the four Phillips M1.4 × 1.8 screws **(2)** from the system board.

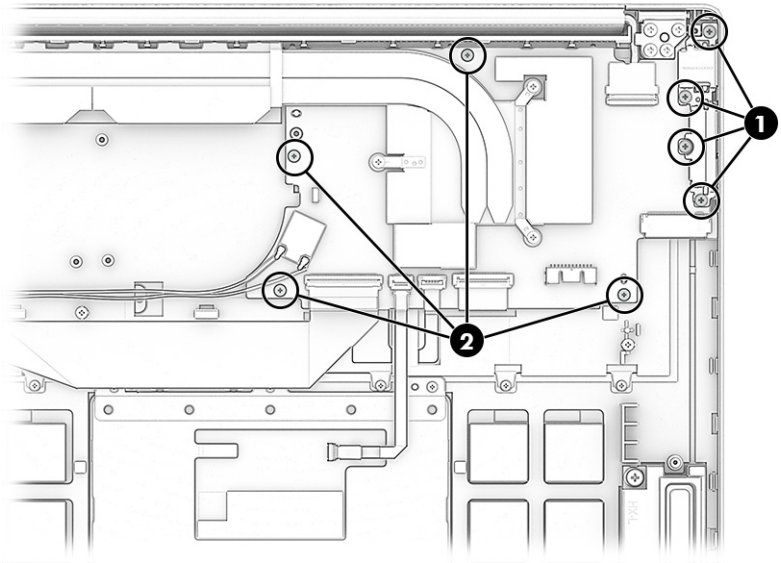


4. Lift the left side of the system board **(1)** up at an angle.

5. Pull the system board **(2)** up and away from the computer to remove it.

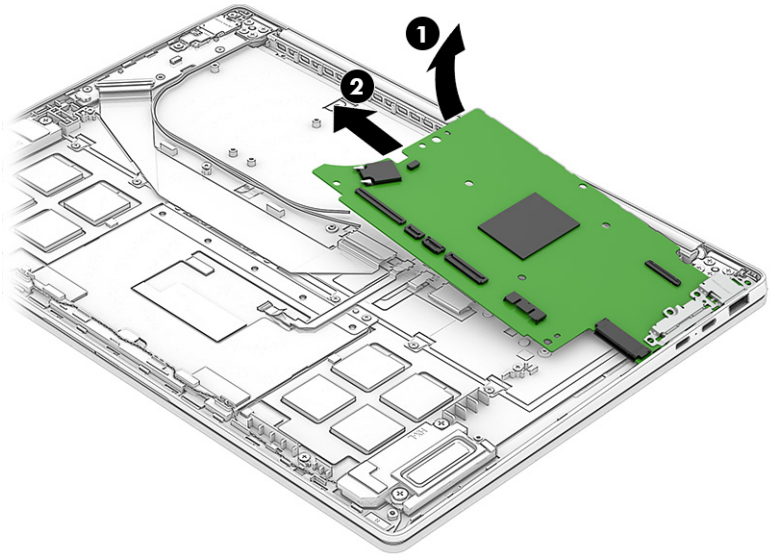


Reverse this procedure to install a system board.

## Display assembly

Use this procedure to remove and disassemble the display assembly.

**NOTE:** The display assembly is only available as spare parts at the subcomponent level. For display assembly spare part information, see the individual removal subsections.

Before removing the display panel, follow these steps:

1. Prepare the computer for disassembly (see Preparation for disassembly on page 27).
2. Remove the bottom cover (see Bottom cover on page 27).
3. Disconnect the battery cable from the system board (see Removing and reinstalling the same battery on page 30).

Remove the display assembly:

1. Remove the plastic antenna protector **(1)** from the integrated WLAN module.
2. Disconnect the antenna cables **(2)** from the integrated WLAN module.
3. Remove the antenna cables from the clips **(3)** around the fan.

4. Disconnect the display cable **(4)** from the system board ZIF connector.

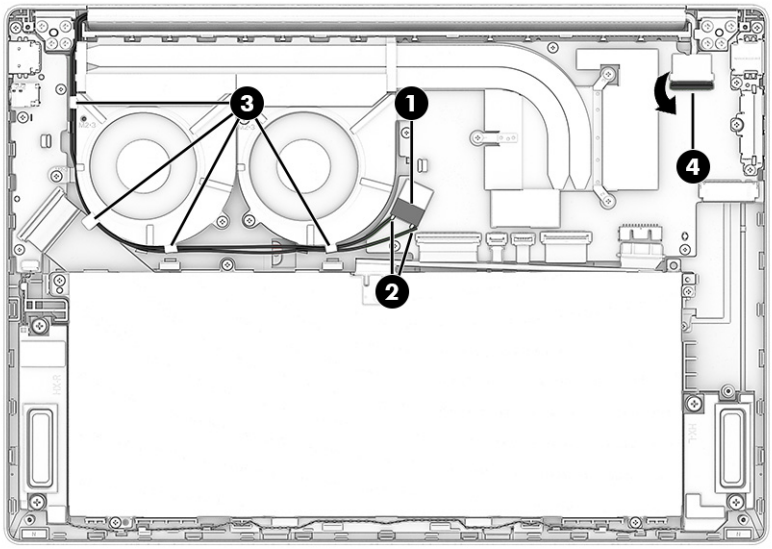


5. Remove the eight Phillips M2.5 × 4.0 screws that secure the display assembly to the computer.

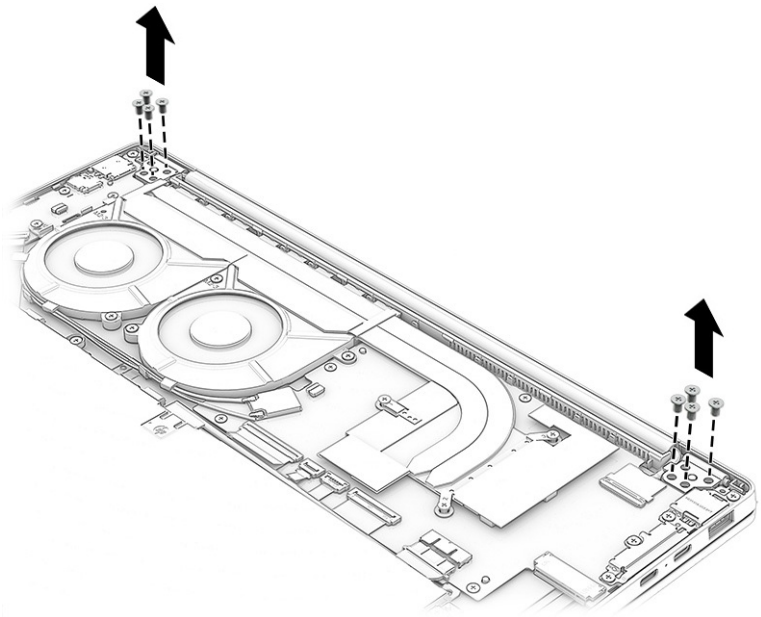

6. Open the display **(1)**.

7. Separate the display **(2)** from the computer.

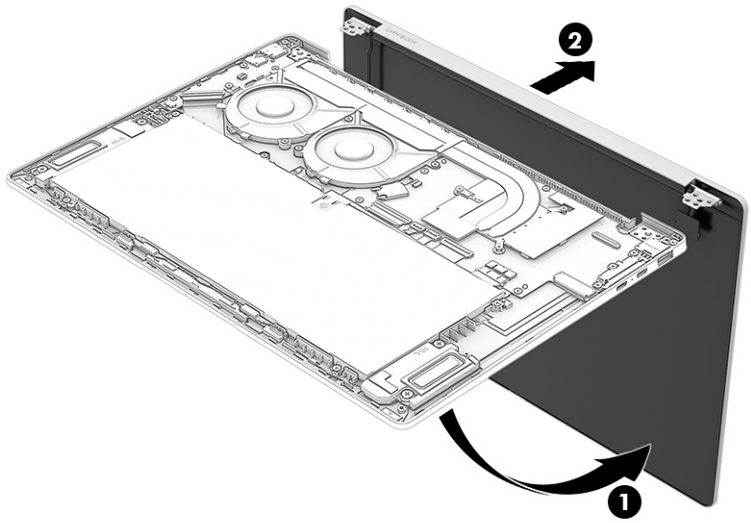


8. To remove the display panel:

**NOTE:** This step might require two people to complete.

a. Install suction cups **(1)** on both sides of the upper left corner of the display.

b. Pull the suction cups **(2)** away from each other while inserting a tool **(3)** into the gap between the panel and display enclosure near the suction cups.

c. Pull the tool **(4)** across the top of the panel to release it.

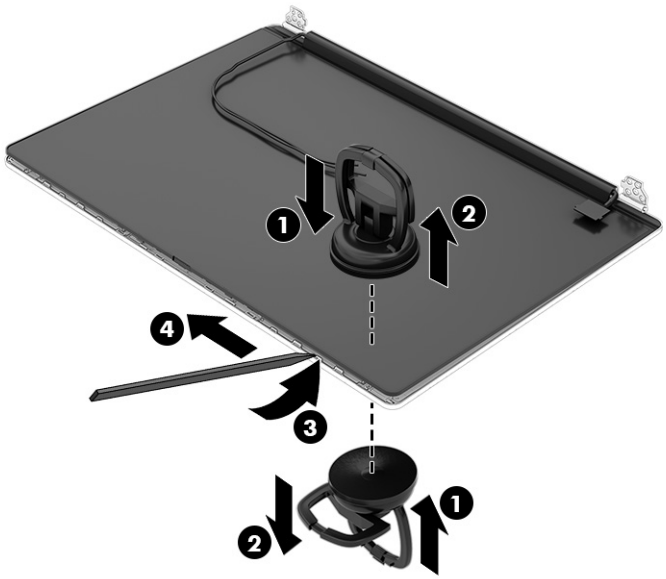


d. Stretchable tape along both sides of the panel secures the panel to the display rear cover. Use tweezers **(1)** to grasp the tape, and then pull the tape **(2)** out from behind the panel.

e. Use a tool **(3)** to release the bottom of both the left and right sides of the panel.

f. Lift the panel off the display **(4)** and place it next to the display rear cover.

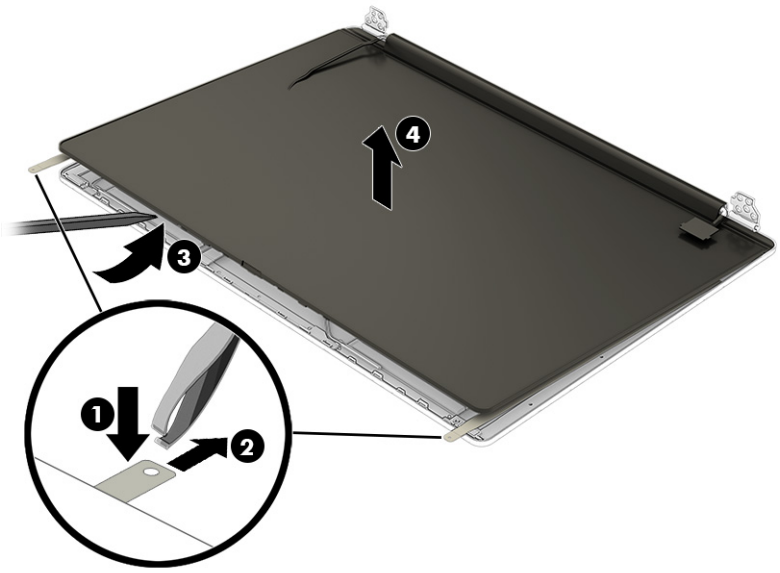


g. When installing a display panel, use the following illustration to determine tape installation locations on the inside of the display rear cover.

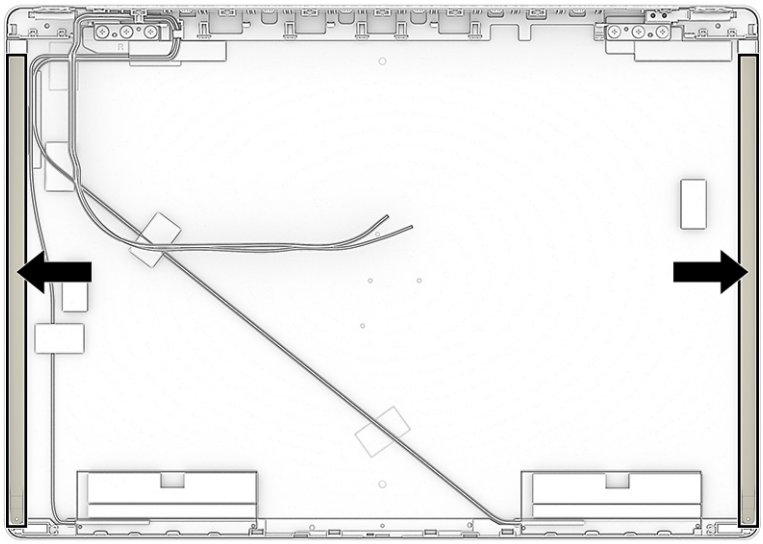

9. To remove the camera module:

a. Insert a tool under the right side of the camera **(1)** and pull the tool **(2)** the length of the camera.

b. Disconnect the cable **(3)** from the ZIF connector on the camera, and then remove the camera.

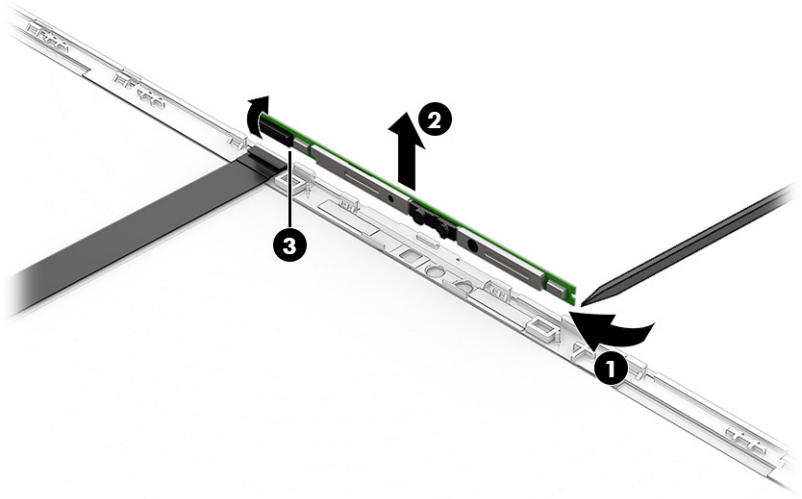


10. To remove the display/camera cable:
    a. Remove the cable from the clips **(1)** near the hinge.
    b. Peel the cable **(2)** off the inside of the display enclosure.
    c. Peel the tape **(3)** off the connector on the back of the panel.
    d. Rotate the locking lever **(4)**, and then disconnect the cable **(5)** from the panel.

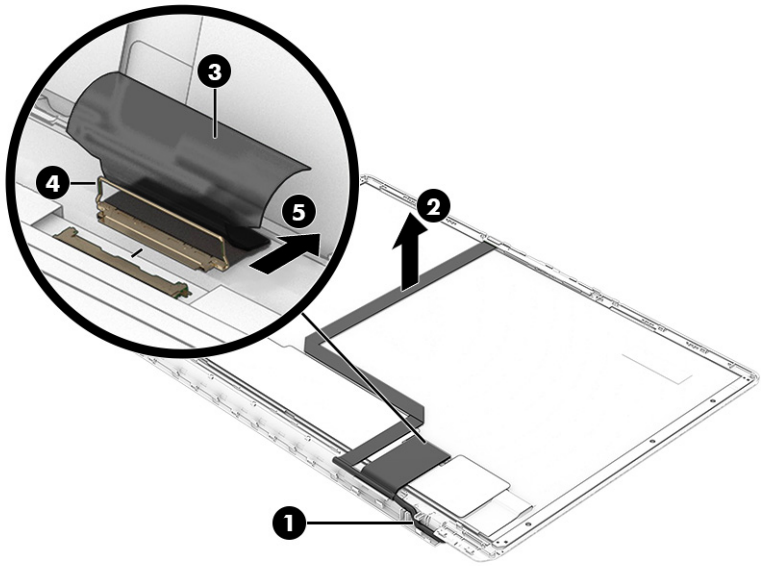


11. To remove the hinges:
    a. Remove the three Phillips M2.5 × 2.5 screws **(1)** from each hinge.

b. Remove the hinges **(2)** from the display back cover.

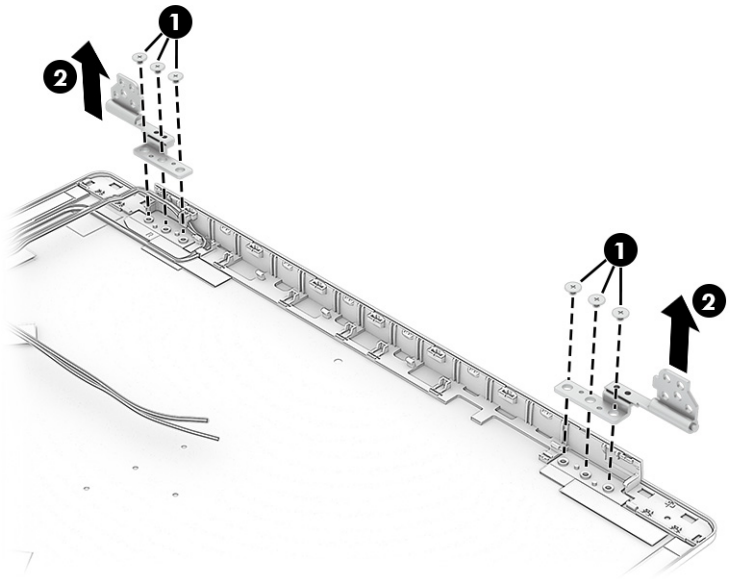


12. To remove the wireless antennas and cables:

    a. Remove the cables from the clip **(1)** near the right hinge.

    b. Remove the cables from the tape **(2)** on the inside of the display rear cover.

    c. Peel the antennas **(3)** off the display rear cover.

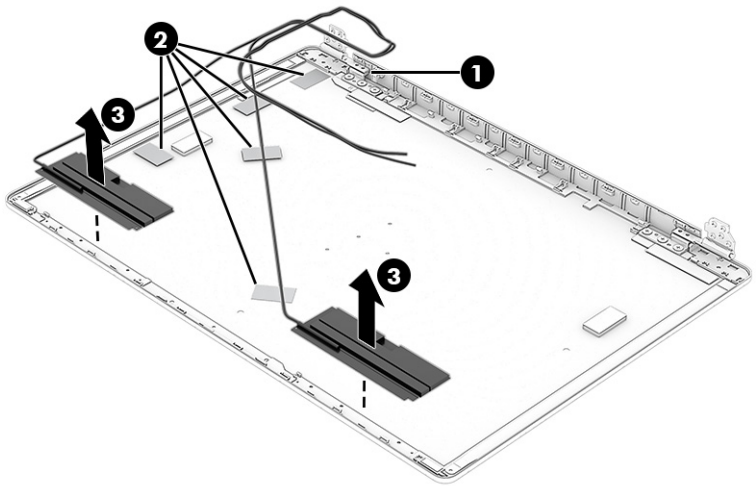


Reverse this procedure to reassemble and replace the display assembly.

## Keyboard

Use this procedure to remove the keyboard from the top cover.

**Table 6-8 Top cover and keyboard descriptions and part numbers**

| Description | Spare part number |
|---|---|
| Top cover, atmospheric blue | Q39945-001 |
| Top cover, eclipse gray | Q39946-001 |
| Top cover, mist silver | Q39947-001 |
| Keyboard, darker atmospheric blue | Q41695-xx1 |
| Keyboard, darker eclipse gray | Q41696-xx1 |
| Keyboard, soft gray | Q41697-xx1 |

Before removing the keyboard, follow these steps:

1. Prepare the computer for disassembly (see Preparation for disassembly on page 27).
2. Remove the bottom cover (see Bottom cover on page 27).
3. Remove the battery (see Removing and reinstalling the same battery on page 30).
4. Remove the system board (see System board on page 45).

**NOTE:** To avoid having to clean and reapply thermal grease, do not remove the heat sink before removing the system board.

Remove the keyboard:

1. Pull out the blue stretchable tape **(1)** that secures the keyboard from four locations.
2. Pull out the red stretchable tape **(2)** that secures the keyboard from one location.

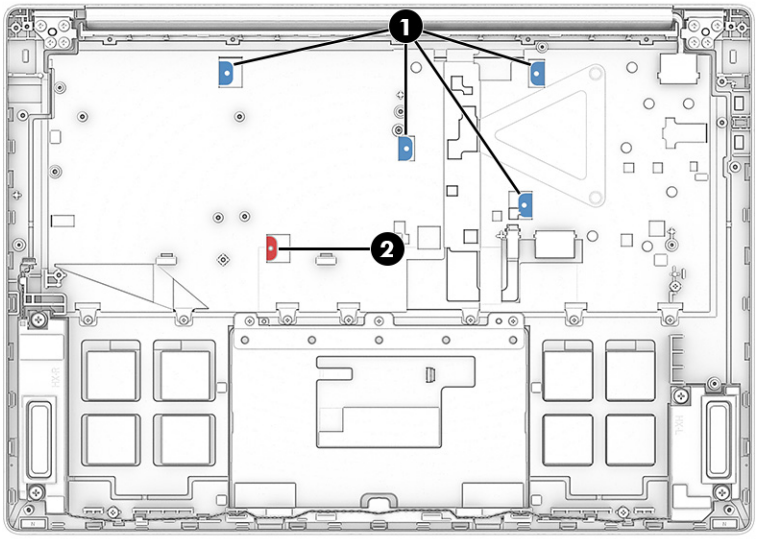


3. Remove the seven Phillips M1.2 × 2.0 screws **(1)** from the keyboard.
4. Remove the keyboard **(2)**.

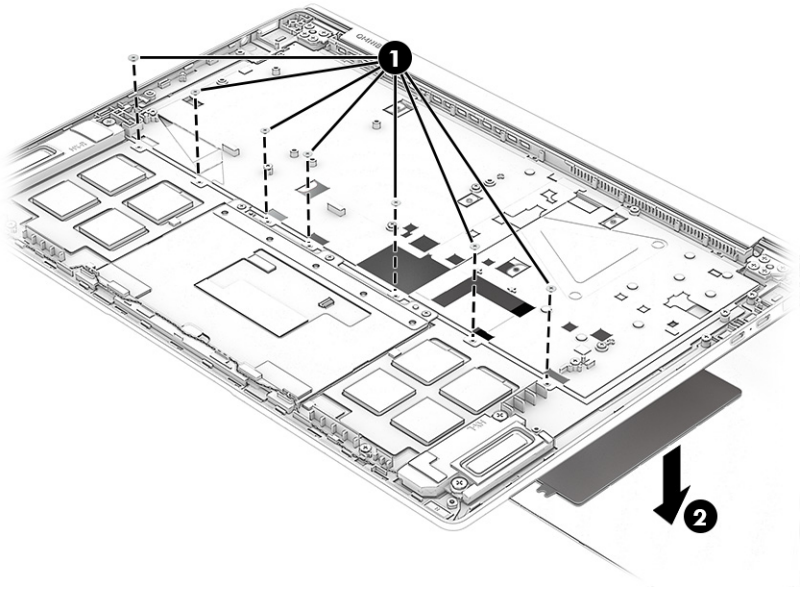


Reverse this procedure to install the keyboard.

# 7 Backing up, restoring, and recovering

You can use Windows tools or HP software to back up your information, create a restore point, reset your computer, create recovery media, or restore your computer to its factory state. Performing these standard procedures can return your computer to a working state faster.

**IMPORTANT:** If you are performing recovery procedures on a tablet, the tablet battery must be at least 70% charged before you start the recovery process.

**IMPORTANT:** For a tablet with a detachable keyboard, connect the tablet to the keyboard base before beginning any recovery process.

## Backing up information and creating recovery media

These methods of creating recovery media and backups are available on select products only.

### Using Windows tools for backing up

HP recommends that you back up your information immediately after initial setup. You can do this task either using Windows Backup locally with an external USB flash drive or using online tools.

**NOTE:** If computer storage is 32 GB or less, Microsoft System Restore is disabled by default.

### Using the HP Cloud Recovery Download Tool to create a recovery USB flash drive (select products only)

You can use the HP Cloud Recovery Download Tool to create an HP Recovery bootable USB flash drive.

For details:

- Go to http://www.hp.com, search for HP Cloud Recovery, and then select the result that matches the type of computer that you have and follow the on-screen instructions.

**NOTE:** In select countries, if you cannot create the HP Recovery USB flash drive yourself, contact support. Go to http://www.hp.com/support, select your country or region, and then follow the on-screen instructions.

**IMPORTANT:** HP recommends that you follow the Restoring and recovery methods on page 57 to restore your computer before you obtain and use the HP USB flash drive. Using a recent backup can return your machine to a working state sooner than using the HP USB flash drive. After the system is restored, reinstalling all the operating system software released since your initial purchase can be a lengthy process.

## Restoring and recovering your system

You have several tools available to recover your system both within and outside of Windows if the desktop cannot load.

HP recommends that you attempt to restore your system using the Restoring and recovery methods on page 57.

## Creating a system restore

System Restore is available in Windows. The System Restore software can automatically or manually create restore points, or snapshots, of the system files and settings on the computer at a particular point.

When you use System Restore, it returns your computer to its state at the time you made the restore point. Your personal files and documents should not be affected.

## Restoring and recovery methods

After you run the first method, test to see whether the issue still exists before you proceed to the next method, which might now be unnecessary.

1. Run a Microsoft System Restore.
2. Run Reset this PC.

**NOTE:** The options **Remove everything** and then **Fully clean the drive** can take several hours to complete and leave no information on your computer. It is the safest way to reset your computer before you recycle it.

3. Recover using the HP Recovery USB flash drive. For more information, see Recovering using the HP Recovery USB flash drive on page 57.

For more information about the first two methods, see the Get Help app:

- Select the **Start** button, select **All apps**, select the **Get Help** app, and then enter the task you want to perform.

**NOTE:** You must be connected to the internet to access the Get Help app.

## Recovering using the HP Recovery USB flash drive

You can use the HP Recovery USB flash drive to recover the operating system and drivers that were installed at the factory. On select products, you can create recovery media on a bootable USB flash drive using the HP Cloud Recovery Download Tool.

For details, see Using the HP Cloud Recovery Download Tool to create a recovery USB flash drive (select products only) on page 56.

**NOTE:** In select countries, if you cannot create the HP Recovery USB flash drive yourself, contact support. Go to http://www.hp.com/support, select your country or region, and then follow the on-screen instructions.

To recover your system:

- Insert the HP Recovery USB flash drive, and then restart the computer.

**NOTE:** HP recommends that you follow the Restoring and recovery methods on page 57 to restore your computer before you obtain and use the HP USB flash drive. Using a recent backup can return your machine to a working state sooner than using the HP USB flash drive. After the system is restored, reinstalling all the operating system software released since your initial purchase can be a lengthy process.

## Changing the computer boot order

If your computer does not restart using the HP Recovery USB flash drive, you can change the computer boot order, which is the order of devices listed in BIOS for startup information.

**IMPORTANT:** For a tablet with a detachable keyboard, connect the tablet to the keyboard base before beginning these steps.

To change the boot order:

1. Insert the HP Recovery USB flash drive.
2. Access the system **Startup** menu.
   - For computers or tablets with keyboards attached, turn on or restart the computer or tablet, quickly press esc, and then press f9 for boot options.
   - For tablets without keyboards, turn on or restart the tablet, and then quickly press and hold one of the following buttons:
     - Volume up
     - Volume down

     Then select **f9**.
3. Select the USB flash drive to boot from, and then follow the on-screen instructions.

## Using HP Sure Recover (select products only)

Select computer models are configured with HP Sure Recover, a PC operating system (OS) recovery solution built into the hardware and software. HP Sure Recover can fully restore the HP OS image without installed recovery software.

Using HP Sure Recover, an administrator or user can restore the system and install:

- Latest version of the OS
- Platform-specific device drivers
- Software applications, in the case of a custom image

To access the latest documentation for HP Sure Recover, go to http://www.hp.com/support. Follow the on-screen instructions to find your product and locate your documentation.

# 8 Using HP PC Hardware Diagnostics

You can use the HP PC Hardware Diagnostics utility to determine whether your computer hardware is running properly. The three versions are HP PC Hardware Diagnostics Windows, HP PC Hardware Diagnostics UEFI (Unified Extensible Firmware Interface), and (for select products only) Remote HP PC Hardware Diagnostics UEFI, a firmware feature.

## Using HP PC Hardware Diagnostics Windows (select products only)

HP PC Hardware Diagnostics Windows is a Windows-based utility that allows you to run diagnostic tests to determine whether the computer hardware is functioning properly. The tool runs within the Windows operating system to diagnose hardware failures.

If HP PC Hardware Diagnostics Windows is not installed on your computer, you must download and install it. To download HP PC Hardware Diagnostics Windows, see Downloading HP PC Hardware Diagnostics Windows on page 60.

### Using an HP PC Hardware Diagnostics Windows hardware failure ID code

When HP PC Hardware Diagnostics Windows detects a failure that requires hardware replacement, a 24-digit failure ID code is generated for select component tests. For interactive tests, such as keyboard, mouse, or audio and video palette, you must perform troubleshooting steps before you can receive a failure ID.

You have several options after you receive a failure ID:

- Select **Next** to open the Event Automation Service (EAS) page, where you can log the case.
- Scan the QR code with your mobile device, which takes you to the EAS page, where you can log the case.
- Select the box next to the 24-digit failure ID to copy your failure code and send it to support.

### Accessing HP PC Hardware Diagnostics Windows

After HP PC Hardware Diagnostics Windows is installed, you can access it from HP Support Assistant or the Start menu.

#### Accessing HP PC Hardware Diagnostics Windows from HP Support Assistant (select products only)

After HP PC Hardware Diagnostics Windows is installed, follow these steps to access it from HP Support Assistant.

1. Complete one of the following tasks:
   - Select the **Search** icon in the taskbar, type `support` in the search box, and then select the **HP Support Assistant** app.
   - Select the question mark icon in the taskbar.

2. Select **Fixes & Diagnostics**.
3. Select **Run hardware diagnostics**, and then select **Launch**.
4. When the tool opens, select the type of diagnostic test that you want to run, and then follow the on-screen instructions.

**NOTE:** To stop a diagnostic test, select **Cancel**.

### Accessing HP PC Hardware Diagnostics Windows from the Start menu (select products only)

After HP PC Hardware Diagnostics Windows is installed, follow these steps to access it from the Start menu.

1. Select the **Start** button, and then select **All apps**.
2. Select **HP PC Hardware Diagnostics Windows**.
3. When the tool opens, select the type of diagnostic test that you want to run, and then follow the on-screen instructions.

**NOTE:** To stop a diagnostic test, select **Cancel**.

## Downloading HP PC Hardware Diagnostics Windows

The HP PC Hardware Diagnostics Windows downloading instructions are provided in English only. You must use a Windows computer to download this tool because only .exe files are provided.

### Downloading the latest HP PC Hardware Diagnostics Windows version from HP

To download HP PC Hardware Diagnostics Windows from HP, follow these steps.

1. Go to http://www.hp.com/go/techcenter/pcdiags. The HP PC Diagnostics home page is displayed.
2. Select **Diagnose PC Hardware issues in Windows**, scroll down to the expanded window that appears, and then select **Download**.
3. A pop-up that asks what you want to do with the file opens. Select **Open** or **Save As**. The latest version of the diagnostics tool opens or downloads to the selected location.

### Downloading the HP PC Hardware Diagnostics Windows from the Microsoft Store

You can download the HP PC Hardware Diagnostics Windows from the Microsoft Store.

1. Select the Microsoft Store app on your desktop or select the **Search** icon in the taskbar, and then type `Microsoft Store` in the search box.
2. Type `HP PC Hardware Diagnostics Windows` in the **Microsoft Store** search box.
3. Follow the on-screen directions.

The tool downloads to the selected location.

### Downloading HP Hardware Diagnostics Windows by product name or number (select products only)

You can download HP PC Hardware Diagnostics Windows by product name or number.

**NOTE:** For some products, you might have to download the software to a USB flash drive by using the product name or number.

1. Go to http://www.hp.com/support.
2. Select **Software and Drivers**, select your type of product, and then enter the product name or number in the search box that is displayed.
3. In the **Diagnostics** section, select **Download**, and then follow the on-screen instructions to select the specific Windows diagnostics version to be downloaded to your computer or USB flash drive.

The tool downloads to the selected location.

## Installing HP PC Hardware Diagnostics Windows

To install HP PC Hardware Diagnostics Windows, navigate to the folder on your computer or the USB flash drive where the .exe file downloaded, double-click the .exe file, and then follow the on-screen instructions.

# Using HP PC Hardware Diagnostics UEFI

HP PC Hardware Diagnostics Unified Extensible Firmware Interface (UEFI) allows you to run diagnostic tests to determine whether the computer hardware is functioning properly. The tool runs outside the operating system so that it can isolate hardware failures from issues that are caused by the operating system or other software components.

**NOTE:** For some products, you must use a Windows computer and a USB flash drive to download and create the HP UEFI support environment because only .exe files are provided. For more information, see Downloading HP PC Hardware Diagnostics UEFI to a USB flash drive on page 62.

If your PC does not start in Windows, you can use HP PC Hardware Diagnostics UEFI to diagnose hardware issues.

## Using an HP PC Hardware Diagnostics UEFI hardware failure ID code

When HP PC Hardware Diagnostics UEFI detects a failure that requires hardware replacement, a 24-digit failure ID code is generated.

For assistance in solving the problem, complete one of these tasks:

- Select **Contact HP**, accept the HP privacy disclaimer, and then use a mobile device to scan the failure ID code that appears on the next screen. The HP Customer Support - Service Center page appears with your failure ID and product number automatically filled in. Follow the on-screen instructions.
- Contact support, and provide the failure ID code.

## Starting HP PC Hardware Diagnostics UEFI

To start HP PC Hardware Diagnostics UEFI, follow this procedure.

1. Turn on or restart the computer, and quickly press esc.

2. Press f2.

   The BIOS searches three places for the diagnostic tools, in the following order:

   a. Connected USB flash drive

   **NOTE:** To download the HP PC Hardware Diagnostics UEFI tool to a USB flash drive, see Downloading the latest HP PC Hardware Diagnostics UEFI version on page 63.

   b. Hard drive

   c. BIOS

3. When the diagnostic tool opens, select the type of diagnostic test that you want to run, and then follow the on-screen instructions.

## Starting HP PC Hardware Diagnostics UEFI through HP Hotkey Support software (select products only)

This section describes how to start HP PC Hardware Diagnostics UEFI through HP Hotkey Support software.

**NOTE:** You must disable Fast Boot to access HP PC Hardware Diagnostics UEFI from the HP System Information application.

To disable Fast Boot:

1. Turn on or restart the computer, and when the HP logo appears, press f10 to enter Computer Setup.
2. Select **Advanced**, and then select **Boot Options**.
3. Clear **Fast Boot**.
4. Select **Save Changes and Exit**, and then select **Yes**.

To start HP PC Hardware Diagnostics UEFI through HP Hotkey Support software, follow this procedure:

1. From the **Start** menu, open the HP System Information Application or press fn+esc.
2. In the HP System Information screen, select **Run System Diagnostics**, select **Yes** to run the application, and then select **Restart**.

**IMPORTANT:** To prevent loss of data, save your work in all open apps before restarting your computer.

**NOTE:** When the restart is complete, the computer opens the HP PC Hardware Diagnostics UEFI Application. Proceed with the troubleshooting tests.

## Downloading HP PC Hardware Diagnostics UEFI to a USB flash drive

Downloading HP PC Hardware Diagnostics UEFI to a USB flash drive can be useful in some situations.

- HP PC Hardware Diagnostics UEFI is not included in the preinstallation image.
- HP PC Hardware Diagnostics UEFI is not included in the HP Tool partition.

- The hard drive is damaged.

**NOTE:** The HP PC Hardware Diagnostics UEFI downloading instructions are provided in English only, and you must use a Windows computer to download and create the HP UEFI support environment because only `.exe` files are provided.

### Downloading the latest HP PC Hardware Diagnostics UEFI version

To download the latest HP PC Hardware Diagnostics UEFI version to a USB flash drive, follow these steps.

1. Go to http://www.hp.com/go/techcenter/pcdiags. The HP PC Diagnostics home page is displayed.
2. Select **Diagnose PC Hardware Issues outside of the OS**, scroll down to the expanded window that appears, and then select **Download**.
3. A pop-up that asks what you want to do with the file opens. Select **Open** or **Save As**. The latest version of the diagnostics tool opens or downloads to the selected location.

### Downloading HP PC Hardware Diagnostics UEFI by product name or number (select products only)

You can download HP PC Hardware Diagnostics UEFI by product name or number (select products only) to a USB flash drive.

**NOTE:** For some products, you might have to download the software to a USB flash drive by using the product name or number.

1. Go to http://www.hp.com/support.
2. Enter the product name or number, select your computer, and then select your operating system.
3. In the **Diagnostics** section, follow the on-screen instructions to select and download the specific UEFI Diagnostics version for your computer.

## Using Remote HP PC Hardware Diagnostics UEFI settings (select products only)

Remote HP PC Hardware Diagnostics UEFI is a firmware (BIOS) feature that downloads HP PC Hardware Diagnostics UEFI to your computer. It can then run the diagnostics on your computer, and it might upload results to a preconfigured server.

For more information about Remote HP PC Hardware Diagnostics UEFI, go to http://www.hp.com/go/techcenter/pcdiags, select **Diagnose Other Potential Issues**, scroll down to **Remote PC Hardware Diagnostics UEFI**, and then select **Learn More**.

### Downloading Remote HP PC Hardware Diagnostics UEFI

Remote HP PC Hardware Diagnostics UEFI is also available as a SoftPaq that you can download to a server.

### Downloading the latest Remote HP PC Hardware Diagnostics UEFI version

You can download the latest Remote HP PC Hardware Diagnostics UEFI version to a USB flash drive.

1. Go to http://www.hp.com/go/techcenter/pcdiags. The HP PC Diagnostics home page is displayed.

2. Select **Diagnose PC Hardware Issues outside of the OS**, scroll down to the expanded window that appears, and then select **Download**.

3. A pop-up asks what you want to do with the file. Select **Open** or **Save As**. The latest version of the diagnostics tool opens or downloads to the selected location.

### Downloading Remote HP PC Hardware Diagnostics UEFI by product name or number

You can download Remote HP PC Hardware Diagnostics UEFI by product name or number.

**NOTE:** For some products, you might have to download the software by using the product name or number.

1. Go to http://www.hp.com/support.

2. Select **Software and Drivers**, select your type of product, enter the product name or number in the search box that is displayed, select your computer, and then select your operating system.

3. In the **Diagnostics** section, follow the on-screen instructions to select and download the **Remote UEFI** version for the product.

## Customizing Remote HP PC Hardware Diagnostics UEFI settings

Using the Remote HP PC Hardware Diagnostics setting in Computer Setup (BIOS), you can perform several customizations.

- Set a schedule for running diagnostics unattended. You can also start diagnostics immediately in interactive mode by selecting **Execute Remote HP PC Hardware Diagnostics UEFI**.
- Set the location for downloading the diagnostic tools. This feature provides access to the tools from the HP website or from a server that has been preconfigured for use. Your computer does not require the traditional local storage, such as a hard drive or USB flash drive, to run remote diagnostics.
- Set a location for storing the test results. You can also set the user name and password that you use for uploads.
- Display status information about the diagnostics run previously.

To customize Remote HP PC Hardware Diagnostics UEFI settings, follow these steps:

1. Turn on or restart the computer, and when the HP logo appears, press f10 to enter Computer Setup.

2. Select **Advanced**, and then select **Settings**.

3. Make your customization selections.

4. Select **Main**, then select **Save Changes and Exit** to save your settings.

Your changes take effect when the computer restarts.

# 9 Using Setup Utility (BIOS)

Setup Utility, or Basic Input/Output System (BIOS), controls communication between all the input and output devices on the system (such as disk drives, display, keyboard, mouse, and printer). Setup Utility (BIOS) includes settings for the types of devices installed, the startup sequence of the computer, and the amount of system and extended memory.

**NOTE:** To start Setup Utility on convertible computers, your computer must be in notebook mode and you must use the keyboard attached to your notebook.

## Starting Setup Utility (BIOS)

You have several ways to access the Setup Utility (BIOS).

**IMPORTANT:** Use extreme care when making changes in Setup Utility (BIOS). Errors can prevent the computer from operating properly.

Use one of these options:

- Turn on or restart the computer and quickly press f10.
- Turn on or restart the computer, quickly press esc, and then press f10 when the Start menu is displayed.

## Updating Setup Utility (BIOS)

Updated versions of Setup Utility (BIOS) might be available on the HP website. Most BIOS updates on the HP website are packaged in compressed files called *SoftPaqs*. Some download packages contain a file named `Readme.txt`, which contains information regarding installing and troubleshooting the file.

**NOTE:** On select products, when an update to the BIOS is performed using a Softpaq, HP CMSL or Windows Update, the installation process copies files to the EFI partition on the operating system storage device. The EFI partition must be ≥300 MB for this process to successfully complete. If not using the HP image from the factory, users need to create an EFI partition ≥300 MB when installing the operating system.

### Determining the BIOS version

To decide whether you need to update Setup Utility (BIOS), first determine the BIOS version on your computer.

To reveal the BIOS version information (also known as *ROM date* and *System BIOS*), use one of these options.

- HP Support Assistant

  1. Perform one of these tasks:

     – Select the **Search** icon in the taskbar, type `support` in the search box, and then select the **HP Support Assistant** app.

– Select the question mark icon in the taskbar.

2. Under **My notebook**, select **Specifications**.

- Setup Utility (BIOS)

1. Start Setup Utility (BIOS) (see Starting Setup Utility (BIOS) on page 65).
2. Select **Main**, and then make note of the BIOS version.
3. Select **Exit**, select one of the options, and then follow the on-screen instructions.

- In Windows, press ctrl+alt+s.

To check for later BIOS versions, see Preparing for a BIOS update on page 66.

## Preparing for a BIOS update

Be sure to follow all prerequisites before downloading and installing a BIOS update.

**IMPORTANT:** To reduce the risk of damage to the computer or an unsuccessful installation, download and install a BIOS update only when the computer is connected to reliable external power using the HP AC adapter provided with the computer (select products only), a replacement AC adapter provided by HP, or an AC adapter with the power rating specified on the product label. Do not download or install a BIOS update while the computer is running on battery power, docked in an optional docking device, or connected to an optional power source. During the download and installation, follow these instructions:

- Do not disconnect power from the computer by unplugging the power cord from the AC outlet.
- Do not shut down the computer or initiate Sleep.
- Do not insert, remove, connect, or disconnect any device, cable, or cord.

**NOTE:** If your computer is connected to a network, consult the network administrator before installing any software updates, especially system BIOS updates.

### Downloading a BIOS update

After you review the prerequisites, you can check for and download BIOS updates.

1. Perform one of these tasks:
   - Select the **Search** icon in the taskbar, type `support` in the search box, and then select the **HP Support Assistant** app.
   - Select the question mark icon in the taskbar.
2. Select **Updates**. The **Checking for Updates** window opens, and Windows checks for updates.
3. Follow the on-screen instructions.
4. At the download area, follow these steps:
   a. Identify the most recent BIOS update and compare it to the BIOS version currently installed on your computer. If the update is more recent than your BIOS version, make a note of the date, name, or other identifier. You might need this information to locate the update later, after it has been downloaded to your hard drive.

b. Follow the on-screen instructions to download your selection to the hard drive.

   Make a note of the path to the location on your hard drive where the BIOS update is downloaded. You will need to access this path when you are ready to install the update.

## Installing a BIOS update

BIOS installation procedures vary. Follow any instructions that appear on the screen after the download is complete. If no instructions appear, follow these steps.

**NOTE:** On select products, when an update to the BIOS is performed using a Softpaq, HP CMSL or Windows Update, the installation process copies files to the EFI partition on the operating system storage device. The EFI partition must be ≥300 MB for this process to successfully complete. If not using the HP image from the factory, users need to create an EFI partition ≥300 MB when installing the operating system.

1. Select the **Search** icon in the taskbar, type `file` in the search box, and then select **File Explorer**.
2. Select your hard drive designation. The hard drive designation is typically Local Disk (C:).
3. Using the hard drive path you recorded earlier, open the folder that contains the update.
4. Double-click the file that has an .exe extension (for example, *filename*.exe).

   The BIOS installation begins.
5. Complete the installation by following the on-screen instructions.

**NOTE:** After a message on the screen reports a successful installation, you can delete the downloaded file from your hard drive.

# 10 Specifications

This chapter provides specifications for your computer system.

## Computer specifications

This section provides specifications for your computer. When you travel with your computer, the computer dimensions and weights, as well as input power ratings and operating specifications, provide helpful information.

**Table 10-1 Computer specifications**

| | Metric | U.S. |
|---|---|---|
| **Dimensions** | | |
| Width | **313.5 mm** | 12.34 in |
| Depth | **221.4 mm** | 8.72 in |
| Height (front) | **8.36 mm** | 0.33 in |
| Height (rear) | **12.4 mm** | 0.49 in |
| **Weight** | **1221 g** | 2.69 lbs |
| **Input power** | | |
| Operating voltage and current | 5 V DC @ 3 A / 9 V DC @ 3 A / 12 V DC @ 5 A / 15 V DC @ 4.33 A / 20 V DC @ 3.25 A - 65 W USB-C<br><br>5 V DC @ 3 A / 9 V DC @ 3 A / 10 V DC @ 5 A / 12 V DC @ 5 A / 15 V DC @ 4.33 A / 20 V DC @ 3.25 A - 65 W USB-C | |
| **Temperature** | | |
| Operating | **5°C to 35°C** | 41°F to 95°F |
| Nonoperating | **-20°C to 60°C** | -4°F to 140°F |
| **Relative humidity** (noncondensing) | | |
| Operating | 10% to 90% | |
| Nonoperating | 5% to 95% | |
| **Maximum altitude** (unpressurized) | | |
| Operating | **-15 m to 3048 m** | -50 ft to 10,000 ft |
| Nonoperating | **-15 m to 12,192 m** | -50 ft to 40,000 ft |

**NOTE:** Applicable product safety standards specify thermal limits for plastic surfaces. The device operates well within this range of temperatures.

# Display specifications

This section provides specifications for your display.

**Table 10-2 Display specifications**

| | Metric | U.S. |
|---|---|---|
| Active diagonal size | **35.6 cm** | 14.0 in |
| Resolution | 2880 × 1800 (2.8 K) | |
| Surface treatment | BrightView | |
| Brightness | 500 nits | |
| Viewing angle | UWVA | |
| Backlight | OLED | |
| Display panel interface | eDP | |

# 11 Statement of memory volatility

For general information regarding nonvolatile memory in HP business computers, and to restore nonvolatile memory that can contain personal data after the system has been turned off and the hard drive has been removed, use these instructions.

HP business computer products that use Intel®-based or AMD®-based system boards contain volatile DDR memory. The amount of nonvolatile memory present in the system depends upon the system configuration. Intel-based and AMD-based system boards contain nonvolatile memory subcomponents as originally shipped from HP, with the following assumptions:

- No subsequent modifications were made to the system.
- No applications, features, or functionality were added to or installed on the system.

Following system shutdown and removal of all power sources from an HP business computer system, personal data can remain on volatile system memory (DIMMs) for a finite period of time and also remains in nonvolatile memory. Use the following steps to remove personal data from the computer, including the nonvolatile memory found in Intel-based and AMD-based system boards.

**NOTE:** If your tablet has a keyboard base, connect to the keyboard base before beginning steps in this chapter.

## Current BIOS steps

Use these instructions to restore nonvolatile memory.

1. Follow these steps to restore the nonvolatile memory that can contain personal data. Restoring or reprogramming nonvolatile memory that does not store personal data is neither necessary nor recommended.

   a. Turn on or restart the computer, and then quickly press esc.

   **NOTE:** If the system has a BIOS administrator password, type the password at the prompt.

   b. Select **Main**, select **Apply Factory Defaults and Exit**, and then select **Yes** to load defaults. The computer restarts.

   c. During the restart, press esc while the "Press the ESC key for Startup Menu" message is displayed at the bottom of the screen.

   **NOTE:** If the system has a BIOS administrator password, type the password at the prompt.

   d. Select the **Security** menu, select **Restore Security Settings to Factory Defaults**, and then select **Yes** to restore security level defaults. The computer restarts.

   e. During the restart, press esc while the "Press the ESC key for Startup Menu" message is displayed at the bottom of the screen.

   **NOTE:** If the system has a BIOS administrator password, type the password at the prompt.

f. If an asset or ownership tag is set, select the **Security** menu and scroll down to the **Utilities** menu. Select **System IDs**, and then select **Asset Tracking Number**. Clear the tag, and then make the selection to return to the prior menu.

g. If a DriveLock password is set, select the **Security** menu, and scroll down to **Hard Drive Utilities** under the **Utilities** menu. Select **Hard Drive Utilities**, select **DriveLock**, and then clear the check box for **DriveLock password on restart**. Select **OK** to proceed.

h. Select the **Main** menu, and then select **Reset BIOS Security to factory default**. Select **Yes** at the warning message. The computer restarts.

i. During the restart, press esc while the "Press the ESC key for Startup Menu" message is displayed at the bottom of the screen.

**NOTE:** If the system has a BIOS administrator password, type the password at the prompt.

j. Select the **Main** menu, select **Apply Factory Defaults and Exit**, select **Yes** to save changes and exit, and then select **Shutdown**.

k. Restart the system. If the system has a TPM, fingerprint reader, or both, one or two prompts will appear—one to clear the TPM and the other to Reset Fingerprint Sensor. Press or tap f1 to accept or f2 to reject.

l. Remove all power and system batteries for at least 24 hours.

2. Complete one of the following tasks:

- Remove and retain the storage drive.
- Clear the drive contents by using a third-party utility designed to erase data from an SSD.
- Clear the contents of the drive by using the following BIOS Setup Secure Erase command option steps:

**NOTE:** If you clear data using Secure Erase, you cannot recover it.

a. Turn on or restart the computer, and then quickly press esc.

b. Select the **Security** menu and scroll down to the esc menu.

c. Select **Hard Drive Utilities**.

d. Finish by completing one of these tasks:

- Under **Utilities**, select **Secure Erase**, select the hard drive storing the data you want to clear, and then follow the on-screen instructions to continue.
- Clear the contents of the drive using the following Disk Sanitizer commands steps:

i. Turn on or restart the computer, and then quickly press esc.

ii. Select the **Security** menu and scroll down to the **Utilities** menu.

iii. Select **Hard Drive Utilities**.

iv. Under **Utilities**, select **Disk Sanitizer**, select the hard drive with the data that you want to clear, and then follow the on-screen instructions to continue.

**NOTE:** The amount of time it takes for Disk Sanitizer to run can be several hours. Plug the computer into an AC outlet before starting.

# Nonvolatile memory usage

Use this table to troubleshoot nonvolatile memory usage.

**Table 11-1 Troubleshooting information for nonvolatile memory usage**

| Description | Volatility description | Storage user data | How to erase |
|---|---|---|---|
| Primary storage device, holds the OS, applications, and application settings | Nonvolatile, 8-256 GB of eMMC or NVMe SSD storage, removable | Yes[1] | See Current BIOS steps on page 70 for information about erasing the primary storage device. |
| System memory (RAM), holds transient data during system operation | Volatile, SODIMM socket. Removable (4 GB/8 GB/16 GB) | Yes | Unplug unit from power. |
| Permanent system BIOS settings | Nonvolatile, 16 KB, stored | No[2] | See Current BIOS steps on page 70 for information about clearing BIOS settings. |
| System boot ROM (BIOS) | Nonvolatile, 128 Mbit (16 MB) socketed, removable | No | Download the latest BIOS for your model from the HP website and follow the instructions to flash the BIOS that are on the website. |
| RTC (CMOS) RAM | Volatile, 256 bytes located in AMD embedded System on Chip (SoC) | No | **Desktop computers with a CMOS button:**<br>Unplug unit from main power, remove top cover and press the **Clear CMOS** button.<br>**Notebook and desktop computers without a CMOS button:**<br>1. Press and hold power button for 12 seconds.<br>2. Press Windows key + V, and then press power button. |
| Keyboard/mouse (ROM) | Nonvolatile, 2 KB embedded in the super I/O controller (SIO2) | Yes | N/A |
| Keyboard/mouse (RAM) | Volatile, 256 bytes embedded in the super I/O controller (SIO2) | No | Unplug unit from main power. |
| LOM EEPROM | Nonvolatile, 2 MB embedded in LAN controller | No | N/A |
| TPM | Nonvolatile, 51 KB ROM for firmware and 38 KB system parametric data | No[3] | See Current BIOS steps on page 70 for information about clearing TPM. |

[1] Under typical operation, the only user data stored on the primary storage device are preferences for device configuration and settings for connections. However, the administrator can configure the system to allow users to store data locally.

[2] The only user data potentially stored in BIOS Settings are the ownership and asset tags, administrator password, and startup password.

[3] The TPM might contain encrypted passwords or certificates generated from user or administrator input.

# Questions and answers

Use this section to answer your questions about nonvolatile memory.

1. **How can the BIOS settings be restored (returned to factory settings)?**

**IMPORTANT:** The restore defaults feature does not securely erase any information on your hard drive. See question and answer 6 for steps to securely erase information.

The restore defaults feature does not reset the Custom Secure Boot keys. See question and answer 7 for information about resetting the keys.

   a. Turn on or restart the computer, and then quickly press esc.

   b. Select **Main**, and then select **Apply Factory Defaults and Exit**.

   c. Follow the on-screen instructions.

   d. Select **Main**, select **Save Changes and Exit**, and then follow the on-screen instructions.

2. **What is a UEFI BIOS?**

   The Unified Extensible Firmware Interface (UEFI) BIOS is an industry-standard software interface between the platform firmware and an operating system (OS). It replaces the older legacy BIOS architecture.

   The UEFI BIOS provides an interface to display the system information and configuration settings and to change the configuration of your computer before an OS is loaded. BIOS provides a secure runtime environment that supports a GUI. In this environment, you can use either a pointing device (touch screen, touchpad, pointing stick, or USB mouse) or the keyboard to navigate and make menu and configuration selections. The UEFI BIOS also contains basic system diagnostics.

   In addition, the UEFI BIOS works to initialize the computer's hardware before loading and executing the OS; the runtime environment allows the loading and execution of software programs from storage devices to provide more functionality, such as advanced hardware diagnostics (with the ability to display more detailed system information) and advanced firmware management and recovery software.

3. **Where is the UEFI BIOS located?**

   The UEFI BIOS is located on a flash memory chip. You must use a utility to write to the chip.

4. **What kind of configuration data is stored on the DIMM Serial Presence Detect (SPD) memory module? How would this data be written?**

The DIMM SPD memory contains information about the memory module, such as size, serial number, data width, speed and timing, voltage, and thermal information. This information is written by the module manufacturer and stored on an EEPROM. You cannot write to this EEPROM when the memory module is installed in a computer. Third-party tools do exist that can write to the EEPROM when the memory module is not installed in a computer. Various third-party tools are available to read SPD memory.

5. **What is meant by "Restore the nonvolatile memory found in Intel-based system boards"?**

   This message relates to clearing the Real Time Clock (RTC) CMOS memory that contains computer configuration data.

6. **How can the BIOS security be reset to factory defaults and erase the data?**

**IMPORTANT:** Resetting results in the loss of information.

These steps do not reset Custom Secure Boot Keys. See question and answer 7 for information about resetting the keys.

   a. Turn on or restart the computer, and then quickly press esc.

   b. Select **Main**, and then select **Reset Security to Factory Defaults**.

   c. Follow the on-screen instructions.

   d. Select **Main**, select **Save Changes and Exit**, and then follow the on-screen instructions.

7. **How can the Custom Secure Boot Keys be reset?**

   Secure Boot is a feature to ensure that only authenticated code can start on a platform. If you enabled Secure Boot and created Custom Secure Boot Keys, disabling Secure Boot does not clear the keys. You must also select to clear the Custom Secure Boot Keys. Use the same Secure Boot access procedure that you used to create the Custom Secure Boot Keys, but select to clear or delete all Secure Boot Keys.

   a. Turn on or restart the computer, and then quickly press esc.

   b. Select the **Security** menu, select **Secure Boot Configuration**, and then follow the on-screen instructions.

   c. At the **Secure Boot Configuration** window, select **Secure Boot**, select **Clear Secure Boot Keys**, and then follow the on-screen instructions to continue.

# Using HP Sure Start (select products only)

Select computer models are configured with HP Sure Start, a technology that monitors the computer's BIOS for attacks or corruption. If the BIOS becomes corrupted or is attacked, HP Sure Start automatically restores the BIOS to its previously safe state, without user intervention.

HP Sure Start is configured and already enabled so that most users can use the HP Sure Start default configuration. Advanced users can customize the default configuration.

To access the latest documentation on HP Sure Start, go to http://www.hp.com/support. Select **Find your product**, and then follow the on-screen instructions.

# 12 Power cord set requirements

This chapter provides power cord requirements for countries and regions.

The wide-range input feature of the computer permits it to operate from any line voltage from 100 V AC to 120 V AC, or from 220 V AC to 240 V AC.

The 3-conductor power cord set included with the computer meets the requirements for use in the country or region where the equipment is purchased.

Power cord sets for use in other countries or regions must meet the requirements of the country and region where the computer is used.

## Requirements for all countries

These power cord requirements are applicable to all countries and regions.

- The length of the power cord set must be at least **1.0 m** (3.3 ft) and no more than **2.0 m** (6.5 ft).
- All power cord sets must be approved by an acceptable accredited agency responsible for evaluation in the country or region where the power cord set will be used.
- The power cord sets must have a minimum current capacity of 10 A and a nominal voltage rating of 125 V AC or 250 V AC, as required by the power system of each country or region.
- The appliance coupler must meet the mechanical configuration of an EN 60 320/IEC 320 Standard Sheet C13 connector for mating with the appliance inlet on the back of the computer.

## Requirements for specific countries and regions

To determine power cord requirements for specific countries and regions, use this table.

**Table 12-1 Power cord requirements for specific countries and regions**

| Country/region | Accredited agency | Applicable note number |
|---|---|---|
| Argentina | IRAM | 1 |
| Australia | SAA | 1 |
| Austria | OVE | 1 |
| Belgium | CEBEC | 1 |
| Brazil | ABNT | 1 |
| Canada | CSA | 2 |
| Chile | IMQ | 1 |
| Denmark | DEMKO | 1 |
| Finland | FIMKO | 1 |
| France | UTE | 1 |
| Germany | VDE | 1 |

**Table 12-1 Power cord requirements for specific countries and regions (continued)**

| Country/region | Accredited agency | Applicable note number |
|---|---|---|
| India | BIS | 1 |
| Israel | SII | 1 |
| Italy | IMQ | 1 |
| Japan | JIS | 3 |
| Netherlands | KEMA | 1 |
| New Zealand | SANZ | 1 |
| Norway | NEMKO | 1 |
| The People's Republic of China | CCC | 4 |
| Saudi Arabia | SASO | 7 |
| Singapore | PSB | 1 |
| South Africa | SABS | 1 |
| South Korea | KTL | 5 |
| Sweden | SEMKO | 1 |
| Switzerland | SEV | 1 |
| Taiwan | BSMI | 6 |
| Thailand | TISI | 1 |
| United Kingdom | ASTA | 1 |
| United States | UL | 2 |

1. The flexible cord must be Type HO5VV-F, 3-conductor, 0.75 mm² conductor size. Power cord set fittings (appliance coupler and wall plug) must bear the certification mark of the agency responsible for evaluation in the country or region where it will be used.
2. The flexible cord must be Type SVT/SJT or equivalent, No. 18 AWG, 3-conductor. The wall plug must be a 2-pole grounding type with a NEMA 5-15P (15 A, 125 V AC) or NEMA 6-15P (15 A, 250 V AC) configuration. CSA or C-UL mark. UL file number must be on each element.
3. The appliance coupler, flexible cord, and wall plug must bear a T mark and registration number in accordance with the Japanese Dentori Law. The flexible cord must be Type VCTF, 3-conductor, 0.75 mm² or 1.25 mm² conductor size. The wall plug must be a 2-pole grounding type with a Japanese Industrial Standard C8303 (7 A, 125 V AC) configuration.
4. The flexible cord must be Type RVV, 3-conductor, 0.75 mm² conductor size. Power cord set fittings (appliance coupler and wall plug) must bear the CCC certification mark.
5. The flexible cord must be Type H05VV-F 3-conductor, 0.75 mm² conductor size. KTL logo and individual approval number must be on each element. Approval number and logo must be printed on a flag label.
6. The flexible cord must be Type HVCTF 3-conductor, 1.25 mm² conductor size. Power cord set fittings (appliance coupler, cable, and wall plug) must bear the BSMI certification mark.

7. For 127 V AC, the flexible cord must be Type SVT or SJT 3-conductor, 18 AWG, with plug NEMA 5-15P (15 A, 125 V AC), with UL and CSA or C-UL marks. For 240 V AC, the flexible cord must be Type H05VV-F 3-conductor, 0.75 mm² or 1.00 mm² conductor size, with plug BS 1363/A with BSI or ASTA marks.

# 13 Swelling or deformation of notebook battery

To protect your hardware from potential damage, HP recommends that if you are experiencing battery swelling, stop using the notebook until you can replace the battery.

You can contact HP to understand what battery replacement options are available. To learn more about lithium-ion batteries and the factors that can accelerate battery swelling, see https://support.hp.com/us-en/document/ish_6824662-6824706-16.

## Swollen notebook batteries

You might notice that your notebook battery has become somewhat deformed or swollen over time. In some cases, the battery swelling might be significant enough to impact other components of the system including the touchpad, keyboard, and chassis.

### Swollen battery is not a safety issue

A swollen battery does not present a safety issue. It is the result of the generation of gases per the normal degradation of the battery cell over time.

HP has worked closely with our battery cell suppliers and third-party industry experts to help minimize the potential for HP batteries to swell over time and to identify that swollen batteries are not a safety issue.

### Discontinue using a swollen battery

To protect your hardware from potential damage, HP recommends that, if you are experiencing battery swelling, you stop using the notebook until the battery can be replaced.

You can contact https://www.hp.com/go/contacthp to understand what battery replacement options are available.

### Replace a swollen battery

If a battery is under warranty, HP will replace the battery per the terms and conditions of the HP Worldwide Limited Warranty or applicable HP Care Packs.

For batteries no longer under warranty, contact HP to purchase a genuine HP replacement battery.

## Minimize battery swelling

Multiple factors can accelerate battery swelling.

To help mitigate battery swelling over time, you can use either HP Adaptive Battery Optimizer (consumer notebooks) or HP Battery Health Manager (commercial notebooks) settings to improve battery longevity and performance for various use scenarios.

## Adaptive Battery Optimizer (consumer notebooks)

Adaptive Battery Optimizer technology can help mitigate the factors that cause the battery to swell. It is available on select HP OMEN, HP Spectre, HP Pavilion, and HP ENVY notebook computers.

Adaptive Battery Optimizer has been available on select gaming notebooks since 2019 and select consumer notebooks since 2020. To learn more about enabling Adaptive Battery Optimizer on your HP notebook, see https://support.hp.com/us-en/document/ish_9908083-9908127-16.

## HP Battery Health Manager (commercial notebooks)

HP Battery Health Manager provides an easy-to-manage solution to help mitigate factors that cause the battery to swell. It is available on select HP ProBook and HP EliteBook notebook computers.

HP Battery Health Manager is available on select commercial notebooks manufactured since 2016. To learn more about HP Battery Health Manager, see https://support.hp.com/us-en/document/ish_4449597-3519507-16.

# 14 Recycling

When a nonrechargeable or rechargeable battery has reached the end of its useful life, do not dispose of the battery in general household waste. Follow the local laws and regulations in your area for battery disposal.

HP encourages customers to recycle used electronic hardware, HP original print cartridges, and rechargeable batteries. For more information about recycling programs, see the HP website at http://www.hp.com/recycle.

# Index


### A

AC adapter and battery light, identifying 5
AC adapters, spare part numbers 17
action key, identifying 10
audio-out (headphone)/audio-in (microphone) combo jack, identifying 4
audio, product description 1

### B

backup, creating 56
backups 56
battery
  illustrated 14
  spare part number 14
battery swelling 78
BIOS
  determining version 65
  downloading an update 66, 67
  starting the Setup Utility 65
  updating 65
Bluetooth label 12
boot order, changing 58
bottom components 11
bottom cover
  illustrated 14
  removal 27
  spare part number 14, 27
buttons
  left touchpad 8
  power 11
  right touchpad 8

### C

camera
  identifying 7
  illustrated 16
  spare part number 16
camera light, identifying 7
camera privacy cover, identifying 7
caps lock light 9
caring for your computer 23
cautions
  electrostatic discharge 19, 20
cleaning your computer 23
  caring for wood veneer 25
  disinfecting 24
  HP Easy Clean 23
  removing dirt and debris 23
components
  bottom 11
  display 5, 6
  keyboard area 7
  left side 5
  lights 8
  right side 4
  touchpad 7, 8
computer major components 13
computer specifications 68
connectors
  power 5
control zone 8

### D

display
  specifications 68, 69
display assembly
  subcomponents 15
display back cover
  illustrated 16
  spare part number 16
display cable
  illustrated 16
  spare part number 16
display components 5, 6
display panel
  illustrated 16
  product description 1
  spare part number 16
dual action keys, identifying 10

### E

electrostatic discharge (ESD) 19, 20
  preventing damage 19-21
esc key, identifying 10

### F

fan
  illustrated 14
  removal 43
  spare part number 14, 43
fn key, identifying 10

### G

graphics, product description 1
grounding methods 19-21
guidelines
  packaging 19, 25
  transporting 19, 25
  workstation 19

### H

hard drive
  product description 1
  specifications 68
heat sink
  removal 44
  spare part numbers 44
hinge
  illustrated 16
  spare part number 16
HP PC Hardware Diagnostics UEFI
  downloading 62
  failure ID code 61
  HP Hotkey Support software 62
  starting 61, 62
  using 61
HP PC Hardware Diagnostics Windows
  accessing 59, 60
  downloading 60
  failure ID code 59
  installing 61
  using 59
HP Recovery media recovery 57
HP Sure Recover 58
HP Sure Start 70

### I

I/O board
  illustrated 14
  removal 41
  spare part number 14, 41

I/O board cable
  I/O board cable
    illustrated 14
  spare part number 14
illustrated parts catalog 13
internal microphones,
  identifying 6

## J

jacks
  audio-out (headphone)/audio-in
    (microphone) 4

## K

keyboard
  product description 2
  spare part number 53
keys
  action 10
  dual action 10
  esc 10
  fn 10
  Windows 10
  Windows Copilot 10

## L

labels
  Bluetooth 12
  regulatory 12
  serial number 12
  service 12
  wireless certification 12
  WLAN 12
left control zone, identifying 8
left side components 5
lights
  AC adapter and battery 5
  camera 7
  caps lock 9
  microphone mute 9
  mute 9
  power 9
  touchpad 8
low blue light mode 6

## M

memory
  nonvolatile 70
  volatile 70
memory module
  product description 1
microphone
  product description 1
microphone mute light,
  identifying 9
mute light, identifying 9

## N

nonvolatile memory 70

## O

operating system, product
  description 3

## P

packaging guidelines 19, 25
pointing device, product
  description 2
ports
  product description 2
  USB 4, 5
  USB Type-C power connector
    and port with HP Sleep and
    Charge and DisplayPort
    output 5
power button, identifying 11
power connector
  identifying 5
power cord
  requirements for all
    countries 75
  requirements for specific
    countries and regions 75
  set requirements 75
power cords, spare part
  numbers 17
power light, identifying 9
power requirements, product
  description 2
primary storage
  product description 1
processor
  product description 1
product description
  audio 1
  display panel 1
  graphics 1
  hard drive 1
  keyboard 2
  memory module 1
  microphone 1
  operating system 3
  pointing device 2
  ports 2
  power requirements 2
  primary storage 1
  processors 1
  security 3
  serviceability 3
  solid-state drive 1
  video 1
  wireless 2
product name and number,
  computer 12

## R

recovery 56
  discs 57
  media 57
  USB flash drive 57
recovery media 56
  creating using HP Cloud
    Recovery Download
    Tool 56
  creating using Windows
    tools 56
regulatory information
  regulatory label 12
  wireless certification labels 12
Remote HP PC Hardware
  Diagnostics UEFI settings
  customizing 64
  using 63
removal and replacement
  procedures 27, 38
  solid-state drive 38
removing personal data from
  volatile system memory 70
restoring 56
restoring and recovery
  methods 57
right control zone, identifying 8
right side components 4

## S

Screw Kit, spare part number 17
security, product description 3
serial number, computer 12
service labels, locating 12
serviceability, product
  description 3
solid-state drive
  illustrated 14
  product description 1
  removal and replacement 38
  spare part number 14
speaker 14
  removal 39
  spare part number 14
  spare part numbers 39

speakers 11
special keys
identifying 9
using 9
specifications
computer 68
display 68, 69
hard drive 68
static electricity 19, 20
support information 25
Sure Start
using 74
swelling or deformation of
notebook battery 78
system board
illustrated 14
removal 45
spare part number 14
spare part numbers 45
system memory, removing personal
data from volatile 70
system restore 57
system restore point, creating 56

## T

top cover
illustrated 14
spare part number 14, 53
touchpad
illustrated 14
removal 40
settings 7, 8
spare part number 14
spare part numbers 40
touchpad buttons
identifying 8
touchpad components 7
touchpad light, identifying 8
touchpad settings, adjusting 7
touchpad zone, identifying 8
transporting guidelines 19, 25
traveling with the computer 12

## U

USB port, identifying 4, 5
USB Type-C power connector and
port with HP Sleep and Charge
and DisplayPort output,
identifying 5

## V

vents, identifying 12
video, product description 1

## W

wake-on-voice 6
Windows
backup 56
recovery media 56
system restore point 56
Windows Copilot key,
identifying 10
Windows key, identifying 10
Windows tools, using 56
wireless antennas
illustrated 16
spare part number 16
wireless antennas, identifying 6
wireless certification label 12
wireless, product description 2
WLAN antennas, identifying 6
WLAN device 12
WLAN label 12
workstation guidelines 19