Overview

HP Z6 G5 A Workstation

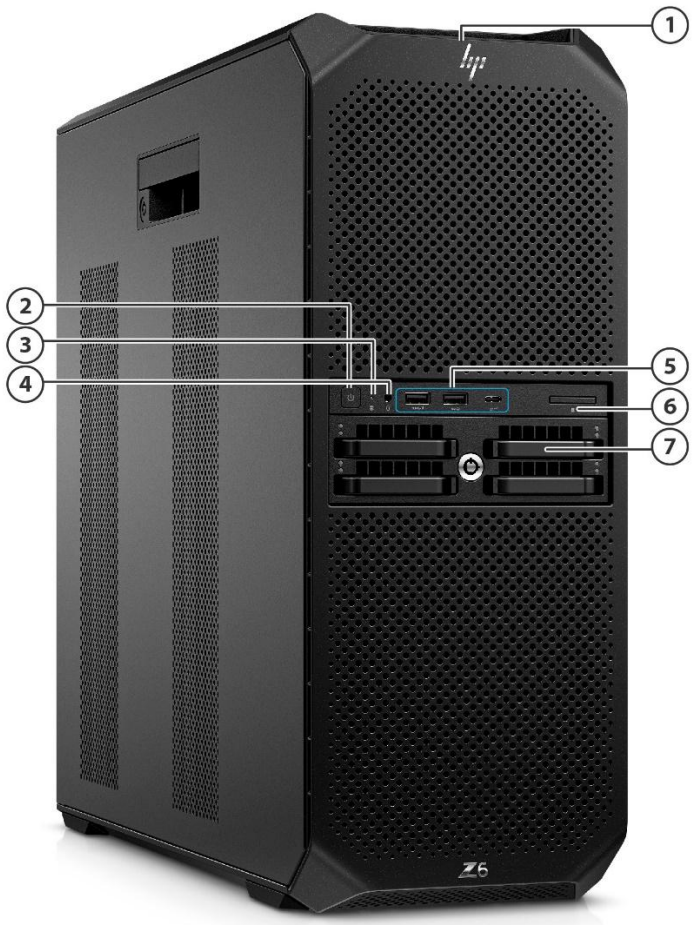

Front View

1. Integrated Front Handle
2. Power Button
3. HDD Activity Light
4. CTIA Headset Jack
5. Front I/O Premium:
   1 USB 3.2 Gen2x2 Type-C®, 2 USB 3.1 Gen1 Type-A (left-most Type-A port has Charging Capability)[1]

   Front I/O Entry:
   4 USB 3.1 Gen1 Type-A (left-most Type-A port has Charging Capability)
6. SD Card Reader
7. 1 External 5.25" bay

[1]Premium Front IO is shown on photography

Overview

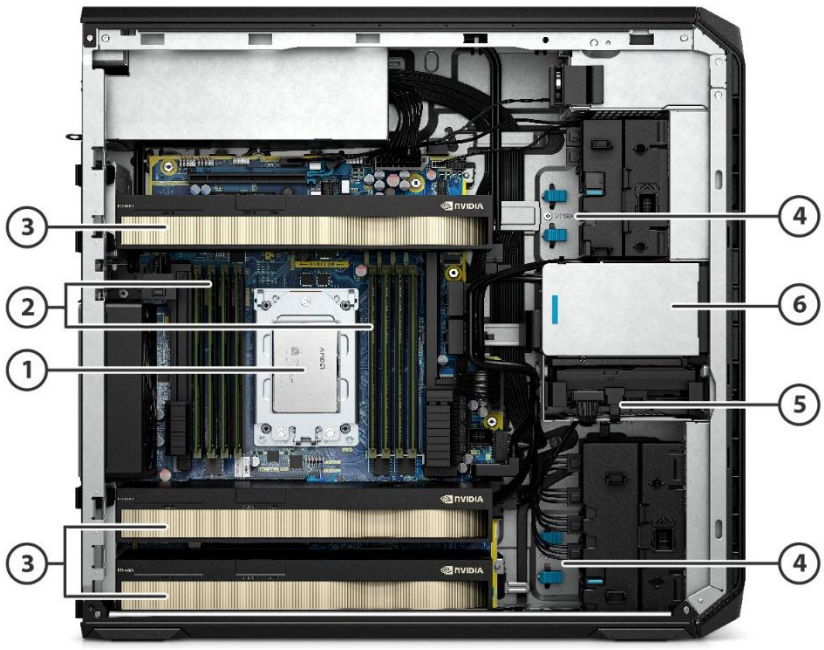

Internal View

1. 1 AMD Ryzen™ Threadripper™ PRO 7000WX Series Processor
2. 8 DIMM slots for DDR5 ECC Memory
3. • Slot 1: PCIe Gen5 x16
   • Slot 2: PCIe Gen5 x16
   • Slot 3: Mechanical
   • Slot 4: PCIe Gen5 x16
   • Slot 5: PCIe Gen5 x16
   • Slot 6: PCIe Gen4 x16
   • Slot 7: PCIe Gen4 x4
4. 4 internal onboard M.2 SSDs (2 PCIe x4 Gen5 and 2 PCIe x4 Gen4 system board connections)
5. 1 Internal 3.5" bay
6. 1 External 5.25" bay

Note: Not shown in photography:
- 2x internal NVMe connectors to front removable M.2 carrier
- 2x internal USB Ports (1x single USB2.0 port, 1x USB3.0 port for SD card reader)
- 2x SATA ports

Overview

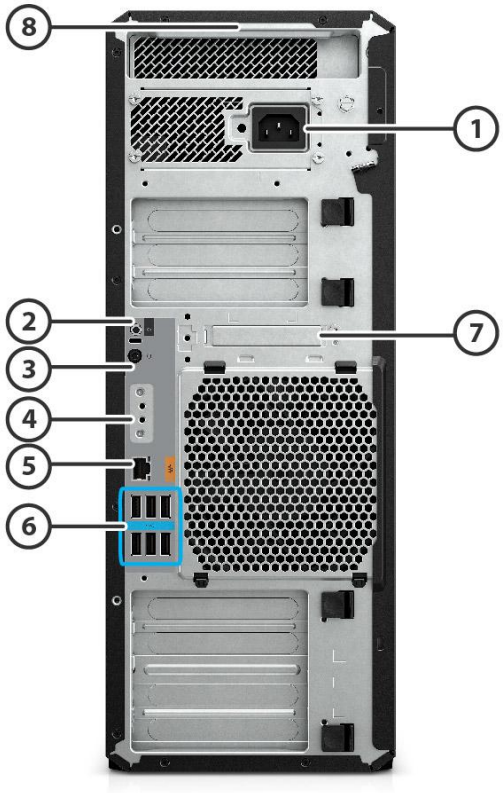

Rear View

1. Choice of 775W, 1125W/1275W or 1450W, 90% Efficient Power Supplies
2. Rear Power Button
3. Universal Audio Jack
4. Flex I/O Module (optional)
5. 1xRJ-45 integrated LAN port (1 GbE DASH)
6. 6 SuperSpeed USB3.2 Gen1 Type-A 5 Gbps signaling rate
7. 2x10GbE LAN ports (optional)
8. Integrated Rear Handle

Overview

Form Factor

Tower

Operating Systems

Preinstalled:

- Windows 11 Pro High End[2]
- Ubuntu 22.04 LTS[4]
- HP Linux®-ready (minimal OS ready for customer OS installation)[5]

License Only:

- Red Hat® Enterprise Linux® Desktop Workstation (includes paper license with 1 year support; no preinstalled OS)[6]

Supported:

- Windows 10 Pro for Workstations[2]
- Red Hat® Enterprise Linux® Workstation 8 & 9 [6]
- Ubuntu 22.04 LTS[5]

Operating System Design Behavior:

-Memory and rear chassis fans will spin at lowest achievable speed when unit enters into Sleep Mode. This is by engineering design to cool the higher wattage of DDR5 ECC memory. This allows the memory to stay within thermal specifications.

[2] Not all features are available in all editions or versions of Windows. Systems may require upgraded and/or separately purchased hardware, drivers, software or BIOS update to take full advantage of Windows functionality. Windows is automatically updated and enabled. High speed internet and Microsoft account required. ISP fees may apply and additional requirements may apply over time for updates. See http://www.windows.com.
[4] Not all features are available in all editions or versions of Ubuntu. Systems may require upgraded and/or separately purchased hardware, drivers, software or BIOS to take full advantage of Ubuntu functionality. Ubuntu may be automatically updated. ISP fees may apply and additional requirements may apply over time for updates.
[5]A certified preloaded version of Ubuntu® 20.04 LTS is available from HP for this platform. Not all features are available in all editions or versions of Ubuntu. Systems may require upgraded and/or separately purchased hardware, drivers, software or BIOS to take full advantage of Ubuntu functionality. Ubuntu may be automatically updated. ISP fees may apply, and additional requirements may apply over time for upgrades.
[6]For detailed Linux® OS/hardware support information, see:
http://www.hp.com/support/linux_hardware_matrix

NOTE: Your product does not support Windows 8 or Windows 7. In accordance with Microsoft's support policy, HP does not support the Windows® 8 or Windows 7 operating system on products configured with Intel® and AMD® 7th generation and forward processors or provide any Windows® 8 or Windows 7 drivers on http://www.support.hp.com. A full list of HP products and the Windows 10 versions tested is available on the HP support website. https://support.hp.com/us-en/document/c05195282

Overview

Processors

Name[1]	Cores	Frequency (GHz)		L3 Cache (MB)	Memory Speed (MT/s)	TDP (W)
		Base Clock Speed	Boost Technology			
AMD Ryzen™ Threadripper™ PRO 7995WX	96	2.5	5.1	384	5200	350
AMD Ryzen™ Threadripper™ PRO 7985WX	64	3.2	5.1	256	5200	350
AMD Ryzen™ Threadripper™ PRO 7975WX	32	4.0	5.3	128	5200	350
AMD Ryzen™ Threadripper™ PRO 7965WX	24	4.2	5.3	128	5200	350
AMD Ryzen™ Threadripper™ PRO 7955WX	16	4.5	5.3	64	5200	350
AMD Ryzen™ Threadripper™ PRO 7945WX	12	4.7	5.3	64	5200	350

Note:
- AMD Ryzen™ Threadripper™ PRO 7000WX Series processors do not offer integrated graphics
- AMD Ryzen™ Threadripper™ PRO 7000WX Series processors support ECC memory

[1] Multicore is designed to improve performance of certain software products. Not all customers or software applications will necessarily benefit from use of this technology. Performance and clock frequency will vary depending on application workload and your hardware and software configurations. AMD's numbering is not a measurement of clock speed.

Overview

Color	Black
Convertibility	No
Expansion Slots (see system board section for more details)	• Slot 1: PCIe Gen5 x16 • Slot 2: PCIe Gen5 x16 • Slot 3: Mechanical • Slot 4: PCIe Gen5 x16 • Slot 5: PCIe Gen5 x16 • Slot 6: PCIe Gen4 x16 • Slot 7: PCIe Gen4 x4
Expansion Bays (see storage section for more details)	1x internal 3.5" bays (includes acoustic damping rail assembly) 1x external 5.25" bays (175mm depth limit)
Front I/O	Front I/O Premium: 1x SuperSpeed USB Type-C® 20 Gbps signaling rate (USB Power Delivery 3.0), 2x SuperSpeed USB Type-A 5 Gbps signaling rate, 1x headphone/microphone combo, SD card reader (optional). [left-most Type-A ports supports BC1.2 (Battery Charging)] Front I/O Entry: 4x SuperSpeed USB Type-A 5 Gbps signaling rate, 1x CTIA headset jack, SD card reader (optional). [left-most Type-A ports supports BC1.2 (Battery Charging)]
Internal I/O [5]	2 USB ports and 2 SATA ports.
Rear I/O	1x Universal Audio Jack, 6x SuperSpeed USB Type-A 5 Gbps signaling rate, 1x RJ-45 integrated LAN port (1 GbE, DASH), 2x10GbE Network Module (optional), Flex I/O (optional)
On-board RAID Support	RAID 0 Striped Array RAID 1 Mirrored Array RAID 10 Striped/Mirrored RAID 5 Parity Array (See System Board section for further details and configuration options)
Chassis Dimensions (H x W x D)	Footprint: H: 17.5" [444.5 mm] W: 6.65" [169 mm] D: 18.3" [465 mm] (measured to the rear panel) Maximum: H: 17.5" [444.5 mm] W: 6.65" [169 mm] D: 18.51" [470.2 mm] (measured to the rear system fan)
Packaged Dimensions	H: 24.0" [630mm] W: 12.3" [313mm] D: 23.3" [593mm]
Palletization Profile	6 units x 3 layers = 18 units per pallet 1200x1000x1836mm (pallet included)
Rack Dimensions	4U
Weight	Exact weights depend upon configuration (System weight only). Minimum: 13.2.4kg (29.1lbs.) Typical: 14.8kg (32.6lbs.) Maximum: 23.1kg (50.9lbs.)
Power Supply	Choice of 80 Plus Gold (90% efficiency at 50% load) Power Supplies: • **1450W @230V (Delta Efficiency Report)** • **1125W/1275W @110V (Delta Efficiency Report)** • **775W @230V (Delta Efficiency Report)** • **775W @110V (Delta Efficiency Report)** • **775W @230V (LiteOn Efficiency Report)** • **775W @110V (LiteOn Efficiency Report)**

Overview

NOTE: not all configurations are supported on all power supplies. Configuration support depends on total system power budget and having sufficient number or type of PCIe supplemental power connectors. Confirm power supply and configuration support using configurator on hp.com.

- 1450W supports up to 900W of auxiliary graphics power (dependent on system configuration)
- 1125W/1275W supports up to 600W of auxiliary graphics power (dependent on system configuration)
- 775W supports up to 230W of auxiliary graphics power (dependent on system configuration)

NOTE: updating graphics after purchase may require additional power distribution cables and/or auxiliary graphics adapters to support the new graphics configuration.

Workstation ISV Certifications	See the latest list of certifications at http://www.hp.com/united-states/campaigns/workstations/partnerships.html
Chipset	AMD PRO 695 Chipset
Memory	8 DIMM slots, supporting up to 1TB, DDR5 5200 MT/s speed depending on the system configuration

Supported Components

Processors	Factory Configured	Option Kit	Option Kit Part Number	Support Notes
AMD Ryzen™ Threadripper™ PRO 7995WX	Y	N		
AMD Ryzen™ Threadripper™ PRO 7985WX	Y	N		
AMD Ryzen™ Threadripper™ PRO 7975WX	Y	N		
AMD Ryzen™ Threadripper™ PRO 7965WX	Y	N		
AMD Ryzen™ Threadripper™ PRO 7955WX	Y	N		
AMD Ryzen™ Threadripper™ PRO 7945WX	Y	N		

SATA Hard Drives	Factory Configured	Option Kit	Option Kit Part Number
1TB 7200 SATA 3.5" HDD	Y	Y	
1TB 7200 SATA 3.5" Enterprise HDD	Y	Y	W0R10AA
2TB 7200RPM SATA 3.5in Enterprise HDD	Y	Y	2Z274AA
4TB 7200 RPM SATA 3.5in Enterprise HDD	Y	Y	K4T76AA/AT
8TB 7200RPM SATA 3.5in Enterprise HDD	Y	Y	2Z273AA
12TB 7200 RPM SATA-6G 3.5in Enterprise HDD	Y	Y	5S461AA
HP 2.5in to 3.5in HDD Adapter Kit	N	Y	J5T63AA
HP 3.5in to 5.25in HDD Adapter Kit	N	Y	NQ099AA

NOTE: Starting November 1, 2023, HP PCs with Windows require Windows to be installed on SSD. HDD can only be configured as additional data drives and not as the boot drive.

NOTE: For internal bay install, HDD option kits require separate purchase of 74Y88AA HP Z6 A HDD Cable Kit.

NOTE: For storage drives, GB = 1 billion bytes. TB = 1 trillion bytes. Actual formatted capacity is less. Up to 35GB of system disk (for Windows) is reserved for system recovery software.

PCIe Solid State Drives	Factory Configured	Option Kit	Option Kit Part Number
Z Turbo 512GB PCIe-4x4 2280 TLC M.2 SSD Module[4]	Y	Y	38T80AA
Z Turbo 512GB PCIe-4x4 2280 SED OPAL2 TLC M.2 SSD Module[4]	Y	Y	38T81AA
Z Turbo 512GB PCIe-4x4 2280 TLC Z4/Z6 Kit SSD[3]	N	Y	56Q73AA
Z Turbo 512GB PCIe-4x4 2280 SED OPAL2 TLC M.2 Z4/Z6 Kit SSD[3]	N	Y	56Q74AA
Z Turbo 1TB PCIe-4x4 2280 TLC SSD Module[4]	Y	Y	38T77AA
Z Turbo 1TB PCIe-4x4 2280 SED OPAL2 TLC M.2 SSD Module[4]	Y	Y	38T76AA
Z Turbo 1TB PCIe-4x4 2280 TLC Z4/Z6 Kit SSD[3]	N	Y	56Q75AA
Z Turbo 1TB PCIe-4x4 2280 SED OPAL2 TLC M.2 Z4/Z6 Kit SSD[3]	N	Y	5Z7E7AA
Z Turbo 2TB PCIe-4x4 2280 TLC SSD Module[4]	Y	Y	38T75AA
Z Turbo 2TB PCIe-4x4 2280 SED OPAL2 TLC M.2 SSD Module[4]	Y	Y	38T79AA
Z Turbo 2TB PCIe-4x4 2280 SED OPAL2 TLC M.2 Z4/Z6 Kit SSD[3]	N	Y	56Q77AA
Z Turbo 4TB PCIe-4x4 2280 TLC M.2 SSD Module[4]	Y	Y	5S496AA/AT

Supported Components

Z Turbo 4TB PCIe-4x4 2280 SED OPAL2 TLC M.2 SSD Module[4]	Y	Y	5S497AA/AT
Z Turbo 4TB PCIe-4x4 2280 SED OPAL2 TLC M.2 Z4/Z6 Kit SSD[3]	N	Y	5S4A1AA
HP Z Turbo Drive Quad Pro			
HP Z Turbo Drive Quad Pro PCIe-4x4 NVMe Carrier[1]	Y	Y	7H9Z3AA
HP Z Turbo Drive Quad Pro 512GB TLC SSD	Y	N	
HP Z Turbo Drive Quad Pro 1TB TLC SSD	Y	N	
HP Z Turbo Drive Quad Pro 2TB TLC SSD	Y	N	
HP Z Turbo Drive Quad Pro 4TB TLC SSD	Y	N	
HP Z Turbo Drive Dual Pro			
HP Z Turbo Drive Dual Pro PCIe-4x4 NVMe Carrier[2]	Y	Y	56Q86AA
HP Z Turbo Drive Dual Pro 512GB TLC SSD	Y	N	
HP Z Turbo Drive Dual Pro 1TB TLC SSD	Y	N	
HP Z Turbo Drive Dual Pro 2TB TLC SSD	Y	N	
HP Z Turbo Drive Dual Pro 4TB TLC SSD	Y	N	

Note 1: Kit includes dual pro carrier and heatsink. Requires separate purchase of Z Turbo PCIe 4x4 M.2 SSD modules.
Note 2: Kit includes quad pro carrier and heatsink. Requires separate purchase of Z Turbo PCIe 4x4 M.2 SSD modules.
Note 3: Includes a heatsink.
Note 4: Does not include a heatsink.

NOTE: For storage drives, GB = 1 billion bytes. TB = 1 trillion bytes. Actual formatted capacity is less. Up to 35GB of system disk (for Windows) is reserved for system recovery software.

Graphics		Factory Configured	Option Kit	Option Kit Part Number	Supported # of cards
Graphics Cable Adapters	HP DisplayPort to HDMI Adapter	Y	Y	2JA63AA	
	HP DisplayPort to DVI Adapter (Bulk 90)	N	Y	FH973A6	
	HP DisplayPort to VGA Adapter	N	Y	AS615AA/AT	
	HP DisplayPort to VGA Adapter	N	Y	F7W97AA	
	HP miniDP-to-DP Adapter Cable (single)	Y	Y	2MY05AA	
	HP miniDP-to-DP Adapter Cable (2-pack)	Y	N		
	HP miniDP-to-DP Adapter Cable (4-pack)	Y	N		
	HP miniDP-to-DP Adapter Cable (8-pack)	Y	N		
	HP miniDP-to-DP Adapter Cable (Bulk 12)	N	Y	2KW87A6	
	HP Graphics Power Cable CPU-8p to CPU-8p [4]	N	Y	6J6H7AA	
	HP Graphics Power Cable CPU-8p to x2 PCIe 8p(6+2)[4]	N	Y	6J6H8AA	
	NVIDIA 3D Stereo Bracket	N	Y	K0A25AA	
	NVIDIA Quadro Sync II	N	Y	1WT20AA	
Ultra High-End Graphics	NVIDIA® A800 40 GB Graphics[7]	Y	Y	8D6C0AA	2
	NVIDIA® RTX A6000 48 GB 4DP Graphics	N	Y	2S6U3AA	
	NVIDIA® RTX 6000 Ada 48GB [1,3]	Y	Y	79C23AA	3
	NVIDIA® RTX 6000 Ada 48 GB 4DP w/NVIDIA	N	Y	9X3E1AA	3

Supported Components

	Omniverse Enterprise Graphics[1,3]				
	AMD® Radeon™ Pro W7900 48GB [1,8]	Y	Y	8F699AA	1
	NVIDIA® RTX 5000 Ada 24GB [1]	Y	Y	8D6B6AA	3
	NVIDIA Quadro Sync II	N	Y	1WT20AA	
High-End Graphics	NVIDIA® RTX 4500 Ada 24 GB	Y	Y	8D6C1AA	3
	NVIDIA® RTX A4500 20GB [1]	Y	Y	5S458AA/AT	3
	NVIDIA® RTX 4000 Ada 16GB [1,5]	Y	Y	8D6B7AA	3
	NVIDIA® RTX A4000 16GB [1,5]	Y	Y	20X24AA/AT	3
	NVIDIA® RTX 2000 Ada 16 GB	Y	Y	8D6B8AA	3
	NVIDIA® RTX A2000 12GB [1]	Y	Y	5Z7D9AA/AT	3
Mid-range Graphics	NVIDIA® RTX A1000 8 GB 4mDP Graphics	Y	Y	9U276AA	3
	NVIDIA® T1000 8GB [2]	Y	Y	5Z7D8AA/AT	3
	AMD® Radeon™ Pro W7600 8GB [1]	Y	Y	8D6B9AA	3
	AMD® Radeon™ Pro W7500 8GB [1]	Y	Y	8D6C2AA	3
Entry Graphics	NVIDIA® RTX A400 4 GB 4mDP Graphics [2]	Y	Y	9U277AA	2
	NVIDIA® T400 4GB [2]	Y	Y	5Z7E0AA/AT	3
	AMD® Radeon™ RX 6400 4GB	Y	Y	6Q3U4A	1

Note 1: Single, dual, or triple graphics configurations require the HP Z6 Fan and Front Card Guide. If configured as an after-market option, a separate purchase of the HP Z6 Fan and Front Card Guide 56Q80AA is required. If factory configured, the fan and front card guide is included.
Note 2: Dual or triple graphics configurations require the HP Z6 Fan and Front Card Guide. If configured as an after-market option, a separate purchase of the HP Z6 Fan and Front Card Guide 56Q80AA is required. If factory configured, the fan and front card guide is included.
Note 3: Triple graphics configuration requires the HP Z6 PCIe Retainer with Fans. If configured as an after-market option, a separate purchase of the HP Z6 PCIe Retainer with Fans 56Q85AA is required. If factory configured, the PCIe retainer with fans is included.
Note 4: Required for select graphics configurations.
Note 5: Only supported with 1125W/1275W and 1450W PSUs
Note 6: Not available at launch; available early 2024
Note 7: The NVIDIA® A800 is meant for GPU compute and does not have video outputs. A graphics card must be configured in addition with the A800.
Note 8: AMO kit support expected June 2024.

Memory	**Factory Configured**	**Option Kit**	**Option Kit Part Number**	**Support Notes**
32GB (2x16GB) DDR5 5600 DIMM ECC REG Memory	Y	N		
64GB (4x16GB) DDR5 5600 DIMM ECC REG Memory	Y	N		
64GB (2x32GB) DDR5 5600 DIMM ECC REG Memory[2]	Y	N		
128GB (8x16GB) DDR5 5600 DIMM ECC REG Memory[2]	Y	N		
128GB (4x32GB) DDR5 5600 DIMM ECC REG Memory[2]	Y	N		
256GB (8x32GB) DDR5 5600 DIMM ECC REG Memory[2]	Y	N		
256GB (4x64GB) DDR5 5600 DIMM ECC REG Memory[2]	Y	N		
256GB (2x128GB) DDR5 5600 DIMM ECC REG Memory[1,2]	Y	N		
512GB (8x64GB) DDR5 5600 DIMM ECC REG Memory[2]	Y	N		
512GB (4x128GB) DDR5 5600 DIMM ECC REG Memory[1,2]	Y	N		

Supported Components

1TB (8x128GB) DDR5 5600 DIMM ECC REG Memory[1,2]	Y	N	
After Market Options			
16GB (1x16GB) DDR5 5600 DIMM ECC REG Memory	Y	Y	760N2AA
32GB DDR5 (1x32GB) 5600 DIMM ECC REG Memory[2]	N	Y	760R7AA
64GB DDR5 (1x64GB) 5600 DIMM ECC REG Memory[2]	N	Y	760R8AA
128GB (1x128GB) DDR5 5600 DIMM ECC REG Memory[1,2]	N	Y	760R9AA

Note 1: This memory configuration requires the 1125W/1275W/1450W PSU
Note 2: Configurations with 32GB DIMMs or greater come with memory fan installed
Note: The CPUs determine the speed at which the memory is clocked. For example, if a 4800MHz capable CPU is used in the system, the maximum speed the memory will run at is 4800MHz regardless of the specified speed of the memory.

Multimedia and Audio Devices	Factory Configured	Option Kit	Option Kit Part Number
Poly Savi 8210/8220 Universal Power Supply - 9V 500mA	N	Y	783M9AA
Poly Savi 7310 Headset	N	Y	783N0AA
Poly Savi 7320 Headset	N	Y	783N1AA
Poly Savi 7310 Headset (Teams)	N	Y	783N2AA
Poly Savi 7320 Headset (Teams)	N	Y	783N3AA
Poly Savi 7210 Headset	N	Y	783Q5AA
Poly Savi 7220 Headset	N	Y	783Q6AA
Poly BT700 USB-A Bluetooth Adapter	N	Y	786C4AA
Poly BT700 USB-C Bluetooth Adapter	N	Y	786C5AA
Poly DA75 USB to QD Adapter	N	Y	786C6AA
Poly DA85 USB to QD Adapter	N	Y	786C7AA
Poly DA85-M USB to QD Adapter	N	Y	786C8AA
Poly Voyager Office Base	N	Y	786C9AA
Poly Voyager Office Base Teams	N	Y	786D0AA
HyperX Cloud MIX Wireless GAM HEADSET	N	Y	4P5K9AA
HyperX Cloud Core Black Gaming Headset	N	Y	4P4F2AA
HyperX Cloud Flight - Wireless Gaming Headset (Black-Red) (HX-HSCF-BK/AM)	N	Y	4P5L4AA
HyperX Cloud Stinger Core GAM HEADSET PC	N	Y	4P4F4AA
HyperX Cloud II Core Wireless GAM HEADSET	N	Y	6Y2G8AA
HyperX SoloCast - USB Microphone (Black) (HMIS1X-XX-BK/G)	N	Y	4P5P8AA

Optical and Removable Storage	Factory Configured	Option Kit	Option Kit Part Number
HP CRU QX448 Removable with 200mm Cable (Qty.2) Frame/Carrier[1,2]	Y	N	-
HP CRU Secure High Performance Storage Module with 4TB M.2 SSD[4]	Y	N	-
HP CRU Secure High Performance Storage Module with 2TB M.2 SSD[3]	Y	Y	56Q87AA

Supported Components

HP CRU Secure High Performance Storage Module with 1TB M.2 SSD[3]	Y	Y	56Q88AA
HP CRU Secure High Performance Storage Module with 512GB M.2 SSD[3]	Y	Y	56Q89AA
HP 9.5mm Slim DVD-ROM Drive	Y	Y	K3R63AA
HP 9.5mm Slim Blu-Ray BDXL Writer Drive	Y	Y	K3R65AA
HP 9.5mm Slim DVD Writer	Y	Y	K3R64AA

Note: Duplication of copyrighted material is strictly prohibited. Actual speeds may vary. Double Layer media compatibility will widely vary with some home DVD players and DVD-ROM drives. No support for DVD RAM.

Note: With Blu-Ray, certain disc, digital connection, compatibility and/or performance issues may arise, and do not constitute defects in the product. Flawless playback on all systems is not guaranteed. In order for some Blu-ray titles to play, they may require a DVI or HDMI digital connection and your display may require HDCP support. HD-DVD movies cannot be played on this Desktop PC.

Note 1: Optional separate purchase of HP CRU Secure High Performance Storage (SHIPS) Module(s).
Note 2: Front QX448 carrier supports hot-swap capability with front removable drives
Note 3: HP CRU SHIPS Module Kit contains select M.2 SSD for install into a factory configured front removeable storage carrier (HP CRU QX448 Frame/Carrier).
Note 4: Some double-sided M.2 SSDs may throttle during heavy use, resulting in lower read and write speeds. This behavior is by design in order to protect the SSD from over-heating.

Networking and Communications	Factory Configured	Option Kit	Option Kit Part Number
NVIDIA Mellanox ConnectX-6 DX Dual Port 10/25GbE SFP28 NIC	Y	Y	436M8AA
HP 10GbE SFP+ SR/SW LC Fiber Optic Transceiver	Y	Y	860T8AA
HP 25GbE SFP28 LC Fiber Optic Transceiver	Y	Y	860T9AA
HP Dual Port 10GbE NIC G2 [1]	Y	Y	360K6AA
Intel® X550 Dual Port 10GbE NIC	Y	Y	1QL46AA
Allied Telesis AT-2911T/2-901 Dual Port 1GbE NIC	Y	Y	6E3Y9A
AT-2914SX/LC-901 Single Port 1GbE NIC	Y	Y	1C7Q2AA
Intel® I350-T4 4-Port 1GbE NIC	N	Y	W8X25AA
HP Flex 10GbE Single Port	Y	Y	56Q71AA
HP Flex 2.5GbE LAN Single Port	Y	Y	169K0AA/AT
Intel® I226-T1 Single Port 2.5GbE PCIe NIC	Y	Y	9P1U8AA
HP Flex 1GbE Fiber Single Port LC	Y	Y	20J15AA
HP Flex 1GbE Single Port NIC	Y	N	
HP Flex MediaTek RZ616 Wi-Fi 6 +Bluetooth® 5.3 WLAN wireless card with Internal Antenna	Y	N	
Intel® AX210 Wi-Fi 6E non-vPro + Bluetooth® 5.2 wireless card with External Antenna WLAN	Y	Y	340L7AA

Note1: installation of component does not require PCIe slot

HP Remote System Controller	Factory Configured	Option Kit	Option Kit Part Number

Supported Components

HP Remote System Controller	Y	Y	7K6D7AA
HP Remote System Controller Main Board Adapter	Y	Y	7K6D8AA
HP Integrated Remote System Controller	Y	Y	7K6D9AA
HP Remote System Controller for Universal KVM	N	Y	7K7N2AA

NOTE:
HP Remote System Controller is an IT Manager targeted manageability feature.
HP Remote access software is an End User centric and available as a separate AMO accessory.

Racking and Physical Security	**Factory Configured**	**Option Kit**	**Option Kit Part Number**
Z2 Mini/Z2 Tower/Z4/Z6 Depth Adjustable Fixed Rail Rack Kit	N	Y	2A8Y5AA
HP Keyed Cable Lock	N	Y	T1A62AA
HP Master Keyed Cable Lock 10mm	N	Y	T1A63AA

Input Devices	**Factory Configured**	**Option Kit**	**Option Kit Part Number**
Mouse and Keyboard Combo			
HP 655 Wireless Keyboard and Mouse Combo	N	Y	4R009AA/ET/UT/A6
HP Wired Desktop 320MK Mouse and Keyboard	N	Y	9SR36AA/ET/UT
Keyboard only			
HP 320K Wired Keyboard	Y	Y	9SR37AA/ET/UT
HP 125 Wired Keyboard	Y	Y	266C9AA/ET/UT
HP 975 USB+BT Dual-Mode Wireless Keyboard	N	Y	3Z726AA/UT
HP 455 Programmable Wireless Keyboard	N	Y	4R177AA/ET/UT/A6
HP Business Slim Smartcard Keyboard	Y	Y	Z9H48AA/AT
HyperX MKW100 Red Gaming Keyboard	N	Y	4P5E1AA
Mouse only			
HP Wired 320M Mouse	Y	Y	9VA80AA/ET/UT
HP Creator 935 Black Wireless Mouse	N	Y	1D0K8AA/UT
HP 128 LSR Wired Mouse	Y	Y	265D9AA/ET/UT
HP 125 Wired Mouse	N	Y	265A9AA/ET/UT
HyperX Pulsefire Core Black USB Gaming Mouse	N	Y	4P4F8AA
HyperX Pulsefire Haste White Wireless Gaming Mouse 2	N	Y	6N0A9AA
HyperX Pulsefire Haste Black Wireless Gaming Mouse 2	N	Y	6N0B0AA

Note: Keyboard and Mouse are optional or add on features.

Other Hardware	**Factory Configured**	**Option Kit**	**Option Kit Part Number**
HP Flex USB-C 3.2 Gen2	Y	Y	141K6AA/AT
HP Flex Dual USB-A 3.2 Gen1	Y	Y	141J8AA/AT
HP Flex Serial Port v3	Y	Y	5B895AA
HP Dual Thunderbolt4 PCIe x4 Low Profile Card	Y	Y	340L1AA

Supported Components

HP Type-C SuperSpeed USB 20Gbps Front v3 Premium Module	Y	Y	8R3X3AA
HP Internal Serial+PS/2 Port	Y	Y	56Q78AA
HP USB 2.0 Type-A Port Adapter Kit[1]	N	Y	79C24AA
HP SD Card Reader Zx G4	Y	Y	2VK54AA
HP Z6 G5 A Fan and Front Card Guide Kit[3]	Y	Y	760N5AA
HP Z6 G5 A Memory Cooling Solution[2]	Y	Y	760N6AA
HP Z6 G5 A PCIe Retainer with Fans[3]	Y		760N7AA
HP C13 1.83m Power Cord Kit (halogen-free)	Y	N	
HP C13 1.83m Power Cord Kit	Y	Y	6Z1T9AA
HP C13-C14 2.0m Power Cord Kit	Y	N	
C13-C14 2.0m 15A 100-127V Countries Straight Desktop Power Cord	Y	N	8R881AA
C13-C14 2.0m 10A 200-240V Countries Straight Desktop Power Cord	Y	N	8R882AA
HP Z4/Z6 A HDD Cable Kit	N	Y	74Y88AA

Note 1: USB 2.0 Type-A Port Adapter Kit has a single USB 2.0 type A connector.
Note 2: HP Z6 G5 A Memory Cooling Solution 760N6AA is required as a separate purchase for after-market memory configurations using 32GB Registered DIMMs or greater. If configured from the factory, configurations using 32GB Registered DIMMs or greater will include a memory cooling solution.
Note 3: HP Z6 G5 A Fan and Front Card Guide Kit 760N5AA and HP Z6 G5 A PCIe Retainer with Fans 760N7AA are required for specific graphics configurations (see Graphics section).

Software	**Factory Configured**	**Option Kit**	**Support Notes**
HP Performance Advisor	Y	N	1
HP PC Hardware Diagnostics UEFI	Y	N	2
HP PC Hardware Diagnostics Windows	Y	N	
HP Wolf Security	Y	N	4
HP Notifications	Y	N	
HP Desktop Support Utility	Y	N	
HP Documentation	Y	N	
myHP	Y	N	
Kingsoft WPS Office	Y	N	5
Z by HP Data Science Stack Manager	Y	N	3,6
WSL2/Ubuntu Data Science Stack	Y	N	3
HP Image Assistant	N	N	
HP Support Assistant	N	N	
Wolf Pro Security			7

Note 1: Also available as a free download from http://www.hp.com/go/performanceadvisor
Note 2: Windows OS only
Note 3: Only available with NVIDIA graphics
Note 4: HP Wolf Security for Business requires Windows 10 or 11 Pro higher, includes various HP security features and is available on HP Pro, Elite, RPOS and Workstation products. See product details for included security features.
Note 5: Not available in China

Supported Components

Note 6: Z by HP Data Science Stack Manager requires Windows 10 version 21H2 (Build 19044) and higher or 64-bit Ubuntu 20.04 and is available on select Z workstations.

Note 7: HP Wolf Pro Security Edition is available preloaded on select SKUs, and, depending on the HP product purchased, includes a license with a term length communicated to you at purchase and in your order confirmation email. The HP Wolf Pro Security Edition software is licensed under the license terms of the HP Wolf Security Software - End-User license Agreement (EULA) that can be found at: https://support.hp.com/us-en/document/ish_3875769-3873014-16 as that EULA is modified by the following: 7. Term. Unless otherwise terminated earlier pursuant to the terms contained in this EULA, the license for the HP Wolf Pro Security Edition is effective upon 4 months after the date the HP Product was shipped by HP and will continue for the term communicated to you at purchase and in your order confirmation email (“Initial Term”). At the end of the Initial Term you may either (a) purchase a renewal license for the HP Wolf Pro Security Edition from HP.com, HP Sales or an HP Channel Partner, or (b) continue using the standard versions of HP Sure Click and HP Sure Sense at no additional cost with no future software updates or HP Support. Notwithstanding the foregoing, the license shall expire no later than one year after the fixed term of the subject license ends.

Supported Components

Operating Systems Windows 11 Pro High End[2]
Windows 10 Pro for Worskations[2,5]
Ubuntu 22.04 LTS[4]
HP Linux®-ready
Red Hat® Enterprise Linux® (RHEL) Workstation - paper

[2] Not all features are available in all editions or versions of Windows. Systems may require upgraded and/or separately purchased hardware, drivers, software or BIOS update to take full advantage of Windows functionality. Windows is automatically updated and enabled. High speed internet and Microsoft account required. ISP fees may apply and additional requirements may apply over time for updates. See http://www.windows.com.
[3]This system is preinstalled with Windows 10 Pro software and also comes with a license for Windows 11 Pro software and provision for recovery software. You may only use one version of the Windows software at a time. Switching between versions will require you to uninstall one version and install the other version. You must back up all data (files, photos, etc.) before uninstalling and installing operating systems to avoid loss of your data.
[4] Not all features are available in all editions or versions of Ubuntu. Systems may require upgraded and/or separately purchased hardware, drivers, software or BIOS to take full advantage of Ubuntu functionality. Ubuntu may be automatically updated. ISP fees may apply and additional requirements may apply over time for updates.
[5] Not available as factory image, support only.

NOTE: Your product does not support Windows 8 or Windows 7. In accordance with Microsoft's support policy, HP does not support the Windows® 8 or Windows 7 operating system on products configured with Intel® and AMD® 7th generation and forward processors or provide any Windows® 8 or Windows 7 drivers on http://www.support.hp.com. A full list of HP products and the Windows 10 versions tested is available on the HP support website. https://support.hp.com/us-en/document/c05195282

SOFTWARE COMPONENTS AND APPLICATIONS WITH WINDOWS

Software
HP Anyware
HP Performance Advisor[1]
HP PC Hardware Diagnostics UEFI
HP PC Hardware Diagnostics Windows
HP Wolf Security[22]
HP Notifications
HP Desktop Support Utility
HP Documentation
myHP
HP Privacy Settings
HP Easy Clean
Kingsoft WPS Office (China only)
WSL2/Ubuntu Data Science Stack
HP Image Assistant (Supported)
HP Support Assistant (Supported)
HP Services Scan[25]

Security Management
HP Secure Erase[16]
HP Wolf Pro Security Edition (paid option)[18]
HP Wolf Security for Business[22]
HP Sure Click[5]
HP Sure Sense[6]
HP Sure Run GenX[9]
HP Sure Recover GenX[10]
HP Sure Start GenX[8]
HP Tamper Lock[12]
HP Sure Admin[11]
HP Client Security Manager GenX[4]

[1] HP Performance Advisor Software - HP Performance Advisor is ready to help you get the most out of your HP Workstation from day one—and every day after. Learn more or download at: http://hp.com/PerformanceAdvisor

[2] HP Driver Packs not preinstalled, however available for download at http://www.hp.com/go/clientmanagement.

[3] HP Manageability Integration Kit can be downloaded from https://ftp.ext.hp.com/pub/caps-softpaq/cmit/HPMIK.html

[4] HP Client Security Manager Gen7 requires Windows and is available on the select HP PCs.

[5] HP Sure Click requires Windows 11 Pro or Enterprise. See https://bit.ly/2PrLT6A_SureClick for complete details.

[6] HP Sure Sense requires Windows 11 Pro or Enterprise and supports Microsoft Internet Explorer, Google Chrome™, and Chromium™. Supported attachments include Microsoft Office (Word, Excel, PowerPoint) and PDF files in read only mode, when Microsoft Office or Adobe Acrobat are installed.

[7] Microsoft Defender Opt in and internet connection required for updates.

[8] HP Sure Start Gen 7 is available on select HP PCs and workstations. See product specifications for availability.

[9] HP Sure Run Gen5 is available on select Windows 11 based HP Pro, Elite and Workstation PCs with select Intel® or AMD processors

[10] HP Sure Recover Gen4 is available on select HP PCs and requires Windows 10 and an open network connection. You must back up important files, data, photos, videos, etc. before using HP Sure Recover to avoid loss of data. Network based recovery using Wi-Fi is only available on PCs with Intel Wi-Fi Module

Supported Components

[11] HP Sure Admin requires Windows 10 or higher, HP BIOS, HP Manageability Integration Kit from http://www.hp.com/go/clientmanagement and HP Sure Admin Local Access Authenticator smartphone app from the Android or Apple store.
[12] Enable/disable by customers or IT administrator with administrator authority.
[13] HP BIOSphere Gen6 features may vary depending on the platform and configurations.
[16] Secure Erase - For the methods outlined in the National Institute of Standards and Technology Special Publication 800-88 "Clear" sanitation method. HP Secure Erase does not support platforms with Intel® Optane.
[18] HP Wolf Pro Security Edition is available preloaded on select SKUs, and, depending on the HP product purchased, includes a license with a term length communicated to you at purchase and in your order confirmation email. The HP Wolf Pro Security Edition software is licensed under the license terms of the HP Wolf Security Software - End-User license Agreement (EULA) that can be found at: https://support.hp.com/us-en/document/ish_3875769-3873014-16 as that EULA is modified by the following: 7. Term. Unless otherwise terminated earlier pursuant to the terms contained in this EULA, the license for the HP Wolf Pro Security Edition is effective upon 4 months after the date the HP Product was shipped by HP and will continue for the term communicated to you at purchase and in your order confirmation email ("Initial Term"). At the end of the Initial Term you may either (a) purchase a renewal license for the HP Wolf Pro Security Edition from HP.com, HP Sales or an HP Channel Partner, or (b) continue using the standard versions of HP Sure Click and HP Sure Sense at no additional cost with no future software updates or HP Support. Notwithstanding the foregoing, the license shall expire no later than one year after the fixed term of the subject license ends.
[22] HP Wolf Security for Business requires Windows 10 or 11 Pro higher, includes various HP security features and is available on HP Pro, Elite, RPOS and Workstation products. See product details for included security features.
[23] Absolute agent is shipped turned off, and will be activated when customers activate a purchased subscription. Subscriptions can be purchased for terms ranging multiple years. Service is limited, check with Absolute for availability outside the U.S. The Absolute Recovery Guarantee is a limited warranty. Certain conditions apply. For full details visit: http://www.absolute.com/company/legal/agreements/computrace-agreement. Data Delete is an optional service provided by Absolute Software. If utilized, the Recovery Guarantee is null and void. In order to use the Data Delete service, customers must first sign a Pre-Authorization Agreement and either obtain a PIN or purchase one or more RSA SecurID tokens from Absolute Software.
[24]Firmware TPM is version 15.23 and version 7.2.3.1 for Infineon and Nuvoton chips, respectively. Hardware TPM is v2.0.
[25] HP Services Scan is provided with Windows Update on select products and will check entitlement on each hardware device to determine if an HP TechPulse-enabled service has been purchased, and will download applicable software automatically. HP TechPulse is a telemetry and analytics platform that provides critical data around devices and applications. For full system requirements or to disable this feature, please visit http://www.hpdaas.com/requirements . Not applicable in China.

System Board

System Board Form Factor	Tower
Processor Socket	AMD Socket SP6
Chipset	AMD PRO 695 Chipset
Super I/O Controller	Nuvoton SIO21
Memory Expansion Slots	8 DDR5 memory slots
Memory Type Supported	DDR5 RDIMM (Registered), RDIMMs and 3DS RDIMMs
Memory Modes	Non-Interleaving for single channel, Interleaving when multiple channels are populated
Memory Speed Supported	5200MT/s DDR5. The memory will run at the slowest supported speed that either the CPU or the memory modules support. For example, if the CPU only supports 5200MHz speed, 5600MHz will only run at 5200MHz'
Memory Protection	ECC on data
Maximum Memory	1TB when 128GB are available
Memory Configuration (Supported)	16GB, 32GB, 64GB RDIMMs, 128GB 3DS RDIMMs when available. RDIMMs and 3DS RDIMMs cannot be mixed in the same system.
NVDIMM Memory	N/A
PCI Express Connectors	Standard PCIe Slots: •4 PCI Express Gen5 slot x16 mechanical/ x16 electrical (full height, full length) • 1 PCI Express Gen4 slot x16 mechanical/ x16 electrical (full height, full length) • 1 PCI Express Gen4 slot x4 mechanical/ x4 electrical (full height, half length) M.2 Slots: • 2 PCI Express Gen5 slot x4. • 2 PCI Express Gen4 slot x4. Other PCIe Connections: • 2 Front NVMe Storage (SlimSAS PCIe Gen4 x8) (each PCIe connection supports two x4 M.2 devices for a total system support of four x4 M.2 devices via QX448) • 1 Connector for HP Dual Port 10GbE NIC G2 (PCIe Gen4 x4)
Supported Drive Interfaces	**Integrated RAID**

		RAID 0	RAID 1	RAID 5	RAID 10
Standard Factory Configuration	NVMe	On-Board Boot (Max 2)	On-Board Boot	-	-
	SATA	-	-	-	-
	Supported Operating Systems: Windows 11				
Factory Services	NVME	Boot & Data All Supported Locations	Boot & Data All Supported Locations	Boot & Data All Supported Locations	Boot & Data All Supported Locations
	SATA	Boot & Data All Supported Locations	Boot & Data All Supported Locations	Boot & Data All Supported Locations	Boot & Data All Supported Locations
	Supported Operating Systems: Windows 11, RHEL 8.6 and later, SLE 15 SP4 and later, and Ubuntu 20.04 or later				

System Technical Specifications

	Note: HP only supports VROC (Intel) and AMD-RAIDXpert2 (AMD) RAID configurations **Note:** Customers may use the built-in Linux software RAID. See details at: www.hp.com/support/Linux_hardware_matrix	
	SATA	Integrated (2) Serial ATA interfaces (6Gb/s SATA).
	Integrated Graphics	None
	Network Controller	Integrated Realtek RTL8111EPP Interface: 1GbE RJ-45 Port (10/100/1000Mbps) Management Capabilities: WOL, PXE, DASH Manageability
	External SATA (eSATA)	None
	Serial	1 internal header (requires optional Serial Port Adapter Kit)
	2nd Serial	Flex IO Module
	HD Integrated Audio	Yes
USB Connector(s)	**Front**	Front I/O Entry: 4 USB 3.1 Gen1 Type-A (left-most port supports Battery Charging 1.2) Front I/O Premium: 1x USB 3.2 Gen2x2 Type-C® (Power Delivery 3.0) 2x USB 3.1 Gen1 Type-A (left-most port supports Battery Charging 1.2) • USB Type-C® Ports provide 3 Amps @ 5 Volts • Charging USB Type-A port provides 1.5 Amps @ 5 Volts • Standard USB Type-A Ports provide 900mA @ 5 Volts
	Rear	4x USB 3.1 Gen1 Type-A with USB hub and 2x USB 3.2 Gen 1 Type-A without hub. (Optional: 2x USB 3.0 Type-A (optional via Flex module) or 1x USB 3.1 Gen2 Type-C® charging port (optional via Flex module).
	Internal	1 USB 3.2 Gen1 header, with a single 12-pin shrouded connector. This header supports a USB Media Card reader. 1 USB 2.0 single port header
HD Integrated Audio	Yes	
Flash ROM	Yes	
CPU Fan Header	Yes	
Memory Fan Header	Yes	
Chassis Fan Header	Yes (Rear, Front Upper, Front Lower)	
Front PCI Fan Header	Yes (Lower and Upper)	
Front Control Panel/Speaker Header	Yes	
CMOS Battery Holder - Lithium	Yes	
Integrated Trusted Platform Module	Integrated TPM 2.0 The TPM module disabled where restricted by law, i.e. Russia.	
Power Supply Headers	Yes	
Power Switch, Power LED & Hard Drive LED Header	Yes	
Clear Password Jumper	Yes	
Keyboard/Mouse	USB or PS/2 (option)	
Power Supply	1450W, 1125W/1275W and 775W	

System Technical Specifications

System Configurations								
Example Configuration #1	**Processor Info**	AMD Ryzen™ Threadripper™ PRO 7945WX						
	Memory Info	32GB DDR5 (2x16GB) RegRAM						
	Graphics Info	1x NVIDIA® A2000						
	Disks/Optical/Floppy	1x 4TB Internal M.2 SSD + 1x DVDRW SATA						
	PSU	775W						
	Other	N/A						
Energy Consumption (Watts)		115 VAC		230 VAC		100 VAC		
		LAN Enabled	LAN Disabled	LAN Enabled	LAN Disabled	LAN Enabled	LAN Disabled	
	Windows Idle (S0)	57.382	56.779	57.761	56.668	TBD	TBD	
	Windows Busy Typ (S0)	367.6		361.6		364.79		
	Windows Busy Max (S0)	385.28		380.22		382.32		
	Sleep (S3)	6.557	6.483	6.976	6.543	6.574	6.492	
	Off (S5)	1.969	1.949	2.448	2.059	2.032	1.957	
	Zero Power Mode (EuP)	0.247		0.286		0.248		

Heat Dissipation (Btu/hr)		115 VAC		230 VAC		100 VAC	
		LAN Enabled	LAN Disabled	LAN Enabled	LAN Disabled	LAN Enabled	LAN Disabled
	Windows Idle (S0)	195.787	193.729	197.081	193.351	198.506	193.703
	Windows Busy Typ (S0)	1254.251		1233.779		1244.263	
	Windows Busy Max (S0)	1314.576		1297.311		1304.476	
	Sleep (S3)	22.372	22.120	23.802	22.324	22.430	22.151
	Off (S5)	6.718	6.650	8.352	7.025	6.933	6.677
	Zero Power Mode (EuP)	0.843		0.976		0.846	

Example Configuration #2	**Processor Info**	AMD Ryzen™ Threadripper™ PRO 7955WX					
	Memory Info	64GB DDR5 (4x16GB) RegRAM					
	Graphics Info	1x NVIDIA® A4000					
	Disks/Optical/Floppy	1x 4TB Internal SATA HDD + 2x 4TB Internal M.2 SSD					
	PSU	1125W					
	Other	N/A					
Energy Consumption (Watts)		115 VAC		230 VAC		100 VAC	
		LAN Enabled	LAN Disabled	LAN Enabled	LAN Disabled	LAN Enabled	LAN Disabled
	Windows Idle (S0)	75.011	72.431	75.639	73.246	74.745	72.687
	Windows Busy Typ (S0)	533.61		526.80		535.71	
	Windows Busy Max (S0)	605.35		588.25		606.37	
	Sleep (S3)	6.708	6.657	6.825	6.627	6.712	6.664
	Off (S5)	2.475	2.401	2.512	2.436	2.481	2.406
	Zero Power Mode (EuP)	0.257		0.296		0.255	

Heat Dissipation (Btu/hr)		115 VAC		230 VAC		100 VAC	
		LAN	LAN	LAN	LAN	LAN	LAN

System Technical Specifications

		Enabled	Disabled	Enabled	Disabled	Enabled	Disabled
	Windows Idle (S0)	255.938	247.134	258.080	249.915	255.030	248.008
	Windows Busy Typ (S0)	1820.677		1797.442		1827.843	
	Windows Busy Max (S0)	2065.454		2007.109		2068.934	
	Sleep (S3)	22.888	22.714	23.287	22.611	22.901	22.738
	Off (S5)	8.445	8.192	8.571	8.312	8.465	8.209
	Zero Power Mode (EuP)	0.877		1.010		0.871	

Example Configuration #3	**Processor Info**	AMD Ryzen™ Threadripper™ PRO 7975WX
	Memory Info	128GB DDR5 (8x16GB) RegRAM
	Graphics Info	2x NVIDIA® A4000
	Disks/Optical/Floppy	2x 1TB Internal SATA HDD + 2x 4TB Internal M.2 SSD + 1x DVDRW SATA
	PSU	1125W
	Other	N/A

Energy Consumption (Watts)		115 VAC		230 VAC		100 VAC	
		LAN Enabled	LAN Disabled	LAN Enabled	LAN Disabled	LAN Enabled	LAN Disabled
	Windows Idle (S0)	108.546	105.36	109.341	105.884	108.451	104.874
	Windows Busy Typ (S0)	716.74		700.56		718.32	
	Windows Busy Max (S0)	780.421		759.67		776.841	
	Sleep (S3)	8.295	8.034	8.455	8.237	8.311	8.287
	Off (S5)	2.289	2.271	2.297	2.281	2.288	2.274
	Zero Power Mode (EuP)	0.231		0.293		0.233	

Heat Dissipation (Btu/hr)		115 VAC		230 VAC		100 VAC	
		LAN Enabled	LAN Disabled	LAN Enabled	LAN Disabled	LAN Enabled	LAN Disabled
	Windows Idle (S0)	370.359	359.489	373.071	361.276	370.035	357.831
	Windows Busy Typ (S0)	2445.516		2390.311		2450.908	
	Windows Busy Max (S0)	2662.796		2591.994		2650.581	
	Sleep (S3)	28.302	27.412	28.848	28.105	28.357	28.275
	Off (S5)	7.811	7.748	7.837	7.783	7.806	7.759
	Zero Power Mode (EuP)	0.788		0.999		0.794	

Example Configuration #4	**Processor Info**	AMD Ryzen™ Threadripper™ PRO 7995WX
	Memory Info	256GB DDR5 (8x32GB) RegRAM
	Graphics Info	2x NVIDIA® A6000
	Disks/Optical/Floppy	2x 4TB Internal SATA HDD + 2x 4TB Internal M.2 SSD
	PSU	1450W/200V
	Other	N/A

Energy Consumption (Watts)		115 VAC		230 VAC		100 VAC	
		LAN Enabled	LAN Disabled	LAN Enabled	LAN Disabled	LAN Enabled	LAN Disabled
	Windows Idle (S0)	N/A		179.521	157.249	N/A	
	Windows Busy Typ (S0)	N/A		925.96		N/A	

System Technical Specifications

	Windows Busy Max (S0)	N/A		1003.71		N/A	
	Sleep (S3)	N/A	N/A	10.674	10.514	N/A	N/A
	Off (S5)	N/A	N/A	2.886	2.871	N/A	N/A
	Zero Power Mode (EuP)	TBD		0.312		N/A	

Heat Dissipation (Btu/hr)		115 VAC		230 VAC		100 VAC	
		LAN Enabled	LAN Disabled	LAN Enabled	LAN Disabled	LAN Enabled	LAN Disabled
	Windows Idle (S0)	N/A		612.526	536.533	N/A	
	Windows Busy Typ (S0)	N/A		3159.376		N/A	
	Windows Busy Max (S0)	N/A		3424.658		N/A	
	Sleep (S3)	N/A	N/A	36.419	35.873	N/A	N/A
	Off (S5)	N/A	N/A	9.847	9.795	N/A	N/A
	Zero Power Mode (EuP)	N/A		1.0645		N/A	

System Technical Specifications

Operating Voltage Range	90-269 VAC
Rated Voltage Range	100-240 VAC
Rated Line Frequency	50-60 Hz
Operating Line Frequency Range	47-66 Hz
ENERGY STAR® certified (Config Dependent)	Yes
CECP Compliant @ 220V	Yes
FEMP Standby Power Compliant	Yes, with Wake-on-LAN disabled: <1W in S5-Power Off
Built-in Self Test (BIST) **LED**	Yes
Surge Tolerant Full Ranging Power Supply (withstands power surges up to 2000V)	Yes
Hood Lock Header	Yes
ErP Lot 6- Tier 1 Compliance @ 230V (<1W in S5 - Power Off)	Yes
ErP Lot 6- Tier 2 Compliance @ 230V (<0.5W in S5 - Power Off)	Yes

Declared Noise Emissions (Entry-level, Mid-level, and High-end configurations; tested on floor)			
System Configuration (Entry level)	**Processor Info**	AMD Ryzen™ Threadripper™ PRO 7945WX	
	Memory Info	32GB DDR5 (2x16GB) RegRAM	
	Graphics Info	1x NVIDIA Quadro A2000	
	Disks/Optical	1x 4TB M.2 + 1x DVDRW SATA	
	Power Supply	775W	
Declared Noise Emissions		**Sound Power** (LWAd, bels)	**Deskside Sound Pressure** (LpAm, decibels)
	Idle	3.33	15.9
	Hard drive Operating (Drive Random Seek)	4.10	23.9
	Active mode	3.94	21.8
System Configuration (Mid-level)	**Processor Info**	AMD Ryzen™ Threadripper™ PRO 7955WX	
	Memory Info	64GB DDR5 (4x16GB) RegRAM	
	Graphics Info	1x NVIDIA Quadro A4000	
	Disks/Optical	2x 512GB M.2 SSD + 1x 4TB SATA HDD	
	Power Supply	1125W	
Declared Noise Emissions		**Sound Power** (LWAd, bels)	**Deskside Sound Pressure** (LpAm, decibels)
	Idle	3.51	18.6
	Hard drive Operating (Drive Random Seek)	4.08	24

System Technical Specifications

	Active mode	4.55	27.4
System Configuration (High-end)	**Processor Info**	AMD Ryzen™ Threadripper™ PRO 7995WX	
	Memory Info	512GB DDR5 (8x64GB) RegRAM	
	Graphics Info	2x NVIDIA Quadro A6000	
	Disks/Optical	1x 4TB SATA HDD + 4x 4TB M.2 + 1x DVDRW	
	Power Supply	1125W	
Declared Noise Emissions		**Sound Power** (LWAd, bels)	**Deskside Sound Pressure** (LpAm, decibels)
	Idle	3.19	19.1
	Hard drive Operating (Drive Random Seek)	3.71	22.8
	Active mode	3.22	19.1

Environmental Requirements	**Temperature**	Operating: 5° to 40°C (40° to 104°F)[1] Non-operating: -40° to 60°C (-40° to 140°F) Above 1524 m (5,000 feet) altitude, the maximum operating temperature is reduced by 1° C (1.8° F) for every 305 m (1,000 feet) increase in elevation Maximum rate of change: 10 °C/hr No direct sustained sunlight [1]40°C has been validated for configs up to a 350W CPU, 2x NVIDIA® RTX A4000 graphics cards, 8x64GB RAM, 4x 4TB M.2 storage, 1x 2TB HDD storage, and 1125W PSU
	Humidity	Operating: Operating: 8% to 85% RH, non-condensing, 35° C maximum wet bulb Non-operating: 8% to 90% relative humidity, non-condensing, 35° C maximum wet bulb
	Maximum Altitude (non-pressurized)[6]	Operating (with Rotational Hard Drives): 3,048 m (10,000 feet) Operating (with only Solid-State Drives): 5,000 m (16,404 feet) Non-operating: 12,192 m (40,000 ft) Note: Above 1524 m (5,000 feet) altitude, maximum operating temperature is reduced by 1° C (1.8° F) per 305 m (1,000 feet) increase in elevation.
	Dynamic	Shock Operating: ½-sine: 40g, 2-3ms (~62 cm/sec) Non-operating: ½-sine: 160 cm/s, 2-3ms (~105g) square: 422 cm/s, 20g NOTE: Values represent individual shock events and do not indicate repetitive shock events Vibration Operating random: 0.5g (rms), 5-300 Hz, up to 0.0025g²/Hz Non-operating random: 2.0g (rms), 5-500 Hz, up to 0.0150 g²/Hz NOTE: Values do not indicate continuous vibration.
	Cooling	Above 1524 m (5,000 feet) altitude, the maximum operating temperature is reduced by 1° C (1.8° F) for every 305 m (1,000 feet) increase in elevation, up to 3048 m (10,000 feet)

System Technical Specifications

Physical Security and Serviceability

Access Panel	Tool-less Includes system board and memory information
Optical Drive	Tool-less, Optical Drive requires a 5.25" bay carrier
Hard Drives	Tool-less
Expansion Cards	Tool-less
Processor Socket	Screw-in Retention for Processor and Cooler
Blue User Touch Points	Yes, on tool-less internal chassis mechanisms
Color-coordinated Cables and Connectors	Yes
Memory	Tool-less
System Board	Screw-in
Power and HD LED on Front of Computer	Yes
Over-Temp Warning on Screen	Yes
Dual Function Front Power Switch	Yes, causes a fail-safe power off when held for 4 seconds
Padlock Support	Yes (optional): Locks side cover and secures chassis from theft 7.0 mm (0.2756 in) diameter padlock loop at rear of system
Cable Lock Support	Yes, Kensington Cable Lock (optional): Locks side cover and secures chassis from theft 3 mm x 7 mm slot at rear of system
Universal Chassis Clamp Lock Support	Yes (optional): Locks side cover and locks cables to chassis. Secures chassis from theft and allows multiple units to be chained together when used with optional cable with threaded feature at rear of system
Solenoid Lock and Hood Sensor	Yes (optional) The Solenoid Hood Lock eliminates the need for a physical key by making the chassis lockable through software and a password. You can also lock and unlock the chassis remotely over the network. The Sensor Kit detects when the access panel has been removed
Rear Port Control Cover	No
Serial, USB, Audio, Network, Enable/Disable Port Control	Yes
Removable Media Write/Boot Control	Yes
Power-On Password	Yes
Setup Password	Yes, prevents an unauthorized person from changing the workstation configuration.
3.3V Aux Power LED on System PCA	No
NIC LEDs (integrated) (Green & Amber)	Yes
CPUs and Heatsinks	A T-20 Torx screwdriver is needed to remove the cooler and CPU.
Power Supply Diagnostic LED	Yes
Front Power Button	Yes
Front Power LED	Yes, white (normal), red (fault)
Front Hard Drive Activity LED	Yes, white
Front ODD Activity LED	Yes

System Technical Specifications

Internal Speaker	Yes
System/Emergency ROM Flash Recovery	Yes
Cooling Solutions	Air cooled forced convection
Power Supply Fans	80 mm x 80 mm x 25 mm (non-serviceable)
CPU Heatsink Fan	108 mm x 108 mm x 25 mm
Chassis Fan	Rear: 120 mm x 120 mm x 38mm 4-wire PWM Front Upper: 80 mm x 80 mm x 25 mm 4-wire PWM (Option based on System Config) Front Lower: 120 mm x 120 mm x 25 mm 4-wire PWM (Option based on System Config) Side Panel Upper: Dual 70 mm x 20 mm (Option based on System Config) Side Panel Lower: Dual 80 mm x 80 mm x 20 mm (Option based on System config)
Memory Heatsink Fan	Dual 60 mm x 60 mm x 25 mm Blindmate (optional based on configuration)
HP PC Hardware Diagnostics UEFI	Yes
Access Panel Key Lock	Yes, side panel barrel keylock (optional from the factory only)
ACPI-Ready Hardware	Advanced Configuration and Power Management Interface (ACPI). • Allows the system to wake from a low power mode. • Controls system power consumption, making it possible to place individual cards and peripherals in a low-power or powered-off state without affecting other elements of the system.
Integrated Chassis Handles	Yes, Front handle and dedicated rear recess
Power Supply	Requires T15 Torx or flat blade screwdriver
PCI Card Retention	Yes, rear (all), middle (all), front (full-length cards with extender, using Fan and Front Card Guide Kit)
Flash ROM	Yes
Diagnostic Power Switch LED on board	Yes
Clear Password Jumper	Yes
Clear CMOS Button	Yes
CMOS Battery Holder	Yes
DIMM Connectors	Yes

Service, Support, and Warranty

On-site Warranty and Service[1]: Three-years, limited warranty and service offering delivers on-site, next business-day[2] service for parts and labor. 24/7 operation will not void the HP warranty. Storage devices are not covered under warranty for 24/7 operation except for Enterprise class HDDs.

NOTE 1: Terms and conditions may vary by country. Certain restrictions and exclusions apply.
NOTE 2: On-site service may be provided pursuant to a service contract between HP and an authorized HP third-party provider, and is not available in certain countries. Global service response times are based on commercially reasonable best effort and may vary by country.

HP Care Pack Services extend service contracts beyond the standard warranties. Service starts from date of hardware purchase. To choose the right level of service for your HP product, use the HP Care Pack Services Lookup Tool at: http://www.hp.com/go/lookuptool. Service levels and response times for HP Care Packs may vary depending on your geographic location.

Certification and Compliance

System Technical Specifications

- USGv6 compliant for Windows OS (USGv6 Compliance Report)
- Completed ISO/IEC 17025 accredited testing designed specifically for the USGv6 Test Program. USGv6 is a test program designated by NIST that provides a proof of compliance to IPv6 (Internet Protocol version 6) specifications outlined in current industry standards for common network products. It is meant as a strategic planning guide for USG (United States Government) IT acquisitions to help ensure the completeness, correctness, interoperability and security of early IPv6 product offerings so as to protect early USG investments in the technology. (source: UNH)

Environmental Sustainability questions concerning:

- Ecolabels (EPEAT, TCO, etc.)
- ENERGY STAR, California Energy Commission (CEC)
- Compliance with Environmental legislation (EU ErP, China CECP, EU RoHS and other countries)
- Supply Chain Social Environmental Responsibility (SER) (conflict minerals; human rights, etc.)
- Product specific environmental features (material content, packaging content, recycled content, etc.)
- China Energy Label (CEL)

Please contact sustainability@hp.com

For country specific Regulatory Compliance approval documents or Regulatory and Safety questions concerning:

- Declarations of Conformity (for self-service, go to https://www.hp.com/uk-en/certifications/technical/regulations-certificates.html?jumpid=ex_r135_uk/en/any/corp/hpuk-mu_chev/certificates)
- GS Certificates
- Product Safety Certificates (UL, CB, BIS, etc.)
- EMC Certificates, Declarations of Conformity, or Certificates of Conformity (CE, FCC, ICES, etc.)
- CCC Certificates
- Ergonomics
-

Please contact techregshelp@hp.com

BIOS

PCIe 5.0 Support	Full BIOS support for PCI Express through industry standard interfaces. Supported speeds and slot information vary.
ATA/ATAPI	AT Attachment 6 with Packet Interface (ATA/ATAPI-6), Revision 3b
WMI Support	WMI is Microsoft's implementation of Web-Based Enterprise Management (WBEM) for Windows. WMI is fully compliant with the Distributed Management Task Force (DMTF) Common Information Model (CIM) and WBEM specifications.
BIOS Power On	Users can define a specific date and time for the system to power on.
ROM Based Computer Setup Utility (F10)	Review and customize system configuration settings controlled by the BIOS.
System/Emergency ROM Flash Recovery with Video	Recovers system BIOS in corrupted Flash ROM.
AMD ROM Armor v3	AMD Platform Secure Processor enforced BIOS ROM access.
AMD Transparent Secure Memory Encryption (TSME)	Physical encryption of all system memory decoupled from the Operating System. Provides encryption without requiring software modification.
Replicated Setup	Saves BIOS settings to USB flash device in human readable file (HpSetup.txt). BiosConfigurationUtility.exe utility can then replicate these settings on machines being deployed without entering Computer Configuration Utility (F10 Setup).
SMBIOS	System Management BIOS Reference Specification, Version 3.5
Boot Control	Disables the ability to boot from removable media on supported devices.
Memory Change Alert	Alerts management console if memory is removed or changed.
Thermal Alert	Monitors the temperature state within the chassis. Three modes:

System Technical Specifications

	• NORMAL - normal temperature ranges. • ALERTED - excessive temperatures are detected. Raises a flag so action can be taken to avoid shutdown or provide for a smoother system shutdown. • SHUTDOWN - excessive temperatures are encountered. Automatically shuts down the computer without warning before hardware component damage occurs.
Remote ROM Flash	Provides secure, fail-safe ROM image management from a central network console.
ACPI (Advanced Configuration and Power Management Interface)	Allows the system to enter and resume from low power modes (sleep states). Enables an operating system to control system power consumption based on the dynamic workload. Makes it possible to place individual cards and peripherals in a low-power or powered-off state without affecting other elements of the system. Supports ACPI 6.0 for full compatibility with 64-bit operating systems.
Ownership Tag	A user-defined string stored in non-volatile memory that is displayed in the BIOS splash screen.
Remote Wakeup/Remote Shutdown	System administrators can power on, restart, and power off a client computer from a remote location.
Instantly Available PC (Suspend to RAM - ACPI sleep state S3)	Allows for very low power consumption with quick resume time.
Remote System Installation via F12 (PXE 2.1) (Remote Boot from Server)	Allows a new or existing system to boot over the network and download software, including the operating system.
ROM revision levels	Reports the system BIOS revision level in Computer Configuration Utility (F10 Setup). Version is available through an industry standard interface (SMBIOS and WMI) so that management SW applications can use and report this information.
System board revision level	Allows management SW to read revision level of the system board. Revision level is digitally encoded into the HW and cannot be modified.
Start-up Diagnostics (Power-on Self-Test)	Assesses system health at boot time with selectable levels of testing.
Auto Setup when new hardware installed	System automatically detects addition of new hardware.
Keyboard-less Operation	The system can be booted without a keyboard.
Localized ROM Setup	Common BIOS image supports System Configuration Utility (F10 Setup) menus in 15 languages with local keyboard mappings.
Asset Tag	The user or MIS to set a unique tag string in non-volatile memory.
Per-slot Control	Allows I/O slot parameters (option ROM enable/disable, bifurcation, speed) to be configured individually.
Adaptive Cooling	Control parameters are set according to detected hardware configuration for optimal acoustics.
Pre-boot Diagnostics	(Pre-video) critical errors are reported via beeps and blinks on the power LED.
UEFI Specification Revision	2.7
ACPI	Advanced Configuration and Power Management Interface, Version 6.0
CD Boot	"El Torito" Bootable CD-ROM Format Specification Version 1.0
EHCI	Enhanced Host Controller Interface for Universal Serial Bus, Revision 1.0
PCI Express	PCI Express Base Specification, Revision 2.0 PCI Express Base Specification, Revision 3.0 PCI Express Base Specification, Revision 4.0 PCI Express Base Specification, Revision 5.0
SATA	Serial ATA Specification, Revision 1.0a Serial ATA 3 Gb/s: Serial ATA Specification, Revision 2.5 Serial ATA 6 Gb/s: Serial ATA Specification, Revision 3.0
SPD	JEDEC JESD300-5
TPM	Trusted Computing Group TPM Specification Version 2.0 (Infineon SLB 9672). Common Criteria EAL4+ certified.

System Technical Specifications

	FIPS 140-2 Certification TCG TPM Certified products list: http://www.trustedcomputinggroup.org/certification/tpm-certified-products/
UHCI	Universal Host Controller Interface Design Guide, Revision 1.1
USB	Universal Serial Bus Revision 1.1 Specification Universal Serial Bus Revision 2.0 Specification Universal Serial Bus Revision 3.1 Specification Universal Serial Bus Revision 3.2 Specification USB Battery Charging specification, Revision 1.2 USB Power Delivery specification Revision 3.0

Social and Environmental Responsibility

Eco-Label Certifications & Declarations

This product is low halogen except for configurations that include the Broadcom 5720-2P NIC card.

This product has received or is in the process of being certified to the following approvals and may be labeled with one or more of these marks:

- IT ECO declaration
- US ENERGY STAR®
- US Federal Energy Management Program (FEMP)
- EPEAT® Gold with Climate+ registered. See http://www.epeat.net for registration status and tier levels by country
- TCO or TCO Certified Edge: certified in all markets except North America
- China Energy Conservation Program (CECP)
- China State Environmental Protection Administration (SEPA)
- Taiwan Green Mark
- Korea Eco-label
- Japan PC Green label*

Sustainable Impact Specifications

- Product Carbon Footprint
- Ocean-bound plastic in system fan, CPU fan[1]
- 35% post-consumer recycled plastic[2]
- 10% recycled metal[7]
- Low halogen[3]
- Outside Box and corrugated cushions are 100% sustainably sourced and recyclable[4]
- Recycled Plastic cushions[5,6].

System Configuration

The configuration used for the Energy Consumption and Declared Noise Emissions data for the Notebook model is based on a “Typically Configured Notebook”.

Energy Consumption (in accordance with US ENERGY STAR® test method)	**115VAC, 60Hz**	**230VAC, 50Hz**	**100VAC, 50Hz**
Normal Operation (Sort idle)	71.717 W	70.346 W	70.622 W
Normal Operation (Long idle)	69.41 W	68.18 W	68.87 W
Sleep	6.91 W	6.86 W	6.92 W
Off	2.35 W	2.19 W	2.25 W

Note:
Energy efficiency data listed is for an ENERGY STAR® compliant product if offered within the model family . HP computers marked with the ENERGY STAR® Logo are compliant with the applicable U.S. Environmental Protection Agency (EPA) ENERGY STAR® specifications for computers. If a model family

does not offer ENERGY STAR® compliant configurations, then energy efficiency data listed is for a typically configured PC featuring a hard disk drive, a high efficiency power supply, and a Microsoft Windows® operating system.

Heat Dissipation*	**115VAC, 60Hz**	**230VAC, 50Hz**	**100VAC, 50Hz**
Normal Operation (Short idle)	245.27 BTU/hr	240.58 BTU/hr	241.53 BTU/hr
Normal Operation (Long idle)	237.40 BTU/hr	233.19 BTU/hr	235.55 BTU/hr
Sleep	23.66 BTU/hr	23.46 BTU/hr	23.67 BTU/hr
Off	8.0 BTU/hr	7.49 BTU/hr	7.70 BTU/hr

*NOTE: Heat dissipation is calculated based on the measured watts, assuming the service level is attained for one hour.

Declared Noise Emissions (in accordance with ISO 7779 and ISO 9296)	**Sound Power (L_{WAd}, bels)**	**Sound Pressure (L_{pAm}, decibels)**
Typically Configured – Idle	3.33	15.9
Fixed Disk – Drive Random Seek	4.1	23.9
Optical Drive – Active Mode	3.94	21.8

Longevity and Upgrading

This product can be upgraded, possibly extending its useful life by several years. Upgradeable features and/or components contained in the

Spare parts are available throughout the warranty period and or for up to “5” years after the end of production.

Additional Information

- This product is in compliance with the Restrictions of Hazardous Substances (RoHS) directive - 2011/65/EC.
- This HP product is designed to comply with the Waste Electrical and Electronic Equipment (WEEE) Directive – 2002/96/EC.
- This product is in compliance with California Proposition 65 (State of California; Safe Drinking Water and Toxic Enforcement Act of 1986).
- This product is in compliance with the IEEE 1680 (EPEAT) standard at the Gold level, see www.epeat.net
- Plastics parts weighing over 25 grams used in the product are marked per ISO11469 and ISO1043.
- This product is 94.6% recycle-able when properly disposed of at end of life.

Packaging Materials			
	External:	PAPER/Corrugated	1560 g
		PAPER/Paperboard	70 g
	Internal:	PLASTIC/EPE (Expanded Polyethylene)	636 g
		PLASTIC/Polyethylene low density - LDPE	50 g

The plastic packaging material contains at least 92.7% recycled content.

The corrugated paper packaging materials contains at least 35% recycled content.

RoHS Compliance

HP Inc. complies fully with materials regulations. We were among the first companies to extend the restrictions in the European Union (EU) Restriction of Hazardous Substances (RoHS) Directive to our products worldwide through the HP GSE. HP has contributed to the development of related legislation in

Europe, as well as China, India, and Vietnam.

We believe the RoHS directive and similar laws play an important role in promoting industry-wide elimination of substances of concern. We have supported the inclusion of additional substances—including PVC, BFRs, and certain phthalates—in future RoHS legislation that pertains to electrical and electronics products.

We met our voluntary objective to achieve worldwide compliance with the new EU RoHS requirements for virtually all relevant products by July 2013, and we will continue to extend the scope of the commitment to include further restricted substances as regulations continue to evolve.

To obtain a copy of the HP RoHS Compliance Statement, see HP RoHS position statement.

Material Usage

This product does not contain any of the following substances in excess of regulatory limits (refer to the HP General Specification for the Environment at http://www.hp.com/hpinfo/globalcitizenship/environment/pdf/gse.pdf):

- Asbestos
- Certain Azo Colorants
- Certain Brominated Flame Retardants – may not be used as flame retardants in plastics
- Cadmium
- Chlorinated Hydrocarbons
- Chlorinated Paraffins
- Bis(2-Ethylhexyl) phthalate (DEHP)
- Benzyl butyl phthalate (BBP)
- Dibutyl phthalate (DBP)
- Diisobutyl phthalate (DIBP)
- Formaldehyde
- Halogenated Diphenyl Methanes
- Lead carbonates and sulfates
- Lead and Lead compounds
- Mercuric Oxide Batteries
- Nickel – finishes must not be used on the external surface designed to be frequently handled or carried by the user.
- Ozone Depleting Substances
- Polybrominated Biphenyls (PBBs)
- Polybrominated Biphenyl Ethers (PBBEs)
- Polybrominated Biphenyl Oxides (PBBOs)
- Polychlorinated Biphenyl (PCB)
- Polychlorinated Terphenyls (PCT)
- Polyvinyl Chloride (PVC) – except for wires and cables, and certain retail packaging has been voluntarily removed from most applications.
- Radioactive Substances
- Tributyl Tin (TBT), Triphenyl Tin (TPT), Tributyl Tin Oxide (TBTO)

Packaging Usage

HP follows these guidelines to decrease the environmental impact of product packaging:

- Eliminate the use of heavy metals such as lead, chromium, mercury and cadmium in packaging materials.
- Eliminate the use of ozone-depleting substances (ODS) in packaging materials.
- Design packaging materials for ease of disassembly.
- Maximize the use of post-consumer recycled content materials in packaging materials.
- Use readily recyclable packaging materials such as paper and corrugated materials.
- Reduce size and weight of packages to improve transportation fuel efficiency.

- Plastic packaging materials are marked according to ISO 11469 and DIN 6120 standards.

End-of-life Management and Recycling

HP offers end-of-life HP product return and recycling programs in many geographic areas. To recycle your product, please go to: http://www.hp.com/go/reuse-recycle or contact your nearest HP sales office. Products returned to HP will be recycled, recovered or disposed of in a responsible manner.

The EU WEEE directive (2002/95/EC) requires manufacturers to provide treatment information for each product type for use by treatment facilities. This information (product disassembly instructions) is posted on the Hewlett Packard web site at: http://www.hp.com/go/recyclers. These instructions may be used by recyclers and other WEEE treatment facilities as well as HP OEM customers who integrate and re-sell HP equipment.

HP, Inc. Corporate Environmental Information

For more information about HP's commitment to the environment:

Global Citizenship Report
http://www.hp.com/hpinfo/globalcitizenship/gcreport/index.html
Eco-label certifications
http://www8.hp.com/us/en/hp-information/environment/ecolabels.html
ISO 14001 certificates:
http://h20195.www2.hp.com/V2/GetDocument.aspx?docname=c04755842
and
http://www.hp.com/hpinfo/globalcitizenship/environment/pdf/cert.pdf

footnotes

1. Percentage of ocean-bound plastic contained in each component varies by product
2. Recycled plastic content percentage is based on the definition set in the IEEE 1680.1-2018 standard.
3. External power supplies, WWAN modules, power cords, cables and peripherals excluded.
4. 100% outer box packaging and corrugated cushions made from sustainably sourced certified and recycled fibers.
5. Fiber cushions made from 100% recycled wood fiber and organic materials.
6. Plastic cushions are made from >90% recycled plastic.
7. Disclaimer: recycled metal is expressed as a percentage of the total weight of the metal according to ISO 14021 definitions for metal parts over 25 grams.

Manageability

Industry Standard Specifications

This product meets the following industry standard specifications for manageability functionality:

- DASH 1.2 (via Realtek LAN on motherboard)

AMD DASH Manageability

Provides AMD DASH Manageability functions and features including: Power Management (on, off, reset, graceful shutdown, sleep and hibernate)

- Support in Max Power Savings (Shutdown and Hibernate Modes)
- Hardware Inventory (includes BIOS)
- Indications and Events Alerting
- Text Redirection (SOL)
- USB Redirection
- KVM Redirection
- Wake-on-LAN (WOL), even with Maximum Power Savings Enabled
- DASH 1.2 compliance

AMD Pro Technology

The HP Z6A G5 supports AMD Pro Technology for its manageability solution.

System Technical Specifications

Remote Manageability Software Solutions	The HP Z6A G5 Workstation is supported on the following remote manageability software consoles: • Realtek Management Console • Microsoft System Center Configuration Manager with AMPS plugin. • AMD Management Console • DASH CLI Command Line Tool For questions or support for manageability needs, please visit http://www.hp.com/go/clientmanagement
HP Remote System Controller	Supported

Technical Specifications - Storage Drives

STORAGE/HARD DRIVES

Performance PCIe SSDs for HP Workstations	**Z Turbo 512GB 2280 PCIe-4x4 TLC SSD**	**Capacity**	512GB	
		Protocol	PCIe	
		Form Factor	M.2	
		Controller	NVMe	
		NAND Type	3D TLC	
		Endurance	300TBW (TB Written)	
		Reliability	1.5M hours	
		Rated for 24/7/365 operation	No	
		Interface	PCI Express 4.0 x4 electrical	
		Operating Temperature	32° to 158° F (0° to 70° C)	
		Performance	**Sequential Read**	up to 6400MB/s*
			Sequential Write	up to 3400MB/s*
			Random Read	up to 600K IOPS*
			Random Write	up to 600K IOPS*

*Actual performance may vary.

NOTE: For storage drives, GB = 1 billion bytes. TB = 1 trillion bytes. Actual formatted capacity is less. Up to 36GB of system disk (for Windows) is reserved for system recovery software.

Z Turbo 512GB 2280 PCIe-4x4 SED OPAL2 TLC M.2 SSD	**Capacity**	512GB	
	Protocol	PCIe	
	Form Factor	M.2	
	Controller	NVMe	
	NAND Type	3D TLC	
	Endurance	300TBW (TB Written)	
	Reliability	1.5M hours	
	Rated for 24/7/365 operation	No	
	Interface	PCI Express 4.0 x4 electrical	
	Operating Temperature	32° to 158° F (0° to 70° C)	
	Performance	**Sequential Read**	up to 6400MB/s*
		Sequential Write	up to 3400MB/s*
		Random Read	up to 600K IOPS*
		Random Write	up to 600K IOPS*
	Self-Encrypting Drive Support	OPAL 2	

*Actual performance may vary.

NOTE: For storage drives, GB = 1 billion bytes. TB = 1 trillion bytes. Actual formatted capacity is less. Up to 36GB of system disk (for Windows) is reserved for system recovery software.

Z Turbo 1TB 2280 PCIe-4x4 SED OPAL2 TLC M.2 SSD Module	**Capacity**	1TB
	Protocol	PCIe
	Form Factor	M.2
	Controller	NVMe
	NAND Type	3D TLC
	Endurance	400TBW (TB Written)
	Reliability	1.5M hours

	Rated for 24/7/365 operation	No	
	Interface	PCI Express 4.0 x4 electrical	
	Operating Temperature	32° to 158° F (0° to 70° C)	
	Performance	**Sequential Read**	up to 6500MB/s*
		Sequential Write	up to 5000MB/s*
		Random Read	up to 800K IOPS*
		Random Write	up to 800K IOPS*
	Self-Encrypting Drive Support	OPAL 2	

*Actual performance may vary.

NOTE: For storage drives, GB = 1 billion bytes. TB = 1 trillion bytes. Actual formatted capacity is less. Up to 36GB of system disk (for Windows) is reserved for system recovery software.

Z Turbo 1TB 2280 PCIe-4x4 TLC SSD	**Capacity**	1TB	
	Protocol	PCIe	
	Form Factor	M.2	
	Controller	NVMe	
	NAND Type	3D TLC	
	Endurance	400TBW (TB Written)	
	Reliability	1.5M hours	
	Rated for 24/7/365 operation	No	
	Interface	PCI Express 4.0 x4 electrical	
	Operating Temperature	32° to 158° F (0° to 70° C)	
	Performance	**Sequential Read**	up to 6500MB/s*
		Sequential Write	up to 5000MB/s*
		Random Read	up to 800K IOPS*
		Random Write	up to 800K IOPS*

*Actual performance may vary.

NOTE: For storage drives, GB = 1 billion bytes. TB = 1 trillion bytes. Actual formatted capacity is less. Up to 36GB of system disk (for Windows) is reserved for system recovery software.

Z Turbo 2TB 2280 PCIe-4x4 SED OPAL2 TLC M.2 SSD	**Capacity**	2TB	
	Protocol	PCIe	
	Form Factor	M.2	
	Controller	NVMe	
	NAND Type	3D TLC	
	Endurance	500TBW (TB Written)	
	Reliability	1.5M hours	
	Rated for 24/7/365 operation	No	
	Interface	PCI Express 4.0 x4 electrical	
	Operating Temperature	32° to 158° F (0° to 70° C)	
	Performance	**Sequential Read**	up to 6500MB/s*
		Sequential Write	up to 5000MB/s*
		Random Read	up to 800K IOPS*
		Random Write	up to 800K IOPS*

	Self-Encrypting Drive Support	OPAL 2

*Actual performance may vary.

NOTE: For storage drives, GB = 1 billion bytes. TB = 1 trillion bytes. Actual formatted capacity is less. Up to 36GB of system disk (for Windows) is reserved for system recovery software.

Z Turbo 2TB 2280 PCIe-4x4 TLC SSD	**Capacity**	2TB	
	Protocol	PCIe	
	Form Factor	M.2	
	Controller	NVMe	
	NAND Type	3D TLC	
	Endurance	500TBW (TB Written)	
	Reliability	1.5M hours	
	Rated for 24/7/365 operation	No	
	Interface	PCI Express 4.0 x4 electrical	
	Operating Temperature	32° to 158° F (0° to 70° C)	
	Performance	**Sequential Read**	up to 6500MB/s*
		Sequential Write	up to 5000MB/s*
		Random Read	up to 800K IOPS*
		Random Write	up to 800K IOPS*

*Actual performance may vary.

NOTE: For storage drives, GB = 1 billion bytes. TB = 1 trillion bytes. Actual formatted capacity is less. Up to 36GB of system disk (for Windows) is reserved for system recovery software.

Z Turbo 4TB 2280 PCIe-4x4 TLC M.2 SSD	**Capacity**	4TB	
	Protocol	PCIe	
	Form Factor	M.2	
	Controller	NVMe	
	NAND Type	3D TLC	
	Endurance	600TBW (TB Written)	
	Reliability	1.5M hours	
	Rated for 24/7/365 operation	No	
	Interface	PCI Express 4.0 x4 electrical	
	Operating Temperature	32° to 158° F (0° to 70° C)	
	Performance	**Sequential Read**	up to 6500MB/s*
		Sequential Write	up to 5000MB/s*
		Random Read	up to 700K IOPS*
		Random Write	up to 700K IOPS*

*Actual performance may vary.

NOTE: For storage drives, GB = 1 billion bytes. TB = 1 trillion bytes. Actual formatted capacity is less. Up to 36GB of system disk (for Windows) is reserved for system recovery software.

Z Turbo 4TB 2280 PCIe-4x4 SED OPAL2 TLC M.2 SSD	**Capacity**	4TB
	Protocol	PCIe
	Form Factor	M.2
	Controller	NVMe
	NAND Type	3D TLC

		Endurance	600TBW (TB Written)	
		Reliability	1.5M hours	
		Rated for 24/7/365 operation	No	
		Interface	PCI Express 4.0 x4 electrical	
		Operating Temperature	32° to 158° F (0° to 70° C)	
		Performance	**Sequential Read**	up to 6500MB/s*
			Sequential Write	up to 5000MB/s*
			Random Read	up to 700K IOPS*
			Random Write	up to 700K IOPS*
		Self-Encrypting Drive Support	OPAL 2	

*Actual performance may vary.

NOTE: For storage drives, GB = 1 billion bytes. TB = 1 trillion bytes. Actual formatted capacity is less. Up to 36GB of system disk (for Windows) is reserved for system recovery software.

Performance PCIe SSDs for HP Quad Pro Carrier	**HP Z Turbo Drive Quad Pro 512GB SSD**	**Capacity**	512GB	
		Protocol	PCIe	
		Form Factor	M.2	
		Controller	NVMe	
		NAND Type	3D TLC	
		Endurance	300TBW (TB Written)	
		Reliability	1.5M hours	
		Rated for 24/7/365 operation	No	
		Interface	PCI Express 4.0 x4 electrical	
		Operating Temperature	32° to 158° F (0° to 70° C)	
		Performance	**Sequential Read**	up to 6400MB/s*
			Sequential Write	up to 3400MB/s*
			Random Read	up to 600K IOPS*
			Random Write	up to 600K IOPS*

*Actual performance may vary.

NOTE: For storage drives, GB = 1 billion bytes. TB = 1 trillion bytes. Actual formatted capacity is less. Up to 36GB of system disk (for Windows) is reserved for system recovery software.

	HP Z Turbo Drive Quad Pro 1TB SSD	**Capacity**	1TB	
		Protocol	PCIe	
		Form Factor	M.2	
		Controller	NVMe	
		NAND Type	3D TLC	
		Endurance	400TBW (TB Written)	
		Reliability	1.5M hours	
		Rated for 24/7/365 operation	No	
		Interface	PCI Express 4.0 x4 electrical	
		Operating Temperature	32° to 158° F (0° to 70° C)	
		Performance	**Sequential Read**	up to 6500MB/s*
			Sequential Write	up to 5000MB/s*

		Random Read	up to 800K IOPS*
		Random Write	up to 800K IOPS*

*Actual performance may vary.
NOTE: For storage drives, GB = 1 billion bytes. TB = 1 trillion bytes. Actual formatted capacity is less. Up to 36GB of system disk (for Windows) is reserved for system recovery software.

HP Z Turbo Drive Quad Pro 2TB SSD	**Capacity**	2TB	
	Protocol	PCIe	
	Form Factor	M.2	
	Controller	NVMe	
	NAND Type	3D TLC	
	Endurance	500TBW (TB Written)	
	Reliability	1.5M hours	
	Rated for 24/7/365 operation	No	
	Interface	PCI Express 4.0 x4 electrical	
	Operating Temperature	32° to 158° F (0° to 70° C)	
	Performance	**Sequential Read**	up to 6500MB/s*
		Sequential Write	up to 5000MB/s*
		Random Read	up to 800K IOPS*
		Random Write	up to 800K IOPS*

*Actual performance may vary.
NOTE: For storage drives, GB = 1 billion bytes. TB = 1 trillion bytes. Actual formatted capacity is less. Up to 36GB of system disk (for Windows) is reserved for system recovery software.

HP Z Turbo Drive Quad Pro 4TB SSD	**Capacity**	4TB	
	Protocol	PCIe	
	Form Factor	M.2	
	Controller	NVMe	
	NAND Type	3D TLC	
	Endurance	500TBW (TB Written)	
	Reliability	1.5M hours	
	Rated for 24/7/365 operation	No	
	Interface	PCI Express 4.0 x4 electrical	
	Operating Temperature	32° to 158° F (0° to 70° C)	
	Performance	**Sequential Read**	up to 6500MB/s*
		Sequential Write	up to 5000MB/s*
		Random Read	up to 800K IOPS*
		Random Write	up to 800K IOPS*

*Actual performance may vary.
NOTE: For storage drives, GB = 1 billion bytes. TB = 1 trillion bytes. Actual formatted capacity is less. Up to 36GB of system disk (for Windows) is reserved for system recovery software.

Performance PCIe SSDs for HP Dual Pro Carrier	**HP Z Turbo Drive Dual Pro 512GB SSD**	**Capacity**	512GB
		Protocol	PCIe
		Form Factor	M.2
		Controller	NVMe

	NAND Type	3D TLC	
	Endurance	300TBW (TB Written)	
	Reliability	1.5M hours	
	Rated for 24/7/365 operation	No	
	Interface	PCI Express 4.0 x4 electrical	
	Operating Temperature	32° to 158° F (0° to 70° C)	
	Performance	**Sequential Read**	up to 6400MB/s*
		Sequential Write	up to 3400MB/s*
		Random Read	up to 600K IOPS*
		Random Write	up to 600K IOPS*

*Actual performance may vary.

NOTE: For storage drives, GB = 1 billion bytes. TB = 1 trillion bytes. Actual formatted capacity is less. Up to 36GB of system disk (for Windows) is reserved for system recovery software.

HP Z Turbo Drive Dual Pro 1TB SSD	**Capacity**	1TB	
	Protocol	PCIe	
	Form Factor	M.2	
	Controller	NVMe	
	NAND Type	3D TLC	
	Endurance	400TBW (TB Written)	
	Reliability	1.5M hours	
	Rated for 24/7/365 operation	No	
	Interface	PCI Express 4.0 x4 electrical	
	Operating Temperature	32° to 158° F (0° to 70° C)	
	Performance	**Sequential Read**	up to 6500MB/s*
		Sequential Write	up to 5000MB/s*
		Random Read	up to 800K IOPS*
		Random Write	up to 800K IOPS*

*Actual performance may vary.

NOTE: For storage drives, GB = 1 billion bytes. TB = 1 trillion bytes. Actual formatted capacity is less. Up to 36GB of system disk (for Windows) is reserved for system recovery software.

HP Z Turbo Drive Dual Pro 2TB SSD	**Capacity**	2TB	
	Protocol	PCIe	
	Form Factor	M.2	
	Controller	NVMe	
	NAND Type	3D TLC	
	Endurance	500TBW (TB Written)	
	Reliability	1.5M hours	
	Rated for 24/7/365 operation	No	
	Interface	PCI Express 4.0 x4 electrical	
	Operating Temperature	32° to 158° F (0° to 70° C)	
	Performance	**Sequential Read**	up to 6500MB/s*
		Sequential Write	up to 5000MB/s*
		Random Read	up to 800K IOPS*

Technical Specifications - Storage Drives

			Random Write	up to 800K IOPS*

*Actual performance may vary.
NOTE: For storage drives, GB = 1 billion bytes. TB = 1 trillion bytes. Actual formatted capacity is less. Up to 36GB of system disk (for Windows) is reserved for system recovery software.

	HP Z Turbo Drive Dual Pro 4TB SSD	**Capacity**	4TB	
		Protocol	PCIe	
		Form Factor	M.2	
		Controller	NVMe	
		NAND Type	3D TLC	
		Endurance	500TBW (TB Written)	
		Reliability	1.5M hours	
		Rated for 24/7/365 operation	No	
		Interface	PCI Express 4.0 x4 electrical	
		Operating Temperature	32° to 158° F (0° to 70° C)	
		Performance	**Sequential Read**	up to 6500MB/s*
			Sequential Write	up to 5000MB/s*
			Random Read	up to 800K IOPS*
			Random Write	up to 800K IOPS*

*Actual performance may vary.
NOTE: For storage drives, GB = 1 billion bytes. TB = 1 trillion bytes. Actual formatted capacity is less. Up to 36GB of system disk (for Windows) is reserved for system recovery software.

SATA Hard Drives for HP Workstations	**1TB 7200RPM SATA 3.5in Enterprise HDD**	**Capacity**	1TB	
		Protocol	SATA	
		Form Factor	3.5"	
		Controller	AHCI	
		Reliability	2.0M hours	
		Rated Power On Hours	8760/yr	
		Annualized Failure Rate (based on Rated POH)	<0.62%	
		Rated for 24/7/365 operation	YES	
		Height	1 in; 2.54 cm	
		Width	**Media Diameter**	3.5 in; 8.9 cm
			Physical Size	4 in; 10.17 cm
		Interface	Serial ATA (6.0Gb/s), NCQ enabled	
		Synchronous Transfer Rate (Maximum)	Up to 600MB/s *	
		Buffer	128MB	
		Cache	Adaptive	
		Seek Time (typical reads, includes controller overhead, including settling)	**Single Track**	0.32 ms *
			Average	7.45 ms *
			Full Stroke	14.2 ms *
		Rotational Speed	7,200 rpm	
		Logical Blocks	1,953,525,168	

	Operating Temperature	41° to 131° F (5° to 55° C)	
	Performance	**Sequential Read**	up to 226MB/s*
		Sequential Write	up to 226MB/s*

*Actual performance may vary.

NOTE: For storage drives, GB = 1 billion bytes. TB = 1 trillion bytes. Actual formatted capacity is less. Up to 36GB of system disk (for Windows) is reserved for system recovery software.

2TB 7200RPM SATA 3.5in Enterprise HDD	**Capacity**	2TB	
	Protocol	SATA	
	Form Factor	3.5"	
	Controller	AHCI	
	Reliability	2.0M hours	
	Rated Power On Hours	8760/yr	
	Annualized Failure Rate (based on Rated POH)	<0.62%	
	Rated for 24/7/365 operation	YES	
	Height	1 in; 2.54 cm	
	Width	**Media Diameter**	3.5 in; 8.9 cm
		Physical Size	4 in; 10.17 cm
	Interface	Serial ATA (6.0Gb/s), NCQ enabled	
	Synchronous Transfer Rate (Maximum)	Up to 600MB/s *	
	Buffer	128MB	
	Cache	Adaptive	
	Seek Time (typical reads, includes controller overhead, including settling)	**Single Track**	0.7 ms *
		Average	8.5 ms *
		Full Stroke	15.7 ms *
	Rotational Speed	7,200 rpm	
	Logical Blocks	3,907,029,168	
	Operating Temperature	41° to 131° F (5° to 55° C)	
	Performance	**Sequential Read**	up to 226MB/s*
		Sequential Write	up to 226MB/s*

*Actual performance may vary.

NOTE: For storage drives, GB = 1 billion bytes. TB = 1 trillion bytes. Actual formatted capacity is less. Up to 36GB of system disk (for Windows) is reserved for system recovery software.

4TB 7200 RPM SATA 3.5in Enterprise HDD	**Capacity**	4TB
	Protocol	SATA
	Form Factor	3.5"
	Controller	AHCI
	Reliability	2.0M hours
	Rated Power On Hours	8760/yr
	Annualized Failure Rate (based on Rated POH)	<0.62%
	Rated for 24/7/365 operation	YES
	Height	1 in; 2.54 cm

Technical Specifications - Storage Drives

	Width	**Media Diameter**	3.5 in; 8.9 cm
		Physical Size	4 in; 10.17 cm
	Interface	Serial ATA (6.0Gb/s), NCQ enabled	
	Synchronous Transfer Rate (Maximum)	Up to 600MB/s *	
	Buffer	256MB	
	Cache	Adaptive	
	Seek Time (typical reads, includes controller overhead, including settling)	**Single Track**	0.7 ms *
		Average	8.5 ms *
		Full Stroke	15.7 ms *
	Rotational Speed	7,200 rpm	
	Logical Blocks	7,814,037,168	
	Operating Temperature	41° to 131° F (5° to 55° C)	
	Performance	**Sequential Read**	up to 226MB/s*
		Sequential Write	up to 226MB/s*

*Actual performance may vary.

NOTE: For storage drives, GB = 1 billion bytes. TB = 1 trillion bytes. Actual formatted capacity is less. Up to 36GB of system disk (for Windows) is reserved for system recovery software.

8TB 7200RPM SATA 3.5in Enterprise HDD	**Capacity**	8TB	
	Protocol	SATA	
	Form Factor	3.5"	
	Controller	AHCI	
	Reliability	2.0M hours	
	Rated Power On Hours	8760/yr	
	Annualized Failure Rate (based on Rated POH)	<0.62%	
	Rated for 24/7/365 operation	YES	
	Height	1 in; 2.54 cm	
	Width	**Media Diameter**	3.5 in; 8.9 cm
		Physical Size	4 in; 10.17 cm
	Interface	Serial ATA (6.0Gb/s), NCQ enabled	
	Synchronous Transfer Rate (Maximum)	Up to 600MB/s *	
	Buffer	256MB	
	Cache	Adaptive	
	Seek Time (typical reads, includes controller overhead, including settling)	**Single Track**	0.7 ms *
		Average	8.5 ms *
		Full Stroke	15.7 ms *
	Rotational Speed	7,200 rpm	
	Logical Blocks	15,628,053,168	
	Operating Temperature	41° to 140° F (5° to 60° C)	
	Performance	**Sequential Read**	up to 226MB/s*
		Sequential Write	up to 226MB/s*

*Actual performance may vary.

Technical Specifications - Storage Drives

NOTE: For storage drives, GB = 1 billion bytes. TB = 1 trillion bytes. Actual formatted capacity is less. Up to 36GB of system disk (for Windows) is reserved for system recovery software.

12TB 7200 RPM SATA-6G 3.5in Enterprise HDD	**Capacity**	12TB	
	Protocol	SATA	
	Form Factor	3.5"	
	Controller	AHCI	
	Reliability	2.0M hours	
	Rated Power On Hours	8760/yr	
	Annualized Failure Rate (based on Rated POH)	<0.62%	
	Rated for 24/7/365 operation	YES	
	Height	1 in; 2.54 cm	
	Width	**Media Diameter**	3.5 in; 8.9 cm
		Physical Size	4 in; 10.17 cm
	Interface	Serial ATA (6.0Gb/s), NCQ enabled	
	Synchronous Transfer Rate (Maximum)	Up to 600MB/s *	
	Buffer	256MB	
	Cache	Adaptive	
	Seek Time (typical reads, includes controller overhead, including settling)	**Single Track**	0.7 ms *
		Average	8.5 ms *
		Full Stroke	15.7 ms *
	Rotational Speed	7,200 rpm	
	Logical Blocks	23,437,770,752	
	Operating Temperature	41° to 140° F (5° to 60° C)	
	Performance	**Sequential Read**	up to 226MB/s*
		Sequential Write	up to 226MB/s*

*Actual performance may vary.

NOTE: For storage drives, GB = 1 billion bytes. TB = 1 trillion bytes. Actual formatted capacity is less. Up to 36GB of system disk (for Windows) is reserved for system recovery software.

Technical Specifications - Graphics

GRAPHICS

NVIDIA® A800 48GB	**Form Factor**	Full-Height Dual Slot (4.4” Height x 10.5” Length)
	Max Power Consumption	240W
	GPU Memory	40GB HBM2 Memory Bandwidth: 1,555 GB/s Memory Width: 5,120-bit
	Connectors	NVLink Requires: 1x 16-pin CEM 5 power connector (adapter may be needed)
	Maximum Resolution	Not supported - No display out
	Bus Type	PCI Express 4.0 x16
	Available Graphics Drivers	Windows 10 Windows 11
NVIDIA® RTX™ 6000 Ada 48GB	**Form Factor**	Full-Height Dual Slot (4.4” Height x 10.5” Length) Weight: 1230 grams / 2.71 lbs (with extender)
	Max Power Consumption	Power: 300 Watts Cooling: Active
	GPU Memory	48GB GDDR6 memory ECC Memory Bandwidth: Up to 960 GB/s Memory Width: 384 bits
	Connectors	4x DisplayPort 1.4a Quadro Sync II connector Stereo Sync Requires CEM 5.0 16-pin auxiliary power adapter
	Maximum Resolution	7680x4320 @ 120Hz
	Bus Type	PCI Express 4.0 x16
	Available Graphics Drivers	Windows 11 Windows 10 Linux® 64-bit
AMD® Radeon™ Pro W7900 48GB	**Form Factor**	Full-Height Triple Slot (4.4” Height x 10.5” Length)
	Max Power Consumption	Power: 295W Cooling: Active
	GPU Memory	48GB GDDR6 memory Memory Bandwidth: Up to 864 GB/s Memory Width: 384 bit
	Connectors	3x DisplayPort 2.1 1x Enhanced Mini DisplayPort 2.1 Requires 2x 8-pin auxiliary power connectors
	Maximum Resolution	12288x6912 @ 120Hz
	Bus Type	PCI Express 4.0 x16
	Available Graphics Drivers	Windows 11 Windows 10 Linux® 64-bit
NVIDIA® RTX™ 5000 Ada	**Form Factor**	Full-Height Dual Slot (5.0” Height x 13.85” Length)

Technical Specifications - Graphics

32GB		Weight: 1130 grams / 2.49 lbs (excluding extender)
	Max Power Consumption	Power: 250 Watts Cooling: Active
	GPU Memory	32GB GDDR6 memory ECC Memory Bandwidth: Up to 576 GB/s Memory Width: 256 bits
	Connectors	4x DisplayPort 1.4a Quadro Sync II connector Stereo Sync Requires CEM 5.0 16-pin auxiliary power adapter
	Maximum Resolution	7680x4320 @ 120Hz
	Bus Type	PCI Express 4.0 x16
	Available Graphics Drivers	Windows 11 Windows 10 Linux® 64-bit

NVIDIA® RTX 4500 Ada 24GB	**Form Factor**	Full-Height Dual Slot (4.4” Height x 10.5” Length)
	Max Power Consumption	210W
	GPU Memory	24GB GDDR6 Memory Bandwidth: 432 GB/s Memory Width: 192-bit
	Connectors	4x DisplayPort 1.4a Requires: 1x 16-pin CEM 5 power connector (adapter may be needed)
	Maximum Resolution	4x @ 4096 x 2160 @ 120Hz 4x @ 5120 x 2880 @ 60Hz 2x @ 7680 x 4320 @ 60Hz
	Bus Type	PCI Express 4.0 x16
	Available Graphics Drivers	Windows 10 Windows 11

NVIDIA® RTX A4500 20GB	**Form Factor**	Full-Height Dual Slot (4.4” Height x 10.5” Length) Weight: 1049 grams + 80 grams extender
	Max Power Consumption	Power: 200W Cooling: Active
	GPU Memory	20GB GDDR6 memory Memory Bandwidth: Up to 640 GB/s Memory Width: 320 bit
	Connectors	4x DisplayPort 1.4a Quadro Sync II connector NVLink® Stereo Sync Requires 8-pin auxiliary power
	Maximum Resolution	7680x4320 @ 120Hz
	Bus Type	PCI Express 4.0 x16
	Available Graphics Drivers	Windows 11 Windows 10 Linux® 64-bit

Technical Specifications - Graphics

NVIDIA® RTX 4000 Ada 20GB	**Form Factor**	Full-Height Single Slot (4.4” Height x 11.5” Length)
	Max Power Consumption	130W
	GPU Memory	20GB GDDR6 Memory Bandwidth: 360 GB/s Memory Width: 160-bit
	Connectors	4x DisplayPort 1.4a Requires: 1x 16-pin CEM 5 power connector (adapter may be needed)
	Maximum Resolution	4x @ 4096 x 2160 @ 120Hz 4x @ 5120 x 2880 @ 60Hz 2x @ 7680 x 4320 @ 60Hz
	Bus Type	PCI Express 4.0 x16
	Available Graphics Drivers	Windows 10 Windows 11
NVIDIA® RTX A4000 16GB	**Form Factor**	Full-Height Single Slot (4.4” Height x 9.5” Length) Weight: 500 grams
	Max Power Consumption	Power: 140W Cooling: Active
	GPU Memory	16GB GDDR6 memory Memory Bandwidth: Up to 448 GB/s Memory Width: 256 bit
	Connectors	4x DisplayPort 1.4a Quadro Sync II connector Stereo Sync Requires 6-pin auxiliary power
	Maximum Resolution	7680x4320 @ 120Hz
	Bus Type	PCI Express 4.0 x16
	Available Graphics Drivers	Windows 11 Windows 10 Linux® 64-bit
NVIDIA® RTX™ 2000 Ada 16GB	**Form Factor**	Half Height Dual Slot (2.7" Height x 6.7" Length)
	Max Power Consumption	70W
	GPU Memory	16GB GDDR6 Memory Bandwidth: 224 GB/s Memory Width: 128-bit
	Connectors	4x Mini DisplayPort 1.4a
	Maximum Resolution	4x 4096 x 2160 @ 120 Hz 4x 5120 x 2880 @ 60 Hz 2x 7680 x 4320 @ 60 Hz
	Bus Type	PCI Express 4.0 x8
	Available Graphics Drivers	Windows 10 Windows 11
NVIDIA® RTX A2000	**Form Factor**	Half-Height Dual Slot (2.713”

Technical Specifications - Graphics

12GB		Height x 6.6” Length) Weight: 306 grams
	Max Power Consumption	Power: 70W Cooling: Active
	GPU Memory	12GB GDDR6 memory Memory Bandwidth: Up to 288 GB/s Memory Width: 192 bit
	Connectors	4x mini-DisplayPort 1.4a
	Maximum Resolution	7680x4320 @ 120Hz
	Bus Type	PCI Express 4.0 x16
	Available Graphics Drivers	Windows 11 Windows 10 Linux® 64-bit
NVIDIA® RTX™ A1000 8GB	**Form Factor**	Half Height Single Slot (2.7" Height x 6.4" Length)
	Max Power Consumption	50W
	GPU Memory	8GB GDDR6 Memory Bandwidth: 192 GB/s Memory Width: 128-bit
	Connectors	4x Mini DisplayPort 1.4a
	Maximum Resolution	4x 4096 x 2160 @ 120 Hz 4x 5120 x 2880 @ 60 Hz 2x 7680 x 4320 @ 60 Hz
	Bus Type	PCI Express 4.0 x8
	Available Graphics Drivers	Windows 10 Windows 11
NVIDIA® T1000 8GB	**Form Factor**	Half-Height Single Slot (2.713” Height x 6.137” Length) Weight: 132.6 grams
	Max Power Consumption	Power: 50W Cooling: Active
	GPU Memory	8GB GDDR6 memory Memory Bandwidth: Up to 160 GB/s Memory Width: 128 bit
	Connectors	4x mini-DisplayPort 1.4a
	Maximum Resolution	7680x4320 @ 120Hz
	Bus Type	PCI Express 3.0 x16
	Available Graphics Drivers	Windows 11 Windows 10 Linux® 64-bit
NVIDIA® T400 4GB Graphics	**Form Factor**	Half-Height Single Slot (2.713” Height x 6.137” Length) Weight: 123.5 grams
	Max Power Consumption	Power: 30W

Technical Specifications - Graphics

		Cooling: Active
	GPU Memory	4GB GDDR6 memory Memory Bandwidth: Up to 80 GB/s Memory Width: 64 bit
	Connectors	3x mini-DisplayPort 1.4a
	Maximum Resolution	7680x4320 @ 120Hz
	Bus Type	PCI Express 3.0 x16
	Available Graphics Drivers	Windows 11 Windows 10 Linux® 64-bit
AMD® Radeon™ Pro W7900 48GB	**Form Factor**	Full-Height Triple Slot (4.38” Height x 11.0” Length)
	Max Power Consumption	295W
	GPU Memory	48GB GDDR6 Memory Bandwidth: 864 GB/s Memory Width: 384-bit
	Connectors	3x DP 2.1 + 1x Enhanced Mini DP 2.1 Requires: 2x 8-pin PCIe Aux Power
	Maximum Resolution	4x @ 4096 x 2160 (4K DCI) @ 120Hz with DSC 2x @ 6144 x 3456 (6K) 12-bit HDR @ 60Hz Uncompressed 1x @ 7680 x 4320 (8K) 12-bit HDR @ 60Hz Uncompressed 1x @ 12288 x 6912 (12K) @ 120Hz with DS
	Bus Type	PCI Express 4.0 x16
	Available Graphics Drivers	Windows 10 Windows 11
	Note: Not available at launch; available early 2024	
AMD® Radeon™ Pro W7600 8GB	**Form Factor**	Full-Height Single Slot (4.38" Height x 9.5" Length)
	Max Power Consumption	130W
	GPU Memory	8GB GDDR6 Memory Bandwidth: 288 GB/s Memory Width: 128-bit
	Connectors	4x DP 2.1 Requires: 1x 6-pin PCIe Aux Power
	Maximum Resolution	4x @ 3840x2160 (4K) 4x @ 5120x2880 (5K) 2x @ 7680x4320 (8K)
	Bus Type	PCI Express 4.0 x8
	Available Graphics Drivers	Windows 10 Windows 11
AMD® Radeon™ Pro W7500 8GB	**Form Factor**	Full-Height Single Slot (4.38" Height x 8.5" Length)
	Max Power Consumption	70W
	GPU Memory	8 GB GDDR6 Memory Bandwidth: 173 GB/s

Technical Specifications - Graphics

		Memory Width: 128-bit
	Connectors	4x DP 2.1
	Maximum Resolution	4x @ 3840x2160 (4K) 4x @ 5120x2880 (5K) 2x @ 7680x4320 (8K)
	Bus Type	PCI Express 4.0 x8
	Available Graphics Drivers	Windows 10 Windows 11
AMD® Radeon™ RX 6400 4GB	**Form Factor**	Half-Height Single Slot (4.4" Height x 10.5" Length) Weight: 155 grams
	Max Power Consumption	Power: 50W Cooling: Active
	GPU Memory	4GB GDDR6 memory Memory Bandwidth: Memory Width:
	Connectors	1x DisplayPort 1.4a 1x HDMI
	Maximum Resolution	7680x4320 @ 60Hz
	Bus Type	PCI Express 4.0 x4
	Available Graphics Drivers	Windows 11 Windows 10 Linux® 64-bit

Notes for all graphics cards:

- Some graphics and GPU compute cards can consume a great deal of power, thus combinations of cards with other components may exceed a particular power supply's output capability.
- Some graphics and GPU compute cards require supplemental power cables. Not all chassis/PSU configurations have enough supplemental power cables of the correct type for all graphics configurations. Refer to table below for guidance on required power cables based on configured power supply and graphics.

PSU	**PSU Aux Power (Graphics)**	**Graphics Power Adapter/Dongle** (spare part number shown below)	**Graphics Power Connector** (per card)	**Max Graphics Card Config**
775W	2x PCIe (6+2)-pin	1x N38901-001 - 2x PCIe 8-pin to 1x CEM 5.0 16-pin	1x CEM 5.0 16-pin	1x NVIDIA A800 Active
		1x N38901-001 - 2x PCIe 8-pin to 1x CEM 5.0 16-pin	1x CEM 5.0 16-pin	1x NVIDIA RTX 6000 Ada
		1x N38901-001 - 2x PCIe 8-pin to 1x CEM 5.0 16-pin	1x CEM 5.0 16-pin	1x NVIDIA RTX 5000 Ada
		1x N38901-001 - 2x PCIe 8-pin to 1x CEM 5.0 16-pin	1x CEM 5.0 16-pin	1x NVIDIA RTX 4500 Ada
		2x N61947-001 - 1x PCIe 8-pin to 1x CEM 5.0 16-pin	1x CEM 5.0 16-pin	2x NVIDIA RTX 4000 Ada
			1x PCIe 8-pin	1x NVIDIA RTX A4500
			1x PCIe 8-pin	2x NVIDIA RTX A4000
			-	3x NVIDIA RTX A2000
			-	3x NVIDIA T1000
			-	3x NVIDIA T400

Technical Specifications - Graphics

			2x PCIe 8-pin	1x AMD Radeon Pro W7900
			1x PCIe 6-pin	2x AMD Radeon Pro W7600
			-	3x AMD Radeon Pro W7500
			-	1x AMD RX 6400
1125W [1125W (@100V)] 1275W [1125W (@115V)]	4x PCIe (6+2)-pin Optional: 1x Aux 8-pin	2x N38901-001 - 2x PCIe 8-pin to 1x CEM 5.0 16-pin	1x CEM 5.0 16-pin	2x NVIDIA A800 Active
		2x N38901-001 - 2x PCIe 8-pin to 1x CEM 5.0 16-pin	1x CEM 5.0 16-pin	2x NVIDIA RTX 6000 Ada
		3x N38901-001 - 2x PCIe 8-pin to 1x CEM 5.0 16-pin 1x M78883-001 - Aux 8-pin to 2x PCIe (6+2)-pin (3rd)	1x CEM 5.0 16-pin	3x NVIDIA RTX 5000 Ada
		3x N38901-001 - 2x PCIe 8-pin to 1x CEM 5.0 16-pin 1x M78883-001 - Aux 8-pin to 2x PCIe (6+2)-pin (3rd)	1x CEM 5.0 16-pin	3x NVIDIA RTX 4500 Ada
		3x N61947-001 - 1x PCIe 8-pin to 1x CEM 5.0 16-pin	1x CEM 5.0 16-pin	3x NVIDIA RTX 4000 Ada
			1x PCIe 8-pin	3x NVIDIA RTX A4500
			1x PCIe 8-pin	3x NVIDIA RTX A4000
			NA	3x NVIDIA RTX A2000
			NA	3x NVIDIA T1000
			NA	3x NVIDIA T400
			2x PCIe 8-pin	1x AMD Radeon Pro W7900
			1x PCIe 6-pin	3x AMD Radeon Pro W7600
			NA	3x AMD Radeon Pro W7500
			NA	1x AMD RX 6400
1450W [1125W (@200V)]	4x PCIe (6+2)-pin Optional: 1x Aux 8-pin	2x N38901-001 - 2x PCIe 8-pin to 1x CEM 5.0 16-pin	1x CEM 5.0 16-pin	2x NVIDIA A800 Active
		3x N38901-001 - 2x PCIe 8-pin to 1x CEM 5.0 16-pin 1x M78883-001 - Aux 8-pin to 2x PCIe (6+2)-pin (3rd)	1x CEM 5.0 16-pin	3x NVIDIA RTX 6000 Ada
		3x N38901-001 - 2x PCIe 8-pin to 1x CEM 5.0 16-pin 1x M78883-001 - Aux 8-pin to 2x PCIe (6+2)-pin (3rd)	1x CEM 5.0 16-pin	3x NVIDIA RTX 5000 Ada
		3x N38901-001 - 2x PCIe 8-pin to 1x CEM 5.0 16-pin 1x M78883-001 - Aux 8-pin to 2x PCIe (6+2)-pin (3rd)	1x CEM 5.0 16-pin	3x NVIDIA RTX 4500 Ada
		3x N61947-001 - 1x PCIe 8-pin to 1x CEM 5.0 16-pin	1x CEM 5.0 16-pin	3x NVIDIA RTX 4000 Ada
			1x PCIe 8-pin	3x NVIDIA RTX A4500
			1x PCIe 8-pin	3x NVIDIA RTX A4000
			NA	3x NVIDIA RTX A2000
			NA	3x NVIDIA T1000
			NA	3x NVIDIA T400
			2x PCIe 8-pin	1x AMD Radeon Pro W7900
			1x PCIe 6-pin	3x AMD Radeon Pro W7600
			NA	3x AMD Radeon Pro W7500
			NA	1x AMD RX 6400

Technical Specifications - Optical and Removable Storage

OPTICAL AND REMOVABLE STORAGE

HP 9.5mm Slim Blu-Ray Writer	**Description**	9.5mm height, tray-load	
	Mounting Orientation	Either horizontal or vertical	
	Interface Type	SATA/ATAPI	
	Dimensions (WxHxD)	128 x 9.5 x 127mm	
	Supported Media Types	BD-ROM BD-R BD-RE DVD+R DVD+RW DVD+R DL DVD-R DL DVD-R DVD-RW CD-R CD-RW	
	Disc Capacity	**DVD-ROM**	8.5 GB DL or 4.7 GB standard
		Blu-ray	25 GB (single-layer) 50 GB (dual-layer) 100/128 GB (BDXL)
		Full Stroke DVD	< 230 ms (seek)
		Full Stroke CD	< 220 ms (seek)
		Blu-ray	< 230 ms (seek) (Full Stroke Blu-ray)
		Startup Time	(Time to drive ready from tray loading) BD-ROM (SL/DL) 25S / 28S BD-R (SL/DL) 25S / 28S BD-RE (SL/DL) 25S / 28S DVD-ROM (SL/DL) 18S / 18S DVD-R (SL/DL) 25S / 25S DVD-RW 25S DVD+R (SL/DL) 25S / 25S DVD+RW 25S CD-ROM 15S
	Maximum Data Transfer Rates	**CD ROM Read**	CD-ROM, CD-R Up to 24X CD-RW Up to 24X
		DVD ROM Read	DVD+RW Up to 8X DVD-RW Up to 8X DVD+R DL Up to 8X DVD-R DL Up to 8X DVD-ROM Up to 8X DVD-ROM DL Up to 8X DVD+R Up to 8X DVD-R Up to 8X
		Blu-ray	BD-ROM Up to 6X BD-ROM DL Up to 6X BD-R Up to 6X BD-R DL Up to 6X BD-R Up to 6X BD-RE SL/DL Up to 6X

Technical Specifications - Optical and Removable Storage

Power	**Source**	SATA DC power receptacle
	DC Power Requirements	5 VDC ± 5%-100 mV ripple p-p
	DC Current	5 VDC -900 mA typical, 2000mA maximum
Operating Environmental (all conditions non-condensing)	**Temperature**	41° to 122° F (5° to 50° C)
	Relative Humidity	10% to 80%
	Maximum Wet Bulb Temperature	84° F (29° C)
Operating Systems Supported	Windows 11, Windows 10, Windows 7 Professional 64-bit, Red Hat® Enterprise Linux® (RHEL) 8, 9 Desktop/Workstation SUSE Linux® Enterprise Desktop 15 Ubuntu 20.04, 22.04 LTS No driver is required for this device. Native support is provided by the operating system.	
Kit Contents	9.5mm Slim BDXL Blu-Ray Writer, 5.25" ODD Bay adapter/carrier, slim SATA data/power cable, installation guide As Blu-ray is a new format containing new technologies, certain disc, digital connection, compatibility and/or performance issues may arise, and do not constitute defects in the product. Flawless playback on all systems is not guaranteed. In order for some Blu-ray titles to play, they may require a DVI or HDMI digital connection and your display may require HDCP support. HD-DVD movies cannot be played on this workstation.	

NOTE: HD-DVD disks cannot be played on the DVD-ROM drive. No support for DVD-RAM. Actual speeds may vary. Don't copy copyright-protected materials. Double Layer discs can store more data than single layer discs. Discs burned with this drive may not be compatible with many existing single-layer DVD drives and players. Flawless playback on all systems is not guaranteed.

HP 9.5mm Slim DVD Writer	**Description**	9.5mm height, tray-load
	Mounting Orientation	Either horizontal or vertical
	Interface Type	SATA/ATAPI
	Dimensions (WxHxD)	128 x 9.5 x 127mm
	Supported Media Types	DVD+R DVD+RW DVD+R DL DVD-R DL DVD-R DVD-RW CD-R CD-RW
	Disc Capacity	**DVD-ROM** 8.5 GB DL or 4.7 GB standard
		Full Stroke DVD < 200 ms (seek)
		Full Stroke CD < 200 ms (seek)
	Maximum Data Transfer Rates	**CD ROM Read** CD-ROM, CD-R Up to 24X CD-RW Up to 24X
		DVD ROM Read DVD+RW Up to 8X DVD-RW Up to 8X DVD+R DL Up to 8X DVD-R DL Up to 8X

Technical Specifications - Optical and Removable Storage

		DVD-ROM Up to 8X DVD-ROM DL Up to 8X DVD+R Up to 8X DVD-R Up to 8X
Power	**Source**	SATA DC power receptacle
	DC Power Requirements	5 VDC ± 5%-100 mV ripple p-p
	DC Current	5 VDC -< 800 mA typical, <1600 mA maximum
Operating Environmental (all conditions non-condensing)	**Temperature**	41° to 122° F (5° to 50° C)
	Relative Humidity	10% to 80%
	Maximum Wet Bulb Temperature	84° F (29° C)
Operating Systems Supported		Windows 11, Windows 10, Windows 7 Professional 64-bit, Windows Vista Business 64*, Windows 2000. Red Hat® Enterprise Linux® (RHEL) 8, 9 Desktop/Workstation SUSE Linux® Enterprise Desktop 15 Ubuntu 20.04, 22.04 LTS * No driver is required for this device. Native support is provided by the operating system
Kit Contents		HP SATA DVD Writer drive, installation guide.

NOTE: Actual speeds may vary. No support for DVD-RAM (DVD Writer). Does not permit copying of commercially available DVD movies or other copyright protected materials. Intended for creation and storage of your original material and other lawful uses. Double Layer discs can store more data than single layer discs. However, double-layer discs burned with this drive may not be compatible with many existing single-layer DVD drives and players.

Technical Specifications - Optical and Removable Storage

HP 9.5mm Slim DVD-ROM	**Description**	9.5mm height, tray-load	
	Mounting Orientation	Either horizontal or vertical	
	Interface Type	SATA/ATAPI	
	Dimensions (WxHxD)	128 x 9.5 x 127mm	
	Disc Capacity	**DVD-ROM**	Single layer: Up to 4.7 GB Double layer: Up to 8.5 GB
	Access Times	**DVD-ROM Single Layer**	< 110 ms (typical)
		CD-ROM Mode 1	< 110 ms (typical)
		Full Stroke DVD	< 230 ms (typical)
		Full Stroke CD	< 220 ms (typical)
	Power	**Source**	SATA DC power receptacle
		DC Power Requirements	5 VDC ± 5%-100 mV ripple p-p
		DC Current	5 VDC -< 800 mA typical, <1600 mA maximum
	Operating Environmental (all conditions non-condensing)	**Temperature**	41° to 122° F (5° to 50° C)
		Relative Humidity	10% to 80%
		Maximum Wet Bulb Temperature	84° F (29° C)
	Operating Systems Supported	Windows 11, Windows 10, Windows 8.1, Windows 7 Professional 64-bit Red Hat® Enterprise Linux® (RHEL) 8, 9 Desktop/Workstation SUSE Linux® Enterprise Desktop 15 Ubuntu 20.04, 22.04 LTS No driver is required for this device. Native support is provided by the operating system.	
	Kit Contents	9.5mm Slim DVD-ROM Drive, 5.25"" ODD Bay adapter/carrier, slim SATA data/power cable, installation guide	

NOTE: Actual speeds may vary. No support for DVD-RAM (DVD Writer). Does not permit copying of commercially available DVD movies or other copyright protected materials. Intended for creation and storage of your original material and other lawful uses. Double Layer discs can store more data than single layer discs. However, double-layer discs burned with this drive may not be compatible with many existing single-layer DVD drives and players.

Technical Specifications - Networking and Communications

NETWORKING AND COMMUNICATIONS

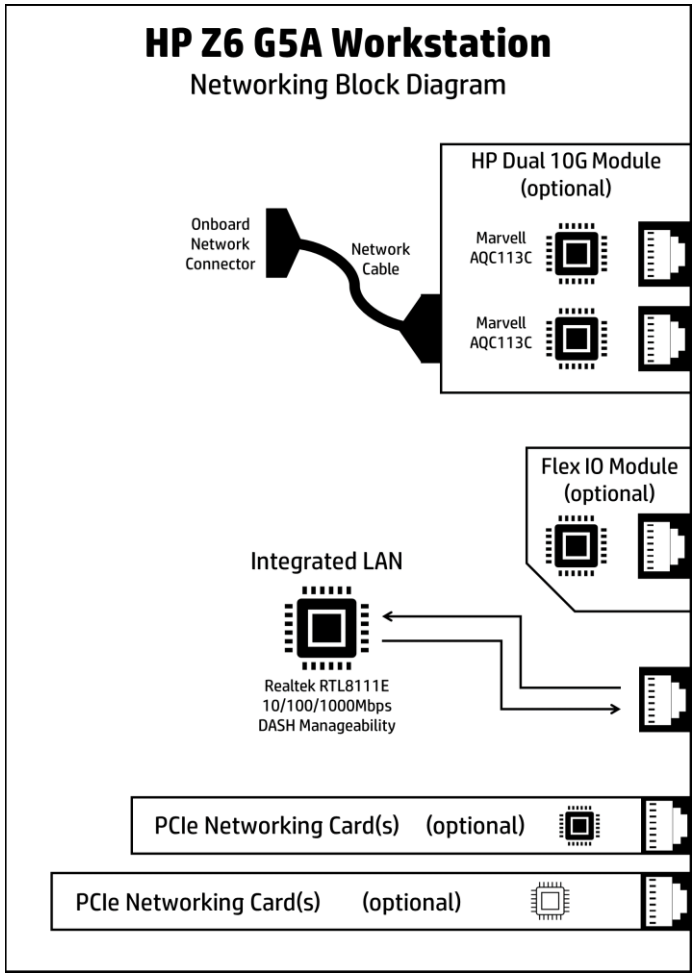

Realtek RTL 8111EPP (Integrated)	**Connector**	RJ-45 (Single Port)
	Cabling	Twisted Pair Cabling, up to 100 meter, 1GbE on CAT 5 UTP and up, 10Mbps on CAT 3 UTP
	Controller	Realtek RTL8111-EPP 1GbE platform LAN networking controller
	Memory	128 bit Tx Buffer, 512 bit Rx buffer
	Data Rates Supported	10/100/1000 Mbps
	Compliance	IEEE 802.3, 802.3u, 802.3ab, 802.1Q, 802.3az-2010 (EEE), 802.3x, 802.1P NDIS5, NDIS6 (IPv4, IPv6, TCP, UDP), Checksum and Segmentation Task-offload, EMAC-393 ProxZzzy ECMA proxy for sleeping host standard, PCIe 3.0 LTR
	Bus Architecture	PCI Express, USB Redirection, and SMBus
	Data Transfer Mode	PCIe-based interface for active state operation (S0 state) and SMBus for host and management traffic (Sx and low power states)
	Power Requirement	3.3V supplied by platform
	Boot ROM Support	Yes
	Network Transfer Mode	Full Duplex

Technical Specifications - Networking and Communications

	Network Transfer Rate	1000BASE-T Full-Duplex 100BASE-TX Full-Duplex 100BASE-TX Half-Duplex 10BASE-T Full-Duplex 10BASE-T Half-Duplex
	Management Capabilities	WOL, PXE, UEFI, ASF 2.0, DASH, Crossover Detection and Auto-correction, polarity correction, adaptive equalization, cross-talk and echo cancellation, timing recovery, error correction ACPI and OSPM, APM, Microsoft Wake Packet Detection, VLAN, RSS, OBFF, Speed Auto-Negotiation, Jumbo frames up to 9kB, software KVM,
NVIDIA® Mellanox® ConnectX-6 DX Dual Port 10/25GbE SFP28 NIC	**Connector**	2 x SFP28 Transceiver Cage (Dual Port)*
	Cabling	Depends on transceiver pairing. Typically OM4 or higher MMF LC fiber optic cabling with LC SFP28 Transceivers.
	Controller	ConnectX6-DX
	Memory	256Mbit SPI Quad Flash Device
	Data Rates Supported	1/10/25GbE * IEEE 802.3by, 802.3ae, 802.3ap, 802.3ad, 802.1AX, 802.1Q, 802.1P, 802.1Qau (QCN), 802.1Qaz (ETS), 802.1Qbb (PFC), 802.1Qbg, 1588v2 Jumbo frame support (9.6KB) CB/cTUVus/CE Compliant CE/FCC/VCCI/RCM Compliant RoHS/KCC/CAN ICES-3 (B)/NM EN 55035/55032 (Morocco)/UKCA Compliant
	Bus Architecture	PCIe Gen 4 x8
	Data Transfer Mode	PCI Express - stores and accesses Ethernet fabric connection information and packet data
	Power Requirements	11.5 Watts (typical)
	Network Transfer Rate	1Gbps, 10Gbps, 25Gbps * Note: Network Transfer Rate depends on transceiver model.*
	Kit Contents	NVIDIA® Mellanox® ConnectX-6 DX Dual Port 10/25GbE SFP28 NIC

* You must have a transceiver installed in order to connect this card to a network.

HP 25GbE SFP28 LC Fiber Optic Transceiver	**Connector**	LC Fiber Optic Connector
	Cabling	Typically OM4 or higher MMF LC fiber optic cabling, up to 100m on OM4, up to 70m on OM3
	Data Rates Supported	25Gbps
	Compliance	SFF-8472 and 8431, Hot pluggable SFP+ footprint
	Compatibility	Intended for use with NVIDIA Mellanox ConnectX-6 DX Dual Port 10/25GbE NIC
	Wavelength	850nm
	Kit Contents	25GbE SFP28 Transceiver

HP 10GbE SFP+ SR/SW LC Fiber Optic Transceiver	**Connector**	LC Fiber Optic Connector
	Cabling	Typically OM4 or higher MMF LC fiber optic cabling, up to 300m on MMF
	Data Rates Supported	10Gbps
	Compliance	SFF-8472 and 8431, Hot pluggable SFP+ footprint
	Compatibility	Intended for use with NVIDIA Mellanox ConnectX-6 DX Dual Port 10/25GbE NIC
	Wavelength	850nm
	Kit Contents	10GbE SFP+ Transceiver

HP Dual Port 10GBase-T NIC Module G2	**Networking Interface**	2 x RJ-45 (Dual Port)
	System Interface	Cabled from Dedicated Rear I/O Slot
	Controller	Marvell AQC113C
	Memory	128KB Tx Buffer, 192KB Rx Buffer on-chip
	Networking Speeds Supported	10Gbps, 5Gbps, 2.5Gbps,1Gbps, 100Mbps, 10Mbps
	Compliance	IEEE 802.3 - 2018, IEEE 802.1AS-2011
	Cabling (up to 100m)	Cat5e (or higher) for 1Gbps Cat6a (or higher) for 10Gbps
	Power Consumption (active-typical)	5.5W at 1Gbps 11.2W at 10Gbps
	Physical Dimensions	0.875 in x 3 in x 2.75 in
	Connect Speed LED Indicators	Link/Activity LED • Off = No link • Blinking = Activity Speed LED • Amber = 1Gbps • Green = 10Gbps
	Operating Temperature	0 °C to 55 °C (32 °F to 131 °F)

Intel® X550 10GBASE-T Dual Port NIC	**Connector**	2 x RJ-45 (Dual Port)
	Cabling	Cat5 (or higher) for 100Mbps Cat5e (or higher) for 1Gbps, 2.5Gbps, or 5Gbps Cat6 (or higher) for 10Gbps up to 55m Cat6a (or higher) for 10Gbps up to 100m
	Controller	Intel® X550-AT2
	Memory	Jumbo Frames up to 15.5KB, 64 Tx and 64 Rx Queues per port, 160KB/port of programmable memory transmit buffers
	Data Rates Supported	100Mbps (BASE-TX), 1Gbps (BASE-T, 2.5Gbps, 5Gbps, 10Gbps
	Compliance	802.1q (VLAN), 802.1Qbb, 802.1p, 802.1Qaz
	Bus Architecture	PCIe 3x4
	Data Transfer Mode	PCIe Gen 3 x4 based interface
	Power Requirements	3.9W at 100Mbps

Technical Specifications - Networking and Communications

		5.5W at 1Gbps 11.2W at 10Gbps
	Boot ROM Support	Yes
	Network Transfer Mode	Auto negotiation between 1GbE, 2.5GbE, 5GbE and 10GbE
	Management Capabilities	DMI 2.0 Support, Windows Management Instrumentation (WMI) and SNMP, PXE 2.0 through boot ROM, Multi-mode I/O Virtualization, VxLAN, VMDq, VLAN support with VLAN tag insertion
	Kit Contents	Intel® X550 10GBASE-T Dual Port NIC
HP 10GBase-T Flex Port	**Connector**	RJ45 (Single Port)
	Cabling	Twisted Pair Cabling, up to 100m Cat5e (or higher) for 1Gbps Cat6a (or higher) for 10Gbps
	Controller	Marvell AQC113C
	Memory	128KB Tx Buffer, 192KB Rx Buffer on-chip
	Data Rates Supported	10/100/1000 Mbps and 2.5/5/10 Gbps
	Compliance	IEEE 802.3 - 2018, IEEE 802.1AS-2011
	Bus Architecture	PCI Express and SMBus
	Data Transfer Mode	PCIe-based interface for active state operation (S0 state) and SMBus for host and management traffic
	Power Consumption (typical)	5.5W at 1Gbps 11.2W at 10Gbps
	Network Transfer Mode	Full-duplex, Half-duplex
	Network Transfer Rate	10GBASE-T 5GBASE-T 2.5GBASE-T 1000BASE-T 100BASE-TX 10BASE-Te
	Management Capabilities	WOL, PXE, UEFI,
	Kit Contents	HP 10GBase-T Flex Port NIC Module
Intel® I226-T1 1 port 2.5GbE NIC	**Connector**	1xRJ-45
	Cabling	Cat5e (or higher) for 2.5Gbps up to 100m
	Controller	Intel® I226
	Memory	Jumbo Frames up to 9.5KB, 4 Tx and Rx Queues
	Data Rates Supported	10Mbps, 100Mbps, 1Gbps, 2.5Gbps
	Compliance	IEEE 802.3 auto negotiation, 802.3, 802.3u, 802.3ab, 802.3x, 802.3z, IEEE1588 protocol and 802.1AS implementation, 802.3az EEE
	Bus Architecture	PCI Express 2.1 x4
	Data Transfer Mode	PCIe-based interface for active state operation
	Power Requirements	1.4W typical at 2.5Gbps

Technical Specifications - Networking and Communications

	Network Transfer Mode	Multi-speed, full, and half-duplex
	Network Transfer Rate	10BASE-T 100BASE-Tx 1000BASE-T
	Management Capabilities	WOL, PXE 2.1, UEFI, Power Management Protocol Offload (proxying), MAC Power Management, Active State Power Management, ACPI
	Kit Contents	Intel® I226-T1® Adapter
HP 2.5GbE LAN Flex Port	**Connector**	RJ45 (Single Port)
	Cabling	Copper twisted pair, Cat5e up to 100 meters
	Controller	Intel® I225-V
	Memory	4 Tx and 4 Rx Queues, Jumbo Frames up to 9KB and without TSN
	Data Rates Supported	10/100/1000Mbps and 2.5Gbps BASE-T
	Compliance	IEEE 802.3, 802.3u (auto-negotiation), 802.3ab, 1588, 802.1AS-Rev, 802.1Qav, 802.1Qbu, 802.1Qbv, 802.3br, 802.3az
	Bus Architecture	PCIe G2x1
	Data Transfer Mode	PCIe-based interface for active state operation (S0 state) and SMBus for host and management traffic (Sx low power state)
	Power Requirements	2.2 Watts
	Network Transfer Mode	Automatic link configuration for speed duplex and flow control
	Network Transfer Rate	2500BASE-T 1000BASE-T 100BASE-TX (Half-duplex supported) 10BASE-Te (Half-duplex supported)
	Management Capabilities	WOL, PXE, UEFI, Error Correcting Memory in packet buffers, UDP/TCP/IP Checksum Offload, SCTP receive and transmit integrity offload
	Kit Contents	HP 2.5GbE LAN Flex Port Networking Interface Card
HP 1GbE Fiber LC Single Flex Port	**Connector**	LC (Little Connector) Fiber (Single Port)
	Cabling	LC Fiber Cabling
	Controller	AT-29M2
	Data Rates Supported	1GBASE-SX
	Bus Architecture	USB 3.1G1
	Power Requirements	Up to 3.3 Watts
	Network Transfer Mode	1GBASE-SX
	Network Transfer Rate	1GBASE-SX
	Management Capabilities	Wake on LAN, Digital Diagnostic Monitoring
	Kit Contents	HP 1GbE Fiber LC Single Flex Port NIC
HP Flex 1GbE Single Port NIC	**Connector**	RJ45 (Single Port)
	Cabling	1GbE over Category 5e (or better) up to 100m
	Controller	Realtek RTL8153
	Data Rates Supported	10/100/1000 Mbps
	Bus Architecture	USB3.1G1, USB2
	Power Requirements	Requires 3.3V (integrated regulators for core Vdc)
	Network Transfer Mode	Full-duplex; Half-duplex

Technical Specifications - Networking and Communications

	Network Transfer Rate	10BASE-T (half-duplex) 10 Mbps 10BASE-T (full-duplex) 20 Mbps 100BASE-TX (half-duplex) 100 Mbps 100BASE-TX (full-duplex) 200 Mbps 1000BASE-T (full-duplex) 2000 Mbps
	Management Capabilities	Wake on LAN, PXE, UEFI
	Kit Contents	HP 1GbE Single Flex Port
Intel® Ethernet I350-T4V2 4-Port 1Gb NIC (After Market Option Only)	**Connector**	4x RJ-45 (Quad Port)
	Cabling	Cat3 (or higher) for 10Mbps Cat5 (or higher) for 100Mbps Cat5e (or higher) for 1Gbps up to 100m
	Controller	Intel® I350
	Memory	Jumbo Frames up to 9.5KB, 8 Tx/Rx Queue pairs per port, Main Internal memory is Error Code Correcting
	Data Rates Supported	10Mbps, 100Mbps, 1Gbps
	Compliance	IEEE 802.3 auto negotiation, 802.3, 802.3u, 802.3ab, 802.3x, 802.3z, IEEE1588 protocol and 802.1AS implementation, 802.3az EEE
	Bus Architecture	PCI Express 2.1 x4
	Data Transfer Mode	PCIe-based interface for active state operation
	Power Requirements	5W
	Network Transfer Mode	Multi-speed, full, and half-duplex
	Network Transfer Rate	10BASE-T 100BASE-Tx 1000BASE-T
	Management Capabilities	WOL, PXE 2.1, UEFI, Power Management Protocol Offload (proxying), MAC Power Management, Active State Power Management, VLAN, ACPI
	Kit Contents	Intel® Ethernet I350- T4V2 4-Port 1Gb NIC, installation instructions
Allies Telesis AT-2914SX/LC 1GB LC Fiber NIC	**Connector**	LC Fiber (Single Port)
	Cabling	50/125 µm (core/cladding) multimode fiber optic cable up to 500m 62.5/125 µm (core/cladding) multimode fiber optic cable up to 220m
	Memory	Jumbo Frames up to 9.6KB
	Data Rates Supported	1000SX (1GbE Fiber at 850nm Wavelength)
	Compliance	IEEE 802.1p (Quality of Service), IEEE 802.1Q (VLANs), IEEE 802.2 (LLC), IEEE 802.3ac (MAC), IEEE 802.3x (Flow control auto-negotiation), IEEE 802.3z (1000 Base-X), IEEE 802.3ad (Link aggregation) RoHS, UL, FCC/EN55022 Class A, TUV, EN55024, CE, C-TICK, VCCI
	Bus Architecture	PCIe x1
	Data Transfer Mode	PCIe-based interface
	Power Requirements	1.5 Watts (typical)
	Network Transfer Rate	1000SX only (1GbE Fiber at 850nm Wavelength)
	Management Capabilities	UEFI, Smart Load Balancing and failover, Link aggregation (IEEE802.3ad), Generic trunking (FEC/GEC) / IEEE 802.3ad-draft static, VLAN Support
	Kit Contents	Allied Telesis AT-2914SX/LC 1GB LC Fiber NIC with low-profile bracket attached and standard height bracket included

Technical Specifications - Networking and Communications

Allied Telesis AT-2911T/2-901 Dual Port 1GbE NIC	**Connector**	2 x RJ-45 (Dual Port)
	Cabling	Cat3 (or higher) for 10Mbps Cat5 (or higher) for 100Mbps Cat5e (or higher) for 1Gbps up to 100m
	Memory	17 Rx and 16 Tx queues
	Data Rates Supported	10/100/1000 Mbps
	Compliance	IEEE 802.1p (Quality of Service), IEEE 802.1Q (VLANs), IEEE 802.2 (LLC), IEEE 802.3ac (MAC), IEEE 802.3x (Flow control auto-negotiation), IEEE 802.3z (1000 Base-X), IEEE 802.3ad (Link aggregation), IEEE 802.3ab (10/100/1000T) RoHS, UL, FCC/EN55022 Class A, TUV, EN55024, CE, C-TICK, VCCI
	Bus Architecture	PCIe 2x1
	Data Transfer Mode	PCIe-based interface
	Power Requirements	2.4 Watts (typical)
	Management Capabilities	VLAN support, Link aggregation LACP, Link aggregation smart switch, Failover, Smart Load Balancing (SLB), iSCSI boot support, Windows Management Instrumentation (WMI), PXE 2.1, SNMP
	Kit Contents	Allied Telesis AT-2911T/2-901 Dual Port 1GbE NIC with low-profile bracket attached and standard bracket included
MediaTek RZ616 Wi-Fi 6 + Bluetooth® 5.3 wireless card Flex Port NIC with Internal Antenna	**Connector**	Wireless
	Cabling	N/A
	Controller	MediaTek RZ616
	Data Rates Supported	Wi-Fi 6 (2.4GHz/5GHz) (20MHz, 40MHz, 80MHz, 160MHz)
	Compliance	IEEE 802.11 a/b/g/n/ac/ax IEEE 802.11 d/e/h/i/j/k/mc/r/v/w
	Bus Architecture	PCIe G2.1 for WLAN, USB2.0 for BT
	Capabilities	Wi-Fi: MU-MIMO TX/RX, STBC, LDPC Greenfield, mixed mode, legacy mode Security support for WFA WPA/WPA2/WPA3 personal, WPS2.0 QoS support of WFA WMM, WMM PS BT: BT 2.1, 3.0, 5.3 Up to 7 BT links and 16BLE links SCO and eSCO link with retransmission Packet Loss Concealment (PLC) for voice quality AES128 and ECC256
	Kit Contents	MediaTek RZ616 Wi-Fi 6 + Bluetooth® 5.3 Flex Port NIC Installation Instructions
	* Wireless access point and Internet service required and sold separately. Availability of public wireless access points limited. Wi-Fi 6 (802.11ax) is backwards compatible with prior 802.11 specs.	
Intel® AX210 Wi-Fi 6E non-vPro + Bluetooth® 5.2 wireless card with External Antenna WLAN	**Connector**	Wireless
	Cabling	N/A
	Controller	Intel® AX210
	Data Rates Supported	Wi-Fi 6E (2.4GHz/5GHz/6GHz)

Technical Specifications - Networking and Communications

Compliance	Wi-Fi Alliance* Wi-Fi Alliance CERTIFIED 6, WiFi CERTIFIED a/b/g/n/ac, WMM, WMM-Power Save, WPA2, WPA3, Wi-Fi Direct, and Wi-Fi Agile Multiband IEEE WLAN Standard 802.11-2016, 802.11a, b, d, e, g, h, I, k, n, r, u, v, w, ac, and ax, Bluetooth® 5.2
Bus Architecture	PCIe G3x1 for WLAN, USB3.1G1 for BT
Management Capabilities	Authentication Protocols: 802.1X EAP-TLS, EAP-TTLS/MSCHAPv2, PEAPv0 - MSCHAPv2 (EAP-SIM, EAP-AKA, EAP-AKA') Encryption: 128-bit AES-CCMP, 256-bit AES-GCMP UEFI
Kit Contents	Intel® AX210 Wi-Fi 6 + Bluetooth® 5.2 PCIe NIC External Dipole Antenna Installation Instructions

*Wi-Fi 6E requires a Wi-Fi 6E router, sold separately to function in the 6GHz band. Availability of public wireless access points limited. Wi-Fi 6E is backwards compatible with prior 802.11 specs. And available in countries where Wi-Fi 6E is supported.

Date of change:	Version History:		Description of change:
December 1, 2023	From v1 to v2	Changed	Other Hardware section
January 17, 2024	From v2 to v3	Changed	Operating Systems section
January 24, 2024	From v3 to v4	Changed	Format
February 1, 2024	From v4 to v5	Changed	STORAGE/HARD DRIVES, Graphics, Social and Environmental Responsibility sections
March 1, 2024	From v5 to v6	Changed	Operating Systems, Graphics sections
April 1, 2024	From v6 to v7	Changed	Graphics, HP Remote System Controller, Certification and Compliance sections
May 1, 2024	From v7 to v8	Changed	Graphics, Social and Environmental Responsibility sections
June 1, 2024	From v8 to v9	Changed	Storage section
July 1, 2024	From v9 to v10	Changed	Graphics section
July 18, 2024	From v10 to v11	Changed	Software section
August 1, 2024	From v11 to v12	Changed	Memory section
August 23, 2024	From v12 to v13	Changed	NETWORKING AND COMMUNICATIONS section
September 2, 2024	From v13 to v14	Changed	NETWORKING AND COMMUNICATIONS section
November 1, 2024	From v14 to v15	Changed	On-Board RAID Support section
November 13, 2024	From v15 to v16	Changed	Page 24
January 8, 2025	From v16 to v17	Changed	Graphics section
February 20, 2025	From v17 to v18	Changed	SATA Hard Drives section
June 9, 2025	From v18 to v19	Changed	Operating Systems, Optical and Removable Storage sections
June 20, 2025	From v19 to v20	Changed	Supported Drive Interfaces section

© 2025 HP Development Company, L.P. The information contained herein is subject to change without notice. The only warranties for HP products and services are set forth in the express warranty statements accompanying such products and services. Nothing herein should be construed as constituting an additional warranty. HP shall not be liable for technical or editorial errors or omissions contained herein. Intel, Intel Core, Xeon, Pentium, Thunderbolt and vPro are trademarks of Intel Corporation in the U.S. and other countries. Microsoft and Windows are either registered trademarks or trademarks of Microsoft Corporation in the United States and/or other countries. AMD is a trademark of Advanced Micro Devices, Inc. ENERGY STAR® is a registered trademark owned by the U.S. government. Linux® is the registered trademark of Linus Torvalds in the U.S. and other countries. NVIDIA, NVS and Quadro and the NVIDIA logo are trademarks and/or registered trademarks of NVIDIA Corporation in the U.S. and other countries. Red Hat® is a registered trademark of Red Hat, Inc. in the United States and other countries. SD is a trademark or registered trademark of SD-3C in the United States, other countries or both. Bluetooth is a trademark of its proprietor used by HP Inc. under license.