Overview

## HP Z8 Fury G5 Workstation




### Front View

1. Integrated Front Handle
2. Power Button
3. HDD Activity LED
4. Headphone/microphone combo
5. Front I/O Premium[2]:
   2 SuperSpeed USB Type-C™ 20 Gbps signaling rate (USB Power Delivery 3.0),
   2 SuperSpeed USB Type-A 5 Gbps signaling rate [left-most Type-A port supports BC1.2 (Battery Charging)]

   Front I/O Entry:
   4 SuperSpeed USB Type-A 5 Gbps signaling rate [left-most Type-A ports supports BC1.2 (Battery Charging)]
6. SD Card Reader
7. 2x External 5.25" bay[1]
8. 9.5mm Optical Drive Bay

[1]Only 1 external 5.25" drive configurable from factory
[2]Premium Front IO is shown on photography

## Overview




**Internal View**

1. Intel® Xeon® W-3400 processor (Sapphire Rapids)
2. 16 DIMM slots for DDR5 ECC Memory
3. •Slot 1: PCIe x16 Gen5
   •Slot 2: PCIe x4 Gen5
   •Slot 3: PCIe x16 Gen5
   •Slot 4: PCIe x4 Gen4
   •Slot 5: PCIe x16 Gen4
   •Slot 6: PCIe x8 Gen3
   •Slot 7: PCIe x16 Gen4
   •Slot 8: PCIe x4 Gen4
4. 2 PCIe x8 Gen4 configurable with 4x Z Turbo M.2 SSDs
5. 6 SATA ports
6. 3 Internal USB ports. 1 single USB2.0 port, 1 dual USB2.0 port, 1 USB3.0 port (for the SD card reader).
7. 4 Internal 3.5" bays
8. 2 External 5.25" bays and Slimline Optical Drive
9. 2 Internal NVMe connector to front removable M.2 carrier

## Overview

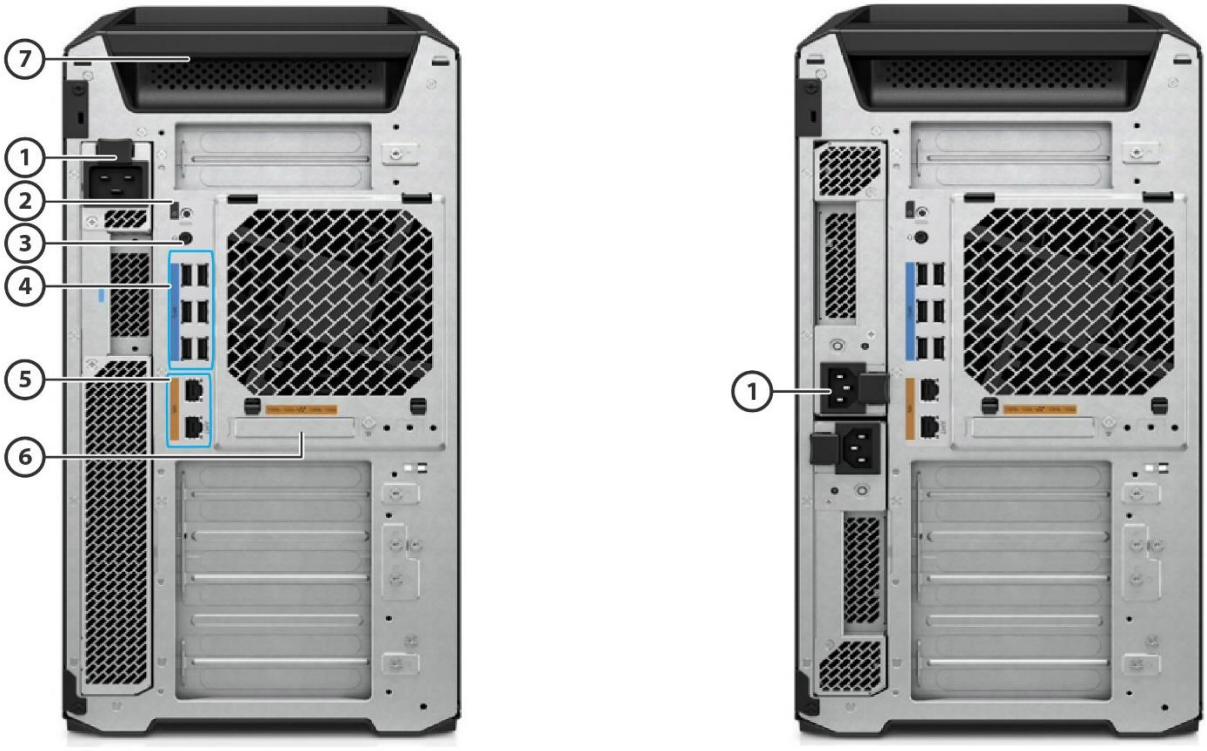


**Rear View**

1. Choice of 90% Efficient Power Supplies:
   - Single 1125W @110V or 1450W @200V
   - Dual 1125W @110V or 1450W @200V (configurable in redundant mode or 2250W aggregate mode)
2. Rear Power Button
3. Audio in/out
4. 6 SuperSpeed USB Type-A 5 Gbps signaling rate
5. 2 RJ-45 integrated LAN ports (1 GbE AMT, 1GbE)
6. 2 10GbE LAN ports (optional)
7. Integrated Rear Handle

**Form Factor** Tower

**Operating Systems**

Preinstalled:

- Windows 11 Pro 64 for Workstations[2]
- Windows 11 Pro for Workstations (preinstalled with Windows 10 Pro for Workstations Downgrade)[,2,3]
- Ubuntu 22.04 LTS[4]
- HP Linux®-ready (minimal OS ready for customer OS installation)[5]

License Only:

- Red Hat® Enterprise Linux® Desktop Workstation (includes paper license with 1 year support; no preinstalled OS)[6]

Supported:

- Windows 11, version 22H2, 21H2[2]
- Windows 10, version 22H2, 21H2[2]
- Red Hat® Enterprise Linux® Workstation 8 & 9[6]
- SUSE Linux® Enterprise Desktop 15[6]

- Ubuntu 20.04 & 22.04 LTS[5]

Web-supported only:

- Windows 11 Enterprise[2,1]
- Windows 10 Enterprise[2,1]

[1] Windows Enterprise sold separately and requires that customer have an enterprise license from Microsoft.
[2] Not all features are available in all editions or versions of Windows. Systems may require upgraded and/or separately purchased hardware, drivers, software or BIOS update to take full advantage of Windows functionality. Windows is automatically updated and enabled. High speed internet and Microsoft account required. ISP fees may apply and additional requirements may apply over time for updates. See http://www.windows.com.
[3]This system is preinstalled with Windows 10 Pro software and also comes with a license for Windows 11 Pro software and provision for recovery software. You may only use one version of the Windows software at a time. Switching between versions will require you to uninstall one version and install the other version. You must back up all data (files, photos, etc.) before uninstalling and installing operating systems to avoid loss of your data.
[4] Not all features are available in all editions or versions of Ubuntu. Systems may require upgraded and/or separately purchased hardware, drivers, software or BIOS to take full advantage of Ubuntu functionality. Ubuntu may be automatically updated. ISP fees may apply and additional requirements may apply over time for updates.
[5]A certified preloaded version of Ubuntu® 20.04 LTS is available from HP for this platform. Not all features are available in all editions or versions of Ubuntu. Systems may require upgraded and/or separately purchased hardware, drivers, software or BIOS to take full advantage of Ubuntu functionality. Ubuntu may be automatically updated. ISP fees may apply, and additional requirements may apply over time for upgrades.
[6]For detailed Linux® OS/hardware support information, see:
http://www.hp.com/support/linux_hardware_matrix

**NOTE:** Your product does not support Windows 8 or Windows 7. In accordance with Microsoft's support policy, HP does not support the Windows® 8 or Windows 7 operating system on products configured with Intel® and AMD® 7th generation and forward processors or provide any Windows® 8 or Windows 7 drivers on http://www.support.hp.com. A full list of HP products and the Windows 10 versions tested is available on the HP support website. https://support.hp.com/us-en/document/c05195282

## Overview

### Processors

| Name[1] | Cores | Threads | Frequency (GHz) | | | Cache (MB) | Max Memory Speed (MT/s) | TDP (W) |
|---|---|---|---|---|---|---|---|---|
| | | | Base Frequency | Max Turbo Frequency[2] | ITBM 3.0 Frequency[2] | | 1 DIMM per Channel | |
| Intel® Xeon® W9-3595X | 60 | 120 | 2.0 | 4.8 | 4.8 | 112.5 | 4800 | 385 |
| Intel® Xeon® W9-3575X | 44 | 88 | 2.2 | 4.8 | 4.8 | 97.5 | 4800 | 340 |
| Intel® Xeon® W7-3565X | 32 | 64 | 2.5 | 4.8 | 4.8 | 82.5 | 4800 | 335 |
| Intel® Xeon® W7-3555 | 28 | 56 | 2.7 | 4.8 | 4.8 | 75 | 4800 | 325 |
| Intel® Xeon® W7-3545 | 24 | 48 | 2.7 | 4.8 | 4.8 | 67.5 | 4800 | 310 |
| Intel® Xeon® W5-3535X | 20 | 40 | 2.9 | 4.7 | 4.8 | 52.5 | 4800 | 300 |
| Intel® Xeon® W5-3525 | 16 | 32 | 3.2 | 4.6 | 4.8 | 45 | 4800 | 290 |
| Intel® Xeon® W5-3433 | 16 | 32 | 2. | 4.2 | 4.2 | 45 | 4400 | 220 |
| Intel® Xeon® W5-3425 | 12 | 24 | 3.2 | 4.6 | 4.6 | 30 | 4800 | 270 |
| Intel® Xeon® W5-3423 | 12 | 24 | 2.1 | 4.2 | 4.2 | 30 | 4400 | 220 |

**Notes:**

- Xeon W-3400 processors all feature Intel® vPro® Technology[3]
- Xeon W-3400 processors all support Hyper-Threading
- Xeon W-3400 processors do not offer integrated graphics

[1] Multicore is designed to improve performance of certain software products. Not all customers or software applications will necessarily benefit from use of this technology. Performance and clock frequency will vary depending on application workload and your hardware and software configurations. Intel's numbering, branding and/or naming is not a measurement of higher performance.

[2] Intel Turbo Boost Max (ITBM) performance varies depending on hardware, software and overall system configuration. See http://www.intel.com/technology/turboboost for more information.

[3] Intel vPro® requires Windows 10 Pro 64 bit or higher, a vPro supported processor, vPro enabled chipset, vPro enabled wired LAN and/or Wi-Fi 6E WLAN and TPM 2.0. Some functionality requires additional 3rd party software in order to run. Features of vPro® Essentials and Enterprise vary. See http://intel.com/vpro

## Overview

| | |
|---|---|
| **Color** | Black |
| **Convertibility** | No |
| **Expansion Slots** (see system board section for more details) | •Slot 1: PCIe x16 Gen5<br>•Slot 2: PCIe x4 Gen5<br>•Slot 3: PCIe x16 Gen5<br>•Slot 4: PCIe x4 Gen4<br>•Slot 5: PCIe x16 Gen4<br>•Slot 6: PCIe x8 Gen3<br>•Slot 7: PCIe x16 Gen4<br>•Slot 8: PCIe x4 Gen4 |
| **Expansion Bays** (see storage section for more details) | 4 internal 3.5" bays (All 4 include acoustic dampening rail assemblies)<br>2 external 5.25" bays (175mm depth limit)<br>1 dedicated 9.5mm slim optical disk drive bay |
| **Front I/O** | Front I/O Premium: 2 SuperSpeed USB Type-C™ 20 Gbps signaling rate (USB Power Delivery 3.0), 2 SuperSpeed USB Type-A 5 Gbps signaling rate, 1 headphone/microphone combo, SD card reader (optional). [left-most Type-A ports supports BC1.2 (Battery Charging)]<br><br>Front I/O Entry: 4 SuperSpeed USB Type-A 5 Gbps signaling rate, 1 headphone/microphone combo, SD card reader (optional). [left-most Type-A ports supports BC1.2 (Battery Charging)] |
| **Internal I/O [5]** | 3 Internal USB ports and 6 SATA ports |
| **Rear I/O** | Audio in/out, 6 SuperSpeed USB Type-A 5 Gbps signaling rate, 2 RJ-45 integrated LAN ports (1 GbE AMT, 1 GbE) |
| **Optional I/O** | 2 10GbE LAN ports |
| **On-board RAID Support** | SATA RAID 0 Striped Array<br>SATA RAID 1 Mirrored Array<br>SATA RAID 10 Striped/Mirrored<br>SATA RAID 5 Parity Array |
| **Chassis Dimensions (H x W x D)** | Footprint:<br>H: 17.5" [444.5mm]<br>W: 8.5" [215.9mm]<br>D: 21.7" [551.2mm] (measured to the rear of service panel)<br>Maximum:<br>H: 17.5" [444.5mm]<br>W: 8.5" [215.9mm]<br>D: 21.85" [555.2mm] (measured to the embossment for the rear chassis fans) |
| **Packaged Dimensions** | H: 25" (636mm)<br>W: 13.1" (332mm)<br>D: 28.9" (734mm) |
| **Palletization Profile** | 4 units x 3 layers = 12 units per pallet<br>1200x1000x2034mm (pallet included) |
| **Rack Dimensions** | 5U |
| **Weight** | Exact weights depend upon configuration (System weight only).<br>Minimum: 22kg (48.9lbs.)<br>Typical: 23.1kg (50.9lbs.)<br>Maximum: 36kg (79.4lbs.) |
| **Temperature** | Operating: 5° to 40°C (40° to 104°F)[1]<br>Non-operating: -40° to 60°C (-40° to 140°F)<br>Above 1524 m (5,000 feet) altitude, the maximum operating temperature is reduced by 1° C (1.8° F) for every 305 m (1,000 feet) increase in elevation<br>Maximum rate of change: 10 °C/hr<br>No direct sustained sunlight |

## Overview

| | |
|---|---|
| | [1]40°C has been validated for configs up to a 300W CPU, 2x NVIDIA® RTX A4000 graphics cards, 8x64GB RAM, 4x 2TB M.2 storage, 2x 2TB HDD storage, and 1125W full-height PSU |
| **Humidity** | Operating: Operating: 8% to 85% RH, non-condensing, 35° C maximum wet bulb<br>Non-operating: 8% to 90%, non-condensing, 35° C maximum wet bulb |
| **Maximum Altitude (non-pressurized)[6]** | Operating (with Rotational Hard Drives): 3,048 m (10,000 feet)<br>Operating (with only Solid-State Drives): 5,000 m (16,404 feet)<br><br>Non-operating: 9,144m (30,000ft)<br>**NOTE:** Above 1524 m (5,000 feet) altitude, maximum operating temperature is reduced by 1° C (1.8° F) per 305 m (1,000 feet) elevation increase |
| **Power Supply** | Choice of 80 Plus Gold (90% efficiency at 50% load)Power Supplies:<br>•Single 1125W @110V or 1450W @200V (Delta Efficiency Report)<br>•Dual 1125W @110V or 1450W @200V (Delta Efficiency Report) (configurable in redundant mode or 2250W aggregate mode)<br><br>**NOTE:** not all configurations are supported on all power supplies. Configuration support depends on total system power budget and having sufficient number or type of PCIe supplemental power connectors. Confirm power supply and configuration support using configurator on hp.com.<br>• 1125W supports up to 600W of auxiliary graphics power (dependent on system configuration)<br>• 1450W supports up to 900W of auxiliary graphics power (dependent on system configuration)<br>• 2250W supports up to 1200W of auxiliary graphics power (dependent on system configuration)<br><br>**NOTE:** updating graphics after purchase may require additional power distribution cables and/or auxiliary graphics adapters to support the new graphics configuration. |
| **Workstation ISV Certifications** | See the latest list of certifications at<br>http://www.hp.com/united-states/campaigns/workstations/partnerships.html |
| **Chipset** | Intel® W790 chipset |
| **Memory** | 16 DIMM slots, supporting25 HP Wolf Pro Security Edition is available preloaded on select SKUs, and, depending on the HP product purchased, includes a license with a term length communicated to you at purchase and in your order confirmation email. The HP Wolf Pro Security Edition software is licensed under the license terms of the HP Wolf Security Software - End-User license Agreement (EULA) that can be found at: https://support.hp.com/us-en/document/ish_3875769-3873014-16 as that EULA is modified by the following: 7. Term. Unless otherwise terminated earlier pursuant to the terms contained in this EULA, the license for the HP Wolf Pro Security Edition is effective upon 4 months after the date the HP Product was shipped by HP and will continue for the term communicated to you at purchase and in your order confirmation email (“Initial Term”). At the end of the Initial Term you may either (a) purchase a renewal license for the HP Wolf Pro Security Edition from HP.com, HP Sales or an HP Channel Partner, or (b) continue using the standard versions of HP Sure Click and HP Sure Sense at no additional cost with no future software updates or HP Support. Notwithstanding the foregoing, the license shall expire no later than one year after the fixed term of the subject license ends. up to 2TB RDIMMs, DDR5 4800 MT/s speed depending on the system configuration |

## Supported Components

| Processors | Factory Configured | Option Kit | Option Kit Part Number | Support Notes |
|---|---|---|---|---|
| **Intel® Xeon® W-3400 processors** | | | | |
| Intel® Xeon® W9-3595X | Y | N | | |
| Intel® Xeon® W9-3575X | Y | N | | |
| Intel® Xeon® W7-3565X | Y | N | | |
| Intel® Xeon® W7-3555 | Y | N | | |
| Intel® Xeon® W7-3545 | Y | N | | |
| Intel® Xeon® W5-3535X | Y | N | | |
| Intel® Xeon® W5-3525 | Y | N | | |
| Intel® Xeon® W5-3433 | Y | N | | |
| Intel® Xeon® W5-3425 | Y | N | | |
| Intel® Xeon® W5-3423 | Y | N | | |

| SATA Hard Drives | Factory Configured | Option Kit | Option Kit Part Number |
|---|---|---|---|
| 1TB 7200RPM SATA 3.5in Enterprise HDD | Y | Y | W0R10AA |
| 2TB 7200RPM SATA 3.5in Enterprise HDD | Y | Y | 2Z274AA |
| 4TB 7200RPM SATA 3.5in Enterprise HDD | Y | Y | K4T76AA/AT |
| 8TB 7200RPM SATA 3.5in Enterprise HDD | Y | Y | 2Z273AA |
| 12TB 7200RPM SATA-6G 3.5in Enterprise HDD | Y | Y | 5S461AA |
| 1TB 7200RPM SATA 3.5" Enterprise HDD (not-made-in-China) | Y | N | |
| 2TB 7200RPM SATA 3.5in Enterprise HDD (not-made-in-China) | Y | N | |

**NOTE:** Starting November 1, 2023, HP PCs with Windows require Windows to be installed on SSD. HDD can only be configured as additional data drives and not as the boot drive.

| PCIe Solid State Drives | Factory Configured | Option Kit | Option Kit Part Number |
|---|---|---|---|
| Z Turbo 512GB 2280 PCIe-4x4 TLC SSD[4] | Y | Y | 38T80AA |
| Z Turbo 512GB 2280 PCIe-4x4 SED OPAL2 TLC M.2 SSD[4] | Y | Y | 38T81AA |
| Z Turbo 512GB 2280 PCIe-4x4 TLC SSD (not-made-in-China) | Y | N | |
| Z Turbo 512GB 2280 PCIe-4x4 TLC Z8 Kit SSD[5] | N | Y | 360H7AA |
| Z Turbo 512GB 2280 PCIe-4x4 SED OPAL2 TLC M.2 Z8 Kit SSD[5] | N | Y | 360H2AA |
| Z Turbo 1TB 2280 PCIe-4x4 SED OPAL2 TLC M.2 SSD[4] | Y | Y | 38T76AA |
| Z Turbo 1TB 2280 PCIe-4x4 TLC SSD[4] | Y | Y | 38T77AA |
| Z Turbo 1TB 2280 PCIe-4x4 TLC SSD (not-made-in-China) | Y | N | |
| Z Turbo 1TB 2280 PCIe-4x4 TLC Z8 Kit SSD[5] | N | Y | 360H5AA |
| HP 1TB 2280 PCIe-4x4 NVMe M.2 India Solid State Drive[4] | Y | Y | 9A1X3AA |
| Z Turbo 1TB 2280 PCIe-4x4 SED OPAL2 TLC M.2 Z8 Kit SSD[5] | N | Y | 360H4AA |
| Z Turbo 2TB 2280 PCIe-4x4 SED OPAL2 TLC M.2 SSD[4] | Y | Y | 38T79AA |
| Z Turbo 2TB 2280 PCIe-4x4 TLC SSD[4] | Y | Y | 38T75AA |

## Supported Components

| | | | |
|---|---|---|---|
| Z Turbo 2TB 2280 PCIe-4x4 SED OPAL2 TLC M.2 Z8 Kit SSD[5] | N | Y | 360H1AA |
| HP 2TB 2280 PCIe-4x4 NVMe M.2 India Solid State Drive[4] | Y | Y | 9A1X2AA |
| Z Turbo 4TB 2280 PCIe-4x4 TLC M.2 SSD[4] | Y | Y | 5S496AA/AT |
| Z Turbo 4TB 2280 PCIe-4x4 SED OPAL2 TLC M.2 SSD[4] | Y | Y | 5S497AA/AT |
| Z Turbo 4TB 2280 PCIe-4x4 SED OPAL2 TLC M.2 Z8 Kit SSD[5] | Y | Y | 5S4A0AA |
| **HP Z Turbo Drive Dual Pro** | | | |
| HP Z Turbo Drive Dual Pro PCIe-4x4 NVMe Carrier[1] | Y | Y | 56Q86AA |
| HP Z Turbo Drive Dual Pro 512GB TLC SSD | Y | N | |
| HP Z Turbo Drive Dual Pro 1TB TLC SSD | Y | N | |
| HP Z Turbo Drive Dual Pro 2TB TLC SSD | Y | N | |
| HP Z Turbo Drive Dual Pro 4TB TLC SSD | Y | N | |
| **HP Z Turbo Drive Quad Pro** | | | |
| HP Z Turbo Drive Quad Pro PCIe-4x16 NVMe Carrier[1] | Y | Y | 7H9Z3AA |
| HP Z Turbo Drive Quad Pro 512GB TLC SSD | Y | N | |
| HP Z Turbo Drive Quad Pro 1TB TLC SSD | Y | N | |
| HP Z Turbo Drive Quad Pro 2TB TLC SSD | Y | N | |
| HP Z Turbo Drive Quad Pro 4TB TLC SSD | Y | N | |
| **Intel® Virtual RAID on CPU (Intel® VROC) for NVMe** | | | |
| Intel VROC NVMe SSD Premium Ctlr Module[3] | N | Y | 3FJ81AA |
| Intel VROC NVMe SSD Standard Ctlr Module[2] | Y | Y | 3FJ80AA |

**Note 1:** Kit includes carrier and heatsink. Requires separate purchase of Z Turbo PCIe 4x4 M.2 SSD modules.
**Note 2:** Enables RAID 0, 1 & 10
**Note 3:** Enables RAID 0, 1 & 10 plus RAID 5 with write hole closure options
**Note 4:** Does not include a heatsink.
**Note 5:** Includes a heatsink.

**NOTE:** Internal M.2 PCIe SSDs are installed using HP Personality Card (up to 2 Personality Cards per system). Each Personality Card can support two M.2 drives.

**NOTE:** For storage drives, GB = 1 billion bytes. TB = 1 trillion bytes. Actual formatted capacity is less. Up to 36GB of system disk (for Windows) is reserved for system recovery software.

| Graphics | | Factory Configured | Option Kit | Option Kit Part Number | Supported # of cards |
|---|---|---|---|---|---|
| **Graphics Cable Adapters** | HP DisplayPort to HDMI Adapter | Y | Y | 2JA63AA | |
| | HP DisplayPort to DVI Adapter (Bulk 90) | N | Y | FH973A6 | |
| | HP DisplayPort to VGA Adapter | N | Y | AS615AA/AT | |
| | HP DisplayPort to VGA Adapter | N | Y | F7W97AA | |
| | HP miniDP-to-DP Adapter Cable (single) | Y | Y | 2MY05AA | |
| | HP miniDP-to-DP Adapter Cable (2-pack) | Y | N | | |
| | HP miniDP-to-DP Adapter Cable (4-pack) | Y | N | | |
| | HP miniDP-to-DP Adapter Cable (8-pack) | Y | N | | |
| | HP miniDP-to-DP Adapter Cable (Bulk 12) | N | Y | 2KW87A6 | |
| | HP Graphics Power Cable CPU-8p to CPU-8p[2] | N | Y | 6J6H7AA | |

## Supported Components

| | | | | | |
|---|---|---|---|---|---|
| | HP Graphics Power Cable CPU-8p to x2 PCIe 8p(6+2)[2] | N | Y | 6J6H8AA | |
| | NVIDIA 3D Stereo Bracket | N | Y | K0A25AA | |
| **Ultra High-End Graphics** | NVIDIA® A800 40 GB Graphics[3] | Y | Y | 8D6C0AA | 3 |
| | NVIDIA® RTX 6000 Ada 48GB | Y | Y | 79C23AA/AT | 4 |
| | NVIDIA® RTX 6000 Ada 48 GB 4DP w/NVIDIA Omniverse Enterprise Graphics | N | Y | 9X3E1AA | 4 |
| | NVIDIA® RTX A6000 48GB | Y | Y | 2S6U3AA/AT | 4 |
| | AMD Radeon Pro W6800 32 GB | Y | Y | 340K7AA | 2 |
| | NVIDIA RTX 5000 Ada 32 GB 4DP Graphics | Y | Y | 8D6B6AA | 4 |
| | NVIDIA® RTX A5000 24GB | Y | Y | 20X23AA/AT | 4 |
| | NVIDIA® Quadro® Sync II | N | Y | 1WT20AA | |
| | AMD® Radeon™ Pro W7900 48GB | Y | Y | 8F699AA | 1 |
| **High-End Graphics** | NVIDIA® RTX 4500 Ada 24GB | Y | Y | 8D6C1AA | 4 |
| | NVIDIA® RTX A4500 20GB | Y | Y | 5S458AA/AT | 4 |
| | NVIDIA® RTX 4000 Ada 20GB | Y | Y | 8D6B7AA | 4 |
| | NVIDIA® RTX A4000 16GB | Y | Y | 20X24AA/AT | 4 |
| | NVIDIA® Long-Life RTX A4000E 16GB | Y | Y | 6H7J7AA | 4 |
| **Midrange Graphics** | NVIDIA® RTX 2000 Ada 16 GB | Y | Y | 8D6B8AA | 2 |
| | NVIDIA® RTX A2000 12GB | Y | Y | 5Z7D9AA/AT | 4 |
| | NVIDIA® Long-Life RTX A2000E 12GB | Y | N | | 4 |
| | NVIDIA® T1000 8GB | Y | Y | 5Z7D8AA/AT | 6 |
| | NVIDIA® Long-Life T1000E 8GB | Y | Y | 6V9V4AA/AT | 6 |
| | AMD® Radeon™ Pro W7600 8GB | Y | Y | 8D6B9AA | 3 |
| | AMD® Radeon™ Pro W7500 8GB | Y | Y | 8D6C2AA | 3 |
| | AMD® Radeon™ Pro W6600 8GB | Y | Y | 340K5AA | 3 |
| **Entry Graphics** | NVIDIA® T400 4GB | Y | Y | 5Z7E0AA/AT | 4 |
| | NVIDIA® T400E 4 GB 4mDP Graphics | Y | Y | A4HP3AA | 4 |
| | AMD® Radeon™ RX 6400 4GB | Y | Y | 6Q3U4AA/AT | 1 |
| | NVIDIA T1000 4GB | Y | Y | 20X22AA/AT | 4 |
| | Intel Arc Pro A40 6GB | Y | Y | 6E3Y8AA | 1 |

**Note 2:** Required for select graphics configurations.
**Note 3:** The NVIDIA® A800 is meant for GPU compute and does not have video outputs. A graphics card must be configured in addition with the A800.

| **Memory** | | **Factory Configured** | **Option Kit** | **Option Kit Part Number** | **Support Notes** |
|---|---|---|---|---|---|
| | 16GB (1x16GB) DDR5 4800 DIMM ECC REG Memory (not-made-in-China) | Y | N | | |
| | 32GB (2x16GB) DDR5 4800 DIMM ECC REG Memory | Y | N | | |
| | 32GB (2x16GB) DDR5 4800 DIMM ECC REG Memory (not-made-in-China) | Y | N | | |
| | 64GB (4x16GB) DDR5 4800 DIMM ECC REG Memory | Y | N | | |
| | 64GB (4x16GB) DDR5 4800 DIMM ECC REG Memory (not-made-in-China) | Y | N | | |

## Supported Components

| | | | |
|---|---|---|---|
| 64GB (2x32GB) DDR5 4800 DIMM ECC REG Memory | Y | N | |
| 96GB (6x16GB) DDR5 4800 DIMM ECC REG Memory | Y | N | |
| 128GB (8x16GB) DDR5 4800 DIMM ECC REG Memory | Y | N | |
| 128GB (4x32GB) DDR5 4800 DIMM ECC REG Memory | Y | N | |
| 192GB (6x32GB) DDR5 4800 DIMM ECC REG Memory | Y | N | |
| 256GB (16x16GB) DDR5 4800 DIMM ECC REG Memory | Y | N | |
| 256GB (8x32GB) DDR5 4800 DIMM ECC REG Memory | Y | N | |
| 256GB (4x64GB) DDR5 4800 DIMM ECC REG Memory | Y | N | |
| 256GB (2x128GB) DDR5 4800 DIMM ECC REG Memory | Y | N | |
| 512GB (16x32GB) DDR5 4800 DIMM ECC REG Memory | Y | N | |
| 512GB (8x64GB) DDR5 4800 DIMM ECC REG Memory | Y | N | |
| 512GB (4x128GB) DDR5 4800 DIMM ECC REG Memory | Y | N | |
| 1TB (16x64GB) DDR5 4800 DIMM ECC REG Memory | Y | N | |
| 1TB (8x128GB) DDR5 4800 DIMM ECC REG Memory | Y | N | |
| 2TB (16x128GB) DDR5 4800 DIMM ECC REG Memory | Y | N | |
| **After Market Options** | | | |
| 16GB (1x16GB) DDR5 4800 DIMM ECC REG Memory | Y | Y | 340K1AA |
| 32GB DDR5 (1x32GB) 4800 DIMM ECC REG Memory | N | Y | 340K2AA |
| 32GB (1x32GB) DDR5 4800 DIMM ECC Registered India Memory | Y | Y | 99T40AA |
| 64GB DDR5 (1x64GB) 4800 DIMM ECC REG Memory | N | Y | 340K3AA |
| 128GB DDR5 (1x128GB) 4800 DIMM ECC REG Memory | N | Y | 69D46AA |

**NOTE:** When configuring the system with 2 DIMMS per channel (DPC), max memory speed will decrease from 4800MHz to 4400MHz. The CPUs determine the speed at which the memory is clocked. For example, if a 4800MHz capable CPU is used in the system, the maximum speed the memory will run at is 4800MHz regardless of the specified speed of the memory.

## Supported Components

| Multimedia and Audio Devices | | Factory Configured | Option Kit | Option Kit Part Number |
|---|---|---|---|---|
| | Integrated Realtek ALC3205-CG Audio | Y | N | |

| Optical and Removable Storage | | Factory Configured | Option Kit | Option Kit Part Number |
|---|---|---|---|---|
| | HP CRU QX448 Removable with 185mm Cable (Qty 2) Frame/Carrier[1,4] | Y | N | |
| | HP DX175 Removable HDD Frame/Carrier[2] | Y | Y | 1ZX71AA |
| | HP DX175 Removable HDD Spare Carrier[2] | N | Y | 1ZX72AA |
| | HP CRU Secure High Performance Storage Module with 2TB M.2 SSD[3] | Y | Y | 56Q87AA |
| | HP CRU Secure High Performance Storage Module with 1TB M.2 SSD[3] | Y | Y | 56Q88AA |
| | HP CRU Secure High Performance Storage Module with 512GB M.2 SSD[3] | Y | Y | 56Q89AA |
| | HP 9.5mm Slim DVD-ROM Drive | Y | Y | K3R63AA |
| | HP 9.5mm Slim BDXL Blu-Ray Writer Drive | Y | Y | K3R65AA |
| | HP 9.5mm Slim SuperMulti DVD Writer | Y | Y | K3R64AA |

**Note 1:** Optional separate purchase of HP CRU Secure High Performance Storage (SHIPS) Module(s).
**Note 2:** Only supports 4TB or lower capacity HDDs.
**Note 3:** HP CRU SHIPS Module Kit contains select M.2 SSD for install into a factory configured front removeable storage carrier (HP CRU QX448 Frame/Carrier).
**Note 4:** Front QX448 carrier supports hot-swap capability with front removable drives

| Networking and Communications | | Factory Configured | Option Kit | Option Kit Part Number |
|---|---|---|---|---|
| | HP Dual Port 10GbE NIC G2[2] | Y | Y | 360K6AA |
| | Intel® X550 10GBASE-T Dual Port NIC | Y | Y | 1QL46AA |
| | Intel® I225-T1 Single Port 2.5GbE PCIe NIC | Y | Y | 406L9AA |
| | Intel® Ethernet I350-T4 4-Port 1Gb NIC | N | Y | W8X25AA |
| | Allied Telesis AT-2914SX/LC-901 1GB LC Fiber NIC | Y | Y | 1C7Q2AA |
| | Allied Telesis AT-2911T/2-901 Dual Port 1GbE NIC | Y | Y | 6E3Y9AA/AT |
| | NVIDIA® Mellanox® ConnectX-6 DX Dual Port 10/25GbE SFP28 NIC [1] | Y | Y | 436M8AA |
| | HP 10GbE SFP+ SR/SW LC Fiber Optic Transceiver | Y | Y | 860T8AA |
| | HP 25GbE SFP28 LC Fiber Optic Transceiver | Y | Y | 860T9AA |
| | Intel AX210 Wi-Fi 6E non-vPro + Bluetooth® 5.2 wireless card with External Antenna WLAN | Y | Y | 340L7AA |

**Note1:** Transceivers sold separately. You must have a transceiver installed to connect this card to a network.
**Note 2:** available in Fall 2023

| HP Remote System Controller | | Factory Configured | Option Kit | Option Kit Part Number |
|---|---|---|---|---|
| | HP Remote System Controller | Y | Y | 7K6D7AA |
| | HP Remote System Controller Main Board Adapter | Y | Y | 7K6D8AA |
| | HP Integrated Remote System Controller | Y | Y | 7K6D9AA |

## Supported Components

| | | | | |
|---|---|---|---|---|
| | HP Remote System Controller for Universal KVM | N | Y | 7K7N2AA |

| Racking and Physical Security | | Factory Configured | Option Kit | Option Kit Part Number |
|---|---|---|---|---|
| | HP Z640/Z840/Z8 G4 Rail Rack Kit | N | Y | 2FZ77AA/AT |
| | HP Z8 Rack Rail Upgrade Kit | N | Y | 2FZ76AA/AT |

| Input Devices | | Factory Configured | Option Kit | Option Kit Part Number |
|---|---|---|---|---|
| | HP 320K Wired Keyboard | Y | Y | 9SR37AA/ET/UT |
| | HP 125 Wired Keyboard | Y | Y | 266C9AA/ET/UT |
| | HP 975 USB+BT Dual-Mode Wireless Keyboard | N | Y | 3Z726AA/ET/UT |
| | HP 455 Programmable Wireless Keyboard | N | Y | 4R177AA/ET/UT/A6 |
| | HP Wired Desktop 320MK Mouse and Keyboard | N | Y | 9SR36AA/ET/UT |
| | HP 655 Wireless Keyboard and Mouse Combo | N | Y | 4R009AA/ET/UT/A6 |
| | HP Wired 320M Mouse | Y | Y | 9VA80AA/ET/UT |
| | HP Creator 935 Black Wireless Mouse | N | Y | 1D0K8AA/ET/UT |
| | HP 128 LSR Wired Mouse | Y | Y | 265D9AA/ET/UT |
| | HP 125 Wired Mouse | N | Y | 265A9AA/ET/UT |
| | HP Business Slim Smartcard Keyboard | Y | Y | Z9H48AA/AT |

**NOTE:** Keyboard and Mouse are optional or add on features.

| Other Hardware | | Factory Configured | Option Kit | Option Kit Part Number |
|---|---|---|---|---|
| | HP Dual Thunderbolt4 PCIe x4 Low Profile Card | Y | Y | 340L1AA |
| | HP Type-C SuperSpeed USB 20Gbps Front IO v2 Premium Module | Y | Y | 38T92AA |
| | 1125/1450W Z8 Fury EPA90 Redundant Power Supply | Y | Y | 6E3Z5AA |
| | HP Internal Serial+PS/2 Port | Y | Y | 56Q78AA |
| | HP USB 2.0 Type-A Port Adapter Kit[4] | Y | Y | 79C24AA |
| | HP SD Card Reader Zx G4 | Y | Y | 2VK54AA |
| | HP 2.5in HDD/SSD 2-in-1 Optical Bay Bracket | N | Y | K4T74AA |
| | HP 2.5in to 3.5in HDD Adapter Kit | N | Y | J5T63AA/A6 |
| | HP Optical Bay HDD Mounting Bracket[3] | N | Y | NQ099AA |
| | HP C13 1.83m Power Cord Kit (halogen-free) | Y | N | |
| | HP C13 1.83m Power Cord Kit | Y | Y | 6Z1T9AA |
| | C13-C14 2.0m 15A 100-127V Countries Straight Desktop Power Cord | Y | Y | 8R881AA |
| | C13-C14 2.0m 10A 200-240V Countries Straight Desktop Power Cord | Y | Y | 8R882AA |

**Note 2:** This kit should be used with a power cord from kit 6Z1T9AA. Separate purchase of 6Z1T9AA required.

## Supported Components

**Note 3:** NQ099AA HP Optical Bay HDD Mounting Bracket is required as a separate purchase for HDD option kits installed into an external bay.
**Note 4:** The USB 2.0 Type-A Port Adapter Kit has a single USB 2.0 type A connector.

| Software | Factory Configured | Option Kit | Support Notes |
|---|---|---|---|
| HP Anyware | Y | N | |
| HP Performance Advisor | Y | N | 1 |
| HP PC Hardware Diagnostics UEFI (Windows OS only) | Y | N | 2 |
| HP PC Hardware Diagnostics Windows | Y | N | |
| HP Wolf Security | Y | N | 3 |
| HP Notifications | Y | N | |
| HP Desktop Support Utility | Y | N | |
| HP Documentation | Y | N | |
| myHP | Y | N | |
| HP Easy Clean | Y | N | |
| Kingsoft WPS Office | Y | N | 4 |
| Z by HP Data Science Stack Manager | Y | N | 5, 6 |
| WSL2/Ubuntu Data Science Stack | Y | N | 5 |
| HP Image Assistant | N | N | |
| HP Support Assistant | N | N | |
| HP Smart Health | N | N | |
| Wolf Pro Security | | | 7 |

**Note 1:** Supported with Windows only. Also available as a free download from http://www.hp.com/go/performanceadvisor
**Note 2:** Windows OS only
**Note 3:** Not available in Russia
**Note 4:** Not available in China
**Note 5:** Only available with NVIDIA® graphics
**Note 6:** Only available with Ubuntu
**Note 7:** HP Wolf Pro Security Edition is available preloaded on select SKUs, and, depending on the HP product purchased, includes a license with a term length communicated to you at purchase and in your order confirmation email. The HP Wolf Pro Security Edition software is licensed under the license terms of the HP Wolf Security Software - End-User license Agreement (EULA) that can be found at: https://support.hp.com/us-en/document/ish_3875769-3873014-16 as that EULA is modified by the following: 7. Term. Unless otherwise terminated earlier pursuant to the terms contained in this EULA, the license for the HP Wolf Pro Security Edition is effective upon 4 months after the date the HP Product was shipped by HP and will continue for the term communicated to you at purchase and in your order confirmation email (“Initial Term”). At the end of the Initial Term you may either (a) purchase a renewal license for the HP Wolf Pro Security Edition from HP.com, HP Sales or an HP Channel Partner, or (b) continue using the standard versions of HP Sure Click and HP Sure Sense at no additional cost with no future software updates or HP Support. Notwithstanding the foregoing, the license shall expire no later than one year after the fixed term of the subject license ends.

**Operating Systems** Windows 11 Pro for Workstations[1,2]

## Supported Components

Windows 11 Pro for Workstations (preinstalled with Windows 10 Pro for Workstations Downgrade)[1,2,3]

Ubuntu 22.04 LTS[4]

HP Linux®-ready

[1] Windows Enterprise sold separately and requires that customer have an enterprise license from Microsoft.
[2] Not all features are available in all editions or versions of Windows. Systems may require upgraded and/or separately purchased hardware, drivers, software or BIOS update to take full advantage of Windows functionality. Windows is automatically updated and enabled. High speed internet and Microsoft account required. ISP fees may apply and additional requirements may apply over time for updates. See http://www.windows.com.
[3]This system is preinstalled with Windows 10 Pro software and also comes with a license for Windows 11 Pro software and provision for recovery software. You may only use one version of the Windows software at a time. Switching between versions will require you to uninstall one version and install the other version. You must back up all data (files, photos, etc.) before uninstalling and installing operating systems to avoid loss of your data.
[4] Not all features are available in all editions or versions of Ubuntu. Systems may require upgraded and/or separately purchased hardware, drivers, software or BIOS to take full advantage of Ubuntu functionality. Ubuntu may be automatically updated. ISP fees may apply and additional requirements may apply over time for updates.

**NOTE:** Your product does not support Windows 8 or Windows 7. In accordance with Microsoft's support policy, HP does not support the Windows® 8 or Windows 7 operating system on products configured with Intel® and AMD® 7th generation and forward processors or provide any Windows® 8 or Windows 7 drivers on http://www.support.hp.com. A full list of HP products and the Windows 10 versions tested is available on the HP support website. https://support.hp.com/us-en/document/c05195282

## Supported Components

**HP BIOS**

Key features of the HP BIOS include:

- Deployment and manageability – HP BIOS provides several technologies that help integrate the HP Z8 Fury G5 Workstation into the enterprise, such as PXE, remote recovery, remote configuration, remote control, and BIOS (F10) Setup support for 15 languages.
- Network firmware updates –Update your BIOS via the cloud or standardize on a BIOS version hosted on an Enterprise network.
- Stability – HP BIOS supports the HP stable product roadmap by releasing only critical BIOS changes to the factory and advanced change notification.
- Class 3 UEFI specification version 2.7
- Absolute Persistence agent – For tracking and tracing services, available in select countries, separate software and purchase of a subscription is required.
- Thermal and power management – The HP BIOS provides and enables thermal and power management technologies so component temperatures are managed for high reliability and to assist in operating the HP Workstation computer in any enterprise environment.
- Acoustic performance – Industry leading acoustic emissions across the range of operating conditions.
- Serviceability – HP BIOS provides diagnostic and detailed service information.
- Upgrades and recovery – HP BIOS provides numerous ways to upgrade HP Workstation computers, including BIOS updates from within Windows (HP Firmware Update and Recovery), Capsule update, HP Client Manager, and fail-safe recovery. In addition, the HP BIOS Configuration Utility enables replication of BIOS settings within Windows while the Replicated Setup feature provides the same capability within BIOS (F10) Setup. The BIOS Configuration Utility is available from the HP support website.
- HP BIOS uses PKI signing of the BIOS for trusted BIOS upgrades and recovery. Additional HP BIOS Features:
    - Power-On password – Helps prevent an unauthorized user from powering on the system.
    - Administrator password – Also known as the BIOS Setup password, this helps prevent unauthorized changes to the system configuration. If the administrator password is not known, the BIOS cannot be updated and changes cannot be made to BIOS settings using BIOS Setup or under the OS.
    - S4/S5 Maximum Power Savings setting supports EU Lot6 requirement and allows the computer to power down below 0.5W in S4/S5 (when turned off). When S4/S5 Maximum Power Savings feature is enabled below features are turned off:
        - Power to expansion connectors / slots
        - Most Wake events other than power buttons and WOL (Wake on LAN supported by embedded Lan controller under S4/S5 Maximum Power Saving Enabled)
        - USB charging ports

HP Sure Start Gen7

- BIOS Integrity checking – Sure Start protection ensures that only trusted BIOS code is executed and not rootkits, viruses and malware. Verification is done upon boot up, shutdown and while the system is on.
- Sure Start is set by default to automatically repair the BIOS if corrupted or compromised but is policy driven for better manageability. Start is set by default to automatically repair the BIOS if corrupted or compromised but is policy driven for better manageability.
- Protecting beyond BIOS – Integrity checking and repair is extended to other data that should be protected such as network configuration parameters, platform specific information (i.e. system IDs), secure boot credentials, and other code the system needs to boot.
- Audit enabled – System Audit via Sure Start Event Logs capture data such as incident, repair date and time for troubleshooting and investigating.

## SOFTWARE COMPONENTS AND APPLICATIONS WITH WINDOWS

**BIOS**
HP BIOSphere Gen6[13]
HP DriveLock & Automatic DriveLock
BIOS Update via Network
Master Boot Record Security
Power On Authentication
Absolute Persistence Module[23]
Pre-boot Authentication
HP Wireless Wakeup

**Software**
HP Desktop Support Utility
HP Performance Advisor[1]
HP Privacy Settings
HP Notifications
myHP
HP Services Scan[25]

**Manageability Features**
HP Driver Packs[2]
HP System Software Manager (SSM)
HP BIOS Config Utility (BCU)
HP Client Catalog
HP Manageability Integration Kit Gen6[3]

**Client Security Software**
HP Wolf Security (Including HP Sure Click & HP Sure Sense)[22]
HP Pro Wolf Security (Including Credential Manager)[18]
HP Client Security Manager Gen 7[4]
HP Sure Run[9]
HP Sure Recover[10]
HP Power On Authentication
Microsoft Defender[7]

**Security Management**
HP Security Update Service (SUS)
Secure Erase[16]
TPM 2.0 Embedded Security Chip(Common Criteria EAL4+ Certified)[24]
SATA port disablement (viaBIOS)
Serial, USB enable/disable (viaBIOS)
Power-on password (viaBIOS)
Setup password (viaBIOS)
Support for chassis padlocks and cable lock devices
Integrated hood sensor0
HP Sure Start Gen4[8]

[1] HP Performance Advisor Software - HP Performance Advisor is ready to help you get the most out of your HP Workstation from day one—and every day after. Learn more or download at: http://hp.com/PerformanceAdvisor

[2] HP Driver Packs not preinstalled, however available for download at http://www.hp.com/go/clientmanagement.

[3] HP Manageability Integration Kit can be downloaded from https://ftp.ext.hp.com/pub/caps-softpaq/cmit/HPMIK.html

[4] HP Client Security Manager Gen7 requires Windows and is available on the select HP PCs.

## Supported Components

[7] Microsoft Defender Opt in and internet connection required for updates.

[8] HP Sure Start Gen 7 is available on select HP PCs and workstations. See product specifications for availability.

[9] HP Sure Run Gen5 is available on select Windows 11 based HP Pro, Elite and Workstation PCs with select Intel® or AMD processors

[10] HP Sure Recover Gen4 is available on select HP PCs and requires Windows 10 and an open network connection. You must back up important files, data, photos, videos, etc. before using HP Sure Recover to avoid loss of data. Network based recovery using Wi-Fi is only available on PCs with Intel Wi-Fi Module

[13] HP BIOSphere Gen6 features may vary depending on the platform and configurations.

[16] Secure Erase - For the methods outlined in the National Institute of Standards and Technology Special Publication 800-88 "Clear" sanitation method. HP Secure Erase does not support platforms with Intel® Optane.

[18] HP Wolf Pro Security Edition is available preloaded on select SKUs, and, depending on the HP product purchased, includes a license with a term length communicated to you at purchase and in your order confirmation email. The HP Wolf Pro Security Edition software is licensed under the license terms of the HP Wolf Security Software - End-User license Agreement (EULA) that can be found at: https://support.hp.com/us-en/document/ish_3875769-3873014-16 as that EULA is modified by the following: 7. Term. Unless otherwise terminated earlier pursuant to the terms contained in this EULA, the license for the HP Wolf Pro Security Edition is effective upon 4 months after the date the HP Product was shipped by HP and will continue for the term communicated to you at purchase and in your order confirmation email ("Initial Term"). At the end of the Initial Term you may either (a) purchase a renewal license for the HP Wolf Pro Security Edition from HP.com, HP Sales or an HP Channel Partner, or (b) continue using the standard versions of HP Sure Click and HP Sure Sense at no additional cost with no future software updates or HP Support. Notwithstanding the foregoing, the license shall expire no later than one year after the fixed term of the subject license ends.

[22] HP Wolf Security for Business requires Windows 10 or higher, includes various HP security features and is available on HP Pro, Elite, RPOS and Workstation products. See product details for included security features

[23] Absolute agent is shipped turned off, and will be activated when customers activate a purchased subscription. Subscriptions can be purchased for terms ranging multiple years. Service is limited, check with Absolute for availability outside the U.S. The Absolute Recovery Guarantee is a limited warranty. Certain conditions apply. For full details visit: http://www.absolute.com/company/legal/agreements/computrace-agreement. Data Delete is an optional service provided by Absolute Software. If utilized, the Recovery Guarantee is null and void. In order to use the Data Delete service, customers must first sign a Pre-Authorization Agreement and either obtain a PIN or purchase one or more RSA SecurID tokens from Absolute Software.

[24] Firmware TPM is version 15.21. Hardware TPM is v2.0.

[25] HP Services Scan is provided with Windows Update on select products and will check entitlement on each hardware device to determine if an HP TechPulse-enabled service has been purchased, and will download applicable software automatically. HP TechPulse is a telemetry and analytics platform that provides critical data around devices and applications. For full system requirements or to disable this feature, please visit http://www.hpdaas.com/requirements . Not applicable in China.

## System Board

| | | |
|---|---|---|
| **System Board Form Factor** | Approximately 416.56 x 373.38 mm (16.4 x 14.7 inches) | |
| **Processor Socket** | Single LGA-4677 | |
| **CPU Bus Speed** | DMI Gen4 x 8 lanes | |
| **Chipset** | Intel W790 Alder Lake – WS PCH | |
| **Super I/O Controller** | Nuvoton SIO21 | |
| **Memory Expansion Slots** | 16 DDR5 RDIMM memory slots | |
| **Memory Type Supported** | DDR5, RDIMM (Registered) ECC, RDIMMs and 3DS RDIMMs | |
| **Memory Modes** | Non-Interleaving for single channel. Interleaving when multiple channels are populated | |
| **Memory Speed Supported** | 4800MT/s for 1DPC and 4400MHz for 2DPC; DDR5 | |
| **Memory Protection** | ECC on data | |
| **Maximum Memory** | 2TB | |
| **Memory Configuration** (Supported) | 16GB, 32GB, 64GB RDIMMs and 128GB 3DS RDIMM.<br>RDIMMs and 3DS RDIMMs cannot be mixed in the same system. 64GB RDIMMs cannot be mixed with any other module capacities in the same system. | |
| **NVDIMM Memory** | No | |
| **PCI Express Connectors** | Standard PCIe Slots<br>• 2 PCI Express Gen5 slot x16 mechanical/ x16 electrical (full height, full length)<br>• 1 PCI Express Gen5 slot x4 mechanical/ x4 electrical (full height, full length)<br>• 2 PCI Express Gen4 slot x16 mechanical/ x16 electrical (full height, full length)<br>• 2 PCI Express Gen4 slot x4 mechanical/ x4 electrical (full height, full length)<br>• 1 PCI Express Gen3 slot x8 mechanical/ x8 electrical (full height, full length)<br><br>Personality Slots:<br>• 2 PCI Express Gen4 slot x8 mechanical/ x8 electrical (full height, half length) (supports two x4 M.2 devices per personality slot)<br><br>Other PCIe Connections<br>• 2 Front NVMe Storage (SlimSAS PCIe Gen4 x8) (each PCIe connection supports two x4 M.2 devices for a total system support of four x4 M.2 devices via QX448)<br>• 1 10GbE (PCIe Gen3 x4) | |
| **Supported Drive Interfaces** | **SATA** | Number of SATA ports: 6<br>Intel® SATA controller: primary SATA |
| | **Integrated RAID** | On-board RAID Support<br>Intel® VROC® SATA RAID 0, 1, 5, and 10 supported on Windows 10 and 11, RHEL 8.6 and later, SLE 15 SP4 and later<br>Intel® VROC® NVMe RAID 0, 1, 5, and 10 supported with presence of appropriate VROC upgrade module (after-market kits) on Windows 10 and 11, RHEL 8.6 and later, SLE 15 SP4 and later<br><br>Factory Configured RAID: None |
| | **Integrated Graphics** | No |
| | **Network Controller** | Intel WGI210LAT and WGI219LM.<br>WGI219LM LOM provides Management capabilities: WOL, PXE 2.1, DASH 1.1 and AMT |
| | **External SATA (eSATA)** | No |
| | **Serial** | 1 internal header (requires optional Serial Port Adapter Kit) |
| | **2nd Serial** | No |

## System Technical Specifications

| | | |
|---|---|---|
| | **HD Integrated Audio** | Yes |
| **USB Connector(s)** | **Front** | Front I/O Entry:<br>4 USB 3.1 Gen1 Type-A (left-most port supports Battery Charging 1.2)<br><br>Front I/O Premium:<br>2x USB 3.2 Gen2x2 Type-C™ (Power Delivery 3.0)<br>2x USB 3.1 Gen1 Type-A (left-most port supports Battery Charging 1.2)<br><br>• USB Type-C Ports provide 3 Amps @ 5 Volts<br>• Charging USB Type-A port provides 1.5 Amps @ 5 Volts<br>• Standard USB Type-A Ports provide 900mA @ 5 Volts |
| | **Rear** | 4x USB 3.1 Gen1 Type-A with USB hub and 2x USB 3.2 Gen 1 Type-A without hub. |
| | **Internal** | 1 USB 3.2 Gen1 header, with a single 12-pin shrouded connector. This header supports a USB Media Card reader.<br>1 USB 2.0 single port header<br>1 USB 2.0 dual port header |
| **Flash ROM** | Yes | |
| **CPU Fan Header** | Yes | |
| **Memory Fan Header** | Yes (dual header) | |
| **Chassis Fan Header** | 3 front, one rear and one Aux Fan Header (dual) | |
| **Front PCI Fan Header** | Yes (connects to AUX fan header) | |
| **Front Control Panel/Speaker Header** | Yes | |
| **CMOS Battery Holder - Lithium** | Yes | |
| **Integrated Trusted Platform Module** | Integrated TPM 2.0.<br>Convertible to FIPS 140-2 Certified Mode through firmware v15.21.<br>The TPM module is disabled where restricted by law. | |
| **Power Supply Headers** | Yes | |
| **Power Switch, Power LED & Hard Drive LED Header** | Yes | |
| **Clear Password Jumper** | Yes | |
| **Keyboard/Mouse** | USB and PS/2 (option) | |

[1]Maximum memory capacities assume 64-bit operating systems, such as Genuine Windows® 11 Professional 64 bit, Red Hat Linux 64-bit.
[2]M.2 storage supports compatible devices up to 80mm

## System Technical Specifications

| System Configurations | | | | | | | | |
|---|---|---|---|---|---|---|---|---|
| **Example Configuration #1** | **Processor Info** | Intel® Xeon® w5-3423 2.1GHz 12C 220W | | | | | | |
| | **Memory Info** | 64GB DDR5 (4x16GB) RegRAM | | | | | | |
| | **Graphics Info** | 1x NVIDIA® A2000 | | | | | | |
| | **Disks/Optical/Floppy** | 1x 4TB Internal M.2 SSD + 1x DVDRW SATA | | | | | | |
| | **PSU** | 1x 1125W Full Height | | | | | | |
| | **Other** | N/A | | | | | | |
| **Energy Consumption (Watts)** | | 115 VAC | | 230 VAC | | 100 VAC | | |
| | | LAN Enabled | LAN Disabled | LAN Enabled | LAN Disabled | LAN Enabled | LAN Disabled | |
| | Windows Idle (S0) | 118.527 | 116.568 | 118.754 | 116.635 | 118.445 | 116.415 | |
| | Windows Busy Typ (S0) | 315.78 | | 310.87 | | 313.42 | | |
| | Windows Busy Max (S0) | 346.73 | | 342.51 | | 345.88 | | |
| | Sleep (S3) | 5.196 | 5.193 | 5.201 | 5.195 | 5.192 | 5.187 | |
| | Off (S5) | 1.591 | 1.578 | 1.593 | 1.579 | 1.587 | 1.575 | |
| | Zero Power Mode (EuP) | 0.186 | | 0.252 | | 0.185 | | |

| | | | | | | | |
|---|---|---|---|---|---|---|---|
| **Heat Dissipation (Btu/hr)** | | 115 VAC | | 230 VAC | | 100 VAC | |
| | | LAN Enabled | LAN Disabled | LAN Enabled | LAN Disabled | LAN Enabled | LAN Disabled |
| | Windows Idle (S0) | 404.414 | 397.73 | 405.188 | 397.958 | 404.134 | 397.207 |
| | Windows Busy Typ (S0) | 1077.441 | | 1060.688 | | 1069.389 | |
| | Windows Busy Max (S0) | 1183.043 | | 1168.644 | | 1180.143 | |
| | Sleep (S3) | 17.728 | 17.718 | 17.745 | 17.725 | 17.715 | 17.698 |
| | Off (S5) | 5.428 | 5.384 | 5.453 | 5.387 | 5.414 | 5.373 |
| | Zero Power Mode (EuP) | 0.634 | | 0.859 | | 0.631 | |

| | | | | | | | | |
|---|---|---|---|---|---|---|---|---|
| ***Example Configuration #2*** | **Processor Info** | Intel® Xeon® w5-3435X 3.1GHz 16C 270W | | | | | | |
| | **Memory Info** | 64GB DDR5 (4x16GB) RegRAM | | | | | | |
| | **Graphics Info** | 1x NVIDIA® Quadro A4000 | | | | | | |
| | **Disks/Optical/Floppy** | 1x 1TB Internal SATA HDD + 2x 4TB Internal M.2 SSD + 1x DVDRW SATA | | | | | | |
| | **PSU** | 1x 1125W Full Height | | | | | | |
| | **Other** | N/A | | | | | | |
| **Energy Consumption (Watts)** | | 115 VAC | | 230 VAC | | 100 VAC | | |
| | | LAN Enabled | LAN Disabled | LAN Enabled | LAN Disabled | LAN Enabled | LAN Disabled | |
| | Windows Idle (S0) | 123.644 | 121.267 | 123.845 | 121.486 | 123.241 | 120.891 | |
| | Windows Busy Typ (S0) | 473.23 | | 469.61 | | 472.28 | | |
| | Windows Busy Max (S0) | 495.31 | | 488.24 | | 491.81 | | |
| | Sleep (S3) | 5.24 | 5.177 | 5.325 | 5.197 | 5.185 | 5.114 | |
| | Off (S5) | 1.613 | 1.597 | 1.618 | 1.603 | 1.604 | 1.582 | |
| | Zero Power Mode (EuP) | 0.186 | | 0.259 | | 0.186 | | |

| | | | | | | | | |
|---|---|---|---|---|---|---|---|---|
| | | 115 VAC | | 230 VAC | | 100 VAC | | |

## System Technical Specifications

| | | | | | | | |
|---|---|---|---|---|---|---|---|
| **Heat Dissipation (Btu/hr)** | | LAN Enabled | LAN Disabled | LAN Enabled | LAN Disabled | LAN Enabled | LAN Disabled |
| | Windows Idle (S0) | 421.873 | | 413.763 | | 422.559 | |
| | Windows Busy Typ (S0) | 1614.661 | | 1602.309 | | 1611.4194 | |
| | Windows Busy Max (S0) | 1689.997 | | 1665.875 | | 1678.056 | |
| | Sleep (S3) | 17.879 | 17.664 | 18.168 | 17.732 | 17.691 | 17.448 |
| | Off (S5) | 5.503 | 5.448 | 5.521 | 5.469 | 5.473 | 5.397 |
| | Zero Power Mode (EuP) | 0.634 | | 0.883 | | 0.634 | |
| ***Example Configuration #3*** | **Processor Info** | Intel® Xeon® w7-3455 2.5GHz 24C 270W | | | | | |
| | **Memory Info** | 256GB DDR5 (16x16GB) RegRAM | | | | | |
| | **Graphics Info** | 2x NVIDIA® Quadro A4000 | | | | | |
| | **Disks/Optical/Floppy** | 2x 1TB Internal SATA HDD + 2x 4TB Internal M.2 SSD + 1x DVDRW SATA | | | | | |
| | **PSU** | 2x 1125W Redundant | | | | | |
| | **Other** | N/A | | | | | |

| | | | | | | | |
|---|---|---|---|---|---|---|---|
| **Energy Consumption (Watts)** | | 115 VAC | | 230 VAC | | 100 VAC | |
| | | LAN Enabled | LAN Disabled | LAN Enabled | LAN Disabled | LAN Enabled | LAN Disabled |
| | Windows Idle (S0) | 161.93 | | 158.45 | | 162.05 | |
| | Windows Busy Typ (S0) | 547.49 | | 538.57 | | 543.44 | |
| | Windows Busy Max (S0) | 688.541 | | 670.132 | | 694.74 | |
| | Sleep (S3) | 7.231 | 7.013 | 7.235 | 7.018 | 7.224 | 7.009 |
| | Off (S5) | 2.622 | 2.285 | 2.635 | 2.289 | 2.587 | 2.267 |
| | Zero Power Mode (EuP) | 0.236 | | 0.291 | | 0.235 | |

| | | | | | | | |
|---|---|---|---|---|---|---|---|
| **Heat Dissipation (Btu/hr)** | | 115 VAC | | 230 VAC | | 100 VAC | |
| | | LAN Enabled | LAN Disabled | LAN Enabled | LAN Disabled | LAN Enabled | LAN Disabled |
| | Windows Idle (S0) | 552.506 | | 540.631 | | 552.915 | |
| | Windows Busy Typ (S0) | 1868.035 | | 1837.601 | | 1854.217 | |
| | Windows Busy Max (S0) | 2349.301 | | 2286.491 | | 2370.452 | |
| | Sleep (S3) | 24.672 | 23.928 | 24.685 | 23.945 | 24.648 | 23.914 |
| | Off (S5) | 8.946 | 7.796 | 8.991 | 7.810 | 8.827 | 7.735 |
| | Zero Power Mode (EuP) | 0.805 | | 0.992 | | 0.801 | |

| | | |
|---|---|---|
| ***Example Configuration #4*** | **Processor Info** | Intel Xeon w7-3465X 2.5GHz 28C 300W |
| | **Memory Info** | 512GB DDR5 (16x32GB) RegRAM |
| | **Graphics Info** | 2x NVIDIA® Quadro A6000 |
| | **Disks/Optical/Floppy** | 4x 4TB Internal SATA HDD + 2x 4TB Internal M.2 SSD + 1x DVDRW SATA |
| | **PSU** | 2x 1125W Half Height (Aggregate) |
| | **Other** | N/A |

| | | | | | | | |
|---|---|---|---|---|---|---|---|
| **Energy Consumption (Watts)** | | 115 VAC | | 230 VAC | | 100 VAC | |
| | | LAN Enabled | LAN Disabled | LAN Enabled | LAN Disabled | LAN Enabled | LAN Disabled |
| | Windows Idle (S0) | 185.683 | | 182.315 | | 186.023 | |

## System Technical Specifications

| | | | | | | | |
|---|---|---|---|---|---|---|---|
| | Windows Busy Typ (S0) | 802.106 | | 792.69 | | 800.97 | |
| | Windows Busy Max (S0) | 1093.001 | | 1067.263 | | 1092.547 | |
| | Sleep (S3) | 7.704 | 7.028 | 7.725 | 7.103 | 7.686 | 6.997 |
| | Off (S5) | 2.678 | 2.546 | 2.682 | 2.551 | 2.666 | 2.535 |
| | Zero Power Mode (EuP) | 0.233 | | 0.290 | | 0.231 | |

| **Heat Dissipation (Btu/hr)** | | 115 VAC | | 230 VAC | | 100 VAC | |
|---|---|---|---|---|---|---|---|
| | | LAN Enabled | LAN Disabled | LAN Enabled | LAN Disabled | LAN Enabled | LAN Disabled |
| | Windows Idle (S0) | 633.550 | | 622.058 | | 634.710 | |
| | Windows Busy Typ (S0) | 2736.786 | | 2704.658 | | 2732.909 | |
| | Windows Busy Max (S0) | 3729.319 | | 3641.501 | | 3727.77 | |
| | Sleep (S3) | 26.286 | 23.979 | 26.357 | 24.235 | 26.224 | 23.873 |
| | Off (S5) | 9.137 | 8.686 | 9.151 | 8.704 | 9096 | 8.649 |
| | Zero Power Mode (EuP) | 0.794 | | 0.989 | | 0.788 | |

| ***Example Configuration #5*** | | |
|---|---|---|
| | **Processor Info** | Intel Xeon w9-3495X 1.9GHz 56C 350W |
| | **Memory Info** | 1024GB DDR5 (16x64GB) RegRAM |
| | **Graphics Info** | 4x NVIDIA® Quadro A6000 |
| | **Disks/Optical/Floppy** | 4x 4TB Internal M.2 + 4x 4TB External M.2 + 1x DVDRW SATA |
| | **PSU** | 2x 1125W Half Height (Aggregate) |
| | **Other** | N/A |

| **Energy Consumption (Watts)** | | 115 VAC | | 230 VAC | | 100 VAC | |
|---|---|---|---|---|---|---|---|
| | | LAN Enabled | LAN Disabled | LAN Enabled | LAN Disabled | LAN Enabled | LAN Disabled |
| | Windows Idle (S0) | 398.352 | | 390.385 | | 399.87 | |
| | Windows Busy Typ (S0) | 932.35 | | 918.74 | | 933.412 | |
| | Windows Busy Max (S0) | TBD | | TBD | | TBD | |
| | Sleep (S3) | 18.478 | 18.354 | 18.641 | 18.335 | 18.335 | 18.284 |
| | Off (S5) | 2.261 | 2.156 | 2.312 | 2.174 | 2.268 | 2.155 |
| | Zero Power Mode (EuP) | 0.230 | | 0.291 | | 0.231 | |

| **Heat Dissipation (Btu/hr)** | | 115 VAC | | 230 VAC | | 100 VAC | |
|---|---|---|---|---|---|---|---|
| | | LAN Enabled | LAN Disabled | LAN Enabled | LAN Disabled | LAN Enabled | LAN Disabled |
| | Windows Idle (S0) | 1359.177 | | 1331.993 | | 1364.356 | |
| | Windows Busy Typ (S0) | 3181.178 | | 3134.741 | | 3184.801 | |
| | Windows Busy Max (S0) | TBD | | TBD | | TBD | |
| | Sleep (S3) | 63.047 | 62.624 | 63.603 | 62.559 | 62.559 | 62.385 |
| | Off (S5) | 7.714 | 7.356 | 7.888 | 7.417 | 7.738 | 7.352 |
| | Zero Power Mode (EuP) | 0.788 | | 0.993 | | 0.788 | |

**NOTE:** The numbers in this table are from actual measurements on a single system. There will be some variation from unit to unit.

**NOTE:** The busy power number and associated BTU/hr number for each configuration will be a strong function of the actual application software run on the system. There can be a great deal of variation in this number.

## System Technical Specifications

**NOTE:** The Power Supply Efficiency report may be found at the following links:

https://www.plugloadsolutions.com/80PlusPowerSuppliesDetail.aspx?id=0&type=2

## System Technical Specifications

| | |
|---|---|
| **Operating Voltage Range** | 90-269 VAC |
| **Rated Voltage Range** | 100-240 VAC |
| **Rated Line Frequency** | 50-60 Hz |
| **Operating Line Frequency Range** | 47-66 Hz |
| **ENERGY STAR® certified** (Config Dependent) | Yes |
| **CECP Compliant @ 220V** | Yes |
| **FEMP Standby Power Compliant** | Yes, with Wake-on-LAN disabled: <1W in S5 - Power Off |
| **Built-in Self Test** (BIST) **LED** | Yes |
| **Surge Tolerant Full Ranging Power Supply** (withstands power surges up to 2000V) | Yes |
| **Hood Lock Header** | Yes |
| **ErP Lot 6- Tier 1 Compliance @ 230V** (<1W in S5 - Power Off) | Yes |
| **ErP Lot 6- Tier 2 Compliance @ 230V** (<0.5W in S5 - Power Off) | Yes |

| **Declared Noise Emissions** (Entry-level, Mid-level, and High-end configurations; tested on floor) | | | |
|---|---|---|---|
| **System Configuration (Entry level)** | **Processor Info** | Intel Sapphire Rapids 12C 220W | |
| | **Memory Info** | 4 x 16GB DDR5-4800 RDIMM | |
| | **Graphics Info** | 1 x NVIDIA RTX A2000 | |
| | **Disks/Optical** | 2 x 512GB SSD / Blu-ray DVD+/-RW | |
| | **Power Supply** | 1125W Full Height | |
| **Declared Noise Emissions** | | **Sound Power** (LWAd, bels) | **Deskside Sound Pressure** (LpAm, decibels) |
| | **Idle** | 3.3 | 15 |
| | **Hard drive Operating (Drive Random Seek)** | 3.3 | 15 |
| | **Active mode** | 3.3 | 16 |
| **System Configuration (Mid-level)** | **Processor Info** | Intel Sapphire Rapids 36C 300W | |
| | **Memory Info** | 4 x 16GB DDR5-4800 RDIMM | |
| | **Graphics Info** | 1 x NVIDIA RTX A4000 | |
| | **Disks/Optical** | 2 x 512GB SSD + 1TB HDD / Blu-ray DVD+/-RW | |
| | **Power Supply** | 1125W Full Height | |
| **Declared Noise Emissions** | | **Sound Power** (LWAd, bels) | **Deskside Sound Pressure** (LpAm, decibels) |
| | **Idle** | 3.4 | 16 |
| | **Hard drive Operating (Drive Random Seek)** | 4.0 | 20 |

## System Technical Specifications

| | | | |
|---|---|---|---|
| | **Active mode** | 3.7 | 18 |
| **System Configuration (High-end)** | **Processor Info** | Intel Sapphire Rapids 56C 350W | |
| | **Memory Info** | 16 x 64GB DDR5-4800 RDIMM | |
| | **Graphics Info** | 4 x NVIDIA RTX A6000 | |
| | **Disks/Optical** | 4 x 4TB SSD + 4 x 8TB HDD / Blu-ray DVD+/-RW | |
| | **Power Supply** | 2 x 1125W Half Height | |
| **Declared Noise Emissions** | | **Sound Power** (LWAd, bels) | **Deskside Sound Pressure** (LpAm, decibels) |
| | **Idle** | 4.3 | 28 |
| | **Hard drive Operating (Drive Random Seek)** | 4.5 | 29 |
| | **Active mode** | 4.4 | 28 |
| | | | |

| | | |
|---|---|---|
| **Environmental Requirements** | **Temperature** | Operating: 5° to 40°C (40° to 104°F)[1]<br>Non-operating: -40° to 60°C (-40° to 140°F)<br><br>[1]40°C has been validated for configs up to a 300W CPU, 2x NVIDIA® RTX A4000 graphics cards, 8x64GB RAM, 4x 2TB M.2 storage, 2x 2TB HDD storage, and 1125W full-height PSU |
| | **Humidity** | Operating: 8% to 85% RH, non-condensing<br>Non-operating: 8% to 90% RH, non-condensing |
| | **Maximum Altitude** | Operating (with Rotational Hard Drives): 3,048 m (10,000 feet)<br>Operating (with only Solid-State Drives): 5,000 m (16,404 feet)<br><br>Non-operating: 9,144 m (30,000 feet) |
| | **Dynamic** | Shock<br>Operating: ½-sine: 40g, 2-3ms (~62 cm/sec)<br>Non-operating: ½-sine: 160 cm/s, 2-3ms (~105g)<br>square: 422 cm/s, 20g<br>**NOTE:** Values represent individual shock events and do not indicate repetitive shock events<br><br>Vibration<br>Operating random: 0.5g (rms), 5-300 Hz, up to 0.0025g²/Hz<br>Non-operating random: 2.0g (rms), 5-500 Hz, up to 0.0150 g²/Hz<br>**NOTE:** Values do not indicate continuous vibration. |
| | **Cooling** | Above 1524 m (5,000 feet) altitude, the maximum operating temperature is reduced by 1° C (1.8° F) for every 305 m (1,000 feet) increase in elevation, up to 3048 m (10,000 feet) |

System Technical Specifications

## Physical Security and Serviceability

| | |
|---|---|
| **Access Panel** | Tool-less<br>Includes system board and memory information |
| **Optical Drive** | Tool-less, 2nd Optical Drive requires a 5.25" bay carrier |
| **Hard Drives** | Tool-less |
| **Expansion Cards** | Tool-less |
| **Processor Socket** | Screw-in processor coolers |
| **Blue User Touch Points** | Yes, on tool-less internal chassis mechanisms |
| **Color-coordinated Cables and Connectors** | Yes |
| **Memory** | Tool-less |
| **System Board** | Tool-less, retained by Front Card Guide and Top Memory Fan Holder |
| **Power and HD LED on Front of Computer** | Yes |
| **Configuration Record SW** | Yes |
| **Over-Temp Warning on Screen** | Yes |
| **Dual Function Front Power Switch** | Yes, causes a fail-safe power off when held for 4 seconds |
| **Padlock Support** | No |
| **Cable Lock Support** | Yes, Kensington Cable Lock (optional): Prevents entire system theft only. 3mm x 7mm slot at rear of system |
| **Universal Chassis Clamp Lock Support** | No |
| **Chassis Interlock Sensor** | Yes<br>Sensor detects when the access panel has been removed. The access panel must be installed for the system to power ON. Removal of the access panel during operation will power OFF the system. |
| **Solenoid Lock and Hood Sensor** | No |
| **Rear Port Control Cover** | No |
| **Serial, USB, Audio, Network, Enable/Disable Port Control** | Yes, enables or disables serial, USB, audio, and network ports |
| **Removable Media Write/Boot Control** | Yes, prevents ability to boot from removable media on supported devices (and can disable writes to media) |
| **Power-On Password** | Yes, prevents an unauthorized person from booting up the workstation |
| **Setup Password** | Yes, prevents an unauthorized person from changing the workstation configuration |
| **3.3V Aux Power LED on System PCA** | No |
| **NIC LEDs (integrated) (Green & Amber)** | Yes |
| **CPUs and Heatsinks** | A torx driver (T30) is needed to remove the processor heatsink. CPU attached to heatsink via tool-less clip |
| **Power Supply Diagnostic LED** | Yes |
| **Front Power Button** | Yes |
| **Front Power LED** | Yes, white (normal), red (fault) |

## System Technical Specifications

| | |
|---|---|
| **Front Hard Drive Activity LED** | Yes, white |
| **Front ODD Activity LED** | Yes, on device |
| **Internal Speaker** | Yes |
| **System/Emergency ROM Flash Recovery** | Recovers corrupted system BIOS. |
| **Cooling Solutions** | Air cooled forced convection |
| **Power Supply Fans** | 2x - Dual Side Inlet Blowers for each power supply |
| **CPU Heatsink Fan** | Base: 92 mm x 92 mm x 25 mm<br>Performance: 108 mm x 108 mm x 25 mm |
| **Chassis Fan** | Rear: 120 mm x 38 mm<br>Front Lower: 120 mm x 25.4 mm<br>Front Middle: 92 mm x 25.4 mm<br>Front Upper: 92 mm x 25 mm |
| **Memory Heatsink Fan** | Memory: 2x 80 mm x 25 mm |
| **HP PC Hardware Diagnostics UEFI** | HP PC Hardware Diagnostics (UEFI) enables hardware level testing outside the operating system on many components. The diagnostics can be invoked by pressing F2 at POST, and is available as a download from HP Support. |
| **Access Panel Key Lock** | Yes, left access panel |
| **ACPI-Ready Hardware** | Advanced Configuration and Power Management Interface (ACPI).<br>• Allows the system to wake from a low power mode.<br>• Controls system power consumption, making it possible to place individual cards and peripherals in a low-power or powered-off state without affecting other elements of the system. |
| **Integrated Chassis Handles** | Yes, front and rear |
| **Power Supply** | Tool-less, rear access direct-connect (blind-mate) |
| **PCI Card Retention** | Yes, rear (all), middle (full-height cards), front (cards with extender) |
| **Flash ROM** | Yes |
| **Diagnostic Power Switch LED on board** | Yes |
| **Clear Password Jumper** | Yes |
| **Clear CMOS Button** | Yes |
| **CMOS Battery Holder** | Yes |
| **DIMM Connectors** | Yes |

## Service, Support, and Warranty

On-site Warranty and Service[1]: One-year, limited warranty and service offering delivers on-site, next business-day[2] service for parts and labor and includes free telephone support[3] 8am - 5pm. Global coverage[2] ensures that any product purchased in one country and transferred to another, non-restricted country will remain fully covered under the original warranty and service offering. 24/7 operation will not void the HP warranty. Storage devices are not covered under warranty for 24/7 operation except for Enterprise class HDDs.

**NOTE 1:** Terms and conditions may vary by country. Certain restrictions and exclusions apply.
**NOTE 2:** On-site service may be provided pursuant to a service contract between HP and an authorized HP third-party provider, and is not available in certain countries. Global service response times are based on commercially reasonable best effort and may vary by country.
**NOTE 3:** Technical telephone support applies only to HP-configured, HP and HP-qualified, third-party hardware and software. Toll-free calling and 24x7 support service may not be available in some countries.
HP Care Pack Services extend service contracts beyond the standard warranties. Service starts from date of hardware purchase. To choose the right level of service for your HP product, use the HP Care Pack Services Lookup Tool at:

http://www.hp.com/go/lookuptool. Service levels and response times for HP Care Packs may vary depending on your geographic location.

**Certification and Compliance**

- USGv6 compliant for Windows OS (USGv6 Compliance Report)
- Completed ISO/IEC 17025 accredited testing designed specifically for the USGv6 Test Program. USGv6 is a test program designated by NIST that provides a proof of compliance to IPv6 (Internet Protocol version 6) specifications outlined in current industry standards for common network products. It is meant as a strategic planning guide for USG (United States Government) IT acquisitions to help ensure the completeness, correctness, interoperability and security of early IPv6 product offerings so as to protect early USG investments in the technology. (source: UNH)

Environmental Sustainability questions concerning:

- Ecolabels (EPEAT, TCO, etc.)
- ENERGY STAR, California Energy Commission (CEC)
- Compliance with Environmental legislation (EU ErP, China CECP, EU RoHS and other countries)
- Supply Chain Social Environmental Responsibility (SER) (conflict minerals; human rights, etc.)
- Product specific environmental features (material content, packaging content, recycled content, etc.)
- China Energy Label (CEL)
-

Please contact sustainability@hp.com

For country specific Regulatory Compliance approval documents or Regulatory and Safety questions concerning:

- Declarations of Conformity (for self-service, go to https://www.hp.com/uk-en/certifications/technical/regulations-certificates.html?jumpid=ex_r135_uk/en/any/corp/hpuk-mu_chev/certificates)
- GS Certificates
- Product Safety Certificates (UL, CB, BIS, etc.)
- EMC Certificates, Declarations of Conformity, or Certificates of Conformity (CE, FCC, ICES, etc.)
- CCC Certificates
- Ergonomics
-

Please contact techregshelp@hp.com

## BIOS

| | |
|---|---|
| **PCIe 5.0 Support** | Full BIOS support for PCI Express through industry standard interfaces. Supported speeds and slot information vary. |
| **ATA/ATAPI** | AT Attachment 6 with Packet Interface (ATA/ATAPI-6), Revision 3b |
| **WMI Support** | WMI is Microsoft's implementation of Web-Based Enterprise Management (WBEM) for Windows. WMI is fully compliant with the Distributed Management Task Force (DMTF) Common Information Model (CIM) and WBEM specifications. |
| **BIOS Power On** | Users can define a specific date and time for the system to power on. |
| **ROM Based Computer Setup Utility (F10)** | Review and customize system configuration settings controlled by the BIOS. |
| **System/Emergency ROM Flash Recovery with Video** | Recovers system BIOS in corrupted Flash ROM. |
| **Replicated Setup** | Saves BIOS settings to USB flash device in human readable file (HpSetup.txt). BiosConfigurationUtility.exe utility can then replicate these settings on machines being deployed without entering Computer Configuration Utility (F10 Setup). |
| **SMBIOS** | System Management BIOS Reference Specification, Version 3.2 |
| **Boot Control** | Disables the ability to boot from removable media on supported devices. |

## System Technical Specifications

| | |
|---|---|
| **Memory Change Alert** | Alerts management console if memory is removed or changed. |
| **Thermal Alert** | Monitors the temperature state within the chassis. Three modes:<br>• NORMAL - normal temperature ranges.<br>• ALERTED - excessive temperatures are detected. Raises a flag so action can be taken to avoid shutdown or provide for a smoother system shutdown.<br>• SHUTDOWN - excessive temperatures are encountered. Automatically shuts down the computer without warning before hardware component damage occurs. |
| **Remote ROM Flash** | Provides secure, fail-safe ROM image management from a central network console. |
| **ACPI (Advanced Configuration and Power Management Interface)** | Allows the system to enter and resume from low power modes (sleep states).<br>Enables an operating system to control system power consumption based on the dynamic workload.<br>Makes it possible to place individual cards and peripherals in a low-power or powered-off state without affecting other elements of the system.<br>Supports ACPI 6.0 for full compatibility with 64-bit operating systems. |
| **Ownership Tag** | A user-defined string stored in non-volatile memory that is displayed in the BIOS splash screen. |
| **Remote Wakeup/Remote Shutdown** | System administrators can power on, restart, and power off a client computer from a remote location. |
| **Instantly Available PC (Suspend to RAM - ACPI sleep state S3)** | Allows for very low power consumption with quick resume time. |
| **Remote System Installation via F12 (PXE 2.1) (Remote Boot from Server)** | Allows a new or existing system to boot over the network and download software, including the operating system. |
| **ROM revision levels** | Reports the system BIOS revision level in Computer Configuration Utility (F10 Setup). Version is available through an industry standard interface (SMBIOS and WMI) so that management SW applications can use and report this information. |
| **System board revision level** | Allows management SW to read revision level of the system board.<br>Revision level is digitally encoded into the HW and cannot be modified. |
| **Start-up Diagnostics (Power-on Self-Test)** | Assesses system health at boot time with selectable levels of testing. |
| **Auto Setup when new hardware installed** | System automatically detects addition of new hardware. |
| **Keyboard-less Operation** | The system can be booted without a keyboard. |
| **Localized ROM Setup** | Common BIOS image supports System Configuration Utility (F10 Setup) menus in 15 languages with local keyboard mappings. |
| **Asset Tag** | The user or MIS to set a unique tag string in non-volatile memory. |
| **Per-slot Control** | Allows I/O slot parameters (option ROM enable/disable, bifurcation, speed) to be configured individually. |
| **Adaptive Cooling** | Control parameters are set according to detected hardware configuration for optimal acoustics. |
| **Pre-boot Diagnostics** | (Pre-video) critical errors are reported via beeps and blinks on the power LED. |
| **UEFI Specification Revision** | 2.7 |
| **ACPI** | Advanced Configuration and Power Management Interface, Version 6.0 |
| **CD Boot** | "El Torito" Bootable CD-ROM Format Specification Version 1.0 |
| **EHCI** | Enhanced Host Controller Interface for Universal Serial Bus, Revision 1.0 |
| **PCI Express** | PCI Express Base Specification, Revision 2.0<br>PCI Express Base Specification, Revision 3.0<br>PCI Express Base Specification, Revision 4.0<br>PCI Express Base Specification, Revision 5.0 |
| **SATA** | Serial ATA Specification, Revision 1.0a<br>Serial ATA 3 Gb/s: Serial ATA Specification, Revision 2.5<br>Serial ATA 6 Gb/s: Serial ATA Specification, Revision 3.0 |
| **SPD** | JEDEC JESD300-5 |

## System Technical Specifications

| | |
|---|---|
| **TPM** | Trusted Computing Group TPM Specification Version 2.0 (Infineon SLB 9672).<br>Common Criteria EAL4+ certified.<br>FIPS 140-2 Certification<br>TCG TPM Certified products list:<br>http://www.trustedcomputinggroup.org/certification/tpm-certified-products/ |
| **UHCI** | Universal Host Controller Interface Design Guide, Revision 1.1 |
| **USB** | Universal Serial Bus Revision 1.1 Specification<br>Universal Serial Bus Revision 2.0 Specification<br>Universal Serial Bus Revision 3.1 Specification<br>Universal Serial Bus Revision 3.2 Specification<br>USB Battery Charging specification, Revision 1.2<br>USB Power Delivery specification Revision 3.0 |
| **SMBIOS** | System Management BIOS Reference Specification, Version 3.2 |

## Social and Environmental Responsibility

**Eco-Label Certifications & Declarations**

This product is low halogen except for configurations that include HP Z Turbo Quad Pro PCIe TLC SSD, CRU QX448 removable storage frames, ConnectX-6 DX Amphenol 10 & 25 Gb Transceivers, Intel VROC M.2 RAID module, Broadcom 5720-2P NIC Card, power cords, cables, and peripherals. Service parts obtained after purchase may not be Low Halogen.

This product has received or is in the process of being certified to the following approvals and may be labeled with one or more of these marks:

- IT ECO declaration
- US ENERGY STAR®
- US Federal Energy Management Program (FEMP)
- EPEAT® Gold with Climate+ registered. See www.epeat.net for registration status and tier levels by country
- TCO Certified
- China Energy Conservation Program (CECP)
- China State Environmental Protection Administration (SEPA)
- Taiwan Green Mark
- Korea Eco-label
- Japan PC Green label*

**Sustainable Impact Specifications**

- Product Carbon Footprint (hp.com)
- Ocean-bound plastic in System fan, CPU fan
- 40% post-consumer recycled plastic
- 10% recycled metal
- Low halogen
- Outside Box and corrugated cushions are 100% sustainably sourced and recyclable
- Recycled Plastic cushions

**System Configuration**

The configuration used for the Energy Consumption and Declared Noise Emissions data for the Notebook model is based on a “Typically Configured Notebook”.

| **Energy Consumption (in accordance with US ENERGY STAR® test method)** | **115VAC, 60Hz** | **230VAC, 50Hz** | **100VAC, 50Hz** |
|---|---|---|---|
| Normal Operation (Sort idle) | 124.28 W | 124.89 W | N/A |
| Normal Operation (Long idle) | 122.88 W | 123.22 W | N/A |
| Sleep | 4.57 W | 4.94 W | N/A |

| | | | |
|---|---|---|---|
| Off | 1.62 W | 1.65 W | N/A |

**NOTE:**
Energy efficiency data listed is for an ENERGY STAR® compliant product if offered within the model family . HP computers marked with the ENERGY STAR® Logo are compliant with the applicable U.S. Environmental Protection Agency (EPA) ENERGY STAR® specifications for computers. If a model family does not offer ENERGY STAR® compliant configurations, then energy efficiency data listed is for a typically configured PC featuring a hard disk drive, a high efficiency power supply, and a Microsoft Windows® operating system.

| **Heat Dissipation*** | **115VAC, 60Hz** | **230VAC, 50Hz** | **100VAC, 50Hz** |
|---|---|---|---|
| Normal Operation (Short idle) | 425 BTU/hr | 427 BTU/hr | N/A |
| Normal Operation (Long idle) | 420 BTU/hr | 421 BTU/hr | N/A |
| Sleep | 16 BTU/hr | 17 BTU/hr | N/A |
| Off | 6 BTU/hr | 6 BTU/hr | N/A |

***NOTE:** Heat dissipation is calculated based on the measured watts, assuming the service level is attained for one hour.

**Longevity and Upgrading**

This product can be upgraded, possibly extending its useful life by several years. Upgradeable features and/or components contained in the

Spare parts are available throughout the warranty period and or for up to “5” years after the end of production.

**Additional Information**

- This product is in compliance with the Restrictions of Hazardous Substances (RoHS) directive - 2011/65/EC.
- This HP product is designed to comply with the Waste Electrical and Electronic Equipment (WEEE) Directive – 2002/96/EC.
- This product is in compliance with California Proposition 65 (State of California; Safe Drinking Water and Toxic Enforcement Act of 1986).
- This product is in compliance with the IEEE 1680 (EPEAT) standard at the Gold level, see www.epeat.net
- Plastics parts weighing over 25 grams used in the product are marked per ISO11469 and ISO1043.
- This product is 91.7% recycle-able when properly disposed of at end of life.

**Packaging Materials**

| | | |
|---|---|---|
| **External:** | PAPER/Corrugated | 2070 g |
| **Internal:** | PLASTIC/EPE (Expanded Polyethylene) | 900 g |
| | PLASTIC/Polyethylene low density | 46 g |

The plastic packaging material contains at least 95.1% recycled content.

The corrugated paper packaging materials contains at least 35.0% recycled content.

**RoHS Compliance**

HP Inc. complies fully with materials regulations. We were among the first companies to extend the restrictions in the European Union (EU) Restriction of Hazardous Substances (RoHS) Directive to our products worldwide through the HP GSE. HP has contributed to the development of related legislation in Europe, as well as China, India, and Vietnam.

We believe the RoHS directive and similar laws play an important role in promoting industry-wide elimination of substances of concern. We have supported the inclusion of additional substances—

including PVC, BFRs, and certain phthalates—in future RoHS legislation that pertains to electrical and electronics products.

We met our voluntary objective to achieve worldwide compliance with the new EU RoHS requirements for virtually all relevant products by July 2013, and we will continue to extend the scope of the commitment to include further restricted substances as regulations continue to evolve.

To obtain a copy of the HP RoHS Compliance Statement, see HP RoHS position statement.

**Material Usage**

This product does not contain any of the following substances in excess of regulatory limits (refer to the HP General Specification for the Environment at http://www.hp.com/hpinfo/globalcitizenship/environment/supplychain/gen_specifications.html):

- Asbestos
- Certain Azo Colorants
- Certain Brominated Flame Retardants – may not be used as flame retardants in plastics
- Cadmium
- Chlorinated Hydrocarbons
- Chlorinated Paraffins
- Bis(2-Ethylhexyl) phthalate (DEHP)
- Benzyl butyl phthalate (BBP)
- Dibutyl phthalate (DBP)
- Diisobutyl phthalate (DIBP)
- Formaldehyde
- Halogenated Diphenyl Methanes
- Lead carbonates and sulfates
- Lead and Lead compounds
- Mercuric Oxide Batteries
- Nickel – finishes must not be used on the external surface designed to be frequently handled or carried by the user.
- Ozone Depleting Substances
- Polybrominated Biphenyls (PBBs)
- Polybrominated Biphenyl Ethers (PBBEs)
- Polybrominated Biphenyl Oxides (PBBOs)
- Polychlorinated Biphenyl (PCB)
- Polychlorinated Terphenyls (PCT)
- Polyvinyl Chloride (PVC) – except for wires and cables, and certain retail packaging has been voluntarily removed from most applications.
- Radioactive Substances
- Tributyl Tin (TBT), Triphenyl Tin (TPT), Tributyl Tin Oxide (TBTO)

**Packaging Usage**

HP follows these guidelines to decrease the environmental impact of product packaging:

- Eliminate the use of heavy metals such as lead, chromium, mercury and cadmium in packaging materials.
- Eliminate the use of ozone-depleting substances (ODS) in packaging materials.
- Design packaging materials for ease of disassembly.
- Maximize the use of post-consumer recycled content materials in packaging materials.
- Use readily recyclable packaging materials such as paper and corrugated materials.
- Reduce size and weight of packages to improve transportation fuel efficiency.
- Plastic packaging materials are marked according to ISO 11469 and DIN 6120 standards.

| | |
|---|---|
| **End-of-life Management and Recycling** | HP offers end-of-life HP product return and recycling programs in many geographic areas. To recycle your product, please go to: http://www.hp.com/go/reuse-recycle or contact your nearest HP sales office. Products returned to HP will be recycled, recovered or disposed of in a responsible manner.<br><br>The EU WEEE directive (2002/95/EC) requires manufacturers to provide treatment information for each product type for use by treatment facilities. This information (product disassembly instructions) is posted on the Hewlett Packard web site at: http://www.hp.com/go/recyclers. These instructions may be used by recyclers and other WEEE treatment facilities as well as HP OEM customers who integrate and re-sell HP equipment. |
| **HP, Inc. Corporate Environmental Information** | For more information about HP's commitment to the environment:<br>Global Citizenship Report<br>http://www.hp.com/hpinfo/globalcitizenship/gcreport/index.html<br>Eco-label certifications<br>http://www8.hp.com/us/en/hp-information/environment/ecolabels.html<br>ISO 14001 certificates:<br>http://h20195.www2.hp.com/V2/GetDocument.aspx?docname=c04755842<br>and<br>http://www.hp.com/hpinfo/globalcitizenship/environment/pdf/cert.pdf |
| **footnotes** | • Percentage of ocean-bound plastic contained in each component varies by product<br>• Recycled plastic content percentage is based on the definition set in the IEEE 1680.1-2018 standard.<br>• External power supplies, WWAN modules, power cords, cables and peripherals excluded.<br>• 100% outer box packaging and corrugated cushions made from sustainably sourced certified and recycled fibers.<br>• Fiber cushions made from 100% recycled wood fiber and organic materials.<br>• Plastic cushions are made from >90% recycled plastic.<br>• Recycled metal is expressed as a percentage of the total weight of the metal according to ISO 14021 definitions for metal parts over 25 grams |

## Manageability

| | |
|---|---|
| **Industry Standard Specifications** | This product meets the following industry standard specifications for manageability functionality:<br>• DASH 1.2 (via Intel® LAN on motherboard) |
| **Intel® Active Management Technology (AMT)** | Intel® Active Management Technology (AMT) 16.10<br><br>An advanced set of remote management features and functionality providing IT administrators the latest and most effective tools to remotely discover, heal, and protect networked client systems regardless of the system's health or power state. AMT 16.10 includes the following advanced management functions:<br><br>• Power Management (on, off, reset, graceful shutdown, sleep and hibernate)<br>  ○ Support in Max Power Savings (Shutdown and Hibernate Modes)<br>• Hardware Inventory (includes BIOS and firmware revisions) |

- Hardware Alerting
- Agent Presence
- System Defense Filters
- Serial Over LAN (SOL)
- USB Redirect (Media Redirection)
- ME Wake-on-LAN (WOL), even with Maximum Power Savings Enabled
- DASH 1.2 compliance
- IPv6 Support
- Fast Call for Help - a client inside or outside the firewall may initiate a call for help via BIOS screen, periodic connections, or alert triggered connection
- Remote Scheduled Maintenance - pre-schedule when the system connects to the IT or service provider console for maintenance.
- Remote Alerts - automatically alert IT or service provider if issues arise
- Access Monitor - Provides oversight into Intel® AMT actions to support security requirements
- PC Alarm Clock
- Microsoft NAP Support
- Host Base set-up and configuration
- Management Engine (ME) firmware roll back
- Local Time Sync to UTC
- Remote Memory Dump Command – Creates memory dump for debug

**Intel® vPro™ Technology** Yes, when configured with an Intel® vPro™ supporting processor.

Technical Specifications - Stable & Consistent Offerings

## Stable & Consistent Offerings

**Global Series SKUs**

As part of its commitment to hardware, software, and solution innovation, HP is proud to introduce this breakthrough platform configuration stability to HP Workstation customers. HP Stable & Consistent Offerings are built on the foundation of a carefully chosen set of hardware and software designed and tested to work with all HP Z Workstation platforms through their end of life. These components and their corresponding HP Workstation platform compatibility are outlined in this section.

**Stable & Consistent Offerings**

HP Stable & Consistent Offerings are available worldwide to all HP Workstation customers-no special programs, no additional cost-no kidding. Simply select your hardware and software components when you customize your HP Workstation and be assured that you'll be able to buy that same configuration throughout the lifecycle of the product.

| Processors | Product # | Offering |
|---|---|---|
| | 6M6F2AV | Intel Xeon W5-3425 |
| | 6M6F4AV | Intel Xeon W5-3435X |

| Graphics | Product # | Offering |
|---|---|---|
| | 6W8P2AV | NVIDIA Long-Life T1000E |
| | 6W8N9AV | NVIDIA Long-Life RTX A2000E |
| | 6W8P0AV | NVIDIA Long-Life RTX A4000E |
| | 6B4F1AV | AMD Radeon RX 6400 |
| | 3F5P0AV | AMD Radeon Pro 6600 |

| Storage | Product # | Offering |
|---|---|---|
| | 3F5V2AV | Z Turbo 1TB PCIe-4x4 2280 TLC M.2 Solid State Drive |
| | 3F6V3AV | 1TB 7200RPM SATA 3.5in Enterprise |

Technical Specifications - Storage Drives

## STORAGE/HARD DRIVES

| | | | | |
|---|---|---|---|---|
| **Performance PCIe SSDs for HP Workstations** | **Z Turbo 512GB 2280 PCIe-4x4 TLC SSD** | **Capacity** | 512GB | |
| | | **Protocol** | PCIe | |
| | | **Form Factor** | M.2 | |
| | | **Controller** | NVMe | |
| | | **NAND Type** | 3D TLC | |
| | | **Endurance** | 300TBW (TB Written) | |
| | | **Reliability** | 1.5M hours | |
| | | **Rated for 24/7/365 operation** | No | |
| | | **Interface** | PCI Express 4.0 x4 electrical | |
| | | **Operating Temperature** | 32° to 158° F (0° to 70° C) | |
| | | **Performance** | **Sequential Read** | up to 6400MB/s* |
| | | | **Sequential Write** | up to 3400MB/s* |
| | | | **Random Read** | up to 600K IOPS* |
| | | | **Random Write** | up to 600K IOPS* |

*Actual performance may vary.

**NOTE:** For storage drives, GB = 1 billion bytes. TB = 1 trillion bytes. Actual formatted capacity is less. Up to 36GB of system disk (for Windows) is reserved for system recovery software.

| | | | |
|---|---|---|---|
| **Z Turbo 512GB 2280 PCIe-4x4 SED OPAL2 TLC M.2 SSD** | **Capacity** | 512GB | |
| | **Protocol** | PCIe | |
| | **Form Factor** | M.2 | |
| | **Controller** | NVMe | |
| | **NAND Type** | 3D TLC | |
| | **Endurance** | 300TBW (TB Written) | |
| | **Reliability** | 1.5M hours | |
| | **Rated for 24/7/365 operation** | No | |
| | **Interface** | PCI Express 4.0 x4 electrical | |
| | **Operating Temperature** | 32° to 158° F (0° to 70° C) | |
| | **Performance** | **Sequential Read** | up to 6400MB/s* |
| | | **Sequential Write** | up to 3400MB/s* |
| | | **Random Read** | up to 600K IOPS* |
| | | **Random Write** | up to 600K IOPS* |
| | **Self-Encrypting Drive Support** | OPAL 2 | |

*Actual performance may vary.

**NOTE:** For storage drives, GB = 1 billion bytes. TB = 1 trillion bytes. Actual formatted capacity is less. Up to 36GB of system disk (for Windows) is reserved for system recovery software.

| | | |
|---|---|---|
| **Z Turbo 1TB 2280 PCIe-4x4 SED OPAL2 TLC M.2 SSD** | **Capacity** | 1TB |
| | **Protocol** | PCIe |
| | **Form Factor** | M.2 |
| | **Controller** | NVMe |
| | **NAND Type** | 3D TLC |
| | **Endurance** | 400TBW (TB Written) |
| | **Reliability** | 1.5M hours |

| | | | |
|---|---|---|---|
| | **Rated for 24/7/365 operation** | No | |
| | **Interface** | PCI Express 4.0 x4 electrical | |
| | **Operating Temperature** | 32° to 158° F (0° to 70° C) | |
| | **Performance** | **Sequential Read** | up to 6500MB/s* |
| | | **Sequential Write** | up to 5000MB/s* |
| | | **Random Read** | up to 800K IOPS* |
| | | **Random Write** | up to 800K IOPS* |
| | **Self-Encrypting Drive Support** | OPAL 2 | |

*Actual performance may vary.

**NOTE:** For storage drives, GB = 1 billion bytes. TB = 1 trillion bytes. Actual formatted capacity is less. Up to 36GB of system disk (for Windows) is reserved for system recovery software.

| | | | |
|---|---|---|---|
| **Z Turbo 1TB 2280 PCIe-4x4 TLC SSD** | **Capacity** | 1TB | |
| | **Protocol** | PCIe | |
| | **Form Factor** | M.2 | |
| | **Controller** | NVMe | |
| | **NAND Type** | 3D TLC | |
| | **Endurance** | 400TBW (TB Written) | |
| | **Reliability** | 1.5M hours | |
| | **Rated for 24/7/365 operation** | No | |
| | **Interface** | PCI Express 4.0 x4 electrical | |
| | **Operating Temperature** | 32° to 158° F (0° to 70° C) | |
| | **Performance** | **Sequential Read** | up to 6500MB/s* |
| | | **Sequential Write** | up to 5000MB/s* |
| | | **Random Read** | up to 800K IOPS* |
| | | **Random Write** | up to 800K IOPS* |

*Actual performance may vary.

**NOTE:** For storage drives, GB = 1 billion bytes. TB = 1 trillion bytes. Actual formatted capacity is less. Up to 36GB of system disk (for Windows) is reserved for system recovery software.

| | | | |
|---|---|---|---|
| **Z Turbo 1TB 2280 PCIe-4x4 TLC SSD** | **Capacity** | 1TB | |
| | **Protocol** | PCIe | |
| | **Form Factor** | M.2 | |
| | **Controller** | NVMe | |
| | **NAND Type** | 3D TLC | |
| | **Endurance** | 400TBW (TB Written) | |
| | **Reliability** | 1.5M hours | |
| | **Rated for 24/7/365 operation** | No | |
| | **Interface** | PCI Express 4.0 x4 electrical | |
| | **Operating Temperature** | 32° to 158° F (0° to 70° C) | |
| | **Performance** | **Sequential Read** | up to 6500MB/s* |
| | | **Sequential Write** | up to 5000MB/s* |
| | | **Random Read** | up to 800K IOPS* |
| | | **Random Write** | up to 800K IOPS* |

## Technical Specifications - Storage Drives

*Actual performance may vary.

**NOTE:** For storage drives, GB = 1 billion bytes. TB = 1 trillion bytes. Actual formatted capacity is less. Up to 36GB of system disk (for Windows) is reserved for system recovery software.

| | | | |
|---|---|---|---|
| **Z Turbo 2TB 2280 PCIe-4x4 SED OPAL2 TLC M.2 SSD** | **Capacity** | 2TB | |
| | **Protocol** | PCIe | |
| | **Form Factor** | M.2 | |
| | **Controller** | NVMe | |
| | **NAND Type** | 3D TLC | |
| | **Endurance** | 500TBW (TB Written) | |
| | **Reliability** | 1.5M hours | |
| | **Rated for 24/7/365 operation** | No | |
| | **Interface** | PCI Express 4.0 x4 electrical | |
| | **Operating Temperature** | 32° to 158° F (0° to 70° C) | |
| | **Performance** | **Sequential Read** | up to 6500MB/s* |
| | | **Sequential Write** | up to 5000MB/s* |
| | | **Random Read** | up to 800K IOPS* |
| | | **Random Write** | up to 800K IOPS* |
| | **Self-Encrypting Drive Support** | OPAL 2 | |

*Actual performance may vary.

**NOTE:** For storage drives, GB = 1 billion bytes. TB = 1 trillion bytes. Actual formatted capacity is less. Up to 36GB of system disk (for Windows) is reserved for system recovery software.

| | | | |
|---|---|---|---|
| **Z Turbo 2TB 2280 PCIe-4x4 TLC SSD** | **Capacity** | 2TB | |
| | **Protocol** | PCIe | |
| | **Form Factor** | M.2 | |
| | **Controller** | NVMe | |
| | **NAND Type** | 3D TLC | |
| | **Endurance** | 500TBW (TB Written) | |
| | **Reliability** | 1.5M hours | |
| | **Rated for 24/7/365 operation** | No | |
| | **Interface** | PCI Express 4.0 x4 electrical | |
| | **Operating Temperature** | 32° to 158° F (0° to 70° C) | |
| | **Performance** | **Sequential Read** | up to 6500MB/s* |
| | | **Sequential Write** | up to 5000MB/s* |
| | | **Random Read** | up to 800K IOPS* |
| | | **Random Write** | up to 800K IOPS* |

*Actual performance may vary.

**NOTE:** For storage drives, GB = 1 billion bytes. TB = 1 trillion bytes. Actual formatted capacity is less. Up to 36GB of system disk (for Windows) is reserved for system recovery software.

| | | |
|---|---|---|
| **Z Turbo 4TB 2280 PCIe-4x4 TLC M.2 SSD** | **Capacity** | 4TB |
| | **Protocol** | PCIe |
| | **Form Factor** | M.2 |
| | **Controller** | NVMe |
| | **NAND Type** | 3D TLC |

| | | | | |
|---|---|---|---|---|
| | | **Endurance** | 600TBW (TB Written) | |
| | | **Reliability** | 1.5M hours | |
| | | **Rated for 24/7/365 operation** | No | |
| | | **Interface** | PCI Express 4.0 x4 electrical | |
| | | **Operating Temperature** | 32° to 158° F (0° to 70° C) | |
| | | **Performance** | **Sequential Read** | up to 6500MB/s* |
| | | | **Sequential Write** | up to 5000MB/s* |
| | | | **Random Read** | up to 700K IOPS* |
| | | | **Random Write** | up to 700K IOPS* |

*Actual performance may vary.
**NOTE:** For storage drives, GB = 1 billion bytes. TB = 1 trillion bytes. Actual formatted capacity is less. Up to 36GB of system disk (for Windows) is reserved for system recovery software.

| | | | | |
|---|---|---|---|---|
| | **Z Turbo 4TB 2280 PCIe-4x4 SED OPAL2 TLC M.2 SSD** | **Capacity** | 4TB | |
| | | **Protocol** | PCIe | |
| | | **Form Factor** | M.2 | |
| | | **Controller** | NVMe | |
| | | **NAND Type** | 3D TLC | |
| | | **Endurance** | 600TBW (TB Written) | |
| | | **Reliability** | 1.5M hours | |
| | | **Rated for 24/7/365 operation** | No | |
| | | **Interface** | PCI Express 4.0 x4 electrical | |
| | | **Operating Temperature** | 32° to 158° F (0° to 70° C) | |
| | | **Performance** | **Sequential Read** | up to 6500MB/s* |
| | | | **Sequential Write** | up to 5000MB/s* |
| | | | **Random Read** | up to 700K IOPS* |
| | | | **Random Write** | up to 700K IOPS* |
| | | **Self-Encrypting Drive Support** | OPAL 2 | |

*Actual performance may vary.
**NOTE:** For storage drives, GB = 1 billion bytes. TB = 1 trillion bytes. Actual formatted capacity is less. Up to 36GB of system disk (for Windows) is reserved for system recovery software.

| | | | | |
|---|---|---|---|---|
| **Performance PCIe SSDs for HP Dual Pro Carrier** | **HP Z Turbo Drive Dual Pro 512GB SSD** | **Capacity** | 512GB | |
| | | **Protocol** | PCIe | |
| | | **Form Factor** | M.2 | |
| | | **Controller** | NVMe | |
| | | **NAND Type** | 3D TLC | |
| | | **Endurance** | 300TBW (TB Written) | |
| | | **Reliability** | 1.5M hours | |
| | | **Rated for 24/7/365 operation** | No | |
| | | **Interface** | PCI Express 4.0 x4 electrical | |
| | | **Operating Temperature** | 32° to 158° F (0° to 70° C) | |
| | | **Performance** | **Sequential Read** | up to 6400MB/s* |
| | | | **Sequential Write** | up to 3400MB/s* |

| | | | |
|---|---|---|---|
| | | **Random Read** | up to 600K IOPS* |
| | | **Random Write** | up to 600K IOPS* |

*Actual performance may vary.
**NOTE:** For storage drives, GB = 1 billion bytes. TB = 1 trillion bytes. Actual formatted capacity is less. Up to 36GB of system disk (for Windows) is reserved for system recovery software.

| | | | |
|---|---|---|---|
| **HP Z Turbo Drive Dual Pro 1TB SSD** | **Capacity** | 1TB | |
| | **Protocol** | PCIe | |
| | **Form Factor** | M.2 | |
| | **Controller** | NVMe | |
| | **NAND Type** | 3D TLC | |
| | **Endurance** | 400TBW (TB Written) | |
| | **Reliability** | 1.5M hours | |
| | **Rated for 24/7/365 operation** | No | |
| | **Interface** | PCI Express 4.0 x4 electrical | |
| | **Operating Temperature** | 32° to 158° F (0° to 70° C) | |
| | **Performance** | **Sequential Read** | up to 6500MB/s* |
| | | **Sequential Write** | up to 5000MB/s* |
| | | **Random Read** | up to 800K IOPS* |
| | | **Random Write** | up to 800K IOPS* |

*Actual performance may vary.
**NOTE:** For storage drives, GB = 1 billion bytes. TB = 1 trillion bytes. Actual formatted capacity is less. Up to 36GB of system disk (for Windows) is reserved for system recovery software.

| | | | |
|---|---|---|---|
| **HP Z Turbo Drive Dual Pro 2TB SSD** | **Capacity** | 2TB | |
| | **Protocol** | PCIe | |
| | **Form Factor** | M.2 | |
| | **Controller** | NVMe | |
| | **NAND Type** | 3D TLC | |
| | **Endurance** | 500TBW (TB Written) | |
| | **Reliability** | 1.5M hours | |
| | **Rated for 24/7/365 operation** | No | |
| | **Interface** | PCI Express 4.0 x4 electrical | |
| | **Operating Temperature** | 32° to 158° F (0° to 70° C) | |
| | **Performance** | **Sequential Read** | up to 6500MB/s* |
| | | **Sequential Write** | up to 5000MB/s* |
| | | **Random Read** | up to 800K IOPS* |
| | | **Random Write** | up to 800K IOPS* |

*Actual performance may vary.
**NOTE:** For storage drives, GB = 1 billion bytes. TB = 1 trillion bytes. Actual formatted capacity is less. Up to 36GB of system disk (for Windows) is reserved for system recovery software.

| | | |
|---|---|---|
| **HP Z Turbo Drive Dual Pro 4TB SSD** | **Capacity** | 4TB |
| | **Protocol** | PCIe |
| | **Form Factor** | M.2 |
| | **Controller** | NVMe |
| | **NAND Type** | 3D TLC |

| | | | | |
|---|---|---|---|---|
| | | **Endurance** | 500TBW (TB Written) | |
| | | **Reliability** | 1.5M hours | |
| | | **Rated for 24/7/365 operation** | No | |
| | | **Interface** | PCI Express 4.0 x4 electrical | |
| | | **Operating Temperature** | 32° to 158° F (0° to 70° C) | |
| | | **Performance** | **Sequential Read** | up to 6500MB/s* |
| | | | **Sequential Write** | up to 5000MB/s* |
| | | | **Random Read** | up to 800K IOPS* |
| | | | **Random Write** | up to 800K IOPS* |

*Actual performance may vary.
**NOTE:** For storage drives, GB = 1 billion bytes. TB = 1 trillion bytes. Actual formatted capacity is less. Up to 36GB of system disk (for Windows) is reserved for system recovery software.

| | | | | |
|---|---|---|---|---|
| **Performance PCIe SSDs for HP Quad Pro Carrier** | **HP Z Turbo Drive Quad Pro 512GB SSD** | **Capacity** | 512GB | |
| | | **Protocol** | PCIe | |
| | | **Form Factor** | M.2 | |
| | | **Controller** | NVMe | |
| | | **NAND Type** | 3D TLC | |
| | | **Endurance** | 300TBW (TB Written) | |
| | | **Reliability** | 1.5M hours | |
| | | **Rated for 24/7/365 operation** | No | |
| | | **Interface** | PCI Express 4.0 x4 electrical | |
| | | **Operating Temperature** | 32° to 158° F (0° to 70° C) | |
| | | **Performance** | **Sequential Read** | up to 6400MB/s* |
| | | | **Sequential Write** | up to 3400MB/s* |
| | | | **Random Read** | up to 600K IOPS* |
| | | | **Random Write** | up to 600K IOPS* |

*Actual performance may vary.
**NOTE:** For storage drives, GB = 1 billion bytes. TB = 1 trillion bytes. Actual formatted capacity is less. Up to 36GB of system disk (for Windows) is reserved for system recovery software.

| | | | | |
|---|---|---|---|---|
| | **HP Z Turbo Drive Quad Pro 1TB SSD** | **Capacity** | 1TB | |
| | | **Protocol** | PCIe | |
| | | **Form Factor** | M.2 | |
| | | **Controller** | NVMe | |
| | | **NAND Type** | 3D TLC | |
| | | **Endurance** | 400TBW (TB Written) | |
| | | **Reliability** | 1.5M hours | |
| | | **Rated for 24/7/365 operation** | No | |
| | | **Interface** | PCI Express 4.0 x4 electrical | |
| | | **Operating Temperature** | 32° to 158° F (0° to 70° C) | |
| | | **Performance** | **Sequential Read** | up to 6500MB/s* |
| | | | **Sequential Write** | up to 5000MB/s* |
| | | | **Random Read** | up to 800K IOPS* |
| | | | **Random Write** | up to 800K IOPS* |

## Technical Specifications - Storage Drives

*Actual performance may vary.
**NOTE:** For storage drives, GB = 1 billion bytes. TB = 1 trillion bytes. Actual formatted capacity is less. Up to 36GB of system disk (for Windows) is reserved for system recovery software.

| | | | |
|---|---|---|---|
| **HP Z Turbo Drive Quad Pro 2TB SSD** | **Capacity** | 2TB | |
| | **Protocol** | PCIe | |
| | **Form Factor** | M.2 | |
| | **Controller** | NVMe | |
| | **NAND Type** | 3D TLC | |
| | **Endurance** | 500TBW (TB Written) | |
| | **Reliability** | 1.5M hours | |
| | **Rated for 24/7/365 operation** | No | |
| | **Interface** | PCI Express 4.0 x4 electrical | |
| | **Operating Temperature** | 32° to 158° F (0° to 70° C) | |
| | **Performance** | **Sequential Read** | up to 6500MB/s* |
| | | **Sequential Write** | up to 5000MB/s* |
| | | **Random Read** | up to 800K IOPS* |
| | | **Random Write** | up to 800K IOPS* |

*Actual performance may vary.
**NOTE:** For storage drives, GB = 1 billion bytes. TB = 1 trillion bytes. Actual formatted capacity is less. Up to 36GB of system disk (for Windows) is reserved for system recovery software.

| | | | |
|---|---|---|---|
| **HP Z Turbo Drive Quad Pro 4TB SSD** | **Capacity** | 4TB | |
| | **Protocol** | PCIe | |
| | **Form Factor** | M.2 | |
| | **Controller** | NVMe | |
| | **NAND Type** | 3D TLC | |
| | **Endurance** | 500TBW (TB Written) | |
| | **Reliability** | 1.5M hours | |
| | **Rated for 24/7/365 operation** | No | |
| | **Interface** | PCI Express 4.0 x4 electrical | |
| | **Operating Temperature** | 32° to 158° F (0° to 70° C) | |
| | **Performance** | **Sequential Read** | up to 6500MB/s* |
| | | **Sequential Write** | up to 5000MB/s* |
| | | **Random Read** | up to 800K IOPS* |
| | | **Random Write** | up to 800K IOPS* |

*Actual performance may vary.
**NOTE:** For storage drives, GB = 1 billion bytes. TB = 1 trillion bytes. Actual formatted capacity is less. Up to 36GB of system disk (for Windows) is reserved for system recovery software.

| | | | |
|---|---|---|---|
| **SATA Hard Drives for HP Workstations** | **1TB 7200RPM SATA 3.5in Enterprise HDD** | **Capacity** | 1TB |
| | | **Protocol** | SATA |
| | | **Form Factor** | 3.5" |
| | | **Controller** | AHCI |
| | | **Reliability** | 2.0M hours |
| | | **Rated Power On Hours** | 8760/yr |

| | | | |
|---|---|---|---|
| | **Annualized Failure Rate (based on Rated POH)** | <0.62% | |
| | **Rated for 24/7/365 operation** | YES | |
| | **Height** | 1 in; 2.54 cm | |
| | **Width** | **Media Diameter** | 3.5 in; 8.9 cm |
| | | **Physical Size** | 4 in; 10.17 cm |
| | **Interface** | Serial ATA (6.0Gb/s), NCQ enabled | |
| | **Synchronous Transfer Rate** (Maximum) | Up to 600MB/s * | |
| | **Buffer** | 128MB | |
| | **Cache** | Adaptive | |
| | **Seek Time** (typical reads, includes controller overhead, including settling) | **Single Track** | 0.32 ms * |
| | | **Average** | 7.45 ms * |
| | | **Full Stroke** | 14.2 ms * |
| | **Rotational Speed** | 7,200 rpm | |
| | **Logical Blocks** | 1,953,525,168 | |
| | **Operating Temperature** | 41° to 131° F (5° to 55° C) | |
| | **Performance** | **Sequential Read** | up to 226MB/s* |
| | | **Sequential Write** | up to 226MB/s* |

*Actual performance may vary.

**NOTE:** For storage drives, GB = 1 billion bytes. TB = 1 trillion bytes. Actual formatted capacity is less. Up to 36GB of system disk (for Windows) is reserved for system recovery software.

| | | | |
|---|---|---|---|
| **2TB 7200RPM SATA 3.5in Enterprise HDD** | **Capacity** | 2TB | |
| | **Protocol** | SATA | |
| | **Form Factor** | 3.5" | |
| | **Controller** | AHCI | |
| | **Reliability** | 2.0M hours | |
| | **Rated Power On Hours** | 8760/yr | |
| | **Annualized Failure Rate (based on Rated POH)** | <0.62% | |
| | **Rated for 24/7/365 operation** | YES | |
| | **Height** | 1 in; 2.54 cm | |
| | **Width** | **Media Diameter** | 3.5 in; 8.9 cm |
| | | **Physical Size** | 4 in; 10.17 cm |
| | **Interface** | Serial ATA (6.0Gb/s), NCQ enabled | |
| | **Synchronous Transfer Rate** (Maximum) | Up to 600MB/s * | |
| | **Buffer** | 128MB | |
| | **Cache** | Adaptive | |
| | **Seek Time** (typical reads, includes controller overhead, including settling) | **Single Track** | 0.7 ms * |
| | | **Average** | 8.5 ms * |
| | | **Full Stroke** | 15.7 ms * |
| | **Rotational Speed** | 7,200 rpm | |

| | | | |
|---|---|---|---|
| | **Logical Blocks** | 3,907,029,168 | |
| | **Operating Temperature** | 41° to 131° F (5° to 55° C) | |
| | **Performance** | **Sequential Read** | up to 226MB/s* |
| | | **Sequential Write** | up to 226MB/s* |

*Actual performance may vary.

**NOTE:** For storage drives, GB = 1 billion bytes. TB = 1 trillion bytes. Actual formatted capacity is less. Up to 36GB of system disk (for Windows) is reserved for system recovery software.

| | | | |
|---|---|---|---|
| **4TB 7200RPM SATA 3.5in Enterprise HDD** | **Capacity** | 4TB | |
| | **Protocol** | SATA | |
| | **Form Factor** | 3.5" | |
| | **Controller** | AHCI | |
| | **Reliability** | 2.0M hours | |
| | **Rated Power On Hours** | 8760/yr | |
| | **Annualized Failure Rate (based on Rated POH)** | <0.62% | |
| | **Rated for 24/7/365 operation** | YES | |
| | **Height** | 1 in; 2.54 cm | |
| | **Width** | **Media Diameter** | 3.5 in; 8.9 cm |
| | | **Physical Size** | 4 in; 10.17 cm |
| | **Interface** | Serial ATA (6.0Gb/s), NCQ enabled | |
| | **Synchronous Transfer Rate** (Maximum) | Up to 600MB/s * | |
| | **Buffer** | 256MB | |
| | **Cache** | Adaptive | |
| | **Seek Time** (typical reads, includes controller overhead, including settling) | **Single Track** | 0.7 ms * |
| | | **Average** | 8.5 ms * |
| | | **Full Stroke** | 15.7 ms * |
| | **Rotational Speed** | 7,200 rpm | |
| | **Logical Blocks** | 7,814,037,168 | |
| | **Operating Temperature** | 41° to 131° F (5° to 55° C) | |
| | **Performance** | **Sequential Read** | up to 226MB/s* |
| | | **Sequential Write** | up to 226MB/s* |

*Actual performance may vary.

**NOTE:** For storage drives, GB = 1 billion bytes. TB = 1 trillion bytes. Actual formatted capacity is less. Up to 36GB of system disk (for Windows) is reserved for system recovery software.

| | | |
|---|---|---|
| **8TB 7200RPM SATA 3.5in Enterprise HDD** | **Capacity** | 8TB |
| | **Protocol** | SATA |
| | **Form Factor** | 3.5" |
| | **Controller** | AHCI |
| | **Reliability** | 2.0M hours |
| | **Rated Power On Hours** | 8760/yr |
| | **Annualized Failure Rate (based on Rated POH)** | <0.62% |
| | **Rated for 24/7/365 operation** | YES |

## Technical Specifications - Storage Drives

| | | | |
|---|---|---|---|
| | **Height** | 1 in; 2.54 cm | |
| | **Width** | **Media Diameter** | 3.5 in; 8.9 cm |
| | | **Physical Size** | 4 in; 10.17 cm |
| | **Interface** | Serial ATA (6.0Gb/s), NCQ enabled | |
| | **Synchronous Transfer Rate** (Maximum) | Up to 600MB/s * | |
| | **Buffer** | 256MB | |
| | **Cache** | Adaptive | |
| | **Seek Time** (typical reads, includes controller overhead, including settling) | **Single Track** | 0.7 ms * |
| | | **Average** | 8.5 ms * |
| | | **Full Stroke** | 15.7 ms * |
| | **Rotational Speed** | 7,200 rpm | |
| | **Logical Blocks** | 15,628,053,168 | |
| | **Operating Temperature** | 41° to 140° F (5° to 60° C) | |
| | **Performance** | **Sequential Read** | up to 226MB/s* |
| | | **Sequential Write** | up to 226MB/s* |

*Actual performance may vary.

**NOTE:** For storage drives, GB = 1 billion bytes. TB = 1 trillion bytes. Actual formatted capacity is less. Up to 36GB of system disk (for Windows) is reserved for system recovery software.

| | | | |
|---|---|---|---|
| **12TB 7200RPM SATA-6G 3.5in Enterprise HDD** | **Capacity** | 12TB | |
| | **Protocol** | SATA | |
| | **Form Factor** | 3.5" | |
| | **Controller** | AHCI | |
| | **Reliability** | 2.0M hours | |
| | **Rated Power On Hours** | 8760/yr | |
| | **Annualized Failure Rate (based on Rated POH)** | <0.62% | |
| | **Rated for 24/7/365 operation** | YES | |
| | **Height** | 1 in; 2.54 cm | |
| | **Width** | **Media Diameter** | 3.5 in; 8.9 cm |
| | | **Physical Size** | 4 in; 10.17 cm |
| | **Interface** | Serial ATA (6.0Gb/s), NCQ enabled | |
| | **Synchronous Transfer Rate** (Maximum) | Up to 600MB/s * | |
| | **Buffer** | 256MB | |
| | **Cache** | Adaptive | |
| | **Seek Time** (typical reads, includes controller overhead, including settling) | **Single Track** | 0.7 ms * |
| | | **Average** | 8.5 ms * |
| | | **Full Stroke** | 15.7 ms * |
| | **Rotational Speed** | 7,200 rpm | |
| | **Logical Blocks** | 23,437,770,752 | |
| | **Operating Temperature** | 41° to 140° F (5° to 60° C) | |
| | **Performance** | **Sequential Read** | up to 226MB/s* |
| | | **Sequential Write** | up to 226MB/s* |

## Technical Specifications - Storage Drives

*Actual performance may vary.

**NOTE:** For storage drives, GB = 1 billion bytes. TB = 1 trillion bytes. Actual formatted capacity is less. Up to 36GB of system disk (for Windows) is reserved for system recovery software.

Technical Specifications - Graphics

## GRAPHICS

| | | |
|---|---|---|
| **NVIDIA® A800 48GB** | **Form Factor** | Full-Height Dual Slot (4.4” Height x 10.5” Length) |
| | **Max Power Consumption** | 240W |
| | **GPU Memory** | 40GB HBM2<br>Memory Bandwidth: 1,555 GB/s<br>Memory Width: 5,120-bit |
| | **Connectors** | NVLink<br>Requires: 1x 16-pin CEM 5 power connector (adapter may be needed) |
| | **Maximum Resolution** | Not supported - No display out |
| | **Bus Type** | PCI Express 4.0 x16 |
| | **Available Graphics Drivers** | Windows 10<br>Windows 11 |
| **NVIDIA® RTX™ 6000 Ada 48GB** | **Form Factor** | Full-Height Dual Slot (4.4” Height x 10.5” Length)<br>Weight: 1230 grams / 2.71 lbs (with extender) |
| | **Max Power Consumption** | Power: 300 Watts<br>Cooling: Active |
| | **GPU Memory** | 48GB GDDR6 memory ECC<br>Memory Bandwidth: Up to 960 GB/s<br>Memory Width: 384 bits |
| | **Connectors** | 4x DisplayPort 1.4a<br>Quadro Sync II connector<br>Stereo Sync<br>Requires CEM 5.0 16-pin auxiliary power adapter |
| | **Maximum Resolution** | 7680x4320 @ 120Hz |
| | **Bus Type** | PCI Express 4.0 x16 |
| | **Available Graphics Drivers** | Windows 11<br>Windows 10<br>Linux® 64-bit |
| **NVIDIA® RTX™ A6000 48GB** | **Form Factor** | Full-Height Dual Slot (4.4” Height x 10.5” Length)<br>Weight: 1230 grams / 2.71 lbs (with extender) |
| | **Max Power Consumption** | Power: 300 Watts<br>Cooling: Active |
| | **GPU Memory** | 48GB GDDR6 memory<br>ECC optional<br>Memory Bandwidth: Up to 768 GB/s<br>Memory Width: 384 bit |
| | **Connectors** | 4x DisplayPort 1.4a<br>Quadro Sync II connector<br>NVLink®<br>Stereo Sync<br>Requires 8-pin auxiliary power cable (HP Graphics Power Cable CPU-8p to CPU-8p) |
| | **Maximum Resolution** | 7680x4320 @ 120Hz |
| | **Bus Type** | PCI Express 4.0 x16 |

## Technical Specifications - Graphics

| | | |
|---|---|---|
| | **Available Graphics Drivers** | Windows 11<br>Windows 10<br>Linux® 64-bit |
| **NVIDIA® RTX™ 5000 Ada 32GB** | **Form Factor** | Full-Height Dual Slot (4.4” Height x 13.85” Length)<br>Weight: 1130 grams / 2.49 lbs (excluding extender) |
| | **Max Power Consumption** | Power: 250 Watts<br>Cooling: Active |
| | **GPU Memory** | 32GB GDDR6 memory ECC<br>Memory Bandwidth: Up to 576 GB/s<br>Memory Width: 256 bits |
| | **Connectors** | 4x DisplayPort 1.4a<br>Quadro Sync II connector<br>Stereo Sync<br>Requires CEM 5.0 16-pin auxiliary power adapter |
| | **Maximum Resolution** | 7680x4320 @ 120Hz |
| | **Bus Type** | PCI Express 4.0 x16 |
| | **Available Graphics Drivers** | Windows 11<br>Windows 10<br>Linux® 64-bit |
| **AMD® Radeon™ Pro W7900 48GB** | **Form Factor** | Full-Height Triple Slot (4.4” Height x 10.5” Length) |
| | **Max Power Consumption** | Power: 295W<br>Cooling: Active |
| | **GPU Memory** | 48GB GDDR6 memory<br>Memory Bandwidth: Up to 864 GB/s<br>Memory Width: 384 bit |
| | **Connectors** | 3x DisplayPort 2.1<br>1x Enhanced Mini DisplayPort 2.1<br>Requires 2x 8-pin auxiliary power connectors |
| | **Maximum Resolution** | 12288x6912 @ 120Hz |
| | **Bus Type** | PCI Express 4.0 x16 |
| | **Available Graphics Drivers** | Windows 11<br>Windows 10<br>Linux® 64-bit |
| **NVIDIA® RTX™ A5000 24GB** | **Form Factor** | Full-Height Dual Slot (4.4” Height x 10.5” Length)<br>Weight: 1049 grams + 80 grams extender |
| | **Max Power Consumption** | Power: 230W<br>Cooling: Active |
| | **GPU Memory** | 24GB GDDR6 memory<br>ECC optional<br>Memory Bandwidth: Up to 768 GB/s<br>Memory Width: 384 bit |
| | **Connectors** | 4x DisplayPort 1.4a<br>Quadro Sync II connector |

## Technical Specifications - Graphics

| | | |
|---|---|---|
| | | NVLink®<br>Stereo Sync<br>Requires 8-pin auxiliary power |
| | **Maximum Resolution** | 7680x4320 @ 120Hz |
| | **Bus Type** | PCI Express 4.0 x16 |
| | **Available Graphics Drivers** | Windows 11<br>Windows 10<br>Linux® 64-bit |

| | | |
|---|---|---|
| **NVIDIA® RTX 4500 Ada 24GB** | **Form Factor** | Full-Height Dual Slot (4.4” Height x 10.5” Length) |
| | **Max Power Consumption** | 210W |
| | **GPU Memory** | 24GB GDDR6<br>Memory Bandwidth: 432 GB/s<br>Memory Width: 192-bit |
| | **Connectors** | 4x DisplayPort 1.4a<br>Requires: 1x 16-pin CEM 5 power connector (adapter may be needed) |
| | **Maximum Resolution** | 4x @ 4096 x 2160 @ 120Hz<br>4x @ 5120 x 2880 @ 60Hz<br>2x @ 7680 x 4320 @ 60Hz |
| | **Bus Type** | PCI Exress 4.0 x16 |
| | **Available Graphics Drivers** | Windows 10<br>Windows 11 |

| | | |
|---|---|---|
| **NVIDIA® RTX™ A4500 20GB** | **Form Factor** | Full-Height Dual Slot (4.4” Height x 10.5” Length)<br>Weight: 1049 grams + 80 grams extender |
| | **Max Power Consumption** | Power: 200W<br>Cooling: Active |
| | **GPU Memory** | 20GB GDDR6 memory<br>Memory Bandwidth: Up to 640 GB/s<br>Memory Width: 320 bit |
| | **Connectors** | 4x DisplayPort 1.4a<br>Quadro Sync II connector<br>NVLink®<br>Stereo Sync<br>Requires 8-pin auxiliary power |
| | **Maximum Resolution** | 7680x4320 @ 120Hz |
| | **Bus Type** | PCI Express 4.0 x16 |
| | **Available Graphics Drivers** | Windows 11<br>Windows 10<br>Linux® 64-bit |

| | | |
|---|---|---|
| **NVIDIA® RTX™ 4000 Ada 20GB** | **Form Factor** | Full-Height Single Slot (4.4” Height x 9.5” Length) |

## Technical Specifications - Graphics

| | | |
|---|---|---|
| | **Max Power Consumption** | Power: 130W<br>Cooling: Active |
| | **GPU Memory** | 20GB GDDR6 memory<br>Memory Bandwidth: Up to 360 GB/s<br>Memory Width: 256 bit |
| | **Connectors** | 4x DisplayPort 1.4a<br>Requires 6-pin auxiliary power |
| | **Maximum Resolution** | 7680x4320 @ 120Hz |
| | **Bus Type** | PCI Express 4.0 x16 |
| | **Available Graphics Drivers** | Windows 11<br>Windows 10<br>Linux® 64-bit |
| **NVIDIA® RTX™ A4000 16GB** | **Form Factor** | Full-Height Single Slot (4.4” Height x 9.5” Length)<br>Weight: 500 grams |
| | **Max Power Consumption** | Power: 140W<br>Cooling: Active |
| | **GPU Memory** | 16GB GDDR6 memory<br>Memory Bandwidth: Up to 448 GB/s<br>Memory Width: 256 bit |
| | **Connectors** | 4x DisplayPort 1.4a<br>Quadro Sync II connector<br>Stereo Sync<br>Requires 6-pin auxiliary power |
| | **Maximum Resolution** | 7680x4320 @ 120Hz |
| | **Bus Type** | PCI Express 4.0 x16 |
| | **Available Graphics Drivers** | Windows 11<br>Windows 10<br>Linux® 64-bit |
| **NVIDIA® Long-Life RTX™ A4000E 16GB** | **Form Factor** | Full-Height Single Slot (4.4” Height x 9.5” Length)<br>Weight: 500 grams |
| | **Max Power Consumption** | Power: 140W<br>Cooling: Active |
| | **GPU Memory** | 16GB GDDR6 memory<br>Memory Bandwidth: Up to 448 GB/s<br>Memory Width: 256 bit |
| | **Connectors** | 4x DisplayPort 1.4a<br>Quadro Sync II connector<br>Stereo Sync<br>Requires 6-pin auxiliary power |
| | **Maximum Resolution** | 7680x4320 @ 120Hz |
| | **Bus Type** | PCI Express 4.0 x16 |
| | **Available Graphics Drivers** | Windows 11<br>Windows 10<br>Linux® 64-bit |

## Technical Specifications - Graphics

| | | |
|---|---|---|
| **NVIDIA® RTX™ 2000 Ada 16GB** | **Form Factor** | Half Height Dual Slot (2.7" Height x 6.7" Length) |
| | **Max Power Consumption** | 70W |
| | **GPU Memory** | 16GB GDDR6<br>Memory Bandwidth: 224 GB/s<br>Memory Width: 128-bit |
| | **Connectors** | 4x Mini DisplayPort 1.4a |
| | **Maximum Resolution** | 4x 4096 x 2160 @ 120 Hz<br>4x 5120 x 2880 @ 60 Hz<br>2x 7680 x 4320 @ 60 Hz |
| | **Bus Type** | PCI Express 4.0 x8 |
| | **Available Graphics Drivers** | Windows 10<br>Windows 11 |
| **NVIDIA® RTX™ A2000 12GB** | **Form Factor** | Half-Height Dual Slot (2.713” Height x 6.6” Length)<br>Weight: 306 grams |
| | **Max Power Consumption** | Power: 70W<br>Cooling: Active |
| | **GPU Memory** | 12GB GDDR6 memory<br>Memory Bandwidth: Up to 288 GB/s<br>Memory Width: 192 bit |
| | **Connectors** | 4x mini-DisplayPort 1.4a |
| | **Maximum Resolution** | 7680x4320 @ 120Hz |
| | **Bus Type** | PCI Express 4.0 x16 |
| | **Available Graphics Drivers** | Windows 11<br>Windows 10<br>Linux® 64-bit |
| **NVIDIA® Long-Life RTX™ A2000E 12GB** | **Form Factor** | Half-Height Dual Slot (2.713” Height x 6.6” Length)<br>Weight: 306 grams |
| | **Max Power Consumption** | Power: 70W<br>Cooling: Active |
| | **GPU Memory** | 12GB GDDR6 memory<br>Memory Bandwidth: Up to 288 GB/s<br>Memory Width: 192 bit |
| | **Connectors** | 4x mini-DisplayPort 1.4a |
| | **Maximum Resolution** | 7680x4320 @ 120Hz |
| | **Bus Type** | PCI Express 4.0 x16 |
| | **Available Graphics Drivers** | Windows 11<br>Windows 10<br>Linux® 64-bit |
| **NVIDIA® T1000 8GB** | **Form Factor** | Half-Height Single Slot (2.713” Height x 6.137” Length)<br>Weight: 132.6 grams |
| | **Max Power Consumption** | Power: 50W<br>Cooling: Active |

## Technical Specifications - Graphics

| | | |
|---|---|---|
| | **GPU Memory** | 8GB GDDR6 memory<br>Memory Bandwidth: Up to 160 GB/s<br>Memory Width: 128 bit |
| | **Connectors** | 4x mini-DisplayPort 1.4a |
| | **Maximum Resolution** | 7680x4320 @ 120Hz |
| | **Bus Type** | PCI Express 3.0 x16 |
| | **Available Graphics Drivers** | Windows 11<br>Windows 10<br>Linux® 64-bit |
| **NVIDIA® Long-Life T1000E 8GB** | **Form Factor** | Half-Height Single Slot (2.713" Height x 6.137" Length)<br>Weight: 132.6 grams |
| | **Max Power Consumption** | Power: 50W<br>Cooling: Active |
| | **GPU Memory** | 8GB GDDR6 memory<br>Memory Bandwidth: Up to 160 GB/s<br>Memory Width: 128 bit |
| | **Connectors** | 4x mini-DisplayPort 1.4a |
| | **Maximum Resolution** | 7680x4320 @ 120Hz |
| | **Bus Type** | PCI Express 3.0 x16 |
| | **Available Graphics Drivers** | Windows 11<br>Windows 10<br>Linux® 64-bit |
| **NVIDIA® T1000 4GB** | **Form Factor** | Half-Height Single Slot (2.713" Height x 6.137" Length)<br>Weight: 132.6 grams |
| | **Max Power Consumption** | Power: 50W<br>Cooling: Active |
| | **GPU Memory** | 4GB GDDR6 memory<br>Memory Bandwidth: Up to 160 GB/s<br>Memory Width: 128 bit |
| | **Connectors** | 4x mini-DisplayPort 1.4a |
| | **Maximum Resolution** | 7680x4320 @ 120Hz |
| | **Bus Type** | PCI Express 3.0 x16 |
| | **Available Graphics Drivers** | Windows 11<br>Windows 10<br>Linux® 64-bit |
| **NVIDIA® T400 4GB** | **Form Factor** | Half-Height Single Slot (2.713" Height x 6.137" Length)<br>Weight: 123.5 grams |
| | **Max Power Consumption** | Power: 30W<br>Cooling: Active |
| | **GPU Memory** | 4GB GDDR6 memory<br>Memory Bandwidth: Up to 80 GB/s<br>Memory Width: 64 bit |
| | **Connectors** | 3x mini-DisplayPort 1.4a |
| | **Maximum Resolution** | 7680x4320 @ 120Hz |

## Technical Specifications - Graphics

| | | |
|---|---|---|
| | **Bus Type** | PCI Express 3.0 x16 |
| | **Available Graphics Drivers** | Windows 11<br>Windows 10<br>Linux® 64-bit |
| **AMD® Radeon™ Pro W6800 32GB** | **Form Factor** | Full-Height Dual Slot (4.4” Height x 10.5” Length)<br>Weight: 850 grams |
| | **Max Power Consumption** | Power: 261W<br>Cooling: Active |
| | **GPU Memory** | 32GB GDDR6 memory<br>Memory Bandwidth: Up to 512 GB/s<br>Memory Width: 256 bit |
| | **Connectors** | 6x mini-DisplayPort 1.4<br>Requires 8-pin+6-pin auxiliary power |
| | **Maximum Resolution** | 7680x4320 @ 60Hz |
| | **Bus Type** | PCI Express 4.0 x16 |
| | **Available Graphics Drivers** | Windows 11<br>Windows 10<br>Linux® 64-bit |
| **AMD® Radeon™ Pro W7600 8GB** | **Form Factor** | Full-Height Single Slot (4.38"<br>Height x 9.5" Length) |
| | **Max Power Consumption** | 130W |
| | **GPU Memory** | 8GB GDDR6<br>Memory Bandwidth: 288 GB/s<br>Memory Width: 128-bit |
| | **Connectors** | 4x DP 2.1<br>Requires: 1x 6-pin PCIe Aux Power |
| | **Maximum Resolution** | 4x @ 3840x2160 (4K)<br>4x @ 5120x2880 (5K)<br>2x @ 7680x4320 (8K) |
| | **Bus Type** | PCI Express 4.0 x8 |
| | **Available Graphics Drivers** | Windows 10<br>Windows 11 |
| **AMD® Radeon™ Pro W7500 8GB** | **Form Factor** | Full-Height Single Slot (4.38"<br>Height x 8.5" Length) |
| | **Max Power Consumption** | 70W |
| | **GPU Memory** | 8 GB GDDR6<br>Memory Bandwidth: 173 GB/s<br>Memory Width: 128-bit |
| | **Connectors** | 4x DP 2.1 |
| | **Maximum Resolution** | 4x @ 3840x2160 (4K)<br>4x @ 5120x2880 (5K)<br>2x @ 7680x4320 (8K) |
| | **Bus Type** | PCI Express 4.0 x8 |
| | **Available Graphics Drivers** | Windows 10<br>Windows 11 |

## Technical Specifications - Graphics

| | | |
|---|---|---|
| **AMD® Radeon™ Pro W6600 8GB** | **Form Factor** | Full-Height Single Slot (4.38" Height x 9.50" Length)<br>Weight: 132.6 grams |
| | **Max Power Consumption** | Power: 122W<br>Cooling: Active |
| | **GPU Memory** | 8GB GDDR6 memory<br>Memory Bandwidth: Up to 224 GB/s<br>Memory Width: 128 bit |
| | **Connectors** | 4x DisplayPort 1.4<br>Requires 6-pin auxiliary power |
| | **Maximum Resolution** | 7680x4320 @ 60Hz |
| | **Bus Type** | PCI Express 4.0 x16 (x8 electrical) |
| | **Available Graphics Drivers** | Windows 11<br>Windows 10<br>Linux® 64-bit |
| **AMD® Radeon™ RX 6400 4GB** | **Form Factor** | Half-Height Single Slot (4.4" Height x 10.5" Length)<br>Weight: 155 grams |
| | **Max Power Consumption** | Power: 50W<br>Cooling: Active |
| | **GPU Memory** | 4GB GDDR6 memory<br>Memory Bandwidth:<br>Memory Width: |
| | **Connectors** | 1x DisplayPort 1.4a<br>1x HDMI |
| | **Maximum Resolution** | 7680x4320 @ 60Hz |
| | **Bus Type** | PCI Express 4.0 x4 |
| | **Available Graphics Drivers** | Windows 11<br>Windows 10<br>Linux® 64-bit |
| **Intel® Arc Pro A40 6GB** | **Form Factor** | Half-Height Single Slot (2.7" Height x 6.6" Length)<br>Weight: 220 grams |
| | **Max Power Consumption** | Power: 50W<br>Cooling: Active |
| | **GPU Memory** | 6GB GDDR6 memory<br>Memory Bandwidth: 192GB<br>Memory Width: 96 bit |
| | **Connectors** | 4x mini- DisplayPort 1.4 |
| | **Maximum Resolution** | 7680x4320 @ 60Hz |
| | **Bus Type** | PCI Express 4.0 x8 |
| | **Available Graphics Drivers** | Windows 11<br>Windows 10 |

## Technical Specifications - Graphics

Notes for all graphics cards:

- Some graphics and GPU compute cards can consume a great deal of power, thus combinations of cards with other components may exceed a particular power supply's output capability.
- Some graphics and GPU compute cards require supplemental power cables.
- Not all chassis/PSU configurations have enough supplemental power cables of the correct type for all graphics configurations.
- Refer to the Power Supply section within Overview for more information.

### OPTICAL AND REMOVABLE STORAGE

| | | | |
|---|---|---|---|
| **HP 9.5mm Slim Blu-Ray Writer** | **Description** | 9.5mm height, tray-load | |
| | **Mounting Orientation** | Either horizontal or vertical | |
| | **Interface Type** | SATA/ATAPI | |
| | **Dimensions** (WxHxD) | 128 x 9.5 x 127mm | |
| | **Supported Media Types** | BD-ROM<br>BD-R<br>BD-RE<br>DVD+R<br>DVD+RW<br>DVD+R DL<br>DVD-R DL<br>DVD-R<br>DVD-RW<br>CD-R<br>CD-RW | |
| | **Disc Capacity** | **DVD-ROM** | 8.5 GB DL or 4.7 GB standard |
| | | **Blu-ray** | 25 GB (single-layer)<br>50 GB (dual-layer)<br>100/128 GB (BDXL) |
| | | **Full Stroke DVD** | < 230 ms (seek) |
| | | **Full Stroke CD** | < 220 ms (seek) |
| | | **Blu-ray** | < 230 ms (seek) (Full Stroke Blu-ray) |
| | | **Startup Time** | (Time to drive ready from tray loading)<br>BD-ROM (SL/DL) 25S / 28S<br>BD-R (SL/DL) 25S / 28S<br>BD-RE (SL/DL) 25S / 28S<br>DVD-ROM (SL/DL) 18S / 18S<br>DVD-R (SL/DL) 25S / 25S<br>DVD-RW 25S<br>DVD+R (SL/DL) 25S / 25S<br>DVD+RW 25S<br>CD-ROM 15S |
| | **Maximum Data Transfer Rates** | **CD ROM Read** | CD-ROM, CD-R Up to 24X<br>CD-RW Up to 24X |
| | | **DVD ROM Read** | DVD+RW Up to 8X<br>DVD-RW Up to 8X |

| | | |
|---|---|---|
| | | DVD+R DL Up to 8X<br>DVD-R DL Up to 8X<br>DVD-ROM Up to 8X<br>DVD-ROM DL Up to 8X<br>DVD+R Up to 8X<br>DVD-R Up to 8X |
| | **Blu-ray** | BD-ROM Up to 6X<br>BD-ROM DL Up to 6X<br>BD-R Up to 6X<br>BD-R DL Up to 6X<br>BD-R Up to 6X<br>BD-RE SL/DL Up to 6X |
| **Power** | **Source** | SATA DC power receptacle |
| | **DC Power Requirements** | 5 VDC ± 5%-100 mV ripple p-p |
| | **DC Current** | 5 VDC -900 mA typical, 2000mA maximum |
| **Operating Environmental** (all conditions non-condensing) | **Temperature** | 41° to 122° F (5° to 50° C) |
| | **Relative Humidity** | 10% to 80% |
| | **Maximum Wet Bulb Temperature** | 84° F (29° C) |
| **Operating Systems Supported** | Windows 11, Windows 10, Windows 7 Professional 64-bit,<br>Red Hat® Enterprise Linux® (RHEL) 8, 9 Desktop/Workstation<br>SUSE Linux® Enterprise Desktop 15<br>Ubuntu 20.04, 22.04 LTS<br><br>No driver is required for this device. Native support is provided by the operating system. | |
| **Kit Contents** | 9.5mm Slim BDXL Blu-Ray Writer, 5.25" ODD Bay adapter/carrier, slim SATA data/power cable, installation guide<br>As Blu-ray is a new format containing new technologies, certain disc, digital connection, compatibility and/or performance issues may arise, and do not constitute defects in the product. Flawless playback on all systems is not guaranteed. In order for some Blu-ray titles to play, they may require a DVI or HDMI digital connection and your display may require HDCP support. HD-DVD movies cannot be played on this workstation. | |

**NOTE:** HD-DVD disks cannot be played on the DVD-ROM drive. No support for DVD-RAM. Actual speeds may vary. Don't copy copyright-protected materials. Double Layer discs can store more data than single layer discs. Discs burned with this drive may not be compatible with many existing single-layer DVD drives and players. Flawless playback on all systems is not guaranteed.

| | | |
|---|---|---|
| **HP 9.5mm Slim DVD Writer** | **Description** | 9.5mm height, tray-load |
| | **Mounting Orientation** | Either horizontal or vertical |
| | **Interface Type** | SATA/ATAPI |
| | **Dimensions** (WxHxD) | 128 x 9.5 x 127mm |
| | **Supported Media Types** | DVD+R<br>DVD+RW<br>DVD+R DL<br>DVD-R DL |

| | | |
|---|---|---|
| | DVD-R<br>DVD-RW<br>CD-R<br>CD-RW | |
| **Disc Capacity** | **DVD-ROM** | 8.5 GB DL or 4.7 GB standard |
| | **Full Stroke DVD** | < 200 ms (seek) |
| | **Full Stroke CD** | < 200 ms (seek) |
| **Maximum Data Transfer Rates** | **CD ROM Read** | CD-ROM, CD-R Up to 24X<br>CD-RW Up to 24X |
| | **DVD ROM Read** | DVD+RW Up to 8X<br>DVD-RW Up to 8X<br>DVD+R DL Up to 8X<br>DVD-R DL Up to 8X<br>DVD-ROM Up to 8X<br>DVD-ROM DL Up to 8X<br>DVD+R Up to 8X<br>DVD-R Up to 8X |
| **Power** | **Source** | SATA DC power receptacle |
| | **DC Power Requirements** | 5 VDC ± 5%-100 mV ripple p-p |
| | **DC Current** | 5 VDC -< 800 mA typical, <1600 mA maximum |
| **Operating Environmental** (all conditions non-condensing) | **Temperature** | 41° to 122° F (5° to 50° C) |
| | **Relative Humidity** | 10% to 80% |
| | **Maximum Wet Bulb Temperature** | 84° F (29° C) |
| **Operating Systems Supported** | Windows 11, Windows 10, Windows 7 Professional 64-bit, Windows Vista Business 64*, Windows 2000.<br>Red Hat® Enterprise Linux® (RHEL) 8, 9 Desktop/Workstation<br>SUSE Linux® Enterprise Desktop 15<br>Ubuntu 20.04, 22.04 LTS<br><br>* No driver is required for this device. Native support is provided by the operating system | |
| **Kit Contents** | HP SATA DVD Writer drive, installation guide. | |

**NOTE:** Actual speeds may vary. No support for DVD-RAM (DVD Writer). Does not permit copying of commercially available DVD movies or other copyright protected materials. Intended for creation and storage of your original material and other lawful uses. Double Layer discs can store more data than single layer discs. However, double-layer discs burned with this drive may not be compatible with many existing single-layer DVD drives and players.

| | | |
|---|---|---|
| **HP 9.5mm Slim DVD-ROM** | **Description** | 9.5mm height, tray-load |
| | **Mounting Orientation** | Either horizontal or vertical |
| | **Interface Type** | SATA/ATAPI |
| | **Dimensions** (WxHxD) | 128 x 9.5 x 127mm |
| | **Disc Capacity** | **DVD-ROM** | Single layer: Up to 4.7 GB<br>Double layer: Up to 8.5 GB |
| | **Access Times** | **DVD-ROM Single Layer** | < 110 ms (typical) |

Technical Specifications - Graphics

| | | |
|---|---|---|
| | **CD-ROM Mode 1** | < 110 ms (typical) |
| | **Full Stroke DVD** | < 230 ms (typical) |
| | **Full Stroke CD** | < 220 ms (typical) |
| **Power** | **Source** | SATA DC power receptacle |
| | **DC Power Requirements** | 5 VDC ± 5%-100 mV ripple p-p |
| | **DC Current** | 5 VDC -< 800 mA typical, <1600 mA maximum |
| **Operating Environmental** (all conditions non-condensing) | **Temperature** | 41° to 122° F (5° to 50° C) |
| | **Relative Humidity** | 10% to 80% |
| | **Maximum Wet Bulb Temperature** | 84° F (29° C) |
| **Operating Systems Supported** | Windows 11, Windows 10, Windows 8.1, Windows 7 Professional 64-bit<br>Red Hat® Enterprise Linux® (RHEL) 8, 9 Desktop/Workstation<br>SUSE Linux® Enterprise Desktop 15<br>Ubuntu 20.04, 22.04 LTS<br><br>No driver is required for this device. Native support is provided by the operating system. | |
| **Kit Contents** | 9.5mm Slim DVD-ROM Drive, 5.25"" ODD Bay adapter/carrier, slim SATA data/power cable, installation guide | |

**NOTE:** Actual speeds may vary. No support for DVD-RAM (DVD Writer). Does not permit copying of commercially available DVD movies or other copyright protected materials. Intended for creation and storage of your original material and other lawful uses. Double Layer discs can store more data than single layer discs. However, double-layer discs burned with this drive may not be compatible with many existing single-layer DVD drives and players.

## NETWORKING AND COMMUNICATIONS

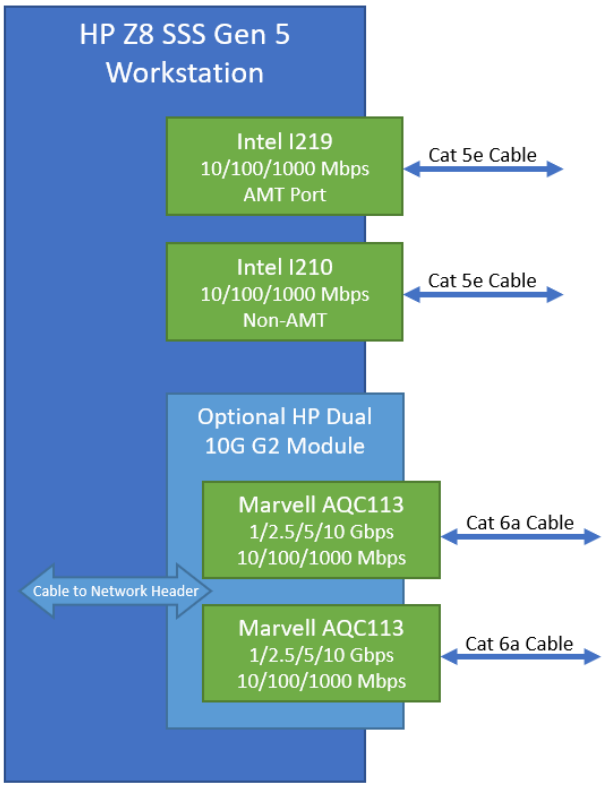


| | | |
|---|---|---|
| **Integrated Intel® I219LM PCIe GbE Controller (Intel® vPro® with Intel® AMT 16.01)** | **Connector** | RJ-45 |
| | **Cabling** | Twisted pair up to 100m |
| | **Controller** | Intel® I219LM GbE platform LAN connect networking controller |
| | **Memory** | 3 KB Tx and 3KB Rx FIFO packet buffer memory |
| | **Data Rates Supported** | 10/100/1000Mbps |
| | **Compliance** | IEEE 802.3x, 802.3az, 802.1as/1588, 802.1p, 802.1Q, 802.3, 802.3ab, 802.3i, 802.3u, 802.3z |
| | **Bus Architecture** | PCI Express and SMBus |
| | **Data Transfer Mode** | PCIe-based interface for active state operation (S0 state) and SMBus for host and management traffic (Sx low power state) |
| | **Power Requirements** | 0.5 Watts Max |
| | **Boot ROM Support** | Yes |
| | **Network Transfer Mode** | Full-duplex; Half-duplex |
| | **Network Transfer Rate** | 0BASE-T (half-duplex) 10 Mbps<br>10BASE-T (full-duplex) 20 Mbps<br>100BASE-TX (half-duplex) 100 Mbps<br>100BASE-TX (full-duplex) 200 Mbps<br>1000BASE-T (full-duplex) 2000 Mbps |
| | **Management Capabilities** | vPro®, WOL, auto MDI crossover, PXE, Muti-port teaming, RSS, ACPI, |

| | | |
|---|---|---|
| | | Advanced cable diagnostic, loopback modes, AMT 16.0 support, Circuit Breaker, VLAN, Multicast Listener Discovery (MLD) |
| | | [1]Requires activation and a system with a corporate network connection, an Intel® AMT enabled chipset, and network hardware and software. For notebooks, Intel AMT may be unavailable or limited over a host OS-based VPN, when connecting wirelessly, on battery power, sleeping, hibernating, or powered off. Results dependent upon hardware, setup, and configuration. For more information, visit: https://www.intel.com/content/www/us/en/architecture-and-technology/intel-active-managementtechnology.<br>html |

| | | |
|---|---|---|
| **I210 (integrated)** | **Connector** | RJ-45 |
| | **Cabling** | Up to 100m with Cat 5e or better |
| | **Controller** | Intel I210 |
| | **Memory** | N/A |
| | **Data Rates Supported** | 10/100/1000Mbps |
| | **Compliance** | IEEE 802.3az, 802.3u, 802.3z, 802.3ab, 802.1AS/1588, 802.1Qav |
| | **Bus Architecture** | PCIe |
| | **Data Transfer Mode** | BASE-T |
| | **Power Requirements** | N/A |
| | **Network Transfer Mode** | BASE-T |
| | **Network Transfer Rate** | 10/100/1000Mbps |
| | **Management Capabilities** | Wake-on-LAN, PXE, UEFI |
| | **Kit Contents** | Integrated into system |

| | | |
|---|---|---|
| **NVIDIA® Mellanox® ConnectX-6 DX Dual Port 10/25GbE SFP28 NIC** | **Connector** | 2 x SFP28 Transceiver Cage (Dual Port)* |
| | **Cabling** | Depends on transceiver pairing. Typically OM4 or higher MMF LC fiber optic cabling with LC SFP28 Transceivers. |
| | **Controller** | ConnectX6-DX |
| | **Memory** | 256Mbit SPI Quad Flash Device |
| | **Data Rates Supported** | 1/10/25GbE |
| | **Compliance** | – IEEE 802.3by 25 Gigabit Ethernet<br>– IEEE 802.3ae 10 Gigabit Ethernet<br>– IEEE 802.3ap based auto-negotiation and KR startup<br>– IEEE 802.3ad, 802.1AX Link Aggregation<br>– IEEE 802.1Q, 802.1P VLAN tags and priority<br>– IEEE 802.1Qau (QCN)<br>– Congestion Notification<br>– IEEE 802.1Qaz (ETS)<br>– IEEE 802.1Qbb (PFC)<br>– IEEE 802.1Qbg<br>– IEEE 1588v2<br>– Jumbo frame support (9.6KB)<br>– Safety: CB/cTUVus/CE<br>– EMC: CE/FCC/VCCI/RCM<br>– RoHS Compliant<br>– KCC<br>– CAN ICES-3 (B)<br>– NM EN 55035/55032 (Morocco) |

## Technical Specifications - Networking and Communications

| | | |
|---|---|---|
| | | – UKCA |
| | **Bus Architecture** | PCIe Gen 4 x8 |
| | **Data Transfer Mode** | PCI Express - stores and accesses Ethernet fabric connection information and packet data |
| | **Power Requirements** | 11.5 Watts (typical) |
| | **Network Transfer Rate** | 1Gbps, 10Gbps, 25Gbps<br><br>**NOTE:** Network Transfer Rate depends on transceiver model.* |
| | **Kit Contents** | NVIDIA® Mellanox® ConnectX-6 DX Dual Port 10/25GbE SFP28 NIC |
| **HP Dual Port 10GBase-T NIC Module G2** | **Networking Interface** | 2 RJ-45 |
| | **System Interface** | Cabled from Dedicated Rear I/O Slot |
| | **Networking Speeds Supported** | 10Gbps, 5Gbps, 2.5Gbps,1Gbps, 100Mbps, 10Mbps |
| | **Cabling (up to 100m)** | Cat5e (or higher) for 1Gbps<br>Cat6a (or higher) for 10Gbps |
| | **Power Consumption (active-typical)** | 5.5W at 1Gbps<br>11.2W at 10Gbps |
| | **Physical Dimensions** | 0.875 in x 3 in x 2.75 in |
| | **Connect Speed LED Indicators** | Link/Activity LED<br>• Off = No link<br>• Blinking = Activity<br>Speed LED<br>• Amber = 1Gbps<br>• Green = 10Gbps |
| | **Operating Temperature** | 0 °C to 55 °C (32 °F to 131 °F) |
| **Intel® X550 10GBASE-T Dual Port NIC** | **Connector** | 2 x RJ-45 |
| | **Cabling** | Cat5 (or higher) for 100Mbps<br>Cat5e (or higher) for 1Gbps, 2.5Gbps, or 5Gbps<br>Cat6 (or higher) for 10Gbps up to 55m<br>Cat6a (or higher) for 10Gbps up to 100m |
| | **Controller** | Intel X550-AT2 |
| | **Memory** | Jumbo Frames up to 15.5KB, 64 Tx and 64Rx Queues per port, 160KB/port of programmable memory transmit buffers |
| | **Data Rates Supported** | 100Mbps (BASE-TX), 1Gbps (BASE-T, 2.5Gbps, 5Gbps, 10Gbps |
| | **Compliance** | 802.1q (VLAN), 802.1Qbb, 802.1p, 802.1Qaz |
| | **Bus Architecture** | PCIe 3x4 |
| | **Data Transfer Mode** | PCIe Gen 3 x4 based interface |
| | **Power Requirements** | 3.9W at 100Mbps<br>5.5W at 1Gbps<br>11.2W at 10Gbps |
| | **Boot ROM Support** | Yes |
| | **Network Transfer Mode** | Auto negotiation between 1GbE, 2.5GbE, 5GbE and 10GbE |

## Technical Specifications - Networking and Communications

| | | |
|---|---|---|
| | **Management Capabilities** | DMI 2.0 Support, Windows Management Instrumentation (WMI) and SNMP, PXE 2.0 through boot ROM, Multi-mode I/O Virtualization, VxLAN, VMDq, VLAN support with VLAN tag insertion |
| | **Kit Contents** | Intel® X550 10GBASE-T Dual Port NIC |
| **Intel® I225-T1 Single Port 2.5GbE PCIe NIC** | **Connector** | RJ-45 (Single Port) |
| | **Cabling** | Cat5e (or better) up to 100m |
| | **Controller** | Intel® Ethernet I225 Controller |
| | **Memory** | Jumbo Frames up to 9.5KB, 4 Tx and Rx Queues, |
| | **Data Rates Supported** | 2.5GbE, 1GbE, 100MbE, 10MbE |
| | **Compliance** | IEEE 802.3 auto negotiation, 802.3x, 802.3z |
| | **Bus Architecture** | PCIe Gen 3.1x1 |
| | **Data Transfer Mode** | PCIe-based interface for active state operation |
| | **Power Requirements** | 1.9 Watts (typical) |
| | **Management Capabilities** | WOL, PXE 2.1, Power Management Protocol Offload (proxying), MAC Power Management, Active State Power Management, |
| | **Kit Contents** | Intel® I225-T1 1-Port 2.5GbE NIC with standard height bracket attached and Low-profile bracket included<br>Product Literature |
| **Intel® Ethernet I350-T4V2 4-Port 1Gb NIC** | **Connector** | 4x RJ-45 (Quad Port) |
| | **Cabling** | Cat3 (or higher) for 10Mbps<br>Cat5 (or higher) for 100Mbps<br>Cat5e (or higher) for 1Gbps up to 100m |
| | **Controller** | Intel® I350 |
| | **Memory** | Jumbo Frames up to 9.5KB, 8 Tx/Rx Queue pairs per port, Main Internal memory is Error Code Correcting |
| | **Data Rates Supported** | 10Mbps, 100Mbps, 1Gbps |
| | **Compliance** | IEEE 802.3 auto negotiation, 802.3, 802.3u, 802.3ab, 802.3x, 802.3z, IEEE1588 protocol and 802.1AS implementation, 802.3az EEE |
| | **Bus Architecture** | PCI Express 2.1 x4 |
| | **Data Transfer Mode** | PCIe-based interface for active state operation |
| | **Power Requirements** | 5W |
| | **Network Transfer Mode** | Multi-speed, full, and half-duplex |
| | **Network Transfer Rate** | 10BASE-T<br>100BASE-Tx<br>1000BASE-T |
| | **Management Capabilities** | WOL, PXE 2.1, UEFI, Power Management Protocol Offload (proxying), MAC Power Management, Active State Power Management, VLAN, ACPI |
| | **Kit Contents** | Intel® Ethernet I350-T4V2 4-Port 1Gb NIC with full-height bracket installed<br>Low-profile bracket included |
| **Allied Telesis AT-2911T/2-901 Dual Port 1GbE NIC** | **Connector** | 2 x RJ-45 (Dual Port) |
| | **Cabling** | Cat3 (or higher) for 10Mbps<br>Cat5 (or higher) for 100Mbps |

## Technical Specifications - Networking and Communications

| | | |
|---|---|---|
| | | Cat5e (or higher) for 1Gbps up to 100m |
| | **Memory** | 17 Rx and 16 Tx queues |
| | **Data Rates Supported** | 10/100/1000 Mbps |
| | **Compliance** | IEEE 802.1p (Quality of Service), IEEE 802.1Q (VLANs), IEEE 802.2 (LLC), IEEE 802.3ac (MAC), IEEE 802.3x (Flow control auto-negotiation), IEEE 802.3z (1000 Base-X), IEEE 802.3ad (Link aggregation), IEEE 802.3ab (10/100/1000T)<br>RoHS, UL, FCC/EN55022 Class A, TUV, EN55024, CE, C-TICK, VCCI |
| | **Bus Architecture** | PCIe 2x1 |
| | **Data Transfer Mode** | PCIe-based interface |
| | **Power Requirements** | 2.4 Watts (typical) |
| | **Management Capabilities** | VLAN support, Link aggregation LACP, Link aggregation smart switch, Failover, Smart Load Balancing (SLB), iSCSI boot support, Windows Management Instrumentation (WMI), PXE 2.1, SNMP |
| | **Kit Contents** | Allied Telesis AT-2911T/2-901 Dual Port 1GbE NIC with low-profile bracket attached and standard bracket included |
| **Allied Telesis AT-2914SX/LC 1GbE LC Fiber NIC** | **Connector** | LC Fiber (Single Port) |
| | **Cabling** | 50/125 µm (core/cladding) multimode fiber optic cable up to 500m<br>62.5/125 µm (core/cladding) multimode fiber optic cable up to 220m |
| | **Memory** | Jumbo Frames up to 9.6KB |
| | **Data Rates Supported** | 1000SX (1GbE Fiber at 850nm Wavelength) |
| | **Compliance** | IEEE 802.1p (Quality of Service), IEEE 802.1Q (VLANs), IEEE 802.2 (LLC), IEEE 802.3ac (MAC), IEEE 802.3x (Flow control auto-negotiation), IEEE 802.3z (1000 Base-X), IEEE 802.3ad (Link aggregation)<br>RoHS, UL, FCC/EN55022 Class A, TUV, EN55024, CE, C-TICK, VCCI |
| | **Bus Architecture** | PCIe x1 |
| | **Data Transfer Mode** | PCIe-based interface |
| | **Power Requirements** | 1.5 Watts (typical) |
| | **Network Transfer Rate** | 1000SX only (1GbE Fiber at 850nm Wavelength) |
| | **Management Capabilities** | UEFI, Smart Load Balancing and failover, Link aggregation (IEEE802.3ad), Generic trunking (FEC/GEC) / IEEE 802.3ad-draft static, VLAN Support |
| | **Kit Contents** | Allied Telesis AT-2914SX/LC 1GB LC Fiber NIC with low-profile bracket attached and standard height bracket included |
| **Intel® AX210 Wi-Fi 6E non-vPro + Bluetooth® 5.2 wireless card with External Antenna WLAN** | **Connector** | Wireless |
| | **Cabling** | N/A |
| | **Controller** | Intel® AX210 |
| | **Data Rates Supported** | Wi-Fi 6e (2.4GHz/5GHz/6GHz) |
| | **Compliance** | Wi-Fi Alliance* Wi-Fi Alliance CERTIFIED 6, WiFi CERTIFIED a/b/g/n/ac, WMM, WMM-Power Save, WPA2, WPA3, Wi-Fi Direct, and Wi-Fi Agile Multiband<br>IEEE WLAN Standard 802.11-2016, 802.11a, b, d, e, g, h, I, k, n, r, u, v, w, ac, and ax, Bluetooth® 5.2 |
| | **Bus Architecture** | PCIe G3x1 for WLAN, USB3.1G1 for BT |
| | **Management Capabilities** | Authentication Protocols: 802.1X EAP-TLS, EAP-TTLS/MSCHAPv2, PEAPv0 - MSCHAPv2 (EAP-SIM, EAP-AKA, EAP-AKA')<br>Encryption: 128-bit AES-CCMP, 256-bit AES-GCMP |

| | |
|---|---|
| | UEFI |
| **Kit Contents** | Intel® AX210 Wi-Fi 6 + Bluetooth® 5.2 PCIe NIC<br>External Dipole Antenna<br>Installation Instructions |

*Wi-Fi 6E requires a Wi-Fi 6E router, sold separately to function in the 6GHz band. Availability of public wireless access points limited. Wi-Fi 6E is backwards compatible with prior 802.11 specs. And available in countries where Wi-Fi 6E is supported.

| Date of change: | Version History: | | Description of change: |
|---|---|---|---|
| March 1, 2023 | From v1 to v2 | Changed | Optical and Removable Storage, Networking and Communications sections and Changed Format |
| March 30, 2023 | From v2 to v3 | Changed | Image page 1 |
| April 1, 2023 | From v3 to v4 | Changed | Format |
| May 1, 2023 | From v4 to v5 | Changed | Power Supply section |
| May 2, 2023 | From v5 to v6 | Changed | Social and Environmental Responsibility section |
| June 1, 2023 | From v6 to v7 | Changed | Graphics, Storage, Networking and Communications, Social and Environmental Responsibility, Overview sections |
| July 1, 2023 | From v7 to v8 | Added | HP Anyware Remote System Controller section |
| | | Changed | Optical and Removable Storage, Networking and Communications sections |
| August 1, 2023 | From v8 to v9 | Changed | Storage Drives, Social and Environmental Responsibility sections |
| August 1, 2023 | From v9 to v10 | Changed | ENVIRONMENTAL DATA section |
| August 11, 2023 | From v10 to v11 | Changed | Optical and Removable Storage section |
| September 1,2023 | From v11 to v12 | Changed | Overview, NETWORKING AND COMMUNICATIONS, GRAPHICS sections |
| September 25, 2023 | From v12 to v13 | Changed | SOFTWARE AND SECURITY section |
| October 1, 2023 | From v13 to v14 | Changed | Graphics, Input Devices sections |
| November 1, 2023 | From v14 to v15 | Changed | PCIe Solid State Drives, Memory, Multimedia and Audio Devices, Input Devices, Social and Environmental Responsibility sections |
| December 1, 2023 | From v15 to v16 | Changed | Graphics, Other Hardware, Social and Environmental Responsibility sections |
| January 1, 2024 | From v16 to v17 | Changed | PCIe Solid State Drives, Graphics sections |
| February 1, 2024 | From v17 to v18 | Changed | STORAGE/HARD DRIVES, Graphics, Social and Environmental Responsibility sections |
| March 1, 2024 | From v18 to v19 | Changed | Graphics section |
| April 1, 2024 | From v19 to v20 | Changed | HP Remote System Controller, Certification and Compliance sections |
| April 24, 2024 | From v20 to v21 | Changed | Processors section |
| May 1, 2024 | From v21 to v22 | Changed | Graphics, Social and Environmental Responsibility sections |
| June 1, 2024 | From v22 to v23 | Changed | Storage section |
| June 12, 2024 | From v23 to v24 | Changed | Software section |
| August 1, 2024 | From v24 to v25 | Changed | Graphics, Memory sections |
| September 2, 2024 | From v25 to v26 | Changed | Processors, NETWORKING AND COMMUNICATIONS sections |

**s**

© 2024 HP Development Company, L.P. The information contained herein is subject to change without notice. The only warranties for HP products and services are set forth in the express warranty statements accompanying such products and services. Nothing herein should be construed as constituting an additional warranty. HP shall not be liable for technical or editorial errors or omissions contained herein. Intel, Intel Core, Xeon, Pentium, Thunderbolt and vPro are trademarks of Intel Corporation in the U.S. and other countries. Microsoft and Windows are either registered trademarks or trademarks of Microsoft Corporation in the United States and/or other countries. AMD is a trademark of Advanced Micro Devices, Inc. ENERGY STAR® is a registered trademark owned by the U.S. government. Linux® is the registered trademark of Linus Torvalds in the U.S. and other countries. NVIDIA, NVS and Quadro and the NVIDIA logo are trademarks and/or registered trademarks of NVIDIA Corporation in the U.S. and other countries. Red Hat® is a registered trademark of Red Hat, Inc. in the United States and other countries. SD is a trademark or registered trademark of SD-3C in the United States, other countries or both. Bluetooth is a trademark of its proprietor used by HP Inc. under license.