Let's Get Started

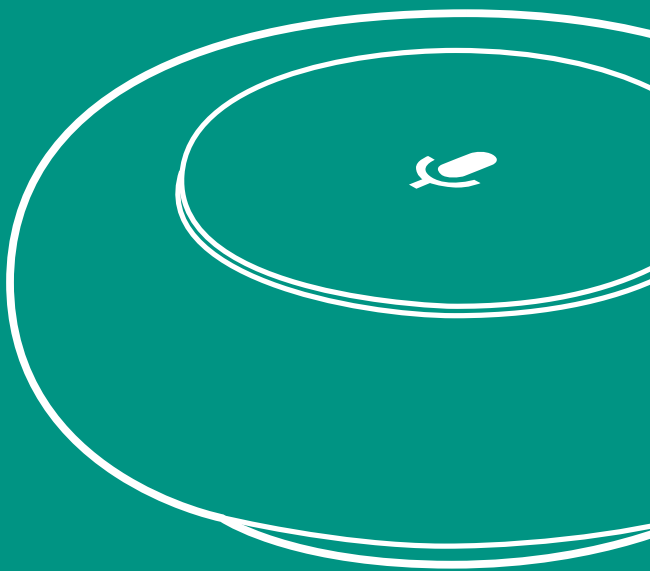

Google Meet | Lenovo

Voyager Booklet Mechanical_01b.indd 1 8/6/20 5:57 PM

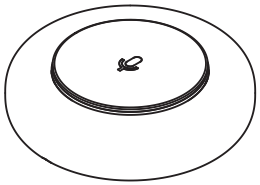

1x

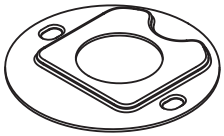

1x

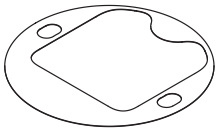

1x



2x

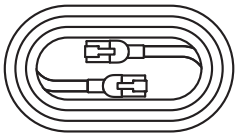

1x

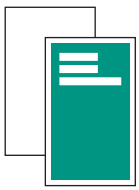

1

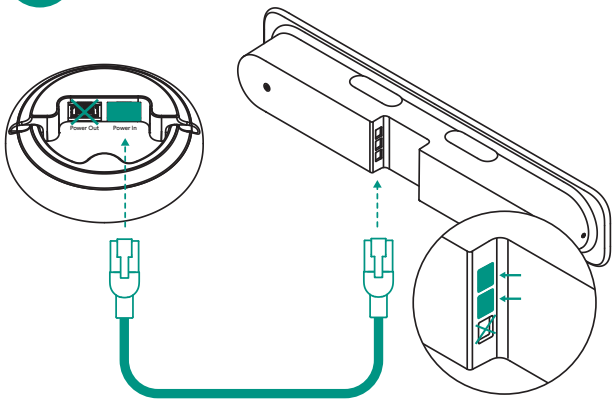

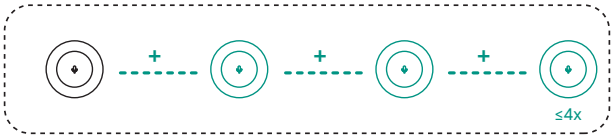

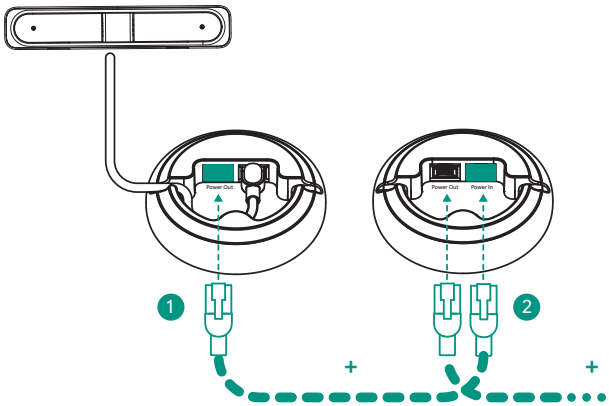

2

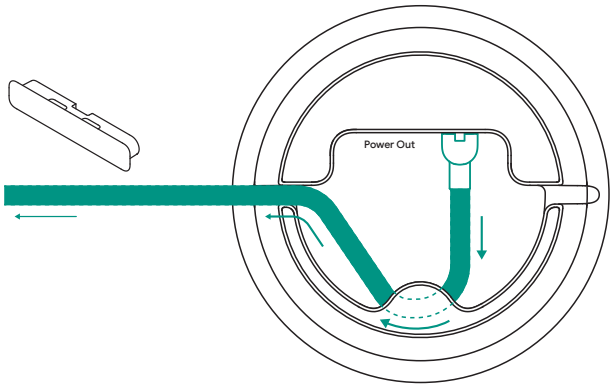

2

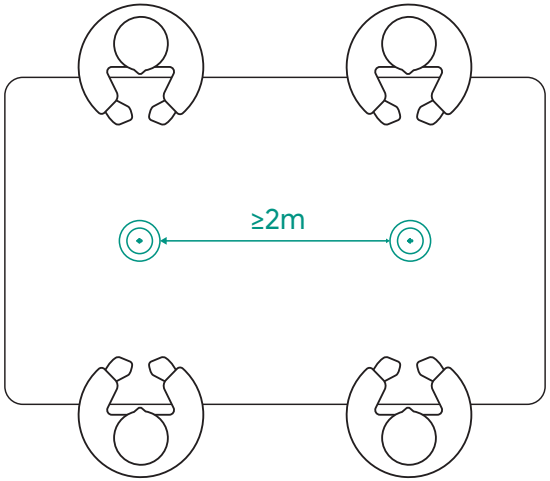

Voyager Booklet Mechanical_01b.indd 4-5
8/6/20 5:57 PM

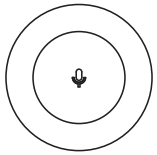

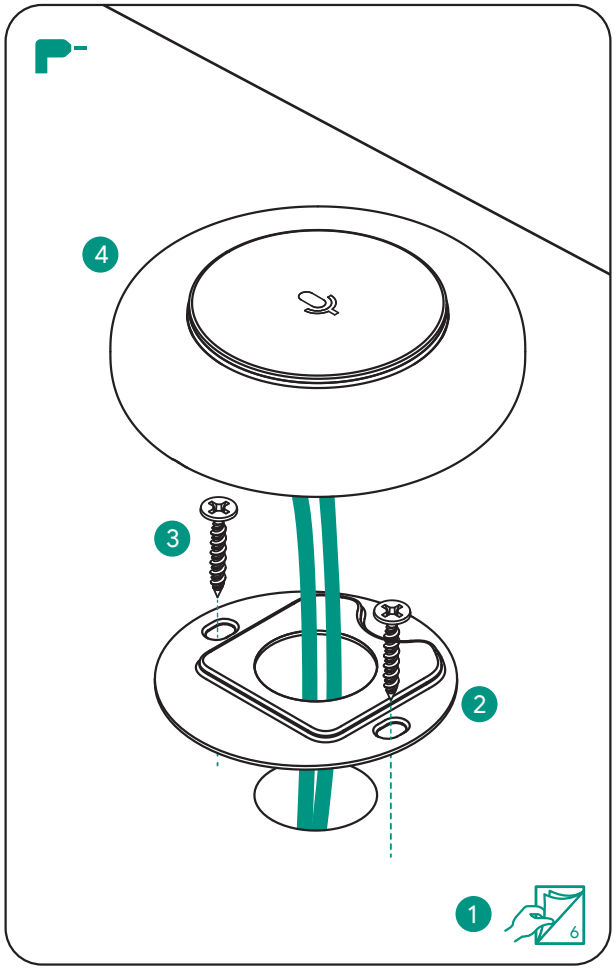

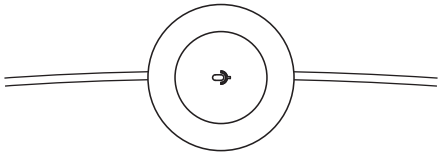

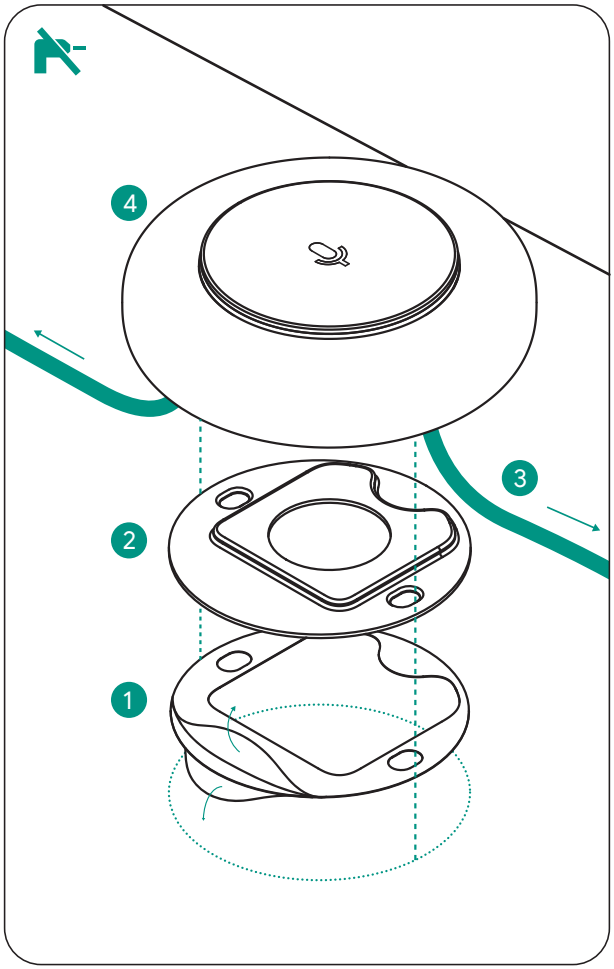

Voyager Booklet Mechanical_01b.indd 6-7 8/6/20 5:57 PM

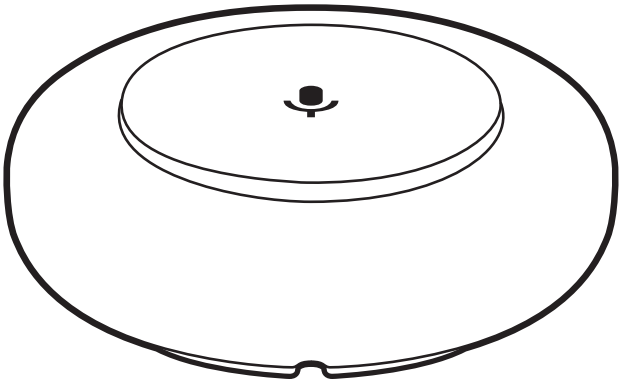

hardware.meet/start

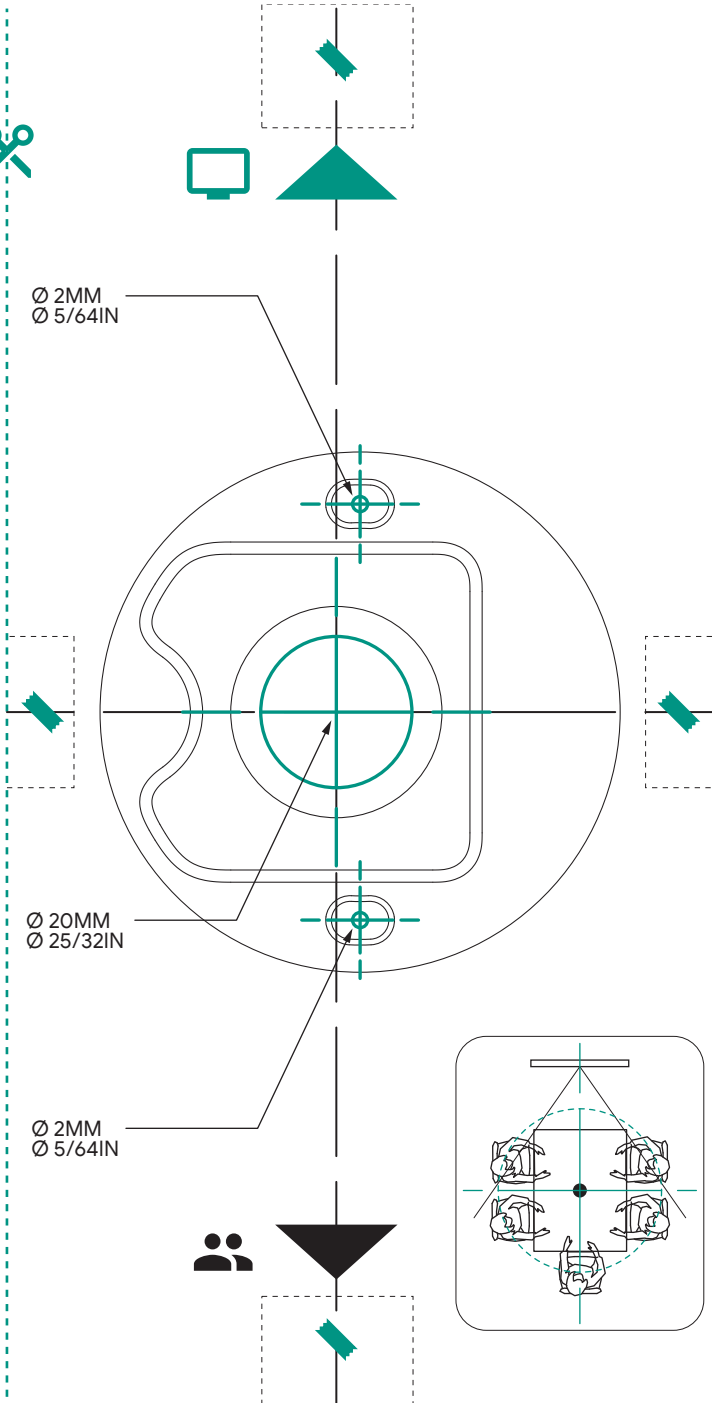










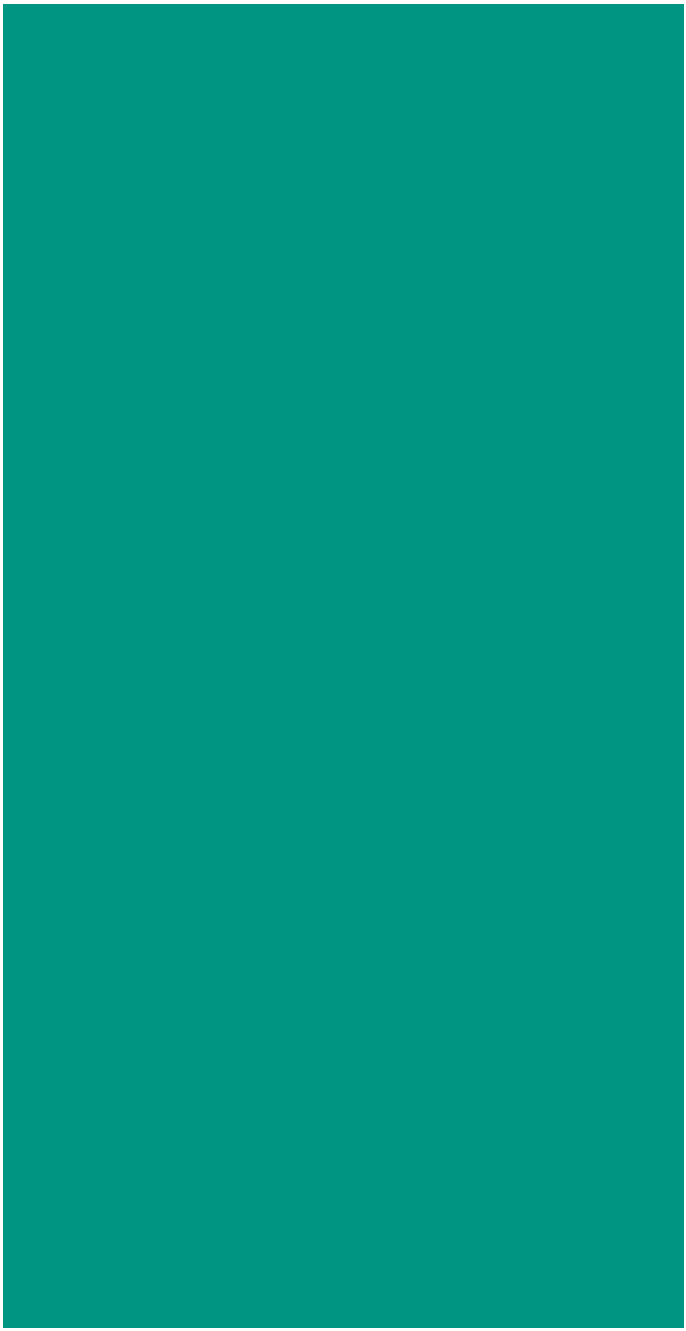

Voyager Booklet Mechanical_01b.indd 12 8/6/20 5:57 PM