Maintenance and Service Guide

SUMMARY

This guide provides maintenance information about such topics as spare parts, removal and replacement of parts, security, and backing up.

Legal information

© Copyright 2023 HP Development Company, L.P.

AMD, Ryzen, and Radeon are trademarks of Advanced Micro Devices, Inc. Bluetooth is a trademark owned by its proprietor and used by HP Inc. under license. Intel and Thunderbolt are trademarks of Intel Corporation or its subsidiaries in the U.S. and/or other countries. MediaTek is a trademark of MediaTek Inc. Microsoft and Windows are either registered trademarks or trademarks of Microsoft Corporation in the United States and/or other countries. Realtek is a trademark of Realtek Semiconductor Corporation. The microSD Logo and microSD are trademarks of SD-3C LLC. USB Type-C and USB-C are registered trademarks of USB Implementers Forum. DisplayPort™ and the DisplayPort™ logo are trademarks owned by the Video Electronics Standards Association (VESA®) in the United States and other countries. Miracast is a registered trademark of Wi-Fi Alliance.

The information contained herein is subject to change without notice. The only warranties for HP products and services are set forth in the express warranty statements accompanying such products and services. Nothing herein should be construed as constituting an additional warranty. HP shall not be liable for technical or editorial errors or omissions contained herein.

First Edition: March 2023

Document Part Number: N37115-001

Product notice

This guide describes features that are common to most models. Some features may not be available on your computer.

Not all features are available in all editions or versions of Windows. Systems may require upgraded and/or separately purchased hardware, drivers, software or BIOS update to take full advantage of Windows functionality. Windows is automatically updated, which is always enabled. High-speed internet and Microsoft account required. ISP fees may apply and additional requirements may apply over time for updates. See http://www.windows.com. **If your product ships with Windows in S Mode:** Windows in S Mode works exclusively with apps from the Microsoft Store within Windows. Certain default settings, features, and apps cannot be changed. Some accessories and apps that are compatible with Windows may not work (including some antivirus, PDF writers, driver utilities, and accessibility apps), and performance may vary, even if you switch out of S Mode. If you switch to Windows, you cannot switch back to S Mode. Learn more at Windows.com/SmodeFAQ.

To access the latest user guides, go to http://www.hp.com/support, and follow the instructions to find your product. Then select **Manuals**.

Software terms

By installing, copying, downloading, or otherwise using any software product preinstalled on this computer, you agree to be bound by the terms of the HP End User License Agreement (EULA). If you do not accept these license terms, your sole remedy is to return the entire unused product (hardware and software) within 14 days for a full refund subject to the refund policy of your seller.

For any further information or to request a full refund of the price of the computer, please contact your seller.

Safety warning notice

Reduce the possibility of heat-related injuries or of overheating the computer by following the practices described.

⚠ **WARNING!** To reduce the possibility of heat-related injuries or of overheating the computer, do not place the computer directly on your lap or obstruct the computer air vents. Use the computer only on a hard, flat surface. Do not allow another hard surface, such as an adjoining optional printer, or a soft surface, such as pillows or rugs or clothing, to block airflow. Also, do not allow the AC adapter to come into contact with the skin or a soft surface, such as pillows or rugs or clothing, during operation. The computer and the AC adapter comply with the user-accessible surface temperature limits defined by applicable safety standards.

Important notice about Customer Self-Repair parts

Your computer includes Customer Self-Repair parts and parts that should be accessed by only an authorized service provider.

IMPORTANT: See "Removal and replacement procedures for Customer Self-Repair parts" for details.

Accessing parts described in "Removal and replacement procedures for authorized service provider parts" can damage the computer or void your warranty.

Table of contents

1 Product description 1

2 Components 6

Right 6

Left 7

Display 8

Low blue light mode (select products only) 8

Keyboard area 10

Touchpad 10

Touchpad settings 10

Adjusting touchpad settings 10

Turning on the touchpad 10

Touchpad components 10

Lights 11

Buttons, speakers, and fingerprint reader 12

Special keys 14

Bottom 15

Rear 16

Labels 16

Using a SIM card (select products only) 18

Determining the correct SIM card size for your computer 18

Inserting a SIM card in an external slot 18

3 Illustrated parts catalog 19

Computer major components 19

Display assembly subcomponents 22

Cable Kit 24

Miscellaneous parts 25

4 Removal and replacement procedures preliminary requirements 30

Tools required 30

Service considerations 30

Plastic parts 30

Cables and connectors 30

Drive handling 30

Electrostatic discharge information 31

Generating static electricity 31

Preventing electrostatic damage to equipment 32

Personal grounding methods and equipment 32

Grounding the work area 33

Recommended materials and equipment 33
Cleaning your computer 34
Enabling HP Easy Clean (select products only) 34
Removing dirt and debris from your computer 34
Cleaning your computer with a disinfectant 35
Caring for wood veneer (select products only) 36
Packaging and transporting guidelines 36
Accessing support information 37
5 Removal and replacement procedures for Customer Self-Repair parts 39
Component replacement procedures 39
Preparation for disassembly 39
Bottom cover 39
Using a SIM card (select products only) 40
Determining the correct SIM card size for your computer 41
Inserting a SIM card in an external slot 41
Memory modules 41
WLAN module 43
WWAN module 45
Solid-state drive 46
6 Removal and replacement procedures for authorized service provider parts 49
Component replacement procedures 49
Preparation for disassembly 49
Battery 49
RTC battery 51
I/O board 51
Touchpad 52
NFC module 53
Smart card reader 54
Fan 55
Fingerprint reader board 56
Heat sink 57
System board 58
Speaker 61
Power connector cable 62
Display assembly 63
Top cover with keyboard 72
7 Backing up, restoring, and recovering 73
Backing up information and creating recovery media 73
Using Windows tools for backing up 73
Using the HP Cloud Recovery Download Tool to create recovery media (select products only) 73
Restoring and recovering your system 73
Creating a system restore 74
Restoring and recovery methods 74
Recovering using HP Recovery media 74
Changing the computer boot order 75

Using HP Sure Recover (select products only) 75

8 Computer Setup (BIOS), TPM, and HP Sure Start 76

Using Computer Setup 76
Navigating and selecting in Computer Setup 76
Restoring factory settings in Computer Setup 76
Updating the BIOS 77
Determining the BIOS version 77
Preparing for a BIOS update 77
Downloading a BIOS update 78
Installing a BIOS update 78
Changing the boot order using the f9 prompt 78

TPM BIOS settings (select products only) 79

Using HP Sure Start (select products only) 79

9 Using HP PC Hardware Diagnostics 80

Using HP PC Hardware Diagnostics Windows (select products only) 80
Using an HP PC Hardware Diagnostics Windows hardware failure ID code 80
Accessing HP PC Hardware Diagnostics Windows 80
Accessing HP PC Hardware Diagnostics Windows from HP Support Assistant 80
Accessing HP PC Hardware Diagnostics Windows from the Start menu (select products only) 81
Downloading HP PC Hardware Diagnostics Windows 81
Downloading the latest HP PC Hardware Diagnostics Windows version from HP 81
Downloading the HP PC Hardware Diagnostics Windows from the Microsoft Store 81
Downloading HP Hardware Diagnostics Windows by product name or number (select products only) 81
Installing HP PC Hardware Diagnostics Windows 82

Using HP PC Hardware Diagnostics UEFI 82
Using an HP PC Hardware Diagnostics UEFI hardware failure ID code 82
Starting HP PC Hardware Diagnostics UEFI 82
Starting HP PC Hardware Diagnostics UEFI through HP Hotkey Support software (select products only) 83
Downloading HP PC Hardware Diagnostics UEFI to a USB flash drive 83
Downloading the latest HP PC Hardware Diagnostics UEFI version 83
Downloading HP PC Hardware Diagnostics UEFI by product name or number (select products only) 83

Using Remote HP PC Hardware Diagnostics UEFI settings (select products only) 84
Downloading Remote HP PC Hardware Diagnostics UEFI 84
Downloading the latest Remote HP PC Hardware Diagnostics UEFI version 84
Downloading Remote HP PC Hardware Diagnostics UEFI by product name or number 84
Customizing Remote HP PC Hardware Diagnostics UEFI settings 84

10 Specifications 86

Computer specifications 86

Display specifications 86

Solid-state drive specifications 87

11 Statement of memory volatility 88

Current BIOS steps 88
Nonvolatile memory usage 90
Questions and answers 90
Using HP Sure Start (select products only) 92
12 Power cord set requirements 93
Requirements for all countries 93
Requirements for specific countries and regions 93
13 Recycling 95
Index 96

1 Product description

This table provides detailed product information.

Table 1-1 **Product components and their descriptions**

Category	Description
Product Name	**HP EliteBook 645 G10 Notebook PC**
Processors	**AMD® processors**
	AMD Ryzen™ 7 7730U (2.0 GHz base frequency, 16 MB cache, 8 cores, 15 W)
	AMD Ryzen 7 PRO 7730U (2.0 GHz base frequency, 16 MB cache, 8 cores, 15 W)
	AMD Ryzen 5 7530U (2.0 GHz base frequency, 16 MB cache, 6 cores, 15 W)
	AMD Ryzen 5 PRO 7530U (2.0 GHz base frequency, 16 MB cache, 6 cores, 15 W)
	AMD Ryzen 3 7330U (2.3 GHz base frequency, 8 MB cache, 4 cores, 15 W)
Graphics	**Internal graphics**
	AMD Radeon™ Graphics
Display	**35.6 cm (14.0 in), full high definition (FHD) (1920 × 1080), wide dynamic range (WDR), narrow bezel, UWVA, antiglare, bent, camera privacy cover**
	250 nits, 45% CG, eDP 1.2 without PSR, no camera, nontouch
	250 nits, 45% CG, eDP 1.4 without PSR, no microphone, nontouch
	250 nits, 45% CG, eDP 1.4 without PSR, no microphone, WWAN, nontouch
	250 nits, 45% CG, eDP 1.2 without PSR, HD camera, touch or non nontouch
	250 nits, 45% CG, eDP 1.2 without PSR, HD camera, WWAN, nontouch
	250 nits, 45% CG, eDP 1.2 without PSR, HD + IR camera, WWAN, nontouch
	250 nits, 45% CG, eDP 1.2 without PSR, 5 MP HD + IR camera, nontouch
	400 nits, sRGB 100, eDP, low blue light, 5 MP HD + IR camera
	400 nits, sRGB 100, eDP 1.3 + PSR, low blue light, HD + IR camera
	1000 nits, sRGB 100, eDP, low blue light, 5 MP HD + IR camera
	35.6 cm (14.0 in), high definition (HD) (1366 × 768), narrow bezel, SVA, antiglare, bent, eDP 1.2 without PSR, 250 nits
	No camera
	HD camera

Table 1-1 Product components and their descriptions (continued)

Category	Description
Memory	Two customer-accessible (by IT or self-maintainers only) memory module slots supporting up to 32 GB of RAM
	DDR4-3200 dual-channel support
	Supports the following configurations:
	• 64 GB (32 × 2)
	• 32 GB (16 × 2 or 32 × 1)
	• 16 GB (8 × 2) or (16 × 1)
	• 8 GB (8 × 1 or 4 × 2)
Primary storage	**Solid-state drives, PCIe, NVMe, M.2 2280**
	2 TB, PCIe-4 × 4, TLC
	1 TB, PCIe-4 × 4, TLC
	1 TB, PCIe-4 × 4, TLC, NMIC
	1 TB, PCIe-4 × 4, TLC, self-encrypted OPAL2
	1 TB, PCIe-4 × 4, TLC, self-encrypted OPAL2, NMIC
	512 GB, PCIe-4 × 4, TLC
	512 GB, PCIe-4 × 4, TLC, self-encrypted OPAL2
	512 GB, PCIe-4 × 4, TLC, self-encrypted OPAL2, NMIC
	512 GB
	256 GB, PCIe-4 × 4, TLC, self-encrypted OPAL2
	256 GB
	Solid-state drives, PCIe, NVMe, M.2 2230
	256 GB (2nd drive)
Audio and video	Camera, HD (select products only)
	Camera, HD + IR (infrared) (select products only)
	Camera, 5 MP + IR (select products only)
	Camera privacy cover
	Stereo speakers (2)
	Microphone (dual array digital)
	Supports WDR (wide dynamic range)

Table 1-1 **Product components and their descriptions (continued)**

Category	Description
RJ-45 (network) jack	Realtek® RTL8111HSH-CG 10/100/1000
	Realtek RTL8111FPH-CG 10/100/1000
	Supports S0 (Working)/S4 (Hibernation)/S5 (Shutdown) via out of band
	Supports S0 MAPT (via in band)
	Supports wake-on LAN (WOL)
	Supports S0ix/S4/S5 wake on LAN (via out of band) using docking station
Wireless	**Wireless Local Area Network (WLAN)** (select products only)
	Mediatek® RZ616 Wi-Fi 6E Bluetooth® 5.3 AIM-T WLAN
	Realtek 8852CE Wi-Fi 6E Bluetooth 5.3 WLAN
	Compatible with Miracast® devices
	Two WLAN antennas
	Supports HP Connection Optimizer
	Supports HP Extended Range Wireless LAN
	Supports WLAN and Bluetooth PLDR
	Wireless Wide Area Network (WWAN) (select products only)
	Intel® XMM 7560 R + LTE-Advanced Pro WWAN (Cat 16)
	Two antennas integrated at top of display
	eSIM support
	LTE CAT16: Fibocom LTE/HSPA + with GPS
	Global Series support
	Near-Field Communication (NFC)
	NFC Mirage WNC XRAV-1 (NXP NPC300 I2C 10 mm × 17 mm)
Ports	HDMI 2.1
	Smart card connector
	Nano SIM slot
	Audio-out (headphone)/audio-in (microphone) combo jack
	(3) USB 3.1 Gen 1 Type-A port
	USB Type-C® port (USB 3.2 Gen 2)
	RJ-45 (network) jack
	AC Smart Pin adapter plug, 4.5 mm
Sensors	Hall sensor
	Ambient light sensor

Table 1-1 Product components and their descriptions (continued)

Category	Description
Keyboard/pointing devices	**Keyboard** (spill resistant)
	Standard, backlit
	Standard, not backlit
	Privacy
	Clickpad
	Firmware PTP
	Microsoft® precision touchpad default gestures support
	No hybrid mode support
Power requirements	**Battery**
	3 cell, 51 Whr, HP Long Life
	3 cell, 42 Whr, HP Long Life
	HP fast charge technology
	Long life
	Smart AC adapters
	65 W, right angle, nPFC, 4.5 mm, 1.8 m (6 ft)
	65 W, right angle, nPFC, 4.5 mm, 1.8 m (6 ft) (LA MERCO)
	65 W, nPFC, 4.5 mm, EM
	65 W, straight, nPFC, USB Type-C, 1.8 m (6 ft)
	45 W, right angle, nPFC, 4.5 mm, 1.8 m (6 ft)
	45 W, right angle, nPFC, 4.5 mm, 1.8 m (6 ft) (LA MERCO)
	45 W, nPFC, C8, 2-prong barrel, 4.5 mm
	45 W, straight, nPFC, USB Type-C, 1.8 m (6 ft)
	Power cord
	C7, 1.0 m (3.3 ft) conventional
	C5, 1.0 m (3.3 ft) conventional
	C5, 1.0 m (3.3 ft), conventional, straight, HF
Security	Fingerprint sensor (select products only)
	Active SmartCard reader (select products only)
	SmartCard Sensor
	Camera privacy cover
	Nano security cable slot
	HP Combination Nano Cable Lock
	HP Essential Combination Nano Cable Lock
	HP Tamper Lock (select products only)

Table 1-1 Product components and their descriptions (continued)

Category	Description
Operating system	Windows® 10 Enterprise 64
	Windows 10 Enterprise 64 LTSC 2109
	Windows 11 Enterprise 64
	Windows 11 Home 64
	Windows 11 Home 64 Advanced
	Windows 11 Home 64 Advanced Single Language
	Windows 11 Home 64 Chinese Market CPPP
	Windows 11 Home 64 High-End Chinese Market CPPP
	Windows 11 Home 64 Plus
	Windows 11 Home 64 Plus Single Language
	Windows 11 Home 64 Plus Single Language Africa Market PPP
	Windows 11 Home 64 Plus Single Language APAC EM PPP
	Windows 11 Home 64 Plus Single Language India Market PPP
	Windows 11 Home 64 Plus Single Language Indonesia Market PPP
	Windows 11 Home 64 Single Language
	Windows 11 Home 64 Single Language Africa Market PPP
	Windows 11 Home 64 Single Language APAC EM PPP
	Windows 11 Home 64 Single Language India Market PPP
	Windows 11 Home 64 Single Language Indonesia Market PPP
	Windows 11 Pro 64
	Windows 11 Pro 64 Chinese Market
	Windows 11 Pro 64 Downgrade Win 10 Pro 64
	Windows 11 Pro 64 Downgrade Win 10 Pro 64 Chinese Market
	Windows 11 Pro 64 Downgrade Win 10 Pro 64 StF MSNA Standard
	Windows 11 Pro 64 StF MSNA Standard
	FreeDOS 3.0
Serviceability	**End user replaceable parts**
	AC adapter

2 Components

Your computer features top-rated components. This chapter provides details about your components, where they are located, and how they work.

Right

Use the illustration and table to identify the components on the right side of the computer.

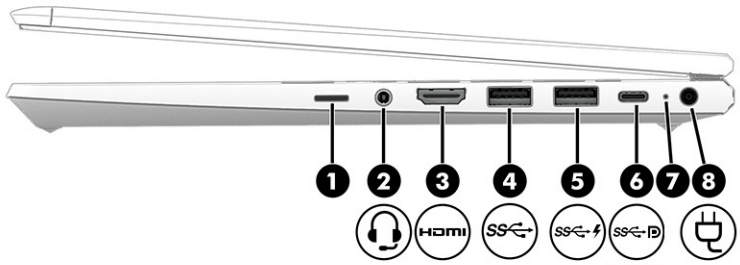

Table 2-1 Right-side components and their descriptions

Component		Description
(1)	SIM card slot (select products only)	Supports a wireless subscriber identity module (SIM) card. For SIM card installation steps, see Using a SIM card (select products only) on page 18.
(2)	Audio-out (headphone)/Audio-in (microphone) combo jack (select products only)	Connects optional powered stereo speakers, headphones, earbuds, a headset, or a television audio cable. Also connects an optional headset microphone. This jack does not support optional standalone microphones. **WARNING!** To reduce the risk of personal injury, adjust the volume before putting on headphones, earbuds, or a headset. For additional safety information, see the *Regulatory, Safety, and Environmental Notices*. To access this guide: ■ Select the **Search** icon in the taskbar, type `HP Documentation` in the search box, and then select **HP Documentation**. **NOTE:** When a device is connected to the jack, the computer speakers are disabled.
(3)	HDMI® port	Connects an optional video or audio device, such as a high-definition television, any compatible digital or audio component, or a high-speed High Definition Multimedia Interface® (HDMI) device.

Table 2-1 Right-side components and their descriptions (continued)

Component		Description
(4)	USB SuperSpeed 5 Gbps port	Connects a USB device, provides high-speed data transfer, and (for select products) charges small devices (such as a smartphone) when the computer is on or in Sleep mode. NOTE: Use a standard USB Type-A charging cable or cable adapter (purchased separately) when charging a small external device.
(5)	USB SuperSpeed 5 Gbps port with HP Sleep and Charge	Connects a USB device, provides high-speed data transfer, and charges small devices (such as a smartphone), even when the computer is off. NOTE: Use a standard USB Type-A charging cable or cable adapter (purchased separately) when charging a small external device.
(6)	USB Type-C power connector port, SuperSpeed 10 Gbps port, and DisplayPort™ output	Connects an AC adapter that has a USB Type-C connector, supplying power to the computer and, if needed, charging the computer battery. – and – Connects a USB device, provides high-speed data transfer, and (for select products) charges small devices (such as a smartphone) when the computer is on or in Sleep mode. NOTE: Use a standard USB Type-C charging cable or cable adapter (purchased separately) when charging a small external device. – and – Connects a display device that has a USB Type-C connector, providing DisplayPort output.
(7)	Battery light	When AC power is connected: • White: The battery charge is greater than 90 percent. • Amber: The battery charge is from 0 to 90 percent. • Off: The battery is not charging. When AC power is disconnected (battery not charging): • Blinking amber: The battery has reached a low battery level. When the battery has reached a critical battery level, the battery light begins blinking rapidly. • Off: The battery is not charging.
(8)	Power connector	Connects an AC adapter.

Left

Use the illustration and table to identify the components on the left side of the computer.

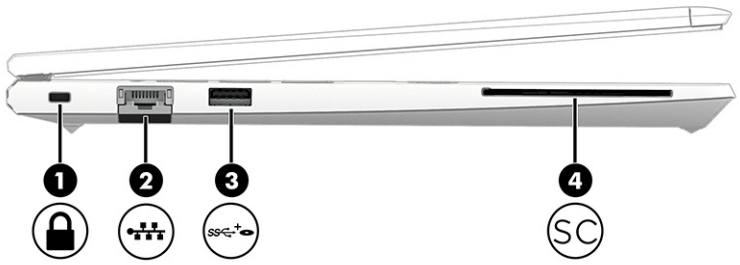

Table 2-2 Left-side components and their descriptions

Component		Description
(1)	Security cable slot	Attaches an optional security cable to the computer. NOTE: The security cable is designed to act as a deterrent, but it might not prevent the computer from being mishandled or stolen.
(2)	RJ-45 (network) jack/status lights	Connects a network cable. • Green (left): The network is connected. • Amber (right): Activity is occurring on the network.
(3)	USB SuperSpeed 5 Gbps powered port	Connects and supplies power to a USB device, provides high-speed data transfer, and (for select products) charges small devices (such as a smartphone) when the computer is on or in Sleep mode. NOTE: Use a standard USB Type-A charging cable or cable adapter (purchased separately) when charging a small external device.
(4)	Smart card reader (select products only)	Supports optional smart cards.

Display

Use the illustration and table to identify the display components.

Low blue light mode (select products only)

Your computer display is shipped from the factory in low blue light mode for improved eye comfort and safety. Also, blue light mode automatically adjusts blue light emissions when you are using the computer at night or for reading.

⚠ WARNING! To reduce the risk of serious injury, read the *Safety & Comfort Guide*. It describes proper workstation setup and proper posture, health, and work habits for computer users. The *Safety & Comfort Guide* also provides important electrical and mechanical safety information. The *Safety & Comfort Guide* is available on the web at http://www.hp.com/ergo.

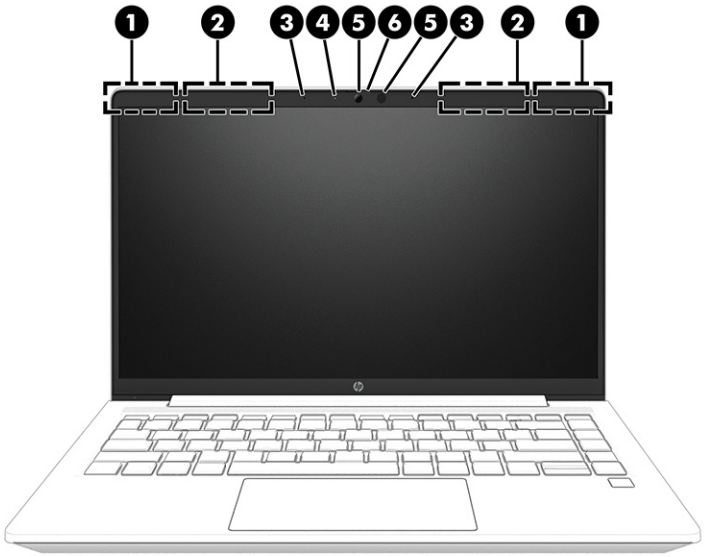

Table 2-3 Display components and their descriptions

Component		Description
(1)	WLAN antennas* (select products only) (2)	Send and receive wireless signals to communicate with wireless local area networks (WLANs).
(2)	WWAN antennas* (select products only) (2)	Send and receive wireless signals to communicate with wireless wide area networks (WWANs).
(3)	Internal microphones (2)	Record sound.
(4)	Camera lights	On: One or more cameras are in use.
(5)	Cameras (2) (select products only)	Allow you to video chat, record video, and record still images. Some cameras also allow a facial recognition logon to Windows, instead of a password logon. **NOTE:** Camera functions vary depending on the camera hardware and software installed on your product.
(6)	Camera privacy cover (select products only)	By default, the camera lens is uncovered, but you can slide the camera privacy cover to block the camera's view. To use the camera, slide the camera privacy cover in the opposite direction to reveal the lens. **NOTE:** If you have both front-facing and rear-facing cameras, when one camera lens is revealed and ready to use, the other is concealed.

*The antennas are not visible from the outside of the computer. For optimal transmission, keep the areas immediately around the antennas free from obstructions.

For wireless regulatory notices, see the section of the *Regulatory, Safety, and Environmental Notices* that applies to your country or region.

To access this guide:

- Select the **Search** icon in the taskbar, type `HP Documentation` in the search box, and then select **HP Documentation**.

Keyboard area

Keyboards can vary by language.

NOTE: The keyboard, including the function keys and power key (select products only), is disabled in stand, tent, and tablet modes. To enable the keyboard, including the power key, change to the clamshell mode.

Touchpad

The touchpad settings and components are described here.

Touchpad settings

You learn how to adjust the touchpad settings and components here.

Adjusting touchpad settings

Use these steps to adjust touchpad settings and gestures.

1. Select the **Search** icon in the taskbar, type `touchpad settings` in the search box, and then press enter.
2. Choose a setting.

Turning on the touchpad

Follow these steps to turn on the touchpad.

1. Select the **Search** icon in the taskbar, type `touchpad settings` in the search box, and then press enter.
2. Using an external mouse, click the **Touchpad** button.

   If you are not using an external mouse, press the Tab key repeatedly until the pointer rests on the **touchpad** button. Then press the spacebar to select the button.

Touchpad components

Use the illustration and table to identify the touchpad components.

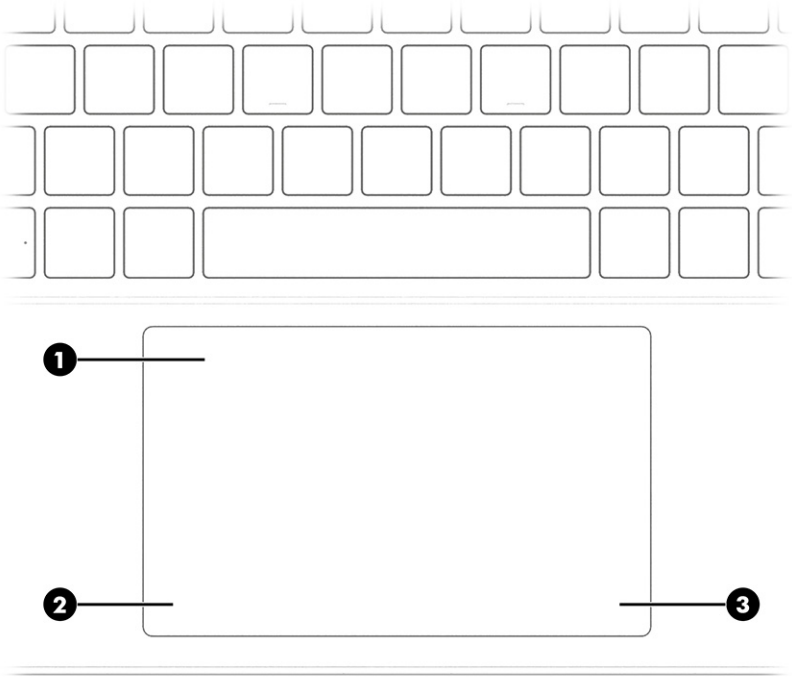

Table 2-4 Touchpad components and their descriptions

Component		Description
(1)	Touchpad zone	Reads your finger gestures to move the pointer or activate items on the screen.
(2)	Left control zone	Textured area that allows you to perform additional gestures.
(3)	Right control zone	Textured area that allows you to perform additional gestures.

Lights

Use the illustration and table to identify the lights on the computer.

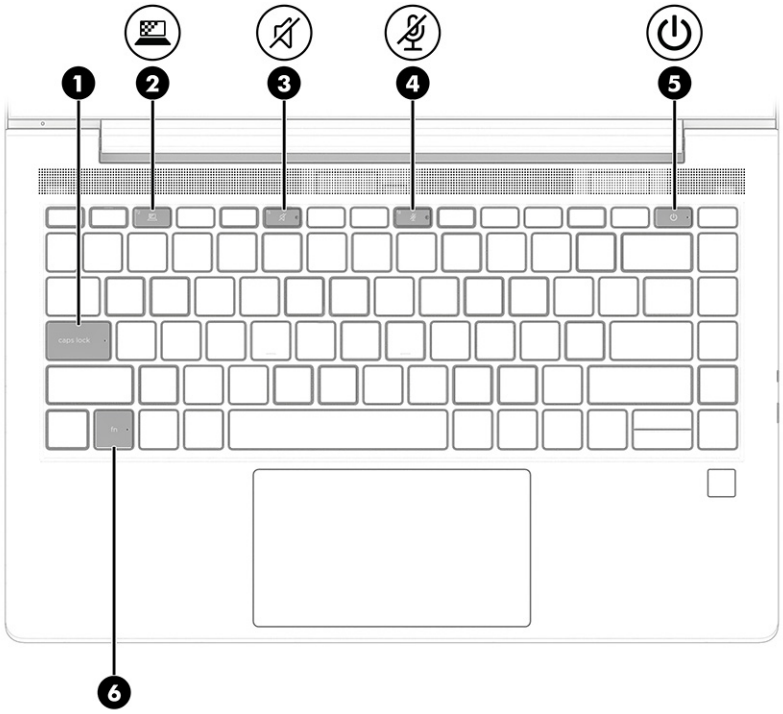

Table 2-5 Lights and their descriptions

Component		Description
(1)	Caps lock light	On: Caps lock is on, which switches the key input to all capital letters.
(2)	Privacy key light	On: Privacy screen is on, which helps prevent side-angle viewing.
(3)	Mute light	• On: Computer sound is off. • Off: Computer sound is on.
(4)	Microphone mute light	• On: Microphone is off. • Off: Microphone is on.
(5)	Power light	• On: The computer is on. • Blinking (select products only): The computer is in the Sleep state, a power-saving state. The computer shuts off power to the display and other unnecessary components. • Off: Depending on your computer model, the computer is off, in Hibernation, or in Sleep. Hibernation is the power-saving state that uses the least amount of power.
(6)	Fn lock light	On: The fn key is locked.

Buttons, speakers, and fingerprint reader

Fingerprint readers can be located on the touchpad, on a side panel of the computer, or on the top cover below the keyboard.

IMPORTANT: To verify that your computer supports fingerprint reader sign-in, select the **Search** icon in the taskbar, type `Sign-in options` in the search box, and then select the **Sign-on options** app. If **Fingerprint recognition** is not listed as an option, then your notebook does not include a fingerprint reader.

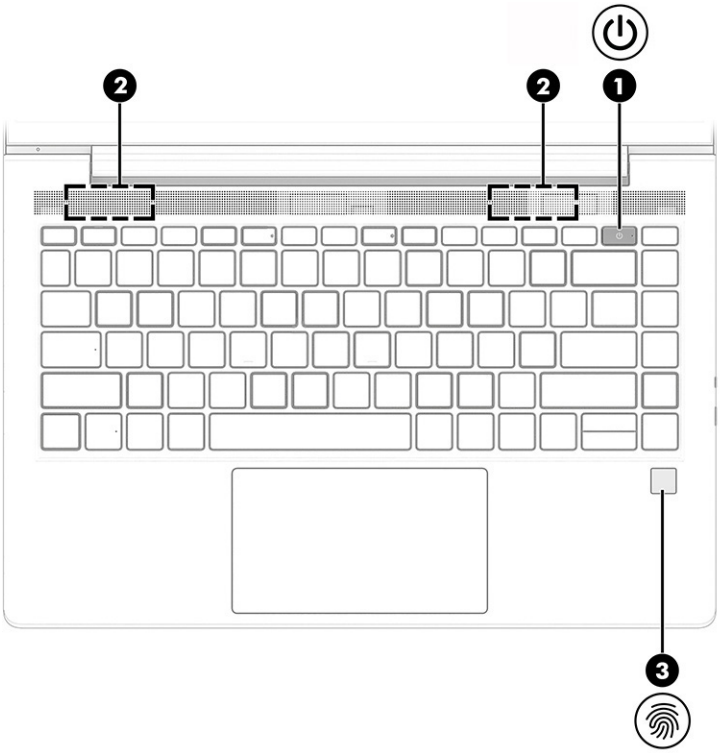

Table 2-6 **Buttons, speakers, and fingerprint reader and their descriptions**

Component		Description
(1)	Power button	• When the computer is off, press the button briefly to turn on the computer. • When the computer is on, press the button briefly to initiate Sleep. • When the computer is in the Sleep state, press the button briefly to exit Sleep (select products only). • When the computer is in Hibernation, press the button briefly to exit Hibernation. IMPORTANT: Pressing and holding down the power button results in the loss of unsaved information. If the computer has stopped responding and shutdown procedures are ineffective, press and hold the power button for at least 4 seconds to turn off the computer. To learn more about your power settings, use the Power icon. • Right-click the **Power** icon, and then select **Power and sleep settings**.
(2)	Speakers	Produce sound.

Table 2-6 Buttons, speakers, and fingerprint reader and their descriptions (continued)

Component		Description
(3)	Fingerprint reader (select products only)	Allows a fingerprint logon to Windows, instead of a password logon. ■ Swipe down across the fingerprint reader. IMPORTANT: To prevent fingerprint logon issues, make sure when you register your fingerprint that all sides of your finger are registered by the fingerprint reader.

Special keys

Use the illustration and table to identify the special keys.

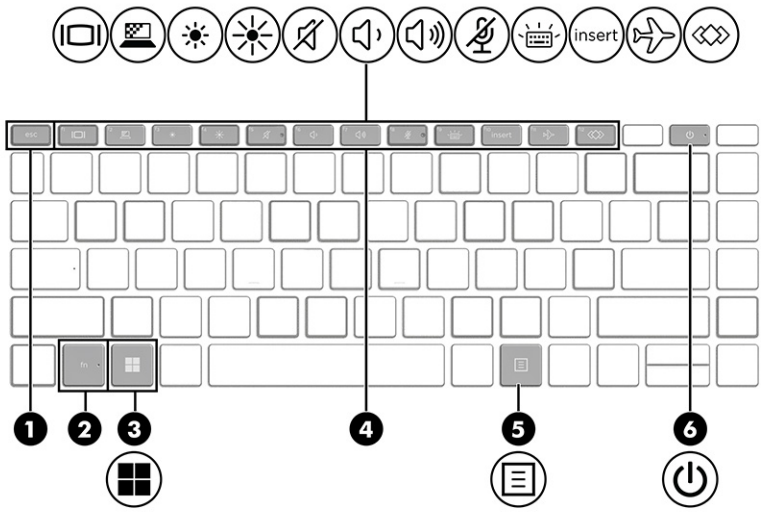

Table 2-7 Special keys and their descriptions

Component		Description
(1)	esc key	Displays system information when pressed in combination with the fn key.
(2)	fn key	Executes frequently used system functions when pressed in combination with another key. Such key combinations are called *hot keys*.
(3)	Windows key	Opens the Start menu. NOTE: Pressing the Windows key again will close the Start menu.
(4)	Action keys	Execute frequently used system functions.
(5)	Windows application key	Displays options for a selected object.

Table 2-7 Special keys and their descriptions (continued)

Component		Description
(6)	Power button	• When the computer is off, press the button briefly to turn on the computer. • When the computer is on, press the button briefly to initiate Sleep. • When the computer is in the Sleep state, press the button briefly to exit Sleep (select products only). • When the computer is in Hibernation, press the button briefly to exit Hibernation. IMPORTANT: Pressing and holding down the power button results in the loss of unsaved information. If the computer has stopped responding and shutdown procedures are ineffective, press and hold the power button for at least 4 seconds to turn off the computer. To learn more about your power settings, use the Power icon. • Right-click the **Power** icon and then, depending on your product, select **Power and sleep settings** or **Power Options**.

Bottom

Use the illustration and table to identify the bottom components.

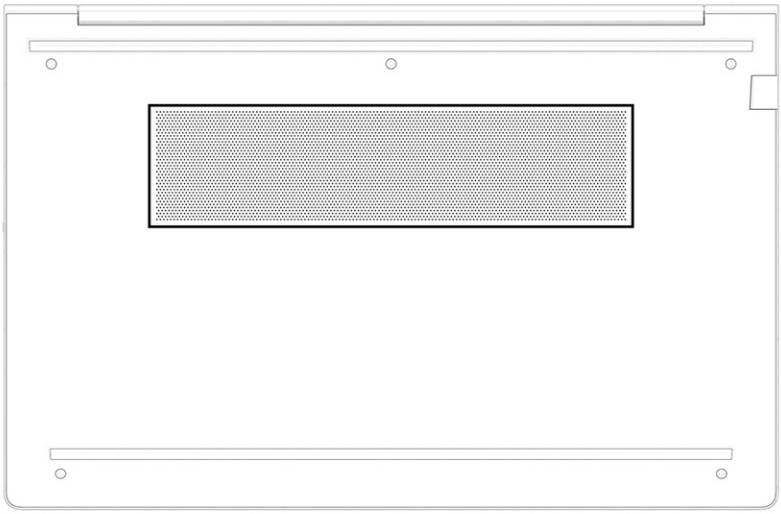

Table 2-8 Bottom component and description

Component	Description
Vent	Enables airflow to cool internal components. NOTE: The computer fan starts up automatically to cool internal components and prevent overheating. It is normal for the internal fan to cycle on and off during routine operation.

Rear

Use the illustration and table to identify the rear components.



Table 2-9 Rear component and description

Component	Description
Vent	Enables airflow to cool internal components. NOTE: The computer fan starts up automatically to cool internal components and prevent overheating. It is normal for the internal fan to cycle on and off during routine operation.

Labels

The labels affixed to the computer provide information you might need when you troubleshoot system problems or travel internationally with the computer. Labels might be in paper form or imprinted on the product.

IMPORTANT: Check the following locations for the labels described in this section: the bottom of the computer, inside the battery bay, under the service door, on the back of the display, or on the bottom of a tablet kickstand.

- Service label—Provides important information to identify your computer. When contacting support, you might be asked for the serial number, the product number, or the model number. Locate this information before you contact support.

  Your service label will resemble one of the examples shown below. Refer to the illustration that most closely matches the service label on your computer.

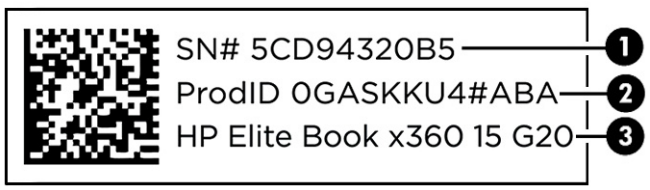

Table 2-10 Service label components

Component	
(1)	Serial number
(2)	Product ID
(3)	HP product name

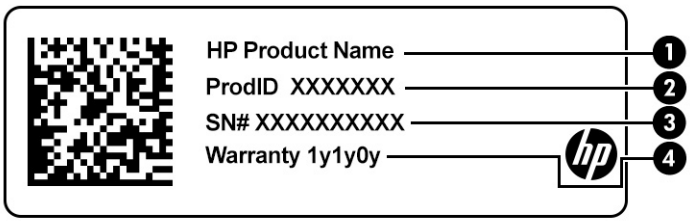

Table 2-11 Service label components

Component	
(1)	HP product name
(2)	Product ID
(3)	Serial number
(4)	Warranty period

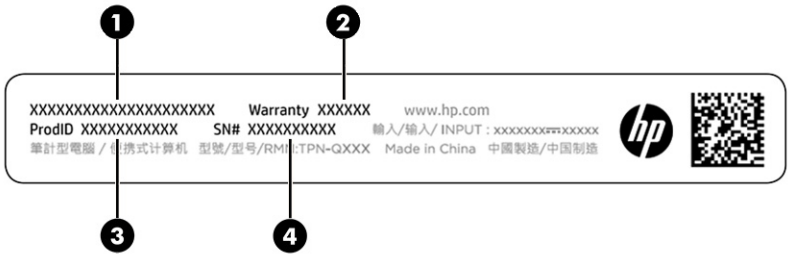

Table 2-12 Service label components

Component	
(1)	HP product name
(2)	Warranty period
(3)	Product ID
(4)	Serial number

- Regulatory labels—Provide regulatory information about the computer.
- Wireless certification labels—Provide information about optional wireless devices and the approval markings for the countries or regions in which the devices have been approved for use.

Using a SIM card (select products only)

Use these instructions to insert a SIM card.

IMPORTANT: You can damage the SIM card if you insert the wrong size card or insert it or the SIM card tray in the wrong direction. The card might also become stuck in the slot. Do not use SIM card adapters. To prevent damage to the SIM card or connectors, use minimal force when inserting or removing a SIM card.

Determining the correct SIM card size for your computer

Before purchasing a SIM card, follow these instructions to determine the correct SIM card size for your computer.

1. Go to http://www.hp.com/support, and then search for your computer by product name or number.
2. Select **Product Information**.
3. Refer to the listed options to determine which card to purchase.

Inserting a SIM card in an external slot

To insert a SIM card in an external slot, follow these steps.

1. Turn off the computer by using the Shut down command.
2. Insert the SIM card into the SIM card slot, and then press in on the SIM card until it is firmly seated.

NOTE: Your SIM card or the SIM card slot in your computer might look different from the illustration in this section.

NOTE: Your SIM card slot may have an icon to show which way the card should be inserted into the computer.

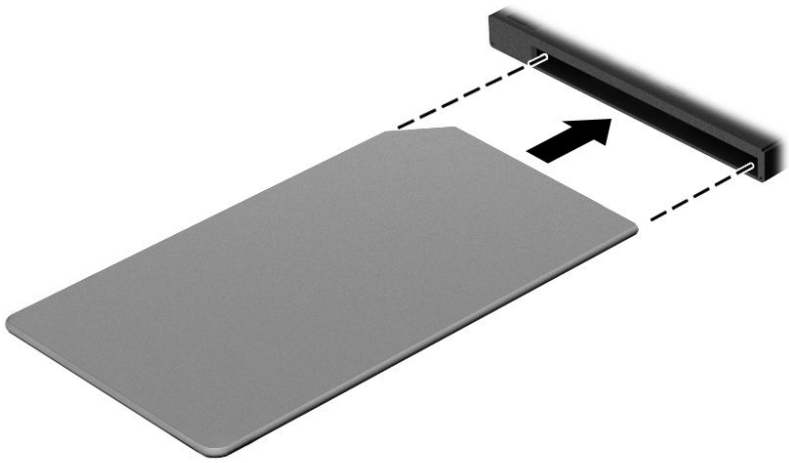

To remove the SIM card, press in gently on the card to disengage the SIM lock, and then remove it from the slot.

3 Illustrated parts catalog

Use this chapter to determine the spare parts that are available for the computer.

Computer major components

To identify the computer major components, use this illustration and table.

NOTE: HP continually improves and changes product parts. For complete and current information about supported parts for your computer, go to http://partsurfer.hp.com, select your country or region, and then follow the on-screen instructions.

NOTE: Details about your computer, including model, serial number, product key, and length of warranty, are on the service tag at the bottom of your computer.

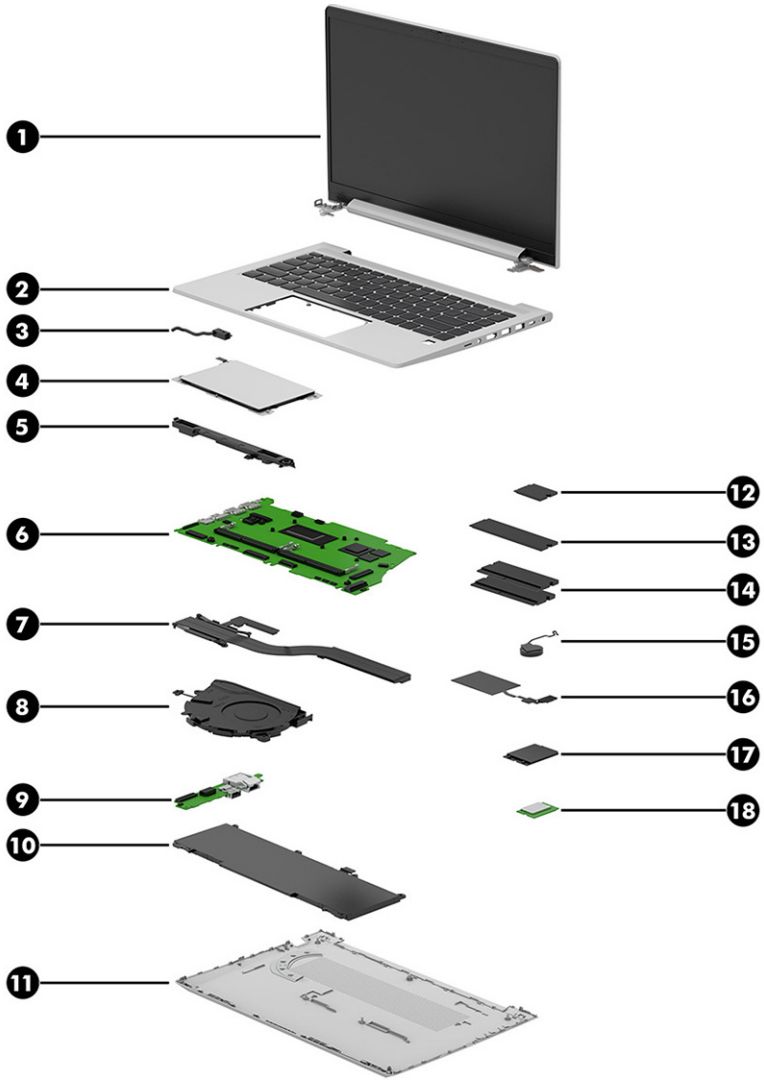

Table 3-1 **Computer major component descriptions and part numbers**

Item	Component	Spare part number
(1)	**Display assembly** **NOTE:** Display spare parts are available only as subcomponents. For spare part information, see Display assembly subcomponents on page 22.	not available as a spare part
(2)	**Top cover with keyboard** **NOTE:** For a detailed list of country codes, see Top cover with keyboard on page 72.	
	Backlit	N40111-xxx
	Not backlit	N40113-xxx
	Privacy	N40112-xxx
(3)	**Power connector cable**	M21725-001
(4)	**Touchpad** **NOTE:** The touchpad cable is available in the Cable Kit as spare part number N00097-001.	
	Models without NFC	N00096-001
	Models with NFC	M47178-001
(5)	**Speaker**	M21400-001
(6)	**System board** (includes integrated processor) **NOTE:** All system board spare part kits include replacement thermal material. All system boards use the following part numbers: xxxxxx-001: Non-Windows operating systems xxxxxx-601: Windows operating system The system board support repair kit is available as spare part number N43785-888.	
	AMD Ryzen 7 7730U processor	N41840-xx1
	AMD Ryzen 7 7730U processor, models with a 5 MP IR camera	N41845-xx1
	AMD Ryzen 7 7730U processor and WWAN	N41846-xx1
	AMD Ryzen 7 PRO 7730U processor and WWAN	N41847-xx1
	AMD Ryzen 7 7730U processor, models with a 5 MP IR camera and WWAN	N54413-xx1
	AMD Ryzen 5 7530U processor	N41841-xx1
	AMD Ryzen 5 7530U processor, models with a 5 MP IR camera	N41838-xx1
	AMD Ryzen 5 7530U processor and WWAN	N41839-xx1
	AMD Ryzen 5 PRO 7530U processor	N41844-xx1
	AMD Ryzen 5 PRO 7530U processor, models with a 5 MP IR camera	N41842-xx1
	AMD Ryzen 5 PRO 7530U processor and WWAN	N41843-xx1
	AMD Ryzen 5 PRO 7530U, models with a 5 MP IR camera and WWAN	N54414-xx1
	AMD Ryzen 3 7330U processor	N41837-xx1
	AMD Ryzen 3 7330U processor, models with a 5 MP IR camera	N41835-xx1

Table 3-1 Computer major component descriptions and part numbers (continued)

Item	Component	Spare part number
	AMD Ryzen 3 7330U processor and WWAN	N41836-xx1
(7)	**Heat sink** (includes replacement thermal material)	M47406-001
(8)	**Fan**	N00095-001
(9)	**I/O board** NOTE: The I/O board cables are available in the Cable Kit as spare part number N00097-001. The RJ-45 door is available as spare part number M21396-001.	
	For use in models with AMD PRO processors	N40109-001
	For use in models without AMD PRO processors	N40110-001
(10)	**Battery**	
	3 cell, 51 Whr	M73472-005
	3 cell, 42 Whr	M75599-005
(11)	**Bottom cover**	N00121-001
(12)	**Solid-state drive** (M2. 2230) NOTE: The solid-state drive support kit is available as spare part number N00354-001.	
	256 GB, PCIe, 2230	M11042-001
(13)	**Solid-state drive** (PCIe 4× 4, M2. 2280) NOTE: The solid-state drive support kit is available as spare part number N00354-001.	
	2 TB, TLC	M52027-001
	1 TB, TLC	M16560-001
	1 TB, PCIe-4 × 4, TLC	N22908-001
	1 TB, PCIe-4 × 4, TLC, self-encrypting drive (SED)	N24954-001
	1 TB, TLC, self-encrypting drive (SED)	M52033-001
	512 GB, TLC	M17436-001
	512 GB, self-encrypting drive (SED)	M52031-001
	512 GB	N24955-001
	256 GB, self-encrypting drive (SED)	N35225-001
(14)	**Memory modules** (DDR4, PC-3200; not illustrated)	
	32 GB	M09713-001
	16 GB	L67710-001
	8 GB	L46598-001
	4 GB	L83673-001
(15)	**Real-time clock (RTC) battery**	M34737-001
(16)	**NFC module**	M27890-001
(17)	**WWAN module**	

Table 3-1 Computer major component descriptions and part numbers (continued)

Item	Component	Spare part number
	Intel XMM 7560 R + LTE-Advanced Pro WWAN (Cat 16)	N00182-001
(18)	**WLAN module**	
	Mediatek RZ616 Wi-Fi 6E Bluetooth 5.3 AIM-T WLAN	N19618-001
	Realtek 8852CE Wi-Fi 6E Bluetooth 5.3 WLAN	N22541-001
	Fingerprint reader (not illustrated) NOTE: The fingerprint reader cable is available in the Cable Kit as spare part number N00097-001. The fingerprint reader bracket is available in the Bracket Kit as spare part number M21372-001. The fingerprint reader insert (for use in models without a fingerprint reader) is available in the Plastics Kit as spare part number N38997-001.	N00879-001
	Smart card reader (not illustrated)	N12914-001

Display assembly subcomponents

To identify the display assembly subcomponents, use this illustration and table.

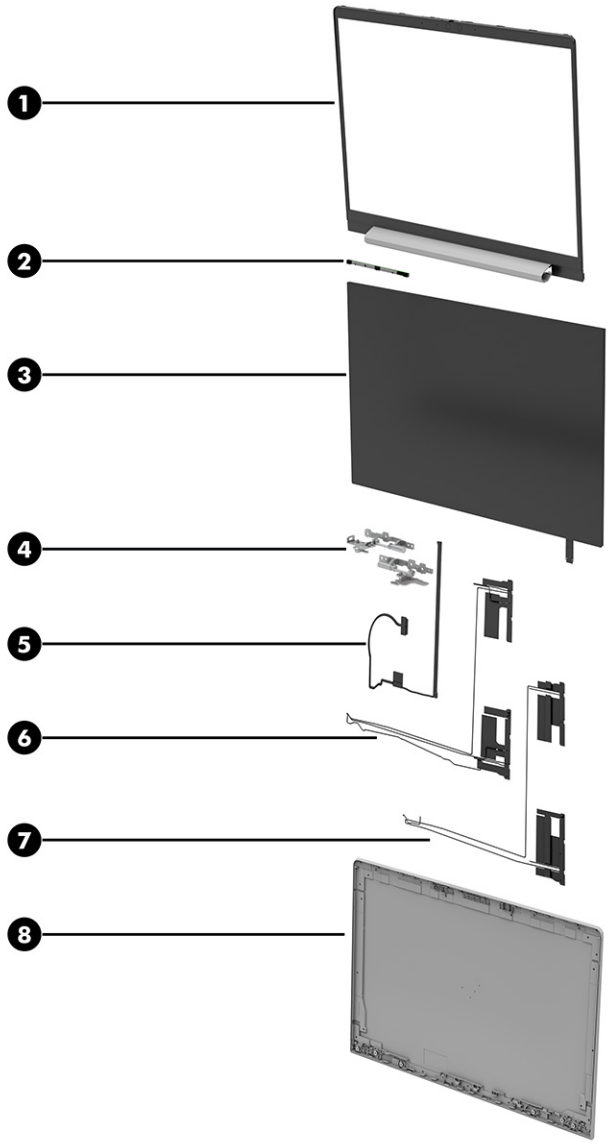

Table 3-2 Display component descriptions and part numbers

Item	Component	Spare part number
(1)	Display bezel	
	For use in models with an FHD display without a camera	N00101-001
	For use in models with an FHD display and HD camera	N00099-001
	For use in models with an FHD display and IR camera	N00100-001
	For use in models with an FHD display and 5 MP camera	N44236-001
	For use in models with an FHD privacy display and IR camera	N00102-001
	For use in models with an HD display and no camera	N07340-001
	For use in models with an HD display and HD camera	N07339-001

Table 3-2 Display component descriptions and part numbers (continued)

Item	Component	Spare part number
(2)	**Camera module**	
	HD camera	N39013-001
	HD + IR camera	N00112-001
	5 MP camera	N39014-001
*	**Microphone module**	N39015-001
(3)	**Display panel** (includes cover and bezel adhesive) NOTE: Display panel tape is available as spare part number N39006-001.	
	FHD, 400 nits	N42803-001
	FHD, 250 nits	N42802-001
	FHD, 250 nits, touch	N00080-001
	FHD, privacy	N00079-001
	HD, 250 nits	N00083-001
(4)	**Hinges** (left and right; includes bezel trim pieces, bezel trim protective shielding, display panel adhesive, and bezel adhesive)	N39016-001
(5)	**Display/camera cable** (includes cover and bezel adhesive)	N39012-001
(6)	**WLAN antennas and cables** (includes camera, cover, and bezel adhesive)	N39003-001
(7)	**WWAN antennas and cables** (includes cover and bezel adhesive)	
	3 mm panel	N39005-001
	2 mm panel	N44235-001
(8)	**Display back cover** (includes antenna, bezel adhesive)	
	Models with a 250 nit panel	N44240-001
	Models with a privacy display	N44241-001
	Models with a 400 nit panel, WWAN	N44239-001
	Models with a 400 nit panel and a 5 MP IR camera	N44237-001
	Models with WWAN, 3 mm display	N00106-001
	Ambient light sensor (not illustrated, includes cover adhesive and bezel adhesive)	N00883-001

Cable Kit

To identify the contents of the Cable Kit, use this table.

Table 3-3 Cable Kit content descriptions and part number

Component	Spare part number
Cable Kit, includes:	N00097-001
I/O board cable	
I/O board cable (USB 3.0)	

Table 3-3 Cable Kit content descriptions and part number (continued)

Component	Spare part number
Touchpad cable	
Fingerprint reader board cable	

Miscellaneous parts

To identify the miscellaneous parts, use this table.

Table 3-4 Miscellaneous part descriptions and part numbers

Component	Spare part number
AC adapters	
280 W, PFC, 7.4 mm	M52952-001
120 W, PFC, 7.4 mm	L89695-001
120 W, PFC, 4.5 mm	M95377-001
65 W, nPFC, USB-C®, 1.8 m (6.0 ft)	L67440-001
65 W, nPFC, 3 pin, 4.5 mm	710412-001
65 W, nPFC, 4.5 mm, EM	N31180-001
65 W, USB Type-C	N05175-001
45 W, nPFC, SMART, RC, 4.5 mm, nonslim	741727-001
45 W, nPFC, 3 pin, USB-C, 1.8 m (6.0 ft)	L43407-001
45 W, nPFC, 2 pin, 4.5 mm	742436-001
Smart AC adapter, 7.4 mm	734734-001
DisplayPort-to-DVI adapter	753744-001
USB-C-to-DisplayPort adapter	831753-001
USB-C-to-DisplayPort adapter, TAA	N25155-001
USB-C-to-HDMI 2.0 adapter	935325-001
USB-C-to-VGA adapter	831751-001
USB-C-to-RJ-45 adapter	M95985-001
USB-C-to-RJ-45 adapter, TAA	N22602-001
USB-C-to-USB-A adapter	L65254-001
USB 3.0-to-gigabit RJ-45 adapter	M95984-001
USB-C (male)-to-USB-C (male) adapter	L65253-001
HDMI-to-VGA adapter	701943-001
HDMI-to-VGA adapter, TAA	N25154-001
USB-C travel hub	L72056-001
USB-C-to-USB-A hub	916838-001

Table 3-4 Miscellaneous part descriptions and part numbers (continued)

Component	Spare part number
HP Universal USB-C Multiport Hub	M96882-001
WLAN protective tape	N02047-001
Screw Kit (for use with HP USB-C Dock G5)	L64089-001
Screw Kit (for use in product component removal and replacement)	N00352-001
Plastics Kit (includes fingerprint reader insert, cable holder, SIM card insert, smart card insert, memory module protective shielding, and microphone rubber with mesh)	N38997-001
Bluetooth travel mouse	L62043-001
USB mouse	L95713-001
HP Wireless Premium Mouse	923947-001
HP 125 Laser Wired Mouse	M27884-001
HP 435 Wireless Mouse	M62277-001
HP USB Keyboard	L95712-001
HP 125 Wired Keyboard	M27881-001
Nano lock	918431-001
HP Nano Combination Cable Lock	N10500-001
HP Essential Nano Combination Cable Lock	N10501-001
Sure Key cable lock	L65088-001
External optical drive	747080-001
Thunderbolt™ 120 W G4 dock (with cable)	M97105-001
Thunderbolt 280 W G4 dock (with cable)	M97106-001
Thunderbolt 120 W G4 dock (with cable) (TAA)	N17490-001
Thunderbolt 280 W G4 dock (with cable) (TAA)	N17491-001
Thunderbolt dock 120 W (with cable)	L15809-001
USB-C dock (with cable)	L64086-001
USB-C/A universal dock (with cable)	L64087-001
Bottom case for USB-C/A universal doc	L64088-001
Bottom case for USB-C dock	L65256-001
Cable kit for use with Thunderbolt 120 W G4 dock	M88058-001
Cable kit for use with Thunderbolt 280 W G4 dock	M88059-001
HP Prelude Pro 15.6 top load case	M03618-001
HP Prelude Pro 15.6 backpack	M03617-001
HP Business 17.3 Laptop Backpack	M55004-001
HP Business 14.1 Laptop Bag	M55007-001
HP 14.1 Business Slim Load Top Case	L05333-001

Table 3-4 **Miscellaneous part descriptions and part numbers (continued)**

Component	Spare part number
Power cord (C13, premium, 1.0 m [3.3 ft])	
Argentina	L32029-001
Australia	N24670-001
Brazil	L32030-001
Denmark	N24672-001
Europe (Austria, Belgium, Finland, France, Germany, the Netherlands, Norway, and Sweden)	N24669-001
India	N24679-001
Israel	N24678-001
Italy	L32031-001
Japan	N24680-001
North America	N24671-001
People's Republic of China	N24676-001
South Africa	N24674-001
South Korea	N24675-001
Switzerland	N24673-001
Taiwan	N24677-001
The United Kingdom	N24668-001
Power cord (C7, conventional, 1.0 m [3.3 ft])	
Japan	L19375-001
Power adapter, duckhead	
Japan	L33157-001
Power cord (C5, conventional, 1.0 m [3.3 ft], HF)	
Denmark	M79264-001
Europe (Austria, Belgium, Finland, France, Germany, the Netherlands, Norway, and Sweden)	M79266-001
Europe bundle	N16170-001
Israel	M82712-001
Switzerland	M79265-001
Thailand bundle	M85418-001
United Kingdom bundle	M82711-001
Power cord (C5, conventional, 1.0 m [3.3 ft])	
Argentina	L19357-001
Australia	L19358-001
Brazil	L19359-001
Denmark	L19360-001

Table 3-4 Miscellaneous part descriptions and part numbers (continued)

Component	Spare part number
Europe (Austria, Belgium, Finland, France, Germany, the Netherlands, Norway, and Sweden)	L19361-001
Europe (ADP + cord)	N16170-001
India	L19363-001
Israel	L19362-001
Italy	L19364-001
Japan	L19365-001
North America	L19367-001
People's Republic of China	L19368-001
South Africa	L19369-001
South Korea	L19366-001
Switzerland	L19370-001
Taiwan	L19372-001
Thailand	L19371-001
Thailand (ADP + cord)	M85418-001
The United Kingdom	L19373-001
Power cord (C5, conventional, 1.8 m [6.0 ft])	
Argentina	L19357-002
Australia	L19358-002
Brazil	L19359-002
Denmark	L19360-002
Europe (Austria, Belgium, Finland, France, Germany, the Netherlands, Norway, and Sweden)	L19361-002
India	L19363-002
Israel	L19362-002
Italy	L19364-002
Japan	L19365-002
North America	L19367-002
People's Republic of China	L19368-002
South Africa	L19369-002
South Korea	L19366-002
Switzerland	L19370-002
Taiwan	L19372-002
Thailand	L19371-002
The United Kingdom	L19373-002
Power cord (C5, conventional, duckhead, 1.8 m [6.0 ft])	

Table 3-4 Miscellaneous part descriptions and part numbers (continued)

Component	Spare part number
Brazil	L19341-002

4 Removal and replacement procedures preliminary requirements

Use this information to properly prepare to disassemble and reassemble the computer.

Tools required

You need the following tools to complete the removal and replacement procedures:

- Tweezers
- Nonconductive, nonmarking pry tool
- Magnetic Phillips P1 screwdriver

Service considerations

The following sections include some of the considerations that you must keep in mind during disassembly and assembly procedures.

NOTE: As you remove each subassembly from the computer, place the subassembly (and all accompanying screws) away from the work area to prevent damage.

Plastic parts

Using excessive force during disassembly and reassembly can damage plastic parts.

Cables and connectors

Handle cables with extreme care to avoid damage.

IMPORTANT: When servicing the computer, be sure that cables are placed in their proper locations during the reassembly process. Improper cable placement can damage the computer.

Apply only the tension required to unseat or seat the cables during removal and insertion. Handle cables by the connector whenever possible. In all cases, avoid bending, twisting, or tearing cables. Be sure that cables are routed so that they cannot be caught or snagged as you remove or replace parts. Handle flex cables with extreme care; these cables tear easily.

Drive handling

Note the following guidelines when handling drives.

IMPORTANT: Drives are fragile components. Handle them with care. To prevent damage to the computer, damage to a drive, or loss of information, observe these precautions:

- Before removing or inserting a hard drive, shut down the computer. If you are unsure whether the computer is off or in Hibernation, turn the computer on, and then shut it down through the operating system.

- Before handling a drive, be sure that you are discharged of static electricity. While handling a drive, avoid touching the connector.
- Before removing an optical drive, be sure that a disc is not in the drive, and be sure that the optical drive tray is closed.
- Handle drives on surfaces covered with at least 2.54 cm (1 inch) of shock-proof foam.
- Avoid dropping drives from any height onto any surface.
- After removing a hard drive or an optical drive, place it in a static-proof bag.
- Avoid exposing an internal hard drive to products that have magnetic fields, such as monitors or speakers.
- Avoid exposing a drive to temperature extremes or liquids.
- If a drive must be mailed, place the drive in a bubble pack mailer or other suitable form of protective packaging, and label the package “FRAGILE.”

Electrostatic discharge information

A sudden discharge of static electricity from your finger or other conductor can destroy static-sensitive devices or microcircuitry. Often the spark is neither felt nor heard, but damage occurs. An electronic device exposed to electrostatic discharge (ESD) might not appear to be affected at all and can work perfectly throughout a normal cycle. The device might function normally for a while, but it has been degraded in the internal layers, reducing its life expectancy.

Networks built into many integrated circuits provide some protection, but in many cases, the discharge contains enough power to alter device parameters or melt silicon junctions.

IMPORTANT: To prevent damage to the device when you remove or install internal components, observe these precautions:

- Keep components in their electrostatic-safe containers until you are ready to install them.
- Before touching an electronic component, discharge static electricity by using the guidelines described in Personal grounding methods and equipment on page 32.
- Avoid touching pins, leads, and circuitry. Handle electronic components as little as possible.
- If you remove a component, place it in an electrostatic-safe container.

Generating static electricity

Follow these static electricity guidelines:

- Different activities generate different amounts of static electricity.
- Static electricity increases as humidity decreases.

Table 4-1 **Static electricity occurrence based on activity and humidity**

	Relative humidity		
Event	**55%**	**40%**	**10%**
Walking across carpet	7,500 V	15,000 V	35,000 V
Walking across vinyl floor	3,000 V	5,000 V	12,000 V
Motions of bench worker	400 V	800 V	6,000 V
Removing dual in-line packages (DIPs) from plastic tube	400 V	700 V	2,000 V
Removing DIPs from vinyl tray	2,000 V	4,000 V	11,500 V
Removing DIPs from polystyrene foam	3,500 V	5,000 V	14,500 V
Removing bubble pack from PCB (printed circuit board)	7,000 V	20,000 V	26,500 V
Packing PCBs in foam-lined box	5,000 V	11,000 V	21,000 V
Multiple electric components can be packaged together in plastic tubes, trays, or polystyrene foam.			

NOTE: As little as 700 V of static electricity can degrade a product.

Preventing electrostatic damage to equipment

Many electronic components are sensitive to ESD. Circuitry design and structure determine the degree of sensitivity.

The following packaging and grounding precautions are necessary to prevent static electricity damage to electronic components:

- To avoid hand contact, transport products in static-safe containers such as tubes, bags, or boxes.
- Protect all electrostatic parts and assemblies with conductive or approved containers or packaging.
- Keep electrostatic-sensitive parts in their containers until they arrive at static-free stations.
- Place items on a grounded surface before removing them from their container.
- Always be properly grounded when touching a sensitive component or assembly.
- Avoid contact with pins, leads, or circuitry.
- Place reusable electrostatic-sensitive parts from assemblies in protective packaging or conductive foam.

Personal grounding methods and equipment

Using certain equipment can prevent static electricity damage to electronic components.

- **Wrist straps** are flexible straps with a maximum of 1 MΩ ±10% resistance in the ground cords. To provide proper ground, a strap must be worn snug against bare skin. The ground cord must be connected and fit snugly into the banana plug connector on the grounding mat or workstation.
- You can use **heel straps, toe straps, and boot straps** at standing workstations. These straps are compatible with most types of shoes or boots. On conductive floors or dissipative floor mats, use them on both feet with a maximum of 1 MΩ ±10% resistance between the operator and ground.

Table 4-2 **Static shielding protection levels**

Static shielding protection levels	
Method	**Voltage**
Antistatic plastic	1,500
Carbon-loaded plastic	7,500
Metallized laminate	15,000

Grounding the work area

To prevent static damage at the work area, follow these precautions:

- Cover the work surface with approved static-dissipative material.
- Use a wrist strap connected to a properly grounded work surface and use properly grounded tools and equipment.
- Use static-dissipative mats, foot straps, or air ionizers to give added protection.
- Handle electrostatic sensitive components, parts, and assemblies by the case or PCB laminate. Handle them only at static-free work areas.
- Turn off power and input signals before inserting and removing connectors or test equipment.
- Use fixtures made of static-safe materials when fixtures must directly contact dissipative surfaces.
- Keep the work area free of nonconductive materials, such as ordinary plastic assembly aids and polystyrene foam.
- Use conductive field service tools, such as cutters, screwdrivers, and vacuums.
- Avoid contact with pins, leads, or circuitry.

Recommended materials and equipment

HP recommends certain materials and equipment to prevent static electricity:

- Antistatic tape
- Antistatic smocks, aprons, or sleeve protectors
- Conductive bins and other assembly or soldering aids
- Conductive foam
- Conductive tabletop workstations with ground cord of 1 MΩ ±10% resistance
- Static-dissipative table or floor mats with hard tie to ground
- Field service kits
- Static awareness labels
- Wrist straps and footwear straps providing 1 MΩ ±10% resistance
- Material handling packages

- Conductive plastic bags
- Conductive plastic tubes
- Conductive tote boxes
- Opaque shielding bags
- Transparent metallized shielding bags
- Transparent shielding tubes

Cleaning your computer

Cleaning your computer regularly removes dirt and debris so that your device continues to operate at its best. Use the following information to safely clean the external surfaces of your computer.

Enabling HP Easy Clean (select products only)

HP Easy Clean helps you to avoid accidental input while you clean the computer surfaces. This software disables devices such as the keyboard, touch screen, and touchpad for a preset amount of time so that you can clean all computer surfaces.

1. Start HP Easy Clean in one of the following ways:
   - Select the **Start** menu, and then select **HP Easy Clean**.

     – or –

   - Select the **HP Easy Clean** icon in the taskbar.

     – or –

   - Select **Start**, and then select the **HP Easy Clean** tile.
2. Now that your device is disabled for a short period, see Removing dirt and debris from your computer on page 34 for the recommended steps to clean the high-touch, external surfaces on your computer. After you remove the dirt and debris, you can also clean the surfaces with a disinfectant. See Cleaning your computer with a disinfectant on page 35 for guidelines to help prevent the spread of harmful bacteria and viruses.

Removing dirt and debris from your computer

Here are the recommended steps to clean dirt and debris from your computer.

For computers with wood veneer, see Caring for wood veneer (select products only) on page 36.

1. Wear disposable gloves made of latex (or nitrile gloves, if you are latex-sensitive) when cleaning the surfaces.
2. Turn off your device and unplug the power cord and other connected external devices. Remove any installed batteries from items such as wireless keyboards.

⚠ **CAUTION:** To prevent electric shock or damage to components, never clean a product while it is turned on or plugged in.

3. Moisten a microfiber cloth with water. The cloth should be moist, but not dripping wet.

IMPORTANT: To avoid damaging the surface, avoid abrasive cloths, towels, and paper towels.

4. Wipe the exterior of the product gently with the moistened cloth.

IMPORTANT: Keep liquids away from the product. Avoid getting moisture in any openings. If liquid makes its way inside your HP product, it can cause damage to the product. Do not spray liquids directly on the product. Do not use aerosol sprays, solvents, abrasives, or cleaners containing hydrogen peroxide or bleach that might damage the finish.

5. Start with the display (if applicable). Wipe carefully in one direction, and move from the top of the display to the bottom. Finish with any flexible cables, like power cord, keyboard cable, and USB cables.

6. Be sure that surfaces have completely air-dried before turning the device on after cleaning.

7. Discard the gloves after each cleaning. Clean your hands immediately after you remove the gloves.

See Cleaning your computer with a disinfectant on page 35 for recommended steps to clean the high-touch, external surfaces on your computer to help prevent the spread of harmful bacteria and viruses.

Cleaning your computer with a disinfectant

The World Health Organization (WHO) recommends cleaning surfaces, followed by disinfection, as a best practice for preventing the spread of viral respiratory illnesses and harmful bacteria.

After cleaning the external surfaces of your computer using the steps in Removing dirt and debris from your computer on page 34, Caring for wood veneer (select products only) on page 36, or both, you might also choose to clean the surfaces with a disinfectant. A disinfectant that is within HP's cleaning guidelines is an alcohol solution consisting of 70% isopropyl alcohol and 30% water. This solution is also known as rubbing alcohol and is sold in most stores.

Follow these steps when disinfecting high-touch, external surfaces on your computer:

1. Wear disposable gloves made of latex (or nitrile gloves, if you are latex-sensitive) when cleaning the surfaces.

2. Turn off your device and unplug the power cord and other connected external devices. Remove any installed batteries from items such as wireless keyboards.

CAUTION: To prevent electric shock or damage to components, never clean a product while it is turned on or plugged in.

3. Moisten a microfiber cloth with a mixture of 70% isopropyl alcohol and 30% water. The cloth should be moist, but not dripping wet.

CAUTION: Do not use any of the following chemicals or any solutions that contain them, including spray-based surface cleaners: bleach, peroxides (including hydrogen peroxide), acetone, ammonia, ethyl alcohol, methylene chloride, or any petroleum-based materials, such as gasoline, paint thinner, benzene, or toluene.

IMPORTANT: To avoid damaging the surface, avoid abrasive cloths, towels, and paper towels.

4. Wipe the exterior of the product gently with the moistened cloth.

IMPORTANT: Keep liquids away from the product. Avoid getting moisture in any openings. If liquid makes its way inside your HP product, it can cause damage to the product. Do not spray liquids directly on the product. Do not use aerosol sprays, solvents, abrasives, or cleaners containing hydrogen peroxide or bleach that might damage the finish.

5. Start with the display (if applicable). Wipe carefully in one direction, and move from the top of the display to the bottom. Finish with any flexible cables, like power cord, keyboard cable, and USB cables.

6. Be sure that surfaces have completely air-dried before turning the device on after cleaning.

7. Discard the gloves after each cleaning. Clean your hands immediately after you remove the gloves.

Caring for wood veneer (select products only)

Your product might feature high-quality wood veneer. As with all natural wood products, proper care is important for best results over the life of the product. Because of the nature of natural wood, you might see unique variations in the grain pattern or subtle variations in color, which are normal.

- Clean the wood with a dry, static-free microfiber cloth or chamois.
- Avoid cleaning products containing substances such as ammonia, methylene chloride, acetone, turpentine, or other petroleum-based solvents.
- Do not expose the wood to sun or moisture for long periods of time.
- If the wood becomes wet, dry it by dabbing with an absorbent, lint-free cloth.
- Avoid contact with any substance that might dye or discolor the wood.
- Avoid contact with sharp objects or rough surfaces that might scratch the wood.

See Removing dirt and debris from your computer on page 34 for the recommended steps to clean the high-touch, external surfaces on your computer. After you remove the dirt and debris, you can also clean the surfaces with a disinfectant. See Cleaning your computer with a disinfectant on page 35 for sanitizing guidelines to help prevent the spread of harmful bacteria and viruses.

Packaging and transporting guidelines

Follow these grounding guidelines when packaging and transporting equipment:

- To avoid hand contact, transport products in static-safe tubes, bags, or boxes.
- Protect ESD-sensitive parts and assemblies with conductive or approved containers or packaging.
- Keep ESD-sensitive parts in their containers until the parts arrive at static-free workstations.
- Place items on a grounded surface before removing items from their containers.
- Always be properly grounded when touching a component or assembly.
- Store reusable ESD-sensitive parts from assemblies in protective packaging or nonconductive foam.

- Use transporters and conveyors made of antistatic belts and roller bushings. Be sure that mechanized equipment used for moving materials is wired to ground and that proper materials are selected to avoid static charging. When grounding is not possible, use an ionizer to dissipate electric charges.

Accessing support information

To find the HP support that you need, use this information.

Table 4-3 Support information locations

Service consideration	Path to access information
Records of reported failure incidents stored on the computer	**Windows®:** Preoperating system failures are logged in the BIOS Event Log. To view the BIOS Event Log: 1. Press the power button. 2. Immediately and repeatedly press esc when the power button light turns white. NOTE: If you do not press esc at the appropriate time, you must restart the computer and again repeatedly press esc when the power button light turns white to access the utility. 3. Press f10 to enter the BIOS setup. 4. (On commercial products) Under the **Main** tab, select **BIOS event log**, and then select **View BIOS Event Log**. - or - (On consumer products) Under the **Main** tab, select **System Log**. Post-operating system failures are logged in the Event Viewer. 1. Turn on the computer and allow the operating system to open. 2. Select the search icon in the taskbar. 3. Type `Event Viewer`, and then press enter. 4. Select the log from the left panel. Details display in the right panel. **Chrome™:** 1. Go to support.google.com/chrome. 2. Search `collect Chrome device logs`.
Technical bulletins	To locate technical bulletins: 1. Go to www.hp.com. 2. Place the cursor over **Problem solving** to display more options. 3. Select **Support & Troubleshooting**. 4. Type the serial number, product number, or product name to go to the product support page. 5. Select **Advisories** to view technical bulletins.

Table 4-3 Support information locations (continued)

Service consideration	Path to access information
Repair professionals	To locate repair professionals: 1. Go to www.hp.com. 2. Place the cursor over **Support resources** to display more options. 3. Select **Authorized service providers**.
Component and diagnosis information, failure detection, and required action	To locate diagnosis information and actions: 1. Go to http://www.hp.com/go/techcenter/pcdiags. 2. Select **Get Support**. 3. Near the bottom of the window, select **Notebook PCs**, and then select your location.

5 Removal and replacement procedures for Customer Self-Repair parts

This chapter provides removal and replacement procedures for Customer Self-Repair parts.

NOTE: The Customer Self-Repair program is not available in all locations. Installing a part that is not supported by the Customer Self-Repair program can void your warranty. Check your warranty to determine whether Customer Self-Repair is supported in your location.

Component replacement procedures

To remove and replace computer components, use these procedures.

NOTE: Details about your computer, including model, serial number, product key, and length of warranty, are on the service tag at the bottom of your computer.

NOTE: HP continually improves and changes product parts. For complete and current information about supported parts for your computer, go to http://partsurfer.hp.com, select your country or region, and then follow the on-screen instructions.

Make special note of each screw size and location during removal and replacement.

Preparation for disassembly

To remove and replace computer components, use these procedures:

For initial safety procedures, see Removal and replacement procedures preliminary requirements on page 30.

1. Turn off the computer. If you are unsure whether the computer is off or in Hibernation, turn the computer on, and then shut it down through the operating system.
2. Disconnect the power from the computer by unplugging the power cord from the computer.
3. Disconnect all external devices from the computer.

Bottom cover

To remove the bottom cover, use this procedure and illustration.

Table 5-1 Bottom cover description and part number

Description	Spare part number
Bottom cover	N00121-001

Before removing the bottom cover, prepare the computer for disassembly (see Preparation for disassembly on page 39).

Remove the bottom cover:

1. Loosen the five captive Phillips screws that secure the bottom cover to the computer.

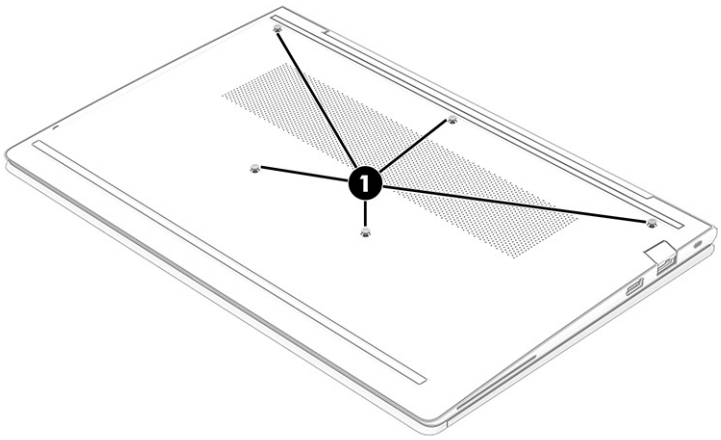

2. Starting near the hinges, use a nonmarking, nonconductive tool **(1)** to release the edges of the bottom cover from the computer **(2)**.
3. Remove the bottom cover from the computer **(3)**.

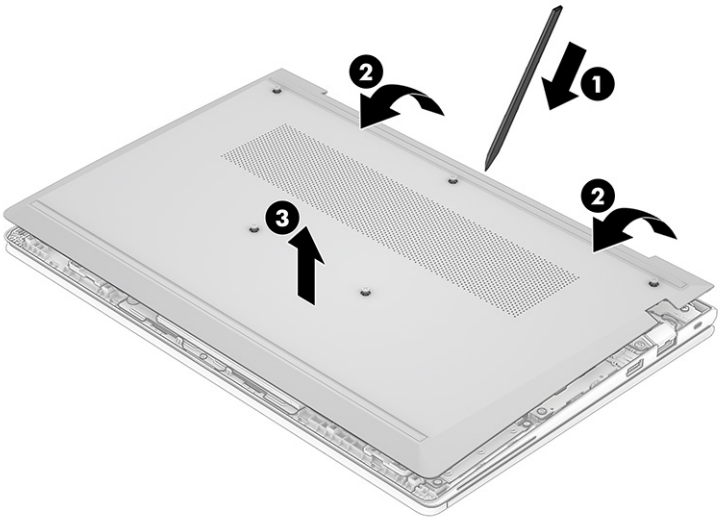

To replace the bottom cover, reverse the removal procedures.

Using a SIM card (select products only)

Use these instructions to insert a SIM card.

IMPORTANT: You can damage the SIM card if you insert the wrong size card or insert it or the SIM card tray in the wrong direction. The card might also become stuck in the slot. Do not use SIM card adapters. To prevent damage to the SIM card or connectors, use minimal force when inserting or removing a SIM card.

Determining the correct SIM card size for your computer

Before purchasing a SIM card, follow these instructions to determine the correct SIM card size for your computer.

1. Go to http://www.hp.com/support, and then search for your computer by product name or number.
2. Select **Product Information**.
3. Refer to the listed options to determine which card to purchase.

Inserting a SIM card in an external slot

To insert a SIM card in an external slot, follow these steps.

1. Turn off the computer by using the Shut down command.
2. Insert the SIM card into the SIM card slot, and then press in on the SIM card until it is firmly seated.

NOTE: Your SIM card or the SIM card slot in your computer might look different from the illustration in this section.

NOTE: Your SIM card slot may have an icon to show which way the card should be inserted into the computer.



To remove the SIM card, press in gently on the card to disengage the SIM lock, and then remove it from the slot.

Memory modules

To remove the memory modules, use this procedure and illustration.

Table 5-2 **Memory module descriptions and part numbers**

Description	Spare part number
32 GB, DDR4-3200	M09713-001
16 GB, DDR4-3200	L67710-001
8 GB, DDR4-3200	L46598-001

Table 5-2 Memory module descriptions and part numbers (continued)

Description	Spare part number
4 GB, DDR4-3200	L83673-001

Before removing the memory, follow these steps:

1. Prepare the computer for disassembly (see Preparation for disassembly on page 39).
2. Remove the bottom cover (see Bottom cover on page 39).
3. Disconnect the battery cable from the system board (see Battery on page 49).

If you are replacing a memory module, remove the existing memory module:

1. Pull the protective shielding up from the top and toward you to access the memory modules.
2. Spread the two retention clips outward **(1)** until the memory module tilts up at a 45° angle, and then remove the module **(2)**. Use the same procedure to remove all memory modules.

IMPORTANT: To prevent damage to the memory module, hold the memory module by the edges only. Do not touch the components on the memory module.

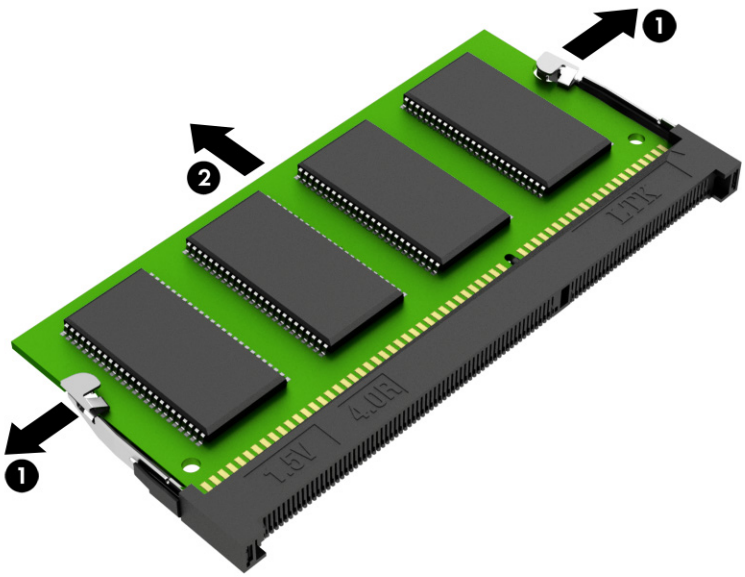

To protect a memory module after removal, place it in an electrostatic-safe container.

To install a memory module:

1. Align the notched edge of the module with the tab in the slot **(1)**, and then press the module into the slot at an angle until it is seated **(2)**.
2. Press down on both sides of the module until the side retention clips snap into place **(3)**.

IMPORTANT: Be sure to press down on both sides of the module using two fingers during installation. Failure to press on both sides might result in incorrect installation. Do not press down only in the middle of the module.

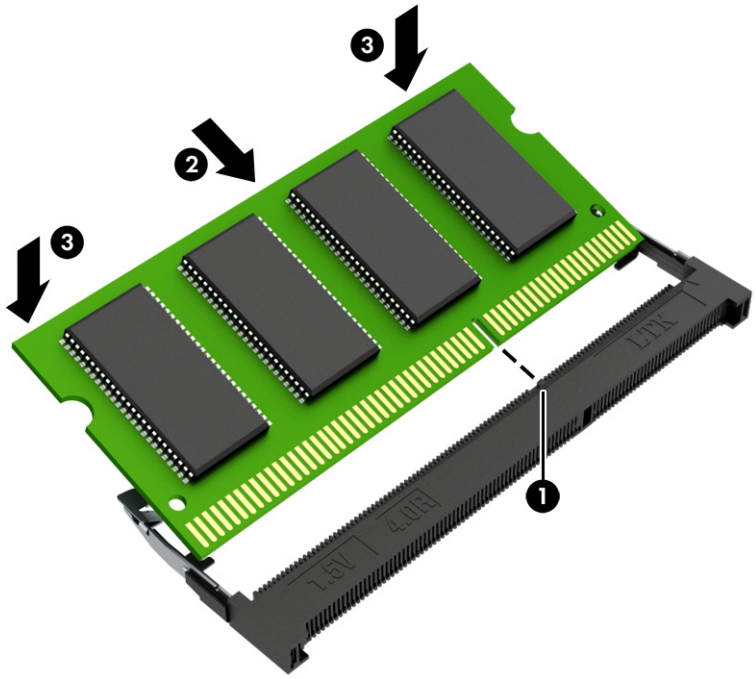

WLAN module

To remove the WLAN module, use this procedure and illustration.

Table 5-3 **WLAN module descriptions and part numbers**

Description	Spare part number
Mediatek RZ616 Wi-Fi 6E Bluetooth 5.3 AIM-T WLAN	N19618-001
Realtek 8852CE Wi-Fi 6E Bluetooth 5.3 WLAN	N22541-001

IMPORTANT: To prevent an unresponsive system, replace the wireless module only with a wireless module authorized for use in the computer by the governmental agency that regulates wireless devices in your country or region. If you replace the module and then receive a warning message, remove the module to restore device functionality, and then contact technical support.

Before removing the WLAN module, follow these steps:

1. Prepare the computer for disassembly (see Preparation for disassembly on page 39).
2. Remove the bottom cover (see Bottom cover on page 39).
3. Disconnect the battery cable from the system board (see Battery on page 49).

Remove the WLAN module:

1. Remove the plastic that covers the antennas.
2. Carefully disconnect the two antenna cables from the module **(1)**.

3. Remove the Phillips M2.0 × 2.5 screw **(2)**, and then remove the WLAN module **(3)**.

NOTE: The #1 white WLAN antenna cable connects to the WLAN module #1 Main terminal. The #2 black WLAN antenna cable connects to the WLAN module #1 Aux terminal.

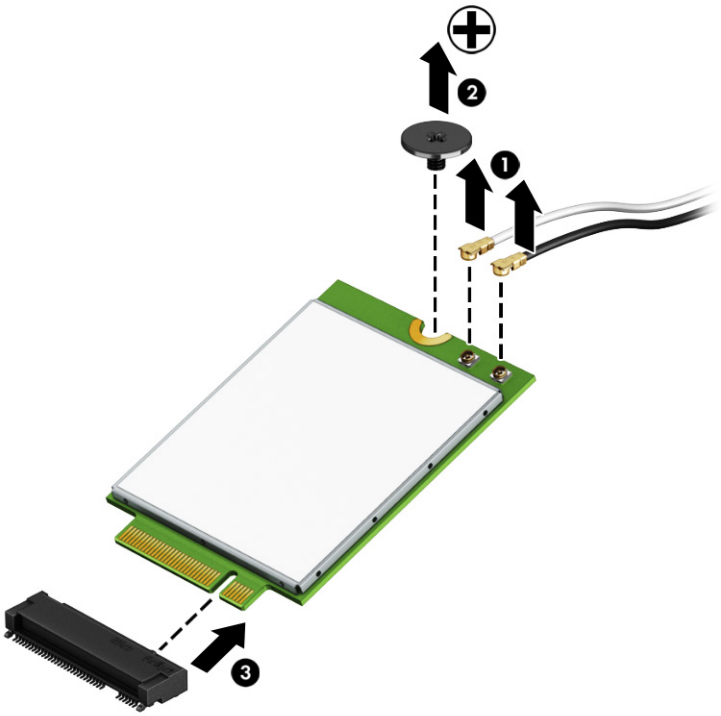

4. If the WLAN antenna is not connected to the terminal on the WLAN module, install a protective sleeve on the antenna connector, as shown in the following illustration.

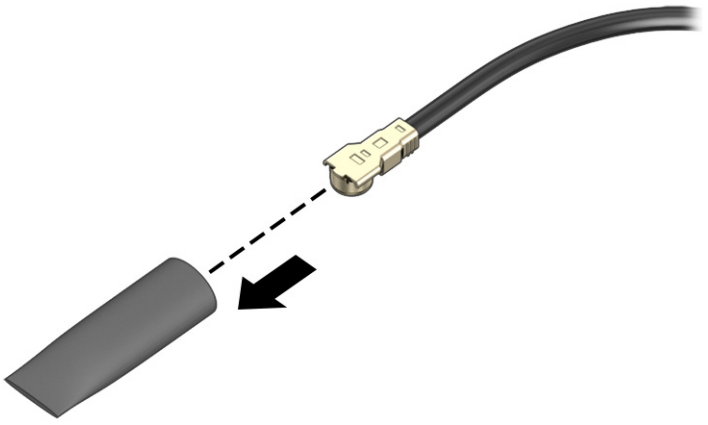

Reverse this procedure to install the WLAN module.

WWAN module

To remove the WWAN module, use this procedure and illustration.

Table 5-4 **WWAN module descriptions and part numbers**

Description	Spare part number
Intel XMM 7560 R + LTE-Advanced Pro WWAN (Cat 16)	N00182-001

IMPORTANT: To prevent an unresponsive system, replace the wireless module only with a wireless module authorized for use in the computer by the governmental agency that regulates wireless devices in your country or region. If you replace the module and then receive a warning message, remove the module to restore device functionality, and then contact technical support.

Before removing the WWAN module, follow these steps:

1. Prepare the computer for disassembly (see Preparation for disassembly on page 39).
2. Remove the bottom cover (see Bottom cover on page 39).
3. Disconnect the battery cable from the system board (see Battery on page 49).

Remove the WWAN module:

1. Remove the plastic that covers the antennas.
2. Disconnect the WWAN antenna cables **(1)** from the terminals on the WWAN module. The number of antenna cables can vary.
3. Remove the Phillips M2.0 × 2.5 screw **(2)** that secures the WWAN module to the bottom cover. (The WWAN module tilts up.)
4. Remove the WWAN module **(3)** by pulling the module away from the slot at an angle.

NOTE: Antenna cable colors might vary. Be sure to match the number on the cable with the number next to the connector on the module.

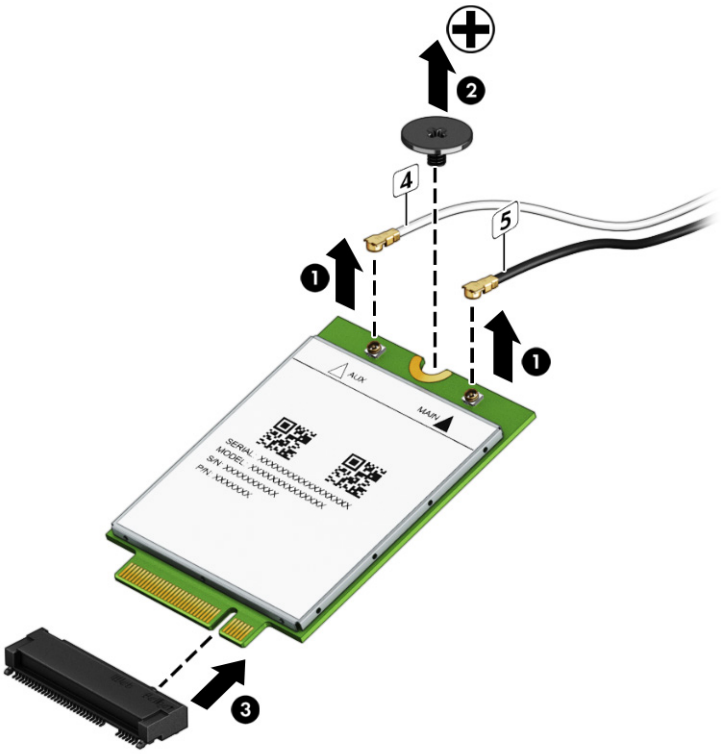

5. If the WWAN antenna is not connected to the terminal on the WWAN module, a protective sleeve must be installed on the antenna connector, as shown in the following illustration.

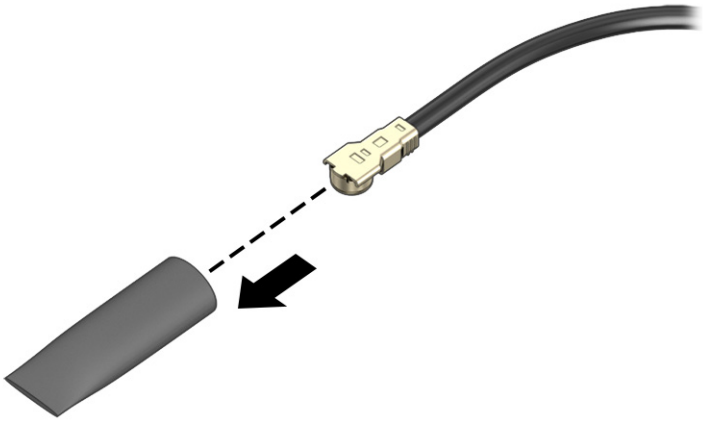

Reverse this procedure to install the WWAN module.

Solid-state drive

To remove the M.2 solid-state drive, use this procedure and illustration. Both M.2 2280 and M2.2230 drives are available.

Table 5-5 **Solid-state drive descriptions and part numbers**

Description	Spare part number
2 TB, TLC	M52027-001
1 TB, PCIe-4 × 4, TLC	N22908-001
1 TB, PCIe-4 × 4, TLC, self-encrypting drive (SED)	N24954-001
1 TB, TLC	M16560-001
1 TB, TLC, self-encrypting drive (SED)	M52033-001
512 GB, TLC	M17436-001
512 GB, self-encrypting drive (SED)	M52031-001
512 GB	N24955-001
256 GB, self-encrypting drive (SED)	N35225-001
Solid-state drive (PCIe, M2. 2230)	
256 GB	M11042-001
Solid-state drive support kit	N00354-001

Before removing the solid-state drive, follow these steps:

1. Prepare the computer for disassembly (see Preparation for disassembly on page 39).
2. Remove the bottom cover (see Bottom cover on page 39).
3. Disconnect the battery cable from the system board (see Battery on page 49).

Remove the solid-state drive:

1. Remove the Phillips M2.0 × 2.5 screw **(1)** that secures the drive to the computer.
2. Pull the drive away from the socket to remove it **(2)**.

Primary M.2 2280 solid-state drive

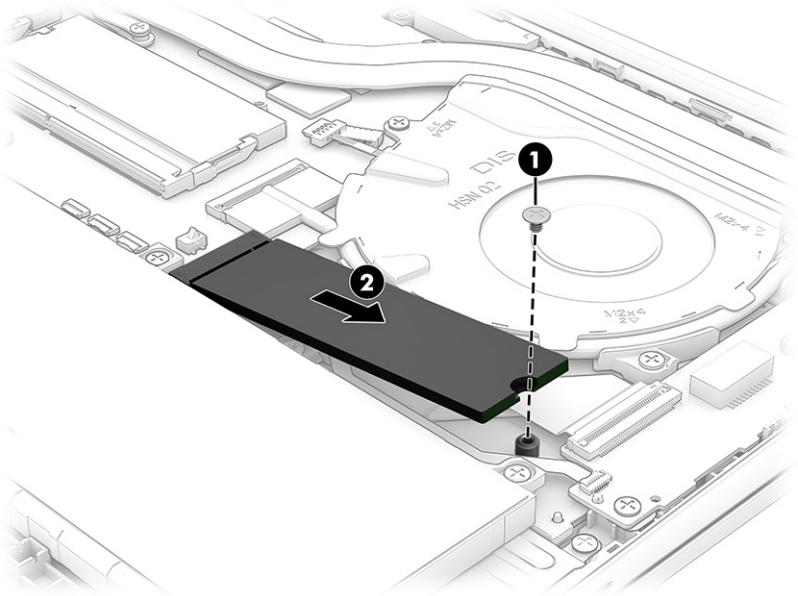

Secondary M.2 2230 solid-state drive

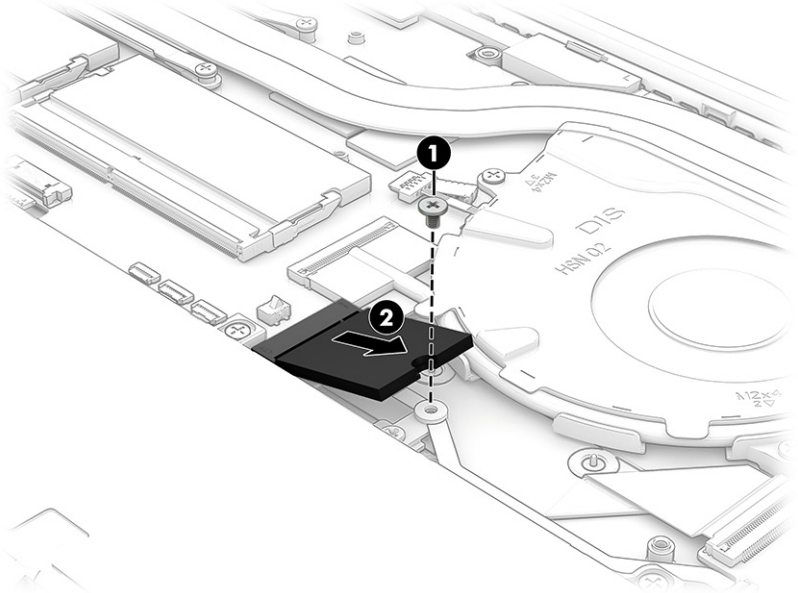

To install the solid-state drive, reverse the removal procedures.

NOTE: Solid-state drives are designed with a notch to prevent incorrect insertion.

6 Removal and replacement procedures for authorized service provider parts

This chapter provides removal and replacement procedures for authorized service provider parts.

IMPORTANT: Only an authorized service provider should access the components described in this chapter. Accessing these parts can damage the computer or void the warranty.

NOTE: Details about your computer, including model, serial number, product key, and length of warranty, are on the service tag at the bottom of your computer.

Component replacement procedures

To remove and replace computer components, use these procedures.

NOTE: HP continually improves and changes product parts. For complete and current information about supported parts for your computer, go to http://partsurfer.hp.com, select your country or region, and then follow the on-screen instructions.

You must remove, replace, or loosen as many as 53 screws when you service the parts described in this chapter. Make special note of each screw size and location during removal and replacement.

Preparation for disassembly

To remove and replace computer components, use these procedures:

For initial safety procedures, see Removal and replacement procedures preliminary requirements on page 30.

1. Turn off the computer. If you are unsure whether the computer is off or in Hibernation, turn the computer on, and then shut it down through the operating system.
2. Disconnect the power from the computer by unplugging the power cord from the computer.
3. Disconnect all external devices from the computer.

Battery

To remove the battery, use this procedure and illustration.

Table 6-1 Battery description and part number

Description	Spare part number
Battery, 3 cell, 51 Whr	M73472-005
Battery, 3 cell, 42 Whr	M75599-005

WARNING! To avoid personal injury and damage to the product:

- Do *not* puncture, twist, or crack the battery.
- Do *not* cause an external puncture or rupture to the battery. They can cause a short inside the battery, which can result in battery thermal runaway.
- Do *not* handle or touch the battery enclosure with sharp objects such as tweezers or pliers, which might puncture the battery.
- Do *not* compress or squeeze the battery case with tools or heavy objects stacked on top of the case. These actions can apply undue force on the battery.
- Do *not* touch the connectors with any metallic surface or object, such as metal tools, screws, or coins, which can cause shorting across the connectors.

Before removing the battery, follow these steps:

1. Prepare the computer for disassembly (see Preparation for disassembly on page 39).
2. Remove the bottom cover (see Bottom cover on page 39).

⚠ **WARNING!** To reduce potential safety issues, use only the user-replaceable battery provided with the computer, a replacement battery provided by HP, or a compatible battery purchased from HP.

IMPORTANT: Removing a battery that is the sole power source for the computer can cause loss of information. To prevent loss of information, save your work or shut down the computer through Windows before you remove the battery.

Remove the battery:

1. Disconnect the battery cable from the system board **(1)**.
2. Remove the six Phillips M2.0 × 4.0 screws **(2)** that secure the battery to the computer.
3. Remove the battery from the computer **(3)**.

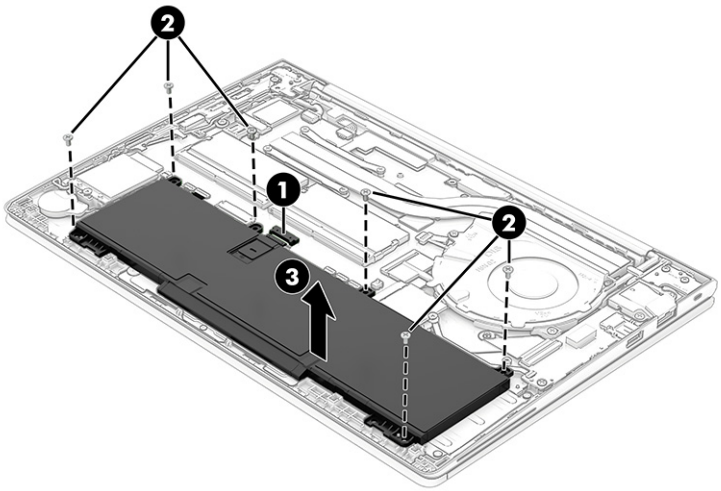

To insert the battery, reverse the removal procedures.

NOTE: When replacing the battery, plug in the battery power cable first, and then replace the screws.

RTC battery

To remove the RTC battery, use this procedure and illustration.

Table 6-2 RTC battery description and part number

Description	Spare part number
RTC battery	M34737-001

Before removing the RTC battery, follow these steps:

1. Prepare the computer for disassembly (see Preparation for disassembly on page 39).
2. Remove the bottom cover (see Bottom cover on page 39).
3. Disconnect the battery cable from the system board (see Battery on page 49).

Remove the RTC battery:

1. Disconnect the battery cable from the system board **(1)**.
2. Remove the cable from the clips on the computer chassis **(2)**.
3. Use a tool to release the battery from the computer **(3)**. The battery is secured with adhesive.

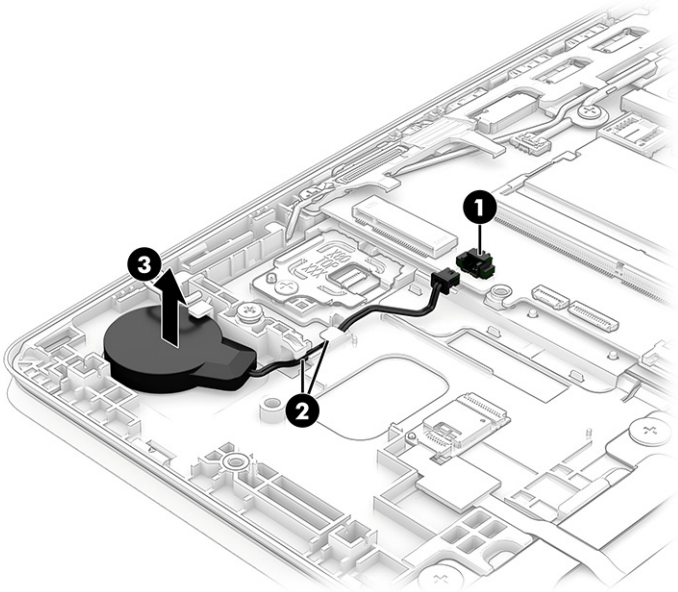

Reverse this procedure to install the RTC battery.

I/O board

To remove the I/O board, use this procedure and illustration.

Table 6-3 I/O board description and part number

Description	Spare part number
I/O board for use in models with AMD PRO processors	N40109-001
I/O board for use in models without AMD PRO processors	N40110-001
I/O board cables (included in Cable Kit)	N00097-001
RJ-45 (network) jack door	M21396-001

Before removing the I/O board, follow these steps:

1. Prepare the computer for disassembly (see Preparation for disassembly on page 39).
2. Remove the bottom cover (see Bottom cover on page 39).
3. Disconnect the battery cable from the system board (see Battery on page 49).

Remove the I/O board:

1. Disconnect the cables from the larger ZIF connector **(1)** and smaller ZIF connector **(2)** on the I/O board.
2. Remove the three Phillips M2.0 × 4.0 screws **(3)** that secure the board to the computer, and then remove the network jack door from the board **(4)**.
3. Remove the board from the computer **(5)**.

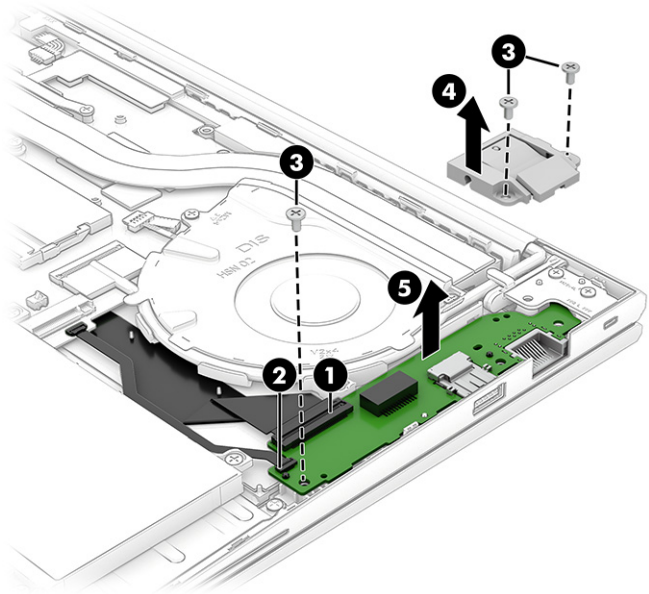

Reverse this procedure to install the I/O board.

Touchpad

To remove the touchpad, use this procedure and illustration.

Table 6-4 **Touchpad description and part number**

Description	Spare part number
Touchpad for use in models without NFC	N00096-001
Touchpad for use in models with NFC	M47178-001
Touchpad cable (included in Cable Kit)	N00097-001

Before removing the touchpad, follow these steps:

1. Prepare the computer for disassembly (see Preparation for disassembly on page 39).
2. Remove the bottom cover (see Bottom cover on page 39).
3. Remove the battery (see Battery on page 49).

Remove the touchpad:

1. Disconnect the system board cable from the ZIF connector on the touchpad **(1)**.
2. (Select models only) Disconnect the antenna cable from the ZIF connector on the NFC module **(2)**.
3. Remove the four Phillips M2.0× 2.0 screws **(3)** that secure the touchpad to the computer.
4. Remove the two Phillips M1.6 × 2.0 screws **(4)** that secure the touchpad to the computer.
5. Remove the touchpad from the computer **(5)**.

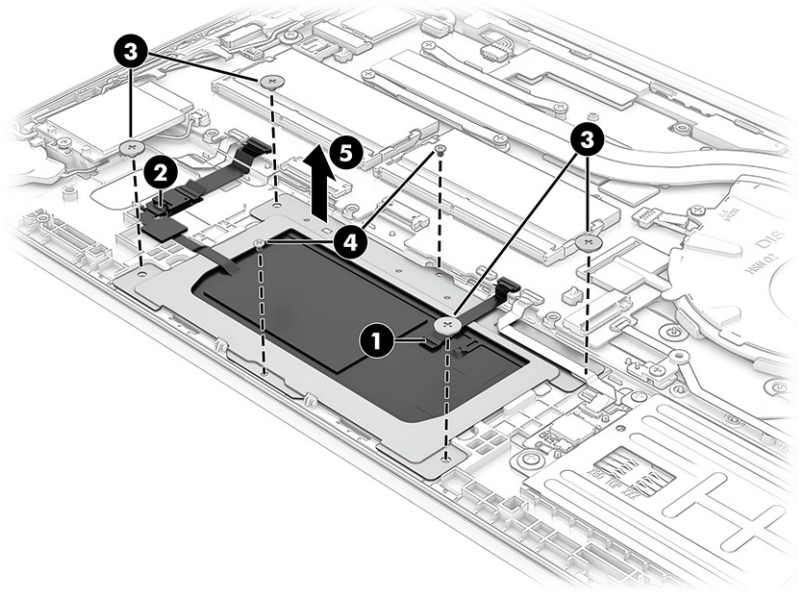

Reverse this procedure to install the touchpad.

NFC module

To remove the NFC module, use this procedure and illustration.

Table 6-5 **NFC module description and part number**

Description	Spare part number
NFC module	M27890-001
NOTE: The NFC module spare part kit does not include the antenna. The antenna is included in the touchpad spare part kit.	
NFC module cable (included in Cable Kit)	N00097-001

Before removing the NFC module, follow these steps:

1. Prepare the computer for disassembly (see Preparation for disassembly on page 39).
2. Remove the bottom cover (see Bottom cover on page 39).
3. Remove the battery (see Battery on page 49).

Remove the NFC module:

1. Remove any protective tape covering the module and reuse during replacement.
2. Disconnect the antenna cable from the ZIF connector on the NFC module **(1)**.
3. Disconnect the system board cable from the ZIF connector on the NFC module **(2)**.
4. Use a tool to release the module from the computer **(3)**. The NFC module is secured with adhesive.
5. Remove the NFC module from the computer **(4)**.

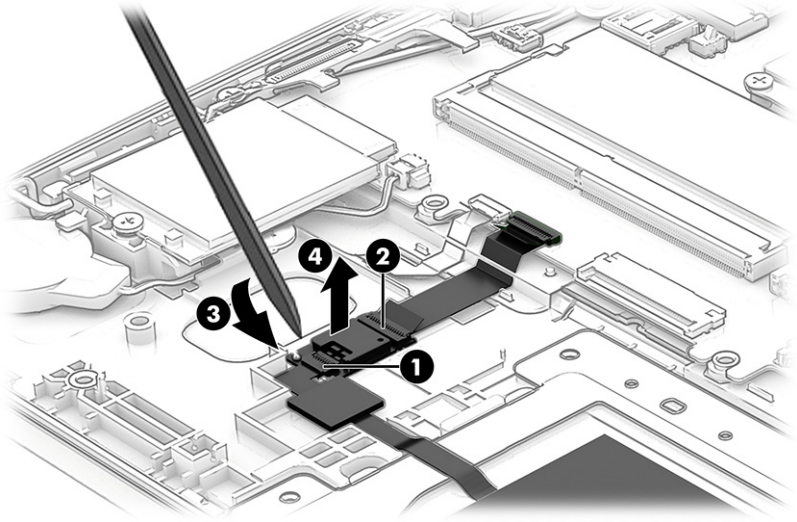

Reverse this procedure to install the NFC module.

Smart card reader

To remove the smart card reader from the top cover, use this procedure and illustration.

Table 6-6 **Smart card reader description and part number**

Description	Spare part number
Smart card reader	N12914-001

Before removing the smart card reader, follow these steps:

1. Prepare the computer for disassembly (see Preparation for disassembly on page 39).
2. Remove the bottom cover (see Bottom cover on page 39).
3. Remove the battery (see Battery on page 49).

Remove the smart card reader:

1. Remove the four Phillips M2.0 × 2.0 screws **(1)** from the card reader board.
2. Disconnect the cable from the card reader **(2)**.
3. Lift the smart card reader straight up to remove it **(3)**.

NOTE: The card reader is secured with adhesive. Carefully lift it straight up and off the pins to remove it

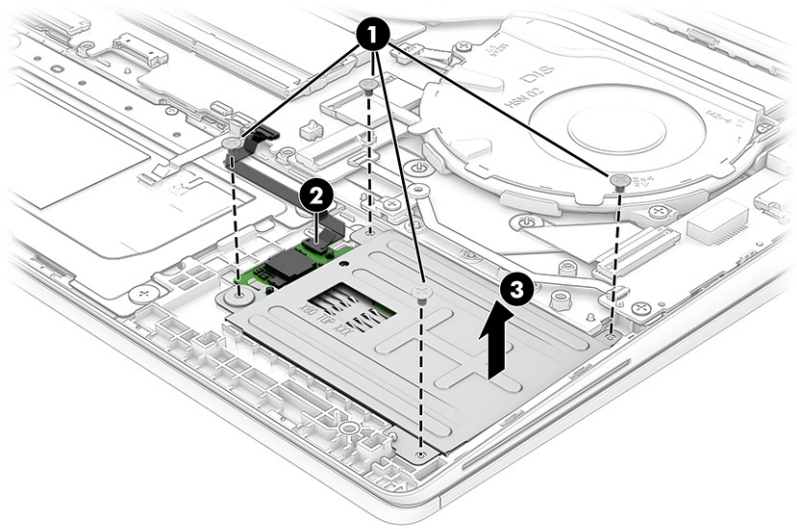

Reverse this procedure to install the smart card reader.

Fan

To remove the fan, use this procedure and illustration.

Table 6-7 **Fan description and part number**

Description	Spare part number
Fan	N00095-001

Before removing the fan, follow these steps:

1. Prepare the computer for disassembly (see Preparation for disassembly on page 39).
2. Remove the bottom cover (see Bottom cover on page 39).
3. Disconnect the battery cable from the system board (see Battery on page 49).

Remove the fan assembly:

1. Remove display cable from the clips on the fan **(1)**.
2. Remove the three Phillips 2.0 × 4.0 screws **(2)** that secure the fan to the computer.
3. Disconnect the fan cable from the system board **(3)**.
4. Remove the fan from the computer **(4)**.

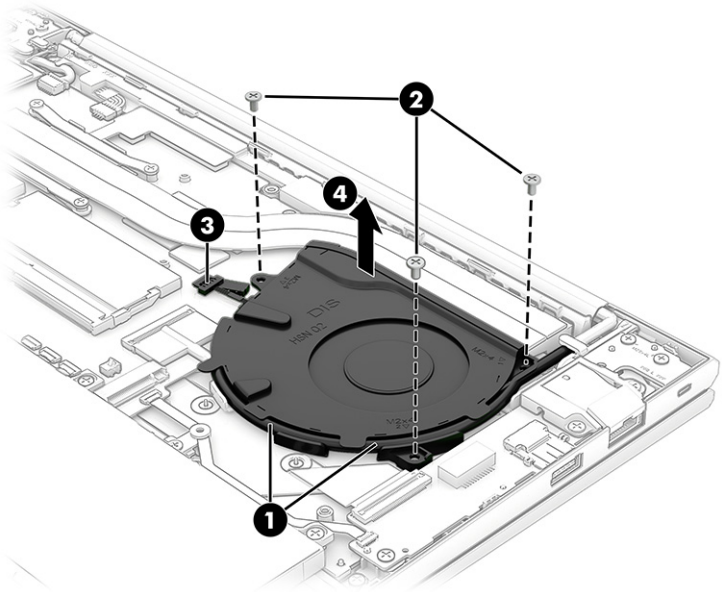

Reverse this procedure to install the fan assembly.

Fingerprint reader board

To remove the fingerprint reader board, use this procedure and illustration.

Table 6-8 Fingerprint reader board description and part number

Description	Spare part number
Fingerprint reader board	N00879-001
Fingerprint reader board cable (included in Cable Kit)	N00097-001
Fingerprint reader insert (for use in models without a fingerprint reader)	N38997-001
Fingerprint reader bracket (included in Bracket Kit)	M21372-001

Before removing the fingerprint reader board, follow these steps:

1. Prepare the computer for disassembly (see Preparation for disassembly on page 39).

2. Remove the bottom cover (see Bottom cover on page 39).
3. Disconnect the battery cable from the system board (see Battery on page 49).
4. Remove the WWAN module (see WWAN module on page 45).

Remove the fingerprint reader board:

1. Disconnect the cable from the ZIF connector on the fingerprint reader board **(1)**.
2. Remove the Phillips M2.0 × 2.5 screw **(2)** that secures the fingerprint reader bracket to the computer, and then remove the bracket **(3)**.
3. Remove the fingerprint reader board from the computer **(4)**.

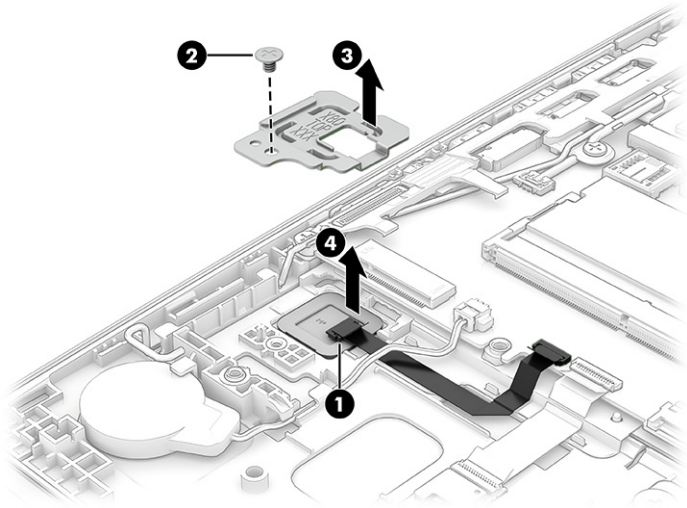

Reverse this procedure to install the fingerprint reader board.

Heat sink

To remove the heat sink, use these procedures and illustrations.

Table 6-9 Heat sink descriptions and part numbers

Description	Spare part number
Heat sink	M47406-001

Before removing the heat sink, follow these steps:

1. Prepare the computer for disassembly (see Preparation for disassembly on page 39).
2. Remove the bottom cover (see Bottom cover on page 39).
3. Disconnect the battery cable from the system board (see Battery on page 49).

Remove the heat sink:

1. In the order indicated on the heat sink, loosen the four captive Phillips screws **(1)** that secure the heat sink to the computer.

2. Remove the heat sink from the computer **(2)**.

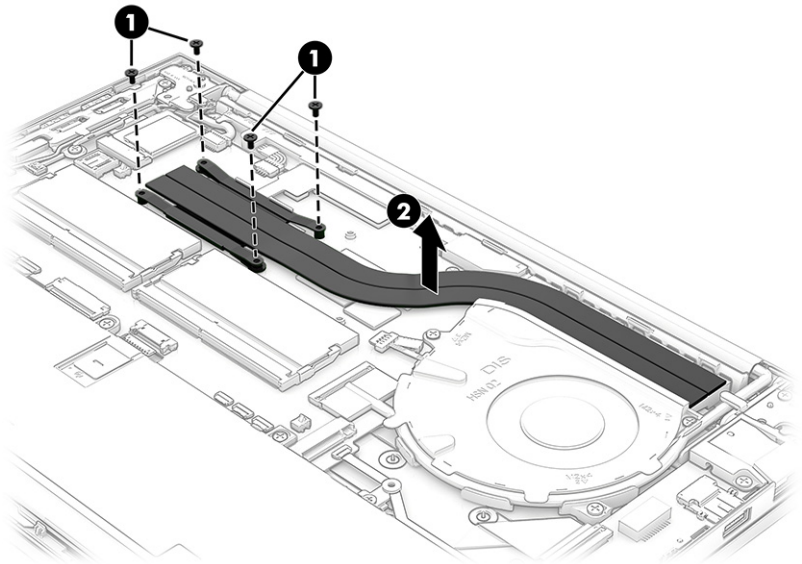

3. Thoroughly clean the thermal material from the surfaces of the heat sink and the system board components each time the heat sink is removed. Replacement thermal material is included with the heat sink and system board spare part kits. The following illustration shows the replacement thermal material locations.

   Thermal material is used on the heat sink **(1)** and associated system board component **(2)**.

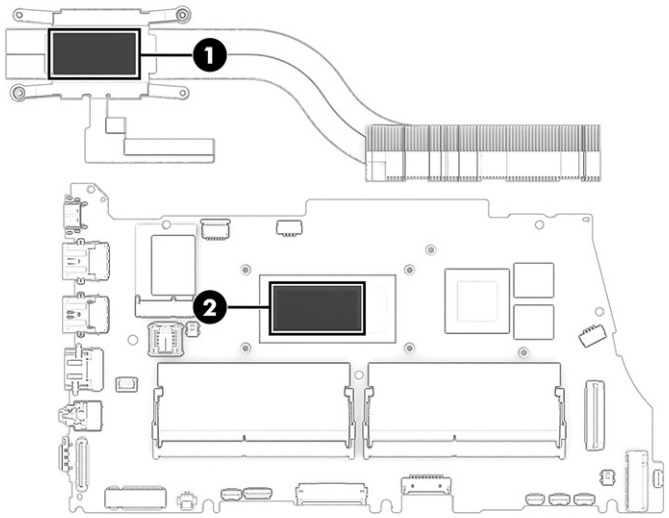

Reverse this procedure to install the heat sink.

System board

To remove the system board, use these procedures and illustrations.

Table 6-10 **System board descriptions and part numbers**

Description	Spare part number
System board (includes integrated processor)	
All system boards use the following part numbers:	
xxxxxx-001: Non-Windows operating systems	
xxxxxx-601: Windows operating system	
The system board support repair kit is available as spare part number N43785-888.	
AMD Ryzen 7 7730U processor	N41840-xx1
AMD Ryzen 7 7730U processor, models with a 5 MP IR camera	N41845-xx1
AMD Ryzen 7 7730U processor and WWAN	N41846-xx1
AMD Ryzen 7 PRO 7730U processor and WWAN	N41847-xx1
AMD Ryzen 7 7730U processor, models with a 5 MP IR camera and WWAN	N54413-xx1
AMD Ryzen 5 7530U processor	N41841-xx1
AMD Ryzen 5 7530U processor, models with a 5 MP IR camera	N41838-xx1
AMD Ryzen 5 7530U processor and WWAN	N41839-xx1
AMD Ryzen 5 PRO 7530U processor	N41844-xx1
AMD Ryzen 5 PRO 7530U processor, models with a 5 MP IR camera	N41842-xx1
AMD Ryzen 5 PRO 7530U processor and WWAN	N41843-xx1
AMD Ryzen 5 PRO 7530U, models with a 5 MP IR camera and WWAN	N54414-xx1
AMD Ryzen 3 7330U processor	N41837-xx1
AMD Ryzen 3 7330U processor, models with a 5 MP IR camera	N41835-xx1
AMD Ryzen 3 7330U processor and WWAN	N41836-xx1

Before removing the system board, follow these steps:

1. Prepare the computer for disassembly (see Preparation for disassembly on page 39).
2. Remove the bottom cover (see Bottom cover on page 39).
3. Remove the battery (see Battery on page 49).
4. Remove the fan (see Fan on page 55).

When you replace the system board, be sure to remove the following components (as applicable) from the defective system board and install them on the replacement system board:

- Memory modules (see Memory modules on page 41).
- WLAN module (see WLAN module on page 43).
- WWAN module (see WWAN module on page 45).
- Solid-state drive (see Solid-state drive on page 46).
- Heat sink (see Heat sink on page 57).

Remove the system board:

1. Disconnect the following cables from the system board:

NOTE: You should never disconnect the RTC battery cable from the system board.

- Antenna cables from the WLAN module (select products only) **(1)**
- Power connector cable **(2)**
- Speaker cable **(3)**
- Display cable (ZIF) **(4)**
- USB cable (ZIF) from USB board **(5)**
- USB cable (ZIF) from system board **(6)**
- Touchpad cable (ZIF) **(7)**
- Keyboard backlight cable (ZIF) (select products only) **(8)**
- Keyboard cable (reverse ZIF) **(9)**
- Fingerprint reader cable (ZIF) (select products only) **(10)**
- **Important: Do not disconnect** the RTC battery cable **(11)**
- Antenna cables from the WWAN module (select products only) **(12)**

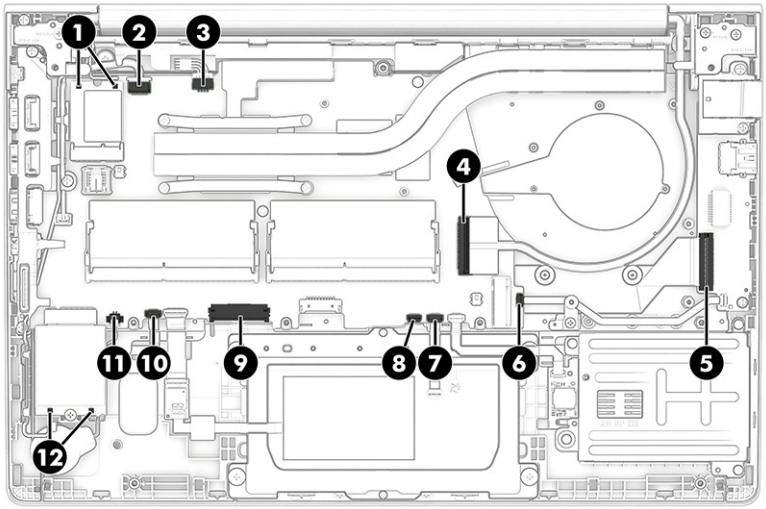

2. Remove the port bracket **(1)**, by removing the three Phillips M2.5 × 4.0 screws **(2)** that secure the bracket to the system board, and then removing the bracket **(3)**.

NOTE: The bracket is available in the Plastics Kit as spare part number N38997-001.

3. Remove the two Phillips M2.0 × 2.5 screws **(4)** that secure the system board to the computer.

4. Lift the side of the system board upward **(5)**, and then pull the system board away from the connectors on the side of the computer to remove it **(6)**.

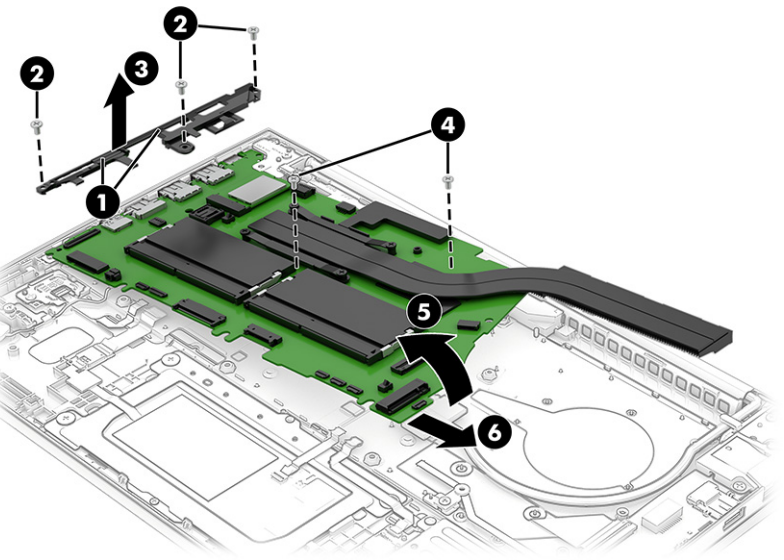

Reverse this procedure to install the system board.

Speaker

To remove the speaker, use this procedure and illustration.

Table 6-11 Speaker description and part number

Description	Spare part number
Speaker	M21400-001

Before removing the speaker, follow these steps:

1. Prepare the computer for disassembly (see Preparation for disassembly on page 39).
2. Remove the bottom cover (see Bottom cover on page 39).
3. Remove the battery (see Battery on page 49).
4. Remove the fan (see Fan on page 55).
5. Remove the system board (see System board on page 58).

NOTE: Be sure that the RTC battery remains connected to the system board.

Remove the speaker:

1. Remove the Phillips M2.0 × 2.0 screw **(1)** that secures the speaker to the computer.

2. Lift the speaker up and out of the computer **(2)**. When installing the speaker, be sure that the rubber cap is installed on the right end of the speaker **(3)** .

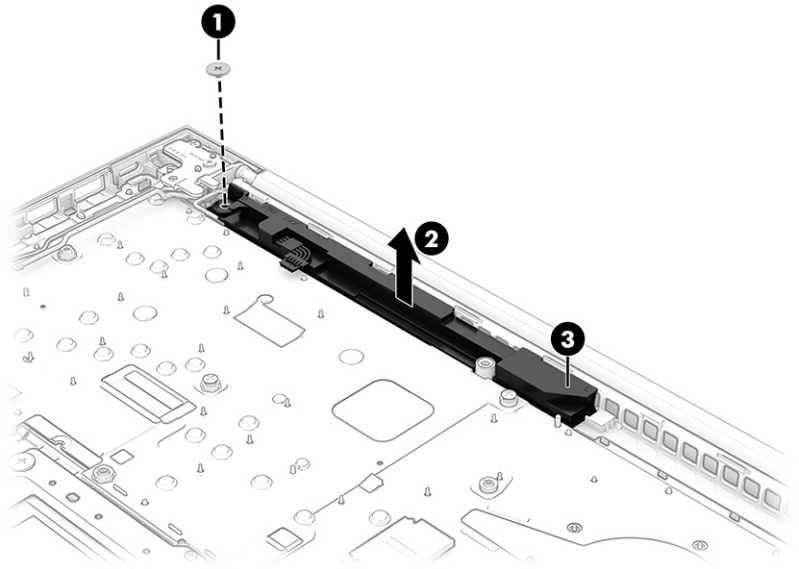

Reverse this procedure to install the speaker.

Power connector cable

To remove the power connector cable, use this procedure and illustration.

Table 6-12 Power connector cable description and part number

Description	Spare part number
Power connector cable	M21725-001

Before removing the power connector cable, follow these steps:

1. Prepare the computer for disassembly (see Preparation for disassembly on page 39).
2. Remove the bottom cover (see Bottom cover on page 39).
3. Disconnect the battery cable from the system board (see Battery on page 49).

Remove the power connector cable:

1. Move the antenna cables that route over the screws **(1)**.
2. Remove the three Phillips M2.5 × 4.0 screws **(2)** that secure the right display hinge to the computer, and then rotate the hinge off the power connector **(3)**.
3. Disconnect the cable from the system board **(4)**.

4. Remove the power connector cable from the computer **(5)**.

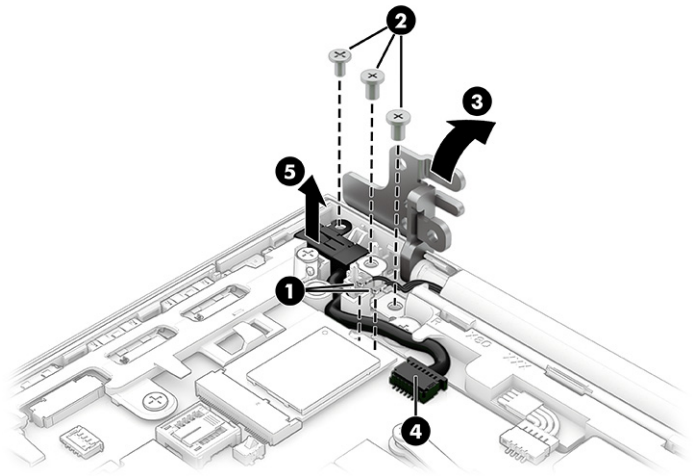

Reverse this procedure to install the power connector cable.

Display assembly

To remove and disassemble the display assembly, use these procedures and illustrations.

Full hinge-up displays are not available as spare parts. Spare parts for displays are available only at the subcomponent level.

Before removing the display panel, follow these steps:

1. Prepare the computer for disassembly (see Preparation for disassembly on page 39).
2. Remove the bottom cover (see Bottom cover on page 39).
3. Disconnect the battery cable from the system board (see Battery on page 49).
4. Remove the power connector cable (see Power connector cable on page 62).

Remove the display assembly:

1. Disconnect the display cable **(1)**, and then remove the cable from the clips around the fan **(2)**.
2. Disconnect the antenna cables from the WLAN module **(3)**.

3. (Select models only) Disconnect the antenna cables from the WWAN module **(4)**, and then remove the cables from the clips **(5)**.

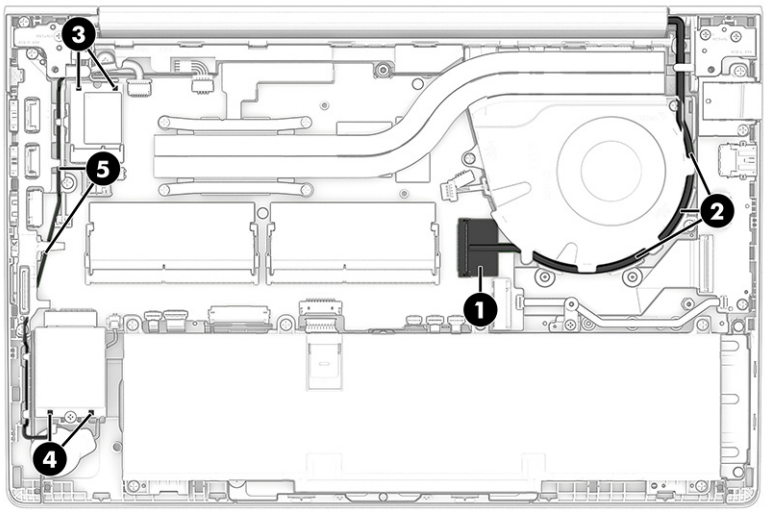

4. Remove the five Phillips M2.5 × 4.0 screws **(1)** that secure the display assembly to the computer.
5. Rotate the display to open the hinges **(2)**.
6. Separate the display assembly from the computer **(3)**.

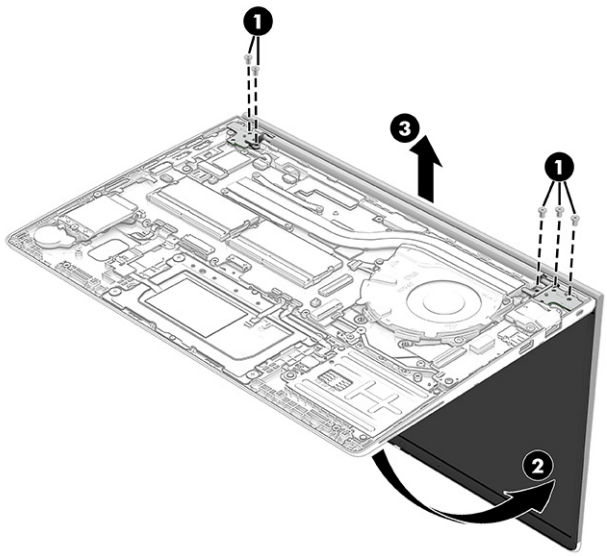

7. To remove the bezel:
   a. Flex the top **(1)**, the left and right sides **(2)**, and then the bottom of the bezel **(3)** to release it.
   b. Remove the bezel from the display **(4)**.

   The display bezel is available as the following spare part numbers:

   N00101-001: Models with an FHD display without a camera

N00099-001: Models with an FHD display with an HD camera

N00100-001: Models with an FHD display with an IR camera

N44236-001: Models with an FHD display and 5 MP camera

N00102-001: Models with an FHD privacy display with an IR camera

N07340-001: Models with an HD display without a camera

N07339-001: Models with an HD display with an HD camera

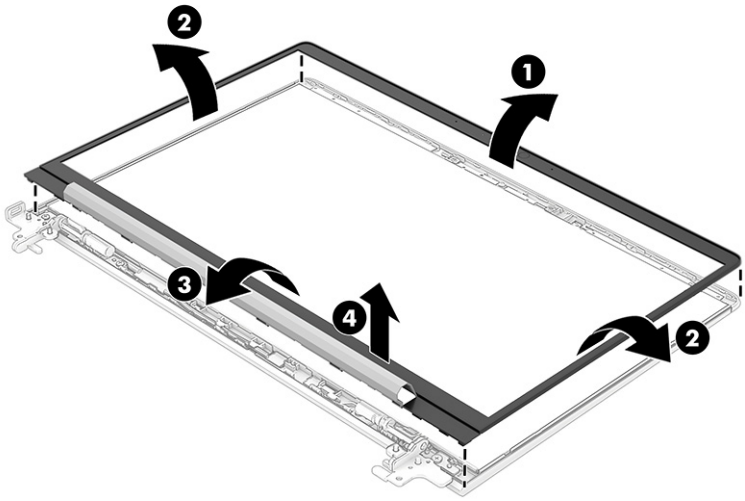

8. To remove the display panel:

   a. The display panel is secured to the display enclosure with tape that is installed under the sides of the panel. To remove the panel, from all four corners, use tweezers to grasp and pull the end of the tape out from behind the panel **(1)**. While turning the tweezers, wrap the tape around them **(2)** as you continue to pull the tape out from behind the display panel **(3)**. You must pull the tape multiple times before it is completely removed.

   b. Rotate the display panel over and place it next to the display enclosure **(4)**.

      Display panels are available as the following spare part numbers:

      N42803-001: FHD, 400 nit panel

      N42802-001: FHD, 250 nit panel

      N00080-001: FHD, 250 nit panel, touch screen

      N00079-001: FHD, privacy

      N00083-001: HD, 250 nit panel

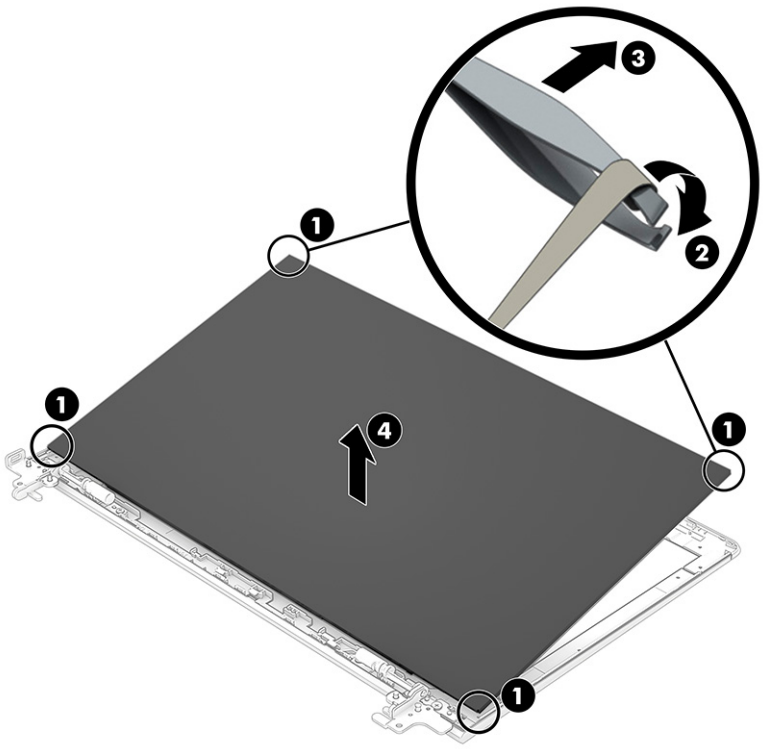

c. Lift the tape from the connector on the display panel **(1)**, and then disconnect the cable from the panel **(2)**.

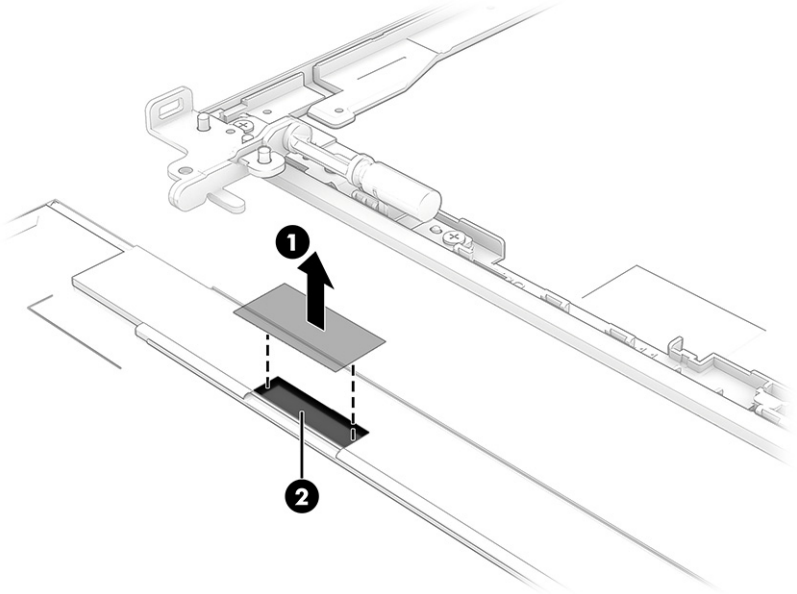

9. When replacing the display panel, follow these steps:

IMPORTANT: Before installing the display panel, be sure to install the display cable to the back of the panel.

a. Peel the protective layer from the bottom of the adhesive strips **(1)**.

b. Starting near the bottom of the inside of the display back cover **(2)**, install the adhesive strips on both the left and right sides by aligning them with the groove on the edge of cover **(3)**.

c. Peel the protective layer from the top of the adhesive strips **(4)**.

d. Align the top left of the panel with the top left of the display rear cover **(5)**, and then place the panel onto the cover **(6)**.

The double-sided adhesive strips are available as spare part number N39006-001.

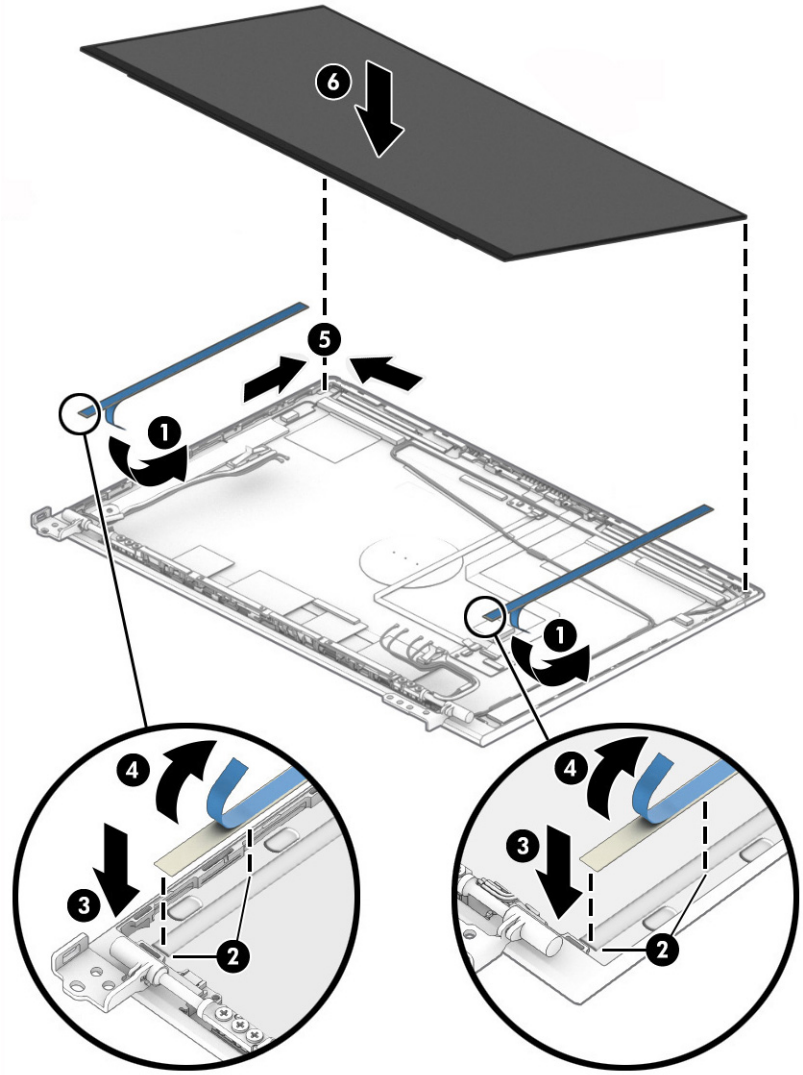

e. Replace the bezel by pressing along the bottom, sides, and then top of the bezel to snap it into place.

f. Position the computer upside down on a table.

g. Leave the computer upside down on the table for 20 minutes to allow the adhesive to set.

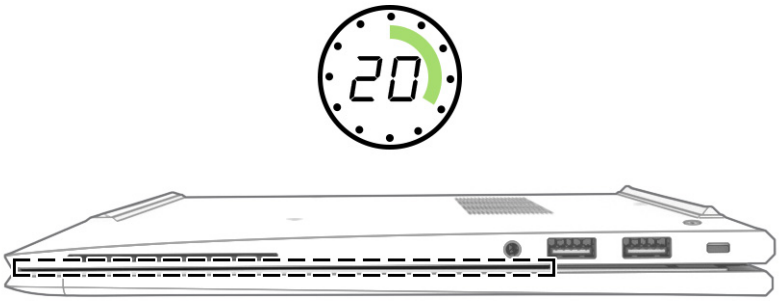

h. Position the computer upright on a table.

i. Leave the computer upright on the table for 10 minutes to be sure that the panel sits correctly in the display.

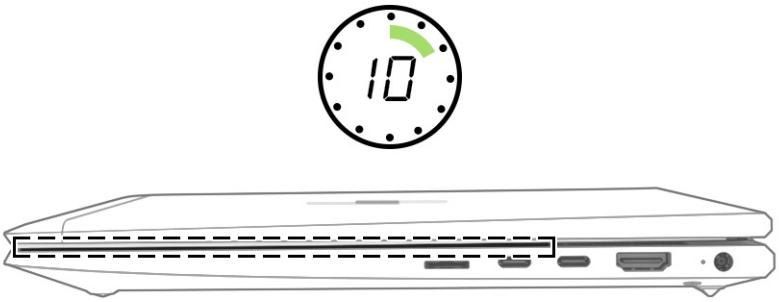

10. To remove the camera module:

- Use a tool to lift up evenly across the module and peel the module up from the display back cover **(1)**, and then disconnect the cable or cables from the reverse ZIF connector on the module **(2)**. The camera module is available as spare part number N39013-001 for HD cameras, N00112-001 for HD + IR cameras, and N39014-001 for 5 MP cameras. The microphone module is available as spare part number N39015-001.

NOTE: For installation, note that the cable routes under the camera module before it connects to the module.

An HD camera is shown in the following illustration.

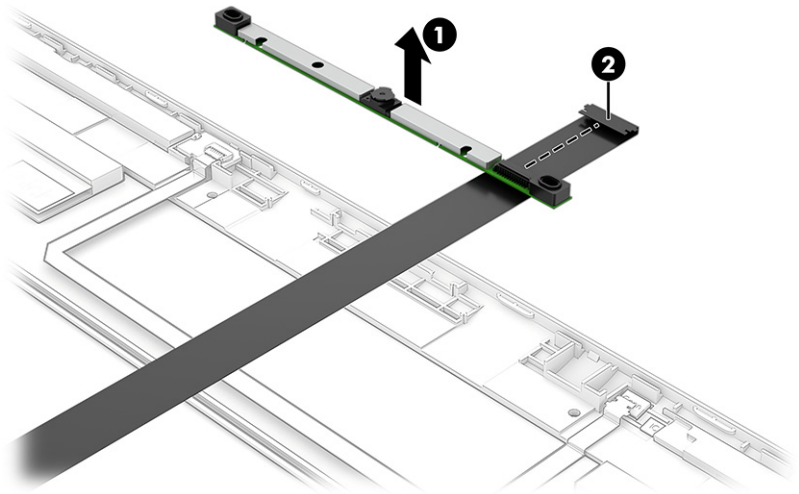

11. To remove the hinges from the display enclosure:

    a. Remove the two trim pieces **(1)**.

    b. Remove the two Phillips M2.5 × 2.5 screws **(2)** from each hinge.

    c. Remove the Phillips M2.5 × 4.0 screw **(3)** from each hinge.

    d. Remove the hinges from the display **(4)**.

    The hinges and associated parts are available in the Hinge Kit as spare part number N39016-001.

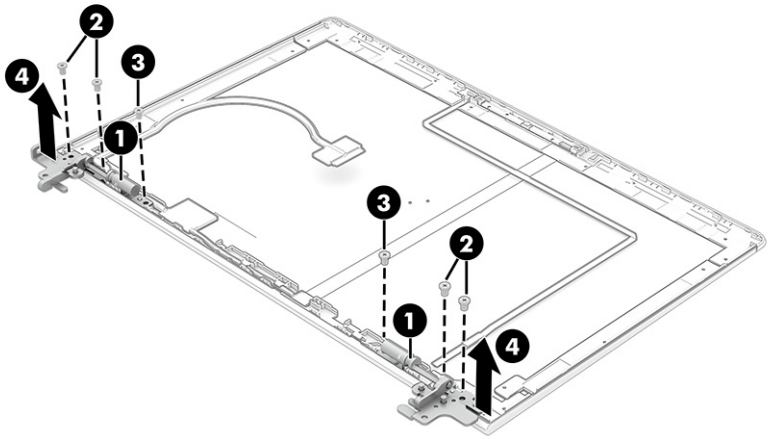

12. To remove the ambient light sensor board, disconnect the cable from the ZIF connector on the sensor **(1)**, and then use a tool **(2)** to release the board from the display **(3)**.

    The ambient light sensor is available as spare part number N00883-001. The ambient light cable is available in the display cable kit as spare part number N00098-001.

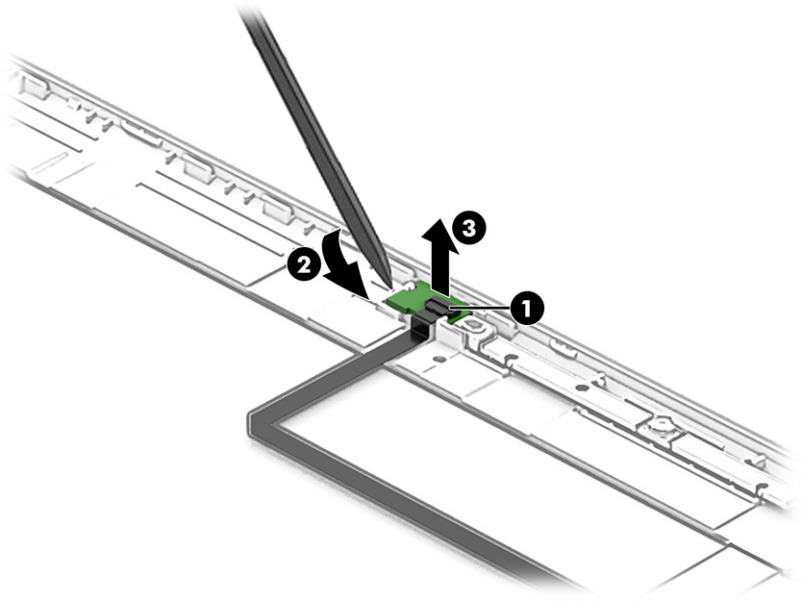

13. To remove the display panel/camera cable, peel the cable up off the inside of the display rear cover.

    The display panel/camera cable is available as spare part number N39012-001.

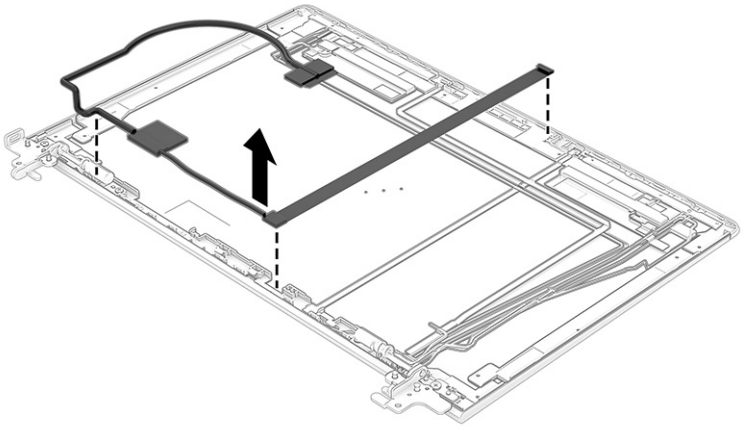

14. To remove the WLAN antennas and cables, remove the cables from the plastic clips at the bottom-right and the clips on the inside of the display rear cover **(1)**, and then peel the antennas off the cover **(2)**. The WLAN antennas and cables are available as spare part number N39003-001.

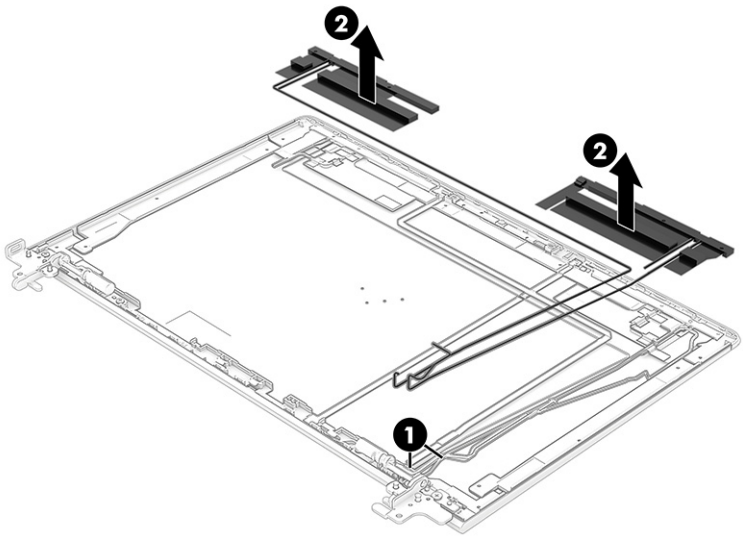

15. To remove the WWAN antennas and cables, remove the cables **(1)** from the inside of the display rear cover **(2)**, and then peel the antennas off the cover **(3)**. The WWAN antennas and cables are available as spare part number N39005-001 for models with a 3 mm panel and N44235-001 for models with a 2 mm panel.

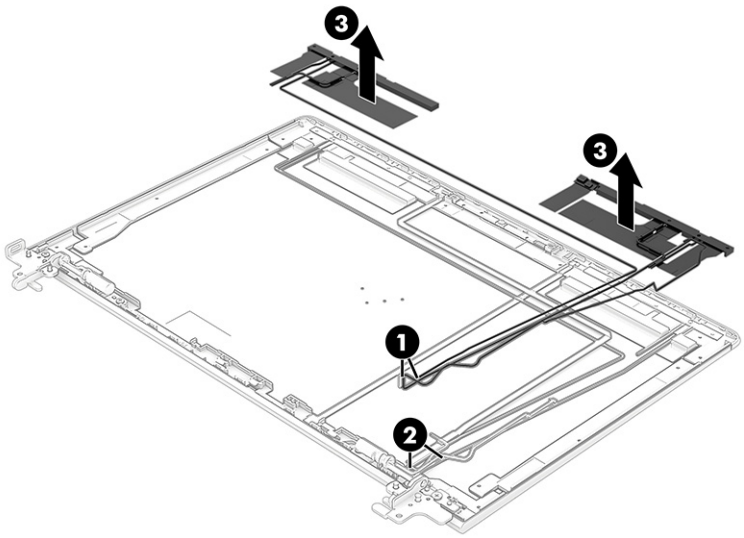

Display rear covers are available as the following spare part numbers:

N44240-001: Models with a 250 nit panel and a 5 MP IR camera

N44237-001: Models with a 400 nit panel and a 5 MP IR camera

N00106-001: Models with WWAN, 3 mm display

N44239-001: Models with 400 nit panel, WWAN

N44241-001: Models with a privacy display

Reverse this procedure to reassemble and replace the display assembly.

Top cover with keyboard

The top cover with keyboard remains after removing all other spare parts from the computer. In this section, the first table provides the main spare part number for the top covers with keyboards. The second table provides the country codes.

NOTE: When replacing the top cover with keyboard, be sure to remove the smart card reader from the old top cover and install the reader onto the new top cover.

Table 6-13 Top cover with keyboard descriptions and part numbers

Description	Spare part number
Top cover with keyboard, backlit	N40111-xxx
Top cover with keyboard, not backlit	N40113-xxx
Top cover with keyboard, privacy	N40112-xxx

Table 6-14 Spare part country codes

For use in country or region	Spare part number	For use in country or region	Spare part number	For use in country or region	Spare part number
Belgium	-A41	Hungary	-211	Saudi Arabia	-171
Brazil	-201	Iceland	-DD1	Slovenia	-BA1
Bulgaria	-261	India	-D61	South Korea	-AD1
Chile	-161	Israel	-BB1	Spain	-071
Czech Republic/Slovakia	-FL1	Italy	-061	Switzerland	-BG1
Denmark	-081	Japan	-291	Taiwan	-AB1
Denmark, Finland, and Norway	-DH1	The Netherlands	-B31	Thailand	-281
French Canada	-DB1	Northern Africa	-FP1	Turkey	-141
Finland/Sweden	-B71	Norway	-091	Turkey-F	-541
France	-051	Portugal	-131	Ukraine	-BD1
Germany	-041	Romania	-271	United Kingdom	-031
Greece	-151	Russia	-251	United States	-001

7 Backing up, restoring, and recovering

You can use Windows tools or HP software to back up your information, create a restore point, reset your computer, create recovery media, or restore your computer to its factory state. Performing these standard procedures can return your computer to a working state faster.

IMPORTANT: If you are performing recovery procedures on a tablet, the tablet battery must be at least 70% charged before you start the recovery process.

IMPORTANT: For a tablet with a detachable keyboard, connect the tablet to the keyboard base before beginning any recovery process.

Backing up information and creating recovery media

These methods of creating recovery media and backups are available on select products only.

Using Windows tools for backing up

HP recommends that you back up your information immediately after initial setup. You can do this task either using Windows Backup locally with an external USB flash drive or using online tools.

NOTE: If computer storage is 32 GB or less, Microsoft® System Restore is disabled by default.

Using the HP Cloud Recovery Download Tool to create recovery media (select products only)

You can use the HP Cloud Recovery Download Tool to create HP Recovery media on a bootable USB flash drive.

For details:

- Go to http://www.hp.com, search for HP Cloud Recovery, and then select the result that matches the type of computer that you have.

NOTE: If you cannot create recovery media yourself, contact support to obtain recovery discs. Go to http://www.hp.com/support, select your country or region, and then follow the on-screen instructions.

IMPORTANT: HP recommends that you follow the Restoring and recovery methods on page 74 to restore your computer before you obtain and use the HP recovery discs. Using a recent backup can return your machine to a working state sooner than using the HP recovery discs. After the system is restored, reinstalling all the operating system software released since your initial purchase can be a lengthy process.

Restoring and recovering your system

You have several tools available to recover your system both within and outside of Windows if the desktop cannot load.

HP recommends that you attempt to restore your system using the Restoring and recovery methods on page 74.

Creating a system restore

System Restore is available in Windows. The System Restore software can automatically or manually create restore points, or snapshots, of the system files and settings on the computer at a particular point.

When you use System Restore, it returns your computer to its state at the time you made the restore point. Your personal files and documents should not be affected.

Restoring and recovery methods

After you run the first method, test to see whether the issue still exists before you proceed to the next method, which might now be unnecessary.

1. Run a Microsoft System Restore.
2. Run Reset this PC.

NOTE: The options **Remove everything** and then **Fully clean the drive** can take several hours to complete and leave no information on your computer. It is the safest way to reset your computer before you recycle it.

3. Recover using HP Recovery media. For more information, see Recovering using HP Recovery media on page 74.

For more information about the first two methods, see the Get Help app:

- Select the **Start** button, select **All apps**, select the **Get Help** app, and then enter the task you want to perform.

NOTE: You must be connected to the internet to access the Get Help app.

Recovering using HP Recovery media

You can use HP Recovery media to recover the operating system and drivers that were installed at the factory. On select products, you can create recovery media on a bootable USB flash drive using the HP Cloud Recovery Download Tool.

For details, see Using the HP Cloud Recovery Download Tool to create recovery media (select products only) on page 73.

NOTE: If you cannot create recovery media yourself, contact support to obtain recovery discs. Go to http://www.hp.com/support, select your country or region, and then follow the on-screen instructions.

To recover your system:

- Insert the HP Recovery media, and then restart the computer.

NOTE: HP recommends that you follow the Restoring and recovery methods on page 74 to restore your computer before you obtain and use the HP recovery discs. Using a recent backup can return your machine to a working state sooner than using the HP recovery discs. After the system is restored, reinstalling all the operating system software released since your initial purchase can be a lengthy process.

Changing the computer boot order

If your computer does not restart using the HP Recovery media, you can change the computer boot order, which is the order of devices listed in BIOS for startup information. You can select an optical drive or a USB flash drive, depending on the location of your HP Recovery media.

IMPORTANT: For a tablet with a detachable keyboard, connect the tablet to the keyboard base before beginning these steps.

To change the boot order:

1. Insert the HP Recovery media.
2. Access the system **Startup** menu.
   - For computers or tablets with keyboards attached, turn on or restart the computer or tablet, quickly press esc, and then press f9 for boot options.
   - For tablets without keyboards, turn on or restart the tablet, quickly press and hold the volume up button, and then select **f9**.

     – or –

     Turn on or restart the tablet, quickly press and hold the volume down button, and then select **f9**.
3. Select the optical drive or USB flash drive from which you want to boot, and then follow the on-screen instructions.

Using HP Sure Recover (select products only)

Select computer models are configured with HP Sure Recover, a PC operating system (OS) recovery solution built into the hardware and software. HP Sure Recover can fully restore the HP OS image without installed recovery software.

Using HP Sure Recover, an administrator or user can restore the system and install:

- Latest version of the operating system
- Platform-specific device drivers
- Software applications, in the case of a custom image

To access the latest documentation for HP Sure Recover, go to http://www.hp.com/support. Follow the on-screen instructions to find your product and locate your documentation.

8 Computer Setup (BIOS), TPM, and HP Sure Start

HP provides several tools to help set up and protect your computer.

Using Computer Setup

Computer Setup, or Basic Input/Output System (BIOS), controls communication between all the input and output devices on the system (such as hard drives, display, keyboard, mouse, and printer). Computer Setup includes settings for types of devices installed, the startup sequence of the computer, and amount of system and extended memory.

NOTE: Use extreme care when making changes in Computer Setup. Errors can prevent the computer from operating properly.

To start Computer Setup, turn on or restart the computer, and when the HP logo appears, press f10 to enter Computer Setup.

Navigating and selecting in Computer Setup

You can navigate and select in Computer Setup using one or more methods.

- To select a menu or a menu item, use the tab key and the keyboard arrow keys and then press enter, or use a pointing device to select the item.
- To scroll up and down, select the up arrow or the down arrow in the upper-right corner of the screen, or use the up arrow key or the down arrow key on the keyboard.
- To close open dialog boxes and return to the main Computer Setup screen, press esc, and then follow the on-screen instructions.

To exit Computer Setup, choose one of the following methods:

- To exit Computer Setup menus without saving your changes, select **Main**, select **Ignore Changes and Exit**, and then select **Yes**.

NOTE: If you are using arrow keys to highlight your choice, you must then press enter.

- To save your changes and exit Computer Setup menus, select **Main**, select **Save Changes and Exit**, and then select **Yes**.

NOTE: If you are using arrow keys to highlight your choice, you must then press enter.

Your changes go into effect when the computer restarts.

Restoring factory settings in Computer Setup

To return all settings in Computer Setup to the values that were set at the factory, follow these steps.

NOTE: Restoring defaults will not change the hard drive mode.

1. Start Computer Setup. See Using Computer Setup on page 76.
2. Select **Main**, select **Apply Factory Defaults and Exit**, and then select **Yes**.

NOTE: If you are using arrow keys to highlight your choice, you must then press enter.

NOTE: On select products, the selections might display **Restore Defaults** instead of **Apply Factory Defaults and Exit**.

Your changes go into effect when the computer restarts.

NOTE: Your password settings and security settings are not changed when you restore the factory settings.

Updating the BIOS

Updated versions of the BIOS might be available on the HP website. Most BIOS updates on the HP website are packaged in compressed files called *SoftPaqs*.

Some download packages contain a file named Readme.txt, which contains information regarding installing and troubleshooting the file.

Determining the BIOS version

To decide whether you need to update Computer Setup (BIOS), first determine the BIOS version on your computer.

If you are already in Windows, you can access BIOS version information (also known as *ROM date* and *System BIOS*) by pressing fn+esc (select products only). Or you can use Computer Setup.

1. Start Computer Setup. See Using Computer Setup on page 76.
2. Select **Main**, and then select **System Information**.
3. To exit Computer Setup menus without saving your changes, select **Main**, select **Ignore Changes and Exit**, and then select **Yes**.

NOTE: If you are using arrow keys to highlight your choice, you must then press enter.

To check for later BIOS versions, see Preparing for a BIOS update on page 77.

Preparing for a BIOS update

Be sure to follow all prerequisites before downloading and installing a BIOS update.

IMPORTANT: To reduce the risk of damage to the computer or an unsuccessful installation, download and install a BIOS update only when the computer is connected to reliable external power using the AC adapter. Do not download or install a BIOS update while the computer is running on battery power, docked in an optional docking device, or connected to an optional power source. During the download and installation, follow these instructions:

Do not disconnect power on the computer by unplugging the power cord from the AC outlet.

Do not shut down the computer or initiate Sleep.

Do not insert, remove, connect, or disconnect any device, cable, or cord.

Downloading a BIOS update

After you review the prerequisites, you can check for and download BIOS updates.

1. Select the **Search** icon in the taskbar, type `support` in the search box, and then select the **HP Support Assistant** app.

   – or –

   Select the question mark icon (select products only) in the taskbar.

2. Select **Updates**, and then select **Check for updates and messages**.
3. Follow the on-screen instructions.
4. At the download area, follow these steps:

   a. Identify the most recent BIOS update and compare it to the BIOS version currently installed on your computer. Make a note of the date, name, or other identifier. You might need this information to locate the update later, after it has been downloaded to your hard drive.

   b. Follow the on-screen instructions to download your selection to the hard drive.

      Make a note of the path to the location on your hard drive where the BIOS update is downloaded. You will need to access this path when you are ready to install the update.

NOTE: If you connect your computer to a network, consult the network administrator before installing any software updates, especially system BIOS updates.

Installing a BIOS update

BIOS installation procedures vary. Follow any instructions that are displayed on the screen after the download is complete. If no instructions are displayed, follow these steps.

1. Select the **Search** icon in the taskbar, type `file` in the search box, and then select **File Explorer**.
2. Select your hard drive designation. The hard drive designation is typically Local Disk (C:).
3. Using the hard drive path you recorded earlier, open the folder that contains the update.
4. Double-click the file that has an .exe extension (for example, *filename*.exe).

   The BIOS installation begins.

5. Complete the installation by following the on-screen instructions.

NOTE: After a message on the screen reports a successful installation, you can delete the downloaded file from your hard drive.

Changing the boot order using the f9 prompt

To dynamically choose a boot device for the current startup sequence, follow these steps.

1. Access the Boot Device Options menu:

   - Turn on or restart the computer, and when the HP logo appears, press f9 to enter the Boot Device Options menu.

2. Select a boot device, press enter, and then follow the on-screen instructions.

TPM BIOS settings (select products only)

TPM provides additional security for your computer. You can modify the TPM settings in Computer Setup (BIOS).

IMPORTANT: Before enabling Trusted Platform Module (TPM) functionality on this system, you must ensure that your intended use of TPM complies with relevant local laws, regulations and policies, and approvals or licenses must be obtained if applicable. For any compliance issues arising from your operation or usage of TPM that violates the previously mentioned requirement, you shall bear all the liabilities wholly and solely. HP will not be responsible for any related liabilities.

NOTE: If you change the TPM setting to Hidden, TPM is not visible in the operating system.

To access TPM settings in Computer Setup:

1. Start Computer Setup. See Using Computer Setup on page 76.
2. Select **Security**, select **TPM Embedded Security**, and then follow the on-screen instructions.

Using HP Sure Start (select products only)

Select computer models are configured with HP Sure Start, a technology that monitors the computer's BIOS for attacks or corruption. If the BIOS becomes corrupted or is attacked, HP Sure Start automatically restores the BIOS to its previously safe state, without user intervention.

HP Sure Start is configured and already enabled so that most users can use the HP Sure Start default configuration. Advanced users can customize the default configuration.

To access the latest documentation on HP Sure Start, go to http://www.hp.com/support. Select **Find your product**, and then follow the on-screen instructions.

9 Using HP PC Hardware Diagnostics

You can use the HP PC Hardware Diagnostics utility to determine whether your computer hardware is running properly. The three versions are HP PC Hardware Diagnostics Windows, HP PC Hardware Diagnostics UEFI (Unified Extensible Firmware Interface), and (for select products only) Remote HP PC Hardware Diagnostics UEFI, a firmware feature.

Using HP PC Hardware Diagnostics Windows (select products only)

HP PC Hardware Diagnostics Windows is a Windows-based utility that allows you to run diagnostic tests to determine whether the computer hardware is functioning properly. The tool runs within the Windows operating system to diagnose hardware failures.

If HP PC Hardware Diagnostics Windows is not installed on your computer, you must download and install it. To download HP PC Hardware Diagnostics Windows, see Downloading HP PC Hardware Diagnostics Windows on page 81.

Using an HP PC Hardware Diagnostics Windows hardware failure ID code

When HP PC Hardware Diagnostics Windows detects a failure that requires hardware replacement, a 24-digit failure ID code is generated for select component tests. For interactive tests, such as keyboard, mouse, or audio and video palette, you must perform troubleshooting steps before you can receive a failure ID.

- You have several options after you receive a failure ID:
  - Select **Next** to open the Event Automation Service (EAS) page, where you can log the case.
  - Scan the QR code with your mobile device, which takes you to the EAS page, where you can log the case.
  - Select the box next to the 24-digit failure ID to copy your failure code and send it to support.

Accessing HP PC Hardware Diagnostics Windows

After HP PC Hardware Diagnostics Windows is installed, you can access it from HP Support Assistant or the Start menu.

Accessing HP PC Hardware Diagnostics Windows from HP Support Assistant

After HP PC Hardware Diagnostics Windows is installed, follow these steps to access it from HP Support Assistant:

1. Complete one of the following tasks:
   - Select the **Search** icon in the taskbar, type `support` in the search box, and then select the **HP Support Assistant** app.
   - Select the question mark icon in the taskbar.
2. Select **Fixes & Diagnostics**.

3. Select **Run hardware diagnostics**, and then select **Launch**.
4. When the tool opens, select the type of diagnostic test that you want to run, and then follow the on-screen instructions.

NOTE: To stop a diagnostic test, select **Cancel**.

Accessing HP PC Hardware Diagnostics Windows from the Start menu (select products only)

After HP PC Hardware Diagnostics Windows is installed, follow these steps to access it from the Start menu:

1. Select the **Start** button, and then select **All apps**.
2. Select **HP PC Hardware Diagnostics Windows**.
3. When the tool opens, select the type of diagnostic test that you want to run, and then follow the on-screen instructions.

NOTE: To stop a diagnostic test, select **Cancel**.

Downloading HP PC Hardware Diagnostics Windows

The HP PC Hardware Diagnostics Windows downloading instructions are provided in English only. You must use a Windows computer to download this tool because only .exe files are provided.

Downloading the latest HP PC Hardware Diagnostics Windows version from HP

To download HP PC Hardware Diagnostics Windows from HP, follow these steps:

1. Go to http://www.hp.com/go/techcenter/pcdiags. The HP PC Diagnostics home page is displayed.
2. Select **Download HP Diagnostics Windows**, and then select the specific Windows diagnostics version to download to your computer or a USB flash drive.

The tool downloads to the selected location.

Downloading the HP PC Hardware Diagnostics Windows from the Microsoft Store

You can download the HP PC Hardware Diagnostics Windows from the Microsoft Store:

1. Select the Microsoft Store app on your desktop or select the **Search** icon in the taskbar, and then type `Microsoft Store` in the search box.
2. Type `HP PC Hardware Diagnostics Windows` in the **Microsoft Store** search box.
3. Follow the on-screen directions.

The tool downloads to the selected location.

Downloading HP Hardware Diagnostics Windows by product name or number (select products only)

You can download HP PC Hardware Diagnostics Windows by product name or number.

NOTE: For some products, you might have to download the software to a USB flash drive by using the product name or number.

1. Go to http://www.hp.com/support.
2. Select **Software and Drivers**, select your type of product, and then enter the product name or number in the search box that is displayed.
3. In the **Diagnostics** section, select **Download**, and then follow the on-screen instructions to select the specific Windows diagnostics version to be downloaded to your computer or USB flash drive.

The tool downloads to the selected location.

Installing HP PC Hardware Diagnostics Windows

To install HP PC Hardware Diagnostics Windows, navigate to the folder on your computer or the USB flash drive where the .exe file downloaded, double-click the .exe file, and then follow the on-screen instructions.

Using HP PC Hardware Diagnostics UEFI

HP PC Hardware Diagnostics Unified Extensible Firmware Interface (UEFI) allows you to run diagnostic tests to determine whether the computer hardware is functioning properly. The tool runs outside the operating system so that it can isolate hardware failures from issues that are caused by the operating system or other software components.

NOTE: For some products, you must use a Windows computer and a USB flash drive to download and create the HP UEFI support environment because only .exe files are provided. For more information, see Downloading HP PC Hardware Diagnostics UEFI to a USB flash drive on page 83.

If your PC does not start in Windows, you can use HP PC Hardware Diagnostics UEFI to diagnose hardware issues.

Using an HP PC Hardware Diagnostics UEFI hardware failure ID code

When HP PC Hardware Diagnostics UEFI detects a failure that requires hardware replacement, a 24-digit failure ID code is generated.

For assistance in solving the problem, complete one of these tasks:

- Select **Contact HP**, accept the HP privacy disclaimer, and then use a mobile device to scan the failure ID code that appears on the next screen. The HP Customer Support - Service Center page appears with your failure ID and product number automatically filled in. Follow the on-screen instructions.
- Contact support, and provide the failure ID code.

Starting HP PC Hardware Diagnostics UEFI

To start HP PC Hardware Diagnostics UEFI, follow this procedure.

1. Turn on or restart the computer, and quickly press esc.
2. Press f2.

   The BIOS searches three places for the diagnostic tools, in the following order:

a. Connected USB flash drive

NOTE: To download the HP PC Hardware Diagnostics UEFI tool to a USB flash drive, see Downloading the latest HP PC Hardware Diagnostics UEFI version on page 83.

b. Hard drive

c. BIOS

3. When the diagnostic tool opens, select the type of diagnostic test that you want to run, and then follow the on-screen instructions.

Starting HP PC Hardware Diagnostics UEFI through HP Hotkey Support software (select products only)

To start HP PC Hardware Diagnostics UEFI through HP Hotkey Support software, follow this procedure.

1. From the **Start** menu, open the HP System Information Application or enter Fn+Esc.
2. In HP System Information screen, select **Run System Diagnostics**, select **Yes** to run the application, and then select **Restart**.

IMPORTANT: To prevent loss of data, save your work in all open apps before restarting your computer.

NOTE: When the restart is complete, the computer will boot to HP PC Hardware Diagnostics UEFI Application. Proceed with the troubleshooting tests.

Downloading HP PC Hardware Diagnostics UEFI to a USB flash drive

Downloading HP PC Hardware Diagnostics UEFI to a USB flash drive can be useful in some situations.

- HP PC Hardware Diagnostics UEFI is not included in the preinstallation image.
- HP PC Hardware Diagnostics UEFI is not included in the HP Tool partition.
- The hard drive is damaged.

NOTE: The HP PC Hardware Diagnostics UEFI downloading instructions are provided in English only, and you must use a Windows computer to download and create the HP UEFI support environment because only .exe files are provided.

Downloading the latest HP PC Hardware Diagnostics UEFI version

To download the latest HP PC Hardware Diagnostics UEFI version to a USB flash drive, follow this procedure:

1. Go to http://www.hp.com/go/techcenter/pcdiags. The HP PC Diagnostics home page is displayed.
2. Select **Download HP Diagnostics UEFI**, and then select **Run**.

Downloading HP PC Hardware Diagnostics UEFI by product name or number (select products only)

You can download HP PC Hardware Diagnostics UEFI by product name or number (select products only) to a USB flash drive.

NOTE: For some products, you might have to download the software to a USB flash drive by using the product name or number.

1. Go to http://www.hp.com/support.
2. Enter the product name or number, select your computer, and then select your operating system.
3. In the **Diagnostics** section, follow the on-screen instructions to select and download the specific UEFI Diagnostics version for your computer.

Using Remote HP PC Hardware Diagnostics UEFI settings (select products only)

Remote HP PC Hardware Diagnostics UEFI is a firmware (BIOS) feature that downloads HP PC Hardware Diagnostics UEFI to your computer. It can then run the diagnostics on your computer, and it might upload results to a preconfigured server.

For more information about Remote HP PC Hardware Diagnostics UEFI, go to http://www.hp.com/go/techcenter/pcdiags, and then select **Find out more**.

Downloading Remote HP PC Hardware Diagnostics UEFI

HP Remote PC Hardware Diagnostics UEFI is also available as a SoftPaq that you can download to a server.

Downloading the latest Remote HP PC Hardware Diagnostics UEFI version

You can download the latest HP PC Hardware Diagnostics UEFI version to a USB flash drive.

1. Go to http://www.hp.com/go/techcenter/pcdiags. The HP PC Diagnostics home page is displayed.
2. Select **Download Remote Diagnostics**, and then select **Run**.

Downloading Remote HP PC Hardware Diagnostics UEFI by product name or number

You can download HP Remote PC Hardware Diagnostics UEFI by product name or number.

NOTE: For some products, you might have to download the software by using the product name or number.

1. Go to http://www.hp.com/support.
2. Select **Software and Drivers**, select your type of product, enter the product name or number in the search box that is displayed, select your computer, and then select your operating system.
3. In the **Diagnostics** section, follow the on-screen instructions to select and download the **Remote UEFI** version for the product.

Customizing Remote HP PC Hardware Diagnostics UEFI settings

Using the Remote HP PC Hardware Diagnostics setting in Computer Setup (BIOS), you can perform several customizations.

- Set a schedule for running diagnostics unattended. You can also start diagnostics immediately in interactive mode by selecting **Execute Remote HP PC Hardware Diagnostics**.

- Set the location for downloading the diagnostic tools. This feature provides access to the tools from the HP website or from a server that has been preconfigured for use. Your computer does not require the traditional local storage (such as a hard drive or USB flash drive) to run remote diagnostics.
- Set a location for storing the test results. You can also set the user name and password that you use for uploads.
- Display status information about the diagnostics run previously.

To customize Remote HP PC Hardware Diagnostics UEFI settings, follow these steps:

1. Turn on or restart the computer, and when the HP logo appears, press f10 to enter Computer Setup.
2. Select **Advanced**, and then select **Settings**.
3. Make your customization selections.
4. Select **Exit**, then select **Save Changes and Exit** to save your settings.

Your changes take effect when the computer restarts.

10 Specifications

This chapter provides specifications for your computer system.

Computer specifications

This section provides specifications for your computer. When traveling with your computer, the computer dimensions and weights, as well as input power ratings and operating specifications, provide helpful information.

Table 10-1 Computer specifications

	Metric	U.S.
Dimensions		
Width	**321.90 mm**	12.67 in
Depth	**213.90 mm**	8.42 in
Height	**19.95 mm**	0.79 in
Weight	**1.38 kg**	3.04 lbs
Input power		
Operating voltage and current	19.5 V DC @ 2.31 A - 45 W 19.5 V DC @ 3.33 A - 65 W	
Temperature		
Operating	**5°C to 35°C**	41°F to 95°F
Nonoperating	**-20°C to 60°C**	-4°F to 140°F
Relative humidity (noncondensing)		
Operating	10% to 90%	
Nonoperating	5% to 95%	
Maximum altitude (unpressurized)		
Operating	**-15 m to 3,048 m**	-50 ft to 10,000 ft
Nonoperating	**-15 m to 12,192 m**	-50 ft to 40,000 ft

NOTE: Applicable product safety standards specify thermal limits for plastic surfaces. The device operates well within this range of temperatures.

Display specifications

This section provides specifications for your display.

Table 10-2 **Display specifications**

	Metric	U.S.
Active diagonal size	**35.6 cm**	14.0 in
Resolution	1920 × 1080	
	1366 × 768	
Surface treatment	Antiglare	
Brightness	250 nits (45% CG panels)	
	400 nits (sRGB, 72% CG panels)	
Viewing angle	UWVA	
	SVA	
Backlight	LED	
Display panel interface	eDP	

Solid-state drive specifications

This section provides specifications for your solid-state drives.

Table 10-3 **Solid-state drive specifications**

	256 GB*	512 GB*	1 TB*
Dimensions			
Height	1.0 mm	1.0 mm	1.0 mm
Length	50.8 mm	50.8 mm	50.8 mm
Width	28.9 mm	28.9 mm	28.9 mm
Weight	< 10 g	< 10 g	< 10 g
Interface type	PCIe	PCIe	PCIe
Ready time, maximum (to not busy)	1.0 ms	< 1.0 ms	1.0 ms
Access times, logical	0.1 ms	0.1 ms	0.1 ms
Transfer rate			
Sequential read	up to 2150 MBps	up to 2150 MBps	up to 2150 MBps
Random read	Up to 300,000 IOPs	Up to 300,000 IOPs	Up to 300,000 IOPs
Sequential write	up to 1550 MBps	up to 1550 MBps	up to 1550 MBps
Random write	Up to 100,000 IOPs	Up to 100,000 IOPs	Up to 100,000 IOPs
Total logical sectors	468,883,296	1,000,215,216	1,500,336,388
Operating temperature		**0°C to 70°C** (32°F to 158°F)	

*1 GB = 1 billion bytes when referring to hard drive storage capacity. Actual accessible capacity is less. Actual drive specifications might differ slightly.

NOTE: Certain restrictions and exclusions apply. Contact support for details.

11 Statement of memory volatility

For general information regarding nonvolatile memory in HP business computers, and to restore nonvolatile memory that can contain personal data after the system has been turned off and the hard drive has been removed, use these instructions.

HP business computer products that use Intel®-based or AMD®-based system boards contain volatile DDR memory. The amount of nonvolatile memory present in the system depends upon the system configuration. Intel-based and AMD-based system boards contain nonvolatile memory subcomponents as originally shipped from HP, with the following assumptions:

- No subsequent modifications were made to the system.
- No applications, features, or functionality were added to or installed on the system.

Following system shutdown and removal of all power sources from an HP business computer system, personal data can remain on volatile system memory (DIMMs) for a finite period of time and also remains in nonvolatile memory. Use the following steps to remove personal data from the computer, including the nonvolatile memory found in Intel-based and AMD-based system boards.

NOTE: If your tablet has a keyboard base, connect to the keyboard base before beginning steps in this chapter.

Current BIOS steps

Use these instructions to restore nonvolatile memory.

1. Follow these steps to restore the nonvolatile memory that can contain personal data. Restoring or reprogramming nonvolatile memory that does not store personal data is neither necessary nor recommended.

   a. Turn on or restart the computer, and then quickly press esc.

   NOTE: If the system has a BIOS administrator password, type the password at the prompt.

   b. Select **Main**, select **Apply Factory Defaults and Exit**, and then select **Yes** to load defaults. The computer restarts.

   c. During the restart, press esc while the "Press the ESC key for Startup Menu" message is displayed at the bottom of the screen.

   NOTE: If the system has a BIOS administrator password, type the password at the prompt.

   d. Select the **Security** menu, select **Restore Security Settings to Factory Defaults**, and then select **Yes** to restore security level defaults. The computer restarts.

   e. During the restart, press esc while the "Press the ESC key for Startup Menu" message is displayed at the bottom of the screen.

   NOTE: If the system has a BIOS administrator password, type the password at the prompt.

f. If an asset or ownership tag is set, select the **Security** menu and scroll down to the **Utilities** menu. Select **System IDs**, and then select **Asset Tracking Number**. Clear the tag, and then make the selection to return to the prior menu.

g. If a DriveLock password is set, select the **Security** menu, and scroll down to **Hard Drive Utilities** under the **Utilities** menu. Select **Hard Drive Utilities**, select **DriveLock**, and then clear the check box for **DriveLock password on restart**. Select **OK** to proceed.

h. Select the **Main** menu, and then select **Reset BIOS Security to factory default**. Select **Yes** at the warning message. The computer restarts.

i. During the restart, press esc while the "Press the ESC key for Startup Menu" message is displayed at the bottom of the screen.

NOTE: If the system has a BIOS administrator password, type the password at the prompt.

j. Select the **Main** menu, select **Apply Factory Defaults and Exit**, select **Yes** to save changes and exit, and then select **Shutdown**.

k. Restart the system. If the system has a Trusted Platform Module (TPM), fingerprint reader, or both, one or two prompts will appear—one to clear the TPM and the other to Reset Fingerprint Sensor. Press or tap f1 to accept or f2 to reject.

l. Remove all power and system batteries for at least 24 hours.

2. Complete one of the following:

- Remove and retain the storage drive.

  – or –

- Clear the drive contents by using a third-party utility designed to erase data from an SSD.

  – or –

- Clear the contents of the drive by using the following BIOS Setup Secure Erase command option steps:

NOTE: If you clear data using Secure Erase, you cannot recover it.

a. Turn on or restart the computer, and then quickly press esc.

b. Select the **Security** menu and scroll down to the esc menu.

c. Select **Hard Drive Utilities**.

d. Under **Utilities**, select **Secure Erase**, select the hard drive storing the data you want to clear, and then follow the on-screen instructions to continue.

   – or –

   Clear the contents of the drive using the following Disk Sanitizer commands steps:

   i. Turn on or restart the computer, and then quickly press esc.

   ii. Select the **Security** menu and scroll down to the **Utilities** menu.

   iii. Select **Hard Drive Utilities**.

iv. Under **Utilities**, select **Disk Sanitizer**, select the hard drive with the data that you want to clear, and then follow the on-screen instructions to continue.

NOTE: The amount of time it takes for Disk Sanitizer to run can take several hours. Plug the computer into an AC outlet before starting.

Nonvolatile memory usage

Use this table to troubleshoot nonvolatile memory usage.

Table 11-1 Troubleshooting steps for nonvolatile memory usage

Description	Volatility description	Storage user data	How to erase
Primary storage device, holds the OS, applications, and application settings	Non-volatile, 8-256 GB of eMMC or NVMe SSD storage, removable	Yes[1]	Follow instructions below under "Erase the Primary Storage Device"
System memory (RAM), holds transient data during system operation	Volatile, SODIMM socket. Removable (4 GB/8 GB/16 GB)	Yes	Unplug unit from power
Permanent system BIOS settings*	Non-volatile; ?? KB; stored <<where>>,	No[2]	Follow instructions below under "Clearing BIOS Settings"
System boot ROM (BIOS)	Non-volatile memory, 128 Mbit (16 MB) socketed, removable	No	Download the latest BIOS for your model from the HP website and follow the instructions to flash the BIOS that are on the website
RTC (CMOS) RAM	Volatile memory, 256 bytes located in AMD embedded System on Chip (SoC)	No	Unplug unit from main power, remove top cover and press **Clear CMOS** button
Keyboard/mouse (ROM)	Non-volatile, 2 KB embedded in the super I/O controller (SIO2)	Yes	N/A
Keyboard/mouse (RAM)	Volatile, 256 bytes embedded in the super I/O controller (SIO2)	No	Unplug unit from main power
LOM EEPROM	Non-volatile, 2 MB embedded in LAN controller	No	N/A
Trusted Platform Module (TPM)	Non-volatile; 51 KB ROM for firmware and 38 KB system parametric data	No[3]	Follow instructions below under "Clearing TPM"

[1] Under typical operation, the only user data stored on the primary storage device are preferences for device configuration and settings for connections. However, the administrator can configure the system to allow users to store data locally.

[2] Only user data potentially stored in BIOS Settings are the ownership and asset tags, administrator password, and startup password.

[3] The Trusted Platform Module may contain encrypted passwords or certificates generated from user or administrator input.

Questions and answers

Use this section to answer your questions about nonvolatile memory.

1. **How can the BIOS settings be restored (returned to factory settings)?**

IMPORTANT: The restore defaults feature does not securely erase any information on your hard drive. See question and answer 6 for steps to securely erase information.

The restore defaults feature does not reset the Custom Secure Boot keys. See question and answer 7 for information about resetting the keys.

   a. Turn on or restart the computer, and then quickly press esc.

   b. Select **Main**, and then select **Apply Factory Defaults and Exit**.

   c. Follow the on-screen instructions.

   d. Select **Main**, select **Save Changes and Exit**, and then follow the on-screen instructions.

2. **What is a UEFI BIOS, and how is it different from a legacy BIOS?**

   The Unified Extensible Firmware Interface (UEFI) BIOS is an industry-standard software interface between the platform firmware and an operating system (OS). It replaces the older BIOS architecture but supports much of the legacy BIOS functionality.

   Like the legacy BIOS, the UEFI BIOS provides an interface to display the system information and configuration settings and to change the configuration of your computer before an OS is loaded. BIOS provides a secure runtime environment that supports a Graphic User Interface (GUI). In this environment, you can use either a pointing device (touch screen, touchpad, pointing stick, or USB mouse) or the keyboard to navigate and make menu and configuration selections. The UEFI BIOS also contains basic system diagnostics.

   The UEFI BIOS provides functionality beyond that of the legacy BIOS. In addition, the UEFI BIOS works to initialize the computer's hardware before loading and executing the OS; the runtime environment allows the loading and execution of software programs from storage devices to provide more functionality, such as advanced hardware diagnostics (with the ability to display more detailed system information) and advanced firmware management and recovery software.

   HP has provided options in Computer Setup (BIOS) to allow you to run in legacy BIOS, if required by the operating system. Examples of this requirement would be if you upgrade or downgrade the OS.

3. **Where is the UEFI BIOS located?**

   The UEFI BIOS is located on a flash memory chip. You must use a utility to write to the chip.

4. **What kind of configuration data is stored on the DIMM Serial Presence Detect (SPD) memory module? How would this data be written?**

   The DIMM SPD memory contains information about the memory module, such as size, serial number, data width, speed and timing, voltage, and thermal information. This information is written by the module manufacturer and stored on an EEPROM. You cannot write to this EEPROM when the memory module is installed in a computer. Third-party tools do exist that can write to the EEPROM when the memory module is not installed in a computer. Various third-party tools are available to read SPD memory.

5. **What is meant by "Restore the nonvolatile memory found in Intel-based system boards"?**

   This message relates to clearing the Real Time Clock (RTC) CMOS memory that contains computer configuration data.

6. **How can the BIOS security be reset to factory defaults and erase the data?**

IMPORTANT: Resetting results in the loss of information.

These steps do not reset Custom Secure Boot Keys. See question and answer 7 for information about resetting the keys.

a. Turn on or restart the computer, and then quickly press esc.

b. Select **Main**, and then select **Reset Security to Factory Defaults**.

c. Follow the on-screen instructions.

d. Select **Main**, select **Save Changes and Exit**, and then follow the on-screen instructions.

7. **How can the Custom Secure Boot Keys be reset?**

Secure Boot is a feature to ensure that only authenticated code can start on a platform. If you enabled Secure Boot and created Custom Secure Boot Keys, disabling Secure Boot does not clear the keys. You must also select to clear the Custom Secure Boot Keys. Use the same Secure Boot access procedure that you used to create the Custom Secure Boot Keys, but select to clear or delete all Secure Boot Keys.

a. Turn on or restart the computer, and then quickly press esc.

b. Select the **Security** menu, select **Secure Boot Configuration**, and then follow the on-screen instructions.

c. At the **Secure Boot Configuration** window, select **Secure Boot**, select **Clear Secure Boot Keys**, and then follow the on-screen instructions to continue.

Using HP Sure Start (select products only)

Select computer models are configured with HP Sure Start, a technology that continuously monitors your computer's BIOS for attacks or corruption.

If the BIOS becomes corrupted or is attacked, HP Sure Start restores the BIOS to its previously safe state, without user intervention. Those select computer models ship with HP Sure Start configured and enabled. HP Sure Start is configured and already enabled so that most users can use the HP Sure Start default configuration. Advanced users can customize the default configuration.

To access the latest documentation on HP Sure Start, go to http://www.hp.com/support.

12 Power cord set requirements

This chapter provides power cord requirements for countries and regions.

The wide-range input feature of the computer permits it to operate from any line voltage from 100 V AC to 120 V AC, or from 220 V AC to 240 V AC.

The three-conductor power cord set included with the computer meets the requirements for use in the country or region where the equipment is purchased.

Power cord sets for use in other countries or regions must meet the requirements of the country and region where the computer is used.

Requirements for all countries

These power cord requirements are applicable to all countries and regions.

- The length of the power cord set must be at least **1.0 m** (3.3 ft) and no more than **2.0 m** (6.5 ft).
- All power cord sets must be approved by an acceptable accredited agency responsible for evaluation in the country or region where the power cord set will be used.
- The power cord sets must have a minimum current capacity of 10 A and a nominal voltage rating of 125 V AC or 250 V AC, as required by the power system of each country or region.
- The appliance coupler must meet the mechanical configuration of an EN 60 320/IEC 320 Standard Sheet C13 connector for mating with the appliance inlet on the back of the computer.

Requirements for specific countries and regions

To determine power cord requirements for specific countries and regions, use this table.

Table 12-1 Power cord requirements for specific countries and regions

Country/region	Accredited agency	Applicable note number
Argentina	IRAM	1
Australia	SAA	1
Austria	OVE	1
Belgium	CEBEC	1
Brazil	ABNT	1
Canada	CSA	2
Chile	IMQ	1
Denmark	DEMKO	1
Finland	FIMKO	1
France	UTE	1

Table 12-1 Power cord requirements for specific countries and regions (continued)

Country/region	Accredited agency	Applicable note number
Germany	VDE	1
India	BIS	1
Israel	SII	1
Italy	IMQ	1
Japan	JIS	3
Netherlands	KEMA	1
New Zealand	SANZ	1
Norway	NEMKO	1
People's Republic of China	CCC	4
Saudi Arabia	SASO	7
Singapore	PSB	1
South Africa	SABS	1
South Korea	KTL	5
Sweden	SEMKO	1
Switzerland	SEV	1
Taiwan	BSMI	6
Thailand	TISI	1
United Kingdom	ASTA	1
United States	UL	2

1. The flexible cord must be Type HO5VV-F, three-conductor, 0.75 mm² conductor size. Power cord set fittings (appliance coupler and wall plug) must bear the certification mark of the agency responsible for evaluation in the country or region where it will be used.
2. The flexible cord must be Type SVT/SJT or equivalent, No. 18 AWG, three-conductor. The wall plug must be a two-pole grounding type with a NEMA 5-15P (15 A, 125 V AC) or NEMA 6-15P (15 A, 250 V AC) configuration. CSA or C-UL mark. UL file number must be on each element.
3. The appliance coupler, flexible cord, and wall plug must bear a T mark and registration number in accordance with the Japanese Dentori Law. The flexible cord must be Type VCTF, three-conductor, 0.75 mm² or 1.25 mm² conductor size. The wall plug must be a two-pole grounding type with a Japanese Industrial Standard C8303 (7 A, 125 V AC) configuration.
4. The flexible cord must be Type RVV, three-conductor, 0.75 mm² conductor size. Power cord set fittings (appliance coupler and wall plug) must bear the CCC certification mark.
5. The flexible cord must be Type H05VV-F three-conductor, 0.75 mm² conductor size. KTL logo and individual approval number must be on each element. Approval number and logo must be printed on a flag label.
6. The flexible cord must be Type HVCTF three-conductor, 1.25 mm² conductor size. Power cord set fittings (appliance coupler, cable, and wall plug) must bear the BSMI certification mark.
7. For 127 V AC, the flexible cord must be Type SVT or SJT 3-conductor, 18 AWG, with plug NEMA 5-15P (15 A, 125 V AC), with UL and CSA or C-UL marks. For 240 V AC, the flexible cord must be Type H05VV-F three-conductor, 0.75 mm² or 1.00 mm² conductor size, with plug BS 1363/A with BSI or ASTA marks.

13 Recycling

When a nonrechargeable or rechargeable battery has reached the end of its useful life, do not dispose of the battery in general household waste. Follow the local laws and regulations in your area for battery disposal.

HP encourages customers to recycle used electronic hardware, HP original print cartridges, and rechargeable batteries. For more information about recycling programs, see the HP website at http://www.hp.com/recycle.

Index

A

AC adapters, spare part numbers 25
audio-out (headphone)/audio-in (microphone) combo jack, identifying 6
audio, product description 2

B

backup, creating 73
backups 73
battery
  illustrated 21
  spare part number 21
battery light 7
BIOS
  determining version 77
  downloading an update 77, 78
  updating 77
Bluetooth label 16
boot order
  changing using the f9 prompt 78
boot order, changing 75
bottom cover
  illustrated 21
  removal 39
  spare part number 21, 39
buttons
  power 13, 15

C

Cable Kit
  spare part number 24
camera 9
  identifying 9
camera light, identifying 9
camera privacy cover, identifying 9
caps lock light, identifying 12
caring for your computer 34
cautions
  electrostatic discharge 30, 31
cleaning your computer 34
  caring for wood veneer 36
  disinfecting 35
  HP Easy Clean 34
  removing dirt and debris 34
components
  bottom 15
  display 8
  keyboard area 10
  left side 7
  rear 16
  right side 6
computer major components 19
Computer Setup
  navigating and selecting 76
  restoring factory settings 76
  starting 76
computer specifications 86
connector, power 7
control zone 11

D

display
  specifications 86
display assembly
  subcomponents 22
display back cover
  illustrated 24
  spare part number 24
display bezel
  illustrated 23
  spare part number 23
display cable
  illustrated 24
  spare part number 24
display components 8
display panel
  illustrated 24
  product description 1
  spare part number 24

E

electrostatic discharge (ESD) 30, 31
  preventing damage 30-32
esc key, identifying 14

F

fan
  illustrated 21
  removal 55
  spare part number 21, 55
fingerprint reader
  illustrated 22
  spare part number 22
fingerprint reader board
  removal 56
  spare part numbers 56
fingerprint reader, identifying 14
fn key, identifying 14
fn lock light, identifying 12

G

graphics, product description 1
grounding methods 30-32
guidelines
  packaging 30, 36
  transporting 30, 36
  workstation 30

H

hard drive
  product description 2
  specifications 86
HDMI port, identifying 6
heat sink
  removal 57
  spare part numbers 57
hinge
  illustrated 24
  spare part number 24
HP PC Hardware Diagnostics UEFI
  downloading 83
  failure ID code 82
  HP Hotkey Support software 83
  starting 82, 83
  using 82
HP PC Hardware Diagnostics Windows
  accessing 80, 81
  downloading 81
  failure ID code 80
  installing 82
  using 80
HP Recovery media recovery 74
HP Sure Recover 75

HP Sure Start 88, 92

I

I/O board
illustrated 21
removal 51
spare part number 21, 51
illustrated parts catalog 19
internal microphones, identifying 9

J

jacks
audio-out (headphone)/audio-in (microphone) combo 6
network 8
RJ-45 (network) 8

K

keyboard
product description 4
keys
esc 14
fn 14
Windows 14
Windows application 14

L

labels
Bluetooth 16
regulatory 16
serial number 16
service 16
wireless certification 16
WLAN 16
left control zone, identifying 11
left side components 7
lights
AC adapter and battery 7
battery 7
camera 9
caps lock 12
fn lock 12
microphone mute 12
power 12
RJ-45 (network) 8
lights, mute 12
low blue light mode 8

M

memory
nonvolatile 88
volatile 88
memory module
illustrated 21
product description 2
spare part number 21
memory modules
removal 41
spare part numbers 41
microphone
product description 2
microphone mute light, identifying 12
model name 1
mute light, identifying 12

N

network jack, identifying 8
NFC module
illustrated 21
removal 53
spare part number 21, 53
nonvolatile memory 88

O

operating system, product description 5

P

packaging guidelines 30, 36
Plastics Kit, spare part number 26
pointing device, product description 4
ports
HDMI 6
product description 3
USB SuperSpeed 5 Gbps 7, 8
USB SuperSpeed 5 Gbps port with HP Sleep and Charge 7
USB Type-C DisplayPort 7
USB Type-C power connector 7
USB Type-C SuperSpeed 10 Gbps 7
power button, identifying 13, 15
power connector
identifying 7
power connector cable
illustrated 20
removal 62
spare part number 20, 62
power cord
requirements for all countries 93
requirements for specific countries and regions 93
set requirements 93
power cords, spare part numbers 27
power lights 12
power requirements, product description 4
primary storage
product description 2
processor
product description 1
product description
audio 2
display panel 1
graphics 1
hard drive 2
keyboard 4
memory module 2
microphone 2
operating system 5
pointing device 4
ports 3
power requirements 4
primary storage 2
processors 1
product name 1
RJ-45 (network) jack 3
security 4
sensors 3
serviceability 5
solid-state drive 2
video 2
wireless 3
product name 1
product name and number, computer 16

R

recovery 73
discs 74
media 74
USB flash drive 74
recovery media 73
creating using HP Cloud Recovery Download Tool 73
creating using Windows tools 73
regulatory information
regulatory label 16

wireless certification labels 16
Remote HP PC Hardware Diagnostics UEFI settings
customizing 84
using 84
removal and replacement procedures 39, 49
solid-state drive 46
removing personal data from volatile system memory 88
restoring 73
restoring and recovery methods 74
right control zone, identifying 11
right side components 6
RJ-45 (network) jack, identifying 8
RJ-45 (network) jack, product description 3
RJ-45 (network) lights, identifying 8
RTC battery
illustrated 21
spare part number 21

S

Screw Kit, spare part number 26
security cable slot, identifying 8
security, product description 4
sensors
product description 3
serial number, computer 16
service labels, locating 16
serviceability, product description 5
setup utility
navigating and selecting 76
restoring factory settings 76
SIM card, correct size 18, 41
SIM card, inserting 18, 40, 41
SIM slot, identifying 6
slots
security cable 8
SIM card 6
smart card 8
smart card reader
removal 54
spare part numbers 54
smart card slot, identifying 8
solid-state drive
illustrated 21
product description 2
removal and replacement 46
spare part number 21
specifications 87
spare part country codes 72
speaker
illustrated 20
removal 61
spare part number 20
spare part numbers 61
speakers, identifying 13
special keys, using 14
specifications
computer 86
display 86
hard drive 86
solid-state drive 87
static electricity 30, 31
support information 37
Sure Start
using 79
system board
illustrated 20
removal 58
spare part number 20
spare part numbers 58
system memory, removing personal data from volatile 88
system restore 74
system restore point, creating 73

T

top cover with keyboard
illustrated 20
spare part numbers 20, 72
touchpad
illustrated 20
removal 52
settings 10
spare part number 20, 52
touchpad zone, identifying 11
TPM settings 79
transporting guidelines 30, 36
traveling with the computer 16

U

USB SuperSpeed 5 Gbps port with HP Sleep and Charge, identifying 7
USB SuperSpeed 5 Gbps port, identifying 7
USB SuperSpeed 5 Gbps powered port, identifying 8
USB Type-C power connector port, identifying 7
USB Type-C SuperSpeed 10 Gbps port, identifying 7

V

vents, identifying 16
video, product description 2

W

Windows
backup 73
recovery media 73
system restore point 73
Windows application key, identifying 14
Windows key, identifying 14
Windows tools, using 73
wireless antennas
illustrated 24
spare part number 24
wireless antennas, identifying 9
wireless certification label 16
wireless, product description 3
WLAN antennas, identifying 9
WLAN device 16
WLAN label 16
WLAN module
illustrated 22
removal 43
spare part number 22
spare part numbers 43
workstation guidelines 30
WWAN antennas, identifying 9
WWAN module
removal 45
spare part numbers 45