ORTRONICS®
125 EUGENE O'NEILL DRIVE
NEW LONDON, CT 06320
TEL: 860-445-3800
FAX: 860-405-2990
WWW.ORTRONICS.COM

TITLE:
HDJ PANEL INSTALLATION INSTRUCTIONS

HIGH DENSITYJACK INSTALLATION

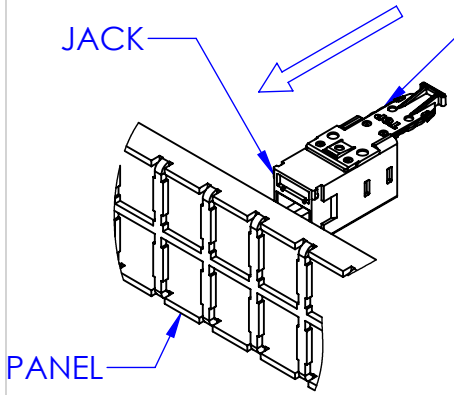

PULL BACK SLIDE LOCK TO STOP. THEN INSERT JACK INTO PANEL (JACK WILL GO IN ONE WAY ONLY WITH SLIDE LOCK UP).

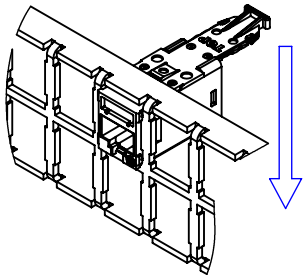

ONCE JACK SHOULDERS COME INTO CONTACT WITH BACKSIDE OF PANEL, PRESS DOWNWARD.

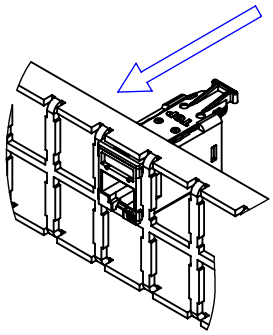

PUSH ON SLIDE LOCK UNTIL THE FRONT IS FLUSH WITH THE JACK FACE.

LABEL BEZEL INSTALLATION

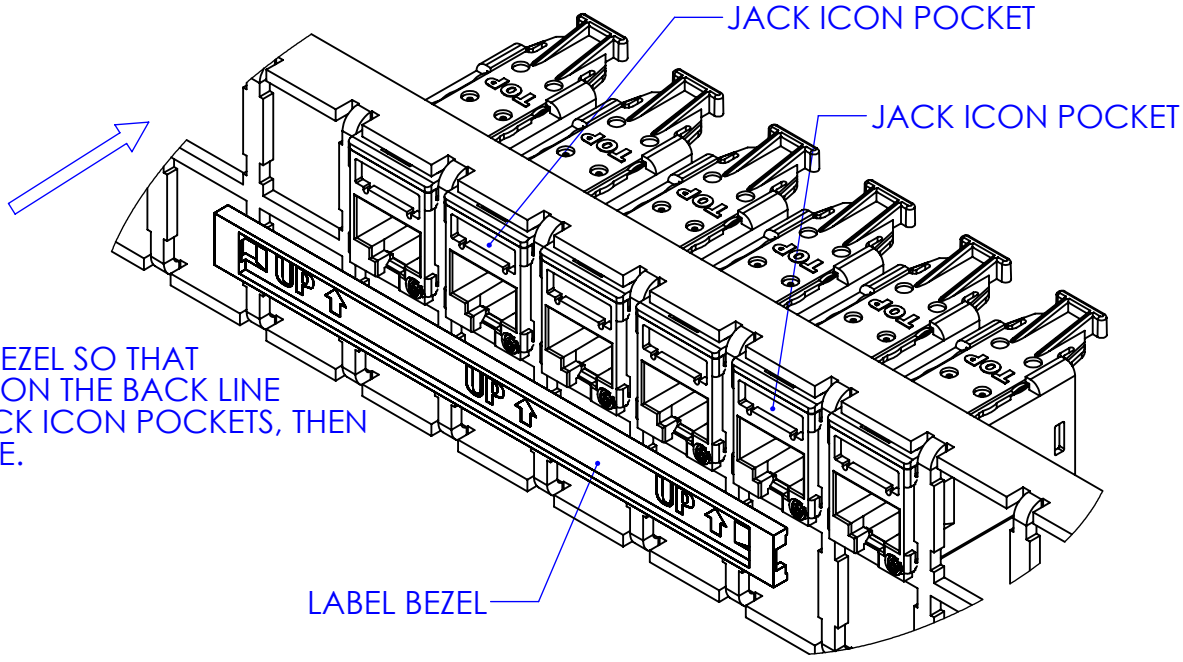

PUSH ON LABEL BEZEL SO THAT THE TWO BOSSES ON THE BACK LINE UP WITH TWO JACK ICON POCKETS, THEN PRESS INTO PLACE.

INSTRUCTION SHEET #:	REV:	ECN #:	SHEET:	DWN BY:	DATE:				
71601790	01	04319	1 OF 2	RWS	11/17/11	GL	11/21/12	A.M.	11/21/12

ORTRONICS
125 EUGENE O'NEILL DRIVE
NEW LONDON, CT 06320
TEL: 860-445-3800
FAX: 860-405-2990
WWW.ORTRONICS.COM

TITLE:
HDJ PANEL INSTALLATION INSTRUCTIONS

PANEL MOUNTING INSTALLATION

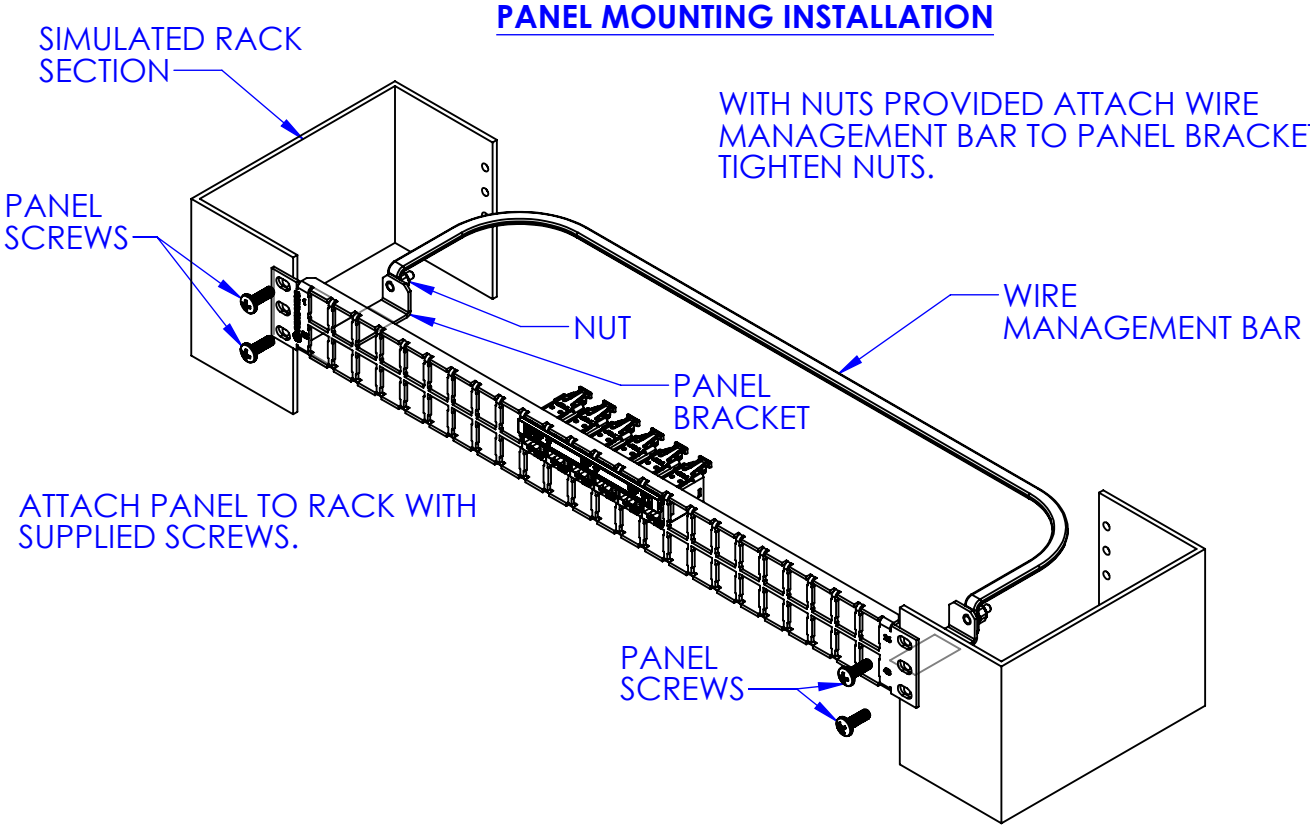

CABLE MANAGEMENT INSTRUCTIONS (TOP VIEW)

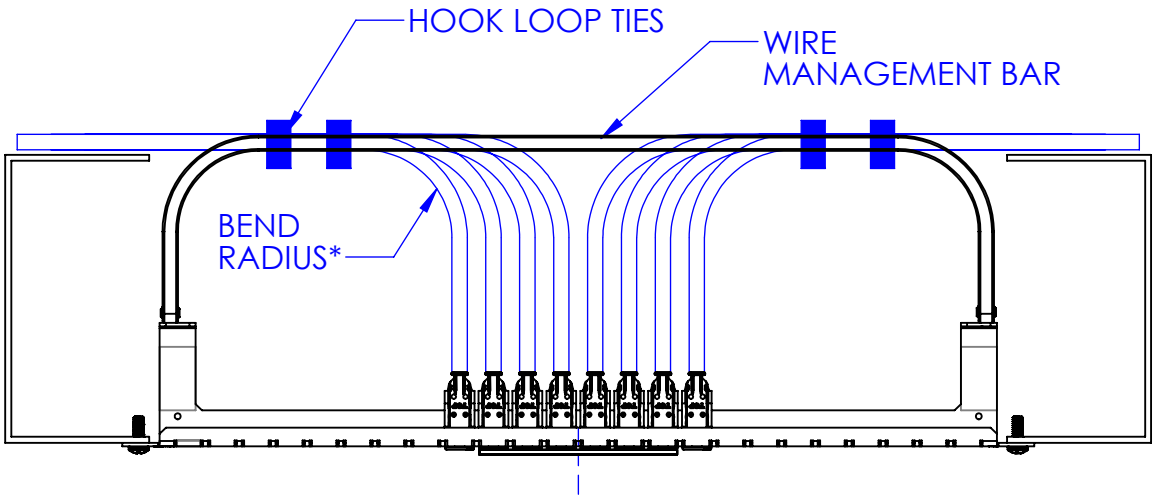

* THE MINIMUM CABLE BEND RADIUS IS 4 TIMES THE OUTSIDE CABLE DIAMETER. HOOK LOOP TIE WRAPS SHOULD BE USED TO ATTACH THE CABLES TO THE WIRE MANAGEMENT BAR. THE CABLE AT THE EDGE OF THE PATCH PANEL SHOULD BE ATTACHED TO THE CABLE WHICH HAS ALREADY BEEN TIE WRAPPED TO THE WIRE MANAGEMENT BAR.