

Cisco IP Phone 7800 and 8800 Series Accessories Guide for Cisco Unified Communications Manager

First Published: 2017-09-01

Last Modified: 2021-02-09

Americas Headquarters
Cisco Systems, Inc.
170 West Tasman Drive
San Jose, CA 95134-1706
USA
http://www.cisco.com
Tel: 408 526-4000
800 553-NETS (6387)
Fax: 408 527-0883

THE SPECIFICATIONS AND INFORMATION REGARDING THE PRODUCTS IN THIS MANUAL ARE SUBJECT TO CHANGE WITHOUT NOTICE. ALL STATEMENTS, INFORMATION, AND RECOMMENDATIONS IN THIS MANUAL ARE BELIEVED TO BE ACCURATE BUT ARE PRESENTED WITHOUT WARRANTY OF ANY KIND, EXPRESS OR IMPLIED. USERS MUST TAKE FULL RESPONSIBILITY FOR THEIR APPLICATION OF ANY PRODUCTS.

THE SOFTWARE LICENSE AND LIMITED WARRANTY FOR THE ACCOMPANYING PRODUCT ARE SET FORTH IN THE INFORMATION PACKET THAT SHIPPED WITH THE PRODUCT AND ARE INCORPORATED HEREIN BY THIS REFERENCE. IF YOU ARE UNABLE TO LOCATE THE SOFTWARE LICENSE OR LIMITED WARRANTY, CONTACT YOUR CISCO REPRESENTATIVE FOR A COPY.

The following information is for FCC compliance of Class A devices: This equipment has been tested and found to comply with the limits for a Class A digital device, pursuant to part 15 of the FCC rules. These limits are designed to provide reasonable protection against harmful interference when the equipment is operated in a commercial environment. This equipment generates, uses, and can radiate radio-frequency energy and, if not installed and used in accordance with the instruction manual, may cause harmful interference to radio communications. Operation of this equipment in a residential area is likely to cause harmful interference, in which case users will be required to correct the interference at their own expense.

The following information is for FCC compliance of Class B devices: This equipment has been tested and found to comply with the limits for a Class B digital device, pursuant to part 15 of the FCC rules. These limits are designed to provide reasonable protection against harmful interference in a residential installation. This equipment generates, uses and can radiate radio frequency energy and, if not installed and used in accordance with the instructions, may cause harmful interference to radio communications. However, there is no guarantee that interference will not occur in a particular installation. If the equipment causes interference to radio or television reception, which can be determined by turning the equipment off and on, users are encouraged to try to correct the interference by using one or more of the following measures:

- Reorient or relocate the receiving antenna.
- Increase the separation between the equipment and receiver.
- Connect the equipment into an outlet on a circuit different from that to which the receiver is connected.
- Consult the dealer or an experienced radio/TV technician for help.

Modifications to this product not authorized by Cisco could void the FCC approval and negate your authority to operate the product.

The Cisco implementation of TCP header compression is an adaptation of a program developed by the University of California, Berkeley (UCB) as part of UCB's public domain version of the UNIX operating system. All rights reserved. Copyright © 1981, Regents of the University of California.

NOTWITHSTANDING ANY OTHER WARRANTY HEREIN, ALL DOCUMENT FILES AND SOFTWARE OF THESE SUPPLIERS ARE PROVIDED "AS IS" WITH ALL FAULTS. CISCO AND THE ABOVE-NAMED SUPPLIERS DISCLAIM ALL WARRANTIES, EXPRESSED OR IMPLIED, INCLUDING, WITHOUT LIMITATION, THOSE OF MERCHANTABILITY, FITNESS FOR A PARTICULAR PURPOSE AND NONINFRINGEMENT OR ARISING FROM A COURSE OF DEALING, USAGE, OR TRADE PRACTICE.

IN NO EVENT SHALL CISCO OR ITS SUPPLIERS BE LIABLE FOR ANY INDIRECT, SPECIAL, CONSEQUENTIAL, OR INCIDENTAL DAMAGES, INCLUDING, WITHOUT LIMITATION, LOST PROFITS OR LOSS OR DAMAGE TO DATA ARISING OUT OF THE USE OR INABILITY TO USE THIS MANUAL, EVEN IF CISCO OR ITS SUPPLIERS HAVE BEEN ADVISED OF THE POSSIBILITY OF SUCH DAMAGES.

Any Internet Protocol (IP) addresses and phone numbers used in this document are not intended to be actual addresses and phone numbers. Any examples, command display output, network topology diagrams, and other figures included in the document are shown for illustrative purposes only. Any use of actual IP addresses or phone numbers in illustrative content is unintentional and coincidental.

All printed copies and duplicate soft copies of this document are considered uncontrolled. See the current online version for the latest version.

Cisco has more than 200 offices worldwide. Addresses and phone numbers are listed on the Cisco website at www.cisco.com/go/offices.

Cisco and the Cisco logo are trademarks or registered trademarks of Cisco and/or its affiliates in the U.S. and other countries. To view a list of Cisco trademarks, go to this URL: https://www.cisco.com/c/en/us/about/legal/trademarks.html. Third-party trademarks mentioned are the property of their respective owners. The use of the word partner does not imply a partnership relationship between Cisco and any other company. (1721R)

© 2017–2021 Cisco Systems, Inc. All rights reserved.



CONTENTS

CHAPTER 1 **Accessories Overview** 1

Accessory Support 1

Accessory Support for the Cisco IP Phone 7800 Series 1

Accessory Support for the Cisco IP Phone 8800 Series 3

New and Changed Information 5

New and Changed for Firmware Release 14.0(1) 5

New and Changed Information for Firmware Release 12.8(1) 5

New and Changed for Firmware Release 12.7(1) 6

New Information for Firmware Release 12.6(1) 6

New Information for Firmware Release 12.5(1)SR3 7

New Information for Firmware Release 12.5(1)SR2 7

New and Changed for Firmware Release 12.5(1) and 12.5(1)SR1 7

New Accessories Information for 12.1(1)SR1 7

New Accessories Information for 12.1(1) 8

Cisco One-Year Limited Hardware Warranty Terms 8

CHAPTER 2 **Headsets** 9

Important Headset Safety Information 9

Cisco Headset 500 Series 9

Cisco Headset 521 and 522 Controller Buttons and Hardware 13

Cisco Headset 531 and 532 USB Adapter Buttons and Hardware 14

Cisco Headset 561 and 562 Buttons and LED 15

Cisco Headset 561 and 562 Standard Base 17

Cisco Headset 561 and 562 with Multibase 18

Cisco Headset 700 Series 20

Cisco Headset 730 Buttons and Hardware 20

Third Party Headsets 23
Audio Quality 24
Wired Headsets 24
Bluetooth Wireless Headsets 24
Wireless Headsets 26
Cisco Headset Configuration on Cisco Unified Communications Manager 26
Set Up a Headset for a Single Phone 27
Headset Parameters on Cisco Unified Communications Manager 28
Set Up Wideband Codec 29
Headset Management on Older Versions of Cisco Unified Communications Manager 30
Download the Default Headset Configuration File 30
Modify the Default Headset Configuration File 31
Install the Default Configuration File on Cisco Unified Communications Manager 33
Restart the Cisco TFTP Server 34
Connect a Headset to Your Phone 34
Connect a Standard Headset 34
Connect a USB Headset 35
Connect a Cisco Standard Base with the Y-Cable 35
Connect the Multibase to a Bluetooth Device 36
Disconnect the Multibase from a Bluetooth Device 36
Erase All Bluetooth Pairings 36
Postpone a Phone Upgrade 37
Cisco Headset Customization 37
Cisco Headset 500 Series Customization 37
Adjust Your Bass and Treble 37
Adjust Your Speaker Sidetone 38
Adjust Your Microphone Volume 38
Cisco Headset 700 Series Customization 38
Set the Cisco Headset 730 Noise Cancellation Level 38
Set the Cisco Headset 730 Sidetone Level 39
Set the Cisco Headset 730 General Settings 39
Reset the Cisco Headset 730 Settings 40
View the Cisco Headset 730 Details 40
Change Your Headset Ringer Settings 40

Test Your Microphone 41
Update Your Cisco Headset Firmware With a Cisco IP Phone 41
Configure a Headset on the Phone 41
Reset Cisco Headset Settings from Your Phone 42
Adjust the Headset Feedback 42
Turn Bluetooth On or Off 42
Add a Bluetooth Headset 43
Disconnect a Bluetooth Headset 43
Remove a Bluetooth Headset 43
Set Up a Wideband Standard Headset 44
Enable Electronic Hookswitch Control on Your Phone 44
Make a Call with a Standard Headset 44
Audio Path Selection 45
Swap Headsets While on a Call 45
Troubleshoot Your Cisco Headset 45
Confirm that Your Headset Is Registered 46
No Sound in Headset 46
Poor Audio 46
Microphone Not Picking up Sound 47
Headset Not Charging 47
Headset Battery Not Holding a Charge 48

CHAPTER 3 **Key Expansion Modules** 49
Cisco IP Phone Key Expansion Module Setup Overview 49
Key Expansion Module Buttons 52
Column Mode for the Cisco IP Phone 8800 Key Expansion Module 53
Key Expansion Module Configuration on Cisco Unified Communications Manager 55
Set up the Key Expansion Module in Cisco Unified Communications Manager 55
Custom Background Images 56
Connect a Key Expansion Module to a Cisco IP Phone 56
Configure a Key Expansion Module on the Phone 60
Change the Wallpaper 60
Adjust the Key Expansion Module Screen Brightness 61
Place a Call on the Key Expansion Module 61

Troubleshoot the Key Expansion Module 61
Access Key Expansion Module Setup 62
Reset the Single LCD Screen Key Expansion Module 62
Reset the Dual LCD Screen Key Expansion Module 63
Key Expansion Module Power Information 63

CHAPTER 4 **Wall Mount Kits** 65
Wall Mount Kits 65
Wall Mount Components 66
Install a Spare Wall Mount Kit 71
Attach the Wall Bracket to the Wall 71
Attach the Phone Bracket to the Phone 74
Attach the Cables to the Phone 76
Attach the Phone to the Wall Bracket 76
Remove the Phone from the Wall Mount Kit 78
Adjust the Handset Rest on Your Phone 79

CHAPTER 5 **Other Accessories** 81
Silicone Covers 81
Install the Cisco IP Phone Silicone Cover 82
Install the Cisco IP Phone Handset Cover 83
Clean the Silicone Cover 84
Connect the Footstand 84
Secure the Phone with a Cable Lock 85
External Speakers and Microphone 85

CHAPTER 6 **Product Safety and Security** 87
Compliance Statements 87
Compliance Statements for the European Union 87
CE Marking 87
Compliance Statements for Canada 87
FCC Compliance Statements 88
FCC Part 15.21 Statement 88
FCC RF Radiation Exposure Statement 88

FCC Receivers and Class B Digital Statement 88
Cisco Product Security Overview 88
Important Online Information 89

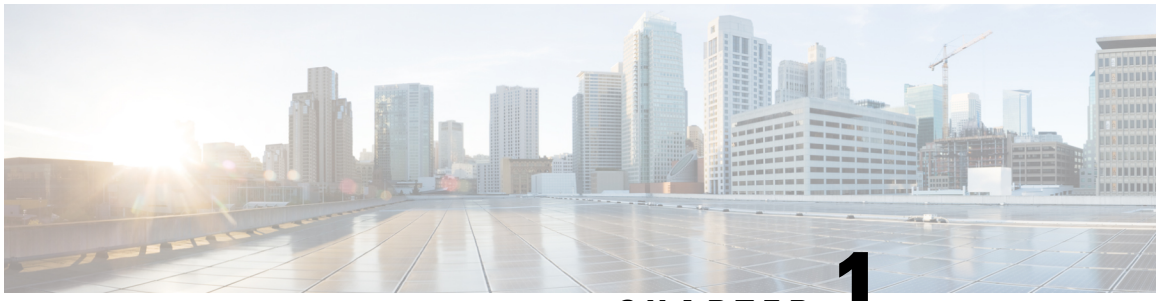

CHAPTER 1

Accessories Overview

- Accessory Support, on page 1
- New and Changed Information, on page 5
- Cisco One-Year Limited Hardware Warranty Terms, on page 8

Accessory Support

Cisco IP Phones support many different accessories, including headsets, external speakers, wall mount kits, and key expansion modules. Accessory support varies between phone models, so review the information in this chapter before you purchase or use an accessory.

In addition to the accessories listed in this document, you may be able to purchase other items for your phone such as power cords, power cubes, or spare bezels. For more information, consult your phone's data sheet.

- The Cisco IP Phone 8800 Series data sheets can be viewed here: http://www.cisco.com/c/en/us/products/collaboration-endpoints/unified-ip-phone-8800-series/datasheet-listing.html.
- The Cisco IP Phone 7800 Series data sheets can be viewed here: http://www.cisco.com/c/en/us/products/collaboration-endpoints/unified-ip-phone-7800-series/datasheet-listing.html.

Related Topics

Third Party Headsets, on page 23
Cisco IP Phone Key Expansion Module Setup Overview, on page 49
Wall Mount Kits, on page 65

Accessory Support for the Cisco IP Phone 7800 Series

Use the information in the following table to guide you as you select an accessory.

Table 1: Accessory Support for the Cisco IP Phone 7800 Series

Accessory	Type	7811	7821	7841	7861
Cisco Accessory					
Wall Mount Kit		Supported	Supported	Supported	Supported

Accessory	Type	7811	7821	7841	7861
Footstand		Supported (non-adjustable)	Supported	Supported	Supported
Cisco Headset 530 Series	Analog Cisco IP Phone 7821, 7841, and 7861 cannot detect when an analog headset is plugged into it. The headset is displayed in the Accessories window.	Not supported	Supported	Supported	Supported
Cisco Headset 561 and 562	Analog Cisco IP Phone 7821, 7841, and 7861 cannot detect when an analog headset is plugged into it. The headset is displayed in the Accessories window.	Not supported	Supported	Supported	Supported
Cisco Headset 730	USB	Not supported	Not supported	Not supported	Not supported
Cisco Headset 730	Bluetooth	Not supported	Not supported	Not supported	Not supported
Third-Party Accessories					
Headsets	Analog Cisco IP Phone 7821, 7841, and 7861 cannot detect when an analog headset is plugged into it. The headset is displayed in the Accessories window.	Not supported	Supported	Supported	Supported
Headsets	Analog Wideband	Not supported	Supported	Supported	Supported
Headsets	Wired	Not supported	Supported	Supported	Supported
Headsets	USB	Not supported	Not supported	Not supported	Not supported
Headsets	Electronic hookswitch	Not supported	Supported	Supported	Supported
Headsets	Bluetooth	Not supported	Not supported	Not supported	Not supported

Accessory	Type	7811	7821	7841	7861
Cable Lock		Not supported	Not supported	Not supported	Not supported
Microphone	External PC	Not supported	Not supported	Not supported	Not supported
Speakers	External PC	Not supported	Not supported	Not supported	Not supported

Accessory Support for the Cisco IP Phone 8800 Series

Use the information in the following table to guide you as you select an accessory.

Table 2: Accessory Support for the Cisco IP Phone 8800 Series

Accessory	Type	8811 and 8841	8845	8851	8851NR	8861	8865	8865NR
Cisco Accessory								
Cisco IP Phone 8800 Key Expansion Module	Add-on module	Not supported	Not supported	Supported Supports up to 2 expansion modules.	Supported Supports up to 2 expansion modules.	Supported Supports up to 3 expansion modules.	Supported Supports up to 3 expansion modules.	Supported Supports up to 3 expansion modules.
Cisco IP Phone 8851/8861 Key Expansion Module	Add-on module	Not supported	Not supported	Supported Supports up to 2 expansion modules of the same type.	Supported Supports up to 2 expansion modules of the same type.	Supported Supports up to 3 expansion modules of the same type.	Not supported	Not supported
Cisco IP Phone 8865 Key Expansion Module	Add-on module	Not supported	Not supported	Not supported	Not supported	Not supported	Supported Supports up to 3 expansion modules of the same type.	Supported Supports up to 3 expansion modules of the same type.
Wall Mount Kit		Supported	Supported	Supported	Supported	Supported	Supported	Supported
Footstand		Supported	Supported	Supported	Supported	Supported	Supported	Supported
Cisco Headset 521 and 522	USB	Not Supported	Not Supported	Supported	Supported	Supported	Supported	Supported
Cisco Headset 530 Series	Standard	Supported	Supported	Supported	Supported	Supported	Supported	Supported

Accessory	Type	8811 and 8841	8845	8851	8851NR	8861	8865	8865NR
Cisco Headset 530 Series	USB Adapter	Not supported	Not supported	Supported	Supported	Supported	Supported	Supported
Cisco Headset 561 and 562	Standard	Supported	Supported	Supported	Supported	Supported	Supported	Supported
Cisco Headset 561 and 562	USB	Not supported	Not supported	Supported	Supported	Supported	Supported	Supported
Cisco Headset 730	USB	Not supported	Not supported	Not supported	Supported	Supported	Supported	Supported
Cisco Headset 730	Bluetooth	Not supported	Not supported	Supported	Supported	Not supported	Supported	Not supported
Third-Party Accessories								
Headsets	Analog	Supported	Supported	Supported	Supported	Supported	Supported	Supported
Headsets	Analog Wideband	Supported	Supported	Supported	Supported	Supported	Supported	Supported
Headsets	Bluetooth	Not supported	Supported	Supported	Not supported	Supported	Supported	Not supported
Headsets	USB	Not supported	Not supported	Supported	Supported	Supported	Supported	Supported
Headsets	Electronic Hookswitch	Supported See Note 1.	Supported See Note 1.	Supported See Note 2.	Supported See Note 2.	Supported See Note 2.	Supported See Note 2.	Supported See Note 2.
Microphones	External PC	Not supported	Not supported	Not supported	Not supported	Supported	Supported	Supported
Cable Lock		Supported	Supported	Supported	Supported	Supported	Supported	Supported
Speakers	External PC	Not supported	Not supported	Not supported	Not supported	Supported	Supported	Supported

Note Electronic Hookswitch headset users should be aware of the following:

1. The Electronic Hookswitch headset connects to Cisco IP Phone 8811, 8841, and 8845 with the auxiliary port.
2. The Electronic Hookswitch headset connects to Cisco IP Phone 8851NR and 8865NR with the auxiliary port, or the USB port.
3. The Electronic Hookswitch headset connects to Cisco IP Phone 8851, 8861, and 8865 with the auxiliary port, the USB port, or with Bluetooth.

New and Changed Information

New and Changed for Firmware Release 14.0(1)

Table 3: Cisco IP Phone 7800 and 8800 Series Accessories Guide Revisions for Firmware Release 14.(1)

Feature	New and Changed
Cisco IP Phone Silicone Covers	Silicone Covers, on page 81
New Menu Setting for the Cisco Headset 500 Series	Change Your Headset Ringer Settings, on page 40
Headset Upgrade Progress Indicator	Update Your Cisco Headset Firmware With a Cisco IP Phone, on page 41

New and Changed Information for Firmware Release 12.8(1)

Changes	Content Updated
Add the specifications for the screws that fasten the key expansion module spine connector and the phone.	Connect a Key Expansion Module to a Cisco IP Phone, on page 56

New and Changed for Firmware Release 12.7(1)

Table 4: Cisco IP Phone 7800 and 8800 Series Accessories Guide Revisions for Firmware Release 12.7(1)

Revision	Updated Section
Cisco Headset 730 Support	Updated sections: • Cisco Headset Configuration on Cisco Unified Communications Manager, on page 26 • Accessory Support for the Cisco IP Phone 7800 Series, on page 1 • Accessory Support for the Cisco IP Phone 8800 Series, on page 3 New sections: • Headset Management on Older Versions of Cisco Unified Communications Manager, on page 30 • Cisco Headset 700 Series Customization, on page 38 • Set the Cisco Headset 730 Noise Cancellation Level, on page 38 • Set the Cisco Headset 730 Sidetone Level, on page 39 • Set the Cisco Headset 730 General Settings, on page 39 • Reset the Cisco Headset 730 Settings, on page 40 • View the Cisco Headset 730 Details, on page 40
Updated for E-hook.	Enable Electronic Hookswitch Control on Your Phone, on page 44
Cisco Headset 500 Series Firmware Release 1.5 change	Erase All Bluetooth Pairings, on page 36
Updated for wallpaper support on key expansion modules	• Custom Background Images, on page 56 • Change the Wallpaper, on page 60

New Information for Firmware Release 12.6(1)

No accessories guide updates were required for Firmware Release 12.6(1).

New Information for Firmware Release 12.5(1)SR3

Table 5: Cisco IP Phone 7800 and 8800 Series Accessories Guide Revisions for Firmware Release 12.5(1)SR3.

Revision	Updated Section
Reset Cisco Headset Settings to the Administration settings	Reset Cisco Headset Settings from Your Phone, on page 42

New Information for Firmware Release 12.5(1)SR2

No documentation updates were required for Firmware Release 12.5(1)SR2.

Firmware Release 12.5(1)SR2 replaces Firmware Release 12.5(1) and Firmware 12.5(1)SR1. Firmware Release 12.5(1) and Firmware Release 12.5(1)SR1 have been deferred in favor of Firmware Release 12.5(1)SR2.

New and Changed for Firmware Release 12.5(1) and 12.5(1)SR1

Table 6: Cisco IP Phone 7800 and 8800 Series Accessories Guide Revisions for Firmware Release 12.5(1) and 12.5(1)SR1.

Revision	Updated Section
Cisco Headset 561 and 562	Cisco Headset 500 Series, on page 9
Cisco Headset 561 and 562 Multibase	Cisco Headset 561 and 562 with Multibase, on page 18
Support for Remote Configuration of Headset Parameters	Headset Management on Older Versions of Cisco Unified Communications Manager, on page 30

New Accessories Information for 12.1(1)SR1

Table 7: Cisco IP Phone 7800 and 8800 Series Accessories Guide Revisions for Firmware Release 12.1(1)SR1.

Revision	Updated Section
Updated for Cisco Wallpaper on Key Expansion Modules.	Change the Wallpaper, on page 60

New Accessories Information for 12.1(1)

Table 8: Cisco IP Phone 7800 and 8800 Series Accessories Guide Revisions for Firmware Release 12.1(1).

Revision	Updated Section
Updated for Cisco Headset 531 and Cisco Headset 532.	Cisco Headset 500 Series, on page 9
	Cisco Headset Customization, on page 37
	Adjust Your Microphone Volume, on page 38
	Adjust Your Speaker Sidetone, on page 38
	Adjust Your Bass and Treble, on page 37
Cisco Headset 521 and 522	Cisco Headset 500 Series, on page 9

Cisco One-Year Limited Hardware Warranty Terms

Special terms apply to your hardware warranty and services that you can use during the warranty period.

Your formal Warranty Statement, including the warranties and license agreements applicable to Cisco software, is available on Cisco.com at this URL: https://www.cisco.com/go/hwwarranty.

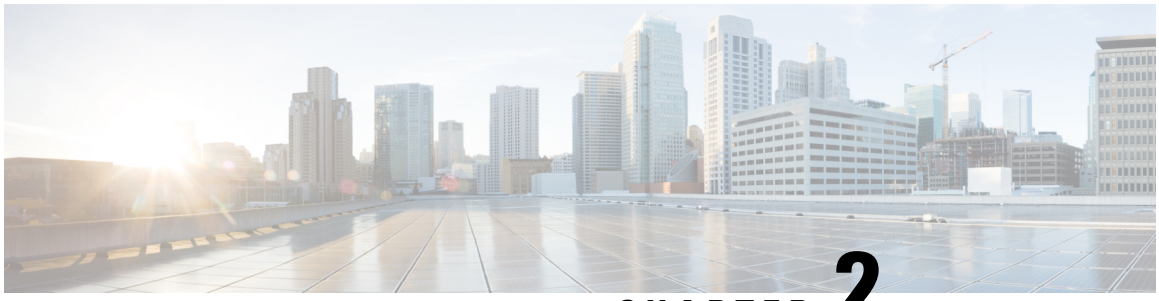

CHAPTER 2

Headsets

- Important Headset Safety Information, on page 9
- Cisco Headset 500 Series, on page 9
- Cisco Headset 700 Series, on page 20
- Third Party Headsets, on page 23
- Cisco Headset Configuration on Cisco Unified Communications Manager, on page 26
- Connect a Headset to Your Phone, on page 34
- Postpone a Phone Upgrade, on page 37
- Cisco Headset Customization, on page 37
- Configure a Headset on the Phone, on page 41
- Make a Call with a Standard Headset, on page 44
- Audio Path Selection, on page 45
- Swap Headsets While on a Call, on page 45
- Troubleshoot Your Cisco Headset, on page 45

Important Headset Safety Information

High Sound Pressure—Avoid listening to high volume levels for long periods to prevent possible hearing damage.

When you plug in your headset, lower the volume of the headset speaker before you put the headset on. If you remember to lower the volume before you take the headset off, the volume will start lower when you plug in your headset again.

Be aware of your surroundings. When you use your headset, it may block out important external sounds, particularly in emergencies or in noisy environments. Don't use the headset while driving. Don't leave your headset or headset cables in an area where people or pets can trip over them. Always supervise children who are near your headset or headset cables.

Cisco Headset 500 Series

The following Cisco headsets are available:

- Cisco Headset 521—A headset with a single earpiece that comes with an inline USB controller.

- Cisco Headset 522—A headset with a dual earpiece that comes with an inline USB controller.
- Cisco Headset 531—A headset with a single earpiece that can be used as either a standard headset or a USB headset with the USB adapter.
- Cisco Headset 532—A standard headset with a dual earpiece that can be used as either a standard headset or a USB headset with the USB adapter.
- Cisco Headset 561—A wireless headset with a single earpiece that comes with a base.
- Cisco Headset 562—A wireless headset with a dual earpiece that comes with a base.

Cisco Headset 521 and 522

The Cisco Headset 521 and 522 are two wired headsets that have been developed for use on Cisco IP Phones and devices. The Cisco Headset 521 features a single earpiece for extended wear and comfort. The Cisco Headset 522 features two earpieces for use in a noisy workplace.

Both headsets feature a 3.5-mm connector for use on laptops and mobile devices. An inline USB controller is also available for use on the Cisco IP Phone 8851, 8851NR, 8861, 8865, and 8865NR. The controller is an easy way answer your calls, and to access basic phone features such as hold and resume, mute, and volume control.

Phone Firmware Release 12.1(1) and later is required for these headsets to function properly.

Figure 1: Cisco Headset 521



Figure 2: Cisco Headset 522



Cisco Headset 531 and 532

The Cisco Headset 531 and 532 can be used as standard headsets on the phones. You plug the headset into the headset port using the RJ connector.

The Cisco Headset USB Adapter is also available for use on the Cisco IP Phone 8851, 8851NR, 8861, 8865, and 8865NR. The adapter converts the Cisco Headset 531 and 532 into a USB headset, and it gives you a few extra features. It provides a convenient way to handle calls, to test your microphone, and to customize your bass and treble, gain, and sidetone settings.

Phone Firmware Release 12.1(1) and later is required for the headsets to function properly.

Figure 3: Cisco Headset 531



Figure 4: Cisco Headset 532



Cisco Headset 561 and 562

Cisco Headset 561 and 562 are two wireless headsets that have been developed for use in today's office. The Cisco Headset 561 features a single earpiece for extended wear and comfort. Cisco Headset 562 features two earpieces for use in a noisy workplace.

Both headsets come with either the Standard base or the Multibase for charging your headset, and for monitoring the headset power level with the LED display. Both bases also displays your call status, such as incoming call, active call, and calls on mute. If your headset is upgrading the firmware, then the LEDs show the upgrade progress.

The base connects to the phone using either a USB connector or a Y cable depending upon your phone model and your personal preference. The Y cable plugs into the AUX and headset ports of the phone.

An AC plug is included for connecting the base to a power outlet. You have to install the power clip for your region before you can plug in the power adapter.

Occasionally a tone is played over your Cisco Headset 561 or 562. Some of these tones alert you when you perform an action, such as pressing a button. Other tones warn you that the headset requires attention, such as when the battery needs recharging, or when you are too far from the base station.

Phone Firmware Release 12.5(1) or later and the defaultheadsetconfig.json file for the Cisco Headset 561 and 562 to function properly with Cisco Unified Communications Manager 12.5(1) or earlier.

Figure 5: Cisco Headset 561



Figure 6: Cisco Headset 562



Cisco Headset 500 Series Support

The Cisco IP Phone 7811 is the only phone in the Cisco IP Phone 7800 Series that does not support a headset. The Cisco IP Phone 7821, 7841, and 7861 use an RJ-style connector to connect with a headset or base.

The Cisco IP Phone 8800 Series has both RJ-style connectors and USB ports to connect to headsets and bases to a phone. But the type of connection depends upon your phone model. The following table describes headset connection and phone model support on the Cisco IP Phone 8800 Series.

Table 9: Headset Support on the Cisco IP Phone 8800 Series.

Cisco Headset 500 Series	Cisco IP Phone 8811 Cisco IP Phone 8841 Cisco IP Phone 8845	Cisco IP Phone 8851 Cisco IP Phone 8851NR Cisco IP Phone 8861 Cisco IP Phone 8865 Cisco IP Phone 8865NR
Cisco Headset 521 Cisco Headset 522	Not Supported	Supported (With USB Inline Controller)
Cisco Headset 531 Cisco Headset 532	Supported (RJ connector)	Supported (RJ connector or with USB Adapter)
Cisco Headset 561 Cisco Headset 562	Supported (Y-cable)	Supported (Y-cable or USB cable)

Cisco Headset 521 and 522 Controller Buttons and Hardware

Your controller buttons are used for basic call features.

Figure 7: Cisco Headset 521 and 522 Controller

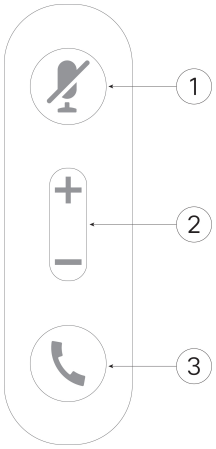

The following table describes the Cisco Headset 521 and 522 controller buttons.

Table 10: Cisco Headset 521 and 522 Controller Buttons

Number	Name	Description
1	Mute button	Toggle the microphone on and off.
2	Volume button	Adjust the volume on your headset.

Number	Name	Description
3	Call	Use to manage calls: • Press once to answer an incoming call. • Press and hold to end a call. • Press twice to reject an incoming call. • Press once to put an active call on hold. Press again to retrieve a call from hold. • Press once to put an active call on hold, and to answer an incoming call.

Cisco Headset 531 and 532 USB Adapter Buttons and Hardware

Your adapter is used for basic call features.

Figure 8: Cisco Headset USB Adapter

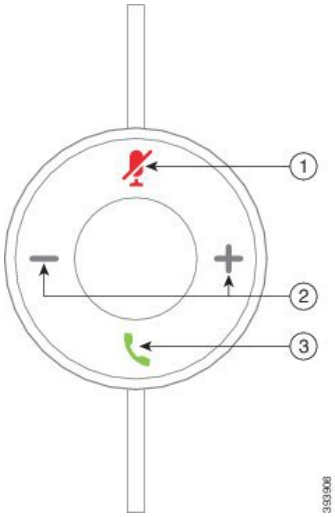

The following table describes the Cisco Headset USB Adapter buttons.

Table 11: Cisco USB Adapter Buttons

Number	Name	Description
1	Mute button	Toggle the microphone on and off.
2	Volume button	Adjust the volume on your headset.

Number	Name	Description
3	Call button	Use to place, answer, and manage your calls: • Press once to place a call. • Press once to answer an incoming call. Press twice to reject an incoming call. • Press once to put an active call on hold, and to answer an incoming call. • Press once to put an active call on hold. • Press and hold to end a call.

Cisco Headset 561 and 562 Buttons and LED

Your headset buttons are used for basic call features.

Figure 9: Cisco Headset 561 and 562 Headset Buttons

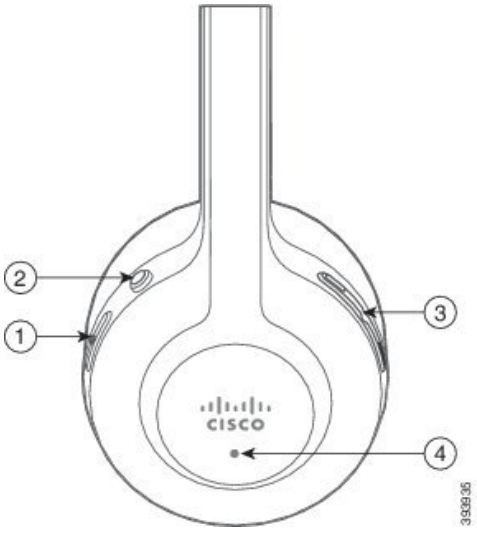

The following table describes the Cisco Headset 561 and 562 Headset buttons.

Table 12: Cisco Headset 561 and 562 Headset Buttons

Number	Name	Description
1	Power and Call button	Use to power the headset on and off. Press and hold for 4 seconds to power on and off the headset. Incoming and active call management depends upon if you have one call or multiple calls. One call: • Press once to answer incoming calls. • Press once to put an active call on hold. Press again to retrieve a call from hold. • Press twice to reject an incoming call. • Press and hold to end an active call. Multiple calls: • Press once to put an active call on hold, and to answer a second incoming call. • Press once to put a current call on hold. Press again to resume a call, or press and hold for 2 seconds to end the current call and to resume a held call. • Press and hold to end an active call, and to answer another incoming call. • Press twice to stay on a current call, and to reject a second incoming call.
2	Mute button	Toggle the microphone on and off. The Mute  on the phone lights when Mute on the headset is enabled.
3	Volume button	Adjust the volume on your headset.
4	LED	Shows the headset status: • Blinking red—Incoming call. • Steady red—Active call. • Blinking white—Firmware upgrade is in progress.

Cisco Headset 561 and 562 Standard Base

The standard base charges your headset and has LEDs that shows your headset's battery level and call state. You can also answer and end calls when you lift or place your headset on the base.

The standard base comes with the following connector cables:

- USB to USB Cable: for devices with USB connectivity
- USB Y-Cable: for Cisco IP Phones without a USB port
- USB-A to USB-C Cable: available separately for PC or Mac devices

Figure 10: Standard Base LEDs

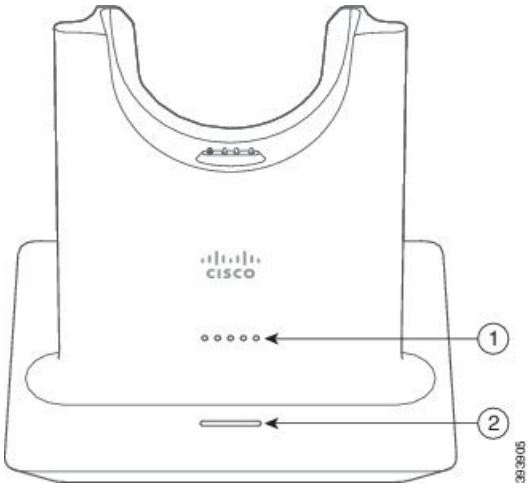

The following table describes the standard base

Table 13: Standard Base LEDs

Number	Name	Description
1	Battery Status LED	Indicates the headset battery charge and base status: • Headset battery strength—LEDs blink and change to solid as the battery charges • Headset update in progress—LEDs blink in sequence, left to right • Headset and base not paired—All LEDs blink • Power save mode—Middle LED shows solid The base enters power save mode when there is no call source connectivity after 10 minutes.

Number	Name	Description
2	Call Status LED	Alerts you to the call state: • Incoming call—Blinking green • Active call—Steady green • Muted call—Steady red

Cisco Headset 561 and 562 with Multibase

The multibase can connect up to three call sources through Bluetooth, the USB connector, or the Y-cable. The multibase can save up to four Bluetooth devices. You can switch between call sources using the buttons on the multibase. You use the call control buttons on the headset to answer and end calls. When your headset is in the base, you automatically answer the call when you remove the headset from the base. You can return the headset to the base to end the call.

The multibase comes with the following connector cables:

- USB to USB Cable: for Cisco IP Phones with USB connectivity
- USB Y-Cable: for Cisco IP Phones without a USB port
- Mini USB Cable: for PC or Mac.
- Mini USB to USB-C cable: available separately for PC or Mac devices.

Note The Cisco Headset 560 Multibase is incompatible with Cisco IP Phone 7800 Series phones using Power over Ethernet (PoE). Use the external power supply if you intend to connect the multibase.

Figure 11: Multibase LEDs

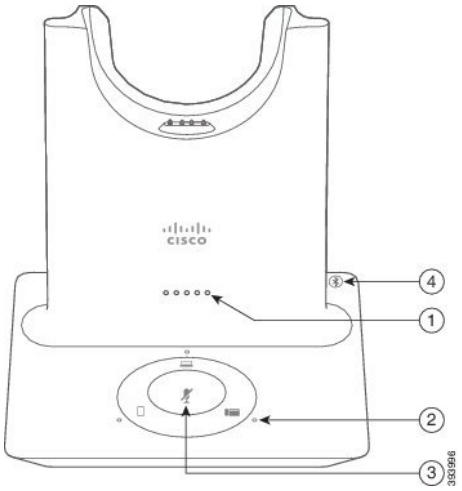

The following table describes the Cisco Headset 560 Series Multibase multibase LEDs.

Table 14: Multibase LEDs

Number	Name	Description
1	Battery Status LED	Indicates the headset battery charge and base status: • Headset battery strength—LEDs blink and change to solid as the battery charges • Headset update in progress—LEDs blink in sequence, left to right • Headset and base not paired—All LEDs blink • Power save mode—Middle LED shows solid The base enters power save mode when there is no call source connectivity after 10 minutes.
2	Call Status LEDs	Alerts you to the call state of each source: • Active Source—Steady white • Incoming call on a selected source—Blinks green • Incoming call on an unselected source—Blinks green • Active call—Steady green • Call on an inactive source—Pulses green
3	Mute Status LED	Alerts you when your headset is muted.
4	Bluetooth Status LED	Alerts you to the Bluetooth status: • Paired with a call source—Steady white • Pairing mode—Blinking white • Searching for a call source—Pulse white • Bluetooth is Off—LED is off

You use the source control buttons on the base to control the active source. Each source button corresponds with a specific connection on the multibase.

Even if you are connected to a source, the LED may not be lit. The source LED only lights when the source is selected or has an active call. For example, you may be properly connected to a Cisco IP Phone, your PC, and your mobile phone through Bluetooth. However, the respective source LED is only lit when it is selected, has an active call, or has an incoming call. Press the source button to check if a source is properly connected. The source LED flashes three times if there is no connection.

You can alternate between active call sources.

Note Place an active call on hold before you change to a different call source. Calls on one call source aren't automatically put on hold when you switch to a different call source.

Cisco Headset 700 Series

The Cisco Headset 730 is a wireless headset that uses Bluetooth connectivity to pair with Cisco soft clients and Cisco IP Phones. The headset features full call control and music playback capabilities in addition to powerful noise cancellation and ambient audio enhancement systems for use in a busy office environment.

The Cisco Headset 730 comes with a USB Bluetooth Adapter for use with devices that don't offer a reliable Bluetooth solution. The headset can also connect to devices with the included USB-C to USB-A cable. The USB-C cable also acts as a charging cable and can connect to any powered USB adapter. The USB-C cable can also be plugged into the phone USB port to give full functionality, including call control, local tuning and setup, and firmware upgrades.

For more information see: https://www.cisco.com/c/en/us/products/collaboration-endpoints/headset-700-series/index.html

Cisco Headset 730 Buttons and Hardware

Your headset buttons are used for many features. Each cup has different buttons and functions.

Figure 12: Left and Right Sides of the Cisco Headset 730

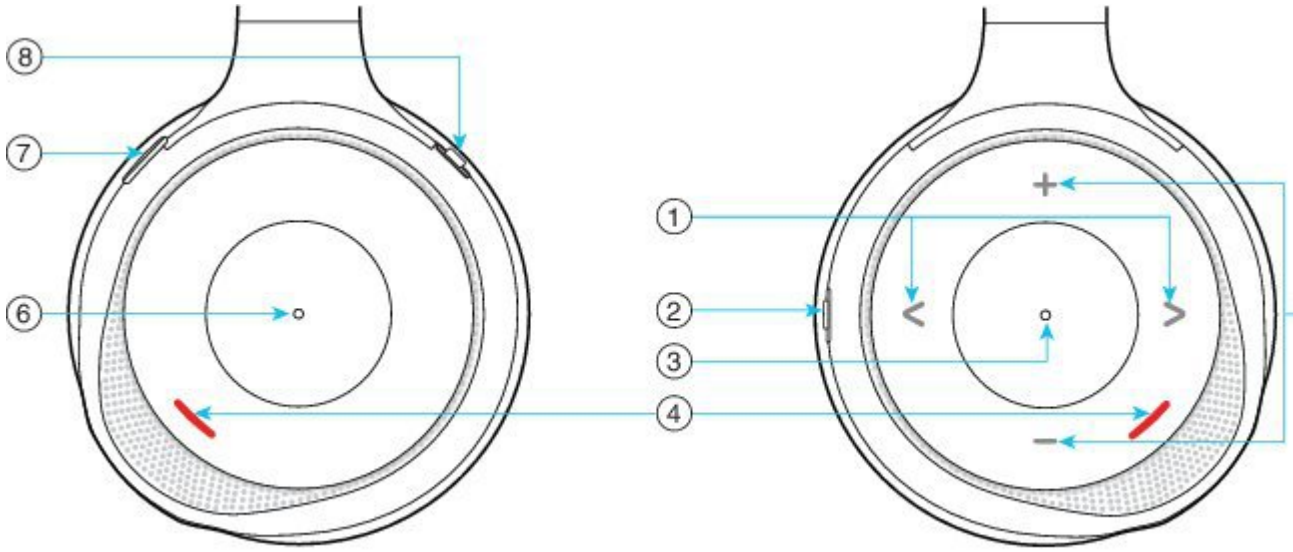

Table 15: Cisco Headset 730 Buttons

Callout Number	Name	Description
1	Skip music track This is the right and left of the right cup face. 	Skip forward and backward through music tracks. Only available if you have the headset paired to a device that can play music.
2	AMB and NC button This button is located on the back of the right cup. 	Three position switch: • AMB: Slide to the top to enable ambient mode. • No ambient mode or noise cancellation: Middle position. • NC: Slide to the bottom to enable noise cancellation.
3	Pause and Play This is the center of the right cup and is marked with a dot. 	Press to play or to pause your music. Only available if you have the headset paired to a device that can play music.
4	Presence LED This LED is located on the face of the cup on both the right and left cup. 	Displays red when you are on a call or if you have pressed the Mute button on the headset when you aren't on a call.

Callout Number	Name	Description
5	Volume This is the top and bottom of the right cup face. 	Press the top or bottom to raise or lower the volume.
6	Call button This is the center of the left cup and is marked with a dot.	Controls the call functions, based on the call state: • Incoming calls • Answer a call: Press once. • Reject a call: Press twice. • Active calls • Hold a call: Press once. • End a call: Press and hold until you hear a tone.
7	Mute This is the button on the front of the left cup.	Toggles the microphone on and off. When muted, the Presence LED lights red and the Mute button on the phone lights.

Callout Number	Name	Description
8	Bluetooth and Power button This is on the back of the left cup. 	Three position switch: • Bluetooth: Slide to the top and hold to pair the headset to the phone. • Power: Slide to the middle position to turn the headset on. Slide down to turn the headset off.

Third Party Headsets

Cisco performs internal testing of third-party headsets for use with Cisco IP Phones. But Cisco does not certify or support products from headset or handset vendors. Check with the headset manufacturer to confirm whether you can use it with your Cisco phone.

Note The Cisco IP Phone 7811 does not support a headset.

Headsets connect to your phone using either the USB or the auxiliary port. Depending upon your headset model, you have to adjust your phone's audio settings for the best audio experience, including the headset sidetone setting.

If you have a third party headset, and you apply a new sidetone setting, then wait one minute and reboot the phone so the setting is stored in flash.

The phone reduces some background noise that a headset microphone detects. You can use a noise canceling headset to further reduce the background noise and improve the overall audio quality.

If you are considering a third part headset, we recommend the use of good quality external devices; for example, headsets that are screened against unwanted radio frequency (RF) and audio frequency (AF) signals. Depending on the quality of headsets and their proximity to other devices, such as mobile phones and two-way radios, some audio noise or echo may still occur. Either the remote party or both the remote party and the Cisco IP Phone user may hear an audible hum or buzz. A range of outside sources can cause humming or buzzing sounds; for example, electric lights, electric motors, or large PC monitors.

Sometimes, use of a local power cube or power injector may reduce or eliminate hum.

Environmental and hardware inconsistencies in the locations where Cisco IP Phones are deployed mean that no single headset solution is optimal for all environments.

We recommend that customers test headsets in the intended environment to determine performance before making a purchasing decision to deploy on a large scale.

You can use only one headset at a time. The most-recently connected headset is the active headset.

For a list of suggested headsets and other audio accessories, see http://www.cisco.com/c/en/us/products/unified-communications/uc_endpoints_accessories.html.

Related Topics

Accessory Support, on page 1

Audio Quality

Beyond physical, mechanical, and technical performance, the audio portion of a headset must sound good to the user and to the party on the far end. Sound quality is subjective, and we cannot guarantee the performance of any third-party headset. However, various headsets from leading headset manufacturers are reported to perform well with Cisco IP Phones.

Cisco doesn't recommend or test any third-party headsets with their products. For information about third-party headset support for Cisco products, go to the manufacturer's web site.

Cisco does test the Cisco headsets with the Cisco IP Phones. For information about Cisco Headsets and Cisco IP Phone support, see https://www.cisco.com/c/en/us/products/collaboration-endpoints/headsets/index.html.

Wired Headsets

A wired headset works with all Cisco IP Phone features, including the Volume and Mute buttons. These buttons adjust the earpiece volume and mute the audio from the headset microphone.

When you install a wired headset, make sure you press the cable into the channel in the phone.

Caution Failure to press the cable into the channel in the phone can lead to cable damage.

Bluetooth Wireless Headsets

Cisco IP Phone 8845, 8851, 8861 and 8865 support Bluetooth. For a list of supported third party headsets, see http://www.cisco.com/c/en/us/products/unified-communications/uc_endpoints_accessories.html.

Bluetooth enables low-bandwidth wireless connections within a range of 66 feet (20 meters). The best performance is in the 3- to 6-foot (1- to 2-meter) range. Bluetooth wireless technology operates in the 2.4 GHz band, which is the same as the 802.11b/g band. Interference issues can occur. We recommend that you:

- Use 802.11a, 802.11n, or 802.11ac that operates in the 5 GHz band.
- Reduce the proximity of other 802.11b/g devices, Bluetooth devices, microwave ovens, and large metal objects.

The Cisco IP Phone uses a shared key authentication and encryption method to connect with headsets. The Cisco IP Phone can connect with up to 50 headsets, one at a time. The last connected headset is used as the default. Pairing is typically performed once for each headset.

After a device is paired, the Bluetooth connection is maintained as long as both devices (phone and headset) are enabled and within range of each other. The connection typically reestablishes itself automatically if either of the devices powers down then powers up. However, some headsets require user action to reestablish the connection.

The Bluetooth icon indicates that Bluetooth is on, whether a device is connected or not.

Potential interference issues can occur. We recommend that you reduce the proximity of other 802.11b/g devices, Bluetooth devices, microwave ovens, and large metal objects. If possible, configure other 802.11 devices to use the 802.11a channels.

For a Bluetooth wireless headset to work, it does not need to be within direct line-of-sight of the phone. But some barriers such as walls or doors can affect the connection. Interference from other electronic devices can also affect performance.

When headsets are more than 30 feet (10 meters) away from the Cisco IP Phone, Bluetooth drops the connection after a 15- to 20-second timeout. The paired headset reconnects when it is comes back into range of the Cisco IP Phone. For certain phone types that operate in power-save modes, you can wake up the headset by tapping on the operational button.

Enable the headset before you add it as a phone accessory.

The phone supports various Handsfree Profile features that allow you to use devices such as Bluetooth wireless headsets for certain tasks. For example, instead of pressing Redial on the phone, you can redial a number from the Bluetooth wireless headset by following instructions from the headset manufacturer.

Cisco IP Phone 8811, 8841, 8851NR, and 8865NR do not support Bluetooth wireless headsets. These hands free features apply to Bluetooth wireless headsets that are used with the Cisco IP Phone8845, 8851, 8861 and 8865:

- Answer a call
- End a call
- Change the headset volume for a call
- Redial
- Caller ID
- Divert
- Hold and Accept
- Release and Accept

Hands free devices have different feature activation methods. Device manufacturers may also use different terms when referring to the same feature.

Important Only one headset type works at any given time. If you use both a Bluetooth headset and an analog headset that are attached to the phone, enabling the Bluetooth headset disables the analog headset. To enable the analog headset, disable the Bluetooth headset. Plugging a USB headset into a phone that has Bluetooth headset enabled disables both the Bluetooth and analog headset. If you unplug the USB headset, you can either enable the Bluetooth headset or disable the Bluetooth headset to use the analog headset.

For information about how to use your Bluetooth wireless headset, see:

- *Cisco IP Phone 8800 Series User Guide*
- User Guides provided with your headset

Wireless Headsets

You can use most wireless headsets with your phone. For a list of supported wireless headsets, see http://www.cisco.com/c/en/us/products/unified-communications/uc_endpoints_accessories.html

Refer to your wireless headset documentation for information about connecting the headset and using the features.

Cisco Headset Configuration on Cisco Unified Communications Manager

The Cisco Headset 500 Series and Cisco Headset 730 is supported by most Cisco Unified Communications Manager (Unified CM) releases. But you should install the latest phone firmware release and device packages before connecting your headset to a phone. When the headset is first connected, it will download the required firmware and begin the upgrade process.

The following tables list the Unified CM parameters and the phone firmware release that is required for your Cisco headset to function.

Table 16: Cisco Headset 500 Series Headset Parameters for Cisco IP Phone 7800 Series

Cisco Headset	Phone Firmware	Product Specific Configuration Parameter	Description
Cisco Headset 531 and 532	Phone Firmware Release 12.1(1) or later	Wideband Headset Wideband Headset UI Control	The headset usually requires about 5 seconds to upgrade.
Cisco Headset 561 and 562	Phone Firmware Release 12.5(1)SR1 or later, and the latest device package	Wireless Headset Hookswitch Control Wideband Headset Wideband Headset UI Control	The headset usually requires 5 to 15 minutes to upgrade, and the base LEDs light in sequence to show the upgrade progress. The user can postpone the upgrade up to 4 times. If you are using the Y cable to connect the headset base to the phone, then you must enable Wireless Headset Hookswitch Control.

Table 17: Cisco Headset 500 Series Parameters for Cisco IP Phone 8800 Series

Cisco Headset	Phone Firmware	Product Specific Configuration Parameter	Description and Usage Guidelines
Cisco Headset 521 and 522	Phone Firmware Release 12.1(1) or later	Side USB Port Back USB Port	The headset usually requires about 5 seconds to upgrade.
Cisco Headset 531 and 532	Phone Firmware Release 12.1(1) or later	Side USB Port Back USB Port	The headset usually requires about 5 seconds to upgrade.
Cisco Headset 561 and 562	Phone Firmware Release 12.5(1)SR1 or later, and the latest device package	Wireless Headset Hookswitch Control Side USB Port Back USB Port	The headset usually requires 5 to 15 minutes to upgrade, and the base LEDs light in sequence to show the upgrade progress. The user can postpone the upgrade up to 4 times. If you are using the Y cable to connect the headset base to the phone, then you must enable Wireless Headset Hookswitch Control. If you are using the USB cable to connect the headset base to the phone, then you must the appropriate USB port.

Table 18: Cisco Headset 700 Series Parameters for Cisco IP Phone 8800 Series

Cisco Headset	Phone Firmware	Product Specific Configuration Parameter	Description and Usage Guidelines
Cisco Headset 730	Phone Firmware Release 12.7(1) or later	Side USB Port Back USB Port	The headset usually requires about 5 seconds to upgrade.

Related Topics

Accessory Support, on page 1

Set Up a Headset for a Single Phone

You can configure a single phone or a group of phones for headset support. To configure a group of phones, use the Common Phone Profile.

Procedure

Step 1 Sign into Cisco Unified Communications Manager Administration as an administrator.

Step 2 Select **Device** > **Phone**

Step 3 Locate the phone associated with the user.

Step 4 Navigate to the Product Specific Configuration Layout pane and set the fields.

Step 5 Check the **Override Common Settings** check box for any changed fields.

Step 6 Click **Save**.

Step 7 Click **Apply Config**.

Step 8 Restart the phone.

Headset Parameters on Cisco Unified Communications Manager

The following table describes the fields in the Product Specific Configuration Layout pane that control headset use.

Table 19: Product Specific Configuration Fields for Headsets

Field Name	Field Type or Choices	Default	Description and Usage Guidelines
Disable Speakerphone and Headset	Check box	Unchecked	Turns off the speakerphone and headset capability of the phone.
Disable Handset	Checkbox	Unchecked	Turns off the handset audio path.
Wireless Headset Hookswitch Control	Disabled Enabled	Disabled	**Note** This parameter is removed from Cisco Unified Communications Manager Software Release 12.5(1)SU2 and later. Enables users to remotely control basic IP phone functionality from the wireless headset. Basic IP phone functionality includes off-hook and on-hook, ring indication, audio volume control, and mute. To use a wireless headset, users connect a base station to the auxiliary port. The base station communicates with the wireless headset.
Wideband Headset	Disabled Enabled	Enabled	Enables or disables the use of a Wideband Headset on the phone. Used in conjunction with User Control Wideband Headset. For more information, see Set Up Wideband Codec, on page 29.
Wideband Headset UI Control	Disabled Enabled	Enabled	Allows the user to use the wideband codec for an analog headset.
Wi-Fi	Disabled Enabled	Enabled	Enables the Cisco IP Phones 8861 and 8865 to connect to the Wi-Fi network. Phones that do not support this feature do not display the field.

Field Name	Field Type or Choices	Default	Description and Usage Guidelines
Side USB Port	Disabled Enabled	Enabled	Controls the ability to use the USB port on the side of the Cisco IP Phones 8851, 8851NR, 8861, 8865, and 8865NR. Phones that do not support this feature do not display the field.
Back USB Port	Disabled Enabled	8861, 8865, and 8865NR: Enabled	Controls the ability to use the USB port on the back of the Cisco IP Phones 8861 and 8865. Phones that do not support this feature do not display the field.
Bluetooth	Disabled Enabled	Enabled	Enables or disables the Bluetooth option on the phone. If disabled, the user cannot enable Bluetooth on the phone. Supported on the Cisco IP Phones 8845, 8851, 8861, and 8865. Phones that do not support this feature do not display the field.
Bluetooth Profiles	Handsfree Human Interface Device	Handsfree	Indicates which Bluetooth profiles on the phone are enabled or disabled.

Set Up Wideband Codec

By default, the G.722 codec is enabled for the Cisco IP Phone. If Cisco Unified Communications Manager is configured to use G.722 and if the far endpoint supports G.722, the call connects using the G.722 codec in place of G.711.

This situation occurs regardless of whether the user has enabled a wideband headset or wideband handset, but if either the headset or handset is enabled, the user may notice greater audio sensitivity during the call. Greater sensitivity means improved audio clarity but also means that the far endpoint can hear more background noise: noise such as rustling papers or nearby conversations. Even without a wideband headset or handset, some users may prefer the additional sensitivity of G.722 distracting. Other users may prefer the additional sensitivity of G.722.

The Advertise G.722 and iSAC Codec service parameter affects whether wideband support exists for all devices that register with this Cisco Unified Communications Manager server or for a specific phone, depending on the Cisco Unified Communications Manager Administration window where the parameter is configured.

Procedure

Step 1 To configure wideband support for all devices:

a) From Cisco Unified Communications Manager Administration, choose **System** > **Enterprise Parameters**
b) Set the Advertise G.722 and iSAC Codec field

The default value of this enterprise parameter is **True**, which means that all Cisco IP Phone Models that register to this Cisco Unified Communications Manager advertise G.722 to Cisco Unified Communications Manager. If each endpoint in the attempted call supports G.722 in the capabilities set, Cisco Unified Communications Manager chooses that codec for the call whenever possible.

Step 2 To configure wideband support for a specific device:

a) From Cisco Unified Communications Manager Administration, choose **Device** > **Phone**.

b) Set the Advertise G.722 and iSAC Codec parameter in the Product Specific Configuration area.

The default value of this product-specific parameter is to use the value that the enterprise parameter specifies. If you want to override this on a per-phone basis, choose **Enabled** or **Disabled**

Headset Management on Older Versions of Cisco Unified Communications Manager

If you have a version of Cisco Unified Communications Manager older than 12.5(1)SU1, you can remotely configure your Cisco headset settings for use with on-premises phones.

Remote headset configuration on Cisco Unified Communication Manager version 10.5(2), 11.0(1), 11.5(1), 12.0(1), and 12.5(1) requires you to download a file from the Cisco Software Download website, edit the file, and then upload the file on the Cisco Unified Communications Manager TFTP server. The file is a JavaScript Object Notification (JSON) file. The updated headset configuration is applied to the enterprise headsets over a 10 to 30-minute time frame to prevent a traffic backlog on the TFTP server.

Note You can manage and configure headsets through Cisco Unified Communications Manager Administration version 11.5(1)SU7.

Note the following as you work with the JSON file:

- The settings aren't applied if you are missing a bracket or brackets in the code. Use an online tool such as JSON Formatter and check the format.
- Set the **updatedTime** setting to the current epoch time or the configuration is not applied. Alternatively, you can increase the **updatedTime** value by +1 to make it larger than the previous version.
- Do not change the parameter name or the setting will not be applied.

For more information on the TFTP service, see the "Manage Device Firmware" chapter of the *Administration Guide for Cisco Unified Communications Manager and IM and Presence Service*.

Upgrade your phones to the latest firmware release before you apply the `defaultheadsetconfig.json` file. The following table describes the default settings you can adjust with the JSON file.

Download the Default Headset Configuration File

Before configuring the headset parameters remotely, you must download the latest JavaScript Object Notation (JSON) sample file.

Procedure

Step 1 Go to the following URL: https://software.cisco.com/download/home/286320550.

Step 2 Choose **Headsets 500 Series**.

Step 3 Select your headset series.

Step 4 Choose a release folder and select the zip file.

Step 5 Click the **Download** or **Add to cart** button, and follow the prompts.

Step 6 Unzip the file to a directory on your PC.

What to do next

Modify the Default Headset Configuration File, on page 31

Modify the Default Headset Configuration File

Note the following as you work with the JavaScript Object Notation (JSON) file:

- The settings aren't applied if you are missing a bracket or brackets in the code. Use an online tool such as JSON Formatter and check the format.
- Set the "**updatedTime**" setting to the current epoch time or the configuration is not applied.
- Confirm that **firmwareName** is `LATEST` or the configurations will not be applied.
- Do not change a parameter name or the setting will not be applied.

Procedure

Step 1 Open the `defaultheadsetconfig.json` file with a text editor.

Step 2 Edit the **updatedTime** and the headset parameter values you wish to modify.

A sample script is shown below. This script is provided for reference only. Use it as a guide as you configure your headset parameters. Use the JSON file that was included with your firmware load.

```
{
  "headsetConfig": {
    "templateConfiguration": {
      "configTemplateVersion": "1",
      "updatedTime": 1537299896,
      "reportId": 3,
      "modelSpecificSettings": [
        {
          "modelSeries": "530",
          "models": [
            "520",
            "521",
            "522",
            "530",
            "531",
            "532"
          ],
          "modelFirmware": [
```

```
      {
        "firmwareName": "LATEST",
        "latest": true,
        "firmwareParams": [
          {
            "name": "Speaker Volume",
            "access": "Both",
            "usageId": 32,
            "value": 7
          },
          {
            "name": "Microphone Gain",
            "access": "Both",
            "usageId": 33,
            "value": 2
          },
          {
            "name": "Sidetone",
            "access": "Both",
            "usageId": 34,
            "value": 1
          },
          {
            "name": "Equalizer",
            "access": "Both",
            "usageId": 35,
            "value": 3
          }
        ]
      }
    ]
  },
  {
    "modelSeries": "560",
    "models": [
      "560",
      "561",
      "562"
    ],
    "modelFirmware": [
      {
        "firmwareName": "LATEST",
        "latest": true,
        "firmwareParams": [
          {
            "name": "Speaker Volume",
            "access": "Both",
            "usageId": 32,
            "value": 7
          },
          {
            "name": "Microphone Gain",
            "access": "Both",
            "usageId": 33,
            "value": 2
          },
          {
            "name": "Sidetone",
            "access": "Both",
            "usageId": 34,
            "value": 1
          },
          {
            "name": "Equalizer",
```

```
                "access": "Both",
                "usageId": 35,
                "value": 3
              },
              {
                "name": "Audio Bandwidth",
                "access": "Admin",
                "usageId": 36,
                "value": 0
              },
              {
                "name": "Bluetooth",
                "access": "Admin",
                "usageId": 39,
                "value": 0
              },
              {
                "name": "DECT Radio Range",
                "access": "Admin",
                "usageId": 37,
                "value": 0
              }
              {
                 "name": "Conference",
                "access": "Admin",
                "usageId": 41,
                "value": 0
            ]
          }
        ]
      }
    ]
  }
}
```

Step 3 Save the `defaultheadsetconfig.json`.

What to do next

Install the default configuration file.

Install the Default Configuration File on Cisco Unified Communications Manager

After you edit the `defaultheadsetconfig.json` file, install it on Cisco Unified Communications Manager using the TFTP File Management tool.

Procedure

Step 1 From Cisco Unified OS Administration, choose **Software Upgrades** > **TFTP File Management**.

Step 2 Select **Upload File**.

Step 3 Select **Choose File** and navigate to the `defaultheadsetconfig.json` file.

Step 4 Select **Upload File**.

Step 5 Click **Close**.

Restart the Cisco TFTP Server

After you upload the `defaultheadsetconfig.json` file to the TFTP directory, restart the Cisco TFTP server and reset the phones. After about 10–15 minutes, the download process begins and the new configurations are applied to the headsets. It takes an additional 10 to 30 minutes for the settings to be applied.

Procedure

Step 1 Log in to Cisco Unified Serviceability and choose **Tools** > **Control Center - Feature Services**.

Step 2 From the **Server** drop-down list box, choose the server on which the Cisco TFTP service is running.

Step 3 Click the radio button that corresponds to the **Cisco TFTP** service.

Step 4 Click **Restart**.

Connect a Headset to Your Phone

Each type of wired headset, adapter, or base connects to a phone using a different port and a different type of connector and cable. Common types include an RJ connector, a USB connector, and a Y-cable.

Connect a Standard Headset

You can use a standard headset with your desk phone. Standard headsets plug into the headset jack on the back of the phone with an RJ-type connecter.

Figure 13: Standard Headset Connection

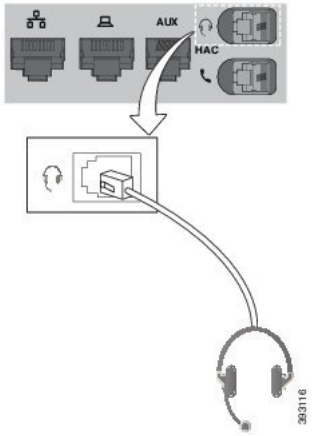

Caution Failure to press the cable into the channel in the phone can damage the printed circuit board inside the phone. The cable channel reduces the strain on the connector and the printed circuit board.

Procedure

Plug the headset into the headset jack on the back of the phone. Press the cable into the cable channel.

Connect a USB Headset

When you use USB headsets with your phone, keep in mind the following:

- You can use only one headset at a time. The most-recently connected headset is the active headset.
- If you are on an active call and unplug a USB headset, the audio path does not change automatically. Press the **Speakerphone** button or pick up the handset to change the audio.

Your phone may have more than one USB port, depending upon your model. The Cisco IP Phone 8851 and 8851NR has one USB located on the side of the phone. The Cisco IP Phone 8861, 8865, and 8865NR have two USB ports, located on the back and side of the phone.

You may have to remove the plastic cover to access the side USB ports.

Procedure

Plug the USB headset connector into the USB port on the phone.

Connect a Cisco Standard Base with the Y-Cable

You can connect the standard base to your phone with the included Y-cable. But note that the Y-cable has two RJ-type connectors - one for the auxiliary or AUX port, and one for the headset port. You can distinguish between the two connectors by their size, as the AUX port connector is slightly larger than the headset port connector.



Caution Failure to press the cable into the channel in the phone can damage the printed circuit board inside the phone. The cable channel reduces the strain on the connector and the printed circuit board.

Procedure

Step 1 Plug the smaller connector into the headset jack that is located on the back of the phone. Press the cable into the cable channel.

Step 2 Plug the larger cable into the AUX port located next to the headset port.

Connect the Multibase to a Bluetooth Device

The Cisco Headset 560 Series Multibase can connect to Bluetooth devices such as a mobile phone or tablet. The headset base appears on your call device as **Cisco Headset** followed by the last three digits on your headset serial number.

Note You can find your headset serial number in the lower right corner on the underside of your base.

The multibase can store up to four different paired Bluetooth devices. If you already have four paired devices, the base will replace the device which has not been used in the longest time.

Procedure

Step 1 Press the **Bluetooth** button on the back of the base twice to start pairing.

Step 2 Select your headset from the **Settings** menu on your device.

The Bluetooth LED lights white when pairing is successful.

Disconnect the Multibase from a Bluetooth Device

You can disconnect your Multibase from its paired Bluetooth call device.

Procedure

Step 1 Press the **Bluetooth button** on the back of the base once. The LED may take a moment to turn off.

Step 2 Press the **Bluetooth button** again to reconnect to the same call device.

Erase All Bluetooth Pairings

You can erase all saved Bluetooth device pairings.

Procedure

Press and hold the **Bluetooth** button on the back of the multibase for four seconds to clear the memory.

Postpone a Phone Upgrade

When new firmware is available, the New firmware available window is displayed on your phone and a timer begins a 30-second countdown. If you do nothing, the upgrade proceeds.

You can postpone your firmware upgrade for 2 hours and up to 3 times. The upgrade is also postponed if you make or receive a phone call.

Once the upgrade is complete, the headset restarts, and you are prompted to configure your settings.

Procedure

Select **Postpone** to postpone a firmware upgrade.

Cisco Headset Customization

Some Cisco Headset 500 Series are available with a USB adapter that allows you to customize your settings. The headset retains the settings when you switch phones.

You can customize the Cisco Headset 730 headset settings. The headset retains the settings when you switch phones. Currently, you can only customise the settings when you have the headset connected to the phone with the USB-C cable.

You can customize your headset settings if you have one of the following Cisco headsets:

- Cisco Headset 521 and 522
- Cisco Headset 531 and 532
- Cisco Headset 561 and 562
- Cisco Headset 730

Cisco Headset 500 Series Customization

Adjust Your Bass and Treble

You can adjust the bass and treble to customize the headset sound. If you like a headset with a lot of bass, then adjust toward the warm setting. If you prefer more treble, then adjust toward the bright setting.

Procedure

Step 1 Press **Applications** .

Step 2 Select **Accessories** and then your headset.

Step 3 Navigate **Setup** > **Speaker** > **Tuning**.

Step 4 Press the Navigation cluster left, or right, to adjust the tuning.

Adjust Your Speaker Sidetone

Sidetone is the term for when you hear your own voice in your headset. Some people find it distracting to hear their own voice during a call, while other people want to know that their headset is working.

Procedure

Step 1 Press **Applications** .
Step 2 Select **Accessories** and then your headset.
Step 3 Navigate **Setup** > **Speaker** > **Sidetone**.
Step 4 Press the Navigation cluster up or down to adjust the sidetone.
Step 5 Select **Set** to apply your settings.

Adjust Your Microphone Volume

Microphone volume is also known as gain, and this setting controls how loud you are to other people on the call.

Procedure

Step 1 Press **Applications** .
Step 2 Select **Accessories** and then your headset.
Step 3 Navigate **Setup** > **Microphone** > **Gain**.
Step 4 Press the Navigation cluster, left or right, to adjust the gain.

Cisco Headset 700 Series Customization

Set the Cisco Headset 730 Noise Cancellation Level

Your headset can filter out any background sounds with noise cancellation.

Procedure

Step 1 Press **Applications** .
Step 2 Select **Accessories** and then your headset.
Step 3 Navigate **Setup** > **Noise cancellation**.

Step 4 Select the desired setting and press **Set**.

Set the Cisco Headset 730 Sidetone Level

Sidetone is the term for when you hear your own voice in your headset. Some people are distracted when they hear their own voice during a call, while other people want to know that their headset is working.

Procedure

Step 1 Press **Applications** .
Step 2 Select **Accessories** and then your headset.
Step 3 Navigate **Setup** > **Sidetone**.
Step 4 Select the desired setting and press **Set**.

Set the Cisco Headset 730 General Settings

You can customize the settings on your Cisco Headset 730 through the menu on your Cisco IP Phone.

Procedure

Step 1 Press **Applications** .
Step 2 Select **Accessories** and then your headset.
Step 3 Select **Setup** > **General**.
Step 4 Configure the settings.

Parameter	Choice	Description
Auto-mute	On, Off Default: On	When Auto-mute is enabled, you can take off your headset to mute your microphone on a call. Your headset automatically unmutes when you put your headset back on.
Auto-answer call	On, Off Default: On	When Auto-answer call is enabled, you can answer an incoming call when you put your headset on your head. You can also end a call when you take your headset off.
Auto-play/pause	On, Off Default: On	When Auto-play/pause is enabled, you can automatically pause and play music playback when you take off and put on your headset.

Parameter	Choice	Description
Sync DND status	On, Off Default: Off	When **Sync DND status** is enabled you can press **Mute** to turn the Presence LED Lights on and off when you aren't on a call.

Reset the Cisco Headset 730 Settings

You can reset the headset to the factory default settings.

Procedure

Step 1 Press **Applications** .
Step 2 Select **Accessories** and then your headset.
Step 3 Select **Setup** > **Reset Settings**.
Step 4 Press **Reset** to confirm the operation.

View the Cisco Headset 730 Details

You can view information about your headset.

Procedure

Step 1 Press **Applications** .
Step 2 Select **Accessories** and then your headset.
Step 3 Press **Show details**.

Change Your Headset Ringer Settings

You can change your headset ringtone behavior on Cisco IP Phones with Phone Firmware 14.0 or later. The setting is saved on the phone and will apply to any Cisco Headset 500 Series that connects.

Procedure

Step 1 Press **Applications** .
Step 2 Select **Preferences** > **Headset ringer**.
Step 3 Select a ringer setting.

By default, your phone follows the behavior of the phone ringer settings. Select **On** if you want to always hear the phone ring when you have an incoming call. If you select **Off**, you won't hear any ring through your headset when there is an incoming call.

Step 4 Select **Set** to apply your settings.

Test Your Microphone

Check your microphone when you first install it, and before you begin a call.

Procedure

Step 1 Press **Applications** .
Step 2 Select **Accessories** and then your headset.
Step 3 Navigate to **Setup** > **Microphone** > **Test**.
Step 4 Press **Record** and speak into the microphone.
Step 5 Press **Stop rec** when you finish speaking.
Step 6 Press **Play** to review your test recording.

Update Your Cisco Headset Firmware With a Cisco IP Phone

You can update your headset software on any supported Cisco IP Phone. During a headset firmware upgrade, you can view the progress on your phone screen.

Procedure

Step 1 Connect your headset to a Cisco IP Phone.

Note You can only upgrade the Cisco Headset 730 on IP Phones through the USB cable.

Step 2 If the headset does not automatically begin to update, restart the phone. The phone downloads the latest headset version file when the phone restarts and uploads it to the headset.

Configure a Headset on the Phone

After you have connected the headset, you may have to configure it on your phone.

If you have a Cisco headset with a USB adapter, then follow the steps in Cisco Headset Customization, on page 37

Reset Cisco Headset Settings from Your Phone

You can reset your Cisco headset to remove your custom settings. This action returns the headset to the original configuration set by your administrator.

Your phone must be running Firmware Release 12.5(1)SR3 or later for this feature to function.

Before you begin

Connect your headset to the phone:

- Cisco Headset 520 Series: Connect with the USB adapter
- Cisco Headset 530 Series: Connect with the USB cable
- Cisco Headset 560 Series: Connect the standard base or multibase with the USB or Y-cable.

Procedure

Step 1 On the phone, press **Applications** .
Step 2 Select **Accessories** > **Setup** > **Reset settings**.
Step 3 At the warning window, select **Reset**.

Adjust the Headset Feedback

When you use a headset, you can hear your own voice in the earpiece, which is called headset sidetone or headset feedback. You can control the amount of headset sidetone on your phone.

Procedure

Step 1 Press **Applications** .
Step 2 Select **Settings** > **Headset sidetone**.
Step 3 Select a setting.

Turn Bluetooth On or Off

When Bluetooth is active, the Bluetooth icon appears in the phone screen header.

Procedure

Step 1 Press **Applications** .
Step 2 Select **Bluetooth**.

Step 3 Press **On** or **Off**.

Add a Bluetooth Headset

Procedure

Step 1 Make your Bluetooth headset discoverable.

Step 2 Press **Applications** .

Step 3 Select **Bluetooth** > **Add Bluetooth device**.
Your phone searches for discoverable accessories.

Step 4 Select your headset and press **Connect**.

Step 5 (Optional) If prompted, enter the PIN for your headset.

Disconnect a Bluetooth Headset

You should disconnect your Bluetooth headset before you use it with another device.

Procedure

Step 1 Press **Applications** .

Step 2 Select **Bluetooth**.

Step 3 Select a Bluetooth headset.

Step 4 Press **Disconnect**.

Remove a Bluetooth Headset

Remove your Bluetooth headset if you aren't going to use it with your phone again.

Procedure

Step 1 Press **Applications** .

Step 2 Select **Bluetooth**.

Step 3 Select a Bluetooth headset and press **Delete**.

Set Up a Wideband Standard Headset

You can use a headset that supports wideband audio. Wideband audio improves the quality of the sound you hear in the headset.

Procedure

Step 1 Press **Applications** .

Step 2 Select **Accessories** > **Analog headset** > **Setup**.

Step 3 Press **On** or **Off** to enable or disable wideband for the analog headset.

Step 4 Press **Return** .

Enable Electronic Hookswitch Control on Your Phone

If your administrator has enabled **Admin settings** on your Cisco IP Phone, you can enable or disable electronic hookswitch control to connect with a Cisco Headset 560 Series base. Electronic hookswitch control is enabled by default.

Note This feature is available on Cisco IP Phone Firmware Release 12.7(1) and later.

Procedure

Step 1 On your phone, press **Applications** .

Step 2 Navigate **Admin settings** > **Aux port**.

Step 3 Select **Connect e-hook headset** to enable electronic hookswitch control.

Make a Call with a Standard Headset

Use your headset for hands-free calling that won't disturb your coworker and gives you some privacy.

Procedure

Step 1 Plug in a headset.

Step 2 Enter a number using the keypad.

Step 3 Press **Headset** .

Audio Path Selection

When you make or receive a call, the audio path goes to the last device used by you, either the handset, the headset, or the speakerphone. The following list describes each scenario:

- Pick up the handset when you make or answer a call, and all of your calls are routed to your handset until you select **Headset** or **Speakerphone** .
- Select **Headset** when you make or answer a call, and all of your calls are routed to your headset until you pick up the handset or select **Speakerphone** .

  If your administrator sets your headset as the audio path on your phone, then you can remove the handset and use your headset. This is ideal for anyone who prefers the convenience of a headset. But you must still select **Headset** the first time you handle a call.
- Select **Speakerphone** when you make or answer a call, and all of your calls are routed to your speakerphone until you pick up the handset or select **Headset** .

Swap Headsets While on a Call

When you connect multiple headsets to the phone, you can switch among the headsets during a call by pressing the **Headset** key on the phone. Though the phone is connected to multiple devices, you see a specific headset is selected as the preferred audio device in the following priority order:

- When you connect only an analog headset to the phone, you make your analog headset the preferred audio device.

Procedure

Step 1 Before you make or answer a call, press **Headset**.

Step 2 (Optional) If you place a call, dial the number.

Troubleshoot Your Cisco Headset

Try the following basic troubleshooting steps if you have trouble with your Cisco headset.

- Restart your headset.
- Make sure that all cords are properly plugged in and functioning properly.
- Test a different headset with your device to determine if the problem is with your wireless headset or your device.
- Make sure that your phone firmware is the latest release.

Confirm that Your Headset Is Registered

Procedure

Check to see if your headset is registered with the phone.

Step 1 Press **Applications**

Step 2 Navigate to **Accessories**. Select **Show detail**.

No Sound in Headset

Problem

There is little or no sound coming through the headset.

Solution

Check the volume level on your headset by pressing the volume controls to adjust the sound level. If the problem continues, use the following work flow to troubleshoot your problem.

Figure 14: No Audio Workflow

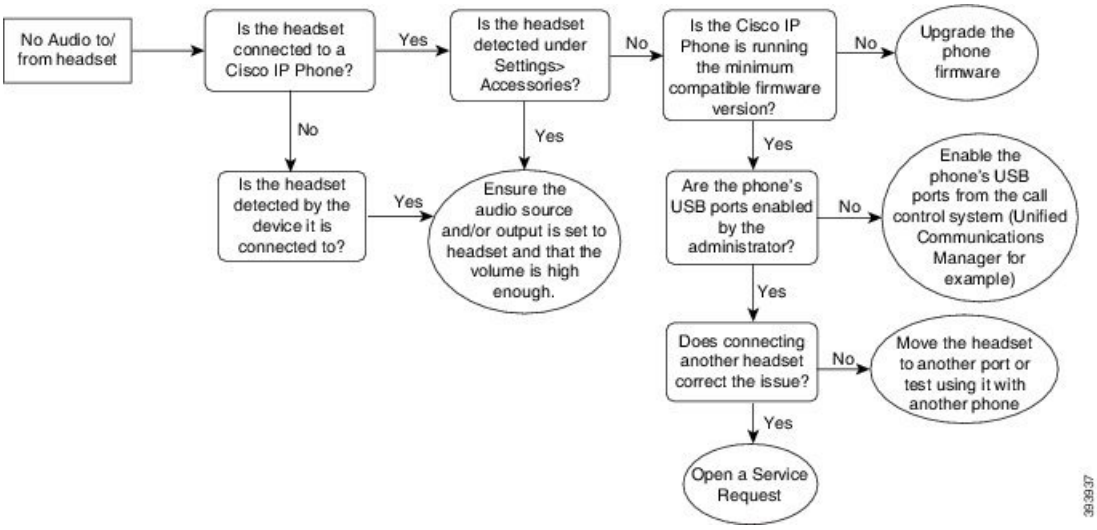

Poor Audio

Problem

Your headset is functioning, but the audio quality is poor.

Solution

Use the following work flow to troubleshoot your problem.

Figure 15: Poor Audio

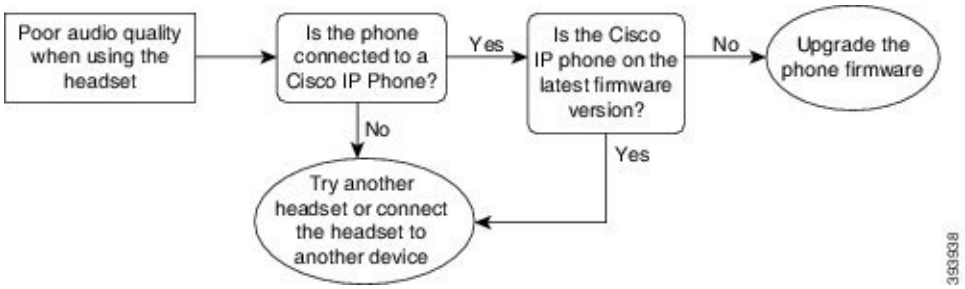

Microphone Not Picking up Sound

Problem

You cannot be heard when using your headset.

Solutions

- Check to make sure your microphone is not muted. Press the mute button on your headset to mute and unmute your microphone.
- Make sure that the microphone boom has been lowered. For optimal sound, keep the headset microphone no further than 1 in or 2.5 cm from your face.
- Make sure that your headset is properly plugged into your device.
- For the Cisco Headset 560 Series, check that you are not taking your headset too far from the headset base. The headset has an effective range of approximately 100 feet or 30 meters.

Headset Not Charging

Problem

Your Cisco Headset 561 and 562 is not charging when placed on the base.

Solution

- Check that your base is plugged into a reliable power source.
- Make sure that your headset is properly seated on the base. When the headset is properly seated, the LED shows solid white. When charging, the LEDs on the base light up in sequence from left to right. When the headset is fully charged, all five battery indicator LEDs show solid white.

Figure 16: Cisco Headset 561 and 562 Headset Placement

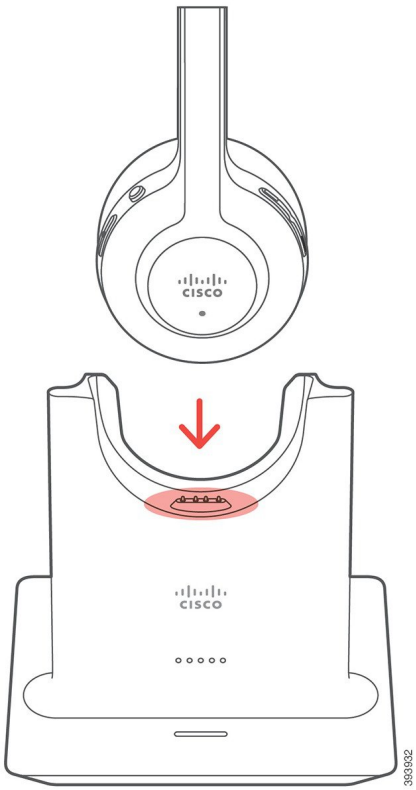

Headset Battery Not Holding a Charge

Problem

The wireless headset is not holding a full charge.

Solution

Your Cisco Headset 561 and 562 holds a charge for up to 8 hours of continuous use. If your headset battery seems weak or defective, contact Cisco support.

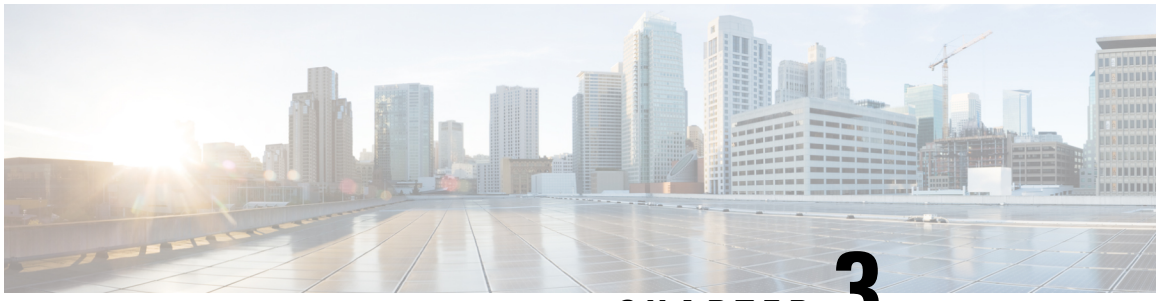

CHAPTER 3

Key Expansion Modules

- Cisco IP Phone Key Expansion Module Setup Overview, on page 49
- Key Expansion Module Buttons, on page 52
- Column Mode for the Cisco IP Phone 8800 Key Expansion Module, on page 53
- Key Expansion Module Configuration on Cisco Unified Communications Manager, on page 55
- Connect a Key Expansion Module to a Cisco IP Phone, on page 56
- Configure a Key Expansion Module on the Phone, on page 60
- Place a Call on the Key Expansion Module, on page 61
- Troubleshoot the Key Expansion Module, on page 61
- Access Key Expansion Module Setup, on page 62
- Reset the Single LCD Screen Key Expansion Module, on page 62
- Reset the Dual LCD Screen Key Expansion Module, on page 63
- Key Expansion Module Power Information, on page 63

Cisco IP Phone Key Expansion Module Setup Overview

Key expansion modules add extra line appearances, speed dials, or programmable buttons to the phone. The programmable buttons can be set up as phone line buttons, speed-dial buttons, or phone feature buttons. But Simplified dialing is not supported on expansion modules.



Caution The slots in the side of the phone are designed only for use with the spine connectors on the key expansion module. Insertion of other objects permanently damages the phone.

There are 3 expansion modules available:

- Cisco IP Phone 8800 Key Expansion Module—Single LCD screen module, 18 line keys, 2 pages, configure with one or two column displays.
- Cisco IP Phone 8851/8861 Key Expansion Module—Dual LCD screen module for audio phones, 14 line keys, 2 pages, configure with one-column display only. If you use Enhanced line mode, and you receive a call on a key expansion line, then a Call Alert displays on the phone, and the Caller ID displays on the expansion module line.
- Cisco IP Phone 8865 Key Expansion Module—Dual LCD screen module for video phones, 14 line keys, 2 pages, configure with one-column display only. If you receive a call on a key expansion line, then a Call Alert displays on the phone, and the Caller ID displays on the expansion module line.

The Cisco IP Phone 8851/8861 Key Expansion Module and the Cisco IP Phone 8865 Key Expansion Module require firmware release 12.0(1) or later, and Cisco Unified Communications Manager 10.5(2) or later to function. Enhanced line mode (ELM) is supported only on the Cisco IP Phone 8851/8861 Key Expansion Module and the Cisco IP Phone 8865 Key Expansion Module. ELM is not supported on the single LCD expansion modules.

You can use more than one expansion module per phone. The Cisco IP Phone 8851 and 8851NR support up to 2 modules. The Cisco IP Phone 8861, 8865, and 8865NR support up to 3 modules. But each module must be the same type. This means that you cannot mix audio expansion modules with video expansion modules. You also cannot use a video expansion module on an audio phone or an audio expansion module on a video phone.

Most calling features are supported on your expansion module, and they are configured by your administrator from the Cisco Unified Communications Manager. If a feature is available on the Self Care Portal, then you can add the feature to your expansion module.

When adding features to your expansion module, remember that each line button supports only one feature. You cannot add more features than the number of programmable line keys on your expansion module.

Also note the line mode when working with a key expansion module. In Session line mode, the first line key on the expansion module is line 6 of the phone template. In Enhanced line mode, it is line 11 of the phone template. Only the first 25 characters are displayed on a line.

Table 20: Available Line Keys in Each Session Mode

Cisco IP Phone Model	Single LCD screen expansion module	Dual LCD screen expansion module
Cisco IP Phone 8851 and 8851NR	Session Line Mode: 77	Session Line Mode: 61
	Enhanced Line Mode: Not supported	Enhanced Line Mode: 66
Cisco IP Phone 8861 Cisco IP Phone 8865 and 8865NR	Session Line Mode: 113	Session Line Mode: 89
	Enhanced Line Mode: Not supported	Enhanced Line Mode: 94

Figure 17: Cisco IP Phone 8865 with Three Cisco IP Phone 8865 Key Expansion Modules



Figure 18: Cisco IP Phone 8861 with Three Cisco IP Phone 8800 Key Expansion Modules



Related Topics

Accessory Support, on page 1

Key Expansion Module Buttons

The following figure and table describes the function and appearance of the buttons on the key expansion module.

Figure 19: Key Expansion Module Buttons

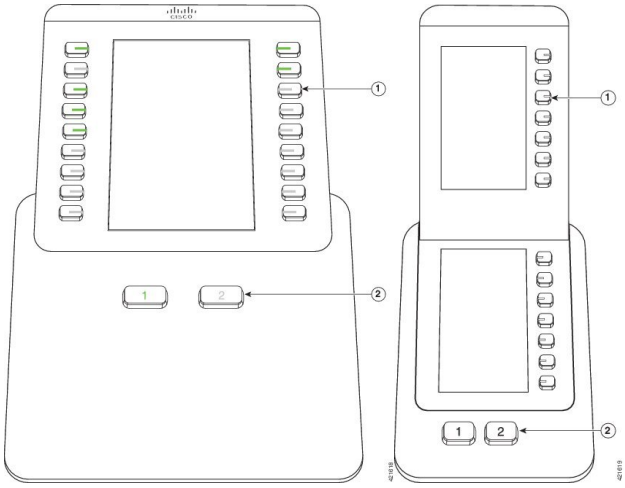

Table 21: Placement and Function of Key Expansion Module Buttons

	LCD screen—Displays the phone number, speed-dial number (or name or other text label), phone service, phone feature, or privacy assigned to each button. Icons that indicate line status resemble (in both appearance and function) the icons on the phone to which the key expansion module is attached.
1	Lighted buttons—Line buttons. Each button or pair of buttons corresponds to one line. The lights beneath each button indicate the state of the corresponding line as follows: • Light off—Line available or a call is ringing on an inactive page. • Green steady—Line in use by you, or you have a call on hold. • Green, flashing—Enhanced line mode only. You have a call on hold. • Red steady—Line in use by someone else or someone else has a call on hold on a shared line. • Red, flashing—Enhanced line mode only. Someone else has a call on hold on a shared line. • Amber steady—Line ringing. • Amber, flashing—Enhanced line mode only. Line ringing.

2	Page buttons—2 buttons. The button for page 1 is labeled as **1** and the button for page 2 is labeled as **2**. The lights in each button indicate the state of the page as follows: •  Green steady—Page is in view. •  Light off—Page is not in view. •  Amber steady—Page is not in view with one or more alerting calls on the page.

Column Mode for the Cisco IP Phone 8800 Key Expansion Module

If you are using the Cisco IP Phone 8800 Key Expansion Module, you can set it up in one-column mode or two-column mode. Set your mode from the Product Specific Configuration area of your Cisco Unified Communications Manager Administration. Two-column mode is the default on the Cisco IP Phone 8800 Key Expansion Module.

The Cisco IP Phone 8851/8861 Key Expansion Module and the Cisco IP Phone 8865 Key Expansion Module do not support two-column mode.

Note If the label is longer than the display space in both one- and two-column mode, the text contains an ellipsis (…).

One-Column Mode

In one-column mode, each row in the display corresponds to one line accessed by either the left or right-side buttons. In this configuration, the key expansion module displays 9 lines on page 1, and 9 lines on page 2.

Figure 20: A Cisco IP Phone 8800 Key Expansion Module in One Column Mode



Two-Column Mode

In two-column mode, each of the buttons on the left and right of the screen is assigned to different lines. In this configuration, the key expansion module displays 18 lines on page 1, and 18 lines on page 2.

Figure 21: A Cisco IP Phone 8800 Key Expansion Module in Two Column Mode



Key Expansion Module Configuration on Cisco Unified Communications Manager

Key expansion modules are supported by most versions of Cisco Unified Communications Manager.

Set up the Key Expansion Module in Cisco Unified Communications Manager

Expansion modules are enabled from the Expansion Module Information area of the Phone Configuration page on Cisco Unified Communications Manager. If you configure the expansion module incorrectly, an error message displays on the phone. You cannot configure the phone for a dual LCD module and then install a single LCD module. But your choice of expansion module is not permanent. You can configure another module if your needs change.

Before you begin

As a best practice, enable power negotiation on both the switch and the phone. This ensures that the expansion module powers up.

Procedure

Step 1 In Cisco Unified Communications Manager Administration, choose **Device** > **Phone**.

The Find and List Phones window appears. You can search for one or more phones that you want to configure for the Cisco IP Phone 8800 Key Expansion Module.

Step 2 Select and enter your search criteria and click **Find**.

The Find and List Phones window appears with a list of phones that match your search criteria.

Step 3 Click the phone that you want to configure for the Cisco IP Phone 8800 Key Expansion Module. The Phone Configuration window appears.

Step 4 If you have an expansion module with a single LCD screen, scroll down to the Product Specific Configuration area. Enable the One Column Display for KEM field for one-column mode, or disable the field for two-column mode.

Step 5 Scroll down to the Expansion Module Information section. Select the appropriate expansion module for the Module 1 field.

Depending upon your phone, your choices may include:

- CP-8800-Video 28 Button Key Expansion Module
- CP-8800-Audio 28 Button Key Expansion Module
- BEKEM 36-Button Line Expansion Module

Step 6 (Optional) Depending upon your phone model, you can add extra expansion modules. Repeat the previous step for Module 2, and Module 3.

Step 7 Click **Save**.

Step 8 Select **Apply Config**.

Step 9 Restart the phone.

Custom Background Images

You can customize a Cisco IP phone with a background image or wallpaper. Customized wallpapers are a popular way to display corporate logos or images and many organizations use them to make their phones stand out.

The phone analyzes the color of your wallpaper and changes the color of your font and icons so they can be read. If your wallpaper is dark, the phone changes the fonts and icons to white. If your wallpaper is light, the phone displays the fonts and icons as black.

But it is best to choose a simple image such as a solid color or pattern for your background. Also you should avoid high contrast images.

You add customized wallpaper in one of two ways:

- Using the List file
- Using a Common Phone Profile

If you want the user to be able to select your image from various wallpapers available on the phone, then modify the List file. But if you want to push the image to the phone, then create or modify an existing Common Phone Profile.

Regardless of your approach, note the following:

- Your images must be in PNG format and the dimensions of the full sized image must be within 800 pixels by 480 pixels. Thumbnail images are 139 pixels (width) by 109 pixels (height).
- Upload the images and List file to your TFTP server. The directory is Desktops/800x400. Restart the server after the upload is done.
- If you modify your Common Phone Profile, then add the new image to the Background Image field in the format mylogo.png. If you don't want the user selecting their own wallpaper, then uncheck **Enable End User Access to Phone Background Image Setting**. Save and apply the phone profile. Restart the phones so your changes take effect.

For more information on customizing wallpaper, refer to the following documentation:

- *Customized Wallpapers Best Practices Cisco IP Phone 8800 Series* (https://www.cisco.com/c/dam/en/us/products/collateral/collaboration-endpoints/unified-ip-phone-8800-series/white-paper-c11-740036.pdf).
- "Custom Phone Rings and Backgrounds" chapter, Feature Configuration Guide for Cisco Unified Communications Manager for Cisco Unified Communications Manager release 12.0(1) or later.
- “Settings” chapter in the *Cisco IP Phone 8800 Series User Guide*.

Connect a Key Expansion Module to a Cisco IP Phone

If you want to install more than one key expansion module, you repeat steps 7-9 to connect the other key expansion modules together.

Procedure

Step 1 Unplug the Ethernet cable from the phone.

Step 2 If installed, remove the footstand from the phone.

Step 3 Locate the accessory connector covers on the side of the phone.

This diagram shows the location.

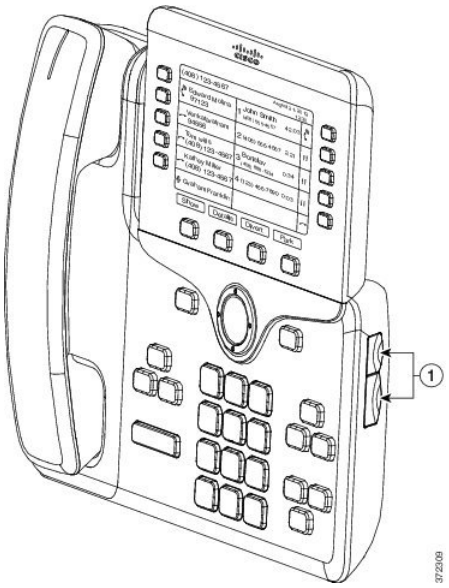

Step 4 Remove the two accessory connector covers, as shown in the diagram.

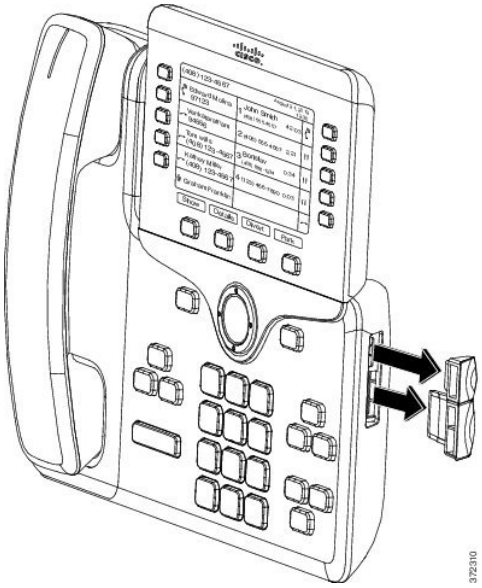

Caution The slots are designed for the spine connector only. Insertion of other objects will cause permanent damage to the phone.

Step 5 Position the phone so that the front of the phone faces up.

Step 6 Connect one end of the key expansion module spine connector to the accessory connector on the Cisco IP Phone.

a) Align the spine connector with the accessory connector ports.

Note Install the connector in the orientation shown in the following diagrams.

b) Firmly press the spine connector into the phone.

This diagram shows the spine connector.

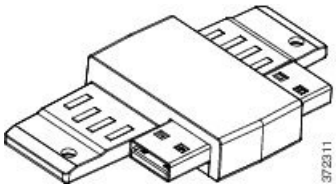

This diagram shows the installation of the spine connector.

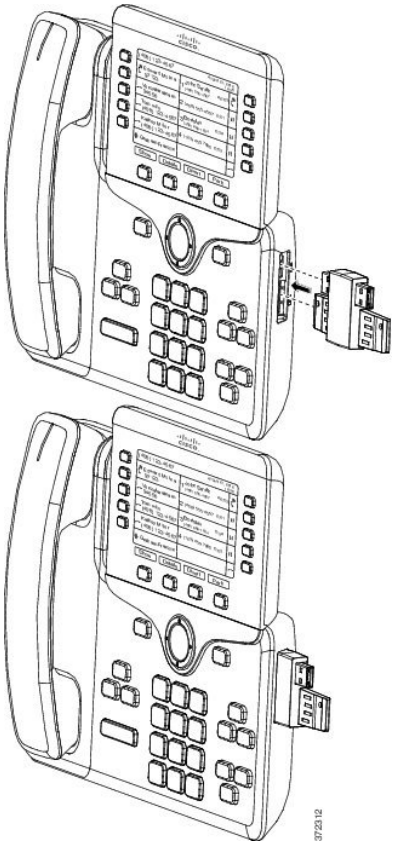

Step 7 Connect the other end of the spine connector to the key expansion module as shown in this diagram.

a) Align the spine connector with the key expansion module accessory connector ports.

b) Firmly press the key expansion module into the spine connector.

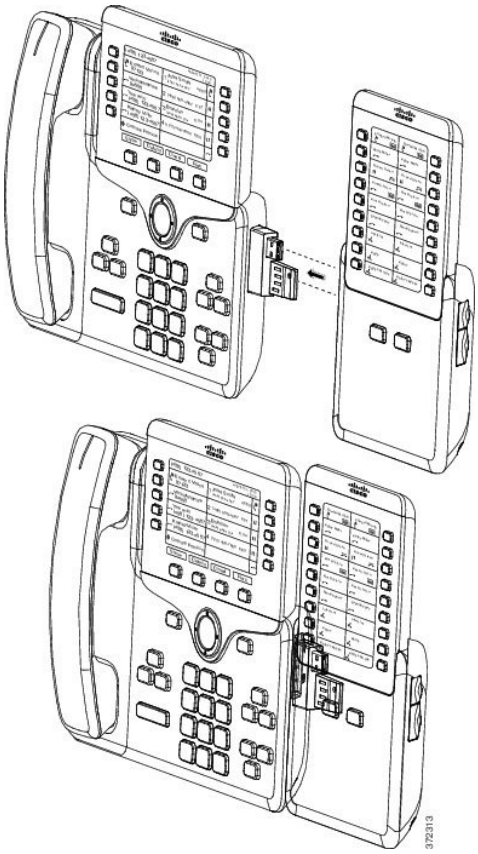

Step 8 (Optional) Use a second key expansion module spine connector to connect the second key expansion module to the first key expansion module.

Step 9 (Optional) Use a third key expansion module spine connector to connect the third key expansion module to the second key expansion module.

Step 10 Use a screwdriver to fasten the screws into the phone.

This step ensures that the phone and key expansion module remain connected at all times. This diagram shows the location of the screw holes on the phone and one key expansion module.

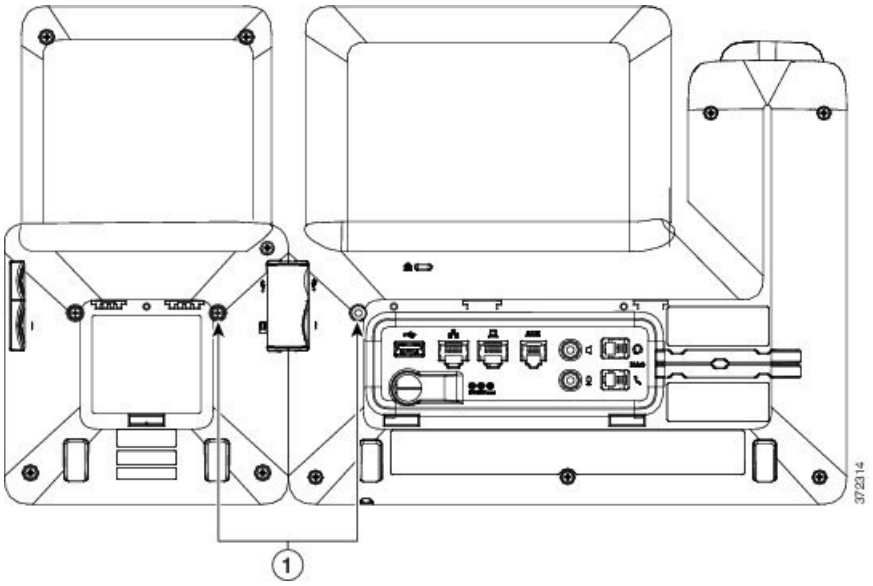

Note Make sure that the screws are fully inserted into the phone and tightened.

If you lose any screws, the phone uses a standard M3 0.5x5.0mm screw.

Step 11 (Optional) Install the footstands on the phone and on the key expansion module, and adjust both footstands to rest evenly on the work surface.

Step 12 Plug the Ethernet cable into the phone.

Configure a Key Expansion Module on the Phone

After your administrator has configured your key expansion module, you can set it up and customize it from your phone.

Change the Wallpaper

Your administrator may allow you to change the wallpaper or background image.

Procedure

Step 1 Press **Applications** .

Step 2 Navigate **Settings** > **Wallpaper**.

Step 3 Select a wallpaper option and perform any of the steps:

- Press **Preview** to see the wallpaper on your phone screen.
- Press **Set** to apply the wallpaper to the phone.

Step 4 Press **Exit**.

Adjust the Key Expansion Module Screen Brightness

Procedure

Step 1 Press **Applications** .

Step 2 Select **Settings** > **Brightness** > **Brightness - Key expansion module x**, where x is the number of the key expansion module.

Step 3 Press right on the Navigation pad to increase brightness. Press left on the Navigation pad to decrease brightness.

Step 4 Press **Save**.

Place a Call on the Key Expansion Module

Procedure

Step 1 Press the line button on the key expansion module.

Step 2 Dial a phone number.

Step 3 Pick up your handset.

Troubleshoot the Key Expansion Module

Procedure

Step 1 Open a CLI.

Step 2 Enter the following command to enter debug mode:

```
debugsh
```

Step 3 Enter **?** to see all available commands and options.

Step 4 Use the applicable commands and options to find the desired information.

Step 5 To exit debug mode, press **Ctrl-C**.

Access Key Expansion Module Setup

After you install one or more key expansion modules on the phone and configure them in Cisco Unified Communications Manager Administration, the phone automatically recognizes the key expansion modules.

When multiple key expansion modules are attached, they are numbered according to the order in which they connect to the phone:

- Key expansion module 1 is the expansion module closest to the phone.
- Key expansion module 2 is the expansion module in the middle.
- Key expansion module 3 is the expansion module farthest to the right.

You can select a key expansion module, and then choose one of the following softkeys:

- Exit: Returns to the Applications menu.
- Details: Provides details about the selected key expansion module.
- Setup: Allows you to configure the brightness of the selected key expansion module. Setting the brightness can also be done using the Preferences menu on the phone.

Procedure

Step 1 On the phone, press **Applications** .

Step 2 Press **Accessories**.

All properly installed and configured key expansion modules display in the list of accessories.

Reset the Single LCD Screen Key Expansion Module

If you are having technical difficulties with your Cisco IP Phone 8800 Key Expansion Module, you can reset the module to the factory default settings.

Procedure

Step 1 Restart the key expansion module by disconnecting the power source, waiting a few seconds, and then reconnecting it.

Step 2 As the key expansion module powers up, press and hold **Page 1**. As the LCD screen turns white, continue pressing **Page 1** for at least one second.

Step 3 Release **Page 1**. The LEDs turn red.

Step 4 Immediately press **Page 2** and continue pressing **Page 2** for at least one second.

Step 5 Release **Page 2**. The LEDs turn amber.

Step 6 Press Lines **5**, **14**, **1**, **18**, **10**, and **9** in sequence.

The LCD screen turns blue. A spinning icon is displayed in the center of the screen.

The key expansion module resets.

Reset the Dual LCD Screen Key Expansion Module

If you are having technical difficulties with your dual LCD screen key expansion module, you can reset the module to the factory default settings. This task applies only to the Cisco IP Phone 8865 Key Expansion Module and the Cisco IP Phone 8851/8861 Key Expansion Module.

Procedure

Step 1 Restart the module by disconnecting it and then reconnecting it to the phone.

Step 2 As the module powers up, hold down both of the page keys until the LEDs on the first 7 line keys turn green.

Key Expansion Module Power Information

If you use a key expansion module with your phone, then Power over Ethernet (PoE) is often enough to power your expansion modules. But a power cube is required for a Cisco IP Phone 8851/8861 Key Expansion Module or a Cisco IP Phone 8865 Key Expansion Module supported by 802.3af PoE. A power cube is also needed for smartphone or tablet charging when your expansion module is attached.

Cisco IP Phone 8800 Key Expansion Module Power Consumption

48V DC, 5W per key expansion module

Cisco IP Phone 8851/8861 Key Expansion Module and Cisco IP Phone 8865 Key Expansion Module Power Consumption

48V DC, 3.5W per key expansion module

Cisco IP Phone 8800 Key Expansion Module, Cisco IP Phone 8851/8861 Key Expansion Module, and Cisco IP Phone 8865 Key Expansion Module Power Scheme

The phone can power one key expansion module directly. For more information, see the Power-Supply Compatibility Table.

If you are charging a smartphone or a tablet, the side USB draws up to 500mA/2.5W.

Table 22: Power-Supply Compatibility Table

Configuration	802.3af Power over Ethernet (PoE)	802.3at PoE	Cisco IP Phone Power Cube 4
8851 and 1 expansion module	Yes	Yes	Yes

Configuration	802.3af Power over Ethernet (PoE)	802.3at PoE	Cisco IP Phone Power Cube 4
8851 and 2 expansion modules	No	No See the third note.	Yes
8861 and 1 expansion module	No	Yes	Yes
8861 and 2 expansion modules	No	Yes See the first note.	Yes
8861 and 3 expansion modules	No	Yes See the first note.	Yes
8865 and 1 expansion module	No	Yes	Yes
8865 and 2 expansion modules	No	Yes See the second note.	Yes
8865 and 3 expansion modules	No	Yes See the second note.	Yes

Note Be familiar with the following items:

- Cisco IP Phone 8861 using 802.3at PoE: The fast-charging feature on the back USB is not supported when more than one expansion module is used.
- Cisco IP Phone 8865: The fast-charging feature on the back USB requires Cisco Universal PoE (UPoE) when more than one expansion module is attached.
- Cisco IP Phone 8851 with 2 expansion modules: 802.3at PoE is supported only with v08 or later hardware. You can find the phone version information on the lower back of the phone as part of the TAN and PID label. Version information is also located on the individual phone packaging.

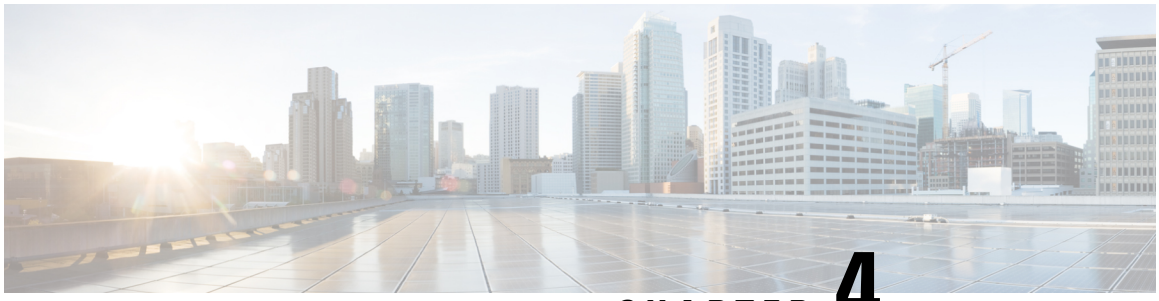

CHAPTER 4

Wall Mount Kits

- Wall Mount Kits, on page 65
- Wall Mount Components, on page 66
- Install a Spare Wall Mount Kit, on page 71
- Remove the Phone from the Wall Mount Kit, on page 78
- Adjust the Handset Rest on Your Phone, on page 79

Wall Mount Kits

Each wall mount is unique to your phone model and cannot be used for another phone. If you are planning to attach your phone to a wall, purchase the wall mount kit specific to your phone.

For part numbers and other additional information, refer to the phone model data sheet. The Cisco IP Phone 8800 Series data sheets can be found here https://www.cisco.com/c/en/us/products/collaboration-endpoints/unified-ip-phone-8800-series/datasheet-listing.html. The Cisco IP Phone 7800 Series data sheets can be found here https://www.cisco.com/c/en/us/products/collaboration-endpoints/unified-ip-phone-7800-series/datasheet-listing.html.

To check which phone model you have, press **Applications** and select **Phone information**. The **Model number** field shows your phone model.

Table 23: Wall Mount Kits

Cisco IP Phone	Cisco Wall Mount Kit	Notes
Cisco IP Phone 7811	Spare Wallmount Kit for Cisco IP Phone 7811 (CP-7811-WMK=)	
Cisco IP Phone 7821 and 7841	Spare Wallmount Kit for Cisco IP Phone 7800 Series (CP-7800-WMK=)	
Cisco IP Phone 7861	Spare Wallmount Kit for Cisco IP Phone 7861 (CP-7861-WMK=)	
Cisco IP Phone 8811 and 8841	Spare Wallmount Kit for Cisco IP Phone 8800 Series (CP-8800-WMK)	

Cisco IP Phone	Cisco Wall Mount Kit	Notes
Cisco IP Phone 8851, 8851NR, and 8861	Spare Wallmount Kit for Cisco IP Phone 8800 Series (CP-8800-WMK)	This wall mount kit cannot be used with a key expansion module.
	Spare Wallmount Kit for Cisco IP Phone 8800 Series with Single 28-key Key Expansion Module (lockable) (CP-8800-A-KEM-WMK)	This wall mount kit is available for Cisco IP Phone 8851, 8851NR, and 8861 that with a key expansion module. It is lockable.
Cisco IP Phone 8845, 8865, and 8865NR	Spare Wallmount Kit for Cisco IP Phone 8800 Video Series (CP-8800-VIDEO-WMK=)	This wall mount kit is available for Cisco IP Phone 8845, 8865, and 8865NR only. It can be locked, but it cannot be used with a key expansion module.

Related Topics

Accessory Support, on page 1

Wall Mount Components

You can attach a wall mount kit to most surfaces, including concrete, brick, or other hard surfaces. But the items in your wall mount kit are for drywall use only. If you mount your phone on other surfaces, obtain the appropriate screws and anchors.

Check and see that you have the correct components before you install your kit. For each phone model, use the table and diagram to check the contents of your wall mount kit.

Spare Wall Mount Kit for Cisco IP Phone 7811

Item	Component
A	4 M4 x 25-mm Phillips-head screws
B	4 anchors
C	2 M3 x 7-mm self-tapping screws
D	1 wall bracket
E	1 phone bracket
F	One 200-mm Ethernet cable

Figure 22: Components of Spare Wall Mount Kit for Cisco IP Phone 7811

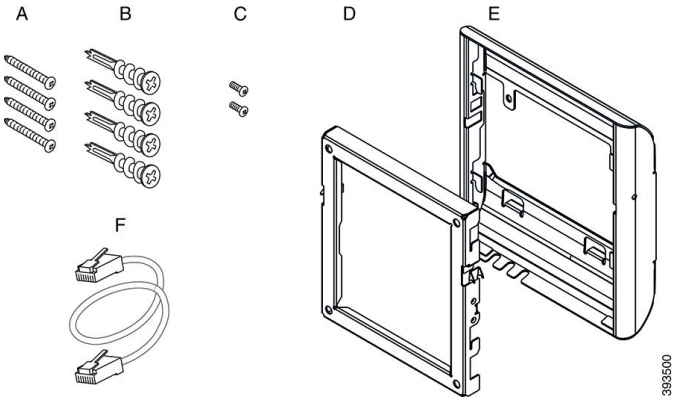

Spare Wall Mount Kit for Cisco IP Phone 7800 Series

Item	Component
A	4 M8-18 x 1.25-inch Phillips-head screws
B	4 anchors
C	2 M2.5 x 6-mm machine screws
D	1 phone bracket
E	1 wall bracket
F	One 6-inch Ethernet cable

Figure 23: Components of Spare Wall Mount Kit for Cisco IP Phone 7800 Series

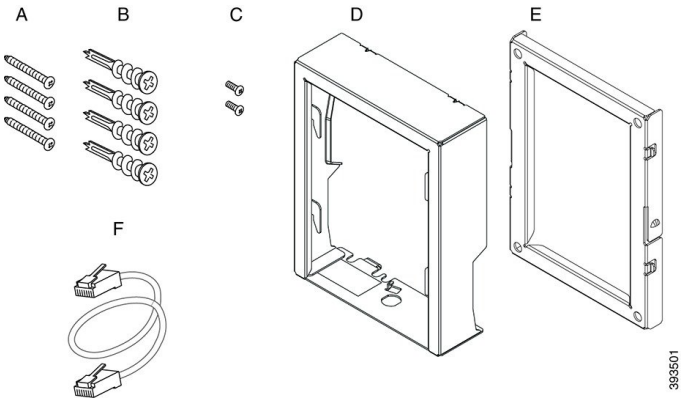

Spare Wall Mount Kit for Cisco IP Phone 7861

Item	Component
A	4 M4 x 25-mm Phillips-head screws

Item	Component
B	4 anchors
C	2 M3 x 7-mm self-tapping screws
D	1 phone bracket
E	1 wall bracket
F	One 200-mm Ethernet cable

Figure 24: Components of Spare Wall Mount Kit for Cisco IP Phone 7861

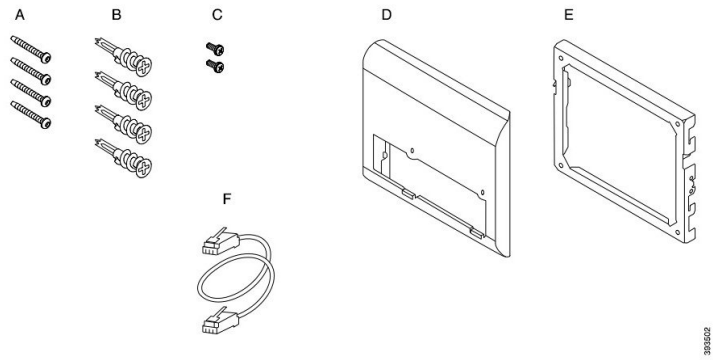

Spare Wall Mount Kit for Cisco IP Phone 8800 Series

Item	Component
A	4 #8-18 x 1.25-inch Phillips-head screws
B	4 anchors
C	2 K30x8mm self-tapping screws
D	1 phone bracket
E	1 wall bracket
F	One 6-inch Ethernet cable

Figure 25: Components of Spare Wall Mount Kit for Cisco IP Phone 8800 Series

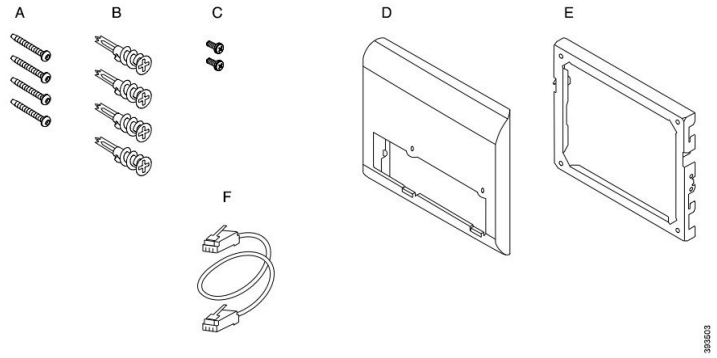

Spare Wall Mount Kit for Cisco IP Phone 8800 Series with Single 28-key Key Expansion Module (Lockable)

Item	Component
A	6 #8-18 x 1.25-inch Phillips-head screws
B	6 anchors
C	3 K30x8mm self-tapping screws
D	1 phone bracket
E	1 wall bracket
F	One 6-inch Ethernet cable
G	1 key if the bracket includes the optional lock

Figure 26: Components of Spare Wall Mount Kit for Cisco IP Phone 8800 Series with Single 28-key Key Expansion Module (Lockable)

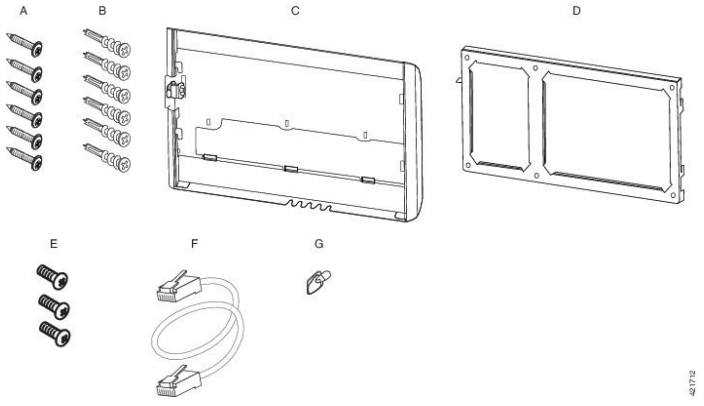

Spare Wall Mount Kit for Cisco IP Phone 8800 Series with Single 36-key Key Expansion Module

Item	Component
A	6 #8-18 x 1.25-inch Phillips-head screws

Item	Component
B	6 anchors
C	3 K30x8mm self-tapping screws
D	1 phone bracket
E	1 wall bracket
F	One 6-inch Ethernet cable

Figure 27: Components of Spare Wall Mount Kit for Cisco IP Phone 8800 Series with Single 36-key Key Expansion Module

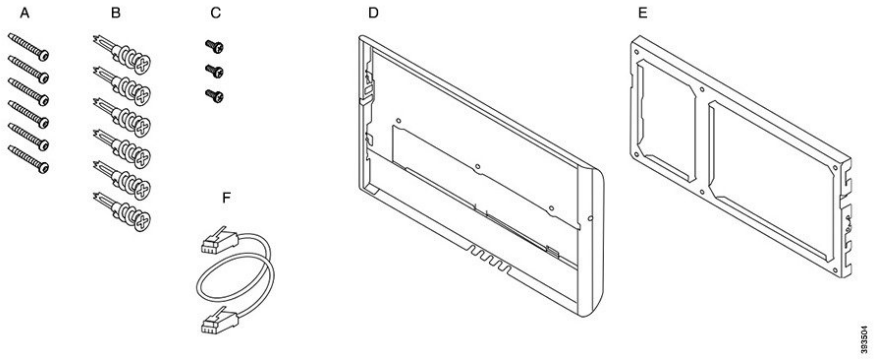

Spare Wall Mount Kit for Cisco IP Phone 8800 Video Series

Item	Component
A	4 #10-12x1-inch Phillips-head screws with
B	4 anchors
C	2 #4-40x1/4-inch machine screws
D	1 phone bracket
E	1 wall bracket
F	One 6-inch Ethernet cable
G	1 key if the bracket includes the optional lock
H	1 sheet metal screw (not shown)

Figure 28: Components of Spare Wall Mount Kit for Cisco IP Phone 8800 Video Series

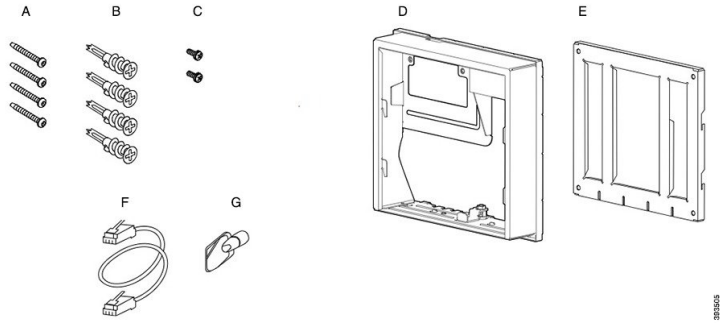

Install a Spare Wall Mount Kit

Make sure that a working Ethernet connection is available nearby before you install your wall mount kit. If the phone covers the connector, the connector must be flush or recessed to the wall.

Complete your installation in the following order:

- Attach the wall bracket to the wall
- Attach the phone bracket to the phone
- Attach the cables to the phone
- Attach the phone to the wall bracket

Attach the Wall Bracket to the Wall

Each wall mount kit is slightly different, so refer to the appropriate example when attaching the bracket to the wall.

Before you begin

Obtain one of each of the following:

- #2 Phillips-head screwdriver
- Level
- Pencil

Procedure

Step 1 Hold the bracket against the wall, with the arrow pointing up.

Step 2 Use the level to ensure that the bracket is level.

Step 3 Use a pencil to mark the screw holes.

Step 4 Center the anchor over the pencil mark and use a #2 Phillips-head screwdriver to press the anchor into the wall. Screw the anchor clockwise into the wall until it is seated flush.

Step 5 Use the included screws and the #2 Phillips-head screwdriver to attach the bracket to the wall through the anchors.

Examples of a Wall Bracket Attached to a Wall

The following diagram illustrates attaching a Cisco IP Phone 7800 and 8800 series wall bracket to a wall.

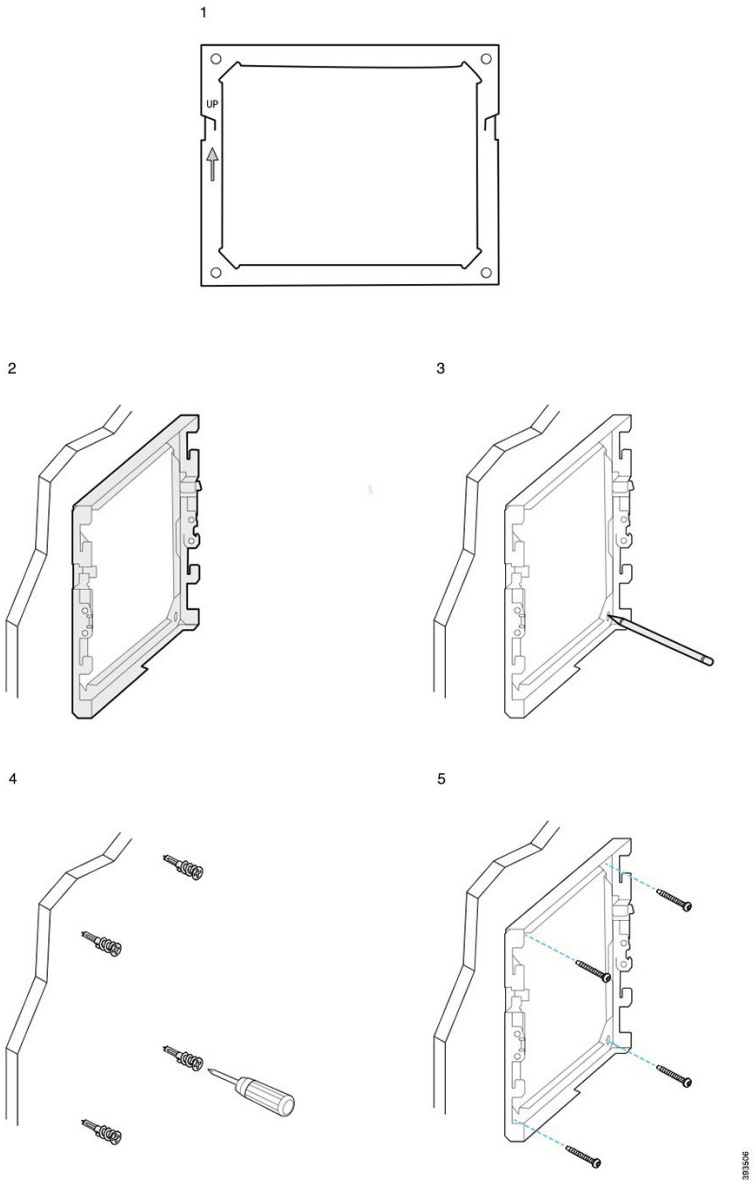

The following diagram illustrates attaching a Cisco IP Phone 8800 series wall bracket with a key expansion module to a wall.

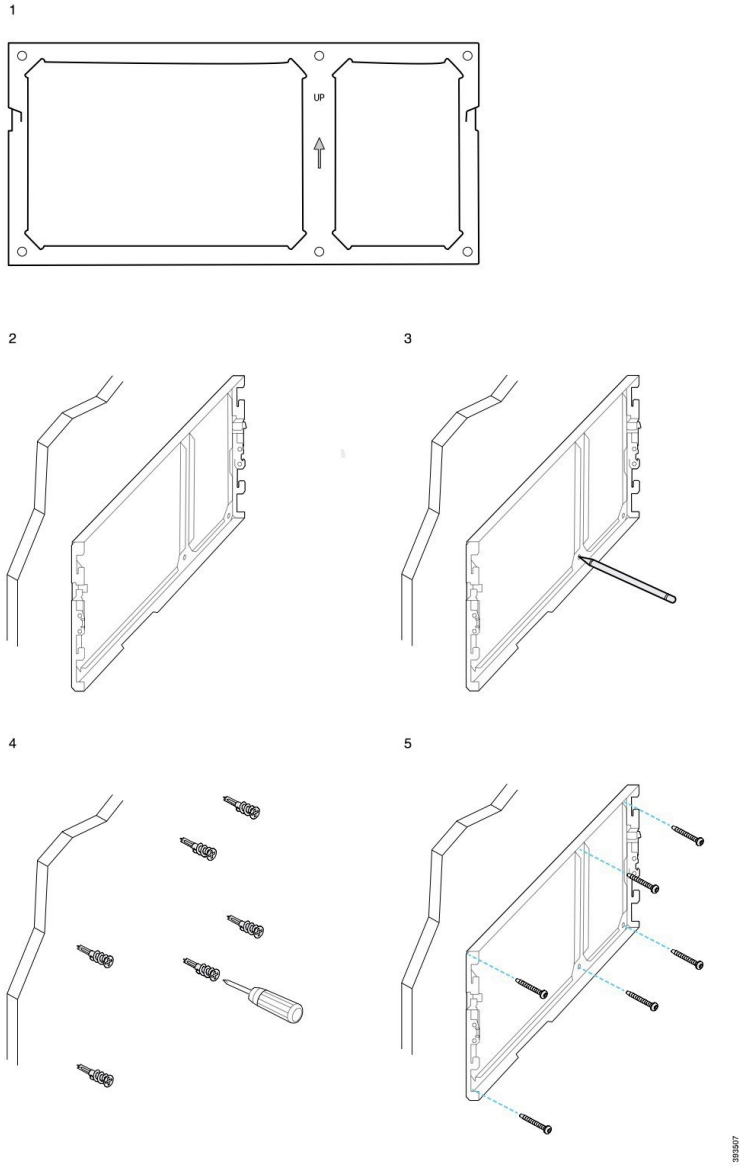

The following diagram illustrates step 2 to step 5 of attaching a Cisco IP Phone 8845 and 8865 series wall bracket to a wall.

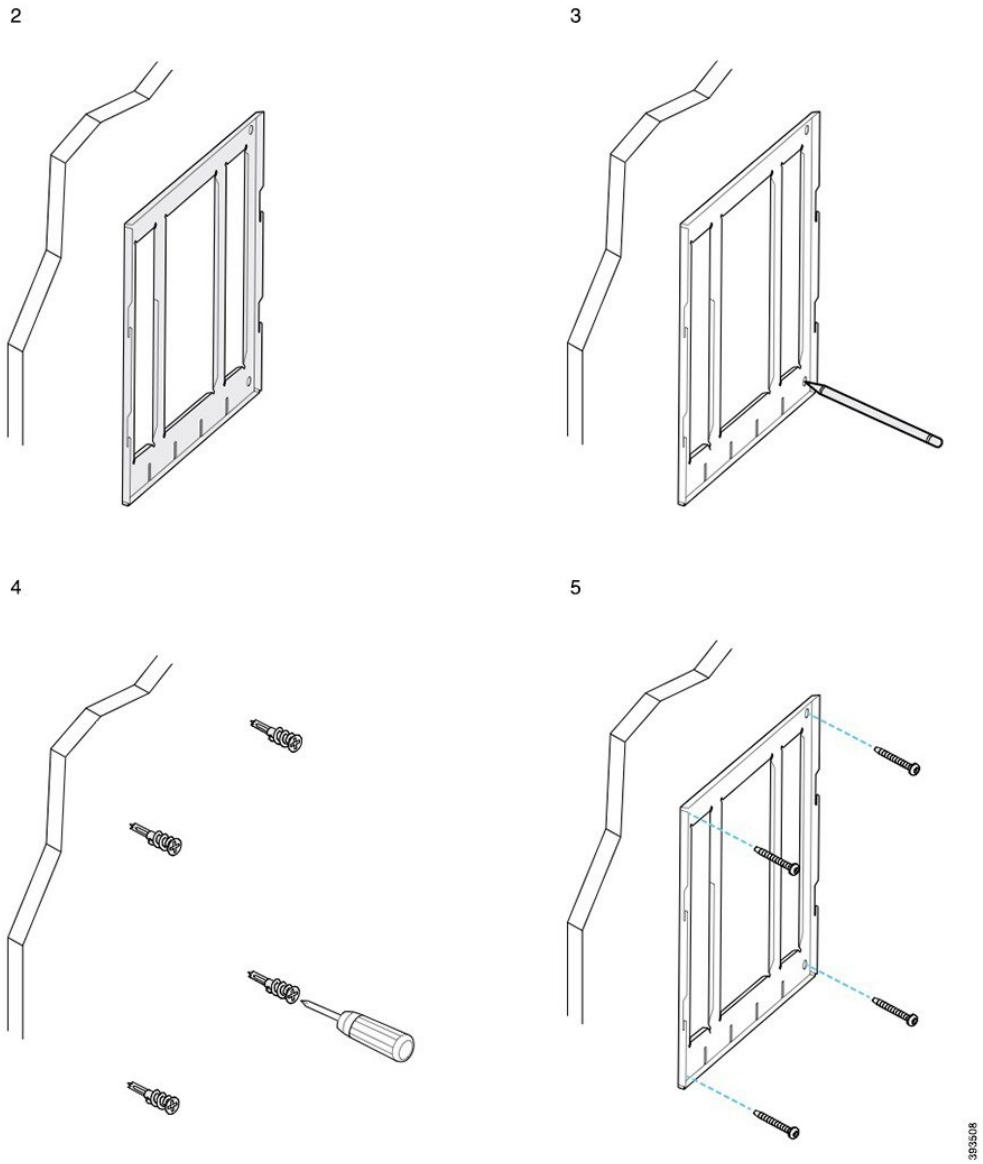

Attach the Phone Bracket to the Phone

Before you attach a phone to the wall, you attach the phone bracket to the phone. The phone bracket attaches the phone to the wall bracket, and it bears the weight of the phone. Ensure that the phone bracket is attached securely to your phone. Because each phone is slightly different, refer to the appropriate example to guide you.

Before you begin

Obtain a #1 Phillips-head screwdriver.

Procedure

Step 1 Keep the handset cord or headset cords attached, but remove any other cords from the phone base.

Step 2 Attach the phone bracket to the phone. Insert the tabs on the bracket into the mounting tabs on the back of the phone.

Step 3 Use the #1 Phillips-head screwdriver to secure the phone bracket to the phone with the self-tapping or the machine screws.

Examples of a Phone Bracket Attached to a Phone

The following diagram illustrates how to attach a Cisco IP Phone 7800 and 8800 series phone to a phone bracket.

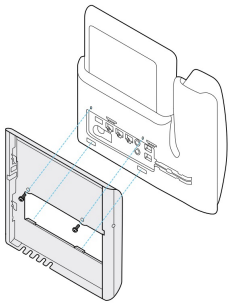

The following diagram illustrates how to attach a Cisco IP Phone 8845 and 8865 to a phone bracket.

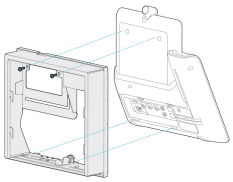

The following diagram illustrates how to attach a phone bracket to a Cisco IP Phone 8800 series phone equipped with a key expansion module.

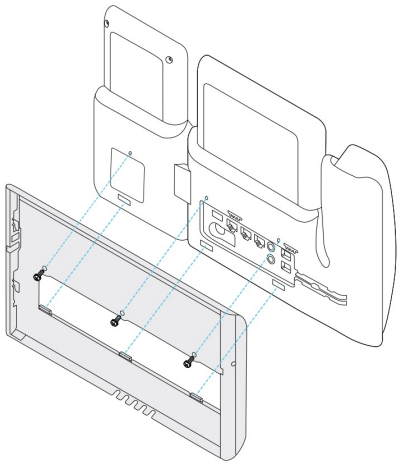

Attach the Cables to the Phone

Attach the phone cables to your phone before you mount the phone to the wall.

Procedure

Step 1 Attach the Ethernet cable to the 10/100/1000 SW network port and to the wall jack.

Step 2 (Optional) Attach the cable to the 10/100/1000 computer (PC access) port.

Step 3 (Optional) Plug the power cord into the phone and seat the cord in the clips next to the PC port.

Step 4 (Optional) If the cables terminate inside the wall bracket, connect the cables to the jacks.

Attach the Phone to the Wall Bracket

After you have installed your wall bracket on the wall, you attach your phone - with the phone bracket to it - to the wall bracket. Ensure that the phone fits securely into the wall bracket. Because each phone is slightly different, refer to the appropriate example to guide you.

Procedure

Step 1 Insert the tabs on the top of the wall bracket into the slots on the phone bracket.

Cables that terminate outside of the brackets can be positioned in the openings on the bracket bottom, with one cable per opening.

Step 2 Press the phone firmly into the wall bracket and slide the phone down. The tabs in the bracket click into position.

Examples of a Cisco IP Phone Attached to the Wall Bracket

The following diagram illustrates how to attach a Cisco IP Phone 7800 and 8800 series to your wall bracket.

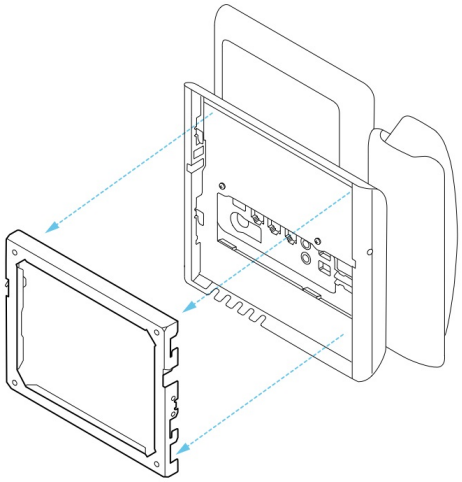

The following diagram illustrates how to attach a Cisco IP Phone 8845 and 8865 to your wall bracket.

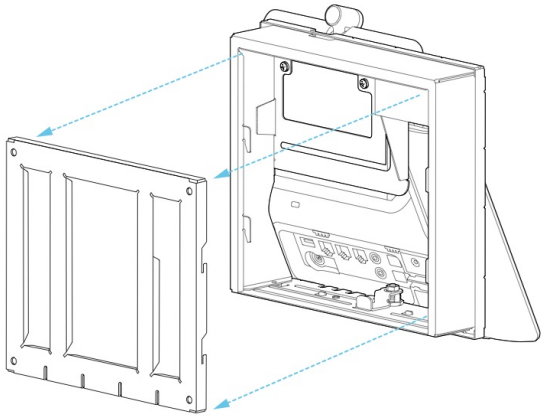

The following diagram illustrates how to attach a Cisco IP Phone 8800 series with a key expansion module to your wall bracket.

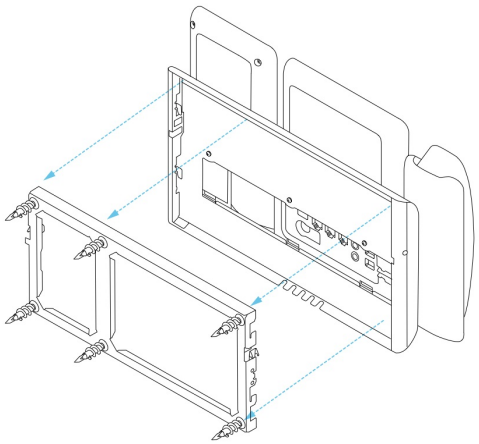

Remove the Phone from the Wall Mount Kit

The wall bracket has two tabs that lock the bracket to the phone mounting plate. These tabs must be released before you can remove the phone from the wall mount kit. Because each phone is slightly different, refer to the appropriate example to guide you.

Before you begin

Obtain two Phillips head screwdrivers or other similar devices that have a diameter of 5 millimeters or 3/16 inch.

Procedure

Step 1 Insert a screw driver or other device into the left and right holes in the phone mounting plate. Insert to a depth of about 3/4 inch or 2 centimeters.

Step 2 Press inwards firmly to disengage the tabs.

Step 3 Lift the phone to release it from the wall bracket and pull the phone toward you.

Examples of Disengaging the Locking Tabs

The following diagram illustrates how to disengage the locking tabs on the Cisco IP Phone 7800 and 8800 series.

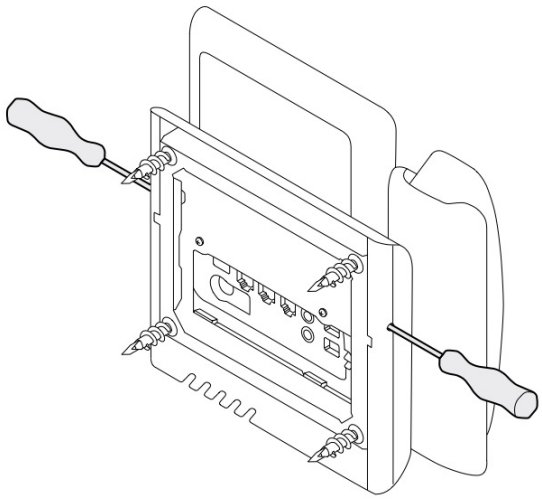

The following diagram shows how to disengage the locking tabs on the Cisco IP Phone 8800 series with a key expansion module attached.

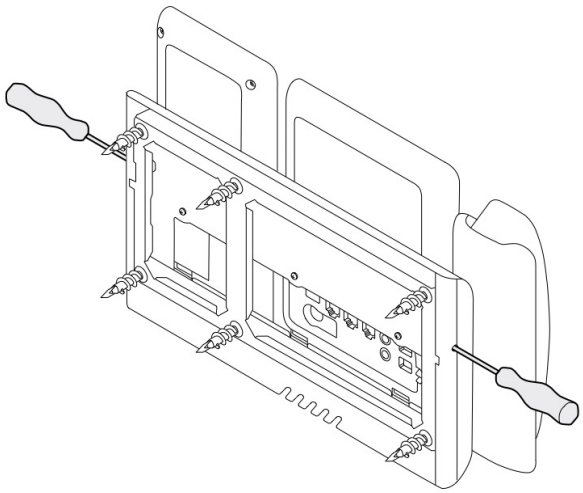

Adjust the Handset Rest on Your Phone

Each Cisco IP Phone comes with a small removeable tab located in the phone cradle. This tab determines how the phone handset sits in the cradle. If your phone is wall mounted or if the handset slips out of the cradle too easily, you may need to adjust how the handset rests on this tab.

Before you begin

Obtain a coin or other similar object with a thickness of about 1.75 mm or 0.069 inch.

Procedure

Step 1 Remove the handset from the cradle. Place the edge of the coin in the space between the handset rest and the plastic tab. Remove the tab by quickly rotating the coin counterclockwise.

Step 2 Rotate the tab 180 degrees so the ridge points toward you and the smooth back faces down.

Step 3 Hold the tab between two fingers, with the corner notches facing you.

Step 4 Line up the tab with the slot in the cradle and press the tab evenly into the slot. An extension protrudes from the top of the rotated tab.

Step 5 Return the handset to the handset rest.

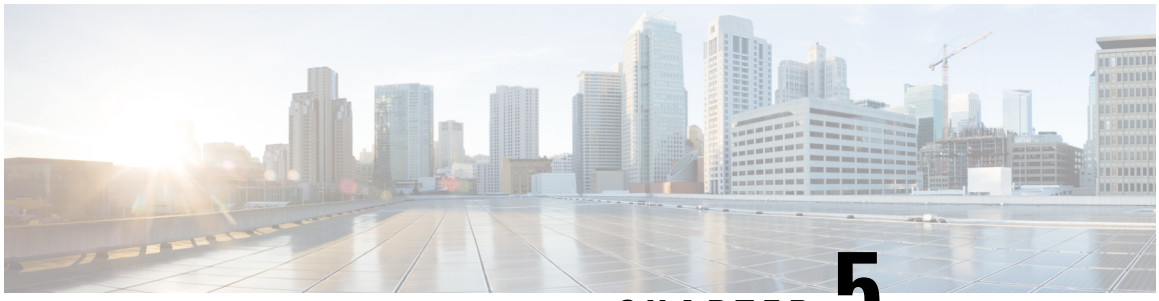

CHAPTER 5

Other Accessories

- Silicone Covers, on page 81
- Connect the Footstand, on page 84
- Secure the Phone with a Cable Lock, on page 85
- External Speakers and Microphone, on page 85

Silicone Covers

You can use the Cisco IP Phone Silicone Cover to protect your desk phone and handset.

The case offers the following benefits:

- Hypoallergenic
- Resistant to wear from a variety of cleaning agents.

Note Use a low-strength cleaning agent to prolong the life and look of the case.

- Reduces damage when the handset is dropped.

For part numbers and other additional information, refer to the phone model data sheet. The Cisco IP Phone 8800 Series data sheets can be found here https://www.cisco.com/c/en/us/products/collaboration-endpoints/unified-ip-phone-8800-series/datasheet-listing.html. The Cisco IP Phone 7800 Series data sheets can be found here https://www.cisco.com/c/en/us/products/collaboration-endpoints/unified-ip-phone-7800-series/datasheet-listing.html.

To check which phone model you have, press **Applications** and select **Phone information**. The **Model number** field shows your phone model.

Table 24: Silicone Covers

Cisco IP Phone	Cisco IP Phone Silicone Cover	Notes
Cisco IP Phone 7821	• 10 pack of Silicone Covers for 7821 Desktop Phone Series (CP-7821-COVER=) • 10 pack of Silicone Covers for 7821 Desktop Phone Series and Handset (CP-7821-COVER-BUN=)	
Cisco IP Phone 7841	• 10 pack of Silicone Covers for 7841 Desktop Phone Series (CP-7841-COVER=) • 10 pack of Silicone Covers for 7841 Desktop Phone Series and Handset (CP-7841-COVER-BUN=)	
Cisco IP Phone 8811, 8841, 8851, 8851NR, 8861, and 8861NR	• 10 pack of Silicone Covers for 88X1 Desktop Phone Series (CP-88X1-COVER=) • 10 pack of Silicone Covers for 88X1 Desktop Phone Series and Handset (CP-88X1-COVER-BUN=)	**Note** The silicone cover doesn't protect the Key Expansion Module.
Cisco IP Phone 8845, 8865, and 8865NR	• 10 pack of Silicone Covers for 88X5 Desktop Phone Series (CP-88X5-COVER=) • 10 pack of Silicone Covers for 88X5 Desktop Phone Series and Handset (CP-88X5-COVER-BUN=)	**Note** The silicone cover doesn't protect the Key Expansion Module.
Cisco IP Phone Handset	• 10 pack of Silicone Covers for Desktop Phone Handsets (CP-HS-COVER=)	

Install the Cisco IP Phone Silicone Cover

The silicone cover helps prolong the life of your Cisco IP Phone and make it easier to keep the buttons and number pad clean.

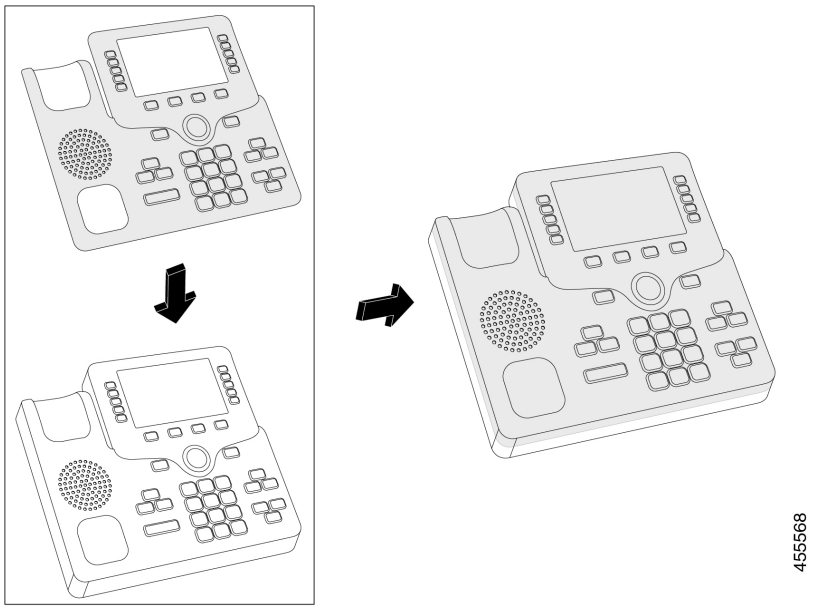

Procedure

Step 1 Position the phone facing you.

Step 2 Remove the handset from the cradle.

Step 3 Align the cover over the phone with the handset on the left.

Step 4 Secure the cover around the corners and side of the phone. The cover should fit securely over the phone without much resistance.

Step 5 Place the handset back on the cradle.

Install the Cisco IP Phone Handset Cover

A silicone cover helps to protect your handset from damage and reduces the spread of germs.

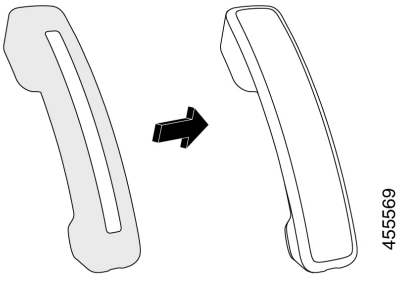

Procedure

Step 1 Remove the handset from the phone cradle.

Step 2 Disconnect the cable from the handset.

Step 3 Slide the silicone cover over the handset until the ear cup is completely inside the cover.

Step 4 Pull the cover over the other end of the handset.

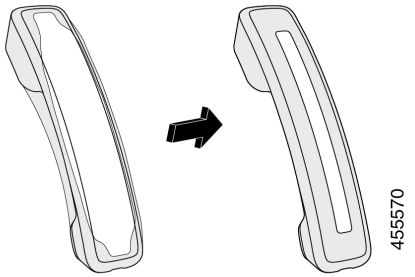

Step 5 Make sure the cover is flush against the handset and that the cable port is unobstructed.

Step 6 Reconnect the handset to the phone and return it to the cradle.

Clean the Silicone Cover

Clean your cover if you are worried about dirt and grime. A regular cleaning also prevents the spread of bacteria or germs.

Procedure

Step 1 Remove the silicone cover.

Step 2 Clean the cover.

Note Use a low-strength cleaning agent to prolong the life and look of the case.

Step 3 Dry the cover thoroughly. Don't put it back on the phone until it is completely dry.

Step 4 Put the cover back on the phone.

Connect the Footstand

If your phone is placed on a table or desk, connect the footstand to the back of the phone.

Procedure

Step 1 Insert the connectors into the slots.
Step 2 Press the footstand until the connectors snap into place.
Step 3 Adjust the angle of the phone.

Related Topics

Accessory Support, on page 1

Secure the Phone with a Cable Lock

You can secure your Cisco IP Phone 8800 Series with a laptop cable lock up to 20 mm wide.

Procedure

Step 1 Take the looped end of the cable lock and wrap it around the object to which you want to secure your phone.
Step 2 Pass the lock through the looped end of the cable.
Step 3 Unlock the cable lock.
Step 4 Press and hold the locking button to align the locking teeth.
Step 5 Insert the cable lock into the lock slot of your phone and release the locking button.
Step 6 Lock the cable lock.

Related Topics

Accessory Support, on page 1

External Speakers and Microphone

External speakers and microphones are plug-and-play accessories. You can connect an external PC-type microphone and powered speakers (with amplifier) on the Cisco IP Phone by using the line in/out jacks. Connecting an external microphone disables the internal microphone and connecting an external speaker disables the internal phone speaker.

Note Using poor quality external audio devices, playing loudspeakers at very loud volumes, or placing the microphone very close to the loudspeaker may result in undesirable echo for other parties on your speakerphone calls.

Related Topics

Accessory Support, on page 1

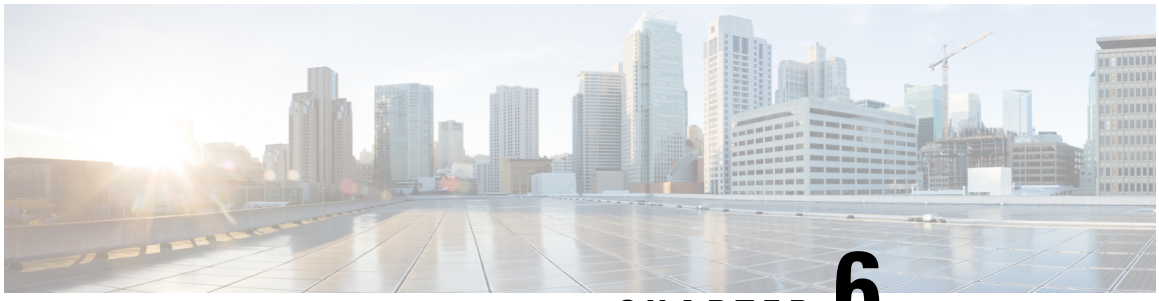

CHAPTER 6

Product Safety and Security

- Compliance Statements, on page 87
- Cisco Product Security Overview, on page 88
- Important Online Information, on page 89

Compliance Statements

Compliance Statements for the European Union

CE Marking

The following CE mark is affixed to the equipment and packaging.



Compliance Statements for Canada

This device complies with Industry Canada license-exempt RSS standard(s). Operation is subject to the following two conditions: (1) this device may not cause interference, and (2) this device must accept any interference, including interference that may cause undesired operation of the device. Privacy of communications may not be ensured when using this phone.

This product meets the applicable Innovation, Science and Economic Development Canada technical specifications.

Avis de Conformité Canadien

Cet appareil est conforme aux normes RSS exemptes de licence RSS d'Industry Canada. Le fonctionnement de cet appareil est soumis à deux conditions : (1) ce périphérique ne doit pas causer d'interférence et (2) ce périphérique doit supporter les interférences, y compris celles susceptibles d'entraîner un fonctionnement non souhaitable de l'appareil. La protection des communications ne peut pas être assurée lors de l'utilisation de ce téléphone.

Le présent produit est conforme aux spécifications techniques applicables d'Innovation, Sciences et Développement économique Canada.

FCC Compliance Statements

The Federal Communications Commission requires compliance statements for the following:

FCC Part 15.21 Statement

Changes or modifications not expressly approved by the party responsible for compliance could void the user's authority to operate the equipment.

FCC RF Radiation Exposure Statement

This equipment complies with FCC radiation exposure limits set forth for an uncontrolled environment. End users must follow the specific operating instructions for satisfying RF exposure compliance. This transmitter must be at least 20 cm from the user and must not be collocated or operating in conjunction with any other antenna or transmitter.

FCC Receivers and Class B Digital Statement

This product has been tested and complies with the specifications for a Class B digital device, pursuant to Part 15 of the FCC Rules. These limits are designed to provide reasonable protection against harmful interference in a residential installation. This equipment generates, uses, and can radiate radio frequency energy and, if not installed and used according to the instructions, may cause harmful interference to radio communications. However, there is no guarantee that interference will not occur in a particular installation.

If this equipment does cause harmful interference to radio or television reception, which is found by turning the equipment off and on, the user is encouraged to try to correct the interference by one or more of the following measures:

- Reorient or relocate the receiving antenna
- Increase the separation between the equipment or devices
- Connect the equipment to an outlet other than the receiver's
- Consult a dealer or an experienced radio/TV technician for assistance

Cisco Product Security Overview

This product contains cryptographic features and is subject to U.S. and local country laws that govern import, export, transfer, and use. Delivery of Cisco cryptographic products does not imply third-party authority to import, export, distribute, or use encryption. Importers, exporters, distributors, and users are responsible for compliance with U.S. and local country laws. By using this product, you agree to comply with applicable laws and regulations. If you are unable to comply with U.S. and local laws, return this product immediately.

Further information regarding U.S. export regulations can be found at https://www.bis.doc.gov/policiesandregulations/ear/index.htm.

Important Online Information

End User License Agreement

The End User License Agreement (EULA) is located here: https://www.cisco.com/go/eula

Regulatory Compliance and Safety Information

Regulatory Compliance and Safety Information (RCSI) is located here: